Priority Development Project (PDP) Storm Water Quality Management Plan (SWQMP)

Southwest Village Vesting Tentative Map (VTM)

614791

[Insert Drawing Number (if applicable) and Internal Order Number (if applicable)]

☐ **Check if electing for offsite alternative compliance**

Engineer of Work:

Brendan Hastie, RCE # 65809, Exp. 9/23

Provide Wet Signature and Stamp Above Line

Prepared For:

Tri Pointe Homes

13400 Sabre Springs Parkway, Suite 200

San Diego, California 92128

(858) 794-2500

Prepared By:

Rick Engineering Company

5620 Friars Road

San Diego, California 92110

(619) 291-0707

Date:

April 28, 2023

Approved by: City of San Diego Date

THIS PAGE INTENTIONALLY LEFT BLANK FOR DOUBLE-SIDED PRINTING

Table of Contents

- Attachment 3: Structural BMP Maintenance Plan
    - Maintenance Agreement (Form DS-3247) (when applicable)
- Attachment 4: Copy of Plan Sheets Showing Permanent Storm Water BMPs
- Attachment 5: Project's Drainage Report
- Attachment 6: Project's Geotechnical and Groundwater Investigation Report

Acronyms

APN	Assessor's Parcel Number
ASBS	Area of Special Biological Significance
BMP	Best Management Practice
CEQA	California Environmental Quality Act
CGP	Construction General Permit
DCV	Design Capture Volume
DMA	Drainage Management Areas
ESA	Environmentally Sensitive Area
GLU	Geomorphic Landscape Unit
GW	Ground Water
HMP	Hydromodification Management Plan
HSG	Hydrologic Soil Group
HU	Harvest and Use
INF	Infiltration
LID	Low Impact Development
LUP	Linear Underground/Overhead Projects
MS4	Municipal Separate Storm Sewer System
N/A	Not Applicable
NPDES	National Pollutant Discharge Elimination System
NRCS	Natural Resources Conservation Service
PDP	Priority Development Project
PE	Professional Engineer
POC	Pollutant of Concern
SC	Source Control
SD	Site Design
SDRWQCB	San Diego Regional Water Quality Control Board
SIC	Standard Industrial Classification
SWPPP	Stormwater Pollutant Protection Plan
SWQMP	Storm Water Quality Management Plan
TMDL	Total Maximum Daily Load
WMAA	Watershed Management Area Analysis
WPCP	Water Pollution Control Program
WQIP	Water Quality Improvement Plan

SOUTHWEST VILLAGE PDP SWQMP

REVISION PAGE
April 28, 2023

The following comments have been provided by the City of San Diego on March 3, 2023, and updates have been made to the three reports associated with these comments all dated December 15th, 2022. The three reports include, the “Conceptual Drainage and Water Quality Summary for Southwest Village Specific Plan”, the “Drainage Study for Southwest Village Vesting Tentative Map (VTM)”, and the “Priority Development Project (PDP) Storm Water Quality Management Plan (SWQMP) for Southwest Village Vesting Tentative Map (VTM)”, all dated April 28, 2023. A meeting was held on November 10th, 2022, with the City of San Diego to review the comments previously provided and to develop concurrence on what should be addressed with the Vesting Tentative Map (VTM) submittal and what can be addressed with final engineering. Many of the comments received on March 3, 2023, are repeat comments that were previously discussed with the City and an approach agreed to. Below are the comments provided by the City of San Diego that are related to the Specific Plan with responses from Rick Engineering Company in bold.

Specific Plan / VTM Drainage Study / VTM PDP SWQMP

95. Prior to the issuance of any building permit, the owner/Permittee shall incorporate any construction Best Management Practices necessary to comply with Chapter 14, Article 2, Division 1 (Grading Regulations) of the Municipal Code, into the construction plans or specifications. (From Cycle 15)

Best Management Practices (BMPs) have been identified throughout the site to treat the proposed development. The BMPs for the VTM areas (Basin 100, 200, 300, and 1400) are shown on the civil plan sheets and approximate locations for the Specific Plan areas are also identified in the Conceptual Water Quality and HMP Exhibit that is apart of Map Pocket 3 of this report.

96. Prior to the issuance of any building permit, the Owner/Permittee shall submit a Technical Report that will be subject to final review and approval by the city engineer, based on the Storm Water Standards in effect at the time of the construction permit issuance. (From Cycle 15)

Comment noted. As the Specific Plan areas move towards preliminary engineering, technical reports will be developed for review and approval by the City Engineering staff that will comply with the Storm Water Standard in effect at that time.

97. Prior to the issuance of any building permit, the Owner/Permittee must enter into a Storm Water Management and Discharge Control Maintenance Agreement, which will be recorded in the property records of the county, satisfactory to the City Engineer. (From Cycle 15)

A draft Storm Water Management and Discharge Control Maintenance Agreement (SWMDCMA) has been included in attachment 3 of the PDPSWQMP document and will be recorded during the Final Engineering phase of this project.

98. Prior to the issuance of any building permit, the Owner/Permittee shall enter into a Maintenance Agreement for the ongoing permanent BMP maintenance, satisfactory to the City Engineer. (From Cycle 15)

A draft Maintenance Agreements has been included in attachment 3 of the PDPSWQMP document and will be recorded during the Final Engineering phase of this project.

102. The drainage system proposed for this development, as shown on the site plan, is subject to approval by the City Engineer. (From Cycle 15)

The project engineers have met with City staff extensively on this project and most recently on November 10th, 2022 to discuss the drainage system for this project and explain the complexities that are introduced with the landslide area directly to the west of Basin 300.

104. Development of this project shall comply with all storm water construction requirements of the State Construction General Permit, Order No. 2009-0009-DWQ, or subsequent order, and the Municipal Storm Water Permit, Order No. R9-2013-0001, or subsequent order. In accordance with Order No. 2009-0009DWQ, or subsequent order, a Risk Level Determination shall be calculated for the site and a Storm Water Pollution Prevention Plan (SWPPP) shall be implemented concurrently with the commencement of grading activities. (From Cycle 15)

The project will be in compliance with the State Construction General Permit, Order No. 2009-0009-DWQ, or subsequent order, and the Municipal Storm Water Permit, Order No. R9-2013-0001, or subsequent order including a SWPPP and a Risk Level Determination, which will be completed during the Final Engineering phase of this project.

105. Prior to issuance of a grading or a construction permit, a copy of the Notice of Intent (NOI) with a valid Waste Discharge ID number (WDID#) shall be submitted to the City of San Diego as a proof of enrollment under the Construction General Permit. When ownership of the entire site or portions of the site changes prior to filing of the Notice of Termination (NOT), a revised NOI shall be submitted electronically to the State Water Resources Board in accordance with the provisions as set forth in Section II.C of Order No. 2009-0009-DWQ and a copy shall be submitted to the City. (From Cycle 15)

The project will prepare and NOI with a valid WDID number as proof of enrollment under the CGP and will be prepared during the Final Engineering phase of the project.

106. The Subdivider shall enter into an agreement to indemnify, protect, and hold harmless the City, its officials and employees from any and all claims, demands, causes or action, liability or loss because of, or arising out of surface drainage entering into the property from the Right-of-Way due to the current drainage/ storm water design. (From Cycle 15)

In the locations where public storm drain systems cross into private lots, EMRAs will be provided so that the City will be able to maintain the public system. A hold harmless agreement can also be prepared and entered into with the City of San Diego.

139. The Subdivider shall demonstrate that mitigated peak flow rates for the 5, 10, 25, 50 and 100-year design storms do not exceed pre-project runoff rates at each outfall location. The pre-project runoff rate limit at each storm drain outfall should coincide with existing conditions, before any development has commenced in the Specific Plan, and not a future phased condition. (New Issue)

This has been previously addressed with the City of San Diego. The City of San Diego will be responsible for reviewing hydrologic and hydraulic studies and design features for conformance to criteria given in the "Drainage Design Manual" for every map or permit for which discretionary approval is sought from the City of San Diego. These project specific studies for each development will need to address potential impacts to downstream storm drainage facilities with sufficient detail to support the discretionary action. In addition, the new development projects will need to be able to demonstrate that the 50-year and 100-year detention requirements have been addressed (in order to satisfy the design criteria of the CPU Drainage Study). Additionally, the drainage area flowing into Mexico at the Spring Canyon concentration point and will need to comply with the US/Mexico International flood control detention requirements (i.e. – 5, 10, 25, 50, & 100-year storm events).

140. The Subdivider shall fully document all diversions of drainage area between the main watershed areas of the site. (New Issue)

This has been previously coordinated with the City of San Diego and in both the Drainage Study as well as the PDPSWQMP diversion maps are provided showing the area that is being diverted to Moody Canyon and Spring Canyon. It should also be noted that detention and hydromodification management are provided at each POC.

141. The Subdivider shall utilize Conjunctive Use guidelines for detention basin modeling of all mixed-use detention basins. (New Issue)

The guidelines for conjunctive use have been used when preparing the detention modeling for the VTM areas. Please see Appendix F of the Drainage Study.

142. The Subdivider shall demonstrate all proposed drainage basins have access and fencing provided to meet City criteria. (New Issue)

The proposed BMPs for the VTM area as shown in the PDPSWQMP are a combination of underground storage and compact biofiltration. Basin 1400 has an above ground biofiltration basin at the end of Beyer Road. This basin has an access road as shown on the plan sheets. Fencing guidelines have been followed per the City of San Diego City criteria.

143. The Subdivider shall provide a hydraulic analysis downstream at each storm drain outfall in the Spring, Moody, and Dillon Creek watersheds demonstrating proposed condition floodplain limits and channel velocities. (New Issue)

This has been previously coordinated with the City on the November 10th, 2022 meeting. Approximate floodplain limits have been provided for Moody Canyon, and the backup has been provided in the report titled, "Drainage Study for Southwest Village Vesting Tentative Map (VTM)" dated April 28, 2023. Please refer to Appendix I for additional information and to the exhibit in Map Pocket 2 for the mark up of the approximate floodplain limits. Once the areas tributary to Dillion Canyon are developed additional analysis can be done. If Spring Canyon were to be considered, a watershed wide approach would be necessary to accurately map the floodplain, including in-depth hydraulic analysis of the culvert that crosses from the US into Mexico.

144. The Subdivider shall provide a hydraulic analysis downstream at each storm drain outfall involving a diversion of drainage area or an increase in any of the analyzed peak flows as compared to pre-project conditions. (New Issue)

All project areas, including those where diversion occurs, is subject to both detention and hydromodification requirements. The new development projects will need to be able to demonstrate that the 50-year and 100-year detention requirements have been addressed (in order to satisfy the design criteria of the CPU Drainage Study). Additionally, the drainage area flowing into Mexico at the Spring Canyon concentration point and will need to comply with the US/Mexico International flood control detention requirements (i.e. – 5, 10, 25, 50, & 100-year storm events). With these requirements in place the post-project peak flows are anticipated to be less than or equal to the pre-project flows.

145. The Subdivider shall provide detailed energy dissipation analysis at each storm drain outfall to ensure proper receiving water protection from discharges of the 100-year design storm. (New Issue)

This comment has been previously coordinated with the City of San Diego. Outfalls from the VTM area Basin 100 and Basin 200 will be directed through an SDD-105 and Basin 300 will be directed down Beyer Road to a biofiltration basin located adjacent to Beyer Park. Additional analysis for other project areas will be considered as those pads are developed in the Specific Plan area and additional analysis will be performed in final engineering for each of the VTM outfalls.

146. The Subdivider shall provide detailed pre-treatment facilities prior to the proposed treatment control and hydromodification control BMPs and provide overflow structures for the 100-year flow and screening mechanism to prevent clogging of the low flow orifices in HMP facilities. (New Issue)

Please refer to the PDPSWQMP where pre-treatment devices have been called out for the basins associated with the VTM areas. Additional analysis for other project areas will be considered as those pads are developed in the Specific Plan area.

147. The Subdivider shall demonstrate compliance with the regional Critical Coarse Sediment Yield Area requirements. (New Issue)

This has been previously coordinated with the City of San Diego during the November 10th, 2022 meeting and it was agreed upon that this will be conditioned for the Final Engineering phase of the report.

148. The Subdivider shall provide a full review of the Channel Screening Analysis prior to final approval and selection of low flow thresholds for the hmp analysis. (New Issue)

In both the Specific Plan and in the PDPSWQMP geomorphic channel assessments have been provided for the locations where the low-flow threshold is proposed to be greater than 0.1Q2 (Outfall 9 to Spring Canyon and downstream from Outfall 16 have been evaluated for 0.5Q2). This has been coordinated with the City of San Diego on the November 10th, 2022 meeting.

149. The Draft TM Conditions have been revised to include drainage conditions determined by the Deputy City Engineer. Please review all draft conditions. (New Issue)

Comment noted. Draft conditions have been reviewed.

150. Detail proposed safety measures for the reaches of extreme depth storm drain shown on the plans. Such extreme storm drain depths will require review and acceptance by the Storm water O&M group prior to final approval. (New Issue)

Comment noted. Due to the site constraints, including the landslide area to the west of the project, long runs of storm drain is required to convey flows from throughout the basin area.

Certification Page

Project Name:
Permit Application

I hereby declare that I am the Engineer in Responsible Charge of design of storm water BMPs for this project, and that I have exercised responsible charge over the design of the project as defined in Section 6703 of the Business and Professions Code, and that the design is consistent with the requirements of the Storm Water Standards, which is based on the requirements of SDRWQCB Order No. R9-2013-0001 as amended by R9-2015-0001 and R9-2015-0100 (MS4 Permit).

I have read and understand that the City Engineer has adopted minimum requirements for managing urban runoff, including storm water, from land development activities, as described in the Storm Water Standards. I certify that this PDP SWQMP has been completed to the best of my ability and accurately reflects the project being proposed and the applicable source control and site design BMPs proposed to minimize the potentially negative impacts of this project's land development activities on water quality. I understand and acknowledge that the plan check review of this PDP SWQMP by the City Engineer is confined to a review and does not relieve me, as the Engineer in Responsible Charge of design of storm water BMPs for this project, of my responsibilities for project design.

Engineer of Work's Signature

65809
PE#

9/23
Expiration Date

Brendan Hastie
Print Name

Rick Engineering Company
Company

Date

Engineer's Stamp

Project Name: Southwest Village Vesting Tentative Map (VTM)

Submittal Record

Use this Table to keep a record of submittals of this PDP SWQMP. Each time the PDP SWQMP is re-submitted, provide the date and status of the project. In last column indicate changes that have been made or indicate if response to plancheck comments is included. When applicable, insert response to plancheck comments.

Submittal Number	Date	Project Status	Changes
1	03/29/2019	☑ **Preliminary Design/Planning/CEQA** ☐ **Final Design**	**Initial Submittal**
2	10/25/2019	☑ **Preliminary Design/Planning/CEQA** ☐ **Final Design**	2nd Submittal; updates to site layout
3	7/16/2020	☑ **Preliminary Design/Planning/CEQA** ☐ **Final Design**	3rd Submittal; updates to site layout
4	7/15/2022	☑ **Preliminary Design/Planning/CEQA** ☐ **Final Design**	4th Submittal; Updates to site layout.
	12/15/2022	☑ **Preliminary Design/Planning/CEQA** ☐ **Final Design**	5th Submittal; response to City comment, no major site changes
	4/28/2023	☑ **Preliminary Design/Planning/CEQA** ☐ **Final Design**	6th Submittal; response to City comment, no major site changes

Project Vicinity Map

Project Name: Southwest Village Vesting Tentative Map (VTM)
Permit Application 614791

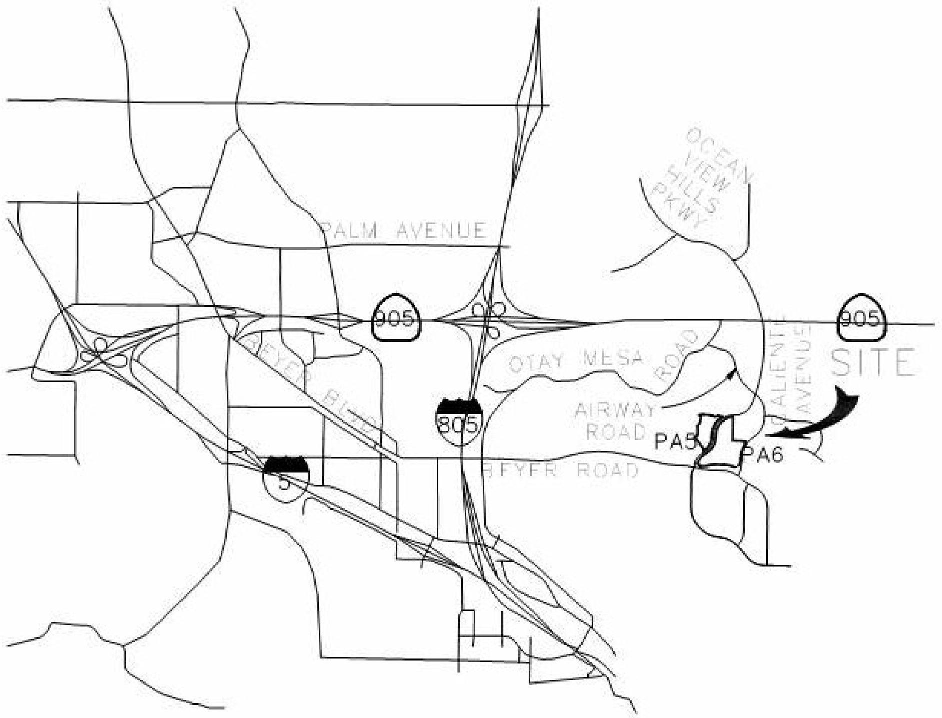

VICINITY MAP

NOT TO SCALE

City of San Diego Form DS-560 Storm Water Requirements Applicability Checklist

Attach DS-560 form.

FORM
DS-560
September 2021

Stormwater Requirements Applicability Checklist

Project Address: Beyer Blvd. & Enright Dr. **Project Number:** 614791

SECTION 1: Construction Stormwater Best Management Practices (BMP) Requirements

All construction sites are required to implement construction BMPs per the performance standards in the Stormwater Standards Manual. Some sites are also required to obtain coverage under the State Construction General Permit (CGP)[1], administered by the California State Water Resources Control Board.

For all projects, complete Part A - If the project is required to submit a Stormwater Pollution Prevention Plan (SWPPP) or Water Pollution Control Plan (WPCP), continue to Part B.

PART A – Determine Construction Phase Stormwater Requirements

1. Is the project subject to California's statewide General National Pollutant Discharge Elimination System (NPDES) permit for Stormwater Discharges Associated with Construction Activities, also known as the State Construction General Permit (CGP)? (Typically projects with land disturbance greater than or equal to 1 acre.)

   ● Yes, SWPPP is required; skip questions 2-4. ○ No; proceed to the next question.

2. Does the project propose construction or demolition activity, including but not limited to, clearing, grading, grubbing, excavation, or any other activity resulting in ground disturbance and/or contact with stormwater?

   ○ Yes, WPCP is required; skip questions 3-4. ○ No; proceed to the next question.

3. Does the project propose routine maintenance to maintain the original line and grade, hydraulic capacity, or original purpose of the facility? (Projects such as pipeline/utility replacement)

   ○ Yes, WPCP is required; skip question 4. ○ No; proceed to the next question.

4. Does the project only include the following Permit types listed below?

   - Electrical Permit, Fire Alarm Permit, Fire Sprinkler Permit, Plumbing Permit, Sign Permit, Mechanical Permit, Spa Permit.
   - Individual Right of Way Permits that exclusively include only ONE of the following activities: water service, sewer lateral, or utility service.
   - Right of Way Permits with a project footprint less than 150 linear feet that exclusively include only ONE of the following activities: curb ramp, sidewalk and driveway apron replacement, potholing, curb and gutter replacement, and retaining wall encroachments.

   ☐ Yes, no document is required.

Check one of the boxes below and continue to Part B

● **If you checked "Yes" for question 1**, an SWPPP is REQUIRED – **continue to Part B**

○ **If you checked "No" for question 1 and checked "Yes" for question 2 or 3**, a WPCP is REQUIRED. If the project proposes less than 5,000 square feet of ground disturbance AND has less than a 5-foot elevation change over the entire project area, a Minor WPCP may be required instead. **Continue to Part B**

○ **If you check "No" for all questions 1-3 and checked "Yes" for question 4,** Part B does not apply, and no document is required. **Continue to Section 2.**

---

[1] More information on the City's construction BMP requirements as well as CGP requirements can be found at http://www.sandiego.gov/stormwater/regulations/index.shtml

PART B – Determine Construction Site Priority

This prioritization must be completed within this form, noted on the plans, and included in the SWPPP or WPCP. The city reserves the right to adjust the priority of projects both before and after construction. Construction projects are assigned an inspection frequency based on if the project has a "high threat to water quality." The City has aligned the local definition of "high threat to water quality" to the risk determination approach of the State Construction General Permit (CGP). The CGP determines risk level based on project specific sediment risk and receiving water risk. Additional inspection is required for projects within the Areas of Special Biological Significance (ASBS) watershed. **NOTE:** The construction priority does **NOT** change construction BMP requirements that apply to projects; rather, it determines the frequency of inspections that will be conducted by city staff.

Complete Part B and continue to Section 2

☐ **1. ASBS**

A. Projects located in the ASBS watershed.

☑ **2. High Priority**

A. Projects that qualify as Risk Level 2 or Risk Level 3 per the Construction General Permit (CGP) and are not located in the ASBS watershed.
B. Projects that qualify as LUP Type 2 or LUP Type 3 per the CGP and are not located in the ASBS watershed.

☐ **3. Medium Priority**

A. Projects that are not located in an ASBS watershed or designated as a High priority site.
B. Projects that qualify as Risk Level 1 or LUP Type 1 per the CGP and are not located in an ASBS watershed.
C. WPCP projects (>5,000 square feet of ground disturbance) located within the Los Peñasquitos watershed management area.

☐ **4. Low Priority**

A. Projects not subject to a Medium or High site priority designation and are not located in an ASBS watershed.

Section 2: Construction Stormwater BMP Requirements

Additional information for determining the requirements is found in the Stormwater Standards Manual.

PART C – Determine if Not Subject to Permanent Stormwater Requirements

Projects that are considered maintenance or otherwise not categorized as "new development projects" or "redevelopment projects" according to the Stormwater Standards Manual are not subject to Permanent Stormwater BMPs.

- **If "yes" is checked for any number in Part C**: Proceed to Part F and check "Not Subject to Permanent Stormwater BMP Requirements."
- **If "no" is checked for all the numbers in Part C:** Continue to Part D.

1. Does the project only include interior remodels and/or is the project entirely within an existing enclosed structure and does not have the potential to contact stormwater?

○ Yes ● No

2. Does the project only include the construction of overhead or underground utilities without creating new impervious surfaces?

○ Yes ● No

3. Does the project fall under routine maintenance? Examples include but are not limited to roof or exterior structure surface replacement, resurfacing or reconfiguring surface parking lots or existing roadways without expanding the impervious footprint, and routine replacement of damaged pavement (grinding, overlay and pothole repair).

○ Yes ● No

PART D – PDP Exempt Requirements

PDP Exempt projects are required to implement site design and source control BMPs.

- **If "yes" is checked for any questions in Part D**, continue to Part F and check the box labeled "PDP Exempt."
- **If "no" is checked for all questions in Part D**, continue to Part E.

1. Does the project ONLY include new or retrofit sidewalks, bicycle lanes, or trails that:
   - Are designed and constructed to direct stormwater runoff to adjacent vegetated areas, or other non-erodible permeable areas? Or;
   - Are designed and constructed to be hydraulically disconnected from paved streets and roads? Or;
   - Are designed and constructed with permeable pavements or surfaces in accordance with the Green Streets guidance in the City's Stormwater Standards manual?

   ○ Yes, PDP exempt requirements apply ● No, proceed to next question

2. Does the project ONLY include retrofitting or redeveloping existing paved alleys, streets or roads designed and constructed in accordance with the Green Streets guidance in the City's Stormwater Standards Manual?

   ○ Yes, PDP exempt requirements apply ● No, proceed to next question

PART E – Determine if Project is a Priority Development Project (PDP)

Projects that match one of the definitions below are subject to additional requirements, including preparation of a Stormwater Quality Management Plan (SWQMP).

- **If "yes" is checked for any number in Part E**, continue to Part F and check the box labeled "Priority Development Project."
- **If "no" is checked for every number in Part E**, continue to Part F and check the box labeled "Standard Development Project."

1. **New development that creates 10,000 square feet or more of impervious surfaces collectively over the project site.** This includes commercial, industrial, residential, mixed-use, and public development projects on public or private land. ● Yes ○ No

2. **Redevelopment project that creates and/or replaces 5,000 square feet or more of impervious surfaces on an existing site of 10,000 square feet or more of impervious surfaces.** This includes commercial, industrial, residential, mixed-use, and public development projects on public or private land. ○ Yes ● No

3. **New development or redevelopment of a restaurant.** Facilities that sell prepared foods and beverages for consumption, including stationary lunch counters and refreshment stands selling prepared foods and drinks for immediate consumption (Standard Industrial Classification (SIC) 5812), and where the land development creates and/or replaces 5,000 square feet or more of impervious surface. ○ Yes ● No

4. **New development or redevelopment on a hillside.** The project creates and/or replaces 5,000 square feet or more of impervious surface (collectively over the project site) and where the development will grade on any natural slope that is twenty-five percent or greater. ● Yes ○ No

5. **New development or redevelopment of a parking lot that creates and/or replaces 5,000 square feet or more of impervious surface (collectively over the project site).** ● Yes ○ No

6. **New development or redevelopment of streets, roads, highways, freeways, and driveways.** The project creates and/or replaces 5,000 square feet or more of impervious surface (collectively over the project site). ● Yes ○ No

7. **New development or redevelopment discharging directly to an environmentally sensitive area.** The project creates and/or replaces 2,500 square feet of impervious surface (collectively over the project site), and discharges directly to an Environmentally Sensitive Area (ESA). "Discharging directly to" includes flow that is conveyed overland a distance of 200 feet or less from the project to the ESA, or conveyed in a pipe or open channel any distance as an isolated flow from the project to the ESA (i.e. not commingled with flows from adjacent lands). ● Yes ○ No

8. **New development or redevelopment projects of retail gasoline outlet (RGO) that create and/or replaces 5,000 square feet of impervious surface.** The development project meets the following criteria: (a) 5,000 square feet or more or (b) has a projected Average Daily Traffic (ADT) of 100 or more vehicles per day. ○ Yes ● No

9. **New development or redevelopment projects of an automotive repair shop that creates and/or replaces 5,000 square feet or more of impervious surfaces.** Development projects categorized in any one of Standard Industrial Classification (SIC) codes 5013, 5014, 5541, 7532-7534 or 7536-7539. ○ Yes ● No

10. **Other Pollutant Generating Project.** These projects are not covered in any of the categories above but involve the disturbance of one or more acres of land and are expected to generate post-construction phase pollutants, including fertilizers and pesticides. This category does not include projects creating less than 5,000 square feet of impervious area and projects containing landscaping without a requirement for the regular use of fertilizers and pesticides (such as a slope stabilization project using native plants). Impervious area calculations need not include linear pathways for infrequent vehicle use, such as emergency maintenance access or bicycle and pedestrian paths if the linear pathways are built with pervious surfaces or if runoff from the pathway sheet flows to adjacent pervious areas. ○ Yes ● No

PART F – Select the appropriate category based on the outcomes of Part C through Part E

1. The project is **NOT SUBJECT TO PERMANENT STORMWATER REQUIREMENTS** ○ Yes ● No
2. The project is a **STANDARD DEVELOPMENT PROJECT**. Site design and source control BMP requirements apply. See the Stormwater Standards Manual for guidance. ○ Yes ● No
3. The Project is **PDP EXEMPT**. Site design and source control BMP requirements apply. Refer to the Stormwater Standards Manual for guidance. ○ Yes ● No
4. The project is a **PRIORITY DEVELOPMENT PROJECT**. Site design, source control and structural pollutant control BMP requirements apply. Refer to the Stormwater Standards Manual for guidance on determining if the project requires hydromodification plan management. ● Yes ○ No

Name of Owner or Agent **Title**

Signature **Date**

THIS PAGE INTENTIONALLY LEFT BLANK FOR DOUBLE-SIDED PRINTING

Applicability of Permanent, Post-Construction Storm Water BMP Requirements

Form I-1

Project Identification

Project Name: Southwest Village Vesting Tentative Map (VTM)

Permit Application Number: 614791

Date: 4/28/2023

Determination of Requirements

The purpose of this form is to identify permanent, post-construction requirements that apply to the project. This form serves as a short summary of applicable requirements, in some cases referencing separate forms that will serve as the backup for the determination of requirements.

Answer each step below, starting with **Step 1** and progressing through each step until reaching "Stop". Refer to the manual sections and/or separate forms referenced in each step below.

Step	Answer	Progression
Step 1: Is the project a "development project"? See Section 1.3 of the manual (Part 1 of Storm Water Standards) for guidance.	☑ Yes	Go to **Step 2**.
	☐ No	**Stop**. Permanent BMP requirements do not apply. No SWQMP will be required. Provide discussion below.

Discussion / justification if the project is not a "development project" (e.g., the project includes *only* interior remodels within an existing building):

Step	Answer	Progression
Step 2: Is the project a Standard Project, PDP, or PDP Exempt? To answer this item, see Section 1.4 of the manual in its entirety for guidance AND complete Form DS-560, Storm Water Requirements Applicability Checklist.	☐ Standard Project	**Stop.** Standard Project requirements apply
	☐ PDP	PDP requirements apply, including PDP SWQMP. Go to **Step 3**.
	☐ PDP Exempt	**Stop.** Standard Project requirements apply. Provide discussion and list any additional requirements below.

Discussion / justification, and additional requirements for exceptions to PDP definitions, if applicable:

Project Name: Southwest Village Vesting Tentative Map (VTM)

Form I-1 Page 2 of 2		
Step	**Answer**	**Progression**
Step 3. Is the project subject to earlier PDP requirements due to a prior lawful approval? See Section 1.10 of the manual (Part 1 of Storm Water Standards) for guidance.	☐ Yes	Consult the City Engineer to determine requirements. Provide discussion and identify requirements below. Go to **Step 4**.
	☐ No	BMP Design Manual PDP requirements apply. Go to **Step 4**.
Discussion / justification of prior lawful approval, and identify requirements (not required if prior lawful approval does not apply):		
Step 4. Do hydromodification control requirements apply? See Section 1.6 of the manual (Part 1 of Storm Water Standards) for guidance.	☑ Yes	PDP structural BMPs required for pollutant control (Chapter 5) and hydromodification control (Chapter 6). Go to **Step 5**.
	☐ No	**Stop**. PDP structural BMPs required for pollutant control (Chapter 5) only. Provide brief discussion of exemption to hydromodification control below.
Discussion / justification if hydromodification control requirements do not apply:		
Step 5. Does protection of critical coarse sediment yield areas apply? See Section 6.2 of the manual (Part 1 of Storm Water Standards) for guidance.	☑ Yes	Management measures required for protection of critical coarse sediment yield areas (Chapter 6.2). **Stop**.
	☐ No	Management measures not required for protection of critical coarse sediment yield areas. Provide brief discussion below. **Stop**.
Discussion / justification if protection of critical coarse sediment yield areas does not apply:		

HMP Exemption Exhibit

Attach a HMP Exemption Exhibit that shows direct storm water runoff discharge from the project site to HMP exempt area. Include project area, applicable underground storm drain line and/or concrete lined channels, outfall information and exempt waterbody.
Reference applicable drawing number(s).

Exhibit must be provided on 11"x17" or larger paper.

This project is not HMP exempt.

THIS PAGE INTENTIONALLY LEFT BLANK FOR DOUBLE-SIDED PRINTING

Site Information Checklist For PDPs	Form I-3B
Project Summary Information	
Project Name	Southwest Village Vesting Tentative Map (VTM)
Project Address	
Assessor's Parcel Number(s) (APN(s))	645-061-04, 645-061-06 through -09
Permit Application Number	614791
Project Watershed	Select One: ☐ San Dieguito River ☐ Penasquitos ☐ Mission Bay ☐ San Diego River ☐ San Diego Bay ☑ Tijuana River
Hydrologic subarea name with Numeric Identifier up to two decimal places (9XX.XX)	911.11, San Ysidro
Project Area (total area of Assessor's Parcel(s) associated with the project or total area of the right-of-way)	75.6 Acres (3,296,232 Square Feet)
Area to be disturbed by the project (Project Footprint)	112.0 Acres (4,878,026 Square Feet)
Project Proposed Impervious Area (subset of Project Footprint)	74.1 Acres (3,229,803 Square Feet)
Project Proposed Pervious Area (subset of Project Footprint)	37.8 Acres (1,648,223 Square Feet)
Note: Proposed Impervious Area + Proposed Pervious Area = Area to be Disturbed by the Project. This may be less than the Project Area.	
The proposed increase or decrease in impervious area in the proposed condition as compared to the pre-project condition	66 %

Form I-3B Page 2 of 11

Description of Existing Site Condition and Drainage Patterns

Current Status of the Site (select all that apply):

☐Existing development

☐Previously graded but not built out

☐Agricultural or other non-impervious use

☑Vacant, undeveloped/natural

Description / Additional Information:

The existing site is a mostly flat, undeveloped natural mesa that is adjacent to steep canyons.

Existing Land Cover Includes (select all that apply):

☑Vegetative Cover

☑Non-Vegetated Pervious Areas

☐Impervious Areas

Description / Additional Information:

The existing land cover includes vegetated and non-vegetated areas, with some intermittent shacks scattered across the mesa.

Underlying Soil belongs to Hydrologic Soil Group (select all that apply):

☐NRCS Type A

☐NRCS Type B

☐NRCS Type C

☑NRCS Type D

Approximate Depth to Groundwater:

☐Groundwater Depth < 5 feet

☐5 feet < Groundwater Depth < 10 feet

☐10 feet < Groundwater Depth < 20 feet

☐Groundwater Depth > 20 feet

Existing Natural Hydrologic Features (select all that apply):

☑Watercourses

☐Seeps

☐Springs

☐Wetlands

☐None

Description / Additional Information:

Moody Canyon Creek is located at the bottom of the steep sloping areas adjacent to the mesa.

Form I-3B Page 3 of 11

Description of Existing Site Topography and Drainage

How is storm water runoff conveyed from the site? At a minimum, this description should answer:

1. Whether existing drainage conveyance is natural or urban;
2. If runoff from offsite is conveyed through the site? If yes, quantification of all offsite drainage areas, design flows, and locations where offsite flows enter the project site and summarize how such flows are conveyed through the site;
3. Provide details regarding existing project site drainage conveyance network, including storm drains, concrete channels, swales, detention facilities, storm water treatment facilities, and natural and constructed channels;
4. Identify all discharge locations from the existing project along with a summary of the conveyance system size and capacity for each of the discharge locations. Provide summary of the pre-project drainage areas and design flows to each of the existing runoff discharge locations.

Descriptions/Additional Information

The project is defined by six (6) major drainage basins, Basin 100, Basin 200, Basin 300, Basin 400, Basin 500, and Basin 1400. Basin 100 encompasses the most northern portion of the project site and drains in a westerly direction towards Moody Canyon Creek and eventually to an existing storm drain system along Enright Drive. Basin 200 encompasses an area to the southeast of the project site and also drains in a westerly direction into Moody Canyon Creek which then conveys runoff towards the same existing storm drain system along Enright Drive. The existing storm drain system eventually outlets to the Tijuana River, which extends all the way to the Pacific Ocean within the vicinity of Imperial Beach.
Basin 300 encompasses the northern and eastern portions of the project site and drains in a northerly direction towards Moody Canyon Creek and eventually to an existing storm drain system along Enright Drive. Basin 400 and Basin 500 encompass the southern and western portions of the project site and drains in a westerly direction downhill into a small valley, at which point the runoff is dispersed in a sheet flow condition over a large, barren area. The drainage along the proposed Beyer Road, Basin 1400, drains west and will connect to the existing storm drain system along Enright Drive. The existing storm drain system along Enright Drive eventually outlets to the Tijuana River, which extends all the way to the Pacific Ocean within the vicinity of Imperial Beach.

Refer to the report titled, "Drainage Study for Southwest Village Vesting Tentative Map (VTM)," dated April 28, 2023 (or any revision thereof) for more information regarding drainage patterns.

Form I-3B Page 4 of 11

Description of Proposed Site Development and Drainage Patterns

Project Description / Proposed Land Use and/or Activities:

The proposed project will include a new housing development as well as an on-site drainage system improvements. Drainage patterns will remain similar to the existing condition. For more information regarding post-project drainage patterns, refer to the report titled, "Drainage Study for Southwest Village Vesting Tentative Map (VTM)," dated April 28, 2023 (or any revision thereof).

List/describe proposed impervious features of the project (e.g., buildings, roadways, parking lots, courtyards, athletic courts, other impervious features):

Impervious features will include detached single-family homes, multi-unit housing and roads.

List/describe proposed pervious features of the project (e.g., landscape areas):

Proposed pervious features include landscape areas.

Does the project include grading and changes to site topography?

☑ Yes
☐ No

Description / Additional Information:

The project includes grading in order to make the project feasible. In short, area is diverted away from the San Ysidro Landslide Complex to the west and towards the existing Storm Drain system in Beyer Blvd. Discharges into Moody Canyon upstream of the project POC 1 and 2 remain similar to existing conditions.

Form I-3B Page 5 of 11

Does the project include changes to site drainage (e.g., installation of new storm water conveyance systems)?

☑ Yes

☐ No

If yes, provide details regarding the proposed project site drainage conveyance network, including storm drains, concrete channels, swales, detention facilities, storm water treatment facilities, natural and constructed channels, and the method for conveying offsite flows through or around the proposed project site. Identify all discharge locations from the proposed project site along with a summary of the conveyance system size and capacity for each of the discharge locations. Provide a summary of pre and post-project drainage areas and design flows to each of the runoff discharge locations. Reference the drainage study for detailed calculations.

Description / Additional Information:

An on-site storm drain system is being proposed in order to convey storm water runoff from the project into one of the four (4) proposed permanent structural pollutant control and detention BMPs prior to discharging into one of the project's six (3) Points of Compliance (POCs). POC 1 is located at the bottom of a tributary canyon to Moody Canyon Creek near the north-western corner of the project site. POC 2 is located at the bottom of a separate tributary canyon to Moody Canyon Creek located near the south-western corner of the project site. POC M.C. for Beyer Blvd is located at the connection of the proposed roadway with existing improvements on Enright Drive. More information regarding the proposed storm water conveyance system is provided within the project's drainage study.

Form I-3B Page 6 of 11

Identify whether any of the following features, activities, and/or pollutant source areas will be present (select all that apply):

☑Onsite storm drain inlets
☐Interior floor drains and elevator shaft sump pumps
☐Interior parking garages
☐Need for future indoor & structural pest control
☑Landscape/outdoor pesticide use
☐Pools, spas, ponds, decorative fountains, and other water features
☐Food service
☑Refuse areas
☐Industrial processes
☐Outdoor storage of equipment or materials
☐Vehicle and equipment cleaning
☐Vehicle/equipment repair and maintenance
☐Fuel dispensing areas
☐Loading docks
☐Fire sprinkler test water
☐Miscellaneous drain or wash water
☑Plazas, sidewalks, and parking lots

Description/Additional Information:

Form I-3B Page 7 of 11

Identification and Narrative of Receiving Water

Narrative describing flow path from discharge location(s), through urban storm conveyance system, to receiving creeks, rivers, and lagoons and ultimate discharge location to Pacific Ocean (or bay, lagoon, lake or reservoir, as applicable)

The project has three (3) discharge points of compliance (POCs). POC 1: Existing tributary canyon to Moody Canyon Creek located at the northwest corner of the project site. Storm water runoff from POC 1 is discharged into the canyon via a proposed 24-inch RCP. POC 2: Existing tributary canyon to Moody Canyon Creek located at the southeast corner of the project site. Storm water runoff from POC 2 is discharged into the canyon via a proposed 54-inch RCP. Beyer Blvd's POC, POC-MC, is located at the connection with existing improvements on Enright Drive. Storm water runoff at this POC will be discharge through a 54-inch RCP. Storm water runoff from the project is ultimately discharged into the Pacific Ocean via the Tijuana River.

Provide a summary of all beneficial uses of receiving waters downstream of the project discharge locations

Moody Canyon has the following beneficial uses associated with it: IND, REC1, REC2, WARM and WILD.

Identify all ASBS (areas of special biological significance) receiving waters downstream of the project discharge locations

No ASBS receiving waters exist downstream of the project discharge locations.

Provide distance from project outfall location to impaired or sensitive receiving waters

The distance from the project outfalls to the Pacific Ocean is approximately 6 miles. The Tijuana River, which ultimately conveys runoff from the project site to the Pacific Ocean, is classified as an Environmentally Sensitive Area.

Summarize information regarding the proximity of the permanent, post-construction storm water BMPs to the City's Multi-Habitat Planning Area and environmentally sensitive lands

N/A

Form I-3B Page 8 of 11

Identification of Receiving Water Pollutants of Concern

List any 303(d) impaired water bodies within the path of storm water from the project site to the Pacific Ocean (or bay, lagoon, lake or reservoir, as applicable), identify the pollutant(s)/stressor(s) causing impairment, and identify any TMDLs and/or Highest Priority Pollutants from the WQIP for the impaired water bodies:

303(d) Impaired Water Body (Refer to Appendix K)	Pollutant(s)/Stressor(s) (Refer to Appendix K)	TMDLs/WQIP Highest Priority Pollutant (Refer to Table 1-4 in Chapter 1)
Tijuana River	Eutrophic, Indicator Bacteria, Low Dissolved Oxygen	Sedimentation/Siltation (wet weather); and Turbidity (wet weather)
Tijuana River	Pesticides, Phosphorus, Sedimentation/Siltation, Selenium	Sedimentation/Siltation (wet weather); and Turbidity (wet weather)
Tijuana River	Solids, Surfactants (MBAS), Synthetic Organics, Total Nitrogen as N	Sedimentation/Siltation (wet weather); and Turbidity (wet weather)
Tijuana River	Toxicity, Trace Elements, Trash	Sedimentation/Siltation (wet weather); and Turbidity (wet weather)
Tijuana River Estuary	Eutrophic, Indicator Bacteria, Lead, Low Dissolved Oxygen	
Tijuana River Estuary	Nickel, Pesticides, Thallium, Trash, Turbidity	

Identification of Project Site Pollutants*

*Identification of project site pollutants is only required if flow-thru treatment BMPs are implemented onsite in lieu of retention or biofiltration BMPs (note the project must also participate in an alternative compliance program unless prior lawful approval to meet earlier PDP requirements is demonstrated)

Identify pollutants anticipated from the project site based on all proposed use(s) of the site (see Appendix B.6):

Pollutant	Not Applicable to the Project Site	Anticipated from the Project Site	Also a Receiving Water Pollutant of Concern
Sediment	☐	☑	☐
Nutrients	☐	☑	☐
Heavy Metals	☑	☐	☐
Organic Compounds	☑	☐	☐
Trash & Debris	☐	☑	☐
Oxygen Demanding Substances	☐	☑	☐
Oil & Grease	☐	☑	☐
Bacteria & Viruses	☐	☑	☐
Pesticides	☐	☑	☐

Form I-3B Page 9 of 11

Hydromodification Management Requirements

Do hydromodification management requirements apply (see Section 1.6)?

☑ Yes, hydromodification management flow control structural BMPs required.

☐ No, the project will discharge runoff directly to existing underground storm drains discharging directly to water storage reservoirs, lakes, enclosed embayments, or the Pacific Ocean.

☐ No, the project will discharge runoff directly to conveyance channels whose bed and bank are concrete-lined all the way from the point of discharge to water storage reservoirs, lakes, enclosed embayments, or the Pacific Ocean.

☐ No, the project will discharge runoff directly to an area identified as appropriate for an exemption by the WMAA for the watershed in which the project resides.

Description / Additional Information (to be provided if a 'No' answer has been selected above):

Note: If “No” answer has been selected the SWQMP must include an exhibit that shows the storm water conveyance system from the project site to an exempt water body. The exhibit should include details about the conveyance system and the outfall to the exempt water body.

Critical Coarse Sediment Yield Areas*
*This Section only required if hydromodification management requirements apply

Based on Section 6.2 and Appendix H does CCSYA exist on the project footprint or in the upstream area draining through the project footprint?

☑ Yes

☐ No

Discussion / Additional Information:

Based upon mapping, it appears that potential CCSYAs exist within a portion of the project footprint. This may require further evaluation during the entitlement phase (if required), or alternatively during final engineering. This has included a project-specific Geomorphic Landscape Unit (GLU) analysis and/or a no net impact analysis.

Our project site is located at the top of a flat mesa where no upstream area is impeded by our project location. The potential CCSYAs mapping shows areas that are located predominantly on the perimeter of our project site.

Form I-3B Page 10 of 11

Flow Control for Post-Project Runoff*

***This Section only required if hydromodification management requirements apply**

List and describe point(s) of compliance (POCs) for flow control for hydromodification management (see Section 6.3.1). For each POC, provide a POC identification name or number correlating to the project's HMP Exhibit and a receiving channel identification name or number correlating to the project's HMP Exhibit.

The project has three (3) discharge points of compliance (POCs).
POC 1: Existing tributary canyon to Moody Canyon Creek located at the northwest corner of the project site. Storm water runoff from POC 1 is discharged into the canyon via a proposed 24-inch RCP. HMP is required for runoff discharged to POC 1.
POC 2: Existing tributary canyon to Moody Canyon Creek located at the southeast corner of the project site. Storm water runoff from POC 2 is discharged into the canyon via a proposed 54-inch RCP. HMP is required for runoff discharged to POC 2.
POC-MC: Existing 54-inch storm drain backbone for Beyer Blvd. All storm water from Basins 100, 200, 300, and 1400, ultimately reaches this point.

Storm water runoff from the project is ultimately discharged into the Pacific Ocean via the Tijuana River.

Has a geomorphic assessment been performed for the receiving channel(s)?

☐ No, the low flow threshold is $0.1Q_2$ (default low flow threshold)
☑ Yes, the result is the low flow threshold is $0.1Q_2$
☐ Yes, the result is the low flow threshold is $0.3Q_2$
☑ Yes, the result is the low flow threshold is $0.5Q_2$

If a geomorphic assessment has been performed, provide title, date, and preparer:

A geomorphic channel assessment has been prepared, and is included in Attachment 2c.

Discussion / Additional Information: (optional)

The project will use a different low flow threshold depending on the POC. POCs 1 & 2 use 0.1Q2. POC M.C. uses 0.5Q2. The higher low flow threshold is warranted because downstream of POC M.C. flows continue through hardened conveyance systems before discharge into Tijuana Esturary.

Project Name: Southwest Village Vesting Tentative Map (VTM)

Form I-3B Page 11 of 11
Other Site Requirements and Constraints
When applicable, list other site requirements or constraints that will influence storm water management design, such as zoning requirements including setbacks and open space, or local codes governing minimum street width, sidewalk construction, allowable pavement types, and drainage requirements.
Optional Additional Information or Continuation of Previous Sections As Needed
This space provided for additional information or continuation of information from previous sections as needed.

Project Name: Southwest Village Vesting Tentative Map (VTM)

Source Control BMP Checklist for PDPs	Form I-4B

Source Control BMPs

All development projects must implement source control BMPs where applicable and feasible. See Chapter 4 and Appendix E of the BMP Design Manual (Part 1 of the Storm Water Standards) for information to implement source control BMPs shown in this checklist.

Answer each category below pursuant to the following.

- "Yes" means the project will implement the source control BMP as described in Chapter 4 and/or Appendix E of the BMP Design Manual. Discussion / justification is not required.
- "No" means the BMP is applicable to the project but it is not feasible to implement. Discussion / justification must be provided.
- "N/A" means the BMP is not applicable at the project site because the project does not include the feature that is addressed by the BMP (e.g., the project has no outdoor materials storage areas). Discussion / justification may be provided.

Source Control Requirement	Applied?		
4.2.1 Prevention of Illicit Discharges into the MS4	☑ Yes	☐ No	☐ N/A
Discussion / justification if 4.2.1 not implemented:			
4.2.2 Storm Drain Stenciling or Signage	☑ Yes	☐ No	☐ N/A
Discussion / justification if 4.2.2 not implemented:			
4.2.3 Protect Outdoor Materials Storage Areas from Rainfall, Run-On, Runoff, and Wind Dispersal	☐ Yes	☐ No	☑ N/A
Discussion / justification if 4.2.3 not implemented:			
4.2.4 Protect Materials Stored in Outdoor Work Areas from Rainfall, Run-On, Runoff, and Wind Dispersal	☐ Yes	☐ No	☑ N/A
Discussion / justification if 4.2.4 not implemented:			
4.2.5 Protect Trash Storage Areas from Rainfall, Run-On, Runoff, and Wind Dispersal	☑ Yes	☐ No	☐ N/A
Discussion / justification if 4.2.5 not implemented:			

Form I-4B Page 2 of 2

Source Control Requirement	Applied?		
4.2.6 Additional BMPs Based on Potential Sources of Runoff Pollutants (must answer for each source listed below)			
On-site storm drain inlets	☑ Yes	☐ No	☐ N/A
Interior floor drains and elevator shaft sump pumps	☐ Yes	☐ No	☑ N/A
Interior parking garages	☐ Yes	☐ No	☑ N/A
Need for future indoor & structural pest control	☐ Yes	☐ No	☑ N/A
Landscape/Outdoor Pesticide Use	☑ Yes	☐ No	☐ N/A
Pools, spas, ponds, decorative fountains, and other water features	☐ Yes	☐ No	☑ N/A
Food service	☐ Yes	☐ No	☑ N/A
Refuse areas	☑ Yes	☐ No	☐ N/A
Industrial processes	☐ Yes	☐ No	☑ N/A
Outdoor storage of equipment or materials	☐ Yes	☐ No	☑ N/A
Vehicle/Equipment Repair and Maintenance	☐ Yes	☐ No	☑ N/A
Fuel Dispensing Areas	☐ Yes	☐ No	☑ N/A
Loading Docks	☐ Yes	☐ No	☑ N/A
Fire Sprinkler Test Water	☐ Yes	☐ No	☑ N/A
Miscellaneous Drain or Wash Water	☐ Yes	☐ No	☑ N/A
Plazas, sidewalks, and parking lots	☑ Yes	☐ No	☐ N/A
SC-6A: Large Trash Generating Facilities	☐ Yes	☐ No	☑ N/A
SC-6B: Animal Facilities	☐ Yes	☐ No	☑ N/A
SC-6C: Plant Nurseries and Garden Centers	☐ Yes	☐ No	☑ N/A
SC-6D: Automotive Facilities	☐ Yes	☐ No	☑ N/A
Discussion / justification if 4.2.6 not implemented. Clearly identify which sources of runoff pollutants are discussed. Justification must be provided for all "No" answers shown above.			

Project Name: Southwest Village Vesting Tentative Map (VTM)

Site Design BMP Checklist for PDPs	Form I-5B		
Site Design BMPs			
All development projects must implement site design BMPs where applicable and feasible. See Chapter 4 and Appendix E of the BMP Design Manual (Part 1 of Storm Water Standards) for information to implement site design BMPs shown in this checklist. Answer each category below pursuant to the following. • "Yes" means the project will implement the site design BMP as described in Chapter 4 and/or Appendix E of the BMP Design Manual. Discussion / justification is not required. • "No" means the BMP is applicable to the project but it is not feasible to implement. Discussion / justification must be provided. • "N/A" means the BMP is not applicable at the project site because the project does not include the feature that is addressed by the BMP (e.g., the project site has no existing natural areas to conserve). Discussion / justification may be provided. A site map with implemented site design BMPs must be included at the end of this checklist.			
Site Design Requirement	**Applied?**		
4.3.1 Maintain Natural Drainage Pathways and Hydrologic Features	☑Yes	☐No	☐N/A
Discussion / justification if 4.3.1 not implemented:			
1-1 Are existing natural drainage pathways and hydrologic features mapped on the site map?	☑ Yes	☐ No	☐ N/A
1-2 Are trees implemented? If yes, are they shown on the site map?	☐ Yes	☑ No	☐ N/A
1-3 Implemented trees meet the design criteria in 4.3.1 Fact Sheet (e.g. soil volume, maximum credit, etc.)?	☐ Yes	☑ No	☐ N/A
1-4 Is tree credit volume calculated using Appendix B.2.2.1 and SD-1 Fact Sheet in Appendix E?	☐ Yes	☑ No	☐ N/A
4.3.2 Have natural areas, soils and vegetation been conserved?	☑ Yes	☐ No	☐ N/A
Discussion / justification if 4.3.2 not implemented:			

Project Name: Southwest Village Vesting Tentative Map (VTM)

Form I-5B Page 2 of 4

Site Design Requirement	Applied?		
4.3.3 Minimize Impervious Area	☑ Yes	☐ No	☐ N/A
Discussion / justification if 4.3.3 not implemented:			
4.3.4 Minimize Soil Compaction	☑ Yes	☐ No	☐ N/A
Discussion / justification if 4.3.4 not implemented:			
4.3.5 Impervious Area Dispersion	☑ Yes	☐ No	☐ N/A
Discussion / justification if 4.3.5 not implemented:			
5-1 Is the pervious area receiving runon from impervious area identified on the site map?	☑ Yes	☐ No	☐ N/A
5-2 Does the pervious area satisfy the design criteria in 4.3.5 Fact Sheet in Appendix E (e.g. maximum slope, minimum length, etc.)	☑ Yes	☐ No	☐ N/A
5-3 Is impervious area dispersion credit volume calculated using Appendix B.2.1.1 and 4.3.5 Fact Sheet in Appendix E?	☑ Yes	☐ No	☐ N/A

Form I-5B Page 3 of 4

Site Design Requirement	Applied?		
4.3.6 Runoff Collection	☐ Yes	☐ No	☑ N/A
Discussion / justification if 4.3.6 not implemented:			
6a-1 Are green roofs implemented in accordance with design criteria in 4.3.6A Fact Sheet? If yes, are they shown on the site map?	☐ Yes	☐ No	☑ N/A
6a-2 Is the green roof credit volume calculated using Appendix B.2.1.2 and 4.3.6A Fact Sheet in Appendix E?	☐ Yes	☐ No	☑ N/A
6b-1 Are permeable pavements implemented in accordance with design criteria in 4.3.6B Fact Sheet? If yes, are they shown on the site map?	☐ Yes	☐ No	☑ N/A
6b-2 Is the permeable pavement credit volume calculated using Appendix B.2.1.3 and 4.3.6B Fact Sheet in Appendix E?	☐ Yes	☐ No	☑ N/A
4.3.7 Landscaping with Native or Drought Tolerant Species	☑ Yes	☐ No	☐ N/A
Discussion / justification if 4.3.7 not implemented:			
4.3.8 Harvest and Use Precipitation	☐ Yes	☐ No	☑ N/A
Discussion / justification if 4.3.8 not implemented: Harvest and Use was determined to be infeasible per worksheet I-7.			
8-1 Are rain barrels implemented in accordance with design criteria in 4.3.8 Fact Sheet? If yes, are they shown on the site map?	☐ Yes	☑ No	☐ N/A
8-2 Is the rain barrel credit volume calculated using Appendix B.2.2.2 and 4.3.8 Fact Sheet in Appendix E?	☐ Yes	☑ No	☐ N/A

Project Name: Southwest Village Vesting Tentative Map (VTM)

Form I-5B Page 4 of 4
Insert Site Map with all site design BMPs identified:
See DMA Exhibit in Attachment 1A

Summary of PDP Structural BMPs	Form I-6

PDP Structural BMPs

All PDPs must implement structural BMPs for storm water pollutant control (see Chapter 5 of the BMP Design Manual, Part 1 of Storm Water Standards). Selection of PDP structural BMPs for storm water pollutant control must be based on the selection process described in Chapter 5. PDPs subject to hydromodification management requirements must also implement structural BMPs for flow control for hydromodification management (see Chapter 6 of the BMP Design Manual). Both storm water pollutant control and flow control for hydromodification management can be achieved within the same structural BMP(s).

PDP structural BMPs must be verified by the City at the completion of construction. This includes requiring the project owner or project owner's representative to certify construction of the structural BMPs (complete Form DS-563). PDP structural BMPs must be maintained into perpetuity (see Chapter 7 of the BMP Design Manual).

Use this form to provide narrative description of the general strategy for structural BMP implementation at the project site in the box below. Then complete the PDP structural BMP summary information sheet (page 3 of this form) for each structural BMP within the project (copy the BMP summary information page as many times as needed to provide summary information for each individual structural BMP).

Describe the general strategy for structural BMP implementation at the site. This information must describe how the steps for selecting and designing storm water pollutant control BMPs presented in Section 5.1 of the BMP Design Manual were followed, and the results (type of BMPs selected). For projects requiring hydromodification flow control BMPs, indicate whether pollutant control and flow control BMPs are integrated or separate.

Harvest and Use was deemed to be infeasible at the project site, therefore, the next step was to determine the feasibility of infiltration at the site. At this preliminary stage, no geotechnical investigation has been conducted. Based upon the Type "D" soils present at the site, and the proximity of the project to known landslide zones, it has been assumed that the project will be in a "No Infiltration" condition. It was determined that the use of biofiltration basins (BF-1) would be feasible for POC-MC along Beyer Blvd, but due to site constraints this same approach would be infeasible for Basins 100, 200, and 300, therefore a combination of subterranean detention vaults (for hydromodification management) and Modular Wetland Systems (for pollutant control) are being proposed at those locations. At all locations using detention vaults runoff will first be directed towards a hydrodynamic separator device for compliance with the new state trash amendment. After passing through the hydrodynamic separator, the vault will provide hydromodification management and flood control. Low flows will be directed from the vault to a downstream Modular Wetland System (MWS) for pollutant control prior to being discharged via a single outfall at the applicable POC. POCs 1 & 2 are located at the bottom of separate tributary canyons to Moody Canyon Creek.

(Continue on page 2 as necessary.)

Form I-6 Page 2 of 10

(Continued from page 1)

Outflows from BMP 3 will discharge into the proposed backbone Storm Drain along Beyer Blvd. While atypical, the mingling of clean and untreated flows was deemed to be the best option considering difficulties maintaining a very inaccessible storm drain outfall in Moody Canyon and the environmental impacts resulting from its construction. Meetings with the City of San Diego Department of Development services have supported this approach. All HMP and Pollutant control analysis considers the effect of having BMP 3 and 14 in series.

Considering retention volume requirements, dispersion areas have been documented and address somewhat regionally to take advantage of using HOA lots and multi-use areas. In this way, more effective enforcement of the dispersion area into perpetuity can be ensured.

Project Name: Southwest Village Vesting Tentative Map (VTM)

Form I-6 Page 3 of 10 (Copy as many as needed)

Structural BMP Summary Information

Structural BMP ID No. 1

Construction Plan Sheet No.

Type of Structural BMP:
☐ Retention by harvest and use (e.g. HU-1, cistern)
☐ Retention by infiltration basin (INF-1)
☐ Retention by bioretention (INF-2)
☐ Retention by permeable pavement (INF-3)
☐ Partial retention by biofiltration with partial retention (PR-1)
☐ Biofiltration (BF-1)
☐ Flow-thru treatment control with prior lawful approval to meet earlier PDP requirements (provide BMP type/description in discussion section below)
☐ Flow-thru treatment control included as pre-treatment/forebay for an onsite retention or biofiltration BMP (provide BMP type/description and indicate which onsite retention or biofiltration BMP it serves in discussion section below)
☐ Flow-thru treatment control with alternative compliance (provide BMP type/description in discussion section below)
☐ Detention pond or vault for hydromodification management
☑ Other (describe in discussion section below)

Purpose:
☐ Pollutant control only
☐ Hydromodification control only
☑ Combined pollutant control and hydromodification control
☐ Pre-treatment/forebay for another structural BMP
☐ Other (describe in discussion section below)

Who will certify construction of this BMP? Provide name and contact information for the party responsible to sign BMP verification form DS-563	Rick Engineering Company
Who will be the final owner of this BMP?	HOA
Who will maintain this BMP into perpetuity?	HOA
What is the funding mechanism for maintenance?	HOA

Form I-6 Page 4 of 10 (Copy as many as needed)
Structural BMP ID No. 1
Construction Plan Sheet No.
Discussion (as needed; must include worksheets showing BMP sizing calculations in the SWQMPs):

At POC-1 runoff will first be directed by on-site conveyance systems towards a hydrodynamic separator device for compliance with the new state trash amendment. After passing through the hydrodynamic separator, the runoff will enter a detention vault for the purpose of hydromodification management and flood control. Low flows will be directed from the vault to a downstream Modular Wetland System (MWS) for pollutant control prior to being discharged via a single outfall at POC-1. High flows will bypass the MWS and be conveyed directly to the single outfall.

Note: The footprint of the underground vault shown on the tentative map drawings/plans might fluctuate slightly from what is shown on the Drainage Management Area (DMA) Exhibit located in Attachment 1A. However, the supporting calculations were checked to ensure that the provided volume of the proposed vault is greater than the required volume for the purpose of preliminary engineering design approval. Additional refinement to the layout and final configuration of the proposed underground vault will be made during final engineering.

Form I-6 Page 5 of 10 (Copy as many as needed)

Structural BMP Summary Information

Structural BMP ID No. 2

Construction Plan Sheet No.

Type of Structural BMP:

☐ Retention by harvest and use (e.g. HU-1, cistern)
☐ Retention by infiltration basin (INF-1)
☐ Retention by bioretention (INF-2)
☐ Retention by permeable pavement (INF-3)
☐ Partial retention by biofiltration with partial retention (PR-1)
☐ Biofiltration (BF-1)
☐ Flow-thru treatment control with prior lawful approval to meet earlier PDP requirements (provide BMP type/description in discussion section below)
☐ Flow-thru treatment control included as pre-treatment/forebay for an onsite retention or biofiltration BMP (provide BMP type/description and indicate which onsite retention or biofiltration BMP it serves in discussion section below)
☐ Flow-thru treatment control with alternative compliance (provide BMP type/description in discussion section below)
☐ Detention pond or vault for hydromodification management
☑ Other (describe in discussion section below)

Purpose:

☐ Pollutant control only
☐ Hydromodification control only
☑ Combined pollutant control and hydromodification control
☐ Pre-treatment/forebay for another structural BMP
☐ Other (describe in discussion section below)

Who will certify construction of this BMP? Provide name and contact information for the party responsible to sign BMP verification form DS-563	Rick Engineering Company
Who will be the final owner of this BMP?	HOA
Who will maintain this BMP into perpetuity?	HOA
What is the funding mechanism for maintenance?	HOA

Form I-6 Page 6 of 10 (Copy as many as needed)
Structural BMP ID No. 2
Construction Plan Sheet No.
Discussion (as needed; must include worksheets showing BMP sizing calculations in the SWQMPs):

At POC-2 runoff will first be directed by on-site conveyance systems towards a hydrodynamic separator device for compliance with the new state trash amendment. After passing through the hydrodynamic separator, the runoff will enter a detention vault for the purpose of hydromodification management and flood control. Low flows will be directed from the vault to a downstream Modular Wetland System (MWS) for pollutant control prior to being discharged via a single outfall at POC-2. High flows will bypass the MWS and be conveyed directly to the single outfall.

Note: The footprint of the underground vault shown on the tentative map drawings/plans might fluctuate slightly from what is shown on the Drainage Management Area (DMA) Exhibit located in Attachment 1A. However, the supporting calculations were checked to ensure that the provided volume of the proposed vault is greater than the required volume for the purpose of preliminary engineering design approval. Additional refinement to the layout and final configuration of the proposed underground vault will be made during final engineering.

Project Name: Southwest Village Vesting Tentative Map (VTM)

Form I-6 Page 7 of 10 (Copy as many as needed)

Structural BMP Summary Information

Structural BMP ID No. 3

Construction Plan Sheet No.

Type of Structural BMP:

☐ Retention by harvest and use (e.g. HU-1, cistern)
☐ Retention by infiltration basin (INF-1)
☐ Retention by bioretention (INF-2)
☐ Retention by permeable pavement (INF-3)
☐ Partial retention by biofiltration with partial retention (PR-1)
☐ Biofiltration (BF-1)
☐ Flow-thru treatment control with prior lawful approval to meet earlier PDP requirements (provide BMP type/description in discussion section below)
☐ Flow-thru treatment control included as pre-treatment/forebay for an onsite retention or biofiltration BMP (provide BMP type/description and indicate which onsite retention or biofiltration BMP it serves in discussion section below)
☐ Flow-thru treatment control with alternative compliance (provide BMP type/description in discussion section below)
☐ Detention pond or vault for hydromodification management
☑ Other (describe in discussion section below)

Purpose:

☐ Pollutant control only
☐ Hydromodification control only
☑ Combined pollutant control and hydromodification control
☐ Pre-treatment/forebay for another structural BMP
☐ Other (describe in discussion section below)

Who will certify construction of this BMP? Provide name and contact information for the party responsible to sign BMP verification form DS-563	Rick Engineering Company
Who will be the final owner of this BMP?	HOA
Who will maintain this BMP into perpetuity?	HOA
What is the funding mechanism for maintenance?	HOA

Form I-6 Page 8 of 10 (Copy as many as needed)
Structural BMP ID No. 3
Construction Plan Sheet No.
Discussion (as needed; must include worksheets showing BMP sizing calculations in the SWQMPs): For DMA 3 runoff will first be directed by on-site conveyance systems towards a hydrodynamic separator device for compliance with the new state trash amendment. After passing through the hydrodynamic separator, the runoff will enter a detention vault for the purpose of hydromodification management and flood control. Low flows will be directed from the vault to a downstream Modular Wetland System (MWS) for pollutant control prior to being discharged to the backbone storm drain on Beyer Blvd. Note: The footprint of the underground vault shown on the tentative map drawings/plans might fluctuate slightly from what is shown on the Drainage Management Area (DMA) Exhibit located in Attachment 1A. However, the supporting calculations were checked to ensure that the provided volume of the proposed vault is greater than the required volume for the purpose of preliminary engineering design approval. Additional refinement to the layout and final configuration of the proposed underground vault will be made during final engineering.

Project Name: Southwest Village Vesting Tentative Map (VTM)

Form I-6 Page 9 of 10 (Copy as many as needed)

Structural BMP Summary Information

Structural BMP ID No. 14

Construction Plan Sheet No.

Type of Structural BMP:

☐ Retention by harvest and use (e.g. HU-1, cistern)
☐ Retention by infiltration basin (INF-1)
☐ Retention by bioretention (INF-2)
☐ Retention by permeable pavement (INF-3)
☐ Partial retention by biofiltration with partial retention (PR-1)
☑ Biofiltration (BF-1)
☐ Flow-thru treatment control with prior lawful approval to meet earlier PDP requirements (provide BMP type/description in discussion section below)
☐ Flow-thru treatment control included as pre-treatment/forebay for an onsite retention or biofiltration BMP (provide BMP type/description and indicate which onsite retention or biofiltration BMP it serves in discussion section below)
☐ Flow-thru treatment control with alternative compliance (provide BMP type/description in discussion section below)
☐ Detention pond or vault for hydromodification management
☐ Other (describe in discussion section below)

Purpose:

☐ Pollutant control only
☐ Hydromodification control only
☑ Combined pollutant control and hydromodification control
☐ Pre-treatment/forebay for another structural BMP
☐ Other (describe in discussion section below)

Who will certify construction of this BMP? Provide name and contact information for the party responsible to sign BMP verification form DS-563	Rick Engineering Company
Who will be the final owner of this BMP?	City of San Diego
Who will maintain this BMP into perpetuity?	City of San Diego
What is the funding mechanism for maintenance?	City of San Diego

THIS PAGE INTENTIONALLY LEFT BLANK FOR DOUBLE-SIDED PRINTING

Attachment 1
Backup For PDP Pollutant Control BMPs

This is the cover sheet for Attachment 1.

THIS PAGE INTENTIONALLY LEFT BLANK FOR DOUBLE-SIDED PRINTING

THIS PAGE INTENTIONALLY LEFT BLANK FOR DOUBLE-SIDED PRINTING

Project Name: Southwest Village Vesting Tentative Map (VTM)

Indicate which Items are Included:

Attachment Sequence	Contents	Checklist
Attachment 1a	DMA Exhibit (Required) See DMA Exhibit Checklist.	☑ Included
Attachment 1b	Tabular Summary of DMAs Showing DMA ID matching DMA Exhibit, DMA Area, and DMA Type (Required)* *Provide table in this Attachment OR on DMA Exhibit in Attachment 1a	☐ Included on DMA Exhibit in Attachment 1a ☑ Included as Attachment 1b, separate from DMA Exhibit
Attachment 1c	Form I-7, Harvest and Use Feasibility Screening Checklist (Required unless the entire project will use infiltration BMPs) Refer to Appendix B.3-1 of the BMP Design Manual to complete Form I-7.	☑ Included ☐ Not included because the entire project will use infiltration BMPs
Attachment 1d	Infiltration Feasibility Information. Contents of Attachment 1d depend on the infiltration condition: • No Infiltration Condition: ○ Infiltration Feasibility Condition Letter (*Note: must be stamped and signed by licensed geotechnical engineer*) ○ Form I-8A (optional) ○ Form I-8B (optional) • Partial Infiltration Condition: ○ Infiltration Feasibility Condition Letter (*Note: must be stamped and signed by licensed geotechnical engineer*) ○ Form I-8A ○ Form I-8B • Full Infiltration Condition: ○ Form I-8A ○ Form I-8B ○ Worksheet C.4-3 ○ Form I-9 Refer to Appendices C and D of the BMP Design Manual for guidance.	☐ Included ☐ Not included because the entire project will use harvest and use BMPs
Attachment 1e	Pollutant Control BMP Design Worksheets / Calculations (Required) Refer to Appendices B and E of the BMP Design Manual for structural pollutant control BMP design guidelines and site design credit calculations	☑ Included

Use this checklist to ensure the required information has been included on the DMA Exhibit:

The DMA Exhibit must identify:

☑ Underlying hydrologic soil group
☑ Approximate depth to groundwater
☑ Existing natural hydrologic features (watercourses, seeps, springs, wetlands)
☑ Critical coarse sediment yield areas to be protected
☑ Existing topography and impervious areas
☑ Existing and proposed site drainage network and connections to drainage offsite
☑ Proposed grading
☑ Proposed impervious features
☑ Proposed design features and surface treatments used to minimize imperviousness
☑ Drainage management area (DMA) boundaries, DMA ID numbers, and DMA areas (square footage or acreage), and DMA type (i.e., drains to BMP, self-retaining, or self-mitigating)
☑ Potential pollutant source areas and corresponding required source controls (see Chapter 4, Appendix E.1, and Form I-3B)
☑ Structural BMPs (identify location, type of BMP, size/detail, and include cross-section)

THIS PAGE INTENTIONALLY LEFT BLANK FOR DOUBLE-SIDED PRINTING

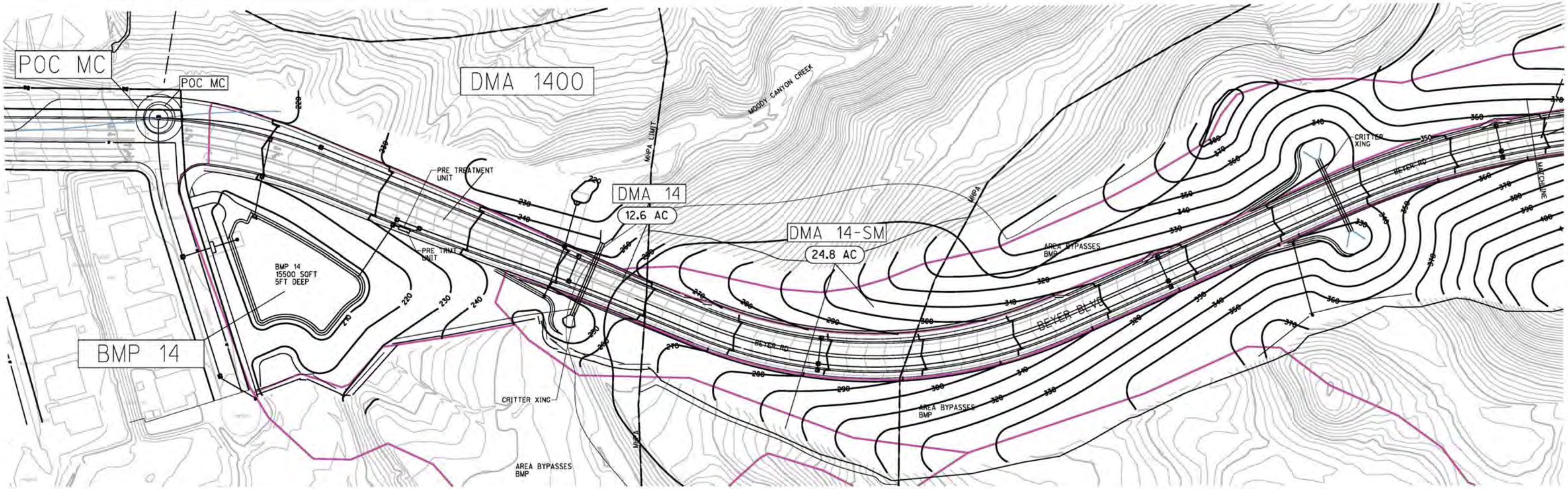

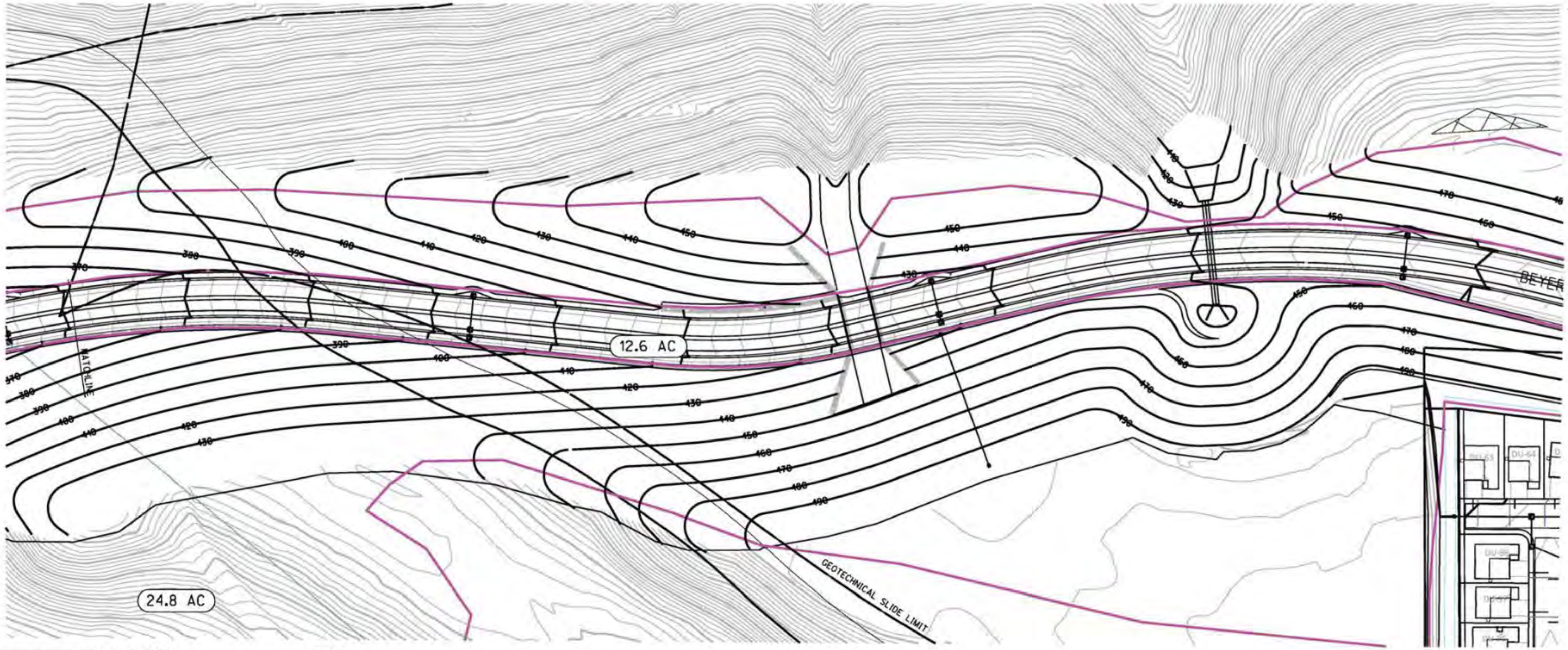

NOTES

1. DOWNSTREAM OF POC MC, FLOWS CONTINUE THROUGH HARDENED CONVEYANCES TOWARDS THE TIJUANA RIVER ESTUARY.

2. THIS SHEET DISPLAYS THE DRAINAGE SYSTEM AND STRUCTURAL BMP FOR BAYER BLVD. FOR THE VTM AREAS SEE SHEETS 2 & 3

3. BIOFILTRATION BASIN 14, SHOWN ON THIS EXHIBIT, ALSO RECIEVES UPSTREAM TREATED FLOWS FROM BMP 3 IN PAs 11-14 OF THE VTM. THE BASIN HAS BEEN DESIGNED TO 1. STORE 75% OF THE WATER QUALITY STORM EVENT AND 2. BIOFILTER AT A RATE GREATER THAN THE MAXIMUM LOW FLOW RATE OUT OF THE UPSTREAM VAULT. THIS ENSURES THAT DURING WATER QUALITY STORM EVENTS THE STORAGE CAPACITY OF THE BASIN WILL NOT BE OCCUPIED WITH TREATED UPSTREAM FLOWS.

4. EPASWMM MODELING HAS BEEN DONE DEMONSTRATING THAT, IN AGREGATE, THE PROPOSED STRUCTURAL BMPs MITIGATE MAGNITUDE AND FREQUENCY OF DISCHARGES FROM THE PROJECT FOR 0.5Q2 TO Q10. REFER TO THE GEOMORPHIC CHANNEL ASSESSMENT FOR JUSTIFICATION FOR 0.5Q2 LOW FLOW THRESHOLD.

5. DITCHES ARE PROPOSED ALONG THE SIDES OF BAYER ROAD TO INTERCEPT DRAINAGE FROM SLOPES AND OFFSITE PERVIOUS AREAS. THESE AREAS HAVE BEEN DESIGNATED SELF MITIGATING.

LEGEND

◎	POC
DMA 10	DMA ID
(X.X AC.)	BASIN AREA
—	DMA BOUNDARY
▨	PCCSYA

N

60 30 0 60 120 180

GRAPHIC SCALE 1" = 60'

DMA AND HMP EXHIBIT
SOUTHWEST VILLAGE VTM

BEYER ROAD

Sheet 1 of 3

April 28, 2023

J-15013-C

NOT FOR CONSTRUCTION - EXHIBIT FOR PDPSWQMP ONLY

RICK
ENGINEERING COMPANY
San Diego
5620 FRIARS ROAD
SAN DIEGO, CA 92110
619-291-0707
(FAX) 619-291-4165
rickengineering.com
Riverside - Orange - Sacramento - San Luis Obispo - Phoenix - Tucson - Denver

J-15013-C

NOTES

1. WATER QUALITY CONTROL FOR DMA 3 SHOWN ON THE EXHIBIT WILL BE DONE WITH TWO 8-24 MODULAR WETLANDS UNITS THAT RECIEVE METERED FLOWS FROM THE UPSTREAM VAULT. ADDITIONALLY HYDRODYNAMIC SEPERATOR UNITS ARE PROPOSED UPSTREAM OF THE VAULT TO TRAP SEDIMENT AND DEBRIS.

2. BAYER BLVD, CENTRAL ROAD AND XXX ARE PUBLIC ROADS. EFFORTS HAVE BEEN MADE TO DRAIN THESE AREAS INTO THE PUBLIC STORM DRAIN ON CENTRAL AVE AND BAYER. THE SMALL PORTIONS THAT CANNOT BE FEASIBLY PIPED INTO THE PUBLIC SYSTEM INCLUDING THE CUL-DE-SAC AND ROUNDABOUT ARE TREATED IN THE PRIVATE SYSTEM, BMP 3.

3. A SIGNIFIGANT DIVERSION, 15AC, WAS NECESSARY TO AVOID PLACING STORM DRAIN OUTFALLS INTO THE GEOTECHNICAL SLIDE AREA. THE VAULT OF BMP 3 HAS BEEN OVERSIZED TO OFFSET THE POTENTIAL ADVERSE IMPACT OF THE DIVERSION.

4. THE PROJECT PROPOSES TO USE IMPERVIOUS AREA DISPERSION OF WALKWAYS TO MEET VOLUME RETENTION CRITERIA.

5. BASED ON THE SAN DIEGO REGIONAL MAPPING DOCUMENT, THERE IS A FEW POTENTIAL CRITICAL COURSE SEDIMENT YIELD AREAS THAT ARE IDENTIFIED WITHIN THE PROJECT AREA. WHERE THE PCCSYA EXISTS, A MORE DETAILED ANALYSIS MAY BE REQUIRED PRIOR TO OR DURING THE FINAL ENGINEERING (CONSTRUCTION DOCUMENT) STAGE TO ADDRESS THE REQUIREMENTS.

LEGEND

◎	POC
DMA 10	DMA ID
X.X AC.	BASIN AREA
—	DMA BOUNDARY
▨	PCCSYA

RICK
ENGINEERING COMPANY
San Diego
5620 FRIARS ROAD
SAN DIEGO, CA 92110
619-291-0707
(FAX) 619-291-4165
J-15013-C
rickengineering.com
Riverside - Orange - Sacramento - San Luis Obispo - Phoenix - Tucson - Denver

NOT FOR CONSTRUCTION - EXHIBIT FOR PDPSWQMP ONLY

DMA AND HMP EXHIBIT
SOUTHWEST VILLAGE VTM

PA 11-14
Sheet 2 of 3
April 28, 2023
J-15013-C

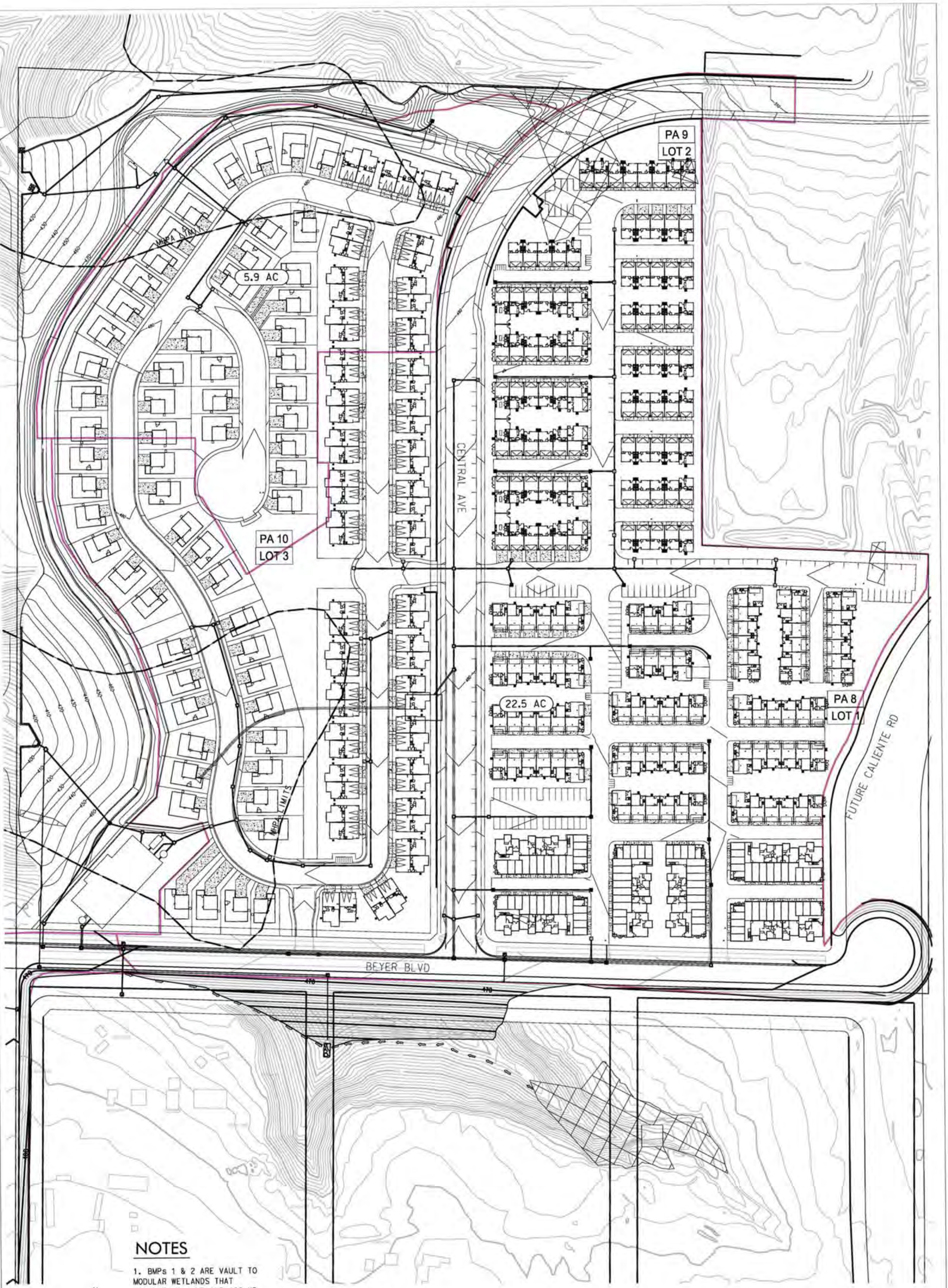

NOTES

1. BMPs 1 & 2 ARE VAULT TO MODULAR WETLANDS THAT PROVIDE WQ, HMP AND 100-YR DETENTION FOR DMAs 1 & 2 RESPECTIVELY.

2. REFER TO NOTES ON PRIOR PAGE

60 30 0 60 120 180

GRAPHIC SCALE 1" = 60'

LEGEND

◎	POC
DMA 1	DMA ID
(X.X AC.)	BASIN AREA
—	DMA BOUNDARY
▨	PCCSYA

NOT FOR CONSTRUCTION - EXHIBIT FOR PDPSWQMP ONLY

DMA AND HMP EXHIBIT
SOUTHWEST VILLAGE VTM

PA 7-10
Sheet 3 of 3
April 28, 2023
J-15013-C

RICK
ENGINEERING COMPANY
San Diego
5620 FRIARS ROAD
SAN DIEGO, CA 92110
619-291-0707
(FAX) 619-291-4165
rickengineering.com
Riverside - Orange - Sacramento - San Luis Obispo - Phoenix - Tucson - Denver

J-15013-C

15013C
3/1/2022

TABULAR SUMMARY OF DMAs, SOUTHWEST VILLAGE

DMA ID	AREA (ACRES)	IMPERVIOUS AREA (ACRES)	%IMPERVIOUS	HSG	AREA WEIGHTED RUNOFF FACTOR	DCV (Cubic Feet)	TREATED BY	POLLUTANT CONTROL TYPE	DRAINS TO (POC ID)
Basin 100									
1	5.9	4.4	75%	D	0.75	7567	BMP 1	VAULT/MWS	1
SUM	**5.9**	**4.4**	**75%**		**0.75**	**7567**			
Basin 200									
2	22.5	16.9	75%	D	0.75	28802	BMP 2	VAULT/MWS	2
SUM	**22.5**	**16.9**	**75%**		**0.75**	**28802**			
BASIN 300									
3	36.8	27.6	75%	D	0.75	47083	BMP 3	VAULT/MWS	MC
SUM	**36.8**	**27.6**	**75%**		**0.75**	**47083**			
BASIN 1400									
14	12.6	10.1	80%	D	0.78	16790	BMP 14	BIOFILTRATION	MC
14-SM	24.8	0.0	0%	D	0.30	12676	N/A	N/A	MC
SUM	**37.4**	**10.1**	**27%**		**0.46**	**29466**			

SUMMARY OF DMA INFORMATION (MUST MATCH PROJECT DESCRIPTION AND SWQMP NARRATIVE)

NO OF TRAD DMA	TOTAL DMA AREA (ACRES)	TOTAL IMPERVIOUS AREA (ACRES)	% IMP		AREA WEIGHTED RUNOFF COEFFICIENT	TOTAL DCV (CUBIC FEET)	TOTAL AREA TREATED (ACRES)		NO. OF POCS
4	**77.8**	**59.0**	**76%**		**0.75**	**100243**	**77.8**		**3**

Worksheet B.3-1: Harvest and Use Feasibility Screening

Harvest and Use Feasibility Screening	Worksheet B.3-1

1. Is there a demand for harvested water (check all that apply) at the project site that is reliably present during the wet season?
   - ☒ Toilet and urinal flushing
   - ☒ Landscape irrigation
   - ☐ Other:____________

2. If there is a demand; estimate the anticipated average wet season demand over a period of 36 hours. Guidance for planning level demand calculations for toilet/urinal flushing and landscape irrigation is provided in Section B.3.2.
[Provide a summary of calculations here] TOILETS: ESTIMATE 4 RESIDENTS/UNIT

560 UNITS = 2,240 RESIDENTS

$$\rightarrow \frac{9.3\ \text{gallons}}{\text{Resident}\cdot 24\text{hr}} \times (2{,}240\ \text{Residents}) \times (36\ \text{hr.}) \times \left(\frac{1\ \text{ft}^3}{7.48\ \text{gal}}\right) = \boxed{4{,}177\ \text{ft}^3/36\ \text{hr.}}$$

IRRIGATION: ASSUME MODERATE PLANT WATER USE: 1,470 gallons/acre·36 hr.

[ASSUME 25 ACRES LANDSCAPING]

$$1{,}470\ \frac{\text{gallons}}{\text{acre}\cdot 36\text{hr.}} \times (25\ \text{acres}) = 36{,}750\ \frac{\text{gal}}{36\text{hr}} \times \left(\frac{1\ \text{ft}^3}{7.48\ \text{gal}}\right) = \boxed{4{,}913\ \frac{\text{ft}^3}{36\text{hr}}}$$

3. Calculate the DCV using worksheet B-2.1.
[Provide a results here]

$C = 0.75$

$d = 0.46$ inches

$A = 77.8$ acres

$$DCV = 3{,}630 \times C \times d \times A = 3{,}630 \times (0.75) \times (0.46\ \text{inches}) \times (77.8\ \text{acres})$$

$$\boxed{DCV = 97{,}433\ \text{ft}^3}$$

3a. Is the 36-hour demand greater than or equal to the DCV?	3b. Is the 36-hour demand greater than 0.25DCV but less than the full DCV?	3c. Is the 36-hour demand less than 0.25DCV?
Yes / ☑ No ⇨	Yes / ☑ No ⇨	Yes ☑
⇩	⇩	⇩
Harvest and use appears to be feasible. Conduct more detailed evaluation and sizing calculations to confirm that DCV can be used at an adequate rate to meet drawdown criteria.	Harvest and use may be feasible. Conduct more detailed evaluation and sizing calculations to determine feasibility. Harvest and use may only be able to be used for a portion of the site, or (optionally) the storage may need to be upsized to meet long term capture targets while draining in longer than 36 hours.	Harvest and use is considered to be infeasible.

Note: 36-hour demand calculations are for feasibility analysis only, once the feasibility analysis is complete the applicant may be allowed to use a different drawdown time provided they meet the 80 percent of average annual (long term) runoff volume performance standard.

Southwest Village
15013C-VTM
3/4/2022

POLLUTANT CONTROL WORKSHEETS

& ADDITIONAL BACKUP

FOR

BMP 1

Vault to Modular Wetlands

1. BMP Cross Section and Outlet Works Detail
2. B-5.2 – Sizing Method for Volume Retention Criteria
3. B-5.5 – Optimized Biofiltration Bmp Footprint When Downstream Of A Storage Vault
4. B-5.6 – Volume Retention For No Infiltration Condition
5. MWS Flow Based Sizing Worksheet
6. Rating And Storage Curve
7. Drawdown Calculation

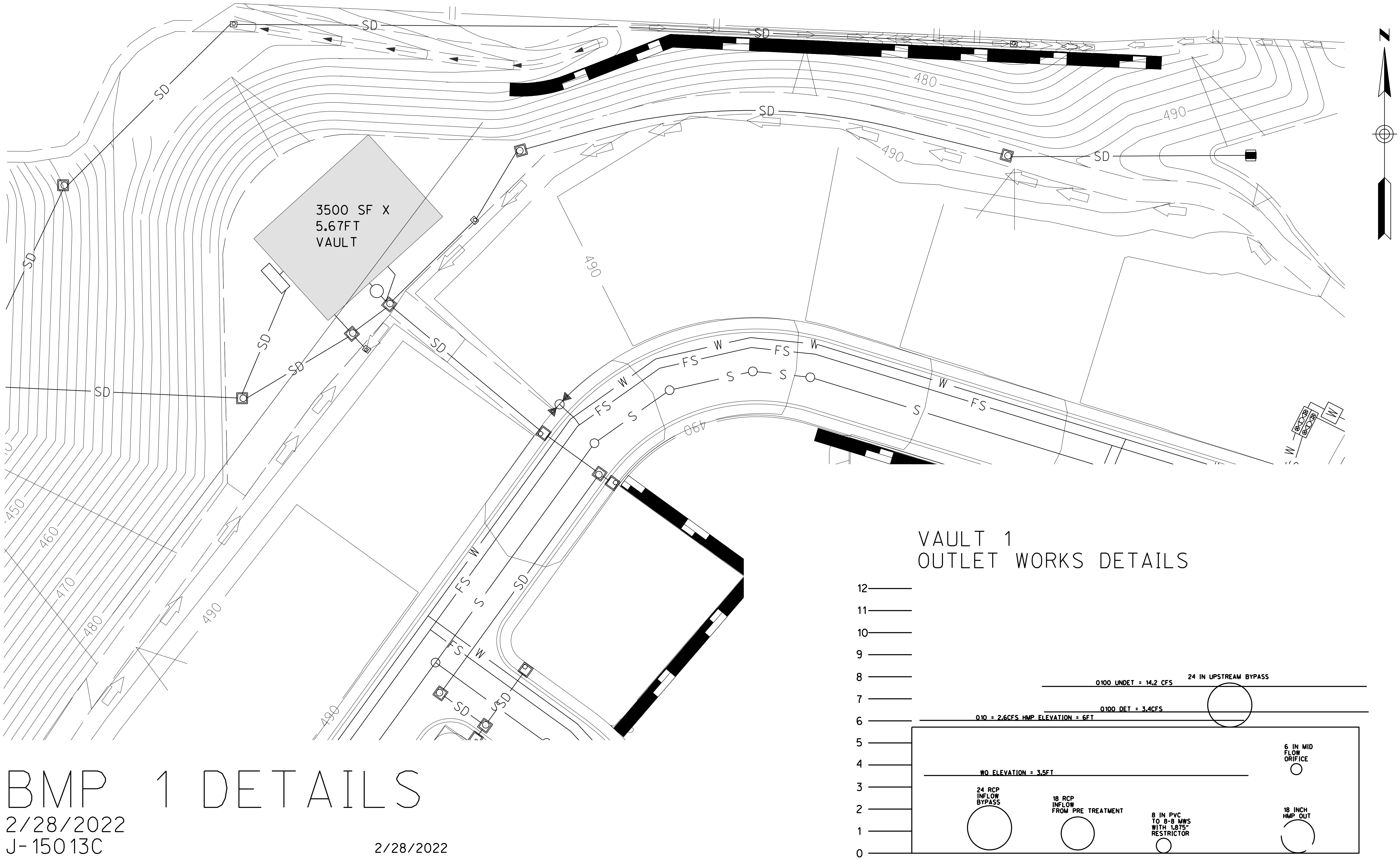

VAULT 1
OUTLET WORKS DETAILS

BMP 1 DETAILS

2/28/2022
J-15013C
NOT TO SCALE

2/28/2022
J-15013C
NOT TO SCALE

The City of SAN DIEGO	**Project Name**	Southwest Village - VTM
	BMP ID	BMP 1 - Vault to MWS
Sizing Method for Volume Retention Criteria		**Worksheet B.5 2**

1	Area draining to the BMP	257,807	sq. ft.
2	Adjusted runoff factor for drainage area (Refer to Appendix B.1 and B.2)	0.75	
3	85th percentile 24-hour rainfall depth	0.47	inches
4	Design capture volume [Line 1 x Line 2 x (Line 3/12)]	7573	cu. ft.
Volume Retention Requirement			
5	Measured infiltration rate in the DMA Note: When mapped hydrologic soil groups are used enter 0.10 for NRCS Type D soils and for NRCS Type C soils enter 0.30 When in no infiltration condition and the actual measured infiltration rate is unknown enter 0.0 if there are geotechnical and/or groundwater hazards identified in Appendix C	0	in/hr.
6	Factor of safety	2	
7	Reliable infiltration rate, for biofiltration BMP sizing [Line 5 / Line 6]	0	in/hr.
8	Average annual volume reduction target (Figure B.5-2) When Line 7 > 0.01 in/hr. = Minimum (40, 166.9 x Line 7 +6.62) When Line 7 ≤ 0.01 in/hr. = 3.5%	3.5	%
9	Fraction of DCV to be retained (Figure B.5-3) When Line 8 > 8% = $0.0000013 \times \text{Line } 8^3 - 0.000057 \times \text{Line } 8^2 + 0.0086 \times \text{Line } 8 - 0.014$ When Line 8 ≤ 8% = 0.023	0.023	
10	Target volume retention [Line 9 x Line 4]	174	cu. ft.

The City of SAN DIEGO

Project Name	Southwest Village - VTM
BMP ID	BMP 1 - Vault to MWS

Optimized Biofiltration BMP Footprint when Downstream of a Storage Unit

Worksheet B.5-5

1	Area draining to the storage unit and biofiltration BMP	257,807	sq. ft.
2	Adjusted runoff factor for drainage area (Refer to Appendix B.1 and B.2)	0.75	
3	Effective impervious area draining to the storage unit and biofiltration BMP [Line 1 x Line 2]	193355.25	sq. ft.
4	Remaining DCV after implementing retention BMPs	7573	cu. ft.
5	Design infiltration rate (measured infiltration rate / 2)	0	ft./hr.
6	Media thickness [1.5 feet minimum], also add mulch layer and washed ASTM 33 fine aggregate sand thickness to this line for sizing calculations	0	ft.
7	Media filtration rate to be used for sizing (0.42 ft/hr. with no outlet control; if the filtration rate is controlled by the outlet use the outlet controlled rate)	0.42	ft./hr.
8	Media retained pore space	0.05	in/in
Storage Unit Requirement			
9	Drawdown time of the storage unit, minimum(from the elevation that bypasses the biofiltration BMP, overflow elevation)	20.92	hours
10	Storage required to achieve greater than 92 percent capture (see Table B.5-5)	1.147333333	fraction
11	Storage required in cubic feet (Line 4 x Line 10)	8688.847837	cu. ft.
12	Storage provided in the design, minimum(from the elevation that bypasses the biofiltration BMP, overflow elevation)	10939	cu. ft.
13	Is Line 12 ≥ Line 11?	Storage Requirement is Met	
Criteria 1: BMP Footprint Biofiltration Capacity			
14	Peak flow from the storage unit to the biofiltration BMP (using the elevation used to evaluate the percent capture)	0.19	cfs
15	Required biofiltration footprint [(3,600 x Line 14)/Line 7]	1629	sq. ft.
Criteria 2: Alternative Minimum Sizing Factor (Clogging)			
16	Alternative Minimum Footprint Sizing Factor [Line 11 of Worksheet B.5-4]	0.0189072	fraction
17	Required biofiltration footprint [Line 3 x Line 16]	3656	sq. ft.
Criteria 3: Retention requirement [Not applicable for No Infiltration Condition]			
18	Retention Target (Line 10 in Worksheet B.5-2)		cu. ft.
19	Average discharge rate from the storage unit to the biofiltration BMP		cfs
20	Depth retained in the optimized biofiltration BMP {Line 6 x Line 8} + {[(Line 4)/(2400 x Line 19)] x Line 5}	0	ft
21	Required optimized biofiltration footprint (Line 18/Line 20)	0	sq. ft.
Optimized Biofiltration Footprint			
22	Optimized biofiltration footprint, maximum(Line 15, Line 17, Line 21)	3656	sq. ft.

The City of SAN DIEGO

Project Name	Southwest Village - VTM
BMP ID	BMP 1 - Vault to MWS

Volume Retention for No Infiltration Condition — Worksheet B.5 6

1	Area draining to the biofiltration BMP	257,807	sq. ft.
2	Adjusted runoff factor for drainage area (Refer to Appendix B.1 and B.2)	0.75	
3	Effective impervious area draining to the BMP [Line 1 x Line 2]	193355	sq. ft.
4	Required area for Evapotranspiration [Line 3 x 0.03]	5801	sq. ft.
5	Biofiltration BMP Footprint	0	sq. ft.

Landscape Area (must be identified on DS-3247)

	Identification	1	2	3	4	5
6	Landscape area that meet the requirements in SD-B and SD-F Fact Sheet (sq. ft.)	5801				
7	Impervious area draining to the landscape area (sq. ft.)	8701.5				
8	Impervious to Pervious Area ratio [Line 7/Line 6]	1.50	0.00	0.00	0.00	0.00
9	Effective Credit Area If (Line 8 >1.5, Line 6, Line 7/1.5]	5801	0	0	0	0

10	Sum of Landscape area [sum of Line 9 Id's 1 to 5]	5801	sq. ft.
11	Provided footprint for evapotranspiration [Line 5 + Line 10]	5801	sq. ft.

Volume Retention Performance Standard

12	Is Line 11 ≥ Line 4?	Volume Retention Performance Standard is Met	
13	Fraction of the performance standard met through the BMP footprint and/or landscaping [Line 11/Line 4]	1	
14	Target Volume Retention [Line 10 from Worksheet B.5.2]	174	cu. ft.
15	Volume retention required from other site design BMPs [(1-Line 13) x Line 14]	0	cu. ft.

Site Design BMP

	Identification	Site Design Type	Credit	
16	1			cu. ft.
	2			cu. ft.
	3			cu. ft.
	4			cu. ft.
	5			cu. ft.
	Sum of volume retention benefits from other site design BMPs (e.g. trees; rain barrels etc.). [sum of Line 16 Credits for Id's 1 to 5] Provide documentation of how the site design credit is calculated in the PDP SWQMP.		0	cu. ft.
17	Is Line 16 ≥ Line 15?	Volume Retention Performance Standard is Met		

MWS Linear | *Sizing Options*

Flow Based Sizing

The MWS Linear can be used in stand alone applications to meet treatment flow requirements. Since the MWS Linear is the only biofiltration system that can accept inflow pipes several feet below the surface it can be used not only in decentralized design applications but also as a large central end-of-the-line application for maximum feasibility.

Model #	Dimensions	WetlandMEDIA Surface Area	Treatment Flow Rate (cfs)
MWS-L-4-4	4′ x 4′	23 sq. ft.	0.052
MWS-L-4-6	4′ x 6′	32 sq. ft.	0.073
MWS-L-4-8	4′ x 8′	50 sq. ft.	0.115
MWS-L-4-13	4′ x 13′	63 sq. ft.	0.144
MWS-L-4-15	4′ x 15′	76 sq. ft.	0.175
MWS-L-4-17	4′ x 17′	90 sq. ft.	0.206
MWS-L-4-19	4′ x 19′	103 sq. ft.	0.237
MWS-L-4-21	4′ x 21′	117 sq. ft.	0.268
MWS-L-6-8	7′ x 9′	64 sq. ft.	0.147
MWS-L-8-8	8′ x 8′	100 sq. ft.	0.230
MWS-L-8-12	8′ x 12′	151 sq. ft.	0.346
MWS-L-8-16	8′ x 16′	201 sq. ft.	0.462
MWS-L-8-20	9′ x 21′	252 sq. ft.	0.577
MWS-L-8-24	9′ x 25′	302 sq. ft.	0.693

MWS-L-8-8 HAS BEEN SELECTED FOR BMP 1B DESIGN. THE MAXIMUM TREATMENT FLOW RATE OF 0.230 CFS IS GREATER THAN 0.19 CFS, THE MAXIMUM REGULATED OUTFLOW FROM THE STORM TRAP UNIT 1A.

Southwest Village
15013C
2/28/2022

	STORAGE		DISCHARGE	CALCULATED DRAWDOWN TIME	
h (ft)	Incremental storage volume (ft3)	Cumulative storage volume (ft3)	Total Flow (cfs)	Incremental Drawdown Time (hr)	Cumulative Drawdown Time (hr)
0.000	0	0	0.089	0.00	0.00
0.050	12	12	0.091	0.04	0.04
0.100	35	47	0.093	0.11	0.14
0.150	59	106	0.096	0.17	0.32
0.200	82	188	0.098	0.24	0.55
0.250	106	294	0.100	0.30	0.85
0.300	129	423	0.102	0.36	1.20
0.350	153	576	0.104	0.41	1.62
3.250	165	10,117	0.189	0.24	19.72
3.300	165	10,281	0.190	0.24	19.97
3.350	165	10,446	0.191	0.24	20.21
3.400	164	10,610	0.192	0.24	20.45
3.450	165	10,775	0.193	0.24	20.68
3.500	165	10,939	0.194	0.24	20.92
3.550	165	11,104	0.204	0.23	21.15
3.600	165	11,268	0.220	0.22	21.36
3.650	164	11,433	0.241	0.20	21.56
5.200	165	16,532	1.367	0.03	23.43
5.250	165	16,697	1.387	0.03	23.47
5.300	165	16,861	1.407	0.03	23.50
5.350	165	17,026	1.427	0.03	23.53
5.400	165	17,190	1.447	0.03	23.56
5.450	165	17,355	1.466	0.03	23.59
5.500	164	17,519	1.485	0.03	23.63
5.550	164	17,684	1.503	0.03	23.66
5.600	165	17,848	1.522	0.03	23.69
5.650	165	18,013	1.540	0.03	23.72

Draw Down Times	Bottom Basin	Top Elevation	DrawDown (hr)
WQ	0.00	3.50	20.92
HMP	0.00	5.65	23.72

BMP Rating and Storage Table

STAGE		STORAGE		DISCHARGE			
h (ft) Above Underdrain	h (ft) Above BB	Incremental storage volume (ft^3)	Cumulative storage volume (ft^3)	Low-flow Orifice 1.875" (cfs)	Mid-flow Orifice 6" (cfs)	Primary Overflow 24" RCP (cfs)	Total Flow (cfs)
0.00	0.00	0	0	0.089	0.000	0.000	0.089
0.05	0.05	12	12	0.091	0.000	0.000	0.091
0.10	0.10	35	47	0.093	0.000	0.000	0.093
0.15	0.15	59	106	0.096	0.000	0.000	0.096
0.20	0.20	82	188	0.098	0.000	0.000	0.098
0.25	0.25	106	294	0.100	0.000	0.000	0.100
0.30	0.30	129	423	0.102	0.000	0.000	0.102
0.35	0.35	153	576	0.104	0.000	0.000	0.104
0.40	0.40	165	740	0.106	0.000	0.000	0.106
0.45	0.45	165	905	0.108	0.000	0.000	0.108
0.50	0.50	165	1,069	0.110	0.000	0.000	0.110
5.00	5.00	165	15,874	0.225	1.057	0.000	1.282
5.05	5.05	165	16,039	0.226	1.078	0.000	1.304
5.10	5.10	165	16,203	0.227	1.098	0.000	1.325
5.15	5.15	165	16,368	0.228	1.119	0.000	1.346
5.20	5.20	165	16,532	0.228	1.138	0.000	1.367
5.25	5.25	165	16,697	0.229	1.158	0.000	1.387
5.30	5.30	165	16,861	0.230	1.177	0.000	1.407
5.35	5.35	165	17,026	0.231	1.196	0.000	1.427
5.40	5.40	165	17,190	0.232	1.214	0.000	1.447
5.45	5.45	165	17,355	0.233	1.233	0.000	1.466
5.50	5.50	164	17,519	0.234	1.251	0.000	1.485
5.55	5.55	164	17,684	0.235	1.268	0.000	1.503
5.60	5.60	165	17,848	0.236	1.286	0.000	1.522
5.65	5.65	165	18,013	0.237	1.303	0.000	1.540
5.70	5.70	165	18,177	0.238	1.320	0.031	1.589
5.75	5.75	164	18,342	0.238	1.337	0.136	1.711
5.80	5.80	164	18,506	0.239	1.354	0.281	1.874
5.85	5.85	165	18,671	0.240	1.370	0.458	2.069
5.90	5.90	165	18,835	0.241	1.386	0.662	2.289
5.95	5.95	165	19,000	0.242	1.402	0.889	2.533
6.00	6.00	164	19,164	0.243	1.418	1.137	2.798

POLLUTANT CONTROL WORKSHEETS

FOR

BMP 2

Vault to Modular Wetlands

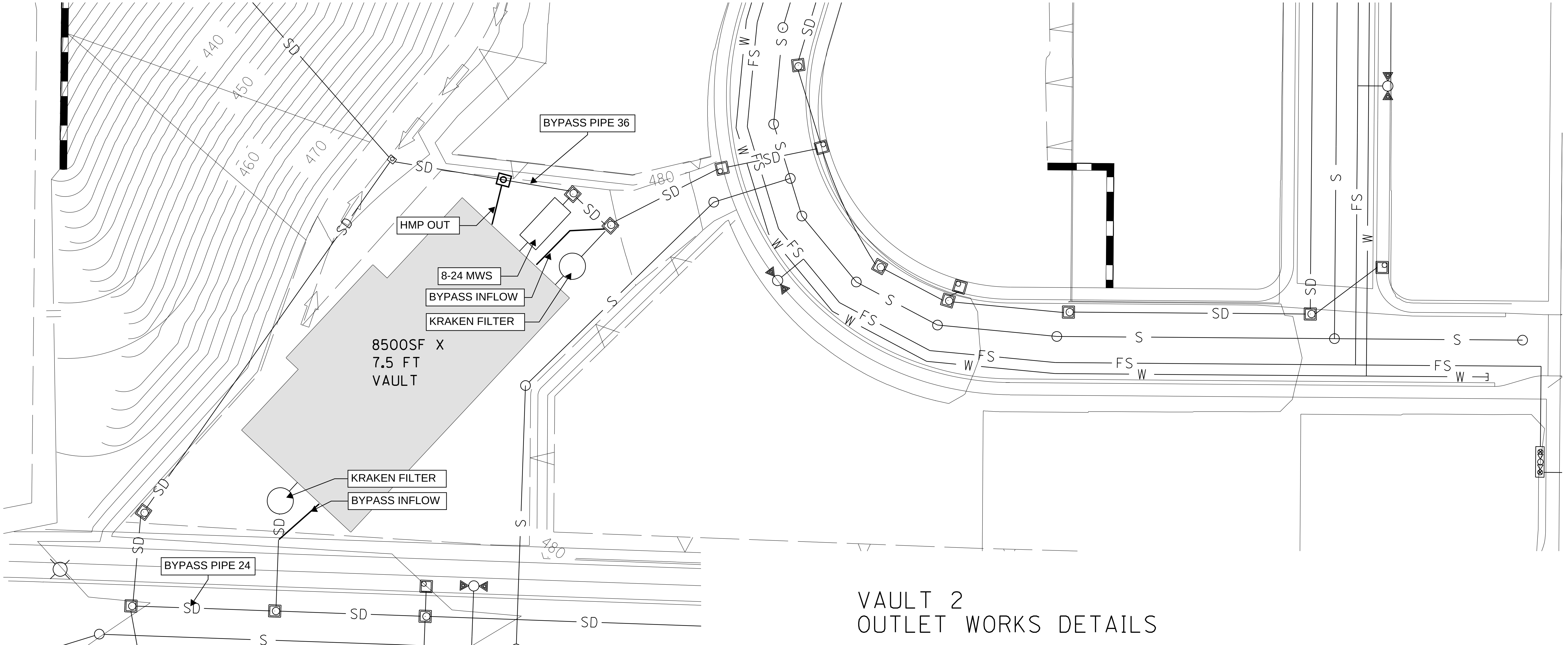

VAULT 2
OUTLET WORKS DETAILS

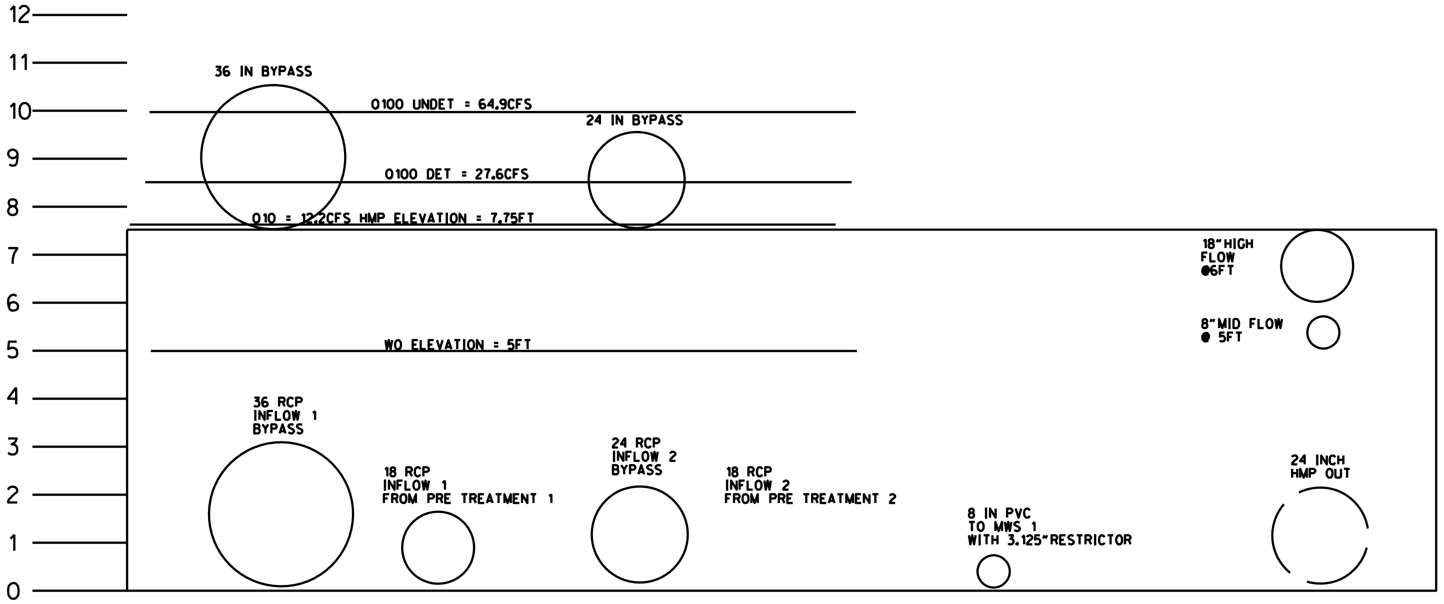

BMP 2 DETAILS

2/28/2022
J-15013C
NOT TO SCALE

The City of SAN DIEGO

	Project Name	Southwest Village - VTM	
	BMP ID	BMP 2 - Vault to MWS	
	Sizing Method for Volume Retention Criteria	**Worksheet B.5 2**	
1	Area draining to the BMP	980,507	sq. ft.
2	Adjusted runoff factor for drainage area (Refer to Appendix B.1 and B.2)	0.75	
3	85th percentile 24-hour rainfall depth	0.47	inches
4	Design capture volume [Line 1 x Line 2 x (Line 3/12)]	28802	cu. ft.
Volume Retention Requirement			
5	Measured infiltration rate in the DMA Note: When mapped hydrologic soil groups are used enter 0.10 for NRCS Type D soils and for NRCS Type C soils enter 0.30 When in no infiltration condition and the actual measured infiltration rate is unknown enter 0.0 if there are geotechnical and/or groundwater hazards identified in Appendix C	0	in/hr.
6	Factor of safety	2	
7	Reliable infiltration rate, for biofiltration BMP sizing [Line 5 / Line 6]	0	in/hr.
8	Average annual volume reduction target (Figure B.5-2) When Line 7 > 0.01 in/hr. = Minimum (40, 166.9 x Line 7 +6.62) When Line 7 ≤ 0.01 in/hr. = 3.5%	3.5	%
9	Fraction of DCV to be retained (Figure B.5-3) When Line 8 > 8% = 0.0000013 x Line 8^3 - 0.000057 x Line 8^2 + 0.0086 x Line 8 - 0.014 When Line 8 ≤ 8% = 0.023	0.023	
10	Target volume retention [Line 9 x Line 4]	662	cu. ft.

The City of SAN DIEGO

Project Name	Southwest Village - VTM
BMP ID	BMP 2 - Vault to MWS

Optimized Biofiltration BMP Footprint when Downstream of a Storage Unit

Worksheet B.5-5

1	Area draining to the storage unit and biofiltration BMP	980,507	sq. ft.
2	Adjusted runoff factor for drainage area (Refer to Appendix B.1 and B.2)	0.75	
3	Effective impervious area draining to the storage unit and biofiltration BMP [Line 1 x Line 2]	735380.25	sq. ft.
4	Remaining DCV after implementing retention BMPs	28802	cu. ft.
5	Design infiltration rate (measured infiltration rate / 2)	0	ft./hr.
6	Media thickness [1.5 feet minimum], also add mulch layer and washed ASTM 33 fine aggregate sand thickness to this line for sizing calculations	0	ft.
7	Media filtration rate to be used for sizing (0.42 ft/hr. with no outlet control; if the filtration rate is controlled by the outlet use the outlet controlled rate)	0.42	ft./hr.
8	Media retained pore space	0.05	in/in
Storage Unit Requirement			
9	Drawdown time of the storage unit, minimum(from the elevation that bypasses the biofiltration BMP, overflow elevation)	24	hours
10	Storage required to achieve greater than 92 percent capture (see Table B.5-5)	1.25	fraction
11	Storage required in cubic feet (Line 4 x Line 10)	36002.99141	cu. ft.
12	Storage provided in the design, minimum(from the elevation that bypasses the biofiltration BMP, overflow elevation)	38852	cu. ft.
13	Is Line 12 ≥ Line 11?	Storage Requirement is Met	
Criteria 1: BMP Footprint Biofiltration Capacity			
14	Peak flow from the storage unit to the biofiltration BMP (using the elevation used to evaluate the percent capture)	0.62	cfs
15	Required biofiltration footprint [(3,600 x Line 14)/Line 7]	5314	sq. ft.
Criteria 2: Alternative Minimum Sizing Factor (Clogging)			
16	Alternative Minimum Footprint Sizing Factor [Line 11 of Worksheet B.5-4]	0.0189072	fraction
17	Required biofiltration footprint [Line 3 x Line 16]	13904	sq. ft.
Criteria 3: Retention requirement [Not applicable for No Infiltration Condition]			
18	Retention Target (Line 10 in Worksheet B.5-2)		cu. ft.
19	Average discharge rate from the storage unit to the biofiltration BMP		cfs
20	Depth retained in the optimized biofiltration BMP {Line 6 x Line 8} + {[(Line 4)/(2400 x Line 19)] x Line 5}	0	ft
21	Required optimized biofiltration footprint (Line 18/Line 20)	0	sq. ft.
Optimized Biofiltration Footprint			
22	Optimized biofiltration footprint, maximum(Line 15, Line 17, Line 21)	13904	sq. ft.

The City *of*
SAN DIEGO

Project Name	Southwest Village - VTM
BMP ID	BMP 2 - Vault to MWS

Volume Retention for No Infiltration Condition — Worksheet B.5 6

1	Area draining to the biofiltration BMP	980,507	sq. ft.
2	Adjusted runoff factor for drainage area (Refer to Appendix B.1 and B.2)	0.75	
3	Effective impervious area draining to the BMP [Line 1 x Line 2]	735380	sq. ft.
4	Required area for Evapotranspiration [Line 3 x 0.03]	22061	sq. ft.
5	Biofiltration BMP Footprint	0	sq. ft.

Landscape Area (must be identified on DS-3247)

	Identification	1	2	3	4	5
6	Landscape area that meet the requirements in SD-B and SD-F Fact Sheet (sq. ft.)	22100				
7	Impervious area draining to the landscape area (sq. ft.)	33150				
8	Impervious to Pervious Area ratio [Line 7/Line 6]	1.50	0.00	0.00	0.00	0.00
9	Effective Credit Area If (Line 8 >1.5, Line 6, Line 7/1.5]	22100	0	0	0	0

10	Sum of Landscape area [sum of Line 9 Id's 1 to 5]	22100	sq. ft.
11	Provided footprint for evapotranspiration [Line 5 + Line 10]	22100	sq. ft.

Volume Retention Performance Standard

12	Is Line 11 ≥ Line 4?	Volume Retention Performance Standard is Met	
13	Fraction of the performance standard met through the BMP footprint and/or landscaping [Line 11/Line 4]	1	
14	Target Volume Retention [Line 10 from Worksheet B.5.2]	662	cu. ft.
15	Volume retention required from other site design BMPs [(1-Line 13) x Line 14]	0	cu. ft.

Site Design BMP

	Identification	Site Design Type	Credit	
16	1			cu. ft.
	2			cu. ft.
	3			cu. ft.
	4			cu. ft.
	5			cu. ft.
	Sum of volume retention benefits from other site design BMPs (e.g. trees; rain barrels etc.). [sum of Line 16 Credits for Id's 1 to 5] Provide documentation of how the site design credit is calculated in the PDP SWQMP.		0	cu. ft.
17	Is Line 16 ≥ Line 15?	Volume Retention Performance Standard is Met		

MWS Linear | *Sizing Options*

Flow Based Sizing

The MWS Linear can be used in stand alone applications to meet treatment flow requirements. Since the MWS Linear is the only biofiltration system that can accept inflow pipes several feet below the surface it can be used not only in decentralized design applications but also as a large central end-of-the-line application for maximum feasibility.

MWS-L-4-4	4′ x 4′	23 sq. ft.	0.052
MWS-L-4-6	4′ x 6′	32 sq. ft.	0.073
MWS-L-4-8	4′ x 8′	50 sq. ft.	0.115
MWS-L-4-13	4′ x 13′	63 sq. ft.	0.144
MWS-L-4-15	4′ x 15′	76 sq. ft.	0.175
MWS-L-4-17	4′ x 17′	90 sq. ft.	0.206
MWS-L-4-19	4′ x 19′	103 sq. ft.	0.237
MWS-L-4-21	4′ x 21′	117 sq. ft.	0.268
MWS-L-6-8	7′ x 9′	64 sq. ft.	0.147
MWS-L-8-8	8′ x 8′	100 sq. ft.	0.230
MWS-L-8-12	8′ x 12′	151 sq. ft.	0.346
MWS-L-8-16	8′ x 16′	201 sq. ft.	0.462
MWS-L-8-20	9′ x 21′	252 sq. ft.	0.577
MWS-L-8-24	9′ x 25′	302 sq. ft.	0.693

MWS-L-8-24 HAS BEEN SELECTED FOR BMP 1B DESIGN. THE MAXIMUM TREATMENT FLOW RATE OF 0.69 CFS IS GREATER THAN 0.62 CFS, THE MAXIMUM REGULATED OUTFLOW FROM THE STORM TRAP UNIT 1A.

Southwest Village
15013C
2/28/2022

				CALCULATED	
	STORAGE		DISCHARGE	DRAWDOWN TIME	
h (ft)	Incremental storage volume (ft3)	Cumulative storage volume (ft3)	Total Flow (cfs)	Incremental Drawdown Time (hr)	Cumulative Drawdown Time (hr)
0.000	0	0	0.239	0.00	0.00
0.050	16	16	0.246	0.02	0.02
0.100	48	63	0.253	0.05	0.07
0.150	79	143	0.259	0.09	0.16
0.200	111	254	0.265	0.12	0.28
0.250	143	397	0.271	0.15	0.42
4.450	416	34,279	0.592	0.20	21.90
4.500	416	34,694	0.594	0.19	22.09
4.550	416	35,110	0.597	0.19	22.29
4.600	416	35,526	0.600	0.19	22.48
4.650	416	35,942	0.603	0.19	22.67
4.700	416	36,357	0.605	0.19	22.86
4.750	416	36,773	0.608	0.19	23.05
4.800	416	37,189	0.611	0.19	23.24
4.850	416	37,605	0.613	0.19	23.43
4.900	416	38,020	0.616	0.19	23.62
4.950	416	38,436	0.619	0.19	23.81
5.000	416	38,852	0.621	0.19	23.99
5.050	416	39,268	0.635	0.18	24.18
5.100	416	39,683	0.658	0.18	24.36
5.150	416	40,099	0.687	0.17	24.53
5.200	416	40,515	0.721	0.16	24.69
5.250	416	40,931	0.759	0.16	24.85
5.300	416	41,346	0.801	0.15	25.00
5.350	416	41,762	0.857	0.14	25.13
5.400	416	42,178	1.076	0.12	25.25
5.450	416	42,594	1.219	0.10	25.35
5.500	416	43,009	1.333	0.09	25.45
5.550	416	43,425	1.432	0.08	25.53
5.600	416	43,841	1.520	0.08	25.61
5.650	416	44,257	1.601	0.07	25.68
5.700	416	44,672	1.675	0.07	25.75
5.750	416	45,088	1.745	0.07	25.82
5.800	416	45,504	1.811	0.06	25.88
5.850	416	45,920	1.873	0.06	25.95

Draw Down Times	Bottom Basin	Top Elevation	DrawDown (hr)
WQ	0.00	5.00	23.99
HMP	0.00	7.50	26.96

Southwest Village
15013C
2/28/2022

BMP Rating and Storage Table

STAGE		STORAGE		DISCHARGE				
h (ft) Above Underdrain	h (ft) Above BB	Incremental storage volume (ft^3)	Cumulative storage volume (ft^3)	Low-flow Orifice 3.125" (cfs)	Mid-flow Orifice 8" (cfs)	High Flow Outlet 18" RCP (cfs)	Primary Overflow 42" RCP (cfs)	Total Flow (cfs)
0.00	0.00	0	0	0.239	0.000	0.000	0.000	0.239
0.05	0.05	16	16	0.246	0.000	0.000	0.000	0.246
0.10	0.10	48	63	0.253	0.000	0.000	0.000	0.253
0.15	0.15	79	143	0.259	0.000	0.000	0.000	0.259
0.20	0.20	111	254	0.265	0.000	0.000	0.000	0.265
0.25	0.25	143	397	0.271	0.000	0.000	0.000	0.271
4.65	4.65	416	35,942	0.603	0.000	0.000	0.000	0.603
4.70	4.70	416	36,357	0.605	0.000	0.000	0.000	0.605
4.75	4.75	416	36,773	0.608	0.000	0.000	0.000	0.608
4.80	4.80	416	37,189	0.611	0.000	0.000	0.000	0.611
4.85	4.85	416	37,605	0.613	0.000	0.000	0.000	0.613
4.90	4.90	416	38,020	0.616	0.000	0.000	0.000	0.616
4.95	4.95	416	38,436	0.619	0.000	0.000	0.000	0.619
5.00	5.00	416	38,852	0.621	0.000	0.000	0.000	0.621
5.05	5.05	416	39,268	0.624	0.011	0.000	0.000	0.635
5.10	5.10	416	39,683	0.627	0.032	0.000	0.000	0.658
5.15	5.15	416	40,099	0.629	0.058	0.000	0.000	0.687
5.20	5.20	416	40,515	0.632	0.089	0.000	0.000	0.721
5.25	5.25	416	40,931	0.634	0.125	0.000	0.000	0.759
5.30	5.30	416	41,346	0.637	0.164	0.000	0.000	0.801
5.35	5.35	416	41,762	0.640	0.217	0.000	0.000	0.857
5.40	5.40	416	42,178	0.642	0.434	0.000	0.000	1.076
5.45	5.45	416	42,594	0.645	0.574	0.000	0.000	1.219
5.50	5.50	416	43,009	0.647	0.686	0.000	0.000	1.333
5.55	5.55	416	43,425	0.650	0.782	0.000	0.000	1.432
5.60	5.60	416	43,841	0.652	0.868	0.000	0.000	1.520
5.65	5.65	416	44,257	0.655	0.946	0.000	0.000	1.601
5.70	5.70	416	44,672	0.657	1.018	0.000	0.000	1.675
5.75	5.75	416	45,088	0.660	1.085	0.000	0.000	1.745
5.80	5.80	416	45,504	0.662	1.148	0.000	0.000	1.811
5.85	5.85	416	45,920	0.665	1.208	0.000	0.000	1.873
5.90	5.90	416	46,335	0.667	1.265	0.000	0.000	1.932
5.95	5.95	416	46,751	0.670	1.320	0.000	0.000	1.990
6.00	6.00	416	47,167	0.672	1.372	0.000	0.000	2.045
6.05	6.05	416	47,583	0.675	1.423	0.025	0.000	2.123
6.10	6.10	416	47,998	0.677	1.472	0.071	0.000	2.220
6.15	6.15	416	48,414	0.679	1.519	0.131	0.000	2.329
6.20	6.20	416	48,830	0.682	1.565	0.201	0.000	2.448
6.25	6.25	416	49,246	0.684	1.609	0.281	0.000	2.575
6.30	6.30	416	49,661	0.687	1.652	0.370	0.000	2.709
6.35	6.35	416	50,077	0.689	1.695	0.466	0.000	2.850
6.40	6.40	416	50,493	0.691	1.736	0.569	0.000	2.997
6.45	6.45	416	50,909	0.694	1.776	0.679	0.000	3.149
6.50	6.50	416	51,324	0.696	1.815	0.795	0.000	3.307

Southwest Village
15013C-VTM
3/4/2022

POLLUTANT CONTROL WORKSHEETS AND ADDITIONAL BACKUP

FOR

BMP 3

Vault to Modular Wetlands

1. BMP Cross Section and Outlet Works Detail
2. B-5.2 – Sizing Method for Volume Retention Criteria
3. B-5.5 – Optimized Biofiltration Bmp Footprint When Downstream Of A Storage Vault
4. B-5.6 – Volume Retention For No Infiltration Condition
5. MWS Flow Based Sizing Worksheet
6. Rating And Storage Curve
7. Drawdown Calculation

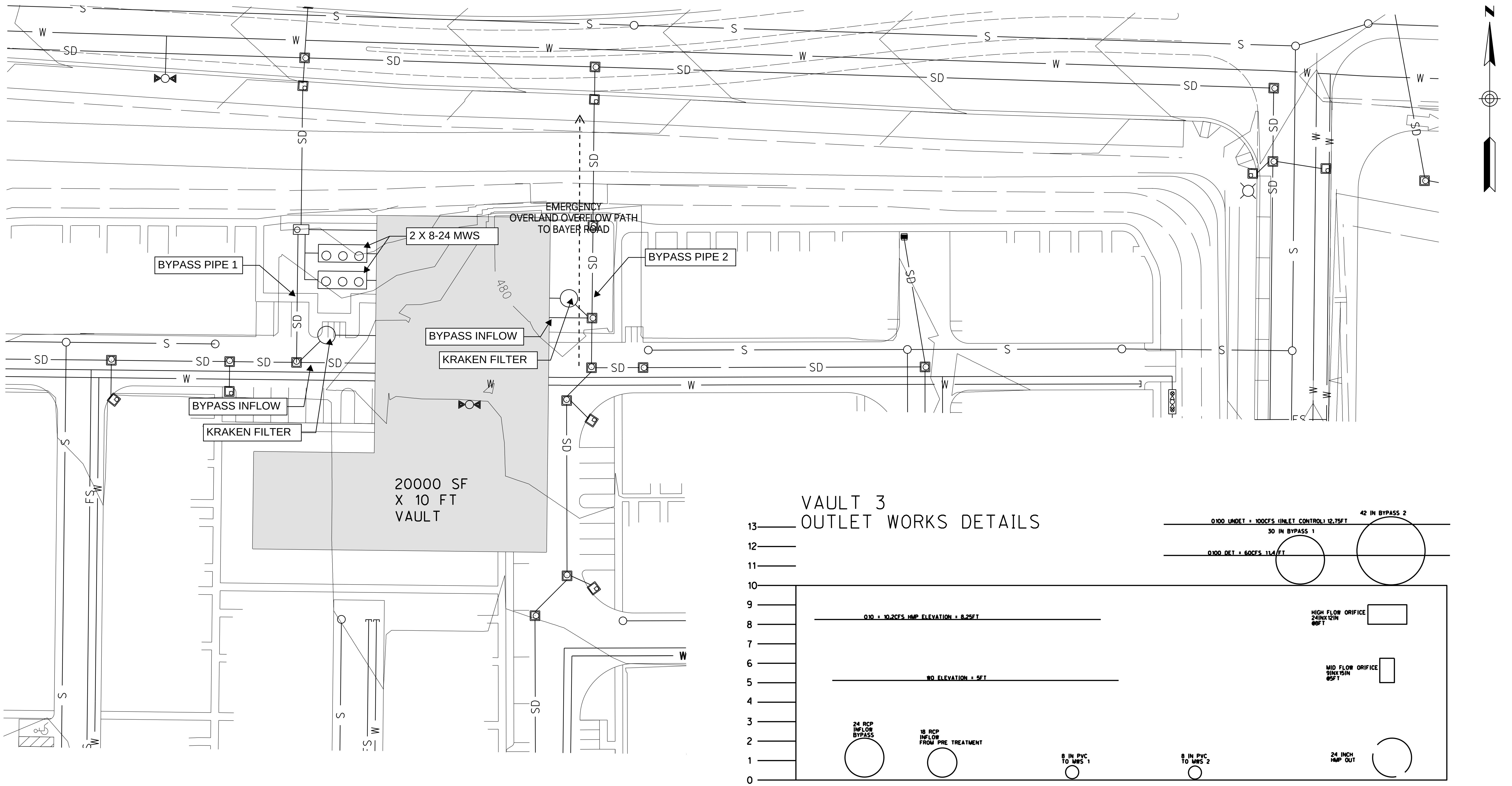

BMP 3 DETAILS

2/28/2022
J-15013C
NOT TO SCALE

The City of SAN DIEGO

Project Name	Southwest Village - VTM		
BMP ID	BMP 3 - Vault to MWS		
Sizing Method for Volume Retention Criteria	**Worksheet B.5 2**		
1	Area draining to the BMP	1,602,829	sq. ft.
2	Adjusted runoff factor for drainage area (Refer to Appendix B.1 and B.2)	0.75	
3	85th percentile 24-hour rainfall depth	0.47	inches
4	Design capture volume [Line 1 x Line 2 x (Line 3/12)]	47083	cu. ft.
Volume Retention Requirement			
5	Measured infiltration rate in the DMA Note: When mapped hydrologic soil groups are used enter 0.10 for NRCS Type D soils and for NRCS Type C soils enter 0.30 When in no infiltration condition and the actual measured infiltration rate is unknown enter 0.0 if there are geotechnical and/or groundwater hazards identified in Appendix C	0	in/hr.
6	Factor of safety	2	
7	Reliable infiltration rate, for biofiltration BMP sizing [Line 5 / Line 6]	0	in/hr.
8	Average annual volume reduction target (Figure B.5-2) When Line 7 > 0.01 in/hr. = Minimum (40, 166.9 x Line 7 +6.62) When Line 7 ≤ 0.01 in/hr. = 3.5%	3.5	%
9	Fraction of DCV to be retained (Figure B.5-3) When Line 8 > 8% = 0.0000013 x Line 8^3 - 0.000057 x Line 8^2 + 0.0086 x Line 8 - 0.014 When Line 8 ≤ 8% = 0.023	0.023	
10	Target volume retention [Line 9 x Line 4]	1083	cu. ft.

The City of SAN DIEGO

Project Name	Southwest Village - VTM
BMP ID	BMP 3 - Vault to MWS

Optimized Biofiltration BMP Footprint when Downstream of a Storage Unit

Worksheet B.5-5

1	Area draining to the storage unit and biofiltration BMP	1,602,829	sq. ft.
2	Adjusted runoff factor for drainage area (Refer to Appendix B.1 and B.2)	0.75	
3	Effective impervious area draining to the storage unit and biofiltration BMP [Line 1 x Line 2]	1202121.75	sq. ft.
4	Remaining DCV after implementing retention BMPs	47083	cu. ft.
5	Design infiltration rate (measured infiltration rate / 2)	0	ft./hr.
6	Media thickness [1.5 feet minimum], also add mulch layer and washed ASTM 33 fine aggregate sand thickness to this line for sizing calculations	0	ft.
7	Media filtration rate to be used for sizing (0.42 ft/hr. with no outlet control; if the filtration rate is controlled by the outlet use the outlet controlled rate)	0.42	ft./hr.
8	Media retained pore space	0.05	in/in
Storage Unit Requirement			
9	Drawdown time of the storage unit, minimum(from the elevation that bypasses the biofiltration BMP, overflow elevation)	20	hours
10	Storage required to achieve greater than 92 percent capture (see Table B.5-5)	1.116666667	fraction
11	Storage required in cubic feet (Line 4 x Line 10)	52576.13043	cu. ft.
12	Storage provided in the design, minimum(from the elevation that bypasses the biofiltration BMP, overflow elevation)	65213	cu. ft.
13	Is Line 12 ≥ Line 11?	Storage Requirement is Met	
Criteria 1: BMP Footprint Biofiltration Capacity			
14	Peak flow from the storage unit to the biofiltration BMP (using the elevation used to evaluate the percent capture)	1.24	cfs
15	Required biofiltration footprint [(3,600 x Line 14)/Line 7]	10629	sq. ft.
Criteria 2: Alternative Minimum Sizing Factor (Clogging)			
16	Alternative Minimum Footprint Sizing Factor [Line 11 of Worksheet B.5-4]	0.0189072	fraction
17	Required biofiltration footprint [Line 3 x Line 16]	22729	sq. ft.
Criteria 3: Retention requirement [Not applicable for No Infiltration Condition]			
18	Retention Target (Line 10 in Worksheet B.5-2)		cu. ft.
19	Average discharge rate from the storage unit to the biofiltration BMP		cfs
20	Depth retained in the optimized biofiltration BMP {Line 6 x Line 8} + {[(Line 4)/(2400 x Line 19)] x Line 5}	0	ft
21	Required optimized biofiltration footprint (Line 18/Line 20)	0	sq. ft.
Optimized Biofiltration Footprint			
22	Optimized biofiltration footprint, maximum(Line 15, Line 17, Line 21)	22729	sq. ft.

The City of SAN DIEGO

Project Name	Southwest Village - VTM
BMP ID	BMP 3 - Vault to MWS

Volume Retention for No Infiltration Condition — Worksheet B.5 6

1	Area draining to the biofiltration BMP	1,602,829	sq. ft.
2	Adjusted runoff factor for drainage area (Refer to Appendix B.1 and B.2)	0.75	
3	Effective impervious area draining to the BMP [Line 1 x Line 2]	1202122	sq. ft.
4	Required area for Evapotranspiration [Line 3 x 0.03]	36064	sq. ft.
5	Biofiltration BMP Footprint	0	sq. ft.

Landscape Area (must be identified on DS-3247)

	Identification	1	2	3	4	5
6	Landscape area that meet the requirements in SD-B and SD-F Fact Sheet (sq. ft.)	36064				
7	Impervious area draining to the landscape area (sq. ft.)	54096				
8	Impervious to Pervious Area ratio [Line 7/Line 6]	1.50	0.00	0.00	0.00	0.00
9	Effective Credit Area If (Line 8 >1.5, Line 6, Line 7/1.5]	36064	0	0	0	0

10	Sum of Landscape area [sum of Line 9 Id's 1 to 5]	36064	sq. ft.
11	Provided footprint for evapotranspiration [Line 5 + Line 10]	36064	sq. ft.

Volume Retention Performance Standard

12	Is Line 11 ≥ Line 4?	Volume Retention Performance Standard is Met	
13	Fraction of the performance standard met through the BMP footprint and/or landscaping [Line 11/Line 4]	1	
14	Target Volume Retention [Line 10 from Worksheet B.5.2]	1083	cu. ft.
15	Volume retention required from other site design BMPs [(1-Line 13) x Line 14]	0	cu. ft.

Site Design BMP

	Identification	Site Design Type	Credit	
16	1			cu. ft.
	2			cu. ft.
	3			cu. ft.
	4			cu. ft.
	5			cu. ft.
	Sum of volume retention benefits from other site design BMPs (e.g. trees; rain barrels etc.). [sum of Line 16 Credits for Id's 1 to 5] Provide documentation of how the site design credit is calculated in the PDP SWQMP.		0	cu. ft.
17	Is Line 16 ≥ Line 15?	Volume Retention Performance Standard is Met		

MWS Linear | *Sizing Options*

Flow Based Sizing

The MWS Linear can be used in stand alone applications to meet treatment flow requirements. Since the MWS Linear is the only biofiltration system that can accept inflow pipes several feet below the surface it can be used not only in decentralized design applications but also as a large central end-of-the-line application for maximum feasibility.

Model #	Dimensions	WetlandMEDIA Surface Area	Treatment Flow Rate (cfs)
MWS-L-4-4	4′ x 4′	23 sq. ft.	0.052
MWS-L-4-6	4′ x 6′	32 sq. ft.	0.073
MWS-L-4-8	4′ x 8′	50 sq. ft.	0.115
MWS-L-4-13	4′ x 13′	63 sq. ft.	0.144
MWS-L-4-15	4′ x 15′	76 sq. ft.	0.175
MWS-L-4-17	4′ x 17′	90 sq. ft.	0.206
MWS-L-4-19	4′ x 19′	103 sq. ft.	0.237
MWS-L-4-21	4′ x 21′	117 sq. ft.	0.268
MWS-L-6-8	7′ x 9′	64 sq. ft.	0.147
MWS-L-8-8	8′ x 8′	100 sq. ft.	0.230
MWS-L-8-12	8′ x 12′	151 sq. ft.	0.346
MWS-L-8-16	8′ x 16′	201 sq. ft.	0.462
MWS-L-8-20	9′ x 21′	252 sq. ft.	0.577
2X MWS-L-8-24	9′ x 25′	302 sq. ft.	0.693

TWO MWS-L-8-24 HAVE BEEN SELECTED FOR BMP 3B DESIGN. THE MAXIMUM COMBINED TREATMENT FLOW RATE OF 1.39 CFS IS GREATER THAN 1.24 CFS, THE MAXIMUM REGULATED OUTFLOW FROM THE STORM TRAP UNIT 3A.

Southwest Village
15013
2/28/2022

				CALCULATED	
	STORAGE		DISCHARGE	DRAWDOWN TIME	
h (ft)	Incremental storage volume (ft3)	Cumulative storage volume (ft3)	Total Flow (cfs)	Incremental Drawdown Time (hr)	Cumulative Drawdown Time (hr)
0.000	0	0	0.478	0.00	0.00
0.050	24	24	0.492	0.01	0.01
0.100	71	94	0.505	0.04	0.05
0.150	118	212	0.518	0.06	0.12
0.200	165	376	0.531	0.09	0.20
0.250	212	588	0.543	0.11	0.31
0.300	259	846	0.555	0.13	0.44
0.350	306	1,152	0.566	0.15	0.60
0.400	353	1,504	0.578	0.17	0.77
0.450	400	1,904	0.589	0.19	0.96
0.500	447	2,350	0.600	0.21	1.17
0.550	494	2,844	0.611	0.23	1.39
4.300	705	55,343	1.166	0.17	17.75
4.350	705	56,048	1.172	0.17	17.92
4.400	705	56,753	1.177	0.17	18.09
4.450	705	57,458	1.183	0.17	18.25
4.500	705	58,163	1.189	0.17	18.42
4.550	705	58,868	1.194	0.16	18.58
4.600	705	59,573	1.200	0.16	18.74
4.650	705	60,278	1.205	0.16	18.91
4.700	705	60,983	1.211	0.16	19.07
4.750	705	61,688	1.216	0.16	19.23
4.800	705	62,393	1.221	0.16	19.39
4.850	705	63,098	1.227	0.16	19.55
4.900	705	63,803	1.232	0.16	19.71
4.950	705	64,508	1.237	0.16	19.87
5.000	705	65,213	1.243	0.16	20.03
5.050	705	65,918	1.273	0.16	20.18
5.100	705	66,623	1.324	0.15	20.33
5.150	705	67,328	1.389	0.14	20.48
5.200	705	68,033	1.465	0.14	20.62
5.250	705	68,738	1.550	0.13	20.75
5.300	705	69,443	1.644	0.12	20.87
5.350	705	70,148	1.745	0.12	20.98
5.400	705	70,853	1.854	0.11	21.09
5.450	705	71,558	1.969	0.10	21.20
5.500	705	72,263	2.090	0.10	21.29
5.550	705	72,968	2.217	0.09	21.38
5.600	705	73,673	2.350	0.09	21.47
5.650	705	74,378	2.489	0.08	21.55
5.700	705	75,083	2.632	0.08	21.63
5.750	705	75,788	2.781	0.07	21.70
5.800	705	76,493	2.935	0.07	21.77
5.850	705	77,198	3.093	0.06	21.83
5.900	705	77,903	3.256	0.06	21.89
5.950	705	78,608	3.423	0.06	21.95
6.000	705	79,313	3.594	0.06	22.01

Draw Down Times	Bottom Basin	Top Elevation	DrawDown (hr)
WQ	0.00	5.00	20.03
HMP	0.00	8.00	23.20

Southwest Village
15013C
2/28/2022

BMP Rating and Storage Table

STAGE		STORAGE		DISCHARGE				
h (ft) Above Underdrain	h (ft) Above BB	Incremental storage volume (ft^3)	Cumulative storage volume (ft^3)	Low-flow Orifice (cfs)	Mid-flow Opening 9"W x 15"H (cfs)	High-flow Orifice - 24" W x 12" H (cfs)	Primary Overflow 42" RCP (cfs)	Total Flow (cfs)
0.00	0.00	0	0	0.239	0.000	0.000	0.000	0.478
0.05	0.05	24	24	0.246	0.000	0.000	0.000	0.492
0.10	0.10	71	94	0.253	0.000	0.000	0.000	0.505
0.15	0.15	118	212	0.259	0.000	0.000	0.000	0.518
0.20	0.20	165	376	0.265	0.000	0.000	0.000	0.531
0.25	0.25	212	588	0.271	0.000	0.000	0.000	0.543
0.30	0.30	259	846	0.277	0.000	0.000	0.000	0.555
0.35	0.35	306	1,152	0.283	0.000	0.000	0.000	0.566
0.40	0.40	353	1,504	0.289	0.000	0.000	0.000	0.578
0.45	0.45	400	1,904	0.295	0.000	0.000	0.000	0.589
0.50	0.50	447	2,350	0.300	0.000	0.000	0.000	0.600
0.55	0.55	494	2,844	0.306	0.000	0.000	0.000	0.611
4.50	4.50	705	58,163	0.594	0.000	0.000	0.000	1.189
4.55	4.55	705	58,868	0.597	0.000	0.000	0.000	1.194
4.60	4.60	705	59,573	0.600	0.000	0.000	0.000	1.200
4.65	4.65	705	60,278	0.603	0.000	0.000	0.000	1.205
4.70	4.70	705	60,983	0.605	0.000	0.000	0.000	1.211
4.75	4.75	705	61,688	0.608	0.000	0.000	0.000	1.216
4.80	4.80	705	62,393	0.611	0.000	0.000	0.000	1.221
4.85	4.85	705	63,098	0.613	0.000	0.000	0.000	1.227
4.90	4.90	705	63,803	0.616	0.000	0.000	0.000	1.232
4.95	4.95	705	64,508	0.619	0.000	0.000	0.000	1.237
5.00	5.00	705	65,213	0.621	0.000	0.000	0.000	1.243
5.05	5.05	705	65,918	0.624	0.025	0.000	0.000	1.273
5.10	5.10	705	66,623	0.627	0.071	0.000	0.000	1.324
5.15	5.15	705	67,328	0.629	0.131	0.000	0.000	1.389
5.20	5.20	705	68,033	0.632	0.201	0.000	0.000	1.465
5.25	5.25	705	68,738	0.634	0.281	0.000	0.000	1.550
5.30	5.30	705	69,443	0.637	0.370	0.000	0.000	1.644
5.35	5.35	705	70,148	0.640	0.466	0.000	0.000	1.745
5.40	5.40	705	70,853	0.642	0.569	0.000	0.000	1.854
5.45	5.45	705	71,558	0.645	0.679	0.000	0.000	1.969
5.50	5.50	705	72,263	0.647	0.795	0.000	0.000	2.090
5.55	5.55	705	72,968	0.650	0.918	0.000	0.000	2.217
5.60	5.60	705	73,673	0.652	1.046	0.000	0.000	2.350
5.65	5.65	705	74,378	0.655	1.179	0.000	0.000	2.489
5.70	5.70	705	75,083	0.657	1.318	0.000	0.000	2.632
5.75	5.75	705	75,788	0.660	1.461	0.000	0.000	2.781
5.80	5.80	705	76,493	0.662	1.610	0.000	0.000	2.935
5.85	5.85	705	77,198	0.665	1.763	0.000	0.000	3.093
5.90	5.90	705	77,903	0.667	1.921	0.000	0.000	3.256
5.95	5.95	705	78,608	0.670	2.083	0.000	0.000	3.423
6.00	6.00	705	79,313	0.672	2.250	0.000	0.000	3.594

POLLUTANT CONTROL WORKSHEETS AND ADDITIONAL BACKUP

FOR

BMP 14

Biofiltration Basin

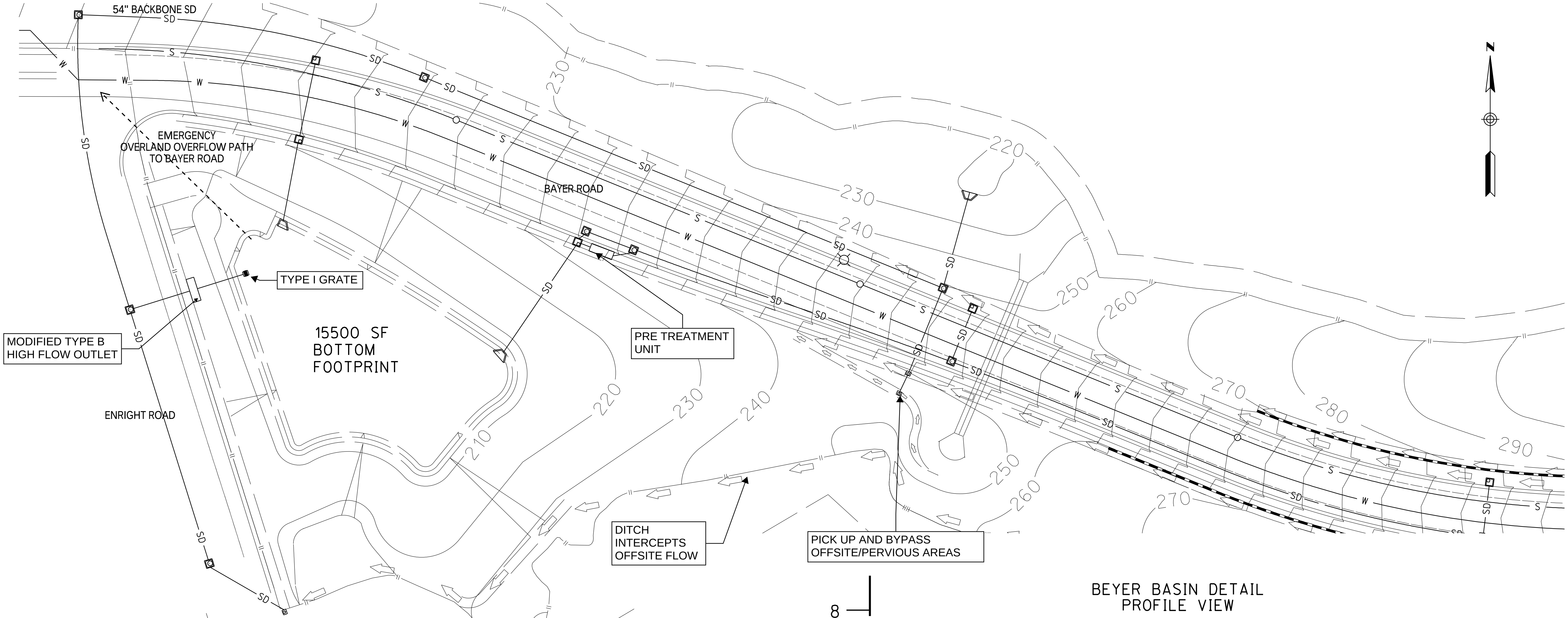

BEYER BASIN DETAIL
PROFILE VIEW

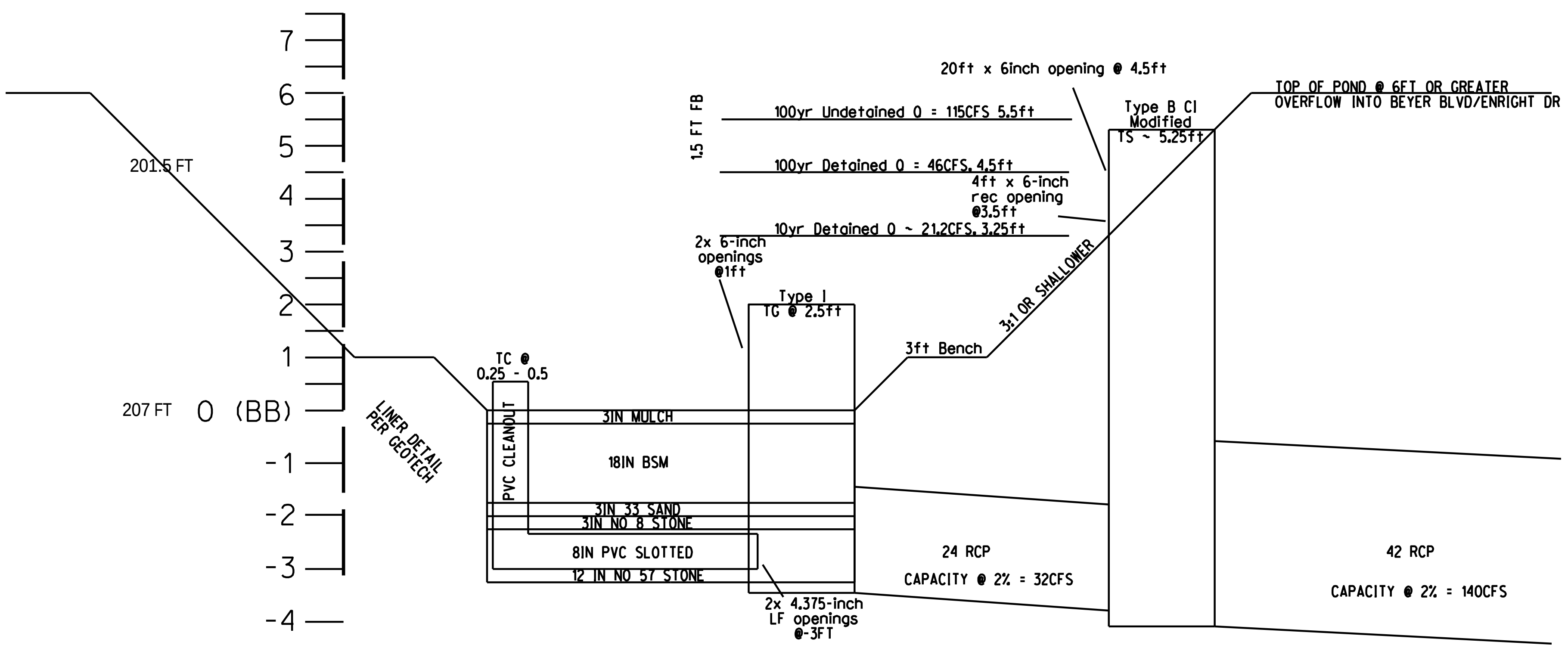

BMP 14 DETAILS

2/28/2022
J-15013C
NOT TO SCALE

The City of SAN DIEGO	Project Name	Southwest Village - VTM	
	BMP ID	BMP 14 - Biofiltration	

Sizing Method for Pollutant Removal Criteria		**Worksheet B.5-1**	
1	Area draining to the BMP	549,604	sq. ft.
2	Adjusted runoff factor for drainage area (Refer to Appendix B.1 and B.2)	0.78	
3	85th percentile 24-hour rainfall depth	0.47	inches
4	Design capture volume [Line 1 x Line 2 x (Line 3/12)]	16790	cu. ft.
BMP Parameters			
5	Surface ponding [6 inch minimum, 12 inch maximum]	12	inches
6	Media thickness [18 inches minimum], also add mulch layer and washed ASTM 33 fine aggregate sand thickness to this line for sizing calculations	24	inches
7	Aggregate storage (also add ASTM No 8 stone) above underdrain invert (12 inches typical) – use 0 inches if the aggregate is not over the entire bottom surface area	12	inches
8	Aggregate storage below underdrain invert (3 inches minimum) – use 0 inches if the aggregate is not over the entire bottom surface area	3	inches
9	Freely drained pore storage of the media	0.2	in/in
10	Porosity of aggregate storage	0.4	in/in
11	Media filtration rate to be used for sizing (maximum filtration rate of 5 in/hr. with no outlet control; if the filtration rate is controlled by the outlet use the outlet controlled rate (includes infiltration into the soil and flow rate through the outlet structure) which will be less than 5 in/hr.)	5	in/hr.
Baseline Calculations			
12	Allowable routing time for sizing	6	hours
13	Depth filtered during storm [Line 11 x Line 12]	30	inches
14	Depth of Detention Storage [Line 5 + (Line 6 x Line 9) + (Line 7 x Line 10) + (Line 8 x Line 10)]	22.8	inches
15	Total Depth Treated [Line 13 + Line 14]	52.8	inches
Option 1 – Biofilter 1.5 times the DCV			
16	Required biofiltered volume [1.5 x Line 4]	25186	cu. ft.
17	Required Footprint [Line 16/ Line 15] x 12	5724	sq. ft.
Option 2 - Store 0.75 of remaining DCV in pores and ponding			
18	Required Storage (surface + pores) Volume [0.75 x Line 4]	12593	cu. ft.
19	Required Footprint [Line 18/ Line 14] x 12	6628	sq. ft.
Footprint of the BMP			
20	BMP Footprint Sizing Factor (Default 0.03 or an alternative minimum footprint sizing factor from Line 11 in Worksheet B.5-4)	0.0214812	
21	Minimum BMP Footprint [Line 1 x Line 2 x Line 20]	9209	sq. ft.
22	Footprint of the BMP = Maximum(Minimum(Line 17, Line 19), Line 21)	9209	sq. ft.
23	Provided BMP Footprint	15500	sq. ft.
24	Is Line 23 ≥ Line 22?	**Yes, Performance Standard is Met**	

The City of SAN DIEGO

Project Name		Southwest Village - VTM	
BMP ID		BMP 14 - Biofiltration	
Sizing Method for Volume Retention Criteria		**Worksheet B.5 2**	
1	Area draining to the BMP	549,604	sq. ft.
2	Adjusted runoff factor for drainage area (Refer to Appendix B.1 and B.2)	0.78	
3	85th percentile 24-hour rainfall depth	0.47	inches
4	Design capture volume [Line 1 x Line 2 x (Line 3/12)]	16790	cu. ft.
Volume Retention Requirement			
5	Measured infiltration rate in the DMA Note: When mapped hydrologic soil groups are used enter 0.10 for NRCS Type D soils and for NRCS Type C soils enter 0.30 When in no infiltration condition and the actual measured infiltration rate is unknown enter 0.0 if there are geotechnical and/or groundwater hazards identified in Appendix C	0	in/hr.
6	Factor of safety	2	
7	Reliable infiltration rate, for biofiltration BMP sizing [Line 5 / Line 6]	0	in/hr.
8	Average annual volume reduction target (Figure B.5-2) When Line 7 > 0.01 in/hr. = Minimum (40, 166.9 x Line 7 +6.62) When Line 7 ≤ 0.01 in/hr. = 3.5%	3.5	%
9	Fraction of DCV to be retained (Figure B.5-3) When Line 8 > 8% = 0.0000013 x Line 8^3 - 0.000057 x Line 8^2 + 0.0086 x Line 8 - 0.014 When Line 8 ≤ 8% = 0.023	0.023	
10	Target volume retention [Line 9 x Line 4]	386	cu. ft.

The City of SAN DIEGO	Project Name	Southwest Village - VTM
	BMP ID	BMP 14 - Biofiltration

Alternative Minimum Footprint Sizing Factor for Non Standard Biofiltration	Worksheet B.5 4

1	Area draining to the BMP	549,604	sq. ft.
2	Adjusted Runoff Factor for drainage area (Refer to Appendix B.1 and B.2)	0.78	
3	Load to Clog (default value when using Appendix E fact sheets is 2.0)	2	lb/sq. ft.
4	Allowable Period to Accumulate Clogging Load (T_L) (default value is 10)	10	years

Volume Weighted EMC Calculation

Land Use	Fraction of Total DCV	TSS EMC (mg/L)	Product
Single Family Residential		123	0
Commercial		128	0
Industrial		125	0
Education (Municipal)		132	0
Transportation	0.9	78	70.2
Multi-family Residential		40	0
Roof Runoff		14	0
Low Traffic Areas		50	0
Open Space	0.1	216	21.6
Other, specify:			0
Other, specify:			0
Other, specify:			0

5	Volume Weighted EMC (sum of all products)	91.8	mg/L

Sizing Factor for Clogging

6	Adjustment for pretreatment measures Where: Line 6 = 0 if no pretreatment; Line 6 = 0.25 when pretreatment is included; Line 6 = 0.5 if the pretreatment has an active Washington State TAPE approval rating for “pre-treatment.”	0.25	
7	Average Annual Precipitation [Provide documentation of the data source in the discussion box; SanGIS has a GIS layer for average annual precipitation]	12	inches
8	Calculate the Average Annual Runoff (Line 7/12) x Line 1 x Line2	428691	cu-ft/yr
9	Calculate the Average Annual TSS Load (Line 8 x 62.4 x Line 5 x (1 – Line 6))/10^6	1842	lb/yr
10	Calculate the BMP Footprint Needed (Line 9 x Line 4)/Line 3	9209	sq. ft.
11	Calculate the Minimum Footprint Sizing Factor for Clogging [Line 10/ (Line 1 x Line 2)]	0.021	

Discussion:

The City of SAN DIEGO

Project Name	Southwest Village - VTM
BMP ID	BMP 14 - Biofiltration

Volume Retention for No Infiltration Condition — Worksheet B.5 6

1	Area draining to the biofiltration BMP	549,604	sq. ft.
2	Adjusted runoff factor for drainage area (Refer to Appendix B.1 and B.2)	0.78	
3	Effective impervious area draining to the BMP [Line 1 x Line 2]	428691	sq. ft.
4	Required area for Evapotranspiration [Line 3 x 0.03]	12861	sq. ft.
5	Biofiltration BMP Footprint	15500	sq. ft.

Landscape Area (must be identified on DS-3247)

	Identification	1	2	3	4	5
6	Landscape area that meet the requirements in SD-B and SD-F Fact Sheet (sq. ft.)	0				
7	Impervious area draining to the landscape area (sq. ft.)	0				
8	Impervious to Pervious Area ratio [Line 7/Line 6]	0.00	0.00	0.00	0.00	0.00
9	Effective Credit Area If (Line 8 >1.5, Line 6, Line 7/1.5]	0	0	0	0	0

10	Sum of Landscape area [sum of Line 9 Id's 1 to 5]	0	sq. ft.
11	Provided footprint for evapotranspiration [Line 5 + Line 10]	15500	sq. ft.

Volume Retention Performance Standard

12	Is Line 11 ≥ Line 4?	Volume Retention Performance Standard is Met	
13	Fraction of the performance standard met through the BMP footprint and/or landscaping [Line 11/Line 4]	1.21	
14	Target Volume Retention [Line 10 from Worksheet B.5.2]	386	cu. ft.
15	Volume retention required from other site design BMPs [(1-Line 13) x Line 14]	-81.09764263	cu. ft.

Site Design BMP

	Identification	Site Design Type	Credit	
16	1			cu. ft.
	2			cu. ft.
	3			cu. ft.
	4			cu. ft.
	5			cu. ft.
	Sum of volume retention benefits from other site design BMPs (e.g. trees; rain barrels etc.). [sum of Line 16 Credits for Id's 1 to 5] Provide documentation of how the site design credit is calculated in the PDP SWQMP.		0	cu. ft.
17	Is Line 16 ≥ Line 15?	Volume Retention Performance Standard is Met		

THIS PAGE INTENTIONALLY LEFT BLANK FOR DOUBLE-SIDED PRINTING

Attachment 2
Backup for PDP Hydromodification Control Measures

This is the cover sheet for Attachment 2.

☐ Mark this box if this attachment is empty because the project is exempt from PDP hydromodification management requirements.

THIS PAGE INTENTIONALLY LEFT BLANK FOR DOUBLE-SIDED PRINTING

Project Name: Southwest Village Vesting Tentative Map (VTM)

Indicate which Items are Included:

Attachment Sequence	Contents	Checklist
Attachment 2a	Hydromodification Management Exhibit (Required)	Included See Hydromodification Management Exhibit Checklist.
Attachment 2b	Management of Critical Coarse Sediment Yield Areas (WMAA Exhibit is required, additional analyses are optional) See Section 6.2 of the BMP Design Manual.	☑ Exhibit showing project drainage boundaries marked on WMAA Critical Coarse Sediment Yield Area Map (Required) Optional analyses for Critical Coarse Sediment Yield Area Determination ☐ 6.2.1 Verification of Geomorphic Landscape Units Onsite ☐ 6.2.2 Downstream Systems Sensitivity to Coarse Sediment ☐ 6.2.3 Optional Additional Analysis of Potential Critical Coarse Sediment Yield Areas Onsite
Attachment 2c	Geomorphic Assessment of Receiving Channels (Optional) See Section 6.3.4 of the BMP Design Manual.	☐ Not Performed ☑ Included ☐ Submitted as separate stand-alone document
Attachment 2d	Flow Control Facility Design and Structural BMP Drawdown Calculations (Required) Overflow Design Summary for each structural BMP See Chapter 6 and Appendix G of the BMP Design Manual	☑ Included ☐ Submitted as separate stand-alone document

Project Name: Southwest Village Vesting Tentative Map (VTM)

Use this checklist to ensure the required information has been included on the Hydromodification Management Exhibit:

The Hydromodification Management Exhibit must identify:

☑ Underlying hydrologic soil group
☑ Approximate depth to groundwater
☑ Existing natural hydrologic features (watercourses, seeps, springs, wetlands)
☑ Critical coarse sediment yield areas to be protected OR provide a separate map showing that the project site is outside of any critical coarse sediment yield areas
☑ Existing topography
☑ Existing and proposed site drainage network and connections to drainage offsite
☑ Proposed grading
☑ Proposed impervious features
☑ Proposed design features and surface treatments used to minimize imperviousness
☑ Point(s) of Compliance (POC) for Hydromodification Management
Existing and proposed drainage boundary and drainage area to each POC (when necessary, create separate exhibits for pre-development and post-project conditions)
☑ Structural BMPs for hydromodification management (identify location, type of BMP, and size/detail).

THIS PAGE INTENTIONALLY LEFT BLANK FOR DOUBLE-SIDED PRINTING

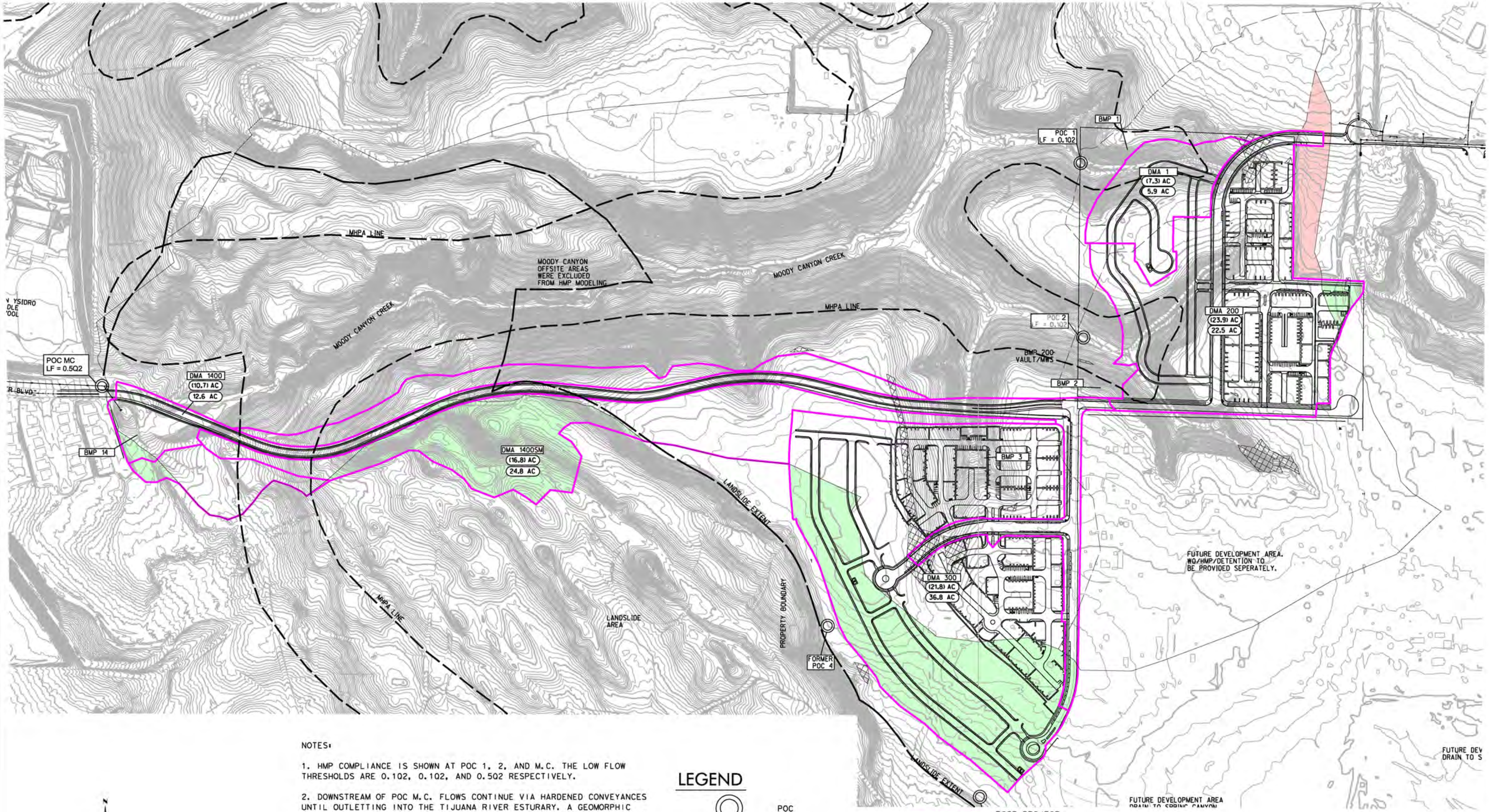

NOTES:

1. HMP COMPLIANCE IS SHOWN AT POC 1, 2, AND M.C. THE LOW FLOW THRESHOLDS ARE 0.1Q2, 0.1Q2, AND 0.5Q2 RESPECTIVELY.

2. DOWNSTREAM OF POC M.C. FLOWS CONTINUE VIA HARDENED CONVEYANCES UNTIL OUTLETTING INTO THE TIJUANA RIVER ESTURARY. A GEOMORPHIC CHANNEL ASSESSMENT WILL BE PERFORMED AS PART OF FINAL ENGINEERING.

3. GEOTECHNICAL ENGINEERS HAVE DEEMED THAT PLACING STORM DRAIN OUTFALLS IN THE LANDSLIDE REGION IS UNFEASIBLE. THEREFORE A SIGNIFICANT DIVERSION WILL BE REQUIRED FOR AREAS THAT ARE SLATED FOR DEVELOPMENT THAT NATURALLY DRAIN INTO THAT AREA. THE FOUR BMPs PROPOSED AS PART OF THE PROJECT WORK TO OFFSET NEGATIVE IMPACTS DUE TO THE DIVERSION.

4. BASED ON THE SAN DIEGO REGIONAL MAPPING DOCUMENT, THERE IS A FEW POTENTIAL CRITICAL COURSE SEDIMENT YIELD AREAS THAT ARE IDENTIFIED WITHIN THE PROJECT AREA. WHERE THE PCCSYA EXISTS, A MORE DETAILED ANALYSIS MAY BE REQUIRED PRIOR TO OR DURING THE FINAL ENGINEERING (CONSTRUCTION DOCUMENT) STAGE TO ADDRESS THE REQUIREMENTS.

LEGEND

◎	POC
DMA 300	DMA ID
(X.X) AC	BASIN AREA PRE PROJECT
X.X AC	BASIN AREA POST PROJECT
—	PRE PROJECT MAJOR BASIN BOUNDARY
– – –	PRE PROJECT MINOR BASIN BOUNDARY
—	POST PROJECT MAJOR BASIN BOUNDARY
—	POST PROJECT MINOR BASIN BOUNDARY
🟩	DIVERSIONS INTO MOODY CANYON
🟥	DIVERSIONS OUT OF MOODY CANYON
▨	PCCSYA

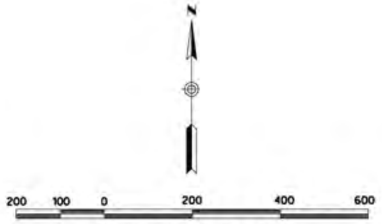

GRAPHIC SCALE 1" = 200'

HYDROMODIFICATION EXHIBIT FOR SOUTHWEST VILLAGE VTM

Sheet 1 of 1

J-15013-C

Date: March, 2022

RICK
ENGINEERING COMPANY
San Diego

5620 FRIARS ROAD
SAN DIEGO, CA 92110
619-291-0707
(FAX) 619-291-4165

J-15013-C

rickengineering.com

Riverside - Orange - Sacramento - San Luis Obispo - Phoenix - Tucson - Denver

NOT FOR CONSTRUCTION - EXHIBIT FOR DRAINAGE STUDY ONLY

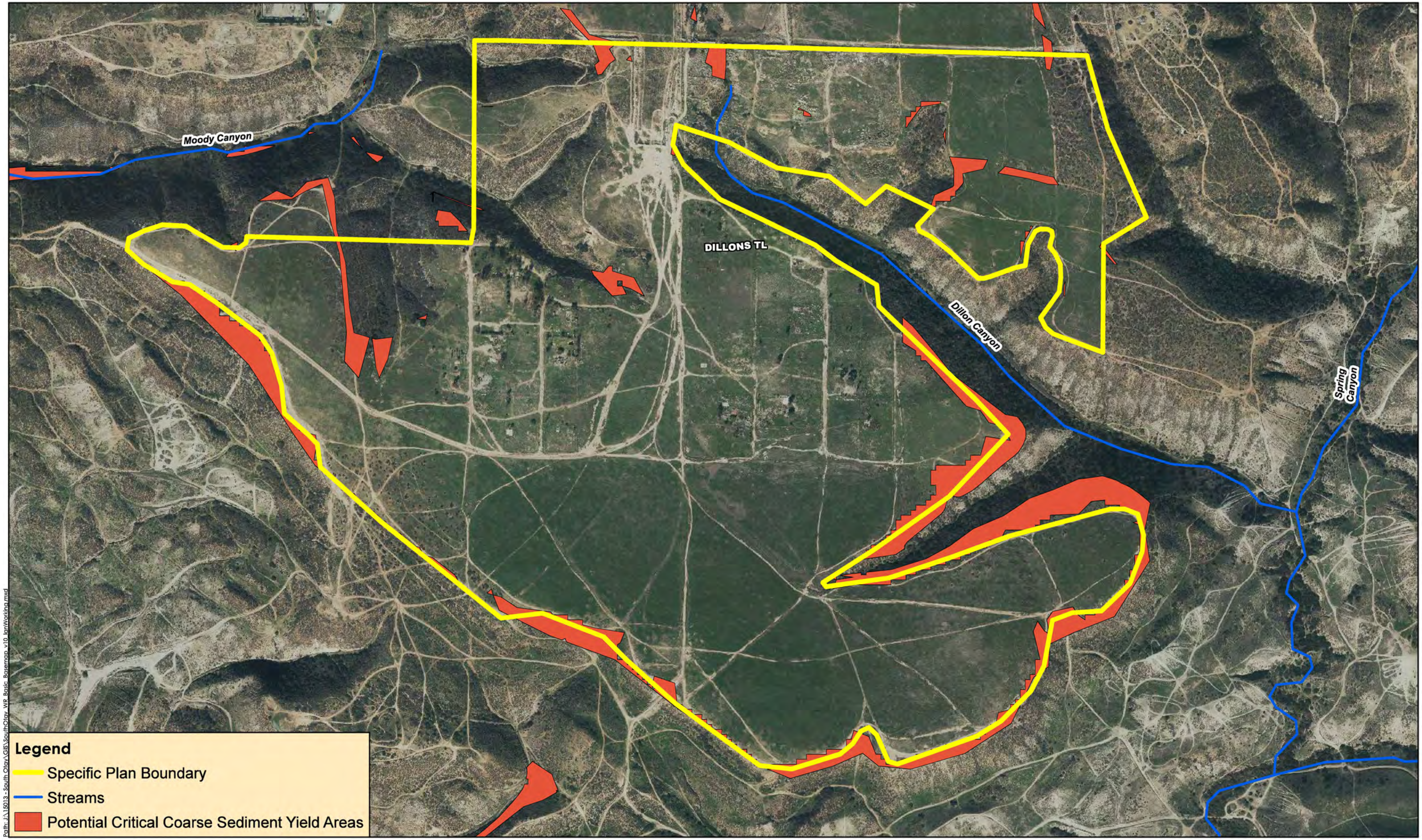

Path: J:\15013 - South Otay\GIS\SouthOtay_WR_Basic_Basemap_v10_IanWorking.mxd

RICK
ENGINEERING COMPANY

Scale in Feet
0 500 1,000

North

Date of Exhibit: 3/6/2018
SanGIS/USGS Aerial Imagery: 11/2014

POTENTIAL CRITICAL COARSE SEDIMENT YIELD AREA EXHIBIT FOR SOUTHWEST VILLAGE SPECIFIC PLAN

J-15013C

Attachment 2C

RICK™
ENGINEERING COMPANY

December 15, 2022

City of San Diego
Development Services
101 Ash Street
San Diego, California 92101

SUBJECT: THRESHOLD CHANNEL ASSESSMENT FOR SOUTHWEST VILLAGE (RICK ENGINEERING COMPANY JOB NUMBER 15013-C)

This letter is being prepared in support of a Threshold Channel Analysis (or Geomorphic Channel Analysis) for the Southwest Village project located in Otay Mesa. One location has been considered for analysis and it has been concluded that using $0.5Q_2$ as the low-flow threshold is acceptable:

1) The outfall into the Tijuana River Estuary from which the project conveys flows via proposed and existing hardened systems (storm drain, culverts and open channels)

Appendix H.7.2 in the City of San Diego Stormwater Standards Manual, dated May 2021, details the requirements for threshold channel analysis and defines a threshold channel as,

> *A stream channel in which channel boundary material has no significant movement during the design flow. If there is no movement of bed load in the stream channel, then it is not anticipated that reductions in sediment supply will be detrimental to stream stability because the channel bed consists of the parent material and not coarse sediment supplied from upstream. In such a situation, changes in sediment supply are not considered a geomorphic condition of concern.*

Furthermore, this section in the appendix continues by defining the domain of analysis (or area of study) that is required to be considered before a new low-flow threshold can be considered for the channel.

- From the point of compliance (POC) proceed downstream until reaching one of the following:
    - At least one reach downstream of the first grade-control point (preferably second downstream grade control location);
    - Tidal backwater/lentic (still water) waterbody;
    - Equal order tributary (Strahler 1952);
    - A 2-fold increase in drainage area.

  OR demonstrate sufficient flow attenuation through existing hydrologic modeling.

- From the point of compliance proceed upstream for 20 channel top widths OR to the first grade control in good condition, whichever comes first.

Worksheet H.7-1 has been provided here for both outfall locations as a means to document the selection of the domain of analysis, as well as an exhibit of the flow path from the project site to the downstream system where one of the threshold criteria is met.

Please feel free to contact Eric Hengesbaugh or myself if you have any questions and/or concerns at (619) 291-0707.

Sincerely,

RICK ENGINEERING COMPANY

Brendan Hastie, P.E.
R.C.E. #65809, Exp. 9/21
Principal

Attachments

1. Worksheet H.7-1 Beyer BMP
2. Exhibit Beyer BMP
3. As-Builts
4. Site Visit Photos

Worksheet H.7-1: Domain of Analysis

Domain of Analysis		Worksheet H.7-1
Use this form to document the domain of analysis		
Project Name: Southwest Village Vesting Tentative Map		
Project Tracking Number / Permit Application Number: 614791		
Part 1: Identify Domain of Analysis		
Project Location (at proposed stormwater discharge point)		
1	Address:	
2	Latitude (decimal degrees):	32°33'20.38"N
3	Longitude (decimal degrees):	117° 3'22.57"W
4	Watershed:	Tijuana River
Basis for determining downstream limit: The Tijuana River Estuary is know primarily for sedimentation rather than erosion.		
Channel length from discharge point to downstream limit:		1,500-ft
Basis for determining upstream limit: The Tijuana River Estuary is know primarily for sedimentation rather than erosion.		
Channel length from discharge point to upstream limit:		0-ft

Worksheet H.7-1; Page 2 of 2

Photo(s)

Map or aerial photo of site. Include channel alignment and tributaries, project discharge point, upstream and downstream limits of analysis, ID number and boundaries of geomorphic channel units, and any other features used to determine limits (e.g. exempt water body, grade control).

See the exhibit attached on the following page that defines the flow path from the project site through hardened channel and ultimately a discharge point into the Tijuana River Estuary. The Tijuana River Estuary is know primarily for sedimentation rather than erosion.

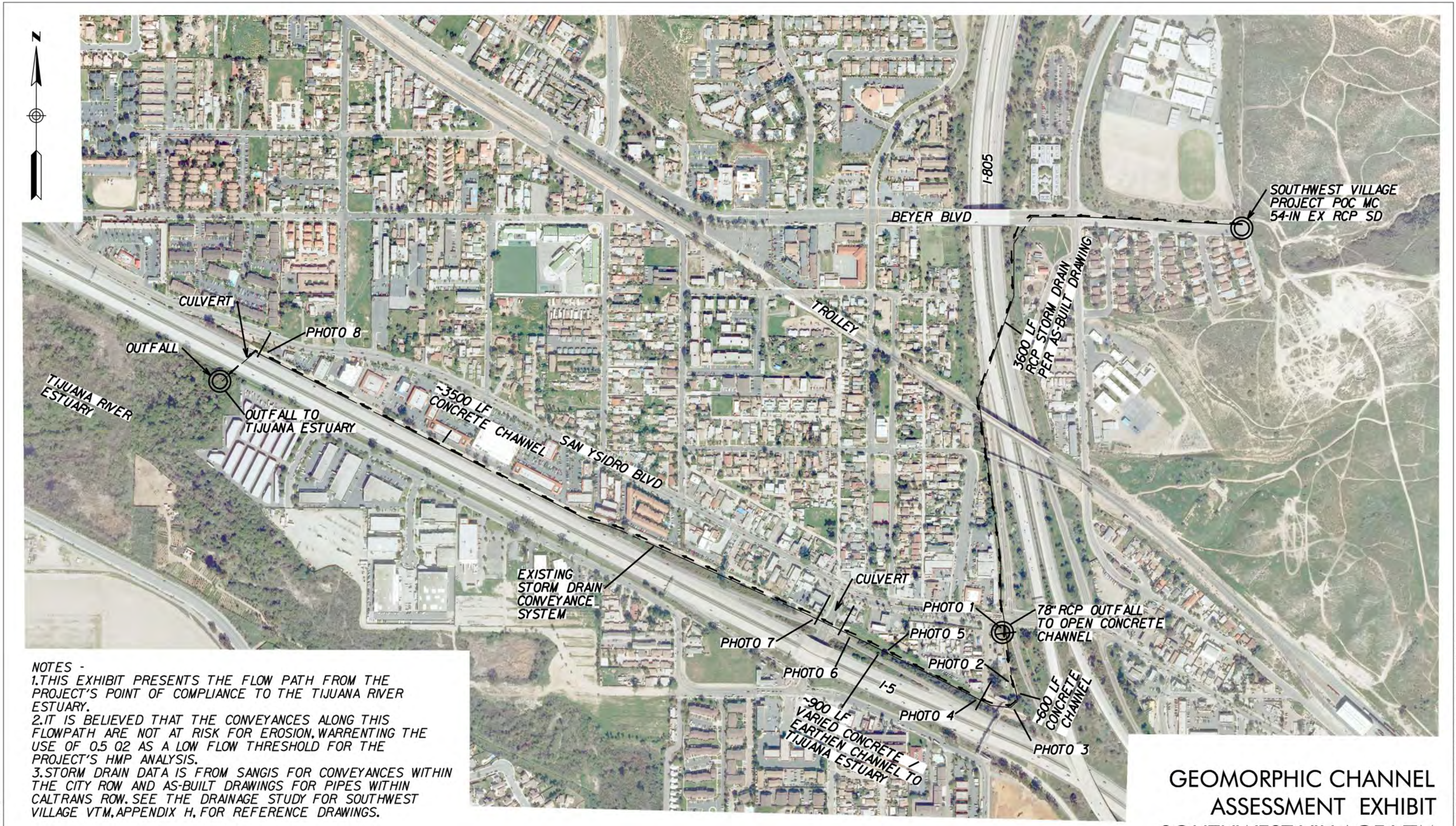

NOTES -

1. THIS EXHIBIT PRESENTS THE FLOW PATH FROM THE PROJECT'S POINT OF COMPLIANCE TO THE TIJUANA RIVER ESTUARY.
2. IT IS BELIEVED THAT THE CONVEYANCES ALONG THIS FLOWPATH ARE NOT AT RISK FOR EROSION, WARRENTING THE USE OF 0.5 Q2 AS A LOW FLOW THRESHOLD FOR THE PROJECT'S HMP ANALYSIS.
3. STORM DRAIN DATA IS FROM SANGIS FOR CONVEYANCES WITHIN THE CITY ROW AND AS-BUILT DRAWINGS FOR PIPES WITHIN CALTRANS ROW. SEE THE DRAINAGE STUDY FOR SOUTHWEST VILLAGE VTM, APPENDIX H, FOR REFERENCE DRAWINGS.

GEOMORPHIC CHANNEL ASSESSMENT EXHIBIT SOUTHWEST VILLAGE VTM

December 16, 2022

J-15013-C

GRAPHIC SCALE 1" = 500'

500 250 0 500 1000 1500

RICK™
ENGINEERING COMPANY
San Diego

5620 FRIARS ROAD
SAN DIEGO, CA 92110
619-291-0707
(FAX) 619-291-4165

J-15013-C

rickengineering.com
Riverside - Orange - Sacramento - San Luis Obispo - Phoenix - Tucson - Denver

DIST	COUNTY	ROUTE	POST MILE TOTAL PROJECT	[illegible]	[illegible]
11	SD	805	0.5-3.7	1	385
	SD	75	4.6-5.4		

I-805-1(82)1

STATE OF CALIFORNIA
BUSINESS AND TRANSPORTATION AGENCY
DEPARTMENT OF PUBLIC WORKS
DIVISION OF HIGHWAYS

PROJECT PLANS FOR CONSTRUCTION ON
STATE HIGHWAY
IN SAN DIEGO COUNTY IN AND NEAR SAN DIEGO AND CHULA VISTA ON ROUTE 805 FROM ROUTE 5 TO 3.2 MILES NORTH OF ROUTE 5 AND ON ROUTE 75 FROM 0.5 MILE EAST TO 0.3 MILE WEST OF ROUTE 805

To be supplemented by Standard Plans dated January 1971

INDEX OF SHEETS

Sheet No.	1	Title Sheet
" "	2-3	Typical Cross Sections
" "	4	Standard Plans List
" "	5-21	Layout Plans
" "	22-45	Profiles and Superelevation Diagrams
" "	46-63	Grading and Drainage Plans
" "	64-96	Drainage Profiles
" "	97-105	Drainage and Channel Details (Note: NO SHEET 103)
" "	106-114	Drainage List
" "	115-118	Miscelloneous Construction Details
" "	119-120	Construction Notes
" "	121-134	Special Details
" "	135-152	Utility Plans
" "	153-172	Water and Sewer Relocations
" "	173-226	Lighting, Signal and Sign Plans
" "	227-249	Traffic Plans (Signs, Delineation, Markers)

BRIDGE PLANS

" "	250	Route 805/5 Separation (Existing) Br. No. 57-839L
" "	251-264	San Ysidro Blvd. U.C. Br. No. 57-776 R/L
" "	265-275	Hall Ave. Pedestrian O.C. Br. No. 57-864
" "	276-288	San Ysidro U.P. Br. No. 57-770
" "	289-304	North Vista Ave. O.C. Br. No. 57-773
" "	305-315	Route 75/805 Separation Br. No 57-777 R/L, QR
" "	316-324	Route 75/805 Separation Br. No. 57-777 QL
" "	325-344	Northeast Connector O.C. Br. No. 57-778
" "	345-354	Del Sol Blvd. U.C. Br. No. 57-854 R/L
" "	355-370	Palm Ave. O.C. Br. No. 57-775
" "	371-384	Otay River Bridge Br. No. 57-631 R/L
" "	385	Otay Valley Road U.C. (Existing) Br. No. 57-632 R/L
" "	1-171	Cross Sections

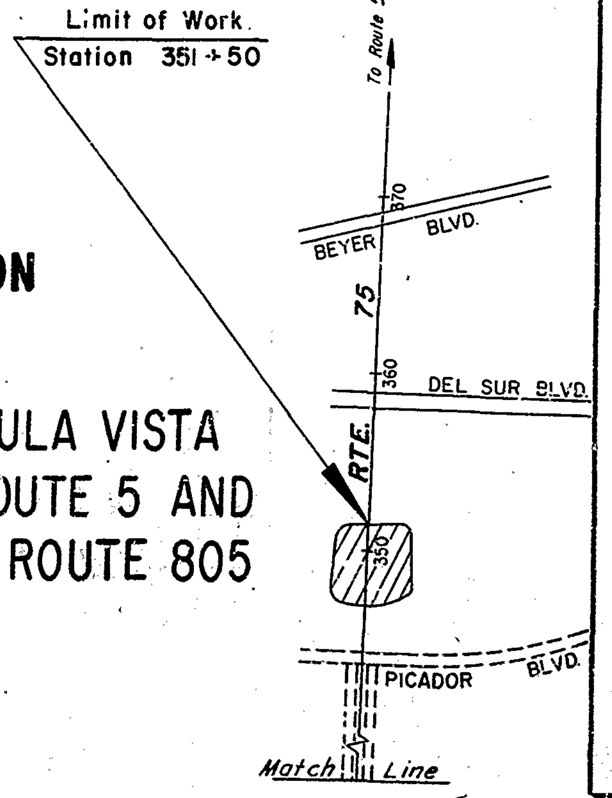

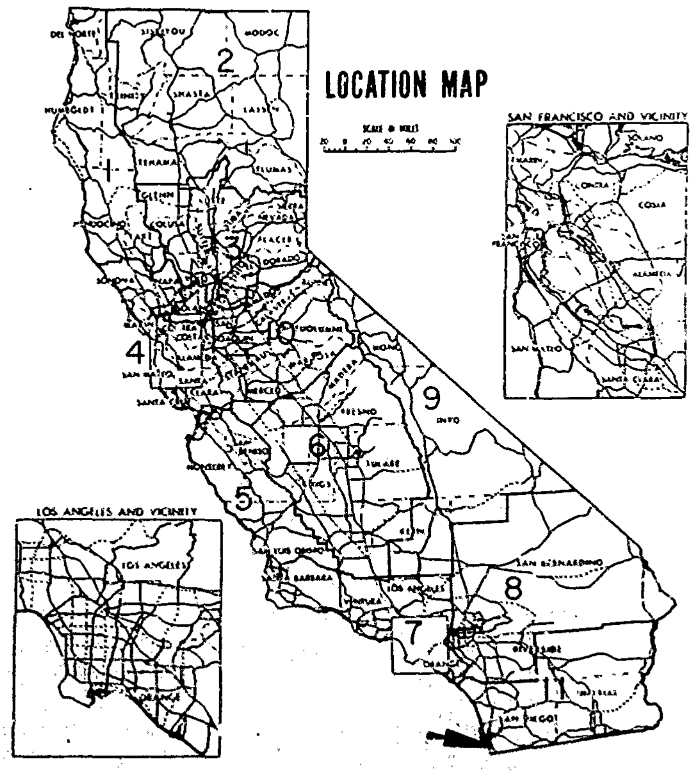

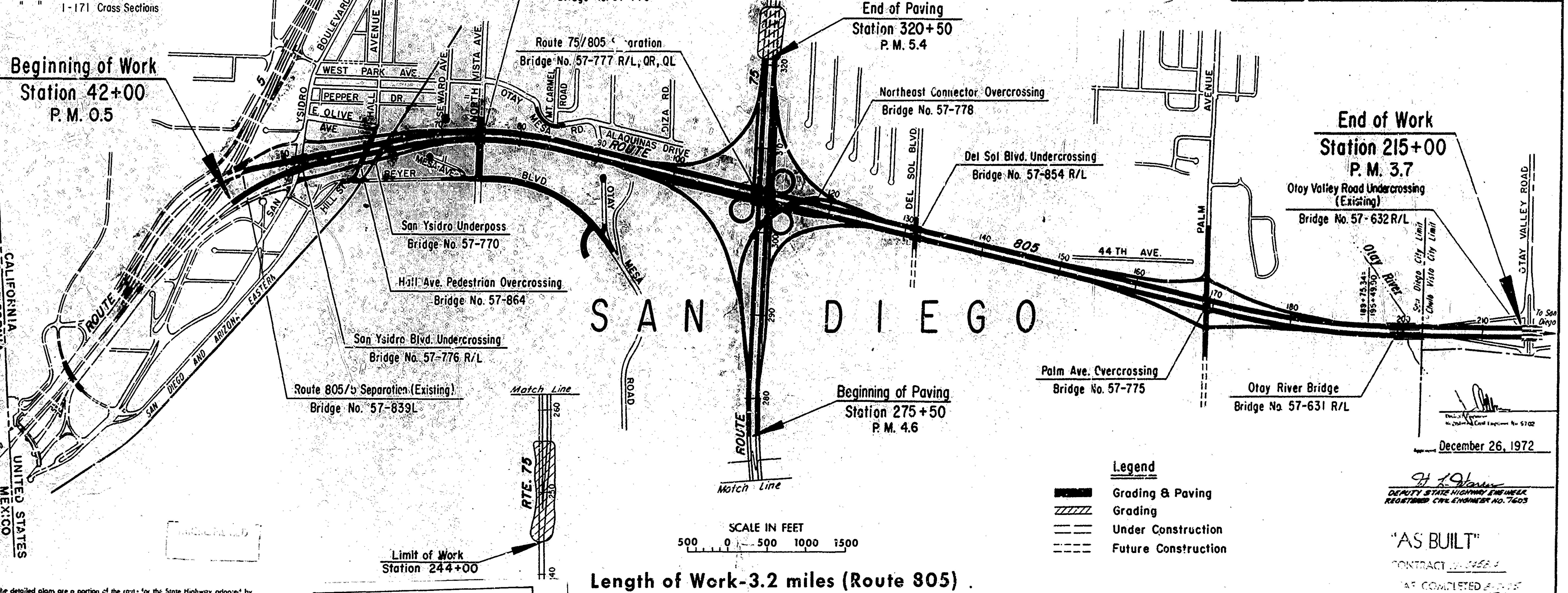

Legend

▬	Grading & Paving
▨	Grading
══	Under Construction
----	Future Construction

Length of Work-3.2 miles (Route 805)

Length of Work-0.8 miles (Route 75)

Project Engineer	Date	Design Engineer	Date	Approval Recommended By	Date
T.R. VASQUEZ	3/72	R.N. CLARK	3/72	J.O. GRASBERGER	3/72

Drawn by	Date
Checked by	Date

The detailed plans are a portion of the route for the State Highway adopted by the California Highway Commission on September 27, 1960 and June 29, 1965 and declared a FREEWAY by resolution of the California Highway Commission on September 27, 1960 and June 29, 1965.

AS BUILT PLANS
Contract No. 11-045814
Date Completed
Document No.

District Engineer
Registered Civil Engineer No. 5702

Approved December 26, 1972

H. L. Warren
DEPUTY STATE HIGHWAY ENGINEER
REGISTERED CIVIL ENGINEER NO. 7603

"AS BUILT"
CONTRACT 11-045814
DATE COMPLETED

Contract No. 11-045814

DIST.	COUNTY	ROUTE	POST MILES—TOTAL PROJECT	SHEET No.	TOTAL SHEETS
11	SD	805-75	0.5/3.7-4.6/5.4	46	385

R.D. Clark
DISTRICT DESIGN ENGINEER
REGISTERED CIVIL ENGINEER NO. 12120
DATE APPROVED December 26, 1972

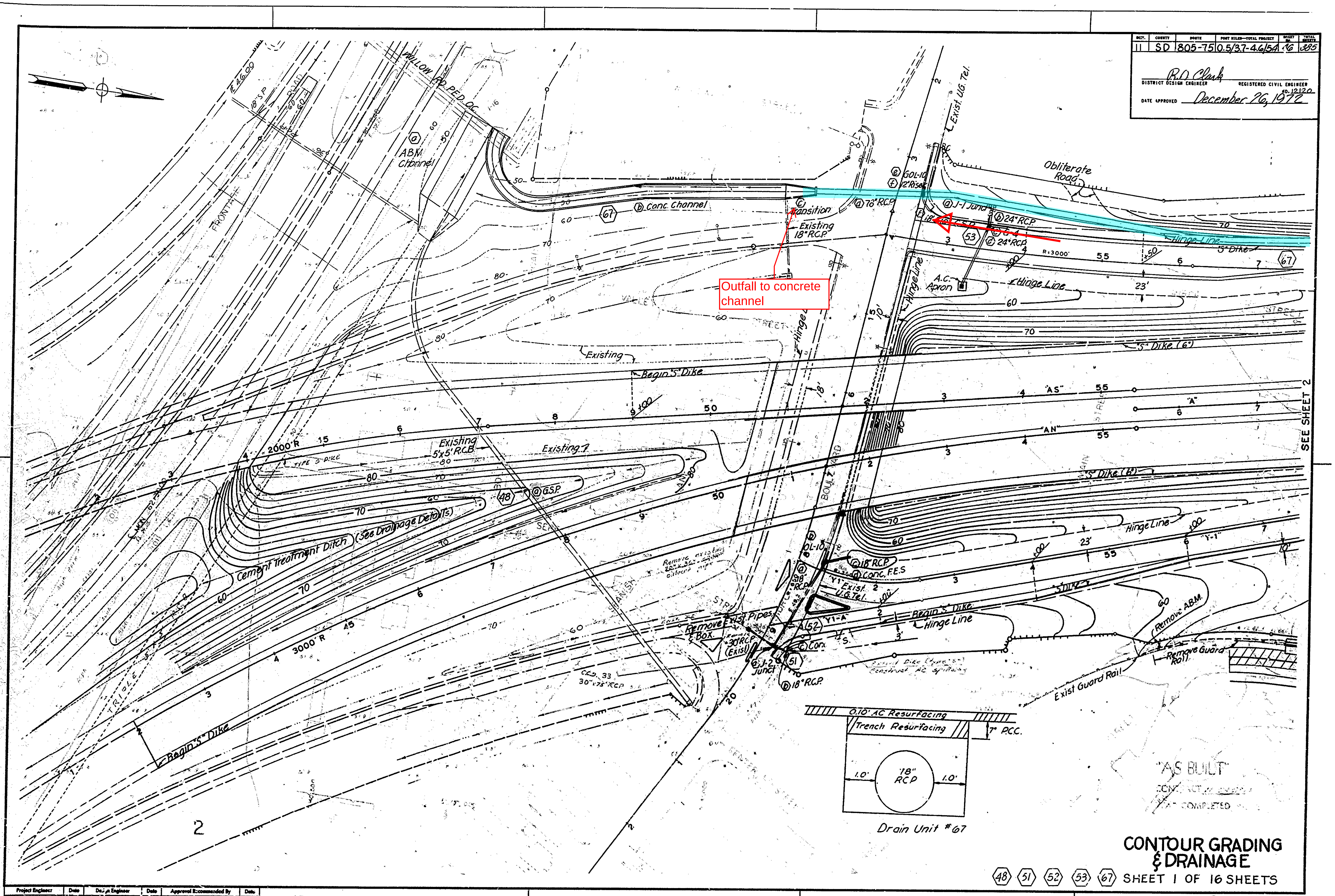

CONTOUR GRADING & DRAINAGE

(48) (51) (52) (53) (67) SHEET 1 OF 16 SHEETS

Project Engineer	Date	Design Engineer	Date	Approval Recommended By	Date

46

45

REV. LT.2 6/19/72

FORM WH23A-PF

AS BUILT PLANS
Contract No. 11-045914
Date Completed 7-9-75
Document No. 4000 6281

I HEREBY CERTIFY THAT THIS IS A TRUE AND ACCURATE COPY OF THE ABOVE DOCUMENT TAKEN UNDER MY DIRECTION AND CONTROL ON THIS DATE IN SACRAMENTO, CALIFORNIA PURSUANT TO AUTHORIZATION BY THE DIRECTOR OF TRANSPORTATION.

DATE 7/26/78 SIGNATURE TITLE

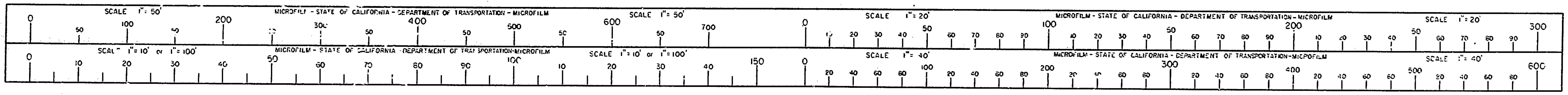

DIST	COUNTY	ROUTE	POST MILES—TOTAL PROJECT	SHEET NO.	TOTAL SHEETS
11	SD	805-75	0.5/3.7-4.6/5.4	47	385

R.D. Clark
DISTRICT DESIGN ENGINEER
REGISTERED CIVIL ENGINEER
No. 12120
DATE APPROVED December 26, 1972

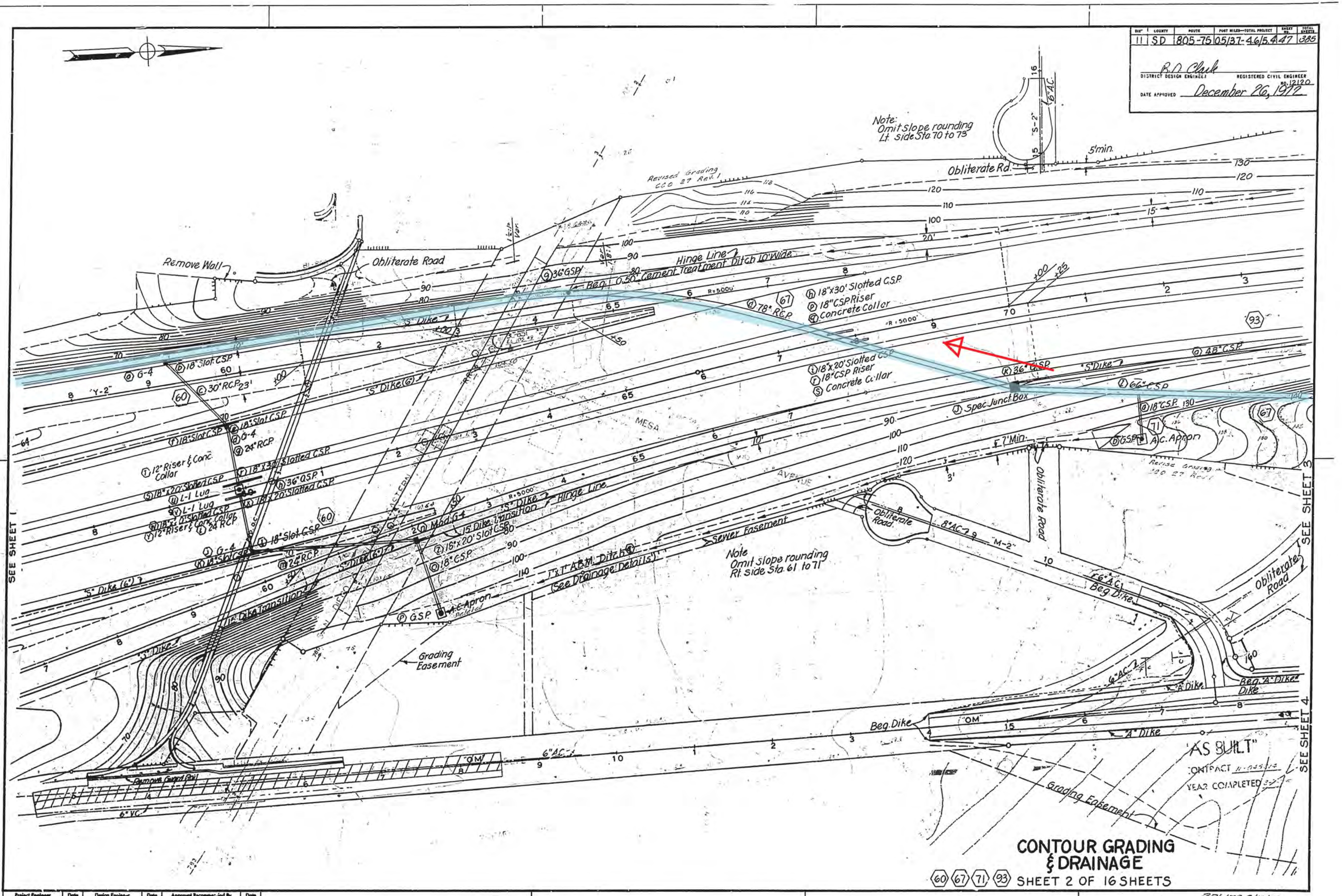

"AS BUILT"
CONTRACT 11-045914
YEAR COMPLETED 1975

CONTOUR GRADING & DRAINAGE

(60) (67) (71) (93) SHEET 2 OF 16 SHEETS

REV. LTR. 6/19/72

Project Engineer	Date	Design Engineer	Date	Approval Recommended By	Date

47

46

FORM WH23A-PF

MICROFILMED
JUL 26 1976

AS BUILT PLANS
Contract No. 11-045914
Date Completed 7-9-75
Document No. 11000628

I HEREBY CERTIFY THAT THIS IS A TRUE AND ACCURATE COPY OF THE ABOVE DOCUMENT TAKEN UNDER MY DIRECTION AND CONTROL ON THIS DATE IN SACRAMENTO, CALIFORNIA PURSUANT TO AUTHORIZATION BY THE DIRECTOR OF TRANSPORTATION.

DATE 7/26/76 SIGNATURE TITLE

DAS-53-76

DIST.	COUNTY	ROUTE	POST MILES—TOTAL PROJECT	SHEET No.	TOTAL SHEETS
11	SD	805-75	0.5/3.7-4.6/5.4	48	385

B.D. Clark
DISTRICT DESIGN ENGINEER
REGISTERED CIVIL ENGINEER No. 12120
DATE APPROVED December 26, 1972

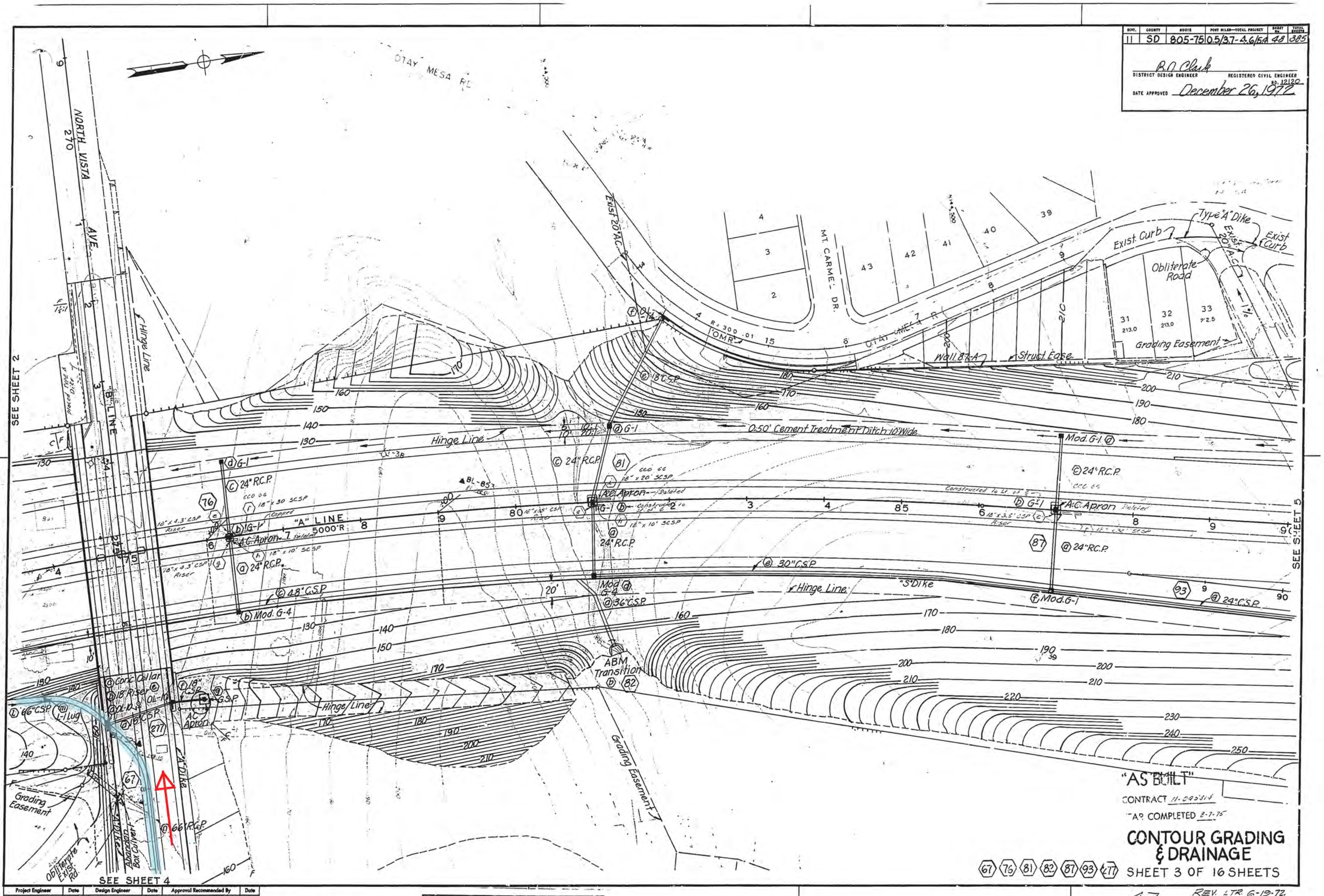

"AS BUILT"
CONTRACT 11-095314
EAR COMPLETED 8-7-75

CONTOUR GRADING & DRAINAGE

67 76 81 82 87 93 277 SHEET 3 OF 16 SHEETS

Project Engineer	Date	Design Engineer	Date	Approval Recommended By	Date

48

47

REV. LTR. 6-19-72.

FORM WH23A-FF

MICROFILM
JUL 26 '85

AS BUILT PLANS
Contract No. 11-045814
Date Completed 7-9-75
Document No. A0006281

I HEREBY CERTIFY THAT THIS IS A TRUE AND ACCURATE COPY OF THE ABOVE DOCUMENT TAKEN UNDER MY DIRECTION AND CONTROL ON THIS DATE IN SACRAMENTO, CALIFORNIA PURSUANT TO AUTHORIZATION BY THE DIRECTOR OF TRANSPORTATION.

DATE 7/26/86 SIGNATURE TITLE

DAS-55-70

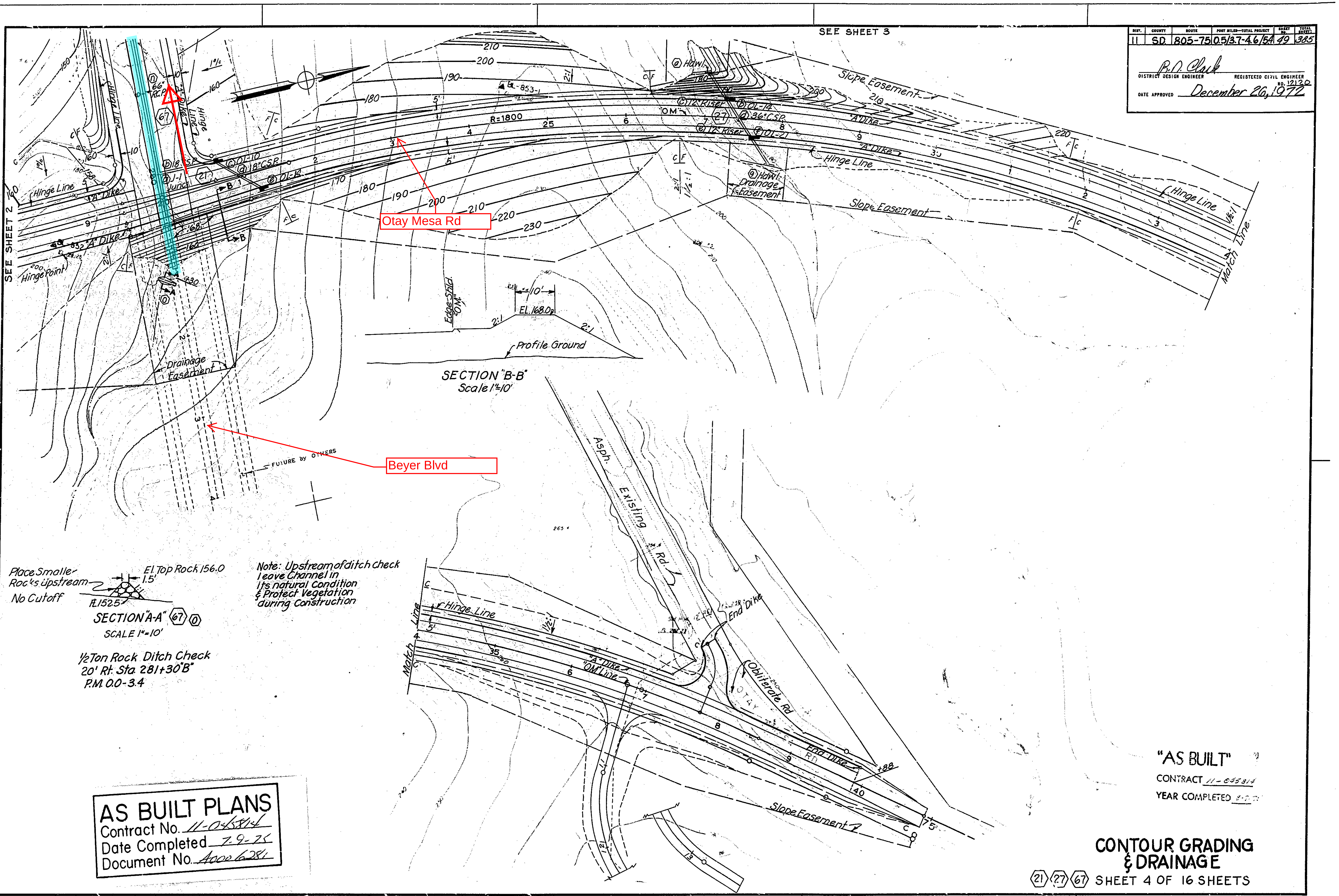

SECTION "B-B"
Scale 1"=10'

SECTION "A-A" (67) ⓪
SCALE 1"=10'

1/2 Ton Rock Ditch Check
20' Rt. Sta. 281+30 "B"
P.M. 0.0-3.4

Note: Upstream of ditch check leave channel in its natural condition & protect vegetation during construction.

DIST.	COUNTY	ROUTE	POST MILES—TOTAL PROJECT	SHEET No.	TOTAL SHEETS
11	SD.	805-75	0.5/3.7-4.6/5.4	49	385

B.D. Clark
DISTRICT DESIGN ENGINEER
REGISTERED CIVIL ENGINEER No. 12120
DATE APPROVED December 26, 1972

"AS BUILT"
CONTRACT 11-045814
YEAR COMPLETED

AS BUILT PLANS
Contract No. 11-045814
Date Completed 7-9-75
Document No. 4000628

CONTOUR GRADING & DRAINAGE

(21) (27) (67) SHEET 4 OF 16 SHEETS

Project Engineer	Date	Design Engineer	Date	Approval Recommended By	Date

49

48

FORM WH23A-PF

I HEREBY CERTIFY THAT THIS IS A TRUE AND ACCURATE COPY OF THE ABOVE DOCUMENT TAKEN UNDER MY DIRECTION AND CONTROL ON THIS DATE IN SACRAMENTO, CALIFORNIA PURSUANT TO AUTHORIZATION BY THE DIRECTOR OF TRANSPORTATION.

DATE 7/26/76 SIGNATURE TITLE

DAS-55-78

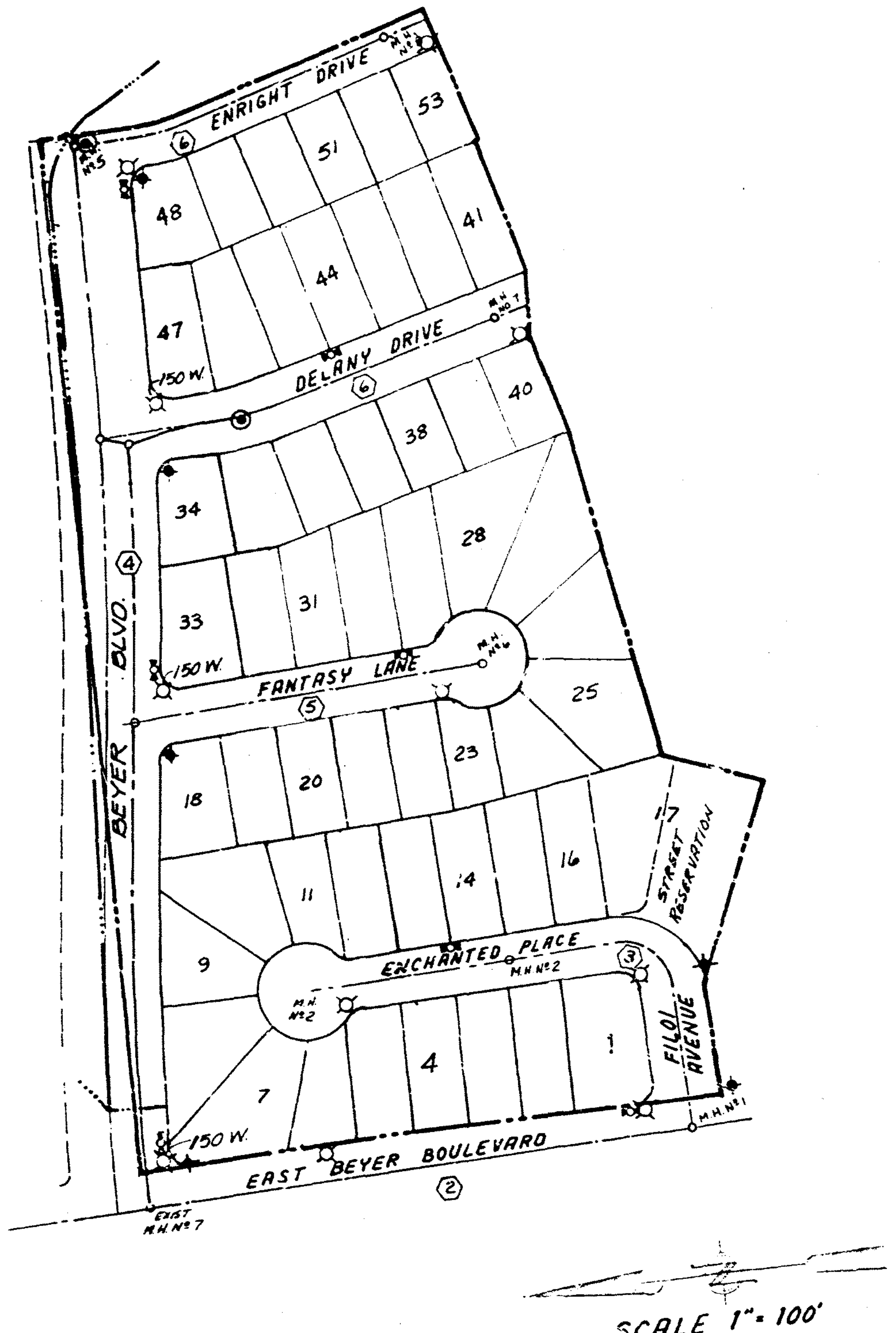

GENERAL NOTES

1. WHERE NEW UNDERGROUND CONNECTS TO EXISTING WORK IT SHALL BE THE RESPONSIBILITY OF THE CONTRACTOR TO DETERMINE THE LOCATIONS AND ELEVATION OF EXISTING WORK PRIOR TO EXCAVATION FOR NEW WORK AND TO CONNECT THE NEW WORK THERETO.
2. PRIOR TO MIXING WITH CEMENT AND WATER, ALL MINERAL AGGREGATE USED FOR THE PRODUCTION OF CEMENT TREATED BASE SHALL HAVE A SAND EQUIVALENT OF NOT LESS THAN 30, WHEN TESTED BY CALIFORNIA DIVISION OF HIGHWAYS TEST METHOD NUMBER CALIFORNIA 217.
3. CONTRACTORS MAKING ANY TYPE OF EXCAVATION ON THIS PROJECT AFTER ROUGH GRADE AND PRIOR TO FINISH GRADE SHALL REMOVE FROM THE SITE OR TO AREA DESIGNATED BY ENGINEER OF WORK, ALL EXCAVATION MATERIAL EXCEPT THAT USED AS COMPACTED BACKFILL IN SUCH EXCAVATION.
4. THE CONTRACTOR SHALL VERIFY THE LOCATION OF AND PROTECT ALL EXISTING IMPROVEMENTS BEFORE AND DURING CONSTRUCTION.
5. TOP OF STORM DRAIN BOXES SHALL BE CONSTRUCTED CONCURRENT WITH ADJOINING CURBS AND GUTTERS.
6. ALL STRUCTURES IN STREET RIGHT OF WAY SHALL BE KEPT AT LEAST 12" BELOW FINISH GRADE UNTIL CURBS, SIDEWALK AND PAVEMENT ARE INSTALLED AND SHALL THEN BE ADJUSTED TO FINISH GRADE.
7. PROVIDE ADEQUATE PROTECTION - CRASH POST, TYPE "G" CURB - PEDESTAL, FOR FIRE HYDRANTS IN ROLLED CURB AREAS - SEE DETAIL. FLANGE SHALL BE ABOVE PEDESTAL.
8. ENGINEER'S GRADE STAKES SHALL BE PROVIDED ON PARTIAL WIDTH STREETS BEFORE PAVING BEGINS.
9. ELECTRICAL & TELEPHONE SERVICE FACILITIES SHALL BE INSTALLED UNDERGROUND IN ACCORDANCE WITH SECTION 102.0404 OF THE MUNICIPAL CODE AND SUBDIVISION BOARD RESOLUTION NO. 264. THERE ARE EXISTING 12 KVA OVERHEAD LINES ALONG WESTERN EDGE THIS SUBDIVISION TO BE UNDERGROUNDED.
10. ALL UNDERGROUND UTILITIES & LATERALS TO BE INSTALLED BEFORE CONSTRUCTION OF CURBS OR CONCRETE
11. CROSS-GUTTERS OR SURFACING OF STREETS.
CONTRACTOR SHALL VERIFY LOCATIONS OF DRIVEWAYS AND SHALL CONSTRUCT DRIVEWAY DEPRESSION CONCURRENT WITH CURB CONSTRUCTION FOR EACH LOT. STANDARD DRAWING NUMBERS G-14, G-16, G-15

WATER AND SEWER NOTES

1. THE WATER AND SEWER FACILITIES SHOWN ON THESE PLANS SHALL BE CONSTRUCTED IN ACCORDANCE WITH THE REQUIREMENTS OF THE WATER UTILITIES DIRECTOR.
2. EACH BUILDING SHALL RECEIVE A 1-INCH WATER SERVICE AND 4-INCH SEWER HOUSE CONNECTION. LOCATION TO BE DETERMINED IN THE FIELD BY THE ENGINEER OF WORK. THE "AS BUILT" LOCATIONS SHALL BE SHOWN ON THESE PLANS AND THE SEWER LATERAL TABLE COMPLETED PRIOR TO ACCEPTANCE OF THE WATER AND SEWER FACILITIES.
3. WATER SERVICES, SEWER LATERALS AND FIRE HYDRANT SERVICES ARE TO BE INSTALLED IN ACCORDANCE WITH THE STANDARD DRAWINGS. THE LOCATION OF WATER AND SEWER FACILITIES SHOWN ON THESE PLANS SHALL TAKE PRECEDENCE IN CASE OF CONFLICTS WITH OTHER UTILITIES NOT SHOWN HEREON.
4. SUBSTITUTION OF MATERIALS FOR CONSTRUCTION OF WATER AND SEWER FACILITIES WILL NOT BE ALLOWED UNLESS APPROVED BY THE WATER UTILITIES DIRECTOR.
5. LOCATE WATER SERVICES AND SEWER HOUSE CONNECTIONS OUT OF DRIVEWAYS. THE SEWER HOUSE CONNECTION SHALL BE A MINIMUM 5' DISTANCE DOWNSTREAM FROM THE WATER SERVICE.
6. WHERE SEWER LATERALS CROSS THE CURB LINE, A LETTER "S" SHALL BE STAMPED OR CHISELED IN THE CURB FACE (1-1/2-INCHES HIGH AND 3/16-INCHES DEEP).
7. COVER OVER WATER MAIN IS TO BE 3' UNLESS OTHER IS CALLED OUT. IF OVER 5' OF COVER AND LESS THAN 2.5', A.C. MAIN IS NOT ACCEPTABLE.
8. SEWER LATERALS ARE TO BE SPACED SO THERE IS ONLY ONE CONNECTION IN ANY ONE PIPE LENGTH. DOUBLE WYES ARE NOT TO BE USED.
9. OPEN ENDS OF ALL SEWER MAINS AND SEWER LATERALS SHALL BE PLUGGED WITH PVC. PLUGS.
10. ALL LATERALS WITH LESS THAN 4-FOOT COVER TO INVERT BE CONCRETE ENCASED.
11. ALL SEWER MAINS AND LATERALS SHALL BE CONSTRUCTED IN ACCORDANCE WITH THE CURRENT SEWER AGENCY AND STREET AGENCY STANDARDS FOR SEWER CONSTRUCTION AND SAID STANDARDS WILL GOVERN ALL SEWER TRENCH BACKFILL.
12. SUBSTITUTION OF MATERIALS FOR CONSTRUCTION OF WATER AND SEWER FACILITIES SHALL NOT BE ALLOWED UNLESS APPROVED BY THE WATER UTILITIES DIRECTOR.
13. ALL WATER MAINS SHALL BE CLASS 150 UNLESS OTHERWISE NOTED.
14. ALL MANHOLE COVERS, GATE VALVE COVERS AND STREET MONUMENTS SHALL BE ADJUSTED TO FINISH GRADE. (NEW OR EXISTING).
15. PRESSURE REGULATORS REQUIRED ON WATER SERVICES.
16. BYPASS REQUIRED ON 12" AND 16" GATE VALVES.

SOILS REPORT

WILLIAM S. KROOSKOS & ASSOCIATES
REPORT DATED JULY 21, 1977
PROJECT NO. 77-5343

STORM DRAIN ALTERNATES

ALTERNATE NO. 1: ASBESTOS CEMENT DRAIN PIPE, SPECIAL PROVISION P-21 SHALL GOVERN. (A.C.P. SHALL BE 2000-D)

ALTERNATE NO. 2 CAST IN PLACE CONCRETE PIPE, SPECIAL PROVISION P-16 SHALL GOVERN.

REFERENCE DRAWINGS

OTAY MESA SEWER AND SAN YSIDRO SCHOOL DISTRICT WATER MAIN DWGS.: 16864-1-D, 16864-2-D, AND 16864-3-D.

WATER CONNECTIONS

CONNECTION NO. 1 - $2000.00

SITE DEVELOPMENT

GRADING - SHEETS 9 & 10
LANDSCAPING - SHEETS 9 & 11
IRRIGATION - SHEETS 9 & 11
EXCAVATION = 24,500 C.Y.
EMBANKMENT = 150,000 C.Y.
(IMPORT) = 125,500 C.Y.

WORK TO BE DONE

The Improvements consist of the following work to be done according to these plans and the Specifications and Standard Drawings of the City of San Diego.

SPECIFICATIONS

(1) Green Book Standard Specifications (1976 Ed.) Document No. 755163 filed May 10, 1976, and
(2) City of San Diego Standard Special Provisions, Document No. 758403, filed February 25, 1977.

STANDARD DRAWINGS

(1) City of San Diego Standard Drawings (1977 Ed.) Document No. 758672 filed March 21, 1977, and
(2) ( )* Denotes City of San Diego Standard Drawing per Document No. 735691, filed April 26, 1971.

IMPROVEMENTS	STD. DWG. NO.	SYMBOL
A.C. PAVEMENT	(G-58)*(G-59-T)*	
TYPE "G" CURB	G-2	
PAVEMENT CUTOFF WALL	G-22	
CROSS GUTTER	G-12	
SIDEWALK	G 7	
PEDESTRIAN RAMP	SD G-101	
A.C. BERM	G-5	6" B-1
CONTROL MONUMENT (3)	(M-21-T)*	◉
DRIVEWAY	G-14	
2" A.C.		☒
SEWER MAIN	S-4, S-5	8" P.V.C.
SEWER CONCRETE MANHOLE (JOHNS-MANVILLE)	S-1, M-3 (SEE DETAIL SHT.)	M.H.
4" P.V.C. SEWER HOUSE CONNECTION	S-13	Ⓢ
CONCRETE CRADLE FOR SEWERS	S-6	
CUT OFF WALL	S-10	
WATER MAIN (TYLER FITTINGS JOHNS-MANVILLE)	W 21, W-17, W-18, W-20	8" A.C.
1" COPPER WATER SERVICE	(W-2)*, W-15-A2, (W-27)*	Ⓦ
GATE VALVE AND BOX W/BYPASS 12" & 16" G.V.s GATE VALVE COVER ONLY	SDW 109, W-19-A, W-12-B, (W-26)* I-27	8" G.V.
FIRE HYDRANT ASSEMBLY	W-10, W-11-A	F.H.
BLOW-OFF ASSEMBLY	SDW-102	B.O.
MULTI SERVICE FITTING	(W-60)*	
2" AIR VALVE	(W-13)*	2" A.V.
STORM DRAIN	D-60	
CURB INLET TYPE B, B-1	D-2	
GRAVITY HEADWALL	D-32	
STORM DRAIN CLEAN OUT	D-9, D-10	
CONCRETE LUG	D-63	
WING TYPE HEADWALL	D-35	
CURB OUTLET A & B	D-25	
STREET NAME SIGN	SDM-102, SDM-103	
STREET LIGHT SYSTEM	E-1, E-2, E-4	
BARRICADES AND GUARD POST	M-9	

MAINTAINING TRAFFIC. THE CONTRACTOR SHALL MAINTAIN ONE LANE OF TRAFFIC IN EACH DIRECTION DURING WORKING HOURS OF 8:30 AM TO 3:30 PM AND SHALL MAINTAIN FULL WIDTH OF TRAVEL LANES OF EXISTING ROADWAY DURING THE HOURS OF 3:30 PM AND 8:30 AM. ON SATURDAY, SUNDAY, AND DESIGNATED LEGAL HOLIDAYS, AND WHEN CONSTRUCTION OPERATIONS ARE NOT ACTIVELY IN PROGRESS ON WORKING DAYS THE CONTRACTOR SHALL MAINTAIN ALL TRAVEL LANES OF THE ROADWAY. ANY DEVIATION OF THESE REQUIREMENTS SHALL BE IN ACCORDANCE WITH SECTION 7-10.3 OF THE STANDARD SPECIFICATIONS.

◉	INDICATES CONTROL MONUMENTS
✖	INDICATES STREET NAME SIGN
	INDICATES FIRE HYDRANT
☐	INDICATES STREET LIGHT SYSTEM
---○---	INDICATES SEWER MAIN & MANHOLE
②	INDICATES IMPROVEMENT PLAN SHEET NO.
	INDICATES STORM DRAIN

KEY MAP SYMBOLS

	A.D.T	
BEYER BOULEVARD	20,000	4" A.C. ON 10½" C.T.B.
EAST BEYER BOULEVARD	10,000	4" A.C. ON 10½" C.T.B.
ENCHANTED PLACE	CUL-DE-SAC	2" A.C. ON 5" C.T.B.
FANTASY LANE	CUL-DE-SAC	2" A.C. ON 5" C.T.B.
FILIOI AVENUE	CUL-DE-SAC	2" A.C. ON 5" C.T.B.
ENRIGHT DRIVE	LOCAL	2" A.C. ON 5" C.T.B.
DELANY DRIVE	2,000	2" A.C. ON 5" C.T.B.

TELEPHONE, GAS & ELECTRIC NOTES

1. NOTICE: ALL TELEPHONE SERVICES WITH THIS SUBDIVISION ARE "UNDERGROUND INSTALLATION". FOR LOCATION OF CABLES AND APPURTENANCES CONTACT THE PACIFIC TELEPHONE & TELEGRAPH CO.
2. NOTICE: ALL ELECTRICAL AND GAS SERVICES WITHIN THIS SUBDIVISION ARE "UNDERGROUND INSTALLATION". FOR LOCATION OF ELECTRICAL CABLES AND GAS PIPING AND APPURTENANCES, CONTACT SAN DIEGO GAS & ELECTRIC COMPANY.

STREET LIGHT NOTES

1. CONTRACTOR INSTALLING THE STREET LIGHTING DISTRIBUTION SYSTEM SHALL NOTIFY FIELD ENGINEER, , PHONE 236-5520 A MINIMUM OF 3 DAYS BEFORE BEGINNING OF WORK FOR APPROVAL OF CONDUIT LOCATION AND REQUIREMENTS.
2. CONTRACTOR SHALL VERIFY ALL STREET LIGHTS ARE BURNING AND NOTIFY FIELD ENGINEER, , PHONE 236-5520 A MINIMUM OF 4 WEEKS AFTER FINAL ELECTRICAL INSPECTION.

8 — 9500 LUMEN 100 WATT TYPE III HIGH PRESSURE SODIUM VAPOR WITH CUTOFF FIXTURE
3 — 16000 LUMEN 150 WATT TYPE III HIGH PRESSURE SODIUM VAPOR WITH CUTOFF FIXTURE AND TYPE XV STEEL STANDARD

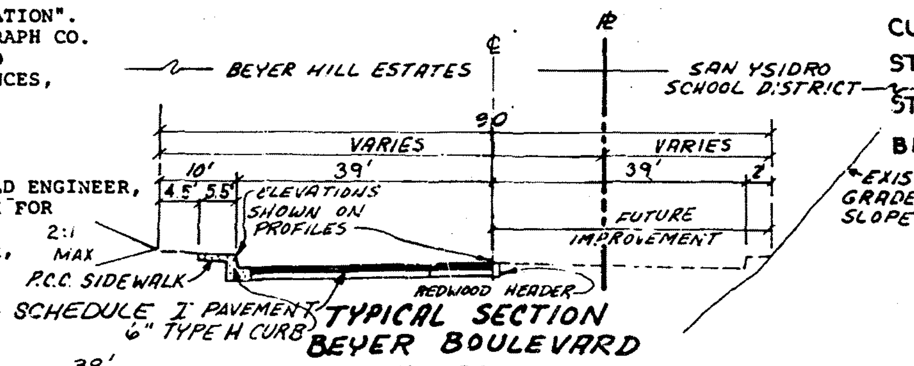

TYPICAL SECTION BEYER BOULEVARD
NO SCALE

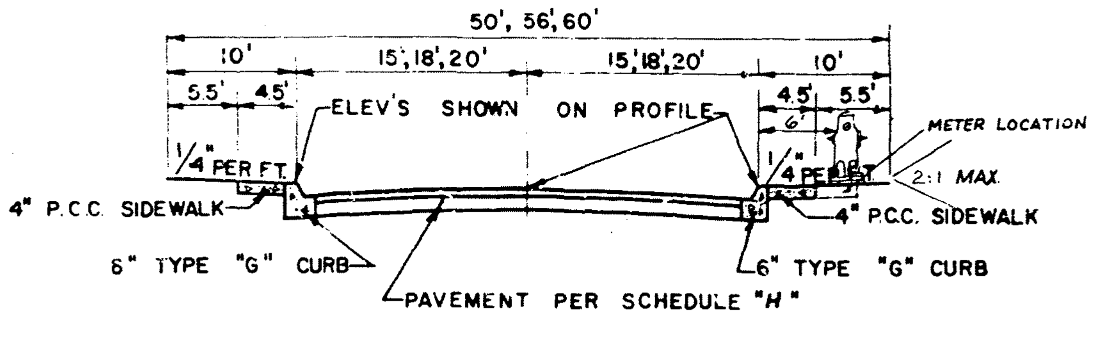

ALL INTERIOR TYPICAL STREET SECTION (NOT TO SCALE)

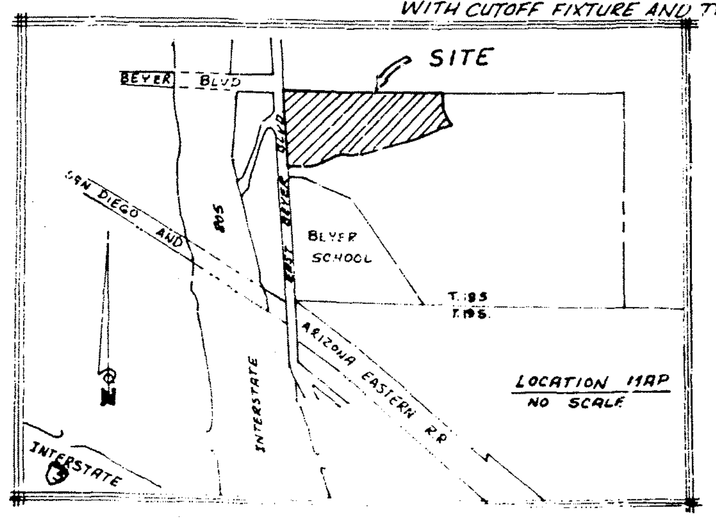

LOCATION MAP
NO SCALE

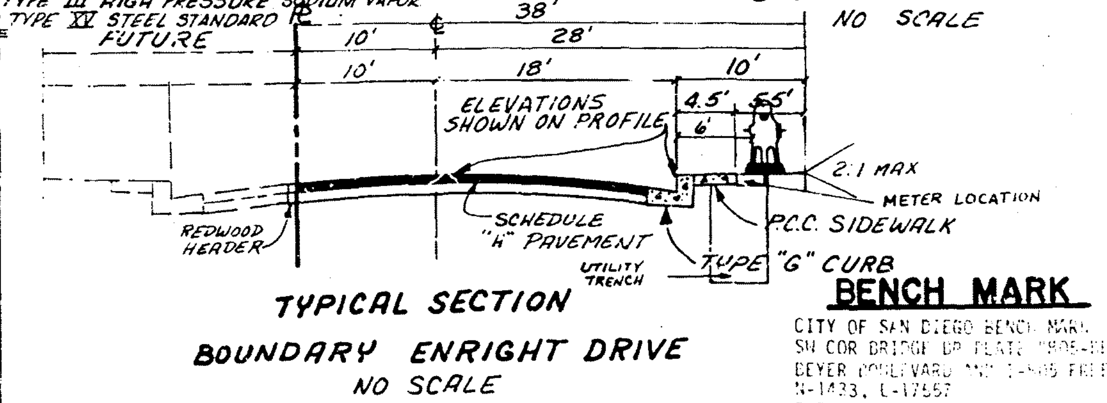

TYPICAL SECTION
BOUNDARY ENRIGHT DRIVE
NO SCALE

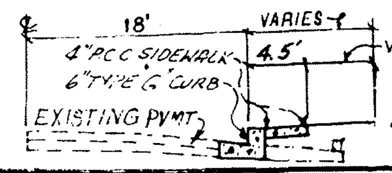

TYPICAL SECTION
EAST BEYER BLVD.
NO SCALE

BENCH MARK

CITY OF SAN DIEGO BENCH MARK
SW COR BRIDGE DP PLATE "805-BEYER"
BEYER BOULEVARD AND I-805 FREEWAY
N-1433, E-17557
ELEV. = 158.553 [illegible]

"AS BUILT"
DATE:

THESE PLANS ARE NOT TO BE USED FOR CONSTRUCTION UNTIL THE NOTICE TO PROCEED OR A BONDED SUBDIVISION PERMIT HAS BEEN ISSUED BY THE CITY ENGINEER.

PRIVATE CONTRACT
ENGINEER OF WORK
ASSOCIATED ENGINEERS
3904 GROTON STREET
SAN DIEGO, CALIF. 92110
PHONE (714) 224-2467
RCE 25900
DATE 29 SEPT. 1978

PLANS FOR THE PUBLIC IMPROVEMENTS
IN AND ADJOINING
BEYER HILL ESTATES

CITY OF SAN DIEGO, CALIFORNIA
SHEET 1 OF 11 SHEETS
T.M. 77-219
W.O. NO. 70772
C R Lockhart 12-4-78
DATE
Jim Mueller 12-6-78

DESCRIPTION	BY	APPROVED	DATE	FILMED
ORIGINAL				
AS BUILT	APEC		3/15/83	

11-29-78
CONTROL
142-1755
LAMBERT COORDINATES
CONTRACTOR FGEN-HALL DATE STARTED 8-16-79
INSPECTOR CL 'ERA / STAVE DATE COMPLETED 12-28-82
17793-1-D
1131

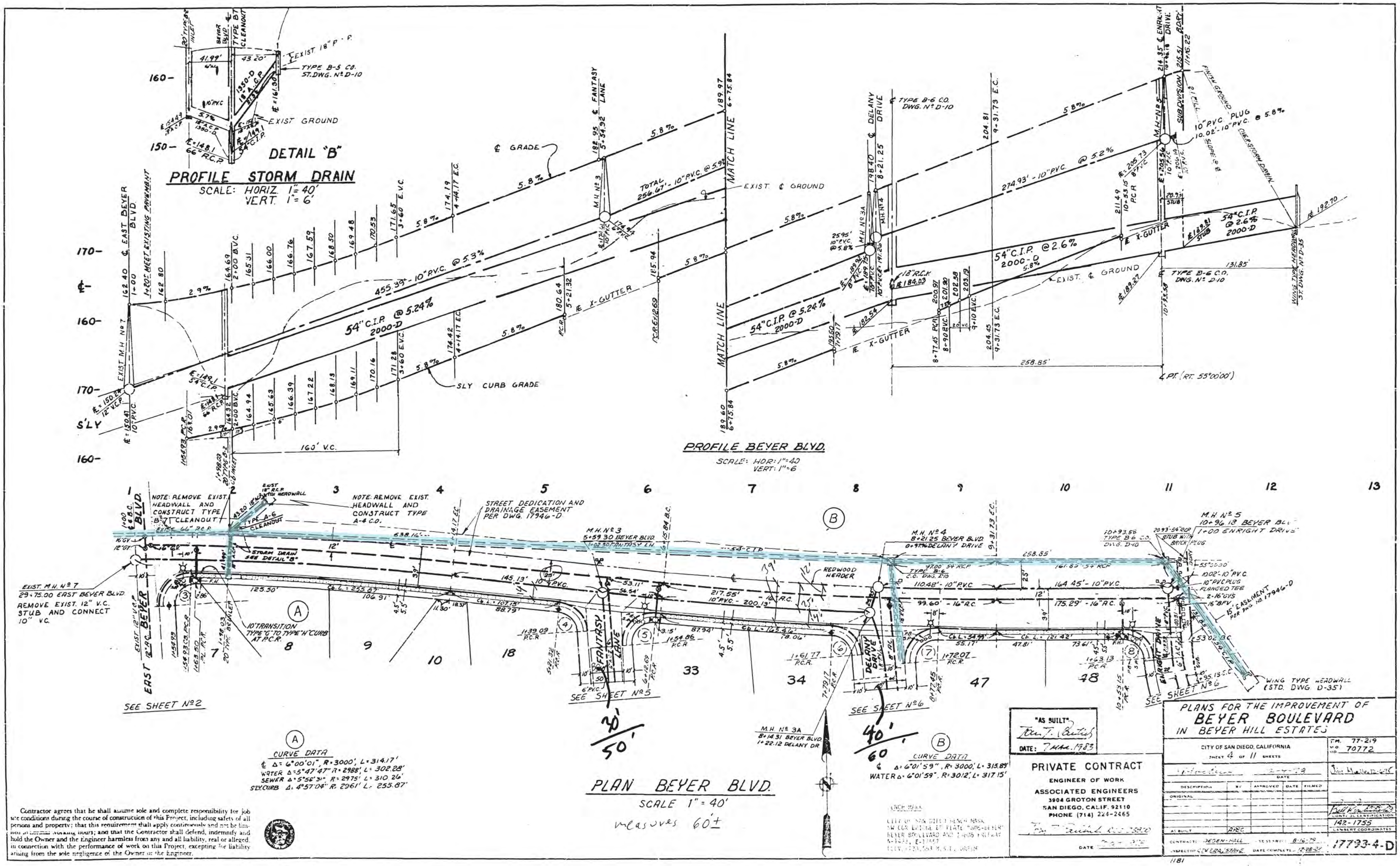

Ⓐ

CURVE DATA

℄ Δ = 6°00'01", R = 3000', L = 314.17'

WATER Δ = 5°47'47" R = 2988', L = 302.28'

SEWER Δ = 5°56'31" R = 2975' L = 310.26'

SLY CURB Δ = 4°57'04" R = 2961' L = 255.87'

Ⓑ

CURVE DATA

℄ Δ = 6°01'59", R = 3000', L = 315.89'

WATER Δ = 6°01'59", R = 3012', L = 317.15'

Contractor agrees that he shall assume sole and complete responsibility for job site conditions during the course of construction of this Project, including safety of all persons and property; that this requirement shall apply continuously and not be limited to normal working hours; and that the Contractor shall defend, indemnify and hold the Owner and the Engineer harmless from any and all liability, real or alleged, in connection with the performance of work on this Project, excepting for liability arising from the sole negligence of the Owner or the Engineer.

"AS BUILT"
Tom T. Bartich
DATE: 7 MAR. 1983

PRIVATE CONTRACT

ENGINEER OF WORK
ASSOCIATED ENGINEERS
3904 GROTON STREET
SAN DIEGO, CALIF. 92110
PHONE (714) 224-2465

DATE

PLANS FOR THE IMPROVEMENT OF
BEYER BOULEVARD
IN BEYER HILL ESTATES

CITY OF SAN DIEGO, CALIFORNIA
SHEET 4 OF 11 SHEETS

T.M. 77-219
W.O. NO. 70772

DATE 12-4-78

DESCRIPTION	BY	APPROVED	DATE	FILMED
ORIGINAL				
AS BUILT	AREC			

CONTROL CERTIFICATION
142-1755
LAMBERT COORDINATES

CONTRACTOR DEGEN-HALL DATE STARTED 8-16-79
INSPECTOR CEVERA/STAVE DATE COMPLETED 12-28-82

17793-4-D

1181

1

2

3

4

5

6

7

8

Attachment 2D-1

PRE DEVELOPMENT SWMM MODELING

1. SCHEMATIC
2. TABLE SUMMARY OF SUBCATCHMENT INPUTS
3. INPUT AND REPORT FILES

1. PRE PROJECT SWMM SCHEMATICS

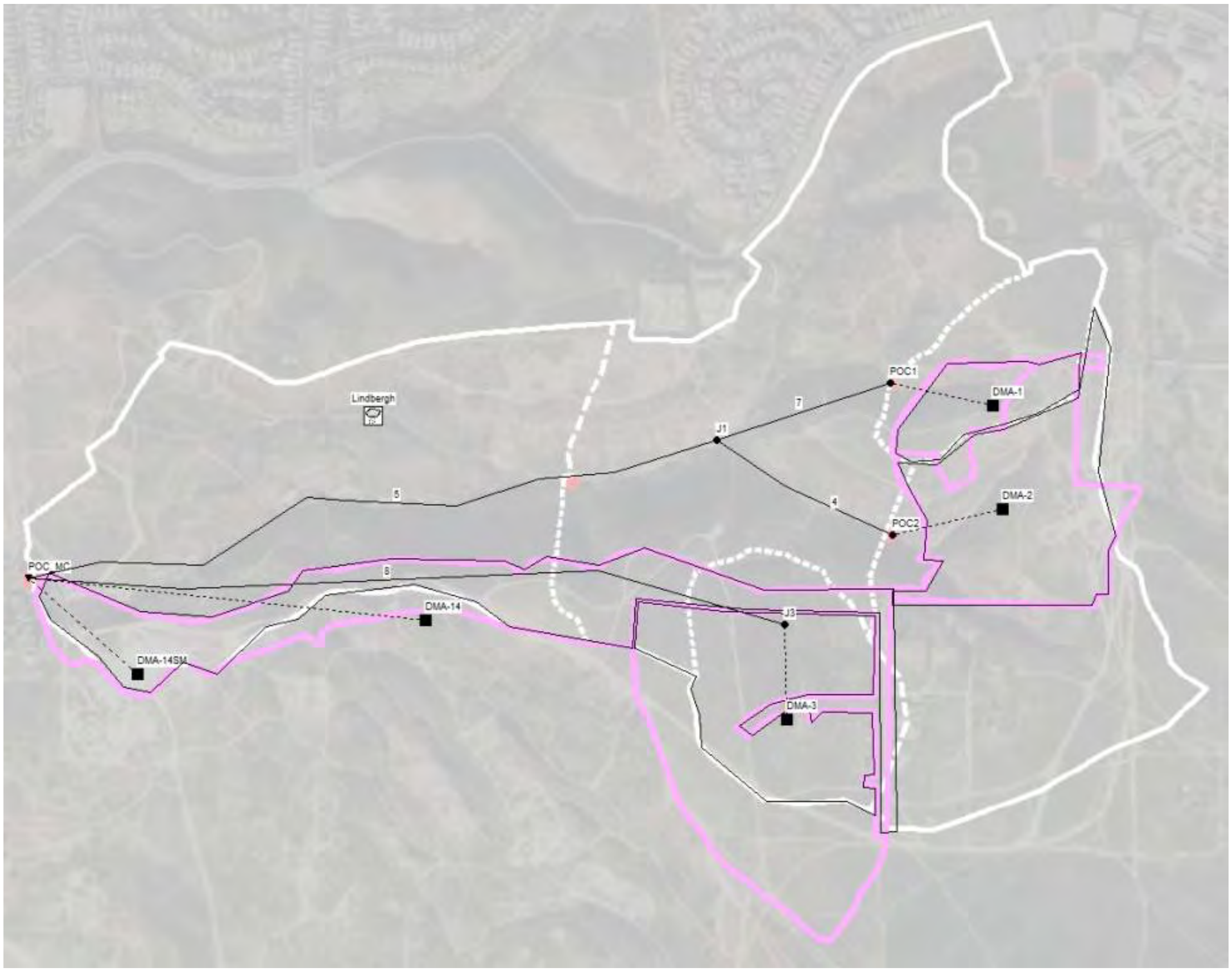

2. TABULAR SUMMARY OF INPUTS

Table G.1-1 Monthly Average Reference Evapotranspiration by ETo Zone
(inches/month and inches/day)for use in SWMM Models for Hydromodification Management Studies in San Diego County
CIMIS Zones 1, 4, 6, 9, and 16 (See CIMIS ETo Zone Map)

		CIMIS Reference Evapotranspiration (ETo) by Zone									
		Zone 1		Zone 4		Zone 6		Zone 9		Zone 16	
	Days Per Month	in/month	in/day	in/month	in/day	in/month	in/day	in/month	in/day	in/month	in/day
January	31	0.93	0.03	1.86	0.06	1.86	0.06	2.17	0.07	1.55	0.05
February	28	1.4	0.05	2.24	0.08	2.24	0.08	2.8	0.1	2.52	0.09
March	31	2.48	0.08	3.41	0.11	3.41	0.11	4.03	0.13	4.03	0.13
April	30	3.3	0.11	4.5	0.15	4.8	0.16	5.1	0.17	5.7	0.19
May	31	4.03	0.13	5.27	0.17	5.58	0.18	5.89	0.19	7.75	0.25
June	30	4.5	0.15	5.7	0.19	6.3	0.21	6.6	0.22	8.7	0.29
July	31	4.65	0.15	5.89	0.19	6.51	0.21	7.44	0.24	9.3	0.3
August	31	4.03	0.13	5.58	0.18	6.2	0.2	6.82	0.22	8.37	0.27
September	30	3.3	0.11	4.5	0.15	4.8	0.16	5.7	0.19	6.3	0.21
October	31	2.48	0.08	3.41	0.11	3.72	0.12	4.03	0.13	4.34	0.14
November	30	1.2	0.04	2.4	0.08	2.4	0.08	2.7	0.09	2.4	0.08
December	31	0.62	0.02	1.86	0.06	1.86	0.06	1.86	0.06	1.55	0.05

Appendix G: Guidance for Continuous Simulation

FIGURE G.1-2 California Irrigation Management Information System (CIMIS) "Reference Evapotranspiration Zones" brochure and map

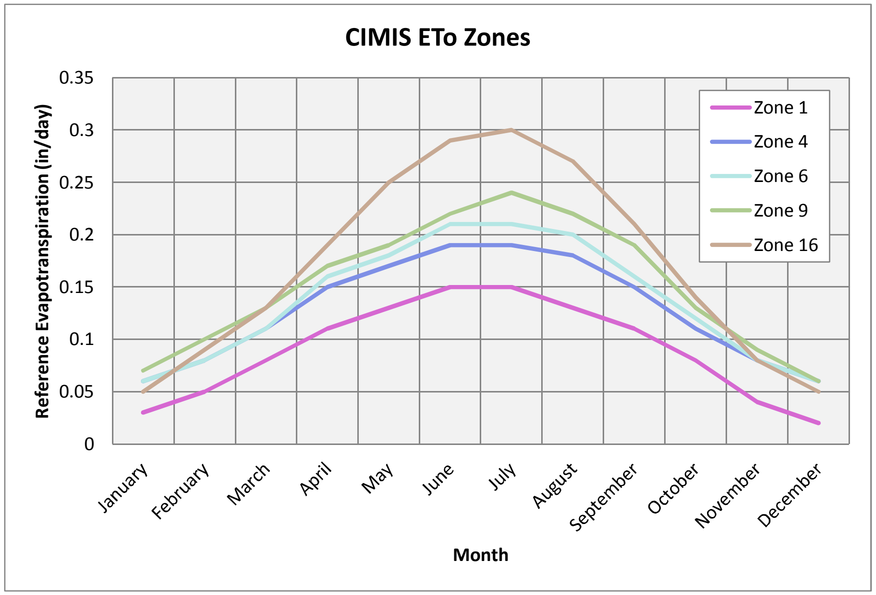

15013 - Southwest Village

SUMMARY OF SWMM SUBCATCHMENT INPUTS
PRE DEVELOPMENT

										Soil Parameters		
DMA ID	**AREA (SF)**	**AREA (AC.)**	**Pre Project % Compacted Soils (See Note 1)**	**Impervious (%)**	**AVERAGE OVERLAND FLOW LENGTH**	**Width**	**Average Basin Slope (along overland i.e. non-chanalized flowpath)**	**NPERV**	**Soil Type**	**Suction Head (inches)**	**Conductivity (inches/hour)**	**Initial Deficit (fraction)**
BASIN 100 - DRAINS TO OUTFALL 100												
1	317932	7.3	0%	0%	700	454	2.0%	0.10	D	9.00	0.025	0.30
SUM		**7.3**										
BASIN 200 - DRAINS TO OUTFALL 200												
2	1040210	23.9	0%	0%	700	1486	2.0%	0.10	D	9.00	0.025	0.30
SUM		**23.9**										
BASIN 1400 - DRAINS TO MOODY CANYON POC												
1	317932	7.3	0%	0%	700	454	2.0%	0.10	D	9.00	0.025	0.30
2	1040210	23.9	0%	0%	700	1486	2.0%	0.10	D	9.00	0.025	0.30
3	950535	21.8	0%	0%	700	1358	2.0%	0.10	D	9.00	0.025	0.30
14	466319	10.7	0%	0%	700	666	2.0%	0.10	D	9.00	0.025	0.30
14-SM	729731	16.8	0%	0%	700	1042	2.0%	0.10	D	9.00	0.025	0.30
SUM		**80.5**										

3. PRE DEVELOPMENT INPUT AND REPORT FILES

```
[TITLE]
;;Project Title/Notes
J-15013C Southwest Village VTM
Hydromodification Pre-Development
Model

[OPTIONS]
;;Option             Value
FLOW_UNITS           CFS
INFILTRATION         GREEN_AMPT
FLOW_ROUTING         KINWAVE
LINK_OFFSETS         DEPTH
MIN_SLOPE            0
ALLOW_PONDING        NO
SKIP_STEADY_STATE    NO

START_DATE           08/28/1951
START_TIME           01:00:00
REPORT_START_DATE    08/28/1951
REPORT_START_TIME    01:00:00
END_DATE             03/16/2008
END_TIME             20:00:00
SWEEP_START          01/01
SWEEP_END            12/31
DRY_DAYS             0
REPORT_STEP          01:00:00
WET_STEP             01:00:00
DRY_STEP             01:00:00
ROUTING_STEP         0:01:00

INERTIAL_DAMPING     PARTIAL
NORMAL_FLOW_LIMITED  BOTH
FORCE_MAIN_EQUATION  H-W
VARIABLE_STEP        0.75
LENGTHENING_STEP     0
MIN_SURFAREA         12.557
MAX_TRIALS           8
HEAD_TOLERANCE       0.005
SYS_FLOW_TOL         5
LAT_FLOW_TOL         5
MINIMUM_STEP         0.5
THREADS              1

[EVAPORATION]
;;Data Source    Parameters
;;-------------- ----------------
MONTHLY          0.06   0.08   0.11   0.16   0.18   0.21   0.21   0.20   0.16   0.12   0.08   0.06
DRY_ONLY         NO

[RAINGAGES]
;;Name           Format    Interval SCF      Source
;;-------------- --------- ------ ------ ----------
Lindbergh        INTENSITY 1:00     1.0      TIMESERIES TS-Lindbergh

[SUBCATCHMENTS]
;;Name           Rain Gage        Outlet           Area     %Imperv  Width    %Slope   CurbLen  SnowPack
;;-------------- ---------------- ---------------- -------- -------- -------- -------- -------- ----------------
DMA-1            Lindbergh        POC1             7.3      0        454      2        0
DMA-2            Lindbergh        POC2             23.9     0        1486     2        0
DMA-3            Lindbergh        J3               21.8     0        1358     2        0
DMA-14           Lindbergh        POC_MC           10.7     0        666      2        0
DMA-14SM         Lindbergh        POC_MC           16.8     0        1042     2        0

[SUBAREAS]
;;Subcatchment   N-Imperv   N-Perv     S-Imperv   S-Perv     PctZero    RouteTo    PctRouted
;;-------------- ---------- ---------- ---------- ---------- ---------- ---------- ----------
DMA-1            0.012      0.1        0.05       0.1        25         OUTLET
DMA-2            0.012      0.1        0.05       0.1        25         OUTLET
DMA-3            0.012      0.1        0.05       0.1        25         OUTLET
DMA-14           0.012      0.1        0.05       0.1        25         OUTLET
DMA-14SM         0.012      0.1        0.05       0.1        25         OUTLET

[INFILTRATION]
;;Subcatchment   Suction    Ksat       IMD
;;-------------- ---------- ---------- ----------
DMA-1            9.0        0.025      0.3
DMA-2            9.0        0.025      0.3
DMA-3            9.0        0.025      0.3
DMA-14           9.0        0.025      0.3
DMA-14SM         9          0.025      0.30

[JUNCTIONS]
;;Name           Elevation  MaxDepth   InitDepth  SurDepth   Aponded
;;-------------- ---------- ---------- ---------- ---------- ----------
```

```
POC1             0          0          0          0          0
POC2             0          0          0          0          0
J1               0          0          0          0          0
J3               0          0          0          0          0

[OUTFALLS]
;;Name           Elevation  Type       Stage Data       Gated    Route To
;;-------------- ---------- ---------- ---------------- -------- ----------------
POC_MC           0          FREE                        NO

[CONDUITS]
;;Name           From Node        To Node          Length     Roughness  InOffset   OutOffset  InitFlow   MaxFlow
;;-------------- ---------------- ---------------- ---------- ---------- ---------- ---------- ---------- ----------
4                POC2             J1               400        0.01       0          0          0          0
5                J1               POC_MC           400        0.01       0          0          0          0
7                POC1             J1               400        0.01       0          0          0          0
8                J3               POC_MC           400        0.01       0          0          0          0

[XSECTIONS]
;;Link           Shape        Geom1            Geom2      Geom3      Geom4      Barrels    Culvert
;;-------------- ------------ ---------------- ---------- ---------- ---------- ---------- ----------
4                DUMMY        0                0          0          0          1
5                DUMMY        0                0          0          0          1
7                DUMMY        0                0          0          0          1
8                DUMMY        0                0          0          0          1

[TIMESERIES]
;;Name           Date       Time       Value
;;-------------- ---------- ---------- ----------
TS-Lindbergh     FILE "\\cp.rickeng.com\projects\C_SD_J\15013 - South Otay\WaterResources\Hydromodification\SWMM\RainGauge\lindbergh.dat"

[REPORT]
;;Reporting Options
INPUT      NO
CONTROLS   NO
SUBCATCHMENTS ALL
NODES ALL
LINKS ALL

[TAGS]

[MAP]
DIMENSIONS -1470.588 0.000 11470.588 10000.000
Units      None

[COORDINATES]
;;Node           X-Coord            Y-Coord
;;-------------- ------------------ ------------------
POC1             7637.451           5943.455
POC2             7649.830           4513.719
J1               6002.045           5408.998
J3               6646.217           3680.982
POC_MC           -460.123           4110.429

[VERTICES]
;;Link           X-Coord            Y-Coord
;;-------------- ------------------ ------------------
4                6656.442           4979.550
5                5040.900           5102.249
5                4335.378           5040.900
5                3558.282           4795.501
5                2505.112           4846.626
5                2157.464           4877.301
5                1175.869           4233.129
5                214.724            4263.804
8                4887.526           4182.004
8                1002.045           4008.180

[Polygons]
;;Subcatchment   X-Coord            Y-Coord
;;-------------- ------------------ ------------------
DMA-1            7829.321           5206.925
DMA-1            8095.462           5225.493
DMA-1            8324.468           5460.687
DMA-1            8708.206           5565.906
DMA-1            9017.673           5664.935
DMA-1            9407.601           5887.751
DMA-1            9407.601           6098.189
DMA-1            9432.359           6228.165
DMA-1            9036.241           6122.946
DMA-1            8912.454           6153.893
DMA-1            8175.923           6129.135
DMA-1            7705.534           5516.391
DMA-1            7686.966           5293.575
```

```
DMA-2            7965.486           3987.626          
DMA-2            8045.947           4133.075          
DMA-2            8126.409           4278.524          
DMA-2            7946.918           4284.714          
DMA-2            7977.865           4656.074          
DMA-2            7804.563           4965.540          
DMA-2            7705.534           5194.546          
DMA-2            8070.705           5175.978          
DMA-2            8423.497           5460.687          
DMA-2            8702.017           5516.391          
DMA-2            9395.223           5807.290          
DMA-2            9550.102           6656.442          
DMA-2            9703.476           6278.119          
DMA-2            9591.002           5102.249          
DMA-2            9748.015           4507.530          
DMA-2            9679.932           4377.554          
DMA-2            9679.932           3956.679          
DMA-2            9568.524           3956.679          
DMA-2            9531.388           3863.839          
DMA-2            7656.019           3863.839          
DMA-2            7649.830           3993.815          
DMA-3            6070.975           3796.237          
DMA-3            7490.758           3760.742          
DMA-3            7470.475           3020.427          
DMA-3            6851.855           3015.356          
DMA-3            6507.051           2929.155          
DMA-3            6218.024           2721.258          
DMA-3            6334.649           2629.986          
DMA-3            6643.958           2853.095          
DMA-3            6872.138           2868.307          
DMA-3            6897.491           2751.682          
DMA-3            6998.904           2858.166          
DMA-3            7460.334           2842.954          
DMA-3            7485.687           2269.970          
DMA-3            7394.415           2254.758          
DMA-3            7384.274           2143.204          
DMA-3            7490.758           2138.133          
DMA-3            7495.828           1884.600          
DMA-3            7216.942           2011.367          
DMA-3            6471.556           2016.437          
DMA-3            5858.007           2523.503          
DMA-3            5837.724           2827.742          
DMA-3            5756.594           3071.133          
DMA-3            5807.300           3187.758          
DMA-3            5229.246           3456.503          
DMA-3            5264.740           3892.579          
DMA-14           -364.239           3945.146          
DMA-14           -272.215           4159.870          
DMA-14           596.906            3801.997          
DMA-14           1261.528           3750.872          
DMA-14           1977.274           3996.271          
DMA-14           2110.198           4180.320          
DMA-14           2938.419           4292.795          
DMA-14           4012.039           4272.345          
DMA-14           4196.088           4190.545          
DMA-14           4400.587           4313.245          
DMA-14           4901.610           4231.445          
DMA-14           5320.832           4395.044          
DMA-14           6445.577           4006.496          
DMA-14           7662.346           4016.721          
DMA-14           7693.021           1736.557          
DMA-14           7539.646           1726.332          
DMA-14           7529.421           3791.772          
DMA-14           6281.978           3822.447          
DMA-14           5239.033           3924.696          
DMA-14           5208.358           3454.349          
DMA-14           4052.939           3658.848          
DMA-14           3746.190           3894.022          
DMA-14           3163.368           4057.621          
DMA-14           2652.121           3996.271          
DMA-14           2324.922           3955.371          
DMA-14           2069.299           3730.422          
DMA-14           1772.775           3658.848          
DMA-14           1312.652           3208.950          
DMA-14           985.454            3321.424          
DMA-14           688.931            3035.126          
DMA-14           433.307            3086.251          
DMA-14           198.133            3372.549          
DMA-14           -251.765           3720.197          
DMA-14SM         561.499            3213.400          

[SYMBOLS]
;;Gage           X-Coord            Y-Coord           
;;-------------- ------------------ ------------------
```

```
Lindbergh        2791.287           5623.100


[BACKDROP]
FILE       "\\cp.rickeng.com\projects\C_SD_J\15013 - South Otay\WaterResources\Hydromodification\SWMM\MoodyCanyon\BG_image.jpg"
DIMENSIONS -1470.588 0.000 11470.588 10000.000
```

```
EPA STORM WATER MANAGEMENT MODEL - VERSION 5.1 (Build 5.1.012)
--------------------------------------------------------------

J-15013C SOUTH OTAY VTM 2
DMA 3 PRE-DEVELOPMENT CONDITION

WARNING 04: minimum elevation drop used for Conduit 4
WARNING 04: minimum elevation drop used for Conduit 5
WARNING 04: minimum elevation drop used for Conduit 7
WARNING 04: minimum elevation drop used for Conduit 8

*********************************************************
NOTE: The summary statistics displayed in this report are
based on results found at every computational time step,
not just on results from each reporting time step.
*********************************************************

****************
Analysis Options
****************
Flow Units ............... CFS
Process Models:
  Rainfall/Runoff ........ YES
  RDII ................... NO
  Snowmelt ............... NO
  Groundwater ............ NO
  Flow Routing ........... YES
  Ponding Allowed ........ NO
  Water Quality .......... NO
Infiltration Method ...... GREEN_AMPT
Flow Routing Method ...... KINWAVE
Starting Date ............ 08/28/1951 01:00:00
Ending Date .............. 03/16/2008 20:00:00
Antecedent Dry Days ...... 0.0
Report Time Step ......... 01:00:00
Wet Time Step ............ 01:00:00
Dry Time Step ............ 01:00:00
Routing Time Step ........ 60.00 sec


**************************        Volume         Depth
Runoff Quantity Continuity     acre-feet        inches
**************************     ---------       -------
Total Precipitation ......      3616.798       539.150
Evaporation Loss .........       104.250        15.540
Infiltration Loss ........      2951.749       440.012
Surface Runoff ...........       644.938        96.140
Final Storage ............         0.000         0.000
Continuity Error (%) .....        -2.326


**************************        Volume        Volume
Flow Routing Continuity        acre-feet      10^6 gal
**************************     ---------     ---------
Dry Weather Inflow .......         0.000         0.000
Wet Weather Inflow .......       644.938       210.163
Groundwater Inflow .......         0.000         0.000
RDII Inflow ..............         0.000         0.000
External Inflow ..........         0.000         0.000
External Outflow .........       644.938       210.163
Flooding Loss ............         0.000         0.000
Evaporation Loss .........         0.000         0.000
Exfiltration Loss ........         0.000         0.000
Initial Stored Volume ....         0.000         0.000
Final Stored Volume ......         0.000         0.000
Continuity Error (%) .....         0.000


********************************
Highest Flow Instability Indexes
********************************
All links are stable.


*************************
Routing Time Step Summary
*************************
Minimum Time Step           :    60.00 sec
Average Time Step           :    60.00 sec
Maximum Time Step           :    60.00 sec
Percent in Steady State     :     0.00
Average Iterations per Step :     1.00
Percent Not Converging      :     0.00
```

```
***************************
Subcatchment Runoff Summary
***************************

--------------------------------------------------------------------------------------------------------
                          Total      Total      Total      Total      Total       Total     Peak  Runoff
                         Precip      Runon       Evap      Infil     Runoff      Runoff   Runoff   Coeff
Subcatchment                 in         in         in         in         in    10^6 gal      CFS
--------------------------------------------------------------------------------------------------------
DMA-1                    539.15       0.00      15.54     440.03      96.13       19.05     8.02   0.178
DMA-2                    539.15       0.00      15.54     440.03      96.13       62.38    26.26   0.178
DMA-3                    539.15       0.00      15.54     439.97      96.20       56.95    23.96   0.178
DMA-14                   539.15       0.00      15.54     440.02      96.15       27.93    11.76   0.178
DMA-14SM                 539.15       0.00      15.54     440.04      96.08       43.83    18.44   0.178


******************
Node Depth Summary
******************

---------------------------------------------------------------------------------
                               Average  Maximum  Maximum  Time of Max    Reported
                                 Depth    Depth      HGL   Occurrence   Max Depth
Node                 Type         Feet     Feet     Feet  days hr:min        Feet
---------------------------------------------------------------------------------
POC1                 JUNCTION     0.00     0.00     0.00     0  00:00        0.00
POC2                 JUNCTION     0.00     0.00     0.00     0  00:00        0.00
J1                   JUNCTION     0.00     0.00     0.00     0  00:00        0.00
J3                   JUNCTION     0.00     0.00     0.00     0  00:00        0.00
POC_MC               OUTFALL      0.00     0.00     0.00     0  00:00        0.00


*******************
Node Inflow Summary
*******************

-------------------------------------------------------------------------------------------------
                                Maximum  Maximum                  Lateral       Total        Flow
                                Lateral    Total  Time of Max      Inflow      Inflow     Balance
                                 Inflow   Inflow   Occurrence      Volume      Volume       Error
Node                 Type           CFS      CFS  days hr:min    10^6 gal    10^6 gal     Percent
-------------------------------------------------------------------------------------------------
POC1                 JUNCTION      8.02     8.02  5218  08:01        19.1        19.1       0.000
POC2                 JUNCTION     26.26    26.26  5218  08:01        62.4        62.4       0.000
J1                   JUNCTION      0.00    34.28  5218  08:01           0        81.4       0.000
J3                   JUNCTION     23.96    23.96  5218  08:01        56.9        56.9       0.000
POC_MC               OUTFALL      30.20    88.44  5218  08:01        71.8         210       0.000


*********************
Node Flooding Summary
*********************

No nodes were flooded.


***********************
Outfall Loading Summary
***********************

-----------------------------------------------------------
                       Flow       Avg       Max       Total
                       Freq      Flow      Flow      Volume
Outfall Node           Pcnt       CFS       CFS    10^6 gal
-----------------------------------------------------------
POC_MC                 0.47      3.36     88.44     210.147
-----------------------------------------------------------
System                 0.47      3.36     88.44     210.147


********************
Link Flow Summary
********************

-----------------------------------------------------------------------------
                               Maximum  Time of Max   Maximum    Max/    Max/
                                |Flow|   Occurrence   |Veloc|    Full    Full
Link                 Type          CFS  days hr:min    ft/sec    Flow   Depth
-----------------------------------------------------------------------------
4                    DUMMY       26.26  5218  08:01
5                    DUMMY       34.28  5218  08:01
7                    DUMMY        8.02  5218  08:01
```

```
8                    DUMMY       23.96  5218  08:01


*************************
Conduit Surcharge Summary
*************************

No conduits were surcharged.


Analysis begun on:  Tue Mar 01 15:37:27 2022
Analysis ended on:  Tue Mar 01 15:38:23 2022
Total elapsed time: 00:00:56
```

Attachment 2D-2

POST DEVELOPMENT SWMM MODELING

1. POST PROJECT SWMM SCHEMATIC

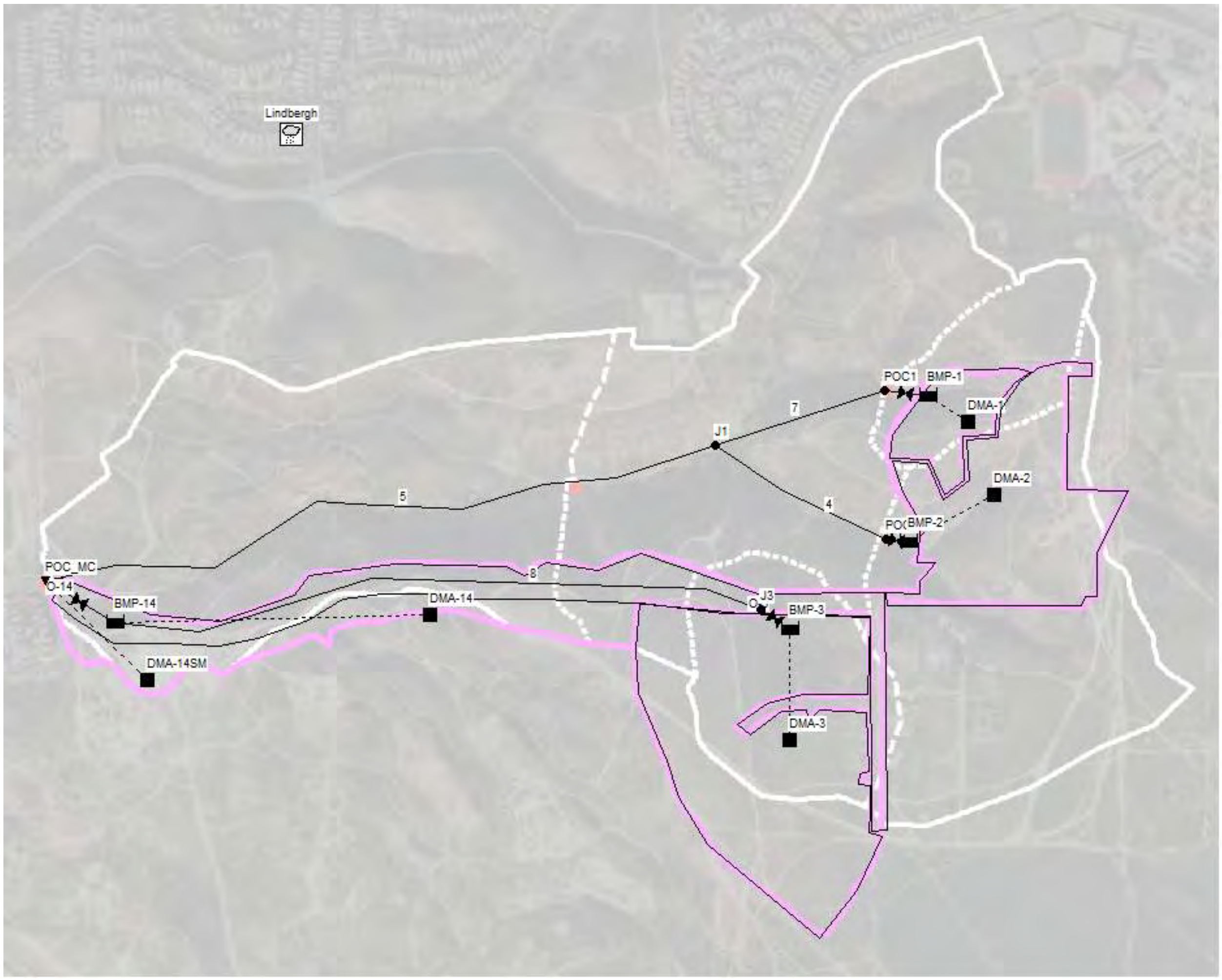

2. TABLE SUMMARY OF SUBCATCHMENT INPUTS

SUMMARY OF SWMM SUBCATCHMENT INPUTS
POST PROJECT

										Soil Parameters		
DMA ID	**AREA (SF)**	**AREA (AC.)**	**Pre Project % Compacted Soils (See Note 1)**	**Impervious (%)**	**AVERAGE OVERLAND FLOW LENGTH**	**Width**	**Average Basin Slope (along overland i.e. non-chanalized flowpath)**	**NPERV**	**Soil Type**	**Suction Head (inches)**	**Conductivity (inches/hour)**	**Initial Deficit (fraction)**
BASIN 100 - DRAINS TO OUTFALL 100												
1	257616	5.9	0%	75%	100	2576	2.0%	0.10	D	9.00	0.019	0.30
SUM	**257616.0**	**5.9**										
BASIN 200 - DRAINS TO OUTFALL 200												
2	980507	22.5	0%	75%	100	9805	2.0%	0.10	D	9.00	0.019	0.30
SUM	**980507.0**	**22.5**										
MOODY CANYON TOTAL IMPACTS												
1	257616	5.9	0%	75%	100	2576	2.0%	0.10	D	9.00	0.019	0.30
2	980507.00	22.5	0%	75%	100	9805	2.0%	0.10	D	9.00	0.019	0.30
3	1602829.00	36.8	0%	75%	100	16028	2.0%	0.10	D	9.00	0.019	0.30
14	549604.00	12.6	0%	80%	100	5496	2.0%	0.10	D	9.00	0.019	0.30
14-SM	1078774.00	24.8	0%	0%	700	1541	2.0%	0.10	D	9.00	0.025	0.30
SUM	**4469330.00**	**102.6**										

Summary of Diversions (Moody Canyon)			
POC	Area Pre	Area Post	Change in Area (Post-Pre)
1	7.3	5.9	-1.4
2	23.9	22.5	-1.4
M.C.	80.5	102.6	22.1

3. RATING AND STORAGE CURVES

BMP 1 – 3500 sq-ft x 5.67 ft Storm Trap Vault

Basin Characteristics	
WQ ponding depth (ft) =	3.50
Mulch layer (ft) =	0.00
Bioretention soil media (ft) =	0.00
Gravel choker layer (ft) =	0.00
Gravel layer (inc dead storage) (ft) =	0.00
Dead storage (ft)	0.00
Bottom surface area (ft2) =	3,290
Grade break elevation (ft) =	0.00
Depth of BMP (ft) =	5.67
Surface area @ grade break (ft2) =	3,290
Top surface area (ft2) =	3,290
Side Slope	0.0
Length	70
Average Width	47.00
AR	1.49
Longituduinal Slope	0.005

Outlet Works	
Low-flow Orifice (Restrictor)	
Num. of orifices =	1
Orifice invert elevation (ft) =	-1.00
Orifice diameter (in) =	1.750
Mid-flow Orifice (1st)	
Num. of orifices =	1
Orifice invert elevation (ft) =	3.50
Orifice diameter (in) =	6.000
Primary Overflow (2nd)	
Num. of orifices =	1
Orifice invert elevation (ft) =	5.67
Orifice diameter (in) =	24.00

Elevation (ft)	Area (sf)	Porosity	Effective Surface Area (sf)	Storage (Cumulative) (CF)	Discharge (cfs)
0.00	3290	1.00	0	0	0.08
0.25	3290	1.00	2115	294	0.09
0.50	3290	1.00	3290	1069	0.10
0.75	3290	1.00	3290	1892	0.10
1.00	3290	1.00	3290	2714	0.11
1.25	3290	1.00	3290	3537	0.12
1.50	3290	1.00	3290	4359	0.13
1.75	3290	1.00	3290	5182	0.13
2.00	3290	1.00	3290	6004	0.14
2.25	3290	1.00	3290	6827	0.14
2.50	3290	1.00	3290	7649	0.15
2.75	3290	1.00	3290	8472	0.15
3.00	3290	1.00	3290	9294	0.16
3.09	3290	1.00	3290	9459	0.16
3.25	3290	1.00	3290	10117	0.16
3.50	3290	1.00	3290	10939	0.169
3.75	3290	1.00	3290	11762	0.32
4.00	3290	1.00	3290	12584	0.60
4.25	3290	1.00	3290	13407	0.85
4.50	3290	1.00	3290	14229	1.01
4.75	3290	1.00	3290	15052	1.14
5.00	3290	1.00	3290	15874	1.25
5.25	3290	1.00	3290	16697	1.36
5.50	3290	1.00	3290	17519	1.45
5.75	3290	1.00	3290	18342	1.65
6.00	3290	1.00	3290	19164	2.52
6.25	3290	1.00	3290	19987	3.79
6.50	3290	1.00	3290	20809	5.35
6.75	3290	1.00	3290	21632	7.15
7.00	3290	1.00	3290	22454	9.16
7.25	3290	1.00	3290	23277	11.36
7.50	3290	1.00	3290	24099	13.73
7.75	3290	1.00	3290	24922	16.26

BMP 2 – Storm Trap Vault, 8500 sqft x 7.5ft

Basin Characteristics	
WQ ponding depth (ft) =	5.00
Mulch layer (ft) =	0.00
Bioretention soil media (ft) =	0.00
Gravel choker layer (ft) =	0.00
Gravel layer (inc dead storage) (ft) =	0.00
Dead storage (ft)	0.00
Bottom surface area (ft2) =	8,315
Grade break elevation (ft) =	0.00
Depth of BMP (ft) =	7.50
Surface area @ grade break (ft2) =	8,315
Top surface area (ft2) =	8,315
Side Slope	0.0
Length	131
Average Width	63.47
AR	2.06
Longituduinal Slope	0.005

Outlet Works	
Low-flow Orifice (Restrictor)	
Num. of orifices =	1
Orifice invert elevation (ft) =	-1.00
Orifice diameter (in) =	3.125
Mid-flow Orifice (1st)	
Num. of orifices =	1
Orifice invert elevation (ft) =	5.00
Orifice diameter (in) =	8.000
High Flow Orifice (2nd)	
Num. of orifices =	1
Orifice invert elevation (ft) =	6.00
Orifice diameter (in) =	18.00

Elevation (ft)	Area (sf)	Porosity	Effective Surface Area (sf)	Storage (Cumulative) (CF)	Discharge (cfs)
0.00	8315	1.00	0	0	0.24
0.25	8315	1.00	2856	397	0.27
0.50	8315	1.00	6030	1587	0.30
0.75	8315	1.00	8315	3513	0.33
1.00	8315	1.00	8315	5592	0.35
1.25	8315	1.00	8315	7671	0.37
1.50	8315	1.00	8315	9749	0.39
1.75	8315	1.00	8315	11828	0.42
2.00	8315	1.00	8315	13907	0.43
2.25	8315	1.00	8315	15986	0.45
2.50	8315	1.00	8315	18064	0.47
2.75	8315	1.00	8315	20143	0.49
3.00	8315	1.00	8315	22222	0.50
3.09	8315	1.00	8315	22638	0.51
3.25	8315	1.00	8315	24301	0.52
3.50	8315	1.00	8315	26379	0.54
3.75	8315	1.00	8315	28458	0.55
4.00	8315	1.00	8315	30537	0.57
4.25	8315	1.00	8315	32616	0.58
4.50	8315	1.00	8315	34694	0.59
4.75	8315	1.00	8315	36773	0.61
5.00	8315	1.00	8315	38852	0.62
5.25	8315	1.00	8315	40931	0.76
5.50	8315	1.00	8315	43009	1.33
5.75	8315	1.00	8315	45088	1.74
6.00	8315	1.00	8315	47167	2.04
6.25	8315	1.00	8315	49246	2.74
6.50	8315	1.00	8315	51324	3.76
6.75	8315	1.00	8315	53403	5.00
7.00	8315	1.00	8315	55482	6.42
7.25	8315	1.00	8315	57561	8.00
7.50	8315	1.00	8315	59639	9.71

BMP 3 – 15000sq ft x 10ft Storm Trap

Basin Characteristics	
WQ ponding depth (ft) =	5.00
Mulch layer (ft) =	0.00
Bioretention soil media (ft) =	0.00
Gravel choker layer (ft) =	0.00
Gravel layer (inc dead storage) (ft) =	0.00
Dead storage (ft)	0.00
Bottom surface area (ft2) =	14,100
Grade break elevation (ft) =	0.00
Depth of BMP (ft) =	14.00
Surface area @ grade break (ft2) =	14,100
Top surface area (ft2) =	14,100
Side Slope	0.0
Length	150
Average Width	94.00
AR	1.60
Longituduinal Slope	0.005

Outlet Works	
Low-flow Orifice (Restrictor)	
Num. of orifices =	2
Orifice invert elevation (ft) =	-1.00
Orifice diameter (in) =	3.125
Mid-flow Orifice (1st)	
Num. of orifices =	1
Orifice invert elevation (ft) =	10.00
Orifice diameter (in) =	30.000
Mid-flow Orifice (2nd)	
Num. of orifices =	1
Orifice invert elevation (ft) =	10.00
Orifice diameter (in) =	42.00
Mid-flow Opening (1st)	
Num. of opening =	1
Opening invert elevation (ft) =	5.00
Opening Height (in) =	15.00
Opening Width (in) =	9
Mid-flow Opening (4th)	
Num. of opening =	1
Opening invert elevation (ft) =	8.00
Opening Height (in) =	12.00
Opening Width (in) =	24

Elevation (ft)	Area (sf)	Porosity	Effective Surface Area (sf)	Storage (Cumulative) (CF)	Discharge (cfs)
0.00	14100	1.00	0	0	0.48
0.25	14100	1.00	4230	588	0.54
0.50	14100	1.00	8930	2350	0.60
0.75	14100	1.00	13630	5288	0.65
1.00	14100	1.00	14100	8813	0.70
1.25	14100	1.00	14100	12338	0.75
1.50	14100	1.00	14100	15863	0.79
1.75	14100	1.00	14100	19388	0.83
2.00	14100	1.00	14100	22913	0.87
2.25	14100	1.00	14100	26438	0.91
2.50	14100	1.00	14100	29963	0.94
2.75	14100	1.00	14100	33488	0.98
3.00	14100	1.00	14100	37013	1.01
3.09	14100	1.00	14100	37718	1.02
3.25	14100	1.00	14100	40538	1.04
3.50	14100	1.00	14100	44063	1.07
3.75	14100	1.00	14100	47588	1.10
4.00	14100	1.00	14100	51113	1.13
4.25	14100	1.00	14100	54638	1.16
4.50	14100	1.00	14100	58163	1.19
4.75	14100	1.00	14100	61688	1.22
5.00	14100	1.00	14100	65213	1.24
5.25	14100	1.00	14100	68738	1.55
5.50	14100	1.00	14100	72263	2.09
5.75	14100	1.00	14100	75788	2.78
6.00	14100	1.00	14100	79313	3.59
6.25	14100	1.00	14100	82838	4.51
6.50	14100	1.00	14100	86363	5.53
6.75	14100	1.00	14100	89888	6.20
7.00	14100	1.00	14100	93413	6.73
7.25	14100	1.00	14100	96938	7.22
7.50	14100	1.00	14100	100463	7.67
7.75	14100	1.00	14100	103988	8.09
8.00	14100	1.00	14100	107513	8.48
8.25	14100	1.00	14100	111038	9.61
8.50	14100	1.00	14100	114563	11.35
8.75	14100	1.00	14100	118088	13.47
9.00	14100	1.00	14100	121613	15.90
9.25	14100	1.00	14100	125138	18.57
9.50	14100	1.00	14100	128663	20.17
9.75	14100	1.00	14100	132188	21.61
10.00	14100	1.00	14100	135713	22.93

BMP 14 – 15500 sqft Biofiltration Basin

Outlet Works	
Low-flow Orifice (Restrictor)	
Num. of orifices =	2
Orifice invert elevation (ft) =	-0.25
Orifice diameter (in) =	4.375
Mid-flow Orifice (1st)	
Num. of orifices =	2
Orifice invert elevation (ft) =	4.00
Orifice diameter (in) =	6.000
Mid-flow Orifice (2nd)	
Num. of orifices =	0
Orifice invert elevation (ft) =	7.50
Orifice diameter (in) =	6.00
Mid-flow Opening - Horizontal (3rd)	
Num. of opening =	1
Opening invert elevation (ft) =	5.50
Opening Height (in) =	6.30
Opening Width (in) =	111
Mid-flow Opening (4th)	
Num. of opening =	1
Opening invert elevation (ft) =	6.50
Opening Height (in) =	18.00
Opening Width (in) =	48
Primary Overflow Outlet (4th)	
Num. of opening =	1
Opening invert elevation (ft) =	7.50
Opening Height (in) =	6.00
Opening Width (in) =	192
Secondary Overflow Outlet	
Outlet invert elevation (ft) =	10.00
B (ft) =	50.0

Basin Characteristics	
WQ ponding depth (ft) =	1.00
Mulch layer (ft) =	0.25
Bioretention soil media (ft) =	1.50
Gravel choker layer (ft) =	0.50
Gravel layer (inc dead storage) (ft) =	1.00
Dead storage (ft)	0.25
Bottom surface area (ft2) =	15,500
Grade break elevation (ft) =	3.00
Depth of BMP (ft) =	7.00
Surface area @ grade break (ft2) =	15,500
Top surface area (ft2) =	20,776
Side Slope	3.0
Length	150
Average Width	103.33
AR	1.45
Longituduinal Slope	0.000

Elevation (ft)	Area (sf)	Porosity	Effective Surface Area (sf)	Storage (Cumulative) (CF)	Discharge (cfs)
0.00	15500	0.40	0	0	0.21
0.25	15500	0.40	6200	1550	0.57
0.50	15500	0.40	6200	3100	0.76
0.75	15500	0.40	6200	4650	0.91
1.00	15500	0.40	6200	6200	1.04
1.25	15500	0.40	3100	6975	1.15
1.50	15500	0.20	3100	7750	1.26
1.75	15500	0.20	3100	8525	1.36
2.00	15500	0.20	3100	9300	1.45
2.25	15500	0.20	3100	10075	1.53
2.50	15500	0.20	3100	10850	1.61
2.75	15500	0.20	3100	11625	1.69
3.00	15500	1.00	3100	12400	1.76
3.09	15577	1.00	15536	13177	1.78
3.25	15883	1.00	15844	16323	1.83
3.50	16266	1.00	16230	20341	1.90
3.75	16649	1.00	16621	24457	1.96
4.00	17032	1.00	17016	28672	2.03
4.25	17415	1.00	17416	32986	2.28
4.50	17798	1.00	17820	37400	3.09
4.75	18181	1.00	18229	41917	3.54
5.00	18564	1.00	18642	46536	3.90
5.25	18947	1.00	19060	51259	4.21
5.50	19330	1.00	19483	56087	4.49
5.75	19713	1.00	19909	61022	8.21
6.00	20096	1.00	20341	66064	14.79
6.25	20479	1.00	20776	71214	23.23
6.50	20862	1.00	21217	76474	28.80
6.75	21245	1.00	21662	81845	34.76
7.00	21628	1.00	22111	87328	42.93
7.25	22011	1.00	22565	92924	52.52
7.50	22394	1.00	23023	98633	63.24
7.75	22777	1.00	23486	104458	74.96
8.00	23160	1.00	23953	110400	87.58
8.25	23543	1.00	24425	116459	101.02
8.50	23926	1.00	24901	122636	111.94

4. POST PROJECT MODELS INPUT AND REPORT FILES

```
[TITLE]
;;Project Title/Notes
J-15013C SOUTH OTAY VTM 2
MOODY CANYON - POST DEVELOPMENT
MODEL

[OPTIONS]
;;Option             Value
FLOW_UNITS           CFS
INFILTRATION         GREEN_AMPT
FLOW_ROUTING         KINWAVE
LINK_OFFSETS         DEPTH
MIN_SLOPE            0
ALLOW_PONDING        NO
SKIP_STEADY_STATE    NO

START_DATE           08/28/1951
START_TIME           01:00:00
REPORT_START_DATE    08/28/1951
REPORT_START_TIME    01:00:00
END_DATE             03/16/2008
END_TIME             20:00:00
SWEEP_START          01/01
SWEEP_END            12/31
DRY_DAYS             0
REPORT_STEP          01:00:00
WET_STEP             01:00:00
DRY_STEP             01:00:00
ROUTING_STEP         0:01:00

INERTIAL_DAMPING     PARTIAL
NORMAL_FLOW_LIMITED  BOTH
FORCE_MAIN_EQUATION  H-W
VARIABLE_STEP        0.75
LENGTHENING_STEP     0
MIN_SURFAREA         12.557
MAX_TRIALS           8
HEAD_TOLERANCE       0.005
SYS_FLOW_TOL         5
LAT_FLOW_TOL         5
MINIMUM_STEP         0.5
THREADS              4

[EVAPORATION]
;;Data Source    Parameters
;;-------------- ----------------
MONTHLY          0.06   0.08   0.11   0.16   0.18   0.21   0.21   0.20   0.16   0.12   0.08   0.06
DRY_ONLY         NO

[RAINGAGES]
;;Name           Format    Interval SCF      Source
;;-------------- --------- ------ ------ ----------
Lindbergh        INTENSITY 1:00     1.0      TIMESERIES TS-Lindbergh

[SUBCATCHMENTS]
;;Name           Rain Gage        Outlet           Area     %Imperv  Width    %Slope   CurbLen  SnowPack
;;-------------- ---------------- ---------------- -------- -------- -------- -------- -------- ----------------
DMA-1            Lindbergh        BMP-1            5.9      75       2578     2        0
DMA-2            Lindbergh        BMP-2            22.7     75       9874     2        0
DMA-3            Lindbergh        BMP-3            38.3     75       16669    2        0
DMA-14           Lindbergh        BMP-14           14.6     85       6377     2        0
DMA-14SM         Lindbergh        POC_MC           22.2     0        1209     2        0

[SUBAREAS]
;;Subcatchment   N-Imperv   N-Perv     S-Imperv   S-Perv     PctZero    RouteTo    PctRouted
;;-------------- ---------- ---------- ---------- ---------- ---------- ---------- ----------
DMA-1            0.012      0.1        0.05       0.1        25         OUTLET
DMA-2            0.012      0.1        0.05       0.1        25         OUTLET
DMA-3            0.012      0.1        0.05       0.1        25         OUTLET
DMA-14           0.012      0.1        0.05       0.1        25         OUTLET
DMA-14SM         0.012      0.1        0.05       0.1        25         OUTLET

[INFILTRATION]
;;Subcatchment   Suction    Ksat       IMD
;;-------------- ---------- ---------- ----------
DMA-1            9.0        0.019      0.3
DMA-2            9.0        0.019      0.3
DMA-3            9.0        0.019      0.3
```

```
DMA-14           9.0        0.019      0.3
DMA-14SM         9.0        0.025      0.3

[JUNCTIONS]
;;Name           Elevation  MaxDepth   InitDepth  SurDepth   Aponded
;;-------------- ---------- ---------- ---------- ---------- ----------
POC1             0          0          0          0          0
POC2             0          0          0          0          0
J1               0          0          0          0          0
J3               0          0          0          0          0

[OUTFALLS]
;;Name           Elevation  Type       Stage Data       Gated    Route To
;;-------------- ---------- ---------- ---------------- -------- ----------------
POC_MC           0          FREE                        NO

[STORAGE]
;;Name           Elev.    MaxDepth   InitDepth  Shape      Curve Name/Params            N/A      Fevap    Psi      Ksat     IMD

;;-------------- -------- ---------- ----------- ---------- ---------------------------- -------- --------          --------
--------
BMP-1            0        10         0          TABULAR    SC-1                         0        0
BMP-2            0        10         0          TABULAR    SC-2                         0        0
BMP-3            0        15         0          TABULAR    SC-3                         0        0
BMP-14           0        8.5        0          TABULAR    SC-14                        0        0

[CONDUITS]
;;Name           From Node        To Node          Length     Roughness  InOffset   OutOffset  InitFlow   MaxFlow
;;-------------- ---------------- ---------------- ---------- ---------- ---------- ---------- ---------- ----------
4                POC2             J1               400        0.01       0          0          0          0
5                J1               POC_MC           400        0.01       0          0          0          0
7                POC1             J1               400        0.01       0          0          0          0
8                J3               BMP-14           400        0.01       0          0          0          0

[OUTLETS]
;;Name           From Node        To Node          Offset     Type            QTable/Qcoeff    Qexpon     Gated
;;-------------- ---------------- ---------------- ---------- --------------- ---------------- ---------- --------
O-1              BMP-1            POC1             0          TABULAR/DEPTH   RC-1                        NO
O-2              BMP-2            POC2             0          TABULAR/DEPTH   RC-2                        NO
O-3              BMP-3            J3               0          TABULAR/DEPTH   RC-3                        NO
O-14             BMP-14           POC_MC           0          TABULAR/DEPTH   RC-14                       NO

[XSECTIONS]
;;Link           Shape        Geom1            Geom2      Geom3      Geom4      Barrels    Culvert
;;-------------- ------------ ---------------- ---------- ---------- ---------- ---------- ----------
4                DUMMY        0                0          0          0          1
5                DUMMY        0                0          0          0          1
7                DUMMY        0                0          0          0          1
8                DUMMY        0                0          0          0          1

[CURVES]
;;Name           Type       X-Value    Y-Value
;;-------------- ---------- ---------- ----------
RC-1             Rating     0.00       0.077
RC-1                        0.25       0.087
RC-1                        0.50       0.096
RC-1                        0.75       0.104
RC-1                        1.00       0.112
RC-1                        1.25       0.119
RC-1                        1.50       0.125
RC-1                        1.75       0.132
RC-1                        2.00       0.138
RC-1                        2.25       0.143
RC-1                        2.50       0.149
RC-1                        2.75       0.154
RC-1                        3.00       0.159
RC-1                        3.09       0.160
RC-1                        3.25       0.164
RC-1                        3.50       0.169
RC-1                        3.75       0.321
RC-1                        4.00       0.595
RC-1                        4.25       0.852
RC-1                        4.50       1.006
RC-1                        4.75       1.137
RC-1                        5.00       1.253
RC-1                        5.25       1.358
RC-1                        5.50       1.455
RC-1                        5.75       1.651
```

```
RC-1                        6.00       2.523
RC-1                        6.25       3.792
RC-1                        6.50       5.350
RC-1                        6.75       7.149
RC-1                        7.00       9.159
RC-1                        7.25       11.358
RC-1                        7.50       13.730
RC-1                        7.75       16.264
RC-1                        8.00       18.949
RC-1                        8.25       21.263
RC-1                        8.50       22.770
RC-1                        8.75       24.180
RC-1                        9.00       25.510
RC-1                        9.25       26.771
RC-1                        9.50       27.974
RC-1                        9.75       29.126
RC-1                        10.00      30.233
RC-1                        10.25      31.300
RC-1                        10.40      31.923
RC-1                        10.75      33.331
;
RC-2             Rating     0.00       0.239
RC-2                        0.25       0.271
RC-2                        0.50       0.300
RC-2                        0.75       0.326
RC-2                        1.00       0.351
RC-2                        1.25       0.373
RC-2                        1.50       0.395
RC-2                        1.75       0.415
RC-2                        2.00       0.434
RC-2                        2.25       0.453
RC-2                        2.50       0.471
RC-2                        2.75       0.488
RC-2                        3.00       0.505
RC-2                        3.09       0.508
RC-2                        3.25       0.521
RC-2                        3.50       0.536
RC-2                        3.75       0.551
RC-2                        4.00       0.566
RC-2                        4.25       0.580
RC-2                        4.50       0.594
RC-2                        4.75       0.608
RC-2                        5.00       0.621
RC-2                        5.25       0.759
RC-2                        5.50       1.333
RC-2                        5.75       1.745
RC-2                        6.00       2.045
RC-2                        6.25       2.735
RC-2                        6.50       3.761
RC-2                        6.75       5.004
RC-2                        7.00       6.424
RC-2                        7.25       7.997
RC-2                        7.50       9.709
RC-2                        7.75       13.423
RC-2                        8.00       18.325
RC-2                        8.25       23.809
RC-2                        8.50       30.032
RC-2                        8.75       36.899
RC-2                        9.00       44.344
RC-2                        9.25       52.321
RC-2                        9.50       60.793
RC-2                        9.75       69.731
RC-2                        10.00      79.108
RC-2                        10.25      88.906
RC-2                        10.40      94.978
RC-2                        10.75      109.689
;
RC-3             Rating     0.00       0.478
RC-3                        0.25       0.543
RC-3                        0.50       0.600
RC-3                        0.75       0.653
RC-3                        1.00       0.701
RC-3                        1.25       0.747
RC-3                        1.50       0.790
RC-3                        1.75       0.830
RC-3                        2.00       0.869
RC-3                        2.25       0.906
RC-3                        2.50       0.942
```

```
RC-3                        2.75       0.976
RC-3                        3.00       1.009
RC-3                        3.09       1.016
RC-3                        3.25       1.041
RC-3                        3.50       1.072
RC-3                        3.75       1.102
RC-3                        4.00       1.132
RC-3                        4.25       1.161
RC-3                        4.50       1.189
RC-3                        4.75       1.216
RC-3                        5.00       1.243
RC-3                        5.25       1.550
RC-3                        5.50       2.090
RC-3                        5.75       2.781
RC-3                        6.00       3.594
RC-3                        6.25       4.513
RC-3                        6.50       5.526
RC-3                        6.75       6.204
RC-3                        7.00       6.732
RC-3                        7.25       7.216
RC-3                        7.50       7.665
RC-3                        7.75       8.086
RC-3                        8.00       8.484
RC-3                        8.25       9.613
RC-3                        8.50       11.345
RC-3                        8.75       13.468
RC-3                        9.00       15.904
RC-3                        9.25       18.566
RC-3                        9.50       20.168
RC-3                        9.75       21.606
RC-3                        10.00      22.927
RC-3                        10.25      25.657
RC-3                        10.40      27.895
RC-3                        10.75      34.205
;
RC-14            Rating     0.00       0.215
RC-14                       0.25       0.567
RC-14                       0.50       0.757
RC-14                       0.75       0.909
RC-14                       1.00       1.039
RC-14                       1.25       1.154
RC-14                       1.50       1.259
RC-14                       1.75       1.355
RC-14                       2.00       1.446
RC-14                       2.25       1.531
RC-14                       2.50       1.611
RC-14                       2.75       1.688
RC-14                       3.00       1.761
RC-14                       3.09       1.775
RC-14                       3.25       1.831
RC-14                       3.50       1.899
RC-14                       3.75       1.964
RC-14                       4.00       2.028
RC-14                       4.25       2.276
RC-14                       4.50       3.094
RC-14                       4.75       3.544
RC-14                       5.00       3.901
RC-14                       5.25       4.209
RC-14                       5.50       4.486
RC-14                       5.75       8.209
RC-14                       6.00       14.789
RC-14                       6.25       23.225
RC-14                       6.50       28.795
RC-14                       6.75       34.757
RC-14                       7.00       42.931
RC-14                       7.25       52.515
RC-14                       7.50       63.243
RC-14                       7.75       74.963
RC-14                       8.00       87.579
RC-14                       8.25       101.018
RC-14                       8.50       111.940
RC-14                       8.75       119.916
RC-14                       9.00       127.329
RC-14                       9.25       134.290
RC-14                       9.50       140.877
RC-14                       9.75       147.147
RC-14                       10.00      153.143
RC-14                       10.25      177.650
```

```
RC-14                       10.40      200.198
RC-14                       10.75      267.228
;
SC-1             Storage    0.00       0.00
SC-1                        0.25       2115.00
SC-1                        0.50       3290.00
SC-1                        0.75       3290.00
SC-1                        1.00       3290.00
SC-1                        1.25       3290.00
SC-1                        1.50       3290.00
SC-1                        1.75       3290.00
SC-1                        2.00       3290.00
SC-1                        2.25       3290.00
SC-1                        2.50       3290.00
SC-1                        2.75       3290.00
SC-1                        3.00       3290.00
SC-1                        3.09       3290.00
SC-1                        3.25       3290.00
SC-1                        3.50       3290.00
SC-1                        3.75       3290.00
SC-1                        4.00       3290.00
SC-1                        4.25       3290.00
SC-1                        4.50       3290.00
SC-1                        4.75       3290.00
SC-1                        5.00       3290.00
SC-1                        5.25       3290.00
SC-1                        5.50       3290.00
SC-1                        5.75       3290.00
SC-1                        6.00       100.00
SC-1                        6.25       100.00
SC-1                        6.50       100.00
SC-1                        6.75       100.00
SC-1                        7.00       100.00
SC-1                        7.25       100.00
SC-1                        7.50       100.00
SC-1                        7.75       100.00
SC-1                        8.00       100.00
SC-1                        8.25       100.00
SC-1                        8.50       100.00
SC-1                        8.75       100.00
SC-1                        9.00       100.00
SC-1                        9.25       100.00
SC-1                        9.50       100.00
SC-1                        9.75       100.00
SC-1                        10.00      100.00
SC-1                        10.25      100.00
SC-1                        10.40      100.00
SC-1                        10.75      100.00
;
SC-2             Storage    0.00       0.00
SC-2                        0.25       2856.30
SC-2                        0.50       6029.96
SC-2                        0.75       8315.00
SC-2                        1.00       8315.00
SC-2                        1.25       8315.00
SC-2                        1.50       8315.00
SC-2                        1.75       8315.00
SC-2                        2.00       8315.00
SC-2                        2.25       8315.00
SC-2                        2.50       8315.00
SC-2                        2.75       8315.00
SC-2                        3.00       8315.00
SC-2                        3.09       8315.00
SC-2                        3.25       8315.00
SC-2                        3.50       8315.00
SC-2                        3.75       8315.00
SC-2                        4.00       8315.00
SC-2                        4.25       8315.00
SC-2                        4.50       8315.00
SC-2                        4.75       8315.00
SC-2                        5.00       8315.00
SC-2                        5.25       8315.00
SC-2                        5.50       8315.00
SC-2                        5.75       8315.00
SC-2                        6.00       8315.00
SC-2                        6.25       8315.00
SC-2                        6.50       8315.00
SC-2                        6.75       8315.00
```

```
SC-2                        7.00       8315.00
SC-2                        7.25       8315.00
SC-2                        7.50       100.00
SC-2                        7.75       100.00
SC-2                        8.00       100.00
SC-2                        8.25       100.00
SC-2                        8.50       100.00
SC-2                        8.75       100.00
SC-2                        9.00       100.00
SC-2                        9.25       100.00
SC-2                        9.50       100.00
SC-2                        9.75       100.00
SC-2                        10.00      100.00
SC-2                        10.25      100.00
SC-2                        10.40      100.00
SC-2                        10.75      100.00
;
SC-3             Storage    0.00       0.00
SC-3                        0.25       4230.00
SC-3                        0.50       8930.00
SC-3                        0.75       13630.00
SC-3                        1.00       14100.00
SC-3                        1.25       14100.00
SC-3                        1.50       14100.00
SC-3                        1.75       14100.00
SC-3                        2.00       14100.00
SC-3                        2.25       14100.00
SC-3                        2.50       14100.00
SC-3                        2.75       14100.00
SC-3                        3.00       14100.00
SC-3                        3.09       14100.00
SC-3                        3.25       14100.00
SC-3                        3.50       14100.00
SC-3                        3.75       14100.00
SC-3                        4.00       14100.00
SC-3                        4.25       14100.00
SC-3                        4.50       14100.00
SC-3                        4.75       14100.00
SC-3                        5.00       14100.00
SC-3                        5.25       14100.00
SC-3                        5.50       14100.00
SC-3                        5.75       14100.00
SC-3                        6.00       14100.00
SC-3                        6.25       14100.00
SC-3                        6.50       14100.00
SC-3                        6.75       14100.00
SC-3                        7.00       14100.00
SC-3                        7.25       14100.00
SC-3                        7.50       14100.00
SC-3                        7.75       14100.00
SC-3                        8.00       14100.00
SC-3                        8.25       14100.00
SC-3                        8.50       14100.00
SC-3                        8.75       14100.00
SC-3                        9.00       14100.00
SC-3                        9.25       14100.00
SC-3                        9.50       14100.00
SC-3                        9.75       14100.00
SC-3                        10.00      14100.00
SC-3                        10.25      100.00
SC-3                        10.40      100.00
SC-3                        10.75      100.00
;
SC-14            Storage    0.00       0.00
SC-14                       0.25       6200.00
SC-14                       0.50       6200.00
SC-14                       0.75       6200.00
SC-14                       1.00       6200.00
SC-14                       1.25       3100.00
SC-14                       1.50       3100.00
SC-14                       1.75       3100.00
SC-14                       2.00       3100.00
SC-14                       2.25       3100.00
SC-14                       2.50       3100.00
SC-14                       2.75       3100.00
SC-14                       3.00       3100.00
SC-14                       3.09       15536.16
SC-14                       3.25       15843.82
```

```
SC-14                       3.50       16230.12
SC-14                       3.75       16620.92
SC-14                       4.00       17016.22
SC-14                       4.25       17416.02
SC-14                       4.50       17820.32
SC-14                       4.75       18229.12
SC-14                       5.00       18642.42
SC-14                       5.25       19060.22
SC-14                       5.50       19482.52
SC-14                       5.75       19909.32
SC-14                       6.00       20340.62
SC-14                       6.25       20776.42
SC-14                       6.50       21216.72
SC-14                       6.75       21661.52
SC-14                       7.00       22110.82
SC-14                       7.25       22564.62
SC-14                       7.50       23022.92
SC-14                       7.75       23485.72
SC-14                       8.00       23953.02
SC-14                       8.25       24424.82
SC-14                       8.50       24901.12
SC-14                       8.75       25381.92
SC-14                       9.00       25867.22
SC-14                       9.25       26357.02
SC-14                       9.50       26851.32
SC-14                       9.75       27350.11
SC-14                       10.00      27853.41
SC-14                       10.25      28361.21
SC-14                       10.40      28668.05
SC-14                       10.75      29390.31

[TIMESERIES]
;;Name           Date       Time       Value
;;-------------- ---------- ---------- ----------
TS-Lindbergh     FILE "\\cp.rickeng.com\projects\C_SD_J\15013 - South
Otay\WaterResources\Hydromodification\SWMM\RainGauge\lindbergh.dat"

[REPORT]
;;Reporting Options
INPUT      NO
CONTROLS   NO
SUBCATCHMENTS ALL
NODES ALL
LINKS ALL

[TAGS]

[MAP]
DIMENSIONS -1470.588 0.000 11470.588 10000.000
Units      None

[COORDINATES]
;;Node           X-Coord            Y-Coord
;;-------------- ------------------ ------------------
POC1             7637.451           5943.455
POC2             7649.830           4513.719
J1               6002.045           5408.998
J3               6437.344           3831.389
POC_MC           -460.123           4110.429
BMP-1            8050.510           5890.548
BMP-2            7860.726           4479.819
BMP-3            6718.857           3638.442
BMP-14           209.258            3701.703

[VERTICES]
;;Link           X-Coord            Y-Coord
;;-------------- ------------------ ------------------
4                6656.442           4979.550
5                5040.900           5102.249
5                4335.378           5040.900
5                3558.282           4795.501
5                2505.112           4846.626
5                2157.464           4877.301
5                1175.869           4233.129
5                214.724            4263.804
8                5894.858           4032.907
8                2686.428           4127.427
8                1027.076           3623.320
```

```
[Polygons]
;;Subcatchment   X-Coord            Y-Coord           
;;-------------- ------------------ ------------------
DMA-1            8053.748           5282.323          
DMA-1            8206.182           4938.368          
DMA-1            8397.702           5079.077          
DMA-1            8389.885           5501.203          
DMA-1            8694.754           5520.746          
DMA-1            8718.206           5790.438          
DMA-1            8843.280           5954.598          
DMA-1            8890.183           6017.135          
DMA-1            9036.241           6122.946          
DMA-1            8912.454           6153.893          
DMA-1            8175.923           6129.135          
DMA-1            7705.534           5516.391          
DMA-1            7686.966           5293.575          
DMA-2            7965.486           3987.626          
DMA-2            7971.668           4113.659          
DMA-2            8018.571           4160.562          
DMA-2            8126.409           4278.524          
DMA-2            7946.918           4284.714          
DMA-2            7977.865           4656.074          
DMA-2            7804.563           4965.540          
DMA-2            7701.976           5262.780          
DMA-2            8045.931           5243.237          
DMA-2            8198.365           4887.557          
DMA-2            8444.605           5075.168          
DMA-2            8425.062           5462.117          
DMA-2            8729.931           5493.386          
DMA-2            8745.566           5759.169          
DMA-2            8937.086           6024.952          
DMA-2            9128.606           6169.569          
DMA-2            9367.029           6212.564          
DMA-2            9632.812           6204.747          
DMA-2            9624.995           6079.672          
DMA-2            9406.115           6079.672          
DMA-2            9394.389           4989.180          
DMA-2            9980.675           4973.545          
DMA-2            9679.932           4377.554          
DMA-2            9679.932           3956.679          
DMA-2            9568.524           3956.679          
DMA-2            9531.388           3863.839          
DMA-2            7656.019           3863.839          
DMA-2            7649.830           3993.815          
DMA-3            6070.975           3796.237          
DMA-3            6780.866           3778.490          
DMA-3            7490.758           3760.742          
DMA-3            7470.475           3020.427          
DMA-3            6851.855           3015.356          
DMA-3            6507.051           2929.155          
DMA-3            6218.024           2721.258          
DMA-3            6334.649           2629.986          
DMA-3            6643.958           2853.095          
DMA-3            6872.138           2868.307          
DMA-3            6897.491           2751.682          
DMA-3            6998.904           2858.166          
DMA-3            7460.334           2842.954          
DMA-3            7485.687           2269.970          
DMA-3            7394.415           2254.758          
DMA-3            7384.274           2143.204          
DMA-3            7490.758           2138.133          
DMA-3            7495.828           1884.600          
DMA-3            7482.430           1677.812          
DMA-3            7604.352           1650.718          
DMA-3            7365.024           1135.936          
DMA-3            6999.258           670.827           
DMA-3            5929.053           1573.952          
DMA-3            5644.569           2025.515          
DMA-3            5531.678           2377.735          
DMA-3            5251.709           3032.501          
DMA-3            5229.246           3456.503          
DMA-3            5264.740           3892.579          
DMA-14           -396.171           3918.380          
DMA-14           -350.159           4025.742          
DMA-14           -304.146           4133.104          
DMA-14           564.974            3775.231          
DMA-14           1229.596           3724.106          
```

```
DMA-14           1945.342           3969.505
DMA-14           2078.267           4153.554
DMA-14           2906.488           4266.028
DMA-14           3980.107           4245.578
DMA-14           4164.156           4163.779
DMA-14           4368.655           4286.478
DMA-14           4869.678           4204.679
DMA-14           5288.901           4368.278
DMA-14           6413.645           3979.730
DMA-14           7630.414           3989.955
DMA-14           7661.089           1709.791
DMA-14           7507.715           1699.566
DMA-14           7497.490           3765.006
DMA-14           6250.046           3795.681
DMA-14           5207.101           3897.930
DMA-14           4307.962           3932.539
DMA-14           3647.487           3932.539
DMA-14           3255.330           3984.139
DMA-14           2780.614           3984.139
DMA-14           2409.097           3932.539
DMA-14           2078.860           3736.461
DMA-14           1583.504           3550.702
DMA-14           1211.987           3478.463
DMA-14           737.270            3509.422
DMA-14           200.635            3499.102
DMA-14           -191.522           3757.100
DMA-14SM         519.124            3155.728

[SYMBOLS]
;;Gage           X-Coord            Y-Coord
;;-------------- ------------------ ------------------
Lindbergh        1922.290           8394.683


[BACKDROP]
FILE       "\\cp.rickeng.com\projects\C_SD_J\15013 - South Otay\WaterResources\Hydromodification\SWMM\MoodyCanyon\BG_image.jpg"
DIMENSIONS -1470.588 0.000 11470.588 10000.000
```

```
EPA STORM WATER MANAGEMENT MODEL - VERSION 5.1 (Build 5.1.012)
--------------------------------------------------------------

J-15013C SOUTH OTAY VTM 2
MOODY CANYON - POST DEVELOPMENT
MODEL

WARNING 04: minimum elevation drop used for Conduit 4
WARNING 04: minimum elevation drop used for Conduit 5
WARNING 04: minimum elevation drop used for Conduit 7
WARNING 04: minimum elevation drop used for Conduit 8

*********************************************************
NOTE: The summary statistics displayed in this report are
based on results found at every computational time step,
not just on results from each reporting time step.
*********************************************************

****************
Analysis Options
****************
Flow Units ............... CFS
Process Models:
  Rainfall/Runoff ........ YES
  RDII ................... NO
  Snowmelt ............... NO
  Groundwater ............ NO
  Flow Routing ........... YES
  Ponding Allowed ........ NO
  Water Quality .......... NO
Infiltration Method ...... GREEN_AMPT
Flow Routing Method ...... KINWAVE
Starting Date ............ 08/28/1951 01:00:00
Ending Date .............. 03/16/2008 20:00:00
Antecedent Dry Days ...... 0.0
Report Time Step ......... 01:00:00
Wet Time Step ............ 01:00:00
Dry Time Step ............ 01:00:00
Routing Time Step ........ 60.00 sec


**************************        Volume         Depth
Runoff Quantity Continuity     acre-feet        inches
**************************     ---------       -------
Total Precipitation ......      4659.155       539.150
Evaporation Loss .........       564.559        65.330
Infiltration Loss ........      1452.521       168.083
Surface Runoff ...........      2893.246       334.802
Final Storage ............         0.000         0.000
Continuity Error (%) .....        -5.391


**************************        Volume        Volume
Flow Routing Continuity        acre-feet      10^6 gal
**************************     ---------     ---------
Dry Weather Inflow .......         0.000         0.000
Wet Weather Inflow .......      2893.246       942.807
Groundwater Inflow .......         0.000         0.000
RDII Inflow ..............         0.000         0.000
External Inflow ..........         0.000         0.000
External Outflow .........      2890.572       941.936
Flooding Loss ............         0.130         0.042
Evaporation Loss .........         0.000         0.000
Exfiltration Loss ........         0.000         0.000
Initial Stored Volume ....         0.000         0.000
Final Stored Volume ......         0.000         0.000
Continuity Error (%) .....         0.088


********************************
Highest Flow Instability Indexes
********************************
All links are stable.


*************************
Routing Time Step Summary
```

```
*************************
Minimum Time Step           :    60.00 sec
Average Time Step           :    60.00 sec
Maximum Time Step           :    60.00 sec
Percent in Steady State     :     0.00
Average Iterations per Step :     1.00
Percent Not Converging      :     0.00


***************************
Subcatchment Runoff Summary
***************************

---------------------------------------------------------------------------------------------------------
                          Total      Total      Total      Total      Total       Total     Peak   Runoff
                         Precip      Runon       Evap      Infil     Runoff      Runoff   Runoff    Coeff
Subcatchment                 in         in         in         in         in    10^6 gal      CFS
---------------------------------------------------------------------------------------------------------
DMA-1                    539.15       0.00      77.40     100.64     395.05       63.29     8.01    0.733
DMA-2                    539.15       0.00      77.41     100.65     395.04      243.50    30.80    0.733
DMA-3                    539.15       0.00      77.41     100.64     395.04      410.84    51.97    0.733
DMA-14                   539.15       0.00      85.70      60.04     426.66      169.14    19.88    0.791
DMA-14SM                 539.15       0.00      15.53     442.37      92.85       55.97    23.40    0.172


******************
Node Depth Summary
******************

---------------------------------------------------------------------------------
                               Average  Maximum  Maximum  Time of Max    Reported
                                 Depth    Depth      HGL   Occurrence   Max Depth
Node                 Type         Feet     Feet     Feet  days hr:min        Feet
---------------------------------------------------------------------------------
POC1                 JUNCTION     0.00     0.00     0.00     0  00:00        0.00
POC2                 JUNCTION     0.00     0.00     0.00     0  00:00        0.00
J1                   JUNCTION     0.00     0.00     0.00     0  00:00        0.00
J3                   JUNCTION     0.00     0.00     0.00     0  00:00        0.00
POC_MC               OUTFALL      0.00     0.00     0.00     0  00:00        0.00
BMP-1                STORAGE      0.04     6.97     6.97  5218  08:03        6.08
BMP-2                STORAGE      0.07     9.19     9.19  5218  08:02        9.19
BMP-3                STORAGE      0.06    15.00    15.00  5218  08:28        9.76
BMP-14               STORAGE      0.05     6.94     6.94  5218  08:35        6.63


*******************
Node Inflow Summary
*******************

-------------------------------------------------------------------------------------------------
                                Maximum  Maximum                  Lateral       Total        Flow
                                Lateral    Total  Time of Max      Inflow      Inflow     Balance
                                 Inflow   Inflow   Occurrence      Volume      Volume       Error
Node                 Type           CFS      CFS  days hr:min    10^6 gal    10^6 gal     Percent
-------------------------------------------------------------------------------------------------
POC1                 JUNCTION      0.00     8.94  5218  08:03           0        63.2       0.000
POC2                 JUNCTION      0.00    50.30  5218  08:02           0         243       0.000
J1                   JUNCTION      0.00    57.63  5218  08:06           0         307       0.000
J3                   JUNCTION      0.00    34.20  5218  08:17           0         410       0.000
POC_MC               OUTFALL      23.40   105.39  5218  08:22          56         942       0.000
BMP-1                STORAGE       8.01     8.01  5218  08:01        63.3        63.3       0.091
BMP-2                STORAGE      30.80    30.80  5218  08:01         243         243       0.016
BMP-3                STORAGE      51.97    51.97  5218  08:01         411         411       0.108
BMP-14               STORAGE      19.88    50.00  5218  08:17         169         580       0.050


*********************
Node Flooding Summary
*********************

Flooding refers to all water that overflows a node, whether it ponds or not.
--------------------------------------------------------------------------
                                                           Total   Maximum
                               Maximum   Time of Max       Flood    Ponded
                       Hours      Rate    Occurrence      Volume    Volume
Node                 Flooded       CFS   days hr:min    10^6 gal  1000 ft3
--------------------------------------------------------------------------
BMP-2                   0.23      5.54   5218  08:02       0.025     0.000
```

```
BMP-3                   0.20      6.72   5218  08:18       0.017     0.000


**********************
Storage Volume Summary
**********************

--------------------------------------------------------------------------------------------------
                       Average     Avg  Evap Exfil       Maximum     Max    Time of Max    Maximum
                        Volume    Pcnt  Pcnt  Pcnt        Volume    Pcnt     Occurrence    Outflow
Storage Unit          1000 ft3    Full  Loss  Loss      1000 ft3    Full    days hr:min        CFS
--------------------------------------------------------------------------------------------------
BMP-1                    0.121       1     0     0        18.751      99    5218  08:03       8.94
BMP-2                    0.478       1     0     0        58.610     100    5218  07:56      50.30
BMP-3                    0.677       0     0     0       137.610     100    5218  08:17      34.20
BMP-14                   0.279       0     0     0        84.892      70    5218  08:34      40.93


***********************
Outfall Loading Summary
***********************

-----------------------------------------------------------
                       Flow       Avg       Max       Total
                       Freq      Flow      Flow      Volume
Outfall Node           Pcnt       CFS       CFS    10^6 gal
-----------------------------------------------------------
POC_MC                 4.75      1.48    105.39     941.866
-----------------------------------------------------------
System                 4.75      1.48    105.39     941.866


********************
Link Flow Summary
********************

-----------------------------------------------------------------------------
                               Maximum  Time of Max   Maximum    Max/    Max/
                                |Flow|   Occurrence   |Veloc|    Full    Full
Link                 Type          CFS  days hr:min    ft/sec    Flow   Depth
-----------------------------------------------------------------------------
4                    DUMMY       50.30  5218  08:02
5                    DUMMY       57.63  5218  08:06
7                    DUMMY        8.94  5218  08:03
8                    DUMMY       34.20  5218  08:17
O-1                  DUMMY        8.94  5218  08:03
O-2                  DUMMY       50.30  5218  08:02
O-3                  DUMMY       34.20  5218  08:17
O-14                 DUMMY       40.93  5218  08:35


*************************
Conduit Surcharge Summary
*************************

No conduits were surcharged.


Analysis begun on:  Tue Mar 01 17:11:15 2022
Analysis ended on:  Tue Mar 01 17:12:26 2022
Total elapsed time: 00:01:11
```

5. PRE DEVELOPMENT TO POST PROJECT FLOW COMPARISONS

```
[TITLE]
;;Project Title/Notes
J-15013C SOUTH OTAY VTM 2
MOODY CANYON - POST DEVELOPMENT
MODEL

[OPTIONS]
;;Option             Value
FLOW_UNITS           CFS
INFILTRATION         GREEN_AMPT
FLOW_ROUTING         KINWAVE
LINK_OFFSETS         DEPTH
MIN_SLOPE            0
ALLOW_PONDING        NO
SKIP_STEADY_STATE    NO

START_DATE           08/28/1951
START_TIME           01:00:00
REPORT_START_DATE    08/28/1951
REPORT_START_TIME    01:00:00
END_DATE             03/16/2008
END_TIME             20:00:00
SWEEP_START          01/01
SWEEP_END            12/31
DRY_DAYS             0
REPORT_STEP          01:00:00
WET_STEP             01:00:00
DRY_STEP             01:00:00
ROUTING_STEP         0:01:00

INERTIAL_DAMPING     PARTIAL
NORMAL_FLOW_LIMITED  BOTH
FORCE_MAIN_EQUATION  H-W
VARIABLE_STEP        0.75
LENGTHENING_STEP     0
MIN_SURFAREA         12.557
MAX_TRIALS           8
HEAD_TOLERANCE       0.005
SYS_FLOW_TOL         5
LAT_FLOW_TOL         5
MINIMUM_STEP         0.5
THREADS              4

[EVAPORATION]
;;Data Source    Parameters
;;-------------- ----------------
MONTHLY          0.06   0.08   0.11   0.16   0.18   0.21   0.21   0.20   0.16   0.12   0.08   0.06
DRY_ONLY         NO

[RAINGAGES]
;;Name           Format    Interval SCF      Source
;;-------------- --------- ------ ------ ----------
Lindbergh        INTENSITY 1:00     1.0      TIMESERIES TS-Lindbergh

[SUBCATCHMENTS]
;;Name           Rain Gage        Outlet           Area     %Imperv  Width    %Slope   CurbLen  SnowPack
;;-------------- ---------------- ---------------- -------- -------- -------- -------- -------- ----------------
DMA-1            Lindbergh        BMP-1            5.9      75       2578     2        0
DMA-2            Lindbergh        BMP-2            22.7     75       9874     2        0
DMA-3            Lindbergh        BMP-3            38.3     75       16669    2        0
DMA-14           Lindbergh        BMP-14           14.6     85       6377     2        0
DMA-14SM         Lindbergh        POC_MC           22.2     0        1209     2        0

[SUBAREAS]
;;Subcatchment   N-Imperv   N-Perv     S-Imperv   S-Perv     PctZero    RouteTo    PctRouted
;;-------------- ---------- ---------- ---------- ---------- ---------- ---------- ----------
DMA-1            0.012      0.1        0.05       0.1        25         OUTLET
DMA-2            0.012      0.1        0.05       0.1        25         OUTLET
DMA-3            0.012      0.1        0.05       0.1        25         OUTLET
DMA-14           0.012      0.1        0.05       0.1        25         OUTLET
DMA-14SM         0.012      0.1        0.05       0.1        25         OUTLET

[INFILTRATION]
;;Subcatchment   Suction    Ksat       IMD
;;-------------- ---------- ---------- ----------
DMA-1            9.0        0.019      0.3
DMA-2            9.0        0.019      0.3
DMA-3            9.0        0.019      0.3
```

```
DMA-14           9.0        0.019      0.3
DMA-14SM         9.0        0.025      0.3

[JUNCTIONS]
;;Name           Elevation  MaxDepth   InitDepth  SurDepth   Aponded
;;-------------- ---------- ---------- ---------- ---------- ----------
POC1             0          0          0          0          0
POC2             0          0          0          0          0
J1               0          0          0          0          0
J3               0          0          0          0          0

[OUTFALLS]
;;Name           Elevation  Type       Stage Data       Gated    Route To
;;-------------- ---------- ---------- ---------------- -------- ----------------
POC_MC           0          FREE                        NO

[STORAGE]
;;Name           Elev.    MaxDepth   InitDepth  Shape      Curve Name/Params            N/A      Fevap    Psi      Ksat     IMD

;;-------------- -------- ---------- ----------- ---------- ---------------------------- -------- --------          --------
--------
BMP-1            0        10         0          TABULAR    SC-1                         0        0
BMP-2            0        10         0          TABULAR    SC-2                         0        0
BMP-3            0        15         0          TABULAR    SC-3                         0        0
BMP-14           0        8.5        0          TABULAR    SC-14                        0        0

[CONDUITS]
;;Name           From Node        To Node          Length     Roughness  InOffset   OutOffset  InitFlow   MaxFlow
;;-------------- ---------------- ---------------- ---------- ---------- ---------- ---------- ---------- ----------
4                POC2             J1               400        0.01       0          0          0          0
5                J1               POC_MC           400        0.01       0          0          0          0
7                POC1             J1               400        0.01       0          0          0          0
8                J3               BMP-14           400        0.01       0          0          0          0

[OUTLETS]
;;Name           From Node        To Node          Offset     Type            QTable/Qcoeff    Qexpon     Gated
;;-------------- ---------------- ---------------- ---------- --------------- ---------------- ---------- --------
O-1              BMP-1            POC1             0          TABULAR/DEPTH   RC-1                        NO
O-2              BMP-2            POC2             0          TABULAR/DEPTH   RC-2                        NO
O-3              BMP-3            J3               0          TABULAR/DEPTH   RC-3                        NO
O-14             BMP-14           POC_MC           0          TABULAR/DEPTH   RC-14                       NO

[XSECTIONS]
;;Link           Shape        Geom1            Geom2      Geom3      Geom4      Barrels    Culvert
;;-------------- ------------ ---------------- ---------- ---------- ---------- ---------- ----------
4                DUMMY        0                0          0          0          1
5                DUMMY        0                0          0          0          1
7                DUMMY        0                0          0          0          1
8                DUMMY        0                0          0          0          1

[CURVES]
;;Name           Type       X-Value    Y-Value
;;-------------- ---------- ---------- ----------
RC-1             Rating     0.00       0.077
RC-1                        0.25       0.087
RC-1                        0.50       0.096
RC-1                        0.75       0.104
RC-1                        1.00       0.112
RC-1                        1.25       0.119
RC-1                        1.50       0.125
RC-1                        1.75       0.132
RC-1                        2.00       0.138
RC-1                        2.25       0.143
RC-1                        2.50       0.149
RC-1                        2.75       0.154
RC-1                        3.00       0.159
RC-1                        3.09       0.160
RC-1                        3.25       0.164
RC-1                        3.50       0.169
RC-1                        3.75       0.321
RC-1                        4.00       0.595
RC-1                        4.25       0.852
RC-1                        4.50       1.006
RC-1                        4.75       1.137
RC-1                        5.00       1.253
RC-1                        5.25       1.358
RC-1                        5.50       1.455
RC-1                        5.75       1.651
```

```
RC-1                        6.00       2.523
RC-1                        6.25       3.792
RC-1                        6.50       5.350
RC-1                        6.75       7.149
RC-1                        7.00       9.159
RC-1                        7.25       11.358
RC-1                        7.50       13.730
RC-1                        7.75       16.264
RC-1                        8.00       18.949
RC-1                        8.25       21.263
RC-1                        8.50       22.770
RC-1                        8.75       24.180
RC-1                        9.00       25.510
RC-1                        9.25       26.771
RC-1                        9.50       27.974
RC-1                        9.75       29.126
RC-1                        10.00      30.233
RC-1                        10.25      31.300
RC-1                        10.40      31.923
RC-1                        10.75      33.331
;
RC-2             Rating     0.00       0.239
RC-2                        0.25       0.271
RC-2                        0.50       0.300
RC-2                        0.75       0.326
RC-2                        1.00       0.351
RC-2                        1.25       0.373
RC-2                        1.50       0.395
RC-2                        1.75       0.415
RC-2                        2.00       0.434
RC-2                        2.25       0.453
RC-2                        2.50       0.471
RC-2                        2.75       0.488
RC-2                        3.00       0.505
RC-2                        3.09       0.508
RC-2                        3.25       0.521
RC-2                        3.50       0.536
RC-2                        3.75       0.551
RC-2                        4.00       0.566
RC-2                        4.25       0.580
RC-2                        4.50       0.594
RC-2                        4.75       0.608
RC-2                        5.00       0.621
RC-2                        5.25       0.759
RC-2                        5.50       1.333
RC-2                        5.75       1.745
RC-2                        6.00       2.045
RC-2                        6.25       2.735
RC-2                        6.50       3.761
RC-2                        6.75       5.004
RC-2                        7.00       6.424
RC-2                        7.25       7.997
RC-2                        7.50       9.709
RC-2                        7.75       13.423
RC-2                        8.00       18.325
RC-2                        8.25       23.809
RC-2                        8.50       30.032
RC-2                        8.75       36.899
RC-2                        9.00       44.344
RC-2                        9.25       52.321
RC-2                        9.50       60.793
RC-2                        9.75       69.731
RC-2                        10.00      79.108
RC-2                        10.25      88.906
RC-2                        10.40      94.978
RC-2                        10.75      109.689
;
RC-3             Rating     0.00       0.478
RC-3                        0.25       0.543
RC-3                        0.50       0.600
RC-3                        0.75       0.653
RC-3                        1.00       0.701
RC-3                        1.25       0.747
RC-3                        1.50       0.790
RC-3                        1.75       0.830
RC-3                        2.00       0.869
RC-3                        2.25       0.906
RC-3                        2.50       0.942
```

```
RC-3                        2.75       0.976
RC-3                        3.00       1.009
RC-3                        3.09       1.016
RC-3                        3.25       1.041
RC-3                        3.50       1.072
RC-3                        3.75       1.102
RC-3                        4.00       1.132
RC-3                        4.25       1.161
RC-3                        4.50       1.189
RC-3                        4.75       1.216
RC-3                        5.00       1.243
RC-3                        5.25       1.550
RC-3                        5.50       2.090
RC-3                        5.75       2.781
RC-3                        6.00       3.594
RC-3                        6.25       4.513
RC-3                        6.50       5.526
RC-3                        6.75       6.204
RC-3                        7.00       6.732
RC-3                        7.25       7.216
RC-3                        7.50       7.665
RC-3                        7.75       8.086
RC-3                        8.00       8.484
RC-3                        8.25       9.613
RC-3                        8.50       11.345
RC-3                        8.75       13.468
RC-3                        9.00       15.904
RC-3                        9.25       18.566
RC-3                        9.50       20.168
RC-3                        9.75       21.606
RC-3                        10.00      22.927
RC-3                        10.25      25.657
RC-3                        10.40      27.895
RC-3                        10.75      34.205
;
RC-14            Rating     0.00       0.215
RC-14                       0.25       0.567
RC-14                       0.50       0.757
RC-14                       0.75       0.909
RC-14                       1.00       1.039
RC-14                       1.25       1.154
RC-14                       1.50       1.259
RC-14                       1.75       1.355
RC-14                       2.00       1.446
RC-14                       2.25       1.531
RC-14                       2.50       1.611
RC-14                       2.75       1.688
RC-14                       3.00       1.761
RC-14                       3.09       1.775
RC-14                       3.25       1.831
RC-14                       3.50       1.899
RC-14                       3.75       1.964
RC-14                       4.00       2.028
RC-14                       4.25       2.276
RC-14                       4.50       3.094
RC-14                       4.75       3.544
RC-14                       5.00       3.901
RC-14                       5.25       4.209
RC-14                       5.50       4.486
RC-14                       5.75       8.209
RC-14                       6.00       14.789
RC-14                       6.25       23.225
RC-14                       6.50       28.795
RC-14                       6.75       34.757
RC-14                       7.00       42.931
RC-14                       7.25       52.515
RC-14                       7.50       63.243
RC-14                       7.75       74.963
RC-14                       8.00       87.579
RC-14                       8.25       101.018
RC-14                       8.50       111.940
RC-14                       8.75       119.916
RC-14                       9.00       127.329
RC-14                       9.25       134.290
RC-14                       9.50       140.877
RC-14                       9.75       147.147
RC-14                       10.00      153.143
RC-14                       10.25      177.650
```

```
RC-14                       10.40      200.198
RC-14                       10.75      267.228
;
SC-1             Storage    0.00       0.00
SC-1                        0.25       2115.00
SC-1                        0.50       3290.00
SC-1                        0.75       3290.00
SC-1                        1.00       3290.00
SC-1                        1.25       3290.00
SC-1                        1.50       3290.00
SC-1                        1.75       3290.00
SC-1                        2.00       3290.00
SC-1                        2.25       3290.00
SC-1                        2.50       3290.00
SC-1                        2.75       3290.00
SC-1                        3.00       3290.00
SC-1                        3.09       3290.00
SC-1                        3.25       3290.00
SC-1                        3.50       3290.00
SC-1                        3.75       3290.00
SC-1                        4.00       3290.00
SC-1                        4.25       3290.00
SC-1                        4.50       3290.00
SC-1                        4.75       3290.00
SC-1                        5.00       3290.00
SC-1                        5.25       3290.00
SC-1                        5.50       3290.00
SC-1                        5.75       3290.00
SC-1                        6.00       100.00
SC-1                        6.25       100.00
SC-1                        6.50       100.00
SC-1                        6.75       100.00
SC-1                        7.00       100.00
SC-1                        7.25       100.00
SC-1                        7.50       100.00
SC-1                        7.75       100.00
SC-1                        8.00       100.00
SC-1                        8.25       100.00
SC-1                        8.50       100.00
SC-1                        8.75       100.00
SC-1                        9.00       100.00
SC-1                        9.25       100.00
SC-1                        9.50       100.00
SC-1                        9.75       100.00
SC-1                        10.00      100.00
SC-1                        10.25      100.00
SC-1                        10.40      100.00
SC-1                        10.75      100.00
;
SC-2             Storage    0.00       0.00
SC-2                        0.25       2856.30
SC-2                        0.50       6029.96
SC-2                        0.75       8315.00
SC-2                        1.00       8315.00
SC-2                        1.25       8315.00
SC-2                        1.50       8315.00
SC-2                        1.75       8315.00
SC-2                        2.00       8315.00
SC-2                        2.25       8315.00
SC-2                        2.50       8315.00
SC-2                        2.75       8315.00
SC-2                        3.00       8315.00
SC-2                        3.09       8315.00
SC-2                        3.25       8315.00
SC-2                        3.50       8315.00
SC-2                        3.75       8315.00
SC-2                        4.00       8315.00
SC-2                        4.25       8315.00
SC-2                        4.50       8315.00
SC-2                        4.75       8315.00
SC-2                        5.00       8315.00
SC-2                        5.25       8315.00
SC-2                        5.50       8315.00
SC-2                        5.75       8315.00
SC-2                        6.00       8315.00
SC-2                        6.25       8315.00
SC-2                        6.50       8315.00
SC-2                        6.75       8315.00
```

```
SC-2                        7.00       8315.00
SC-2                        7.25       8315.00
SC-2                        7.50       100.00
SC-2                        7.75       100.00
SC-2                        8.00       100.00
SC-2                        8.25       100.00
SC-2                        8.50       100.00
SC-2                        8.75       100.00
SC-2                        9.00       100.00
SC-2                        9.25       100.00
SC-2                        9.50       100.00
SC-2                        9.75       100.00
SC-2                        10.00      100.00
SC-2                        10.25      100.00
SC-2                        10.40      100.00
SC-2                        10.75      100.00
;
SC-3             Storage    0.00       0.00
SC-3                        0.25       4230.00
SC-3                        0.50       8930.00
SC-3                        0.75       13630.00
SC-3                        1.00       14100.00
SC-3                        1.25       14100.00
SC-3                        1.50       14100.00
SC-3                        1.75       14100.00
SC-3                        2.00       14100.00
SC-3                        2.25       14100.00
SC-3                        2.50       14100.00
SC-3                        2.75       14100.00
SC-3                        3.00       14100.00
SC-3                        3.09       14100.00
SC-3                        3.25       14100.00
SC-3                        3.50       14100.00
SC-3                        3.75       14100.00
SC-3                        4.00       14100.00
SC-3                        4.25       14100.00
SC-3                        4.50       14100.00
SC-3                        4.75       14100.00
SC-3                        5.00       14100.00
SC-3                        5.25       14100.00
SC-3                        5.50       14100.00
SC-3                        5.75       14100.00
SC-3                        6.00       14100.00
SC-3                        6.25       14100.00
SC-3                        6.50       14100.00
SC-3                        6.75       14100.00
SC-3                        7.00       14100.00
SC-3                        7.25       14100.00
SC-3                        7.50       14100.00
SC-3                        7.75       14100.00
SC-3                        8.00       14100.00
SC-3                        8.25       14100.00
SC-3                        8.50       14100.00
SC-3                        8.75       14100.00
SC-3                        9.00       14100.00
SC-3                        9.25       14100.00
SC-3                        9.50       14100.00
SC-3                        9.75       14100.00
SC-3                        10.00      14100.00
SC-3                        10.25      100.00
SC-3                        10.40      100.00
SC-3                        10.75      100.00
;
SC-14            Storage    0.00       0.00
SC-14                       0.25       6200.00
SC-14                       0.50       6200.00
SC-14                       0.75       6200.00
SC-14                       1.00       6200.00
SC-14                       1.25       3100.00
SC-14                       1.50       3100.00
SC-14                       1.75       3100.00
SC-14                       2.00       3100.00
SC-14                       2.25       3100.00
SC-14                       2.50       3100.00
SC-14                       2.75       3100.00
SC-14                       3.00       3100.00
SC-14                       3.09       15536.16
SC-14                       3.25       15843.82
```

```
SC-14                       3.50       16230.12
SC-14                       3.75       16620.92
SC-14                       4.00       17016.22
SC-14                       4.25       17416.02
SC-14                       4.50       17820.32
SC-14                       4.75       18229.12
SC-14                       5.00       18642.42
SC-14                       5.25       19060.22
SC-14                       5.50       19482.52
SC-14                       5.75       19909.32
SC-14                       6.00       20340.62
SC-14                       6.25       20776.42
SC-14                       6.50       21216.72
SC-14                       6.75       21661.52
SC-14                       7.00       22110.82
SC-14                       7.25       22564.62
SC-14                       7.50       23022.92
SC-14                       7.75       23485.72
SC-14                       8.00       23953.02
SC-14                       8.25       24424.82
SC-14                       8.50       24901.12
SC-14                       8.75       25381.92
SC-14                       9.00       25867.22
SC-14                       9.25       26357.02
SC-14                       9.50       26851.32
SC-14                       9.75       27350.11
SC-14                       10.00      27853.41
SC-14                       10.25      28361.21
SC-14                       10.40      28668.05
SC-14                       10.75      29390.31

[TIMESERIES]
;;Name           Date       Time       Value     
;;-------------- ---------- ---------- ----------
TS-Lindbergh     FILE "\\cp.rickeng.com\projects\C_SD_J\15013 - South
Otay\WaterResources\Hydromodification\SWMM\RainGauge\lindbergh.dat"

[REPORT]
;;Reporting Options
INPUT      NO
CONTROLS   NO
SUBCATCHMENTS ALL
NODES ALL
LINKS ALL

[TAGS]

[MAP]
DIMENSIONS -1470.588 0.000 11470.588 10000.000
Units      None

[COORDINATES]
;;Node           X-Coord            Y-Coord           
;;-------------- ------------------ ------------------
POC1             7637.451           5943.455          
POC2             7649.830           4513.719          
J1               6002.045           5408.998          
J3               6437.344           3831.389          
POC_MC           -460.123           4110.429          
BMP-1            8050.510           5890.548          
BMP-2            7860.726           4479.819          
BMP-3            6718.857           3638.442          
BMP-14           209.258            3701.703          

[VERTICES]
;;Link           X-Coord            Y-Coord           
;;-------------- ------------------ ------------------
4                6656.442           4979.550          
5                5040.900           5102.249          
5                4335.378           5040.900          
5                3558.282           4795.501          
5                2505.112           4846.626          
5                2157.464           4877.301          
5                1175.869           4233.129          
5                214.724            4263.804          
8                5894.858           4032.907          
8                2686.428           4127.427          
8                1027.076           3623.320          
```

```
[Polygons]
;;Subcatchment   X-Coord            Y-Coord
;;-------------- ------------------ ------------------
DMA-1            8053.748           5282.323
DMA-1            8206.182           4938.368
DMA-1            8397.702           5079.077
DMA-1            8389.885           5501.203
DMA-1            8694.754           5520.746
DMA-1            8718.206           5790.438
DMA-1            8843.280           5954.598
DMA-1            8890.183           6017.135
DMA-1            9036.241           6122.946
DMA-1            8912.454           6153.893
DMA-1            8175.923           6129.135
DMA-1            7705.534           5516.391
DMA-1            7686.966           5293.575
DMA-2            7965.486           3987.626
DMA-2            7971.668           4113.659
DMA-2            8018.571           4160.562
DMA-2            8126.409           4278.524
DMA-2            7946.918           4284.714
DMA-2            7977.865           4656.074
DMA-2            7804.563           4965.540
DMA-2            7701.976           5262.780
DMA-2            8045.931           5243.237
DMA-2            8198.365           4887.557
DMA-2            8444.605           5075.168
DMA-2            8425.062           5462.117
DMA-2            8729.931           5493.386
DMA-2            8745.566           5759.169
DMA-2            8937.086           6024.952
DMA-2            9128.606           6169.569
DMA-2            9367.029           6212.564
DMA-2            9632.812           6204.747
DMA-2            9624.995           6079.672
DMA-2            9406.115           6079.672
DMA-2            9394.389           4989.180
DMA-2            9980.675           4973.545
DMA-2            9679.932           4377.554
DMA-2            9679.932           3956.679
DMA-2            9568.524           3956.679
DMA-2            9531.388           3863.839
DMA-2            7656.019           3863.839
DMA-2            7649.830           3993.815
DMA-3            6070.975           3796.237
DMA-3            6780.866           3778.490
DMA-3            7490.758           3760.742
DMA-3            7470.475           3020.427
DMA-3            6851.855           3015.356
DMA-3            6507.051           2929.155
DMA-3            6218.024           2721.258
DMA-3            6334.649           2629.986
DMA-3            6643.958           2853.095
DMA-3            6872.138           2868.307
DMA-3            6897.491           2751.682
DMA-3            6998.904           2858.166
DMA-3            7460.334           2842.954
DMA-3            7485.687           2269.970
DMA-3            7394.415           2254.758
DMA-3            7384.274           2143.204
DMA-3            7490.758           2138.133
DMA-3            7495.828           1884.600
DMA-3            7482.430           1677.812
DMA-3            7604.352           1650.718
DMA-3            7365.024           1135.936
DMA-3            6999.258           670.827
DMA-3            5929.053           1573.952
DMA-3            5644.569           2025.515
DMA-3            5531.678           2377.735
DMA-3            5251.709           3032.501
DMA-3            5229.246           3456.503
DMA-3            5264.740           3892.579
DMA-14           -396.171           3918.380
DMA-14           -350.159           4025.742
DMA-14           -304.146           4133.104
DMA-14           564.974            3775.231
DMA-14           1229.596           3724.106
```

```
DMA-14           1945.342           3969.505          
DMA-14           2078.267           4153.554          
DMA-14           2906.488           4266.028          
DMA-14           3980.107           4245.578          
DMA-14           4164.156           4163.779          
DMA-14           4368.655           4286.478          
DMA-14           4869.678           4204.679          
DMA-14           5288.901           4368.278          
DMA-14           6413.645           3979.730          
DMA-14           7630.414           3989.955          
DMA-14           7661.089           1709.791          
DMA-14           7507.715           1699.566          
DMA-14           7497.490           3765.006          
DMA-14           6250.046           3795.681          
DMA-14           5207.101           3897.930          
DMA-14           4307.962           3932.539          
DMA-14           3647.487           3932.539          
DMA-14           3255.330           3984.139          
DMA-14           2780.614           3984.139          
DMA-14           2409.097           3932.539          
DMA-14           2078.860           3736.461          
DMA-14           1583.504           3550.702          
DMA-14           1211.987           3478.463          
DMA-14           737.270            3509.422          
DMA-14           200.635            3499.102          
DMA-14           -191.522           3757.100          
DMA-14SM         519.124            3155.728          

[SYMBOLS]
;;Gage           X-Coord            Y-Coord           
;;-------------- ------------------ ------------------
Lindbergh        1922.290           8394.683          


[BACKDROP]
FILE       "\\cp.rickeng.com\projects\C_SD_J\15013 - South Otay\WaterResources\Hydromodification\SWMM\MoodyCanyon\BG_image.jpg"
DIMENSIONS -1470.588 0.000 11470.588 10000.000
```

```
EPA STORM WATER MANAGEMENT MODEL - VERSION 5.1 (Build 5.1.012)
--------------------------------------------------------------

J-15013C SOUTH OTAY VTM 2
MOODY CANYON - POST DEVELOPMENT
MODEL

WARNING 04: minimum elevation drop used for Conduit 4
WARNING 04: minimum elevation drop used for Conduit 5
WARNING 04: minimum elevation drop used for Conduit 7
WARNING 04: minimum elevation drop used for Conduit 8

*********************************************************
NOTE: The summary statistics displayed in this report are
based on results found at every computational time step,
not just on results from each reporting time step.
*********************************************************

****************
Analysis Options
****************
Flow Units ............... CFS
Process Models:
  Rainfall/Runoff ........ YES
  RDII ................... NO
  Snowmelt ............... NO
  Groundwater ............ NO
  Flow Routing ........... YES
  Ponding Allowed ........ NO
  Water Quality .......... NO
Infiltration Method ...... GREEN_AMPT
Flow Routing Method ...... KINWAVE
Starting Date ............ 08/28/1951 01:00:00
Ending Date .............. 03/16/2008 20:00:00
Antecedent Dry Days ...... 0.0
Report Time Step ......... 01:00:00
Wet Time Step ............ 01:00:00
Dry Time Step ............ 01:00:00
Routing Time Step ........ 60.00 sec


**************************        Volume         Depth
Runoff Quantity Continuity     acre-feet        inches
**************************     ---------       -------
Total Precipitation ......      4659.155       539.150
Evaporation Loss .........       564.559        65.330
Infiltration Loss ........      1452.521       168.083
Surface Runoff ...........      2893.246       334.802
Final Storage ............         0.000         0.000
Continuity Error (%) .....        -5.391


**************************        Volume        Volume
Flow Routing Continuity        acre-feet      10^6 gal
**************************     ---------     ---------
Dry Weather Inflow .......         0.000         0.000
Wet Weather Inflow .......      2893.246       942.807
Groundwater Inflow .......         0.000         0.000
RDII Inflow ..............         0.000         0.000
External Inflow ..........         0.000         0.000
External Outflow .........      2890.572       941.936
Flooding Loss ............         0.130         0.042
Evaporation Loss .........         0.000         0.000
Exfiltration Loss ........         0.000         0.000
Initial Stored Volume ....         0.000         0.000
Final Stored Volume ......         0.000         0.000
Continuity Error (%) .....         0.088


********************************
Highest Flow Instability Indexes
********************************
All links are stable.


*************************
Routing Time Step Summary
```

```
*************************
Minimum Time Step           :    60.00 sec
Average Time Step           :    60.00 sec
Maximum Time Step           :    60.00 sec
Percent in Steady State     :     0.00
Average Iterations per Step :     1.00
Percent Not Converging      :     0.00


***************************
Subcatchment Runoff Summary
***************************

--------------------------------------------------------------------------------------------------------
                          Total      Total      Total      Total      Total       Total     Peak  Runoff
                         Precip      Runon       Evap      Infil     Runoff      Runoff   Runoff   Coeff
Subcatchment                 in         in         in         in         in    10^6 gal      CFS
--------------------------------------------------------------------------------------------------------
DMA-1                    539.15       0.00      77.40     100.64     395.05       63.29     8.01   0.733
DMA-2                    539.15       0.00      77.41     100.65     395.04      243.50    30.80   0.733
DMA-3                    539.15       0.00      77.41     100.64     395.04      410.84    51.97   0.733
DMA-14                   539.15       0.00      85.70      60.04     426.66      169.14    19.88   0.791
DMA-14SM                 539.15       0.00      15.53     442.37      92.85       55.97    23.40   0.172


******************
Node Depth Summary
******************

---------------------------------------------------------------------------------
                               Average  Maximum  Maximum  Time of Max    Reported
                                 Depth    Depth      HGL   Occurrence   Max Depth
Node                 Type         Feet     Feet     Feet  days hr:min        Feet
---------------------------------------------------------------------------------
POC1                 JUNCTION     0.00     0.00     0.00     0  00:00        0.00
POC2                 JUNCTION     0.00     0.00     0.00     0  00:00        0.00
J1                   JUNCTION     0.00     0.00     0.00     0  00:00        0.00
J3                   JUNCTION     0.00     0.00     0.00     0  00:00        0.00
POC_MC               OUTFALL      0.00     0.00     0.00     0  00:00        0.00
BMP-1                STORAGE      0.04     6.97     6.97  5218  08:03        6.08
BMP-2                STORAGE      0.07     9.19     9.19  5218  08:02        9.19
BMP-3                STORAGE      0.06    15.00    15.00  5218  08:28        9.76
BMP-14               STORAGE      0.05     6.94     6.94  5218  08:35        6.63


*******************
Node Inflow Summary
*******************

-------------------------------------------------------------------------------------------------
                                Maximum  Maximum                  Lateral       Total        Flow
                                Lateral    Total  Time of Max      Inflow      Inflow     Balance
                                 Inflow   Inflow   Occurrence      Volume      Volume       Error
Node                 Type           CFS      CFS  days hr:min    10^6 gal    10^6 gal     Percent
-------------------------------------------------------------------------------------------------
POC1                 JUNCTION      0.00     8.94  5218  08:03           0        63.2       0.000
POC2                 JUNCTION      0.00    50.30  5218  08:02           0         243       0.000
J1                   JUNCTION      0.00    57.63  5218  08:06           0         307       0.000
J3                   JUNCTION      0.00    34.20  5218  08:17           0         410       0.000
POC_MC               OUTFALL      23.40   105.39  5218  08:22          56         942       0.000
BMP-1                STORAGE       8.01     8.01  5218  08:01        63.3        63.3       0.091
BMP-2                STORAGE      30.80    30.80  5218  08:01         243         243       0.016
BMP-3                STORAGE      51.97    51.97  5218  08:01         411         411       0.108
BMP-14               STORAGE      19.88    50.00  5218  08:17         169         580       0.050


*********************
Node Flooding Summary
*********************

Flooding refers to all water that overflows a node, whether it ponds or not.
--------------------------------------------------------------------------
                                                           Total   Maximum
                               Maximum   Time of Max       Flood    Ponded
                       Hours      Rate    Occurrence      Volume    Volume
Node                 Flooded       CFS   days hr:min    10^6 gal  1000 ft3
--------------------------------------------------------------------------
BMP-2                   0.23      5.54  5218   08:02       0.025     0.000
```

```
BMP-3                   0.20      6.72   5218  08:18       0.017     0.000


**********************
Storage Volume Summary
**********************

--------------------------------------------------------------------------------------------------
                       Average     Avg  Evap Exfil       Maximum     Max    Time of Max    Maximum
                        Volume    Pcnt  Pcnt  Pcnt        Volume    Pcnt     Occurrence    Outflow
Storage Unit          1000 ft3    Full  Loss  Loss      1000 ft3    Full    days hr:min        CFS
--------------------------------------------------------------------------------------------------
BMP-1                    0.121       1     0     0        18.751      99     5218  08:03       8.94
BMP-2                    0.478       1     0     0        58.610     100     5218  07:56      50.30
BMP-3                    0.677       0     0     0       137.610     100     5218  08:17      34.20
BMP-14                   0.279       0     0     0        84.892      70     5218  08:34      40.93


***********************
Outfall Loading Summary
***********************

-----------------------------------------------------------
                       Flow       Avg       Max       Total
                       Freq      Flow      Flow      Volume
Outfall Node           Pcnt       CFS       CFS    10^6 gal
-----------------------------------------------------------
POC_MC                 4.75      1.48    105.39     941.866
-----------------------------------------------------------
System                 4.75      1.48    105.39     941.866


********************
Link Flow Summary
********************

-----------------------------------------------------------------------------
                               Maximum  Time of Max   Maximum    Max/    Max/
                                |Flow|   Occurrence   |Veloc|    Full    Full
Link                 Type          CFS  days hr:min    ft/sec    Flow   Depth
-----------------------------------------------------------------------------
4                    DUMMY       50.30  5218  08:02
5                    DUMMY       57.63  5218  08:06
7                    DUMMY        8.94  5218  08:03
8                    DUMMY       34.20  5218  08:17
O-1                  DUMMY        8.94  5218  08:03
O-2                  DUMMY       50.30  5218  08:02
O-3                  DUMMY       34.20  5218  08:17
O-14                 DUMMY       40.93  5218  08:35


*************************
Conduit Surcharge Summary
*************************

No conduits were surcharged.


Analysis begun on:  Tue Mar 01 17:11:15 2022
Analysis ended on:  Tue Mar 01 17:12:26 2022
Total elapsed time: 00:01:11
```

THIS PAGE INTENTIONALLY LEFT BLANK FOR DOUBLE-SIDED PRINTING

Attachment 3
Structural BMP Maintenance Information

This is the cover sheet for Attachment 3.

A maintenance agreement will be provided during final engineering.

THIS PAGE INTENTIONALLY LEFT BLANK FOR DOUBLE-SIDED PRINTING

Project Name: Southwest Village Vesting Tentative Map (VTM)

Indicate which Items are Included:

Attachment Sequence	Contents	Checklist
Attachment 3	Maintenance Agreement (Form DS-3247) (when applicable)	☐ Included ☐ Not applicable

Maintenance Agreement (Form DS-3247) will be submitted with the Final Engineering submittal.

Project Name:

Use this checklist to ensure the required information has been included in the Structural BMP Maintenance Information Attachment:

Attachment 3: For private entity operation and maintenance, Attachment 3 must include a Storm Water Management and Discharge Control Maintenance Agreement (Form DS-3247). The following information must be included in the exhibits attached to the maintenance agreement:

- ☐ Vicinity map
- ☐ Site design BMPs for which DCV reduction is claimed for meeting the pollutant control obligations.
- ☐ BMP and HMP location and dimensions
- ☐ BMP and HMP specifications/cross section/model
- ☐ Maintenance recommendations and frequency
- ☐ LID features such as (permeable paver and LS location, dim, SF).

THE CITY OF SAN DIEGO

RECORDING REQUESTED BY:
THE CITY OF SAN DIEGO
AND WHEN RECORDED MAIL TO:

Pardee Homes
13400 Sabre Springs Parkway, Suite 200
San Diego, California 92128

(THIS SPACE IS FOR RECORDER'S USE ONLY)

STORM WATER MANAGEMENT AND DISCHARGE CONTROL MAINTENANCE AGREEMENT

APPROVAL NUMBER:	ASSESSOR'S PARCEL NUMBER:	PROJECT NUMBER:
____________________	645-061-04, 645-061-(06,07,08,09)	614791

This agreement is made by and between the City of San Diego, a municipal corporation [City] and

Pardee Homes;

the owner or duly authorized representative of the owner [Property Owner] of property located at

Beyer Blvd & Enright Dr.
(PROPERTY ADDRESS)

and more particularly described as:

____
(LEGAL DESCRIPTION OF PROPERTY)

in the City of San Diego, County of San Diego, State of California.

Property Owner is required pursuant to the City of San Diego Municipal Code, Chapter 4, Article 3, Division 3, Chapter 14, Article 2, Division 2, and the Land Development Manual, Storm Water Standards, to enter into a Storm Water Management and Discharge Control Maintenance Agreement [Maintenance Agreement] for the installation and maintenance of Permanent Storm Water Best Management Practices [Permanent Storm Water BMPs] prior to the issuance of construction/grading permits. The Maintenance Agreement is intended to ensure the establishment and maintenance of Permanent Storm Water BMPs on site, as described in the attached exhibit(s), the project's Storm Water Quality Management Plan [SWQMP] and Grading and/or Improvement Plan Drawing No(s), or Building Plan Project No(s): 614791.

Property Owner wishes to obtain a building/engineering/grading permit according to the Grading and/or Improvement Plan Drawing No(s) or Building Plan Project No(s): 614791.

Continued on Page 2

THIS PAGE INTENTIONALLY LEFT BLANK FOR DOUBLE-SIDED PRINTING

Attachment 4
Copy of Plan Sheets Showing Permanent Storm Water BMPs

This is the cover sheet for Attachment 4.

Project Name: South Otay Mesa Vesting Tentative Map (VTM)

Use this checklist to ensure the required information has been included on the plans:

The plans must identify:

- ☑ Structural BMP(s) with ID numbers matching Form I-6 Summary of PDP Structural BMPs
- ☑ The grading and drainage design shown on the plans must be consistent with the delineation of DMAs shown on the DMA exhibit
- ☑ Details and specifications for construction of structural BMP(s)
- ☐ Signage indicating the location and boundary of structural BMP(s) as required by the City Engineer
- ☑ How to access the structural BMP(s) to inspect and perform maintenance
- ☑ Features that are provided to facilitate inspection (e.g., observation ports, cleanouts, silt posts, or other features that allow the inspector to view necessary components of the structural BMP and compare to maintenance thresholds)
- ☑ Manufacturer and part number for proprietary parts of structural BMP(s) when applicable
- ☐ Maintenance thresholds specific to the structural BMP(s), with a location-specific frame of reference (e.g., level of accumulated materials that triggers removal of the materials, to be identified based on viewing marks on silt posts or measured with a survey rod with respect to a fixed benchmark within the BMP)
- ☐ Recommended equipment to perform maintenance
- ☐ When applicable, necessary special training or certification requirements for inspection and maintenance personnel such as confined space entry or hazardous waste management
- ☐ Include landscaping plan sheets showing vegetation requirements for vegetated structural BMP(s)
- ☑ All BMPs must be fully dimensioned on the plans
- ☐ When proprietary BMPs are used, site specific cross section with outflow, inflow and model number shall be provided. Broucher photocopies are not allowed.

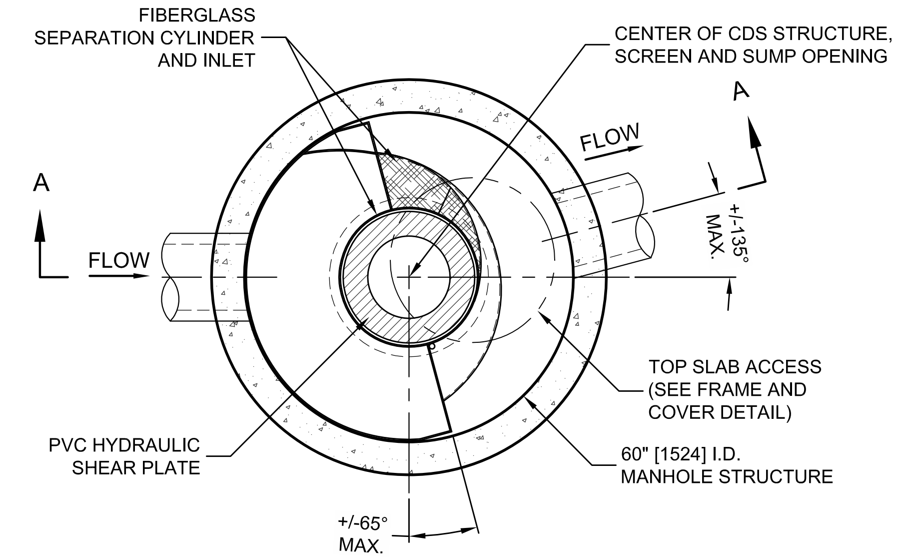

PLAN VIEW B-B

N.T.S.

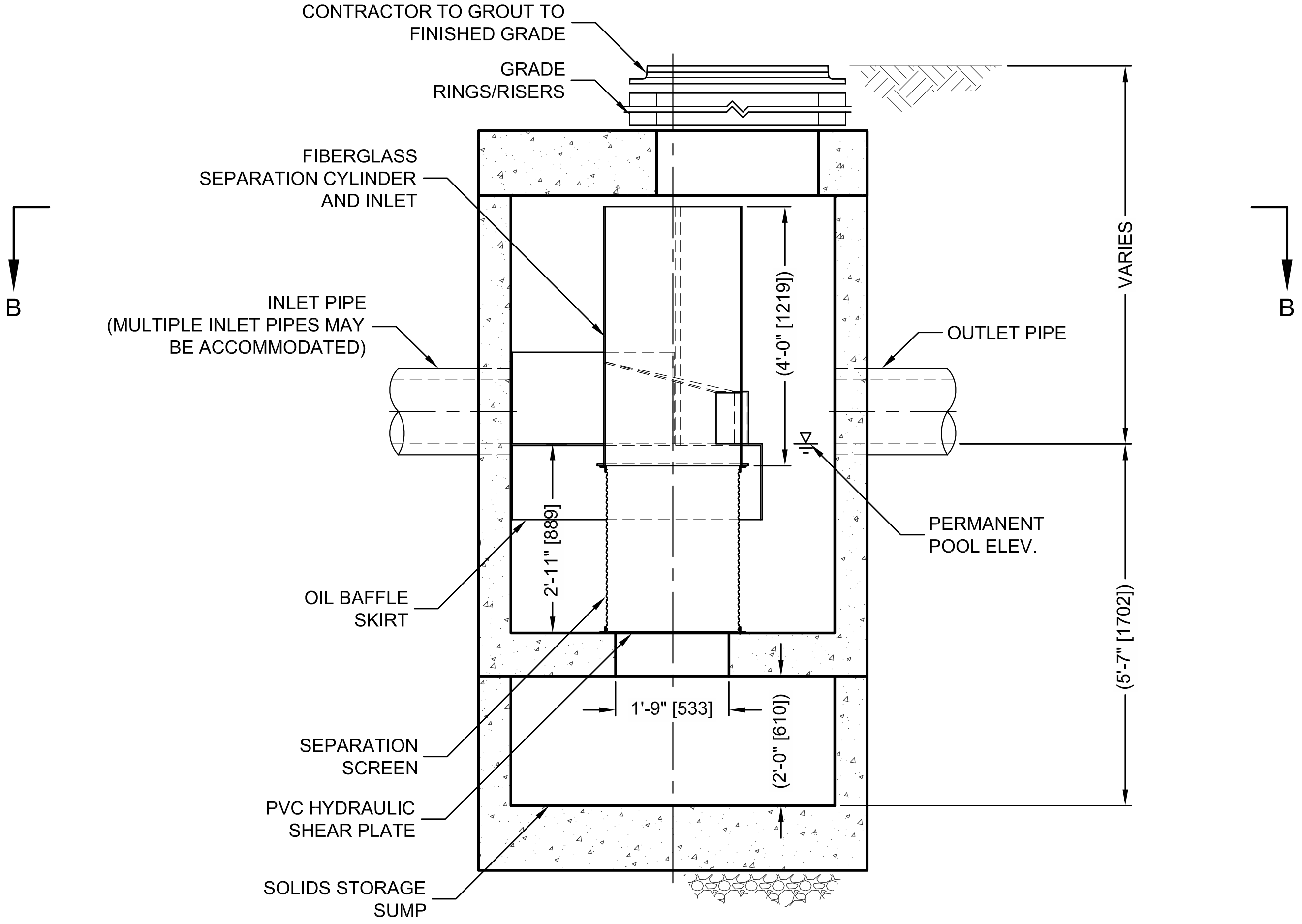

ELEVATION A-A

N.T.S.

CDS2025-5-C DESIGN NOTES

CDS2025-5-C RATED TREATMENT CAPACITY IS 1.6 CFS [45.3 L/s], OR PER LOCAL REGULATIONS. MAXIMUM HYDRAULIC INTERNAL BYPASS CAPACITY IS 14.0 CFS [396 L/s]. IF THE SITE CONDITIONS EXCEED 14.0 CFS [396 L/s], AN UPSTREAM BYPASS STRUCTURE IS REQUIRED.

THE STANDARD CDS2025-5-C CONFIGURATION IS SHOWN. ALTERNATE CONFIGURATIONS ARE AVAILABLE AND ARE LISTED BELOW. SOME CONFIGURATIONS MAY BE COMBINED TO SUIT SITE REQUIREMENTS.

CONFIGURATION DESCRIPTION BMP-1
GRATED INLET ONLY (NO INLET PIPE)
GRATED INLET WITH INLET PIPE OR PIPES
CURB INLET ONLY (NO INLET PIPE)
CURB INLET WITH INLET PIPE OR PIPES
SEPARATE OIL BAFFLE (SINGLE INLET PIPE REQUIRED FOR THIS CONFIGURATION)
SEDIMENT WEIR FOR NJDEP / NJCAT CONFORMING UNITS

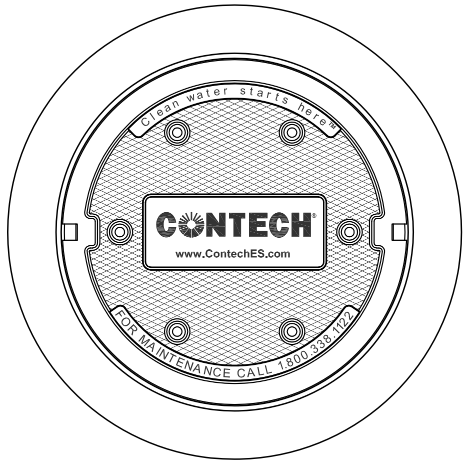

FRAME AND COVER

(DIAMETER VARIES)

N.T.S.

SITE SPECIFIC DATA REQUIREMENTS

STRUCTURE ID			
WATER QUALITY FLOW RATE (CFS OR L/s)	*		
PEAK FLOW RATE (CFS OR L/s)	*		
RETURN PERIOD OF PEAK FLOW (YRS)	*		
SCREEN APERTURE (2400 OR 4700)	*		
PIPE DATA:	I.E.	MATERIAL	DIAMETER
INLET PIPE 1	*	*	*
INLET PIPE 2	*	*	*
OUTLET PIPE	*	*	*
RIM ELEVATION	*		
ANTI-FLOTATION BALLAST	WIDTH	HEIGHT	
	*	*	

NOTES/SPECIAL REQUIREMENTS:

* PER ENGINEER OF RECORD

GENERAL NOTES

1. CONTECH TO PROVIDE ALL MATERIALS UNLESS NOTED OTHERWISE.
2. DIMENSIONS MARKED WITH ( ) ARE REFERENCE DIMENSIONS. ACTUAL DIMENSIONS MAY VARY.
3. FOR FABRICATION DRAWINGS WITH DETAILED STRUCTURE DIMENSIONS AND WEIGHTS, PLEASE CONTACT YOUR CONTECH ENGINEERED SOLUTIONS LLC REPRESENTATIVE. www.ContechES.com
4. CDS WATER QUALITY STRUCTURE SHALL BE IN ACCORDANCE WITH ALL DESIGN DATA AND INFORMATION CONTAINED IN THIS DRAWING.
5. STRUCTURE SHALL MEET AASHTO HS20 AND CASTINGS SHALL MEET HS20 (AASHTO M 306) LOAD RATING, ASSUMING GROUNDWATER ELEVATION AT, OR BELOW, THE OUTLET PIPE INVERT ELEVATION. ENGINEER OF RECORD TO CONFIRM ACTUAL GROUNDWATER ELEVATION.
6. PVC HYDRAULIC SHEAR PLATE IS PLACED ON SHELF AT BOTTOM OF SCREEN CYLINDER. REMOVE AND REPLACE AS NECESSARY DURING MAINTENANCE CLEANING.

INSTALLATION NOTES

A. ANY SUB-BASE, BACKFILL DEPTH, AND/OR ANTI-FLOTATION PROVISIONS ARE SITE-SPECIFIC DESIGN CONSIDERATIONS AND SHALL BE SPECIFIED BY ENGINEER OF RECORD.
B. CONTRACTOR TO PROVIDE EQUIPMENT WITH SUFFICIENT LIFTING AND REACH CAPACITY TO LIFT AND SET THE CDS MANHOLE STRUCTURE (LIFTING CLUTCHES PROVIDED).
C. CONTRACTOR TO ADD JOINT SEALANT BETWEEN ALL STRUCTURE SECTIONS, AND ASSEMBLE STRUCTURE.
D. CONTRACTOR TO PROVIDE, INSTALL, AND GROUT PIPES. MATCH PIPE INVERTS WITH ELEVATIONS SHOWN.
E. CONTRACTOR TO TAKE APPROPRIATE MEASURES TO ASSURE UNIT IS WATER TIGHT, HOLDING WATER TO FLOWLINE INVERT MINIMUM. IT IS SUGGESTED THAT ALL JOINTS BELOW PIPE INVERTS ARE GROUTED.

CDS®

CONTECH®
ENGINEERED SOLUTIONS LLC
www.ContechES.com
9025 Centre Pointe Dr., Suite 400, West Chester, OH 45069
800-338-1122 513-645-7000 513-645-7993 FAX

CDS2025-5-C
INLINE CDS
STANDARD DETAIL

I:\STORMWATER\COMMOPS\22 CDS\40 STANDARD DRAWINGS\INLINE (CDS-C)\DWG\CDS2025-5-C-DTL.DWG 5/13/2014 5:56 PM

SITE SPECIFIC DATA

PROJECT NAME	South Otay Mesa		
PROJECT LOCATION	San Diego, CA		
STRUCTURE ID	BMP 1		
TREATMENT REQUIRED			
VOLUME BASED (CF)	FLOW BASED (CFS)		
5,072			
TREATMENT HGL AVAILABLE (FT)			
PEAK BYPASS REQUIRED (CFS) – IF APPLICABLE			
PIPE DATA	I.E.	MATERIAL	DIAMETER
INLET PIPE 1			
INLET PIPE 2			
OUTLET PIPE			
	PRETREATMENT	BIOFILTRATION	DISCHARGE
RIM ELEVATION			
SURFACE LOAD	PARKWAY	OPEN PLANTER	PARKWAY
FRAME & COVER	ø30"	N/A	ø24"
WETLANDMEDIA VOLUME (CY)			3.05
WETLANDMEDIA DELIVERY METHOD			TBD
ORIFICE SIZE (DIA. INCHES)			ø1.71"
MAXIMUM PICK WEIGHT (LBS)			27000
NOTES:			

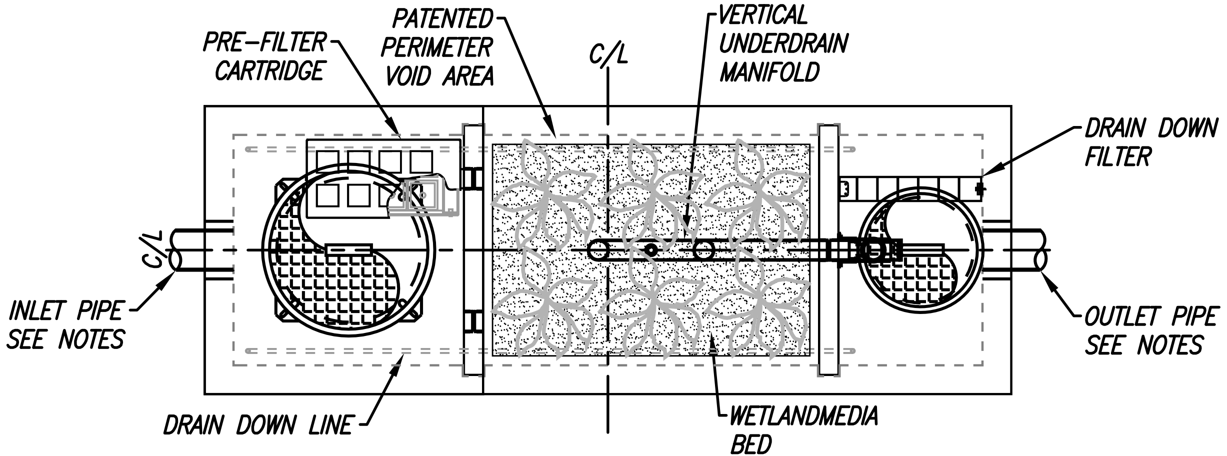

PLAN VIEW

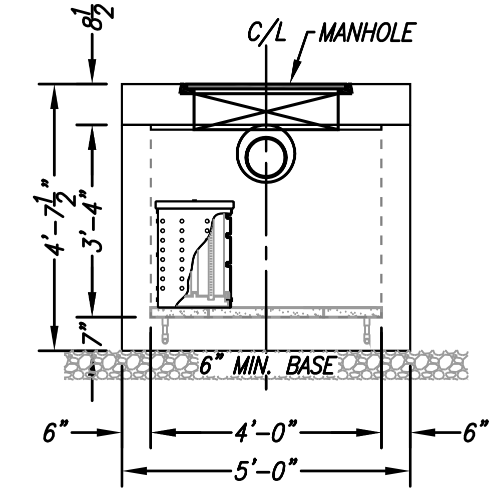

LEFT END VIEW

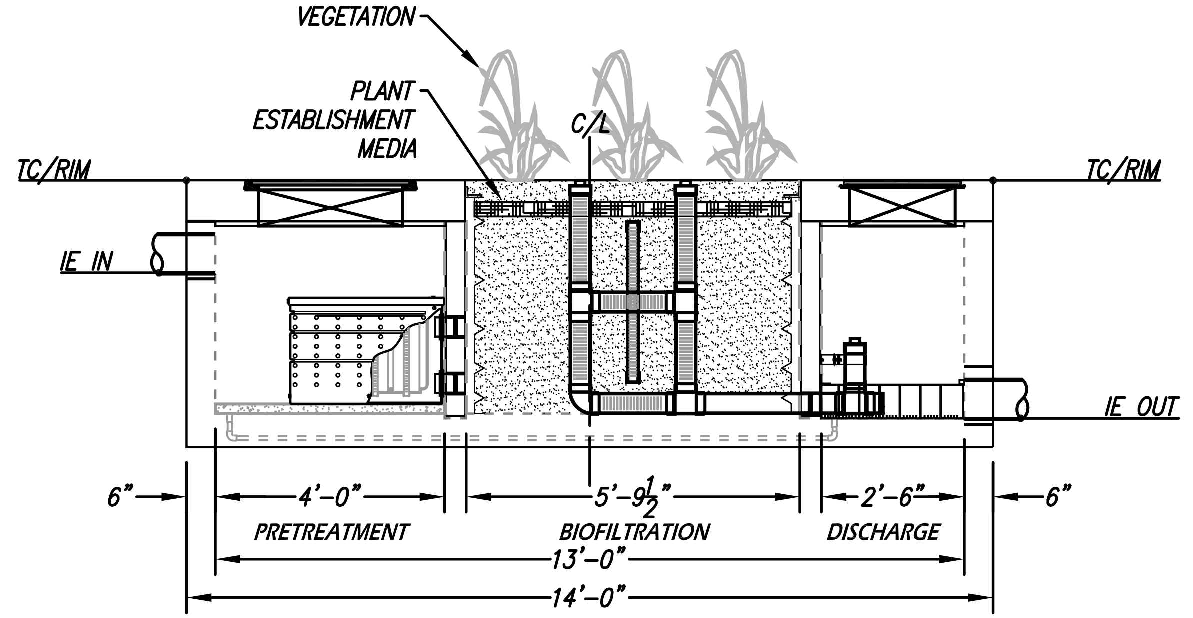

ELEVATION VIEW

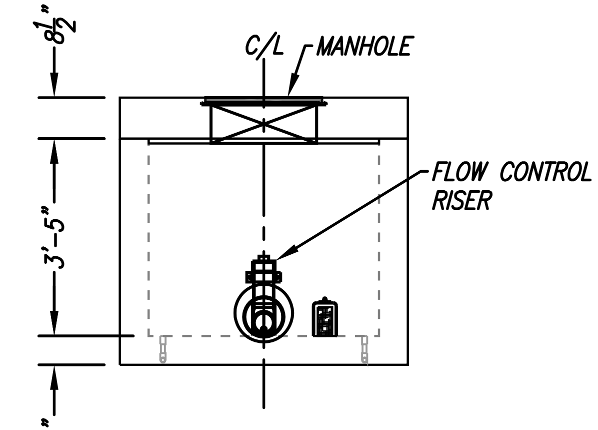

RIGHT END VIEW

INSTALLATION NOTES

1. CONTRACTOR TO PROVIDE ALL LABOR, EQUIPMENT, MATERIALS AND INCIDENTALS REQUIRED TO OFFLOAD AND INSTALL THE SYSTEM AND APPURTENANCES IN ACCORDANCE WITH THIS DRAWING AND THE MANUFACTURERS SPECIFICATIONS, UNLESS OTHERWISE STATED IN MANUFACTURERS CONTRACT.
2. UNIT MUST BE INSTALLED ON LEVEL BASE. MANUFACTURER RECOMMENDS A MINIMUM 6" LEVEL ROCK BASE UNLESS SPECIFIED BY THE PROJECT ENGINEER. CONTRACTOR IS RESPONSIBLE TO VERIFY PROJECT ENGINEERS RECOMMENDED BASE SPECIFICATIONS.
3. ALL PIPES MUST BE FLUSH WITH INSIDE SURFACE OF CONCRETE. (PIPES CANNOT INTRUDE BEYOND FLUSH). INVERT OF OUTFLOW PIPE MUST BE FLUSH WITH DISCHARGE CHAMBER FLOOR. ALL GAPS AROUND PIPES SHALL BE SEALED WATER TIGHT WITH A NON-SHRINK GROUT PER MANUFACTURERS STANDARD CONNECTION DETAIL AND SHALL MEET OR EXCEED REGIONAL PIPE CONNECTION STANDARDS.
4. CONTRACTOR TO SUPPLY AND INSTALL ALL EXTERNAL CONNECTING PIPES.
5. CONTRACTOR RESPONSIBLE FOR INSTALLATION OF ALL RISERS, MANHOLES, AND HATCHES. CONTRACTOR TO GROUT ALL MANHOLES AND HATCHES TO MATCH FINISHED SURFACE UNLESS SPECIFIED OTHERWISE.
6. DRIP OR SPRAY IRRIGATION REQUIRED ON ALL UNITS WITH VEGETATION.

GENERAL NOTES

1. MANUFACTURER TO PROVIDE ALL MATERIALS UNLESS OTHERWISE NOTED.
2. ALL DIMENSIONS, ELEVATIONS, SPECIFICATIONS AND CAPACITIES ARE SUBJECT TO CHANGE. FOR PROJECT SPECIFIC DRAWINGS DETAILING EXACT DIMENSIONS, WEIGHTS AND ACCESSORIES PLEASE CONTACT MANUFACTURER.

TREATMENT FLOW (CFS)	0.144
OPERATING HEAD (FT)	3.4
PRETREATMENT LOADING RATE (GPM/SF)	TBD
WETLAND MEDIA LOADING RATE (GPM/SF)	1.0

THE PRODUCT DESCRIBED MAY BE PROTECTED BY ONE OR MORE OF THE FOLLOWING US PATENTS: 7,425,262; 7,470,362; 7,674,378; 8,303,816; RELATED FOREIGN PATENTS OR OTHER PATENTS PENDING

PROPRIETARY AND CONFIDENTIAL:

MODULAR WETLANDS
www.ModularWetlands.com | (855) 5MOD-WET

MWS-L-4-13-V
STORMWATER BIOFILTRATION SYSTEM
STANDARD DETAIL

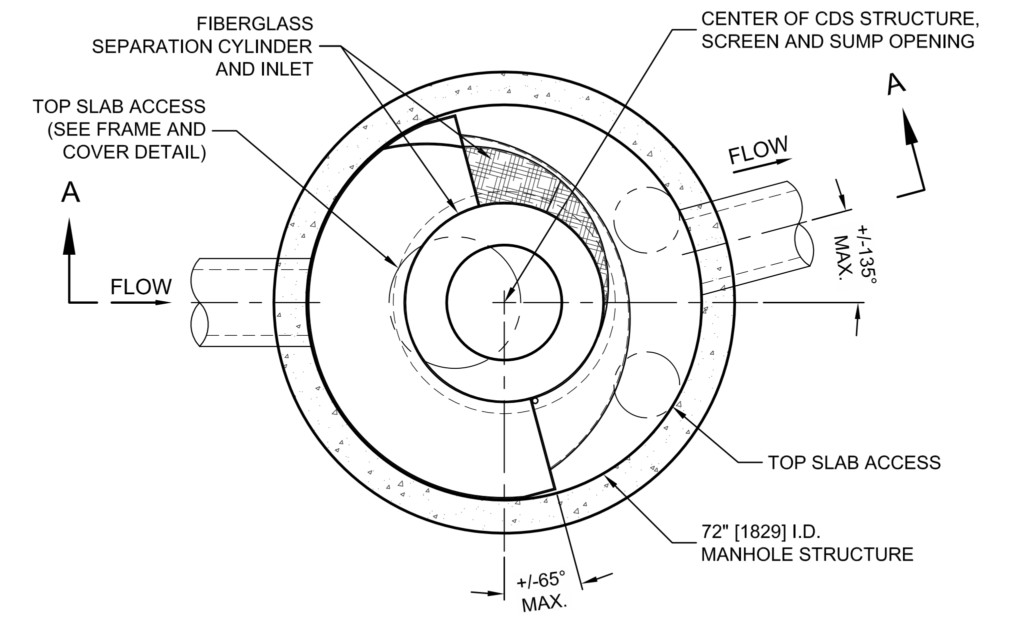

PLAN VIEW B-B

N.T.S.

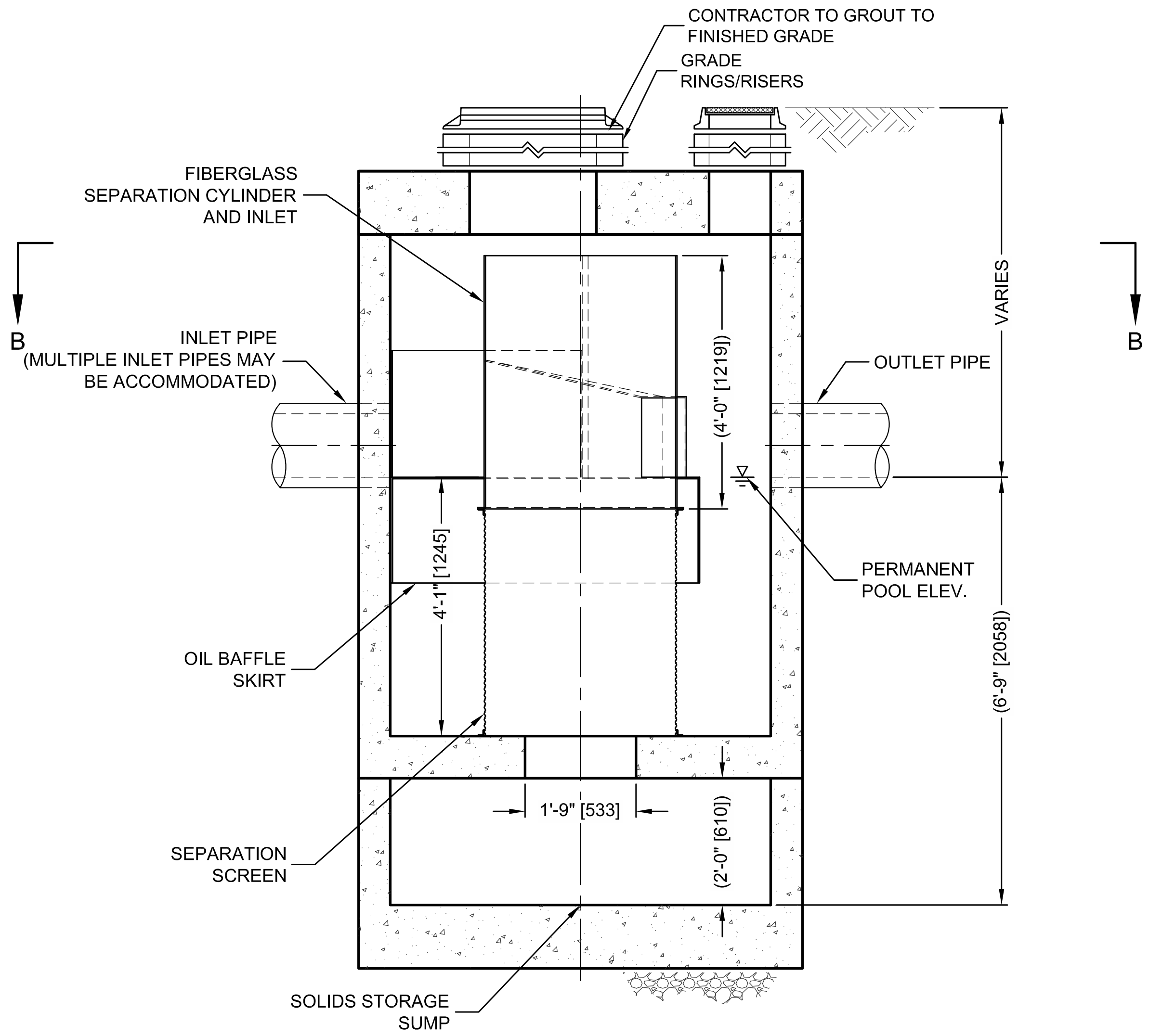

ELEVATION A-A

N.T.S.

THIS PRODUCT MAY BE PROTECTED BY ONE OR MORE OF THE FOLLOWING U.S. PATENTS: 5,788,848; 6,641,720; 6,511,595; 6,581,783; RELATED FOREIGN PATENTS, OR OTHER PATENTS PENDING.

CDS3035-6-C DESIGN NOTES

CDS3035-6-C RATED TREATMENT CAPACITY IS 3.8 CFS [107.6 L/s], OR PER LOCAL REGULATIONS. MAXIMUM HYDRAULIC INTERNAL BYPASS CAPACITY IS 20.0 CFS [566 L/s]. IF THE SITE CONDITIONS EXCEED 20.0 CFS [566 L/s], AN UPSTREAM BYPASS STRUCTURE IS REQUIRED.

THE STANDARD CDS3035-6-C CONFIGURATION IS SHOWN. ALTERNATE CONFIGURATIONS ARE AVAILABLE AND ARE LISTED BELOW. SOME CONFIGURATIONS MAY BE COMBINED TO SUIT SITE REQUIREMENTS.

CONFIGURATION DESCRIPTION BMP-3
GRATED INLET ONLY (NO INLET PIPE)
GRATED INLET WITH INLET PIPE OR PIPES
CURB INLET ONLY (NO INLET PIPE)
CURB INLET WITH INLET PIPE OR PIPES
SEPARATE OIL BAFFLE (SINGLE INLET PIPE REQUIRED FOR THIS CONFIGURATION)
SEDIMENT WEIR FOR NJDEP / NJCAT CONFORMING UNITS

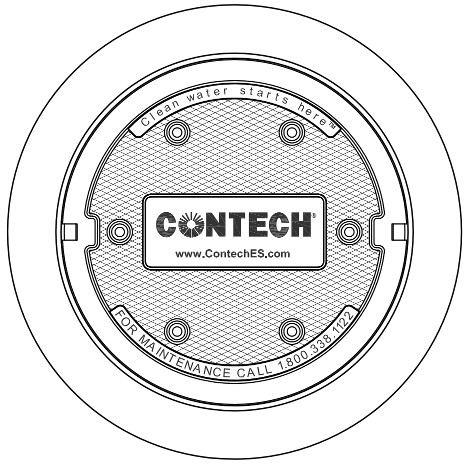

FRAME AND COVER

(DIAMETER VARIES)
N.T.S.

SITE SPECIFIC DATA REQUIREMENTS

STRUCTURE ID	
WATER QUALITY FLOW RATE (CFS OR L/s)	*
PEAK FLOW RATE (CFS OR L/s)	*
RETURN PERIOD OF PEAK FLOW (YRS)	*
SCREEN APERTURE (2400 OR 4700)	*

PIPE DATA:	I.E.	MATERIAL	DIAMETER
INLET PIPE 1	*	*	*
INLET PIPE 2	*	*	*
OUTLET PIPE	*	*	*

RIM ELEVATION	*

ANTI-FLOTATION BALLAST	WIDTH	HEIGHT
	*	*

NOTES/SPECIAL REQUIREMENTS:

* PER ENGINEER OF RECORD

GENERAL NOTES
1. CONTECH TO PROVIDE ALL MATERIALS UNLESS NOTED OTHERWISE.
2. DIMENSIONS MARKED WITH ( ) ARE REFERENCE DIMENSIONS. ACTUAL DIMENSIONS MAY VARY.
3. FOR FABRICATION DRAWINGS WITH DETAILED STRUCTURE DIMENSIONS AND WEIGHTS, PLEASE CONTACT YOUR CONTECH ENGINEERED SOLUTIONS LLC REPRESENTATIVE. www.ContechES.com
4. CDS WATER QUALITY STRUCTURE SHALL BE IN ACCORDANCE WITH ALL DESIGN DATA AND INFORMATION CONTAINED IN THIS DRAWING.
5. STRUCTURE SHALL MEET AASHTO HS20 AND CASTINGS SHALL MEET HS20 (AASHTO M 306) LOAD RATING, ASSUMING GROUNDWATER ELEVATION AT, OR BELOW, THE OUTLET PIPE INVERT ELEVATION. ENGINEER OF RECORD TO CONFIRM ACTUAL GROUNDWATER ELEVATION.
6. PVC HYDRAULIC SHEAR PLATE IS PLACED ON SHELF AT BOTTOM OF SCREEN CYLINDER. REMOVE AND REPLACE AS NECESSARY DURING MAINTENANCE CLEANING.

INSTALLATION NOTES
A. ANY SUB-BASE, BACKFILL DEPTH, AND/OR ANTI-FLOTATION PROVISIONS ARE SITE-SPECIFIC DESIGN CONSIDERATIONS AND SHALL BE SPECIFIED BY ENGINEER OF RECORD.
B. CONTRACTOR TO PROVIDE EQUIPMENT WITH SUFFICIENT LIFTING AND REACH CAPACITY TO LIFT AND SET THE CDS MANHOLE STRUCTURE (LIFTING CLUTCHES PROVIDED).
C. CONTRACTOR TO ADD JOINT SEALANT BETWEEN ALL STRUCTURE SECTIONS, AND ASSEMBLE STRUCTURE.
D. CONTRACTOR TO PROVIDE, INSTALL, AND GROUT PIPES. MATCH PIPE INVERTS WITH ELEVATIONS SHOWN.
E. CONTRACTOR TO TAKE APPROPRIATE MEASURES TO ASSURE UNIT IS WATER TIGHT, HOLDING WATER TO FLOWLINE INVERT MINIMUM. IT IS SUGGESTED THAT ALL JOINTS BELOW PIPE INVERTS ARE GROUTED.

CONTECH®
ENGINEERED SOLUTIONS LLC
www.ContechES.com
9025 Centre Pointe Dr., Suite 400, West Chester, OH 45069
800-338-1122 513-645-7000 513-645-7993 FAX

CDS3035-6-C
INLINE CDS
STANDARD DETAIL

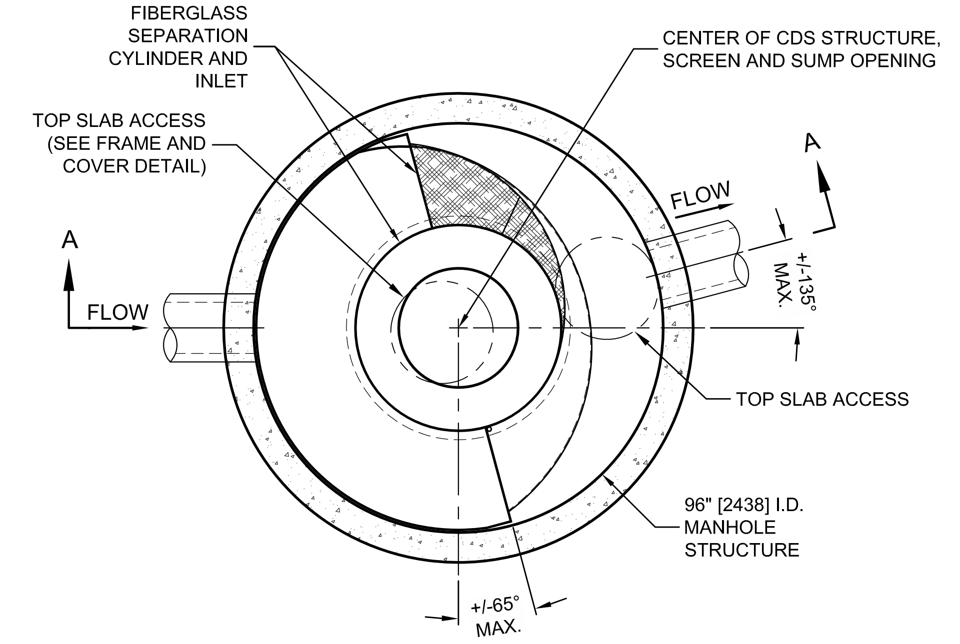

PLAN VIEW B-B

N.T.S.

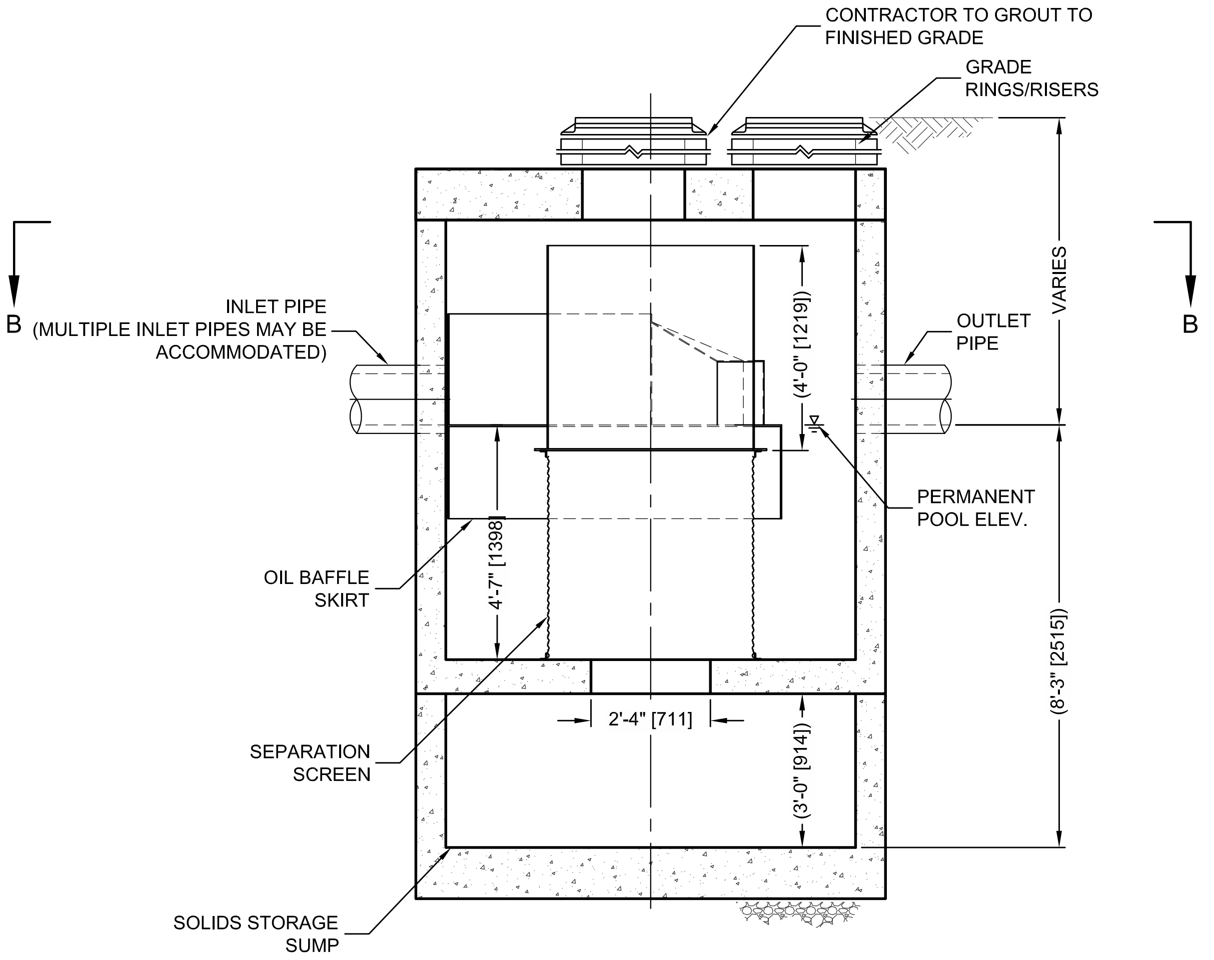

ELEVATION A-A

N.T.S.

THIS PRODUCT MAY BE PROTECTED BY ONE OR MORE OF THE
FOLLOWING U.S. PATENTS: 5,788,848; 6,641,720; 6,511,595; 6,581,783;
RELATED FOREIGN PATENTS, OR OTHER PATENTS PENDING.

CDS4040-8-C DESIGN NOTES

CDS4040-8-C RATED TREATMENT CAPACITY IS 6.0 CFS [169.9 L/s], OR PER LOCAL REGULATIONS. MAXIMUM HYDRAULIC INTERNAL BYPASS CAPACITY IS 30.0 CFS [850 L/s]. IF THE SITE CONDITIONS EXCEED 30.0 CFS [850 L/s], AN UPSTREAM BYPASS STRUCTURE IS REQUIRED.

THE STANDARD CDS4040-8-C CONFIGURATION IS SHOWN. ALTERNATE CONFIGURATIONS ARE AVAILABLE AND ARE LISTED BELOW. SOME CONFIGURATIONS MAY BE COMBINED TO SUIT SITE REQUIREMENTS.

CONFIGURATION DESCRIPTION BMP-2
GRATED INLET ONLY (NO INLET PIPE)
GRATED INLET WITH INLET PIPE OR PIPES
CURB INLET ONLY (NO INLET PIPE)
CURB INLET WITH INLET PIPE OR PIPES
SEPARATE OIL BAFFLE (SINGLE INLET PIPE REQUIRED FOR THIS CONFIGURATION)
SEDIMENT WEIR FOR NJDEP / NJCAT CONFORMING UNITS

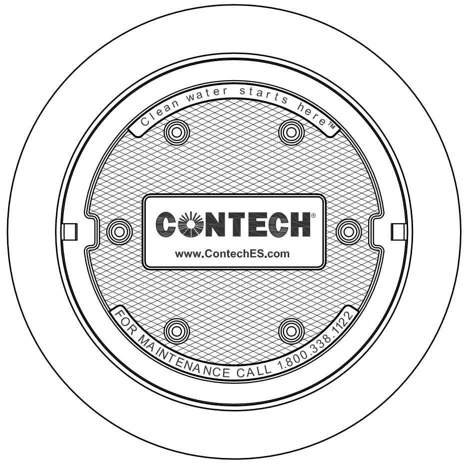

FRAME AND COVER

(DIAMETER VARIES)

N.T.S.

SITE SPECIFIC DATA REQUIREMENTS

STRUCTURE ID			
WATER QUALITY FLOW RATE (CFS OR L/s)			*
PEAK FLOW RATE (CFS OR L/s)			*
RETURN PERIOD OF PEAK FLOW (YRS)			*
SCREEN APERTURE (2400 OR 4700)			*
PIPE DATA:	I.E.	MATERIAL	DIAMETER
INLET PIPE 1	*	*	*
INLET PIPE 2	*	*	*
OUTLET PIPE	*	*	*
RIM ELEVATION			*
ANTI-FLOTATION BALLAST		WIDTH	HEIGHT
		*	*

NOTES/SPECIAL REQUIREMENTS:

* PER ENGINEER OF RECORD

GENERAL NOTES

1. CONTECH TO PROVIDE ALL MATERIALS UNLESS NOTED OTHERWISE.
2. DIMENSIONS MARKED WITH ( ) ARE REFERENCE DIMENSIONS. ACTUAL DIMENSIONS MAY VARY.
3. FOR FABRICATION DRAWINGS WITH DETAILED STRUCTURE DIMENSIONS AND WEIGHTS, PLEASE CONTACT YOUR CONTECH ENGINEERED SOLUTIONS LLC REPRESENTATIVE. www.ContechES.com
4. CDS WATER QUALITY STRUCTURE SHALL BE IN ACCORDANCE WITH ALL DESIGN DATA AND INFORMATION CONTAINED IN THIS DRAWING.
5. STRUCTURE SHALL MEET AASHTO HS20 AND CASTINGS SHALL MEET HS20 (AASHTO M 306) LOAD RATING, ASSUMING GROUNDWATER ELEVATION AT, OR BELOW, THE OUTLET PIPE INVERT ELEVATION. ENGINEER OF RECORD TO CONFIRM ACTUAL GROUNDWATER ELEVATION.
6. PVC HYDRAULIC SHEAR PLATE IS PLACED ON SHELF AT BOTTOM OF SCREEN CYLINDER. REMOVE AND REPLACE AS NECESSARY DURING MAINTENANCE CLEANING.

INSTALLATION NOTES

A. ANY SUB-BASE, BACKFILL DEPTH, AND/OR ANTI-FLOTATION PROVISIONS ARE SITE-SPECIFIC DESIGN CONSIDERATIONS AND SHALL BE SPECIFIED BY ENGINEER OF RECORD.
B. CONTRACTOR TO PROVIDE EQUIPMENT WITH SUFFICIENT LIFTING AND REACH CAPACITY TO LIFT AND SET THE CDS MANHOLE STRUCTURE (LIFTING CLUTCHES PROVIDED).
C. CONTRACTOR TO ADD JOINT SEALANT BETWEEN ALL STRUCTURE SECTIONS, AND ASSEMBLE STRUCTURE.
D. CONTRACTOR TO PROVIDE, INSTALL, AND GROUT PIPES. MATCH PIPE INVERTS WITH ELEVATIONS SHOWN.
E. CONTRACTOR TO TAKE APPROPRIATE MEASURES TO ASSURE UNIT IS WATER TIGHT, HOLDING WATER TO FLOWLINE INVERT MINIMUM. IT IS SUGGESTED THAT ALL JOINTS BELOW PIPE INVERTS ARE GROUTED.

CONTECH®
ENGINEERED SOLUTIONS LLC
www.ContechES.com
9025 Centre Pointe Dr., Suite 400, West Chester, OH 45069
800-338-1122 513-645-7000 513-645-7993 FAX

CDS4040-8-C
INLINE CDS
STANDARD DETAIL

I:\STORMWATER\COMMOPS\22 CDS\40 STANDARD DRAWINGS\INLINE (CDS-C)\DWG\CDS4040-8-C-DTL.DWG 5/13/2014 6:05 PM

SITE SPECIFIC DATA			
PROJECT NUMBER			
ORDER NUMBER			
PROJECT NAME			
PROJECT LOCATION			
STRUCTURE ID			
TREATMENT REQUIRED			
VOLUME BASED (CF)		FLOW BASED (CFS)	
TREATMENT HGL AVAILABLE (FT)			
PEAK BYPASS REQUIRED (CFS) – IF APPLICABLE			
PIPE DATA	I.E.	MATERIAL	DIAMETER
INLET PIPE 1			
INLET PIPE 2			
OUTLET PIPE			
	PRETREATMENT	BIOFILTRATION	DISCHARGE
RIM ELEVATION			
SURFACE LOAD	PEDESTRIAN	OPEN PLANTER	PEDESTRIAN
FRAME & COVER	3 EA ø30"	N/A	2 EA ø24"
WETLANDMEDIA VOLUME (CY)			TBD
ORIFICE SIZE (DIA. INCHES)			TBD
NOTES: PRELIMINARY NOT FOR CONSTRUCTION.			

INSTALLATION NOTES

1. CONTRACTOR TO PROVIDE ALL LABOR, EQUIPMENT, MATERIALS AND INCIDENTALS REQUIRED TO OFFLOAD AND INSTALL THE SYSTEM AND APPURTENANCES IN ACCORDANCE WITH THIS DRAWING AND THE MANUFACTURERS SPECIFICATIONS, UNLESS OTHERWISE STATED IN MANUFACTURERS CONTRACT.
2. UNIT MUST BE INSTALLED ON LEVEL BASE. MANUFACTURER RECOMMENDS A MINIMUM 6" LEVEL ROCK BASE UNLESS SPECIFIED BY THE PROJECT ENGINEER. CONTRACTOR IS RESPONSIBLE TO VERIFY PROJECT ENGINEERS RECOMMENDED BASE SPECIFICATIONS.
3. ALL PIPES MUST BE FLUSH WITH INSIDE SURFACE OF CONCRETE. (PIPES CANNOT INTRUDE BEYOND FLUSH). INVERT OF OUTFLOW PIPE MUST BE FLUSH WITH DISCHARGE CHAMBER FLOOR. ALL GAPS AROUND PIPES SHALL BE SEALED WATER TIGHT WITH A NON-SHRINK GROUT PER MANUFACTURERS STANDARD CONNECTION DETAIL AND SHALL MEET OR EXCEED REGIONAL PIPE CONNECTION STANDARDS.
4. CONTRACTOR TO SUPPLY AND INSTALL ALL EXTERNAL CONNECTING PIPES.
5. CONTRACTOR RESPONSIBLE FOR INSTALLATION OF ALL RISERS, MANHOLES, AND HATCHES. CONTRACTOR TO GROUT ALL MANHOLES AND HATCHES TO MATCH FINISHED SURFACE UNLESS SPECIFIED OTHERWISE.
6. DRIP OR SPRAY IRRIGATION REQUIRED ON ALL UNITS WITH VEGETATION.
7. CONTRACTOR RESPONSIBLE FOR CONTACTING MODULAR WETLANDS FOR ACTIVATION OF UNIT. MANUFACTURES WARRANTY IS VOID WITH OUT PROPER ACTIVATION BY A MODULAR WETLANDS REPRESENTATIVE.

GENERAL NOTES

1. MANUFACTURER TO PROVIDE ALL MATERIALS UNLESS OTHERWISE NOTED.
2. ALL DIMENSIONS, ELEVATIONS, SPECIFICATIONS AND CAPACITIES ARE SUBJECT TO CHANGE. FOR PROJECT SPECIFIC DRAWINGS DETAILING EXACT DIMENSIONS, WEIGHTS AND ACCESSORIES PLEASE CONTACT MANUFACTURER.

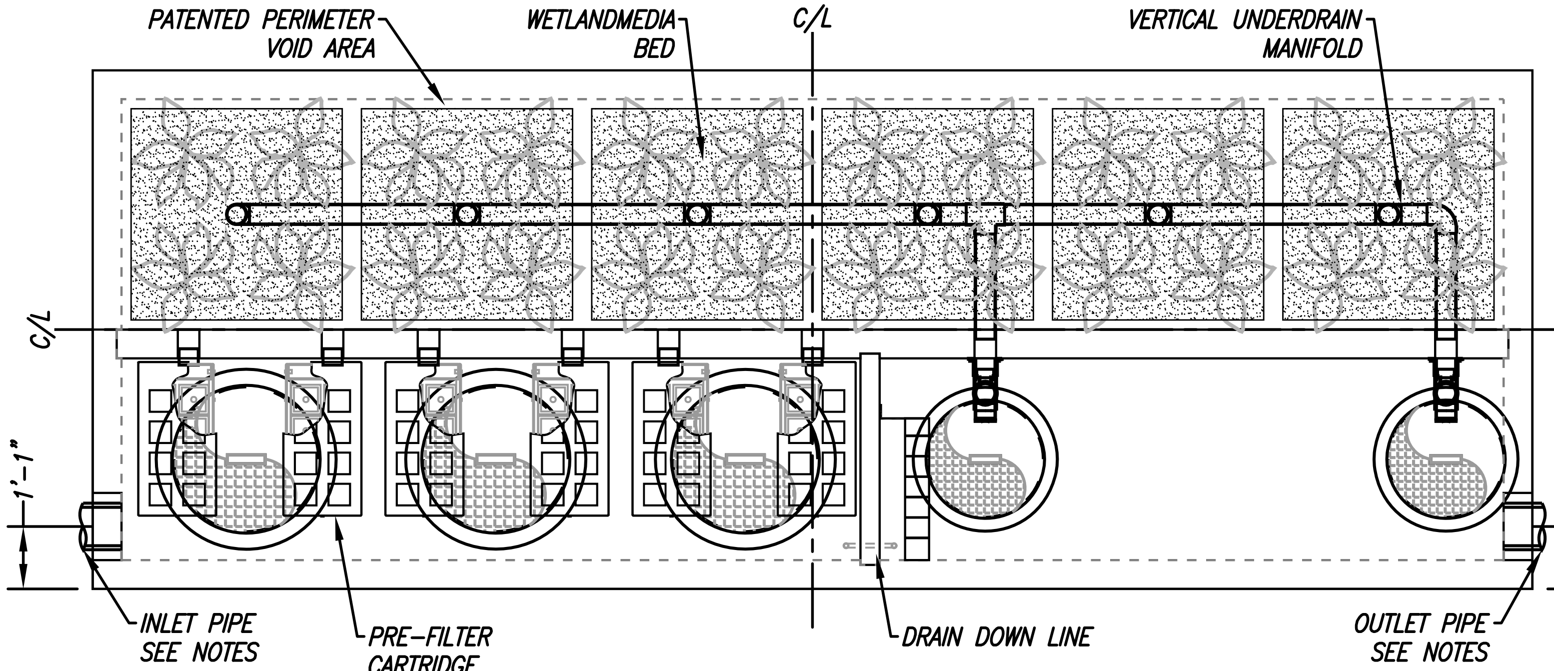

PLAN VIEW

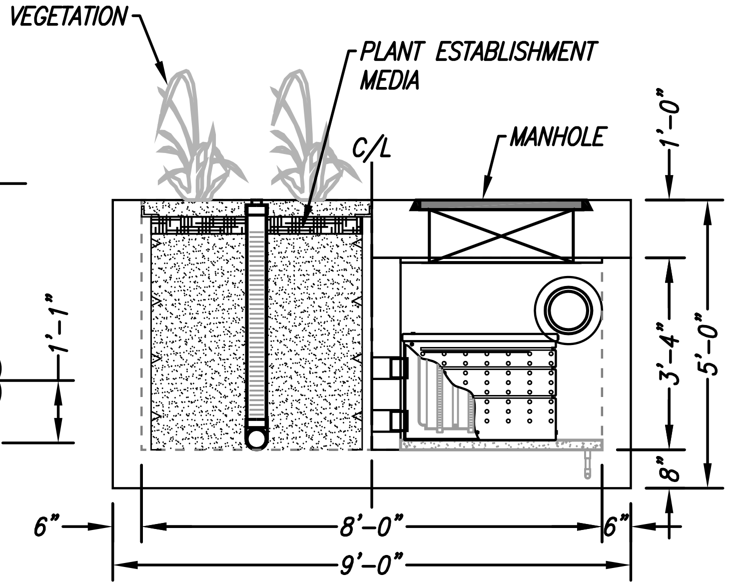

LEFT END VIEW

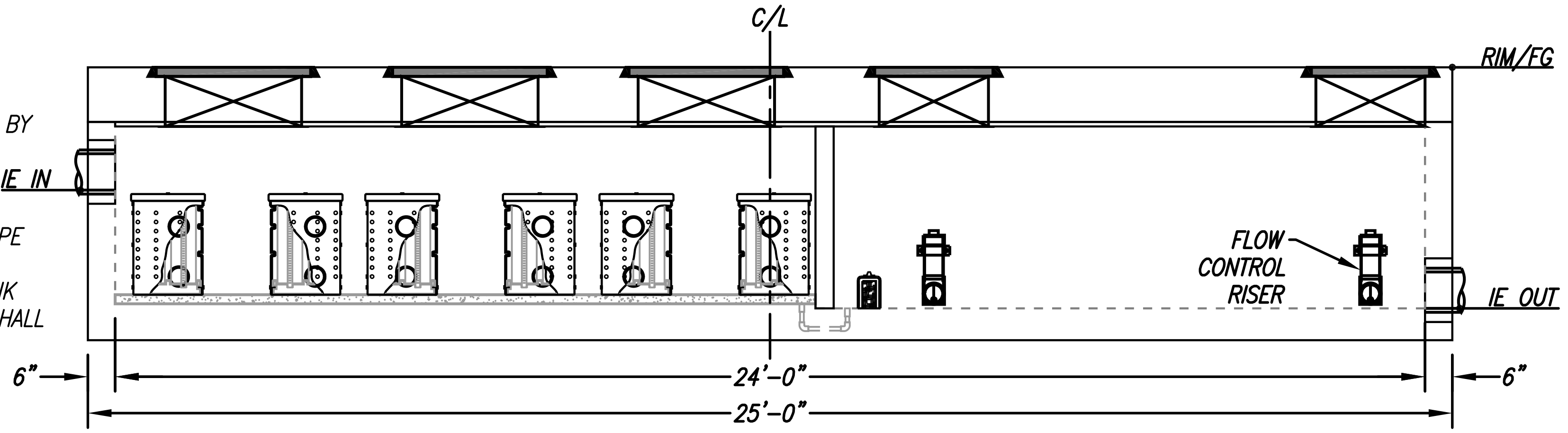

ELEVATION VIEW

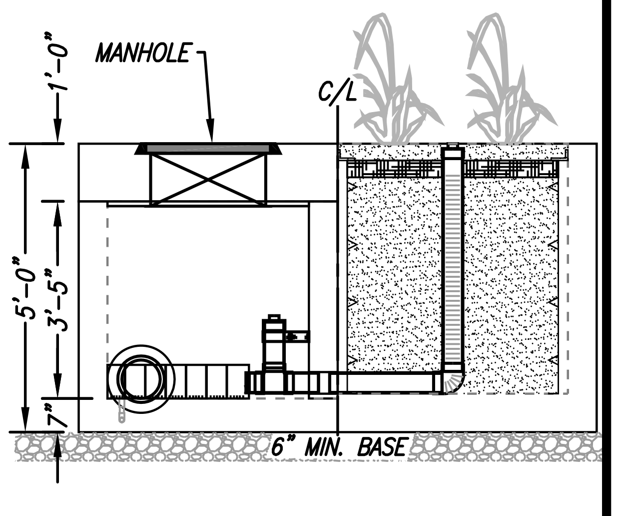

RIGHT END VIEW

TREATMENT FLOW (CFS)	0.693
OPERATING HEAD (FT)	3.4
PRETREATMENT LOADING RATE (GPM/SF)	2.0
WETLAND MEDIA LOADING RATE (GPM/SF)	1.0

MODULAR WETLANDS

THIS PRODUCT MAY BE PROTECTED BY ONE OR MORE OF THE FOLLOWING US PATENTS: 7,425,262; 7,470,362; 7,674,378; 8,303,816; RELATED FOREIGN PATENTS OR OTHER PATENTS PENDING

PROPRIETARY AND CONFIDENTIAL:

THE INFORMATION CONTAINED IN THIS DOCUMENT IS THE SOLE PROPERTY OF FORTERRA AND ITS COMPANIES. THIS DOCUMENT, NOR ANY PART THEREOF, MAY BE USED, REPRODUCED OR MODIFIED IN ANY MANNER WITH OUT THE WRITTEN CONSENT OF FORTERRA.

Bio Clean
A Forterra Company

MWS-L-8-24-V
STORMWATER BIOFILTRATION SYSTEM
STANDARD DETAIL

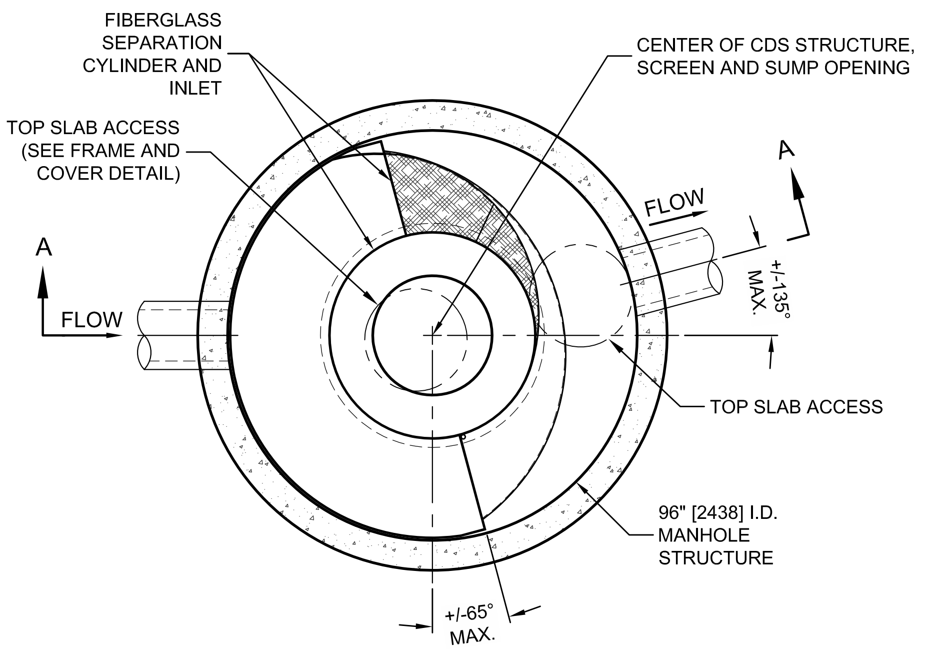

PLAN VIEW B-B

N.T.S.

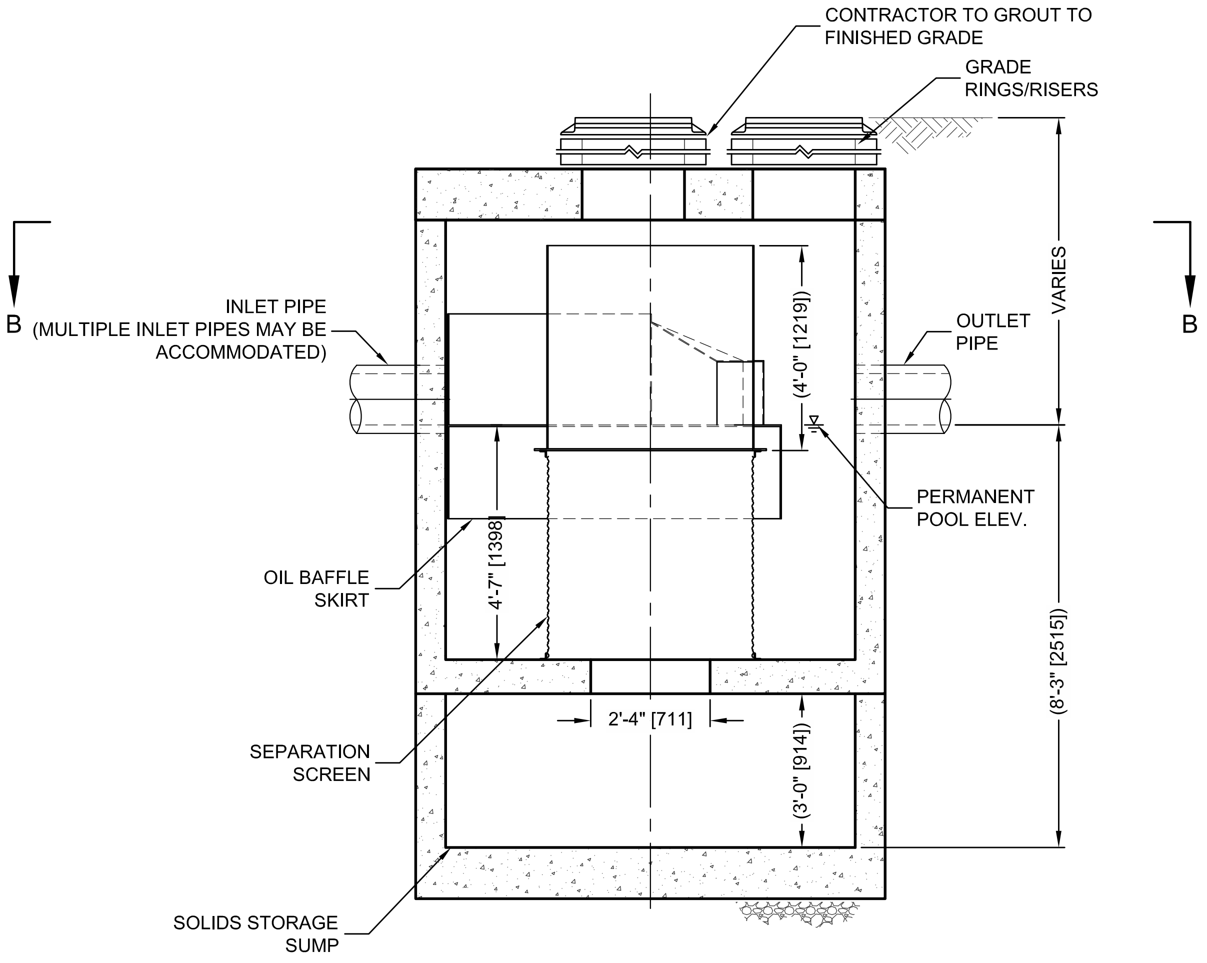

ELEVATION A-A

N.T.S.

THIS PRODUCT MAY BE PROTECTED BY ONE OR MORE OF THE
FOLLOWING U.S. PATENTS: 5,788,848; 6,641,720; 6,511,595; 6,581,783;
RELATED FOREIGN PATENTS, OR OTHER PATENTS PENDING.

I:\STORMWATER\COMMOPS\22 CDS\40 STANDARD DRAWINGS\INLINE (CDS-C)\DWG\CDS4040-8-C-DTL.DWG 5/13/2014 6:05 PM

CDS4040-8-C DESIGN NOTES

CDS4040-8-C RATED TREATMENT CAPACITY IS 6.0 CFS [169.9 L/s], OR PER LOCAL REGULATIONS. MAXIMUM HYDRAULIC INTERNAL BYPASS CAPACITY IS 30.0 CFS [850 L/s]. IF THE SITE CONDITIONS EXCEED 30.0 CFS [850 L/s], AN UPSTREAM BYPASS STRUCTURE IS REQUIRED.

THE STANDARD CDS4040-8-C CONFIGURATION IS SHOWN. ALTERNATE CONFIGURATIONS ARE AVAILABLE AND ARE LISTED BELOW. SOME CONFIGURATIONS MAY BE COMBINED TO SUIT SITE REQUIREMENTS.

CONFIGURATION DESCRIPTION BMP-2

GRATED INLET ONLY (NO INLET PIPE)
GRATED INLET WITH INLET PIPE OR PIPES
CURB INLET ONLY (NO INLET PIPE)
CURB INLET WITH INLET PIPE OR PIPES
SEPARATE OIL BAFFLE (SINGLE INLET PIPE REQUIRED FOR THIS CONFIGURATION)
SEDIMENT WEIR FOR NJDEP / NJCAT CONFORMING UNITS

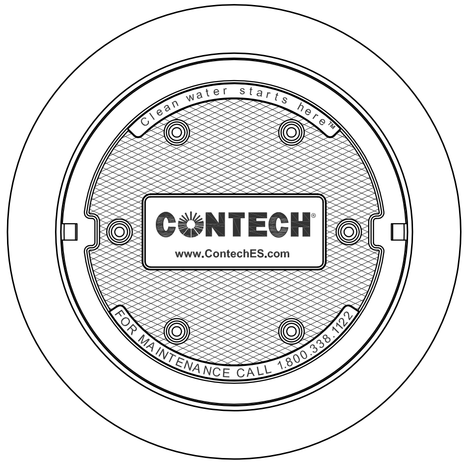

FRAME AND COVER

(DIAMETER VARIES)
N.T.S.

SITE SPECIFIC DATA REQUIREMENTS

STRUCTURE ID	
WATER QUALITY FLOW RATE (CFS OR L/s)	*
PEAK FLOW RATE (CFS OR L/s)	*
RETURN PERIOD OF PEAK FLOW (YRS)	*
SCREEN APERTURE (2400 OR 4700)	*

PIPE DATA:	I.E.	MATERIAL	DIAMETER
INLET PIPE 1	*	*	*
INLET PIPE 2	*	*	*
OUTLET PIPE	*	*	*

RIM ELEVATION	*

ANTI-FLOTATION BALLAST	WIDTH	HEIGHT
	*	*

NOTES/SPECIAL REQUIREMENTS:

* PER ENGINEER OF RECORD

GENERAL NOTES

1. CONTECH TO PROVIDE ALL MATERIALS UNLESS NOTED OTHERWISE.
2. DIMENSIONS MARKED WITH ( ) ARE REFERENCE DIMENSIONS. ACTUAL DIMENSIONS MAY VARY.
3. FOR FABRICATION DRAWINGS WITH DETAILED STRUCTURE DIMENSIONS AND WEIGHTS, PLEASE CONTACT YOUR CONTECH ENGINEERED SOLUTIONS LLC REPRESENTATIVE. www.ContechES.com
4. CDS WATER QUALITY STRUCTURE SHALL BE IN ACCORDANCE WITH ALL DESIGN DATA AND INFORMATION CONTAINED IN THIS DRAWING.
5. STRUCTURE SHALL MEET AASHTO HS20 AND CASTINGS SHALL MEET HS20 (AASHTO M 306) LOAD RATING, ASSUMING GROUNDWATER ELEVATION AT, OR BELOW, THE OUTLET PIPE INVERT ELEVATION. ENGINEER OF RECORD TO CONFIRM ACTUAL GROUNDWATER ELEVATION.
6. PVC HYDRAULIC SHEAR PLATE IS PLACED ON SHELF AT BOTTOM OF SCREEN CYLINDER. REMOVE AND REPLACE AS NECESSARY DURING MAINTENANCE CLEANING.

INSTALLATION NOTES

A. ANY SUB-BASE, BACKFILL DEPTH, AND/OR ANTI-FLOTATION PROVISIONS ARE SITE-SPECIFIC DESIGN CONSIDERATIONS AND SHALL BE SPECIFIED BY ENGINEER OF RECORD.
B. CONTRACTOR TO PROVIDE EQUIPMENT WITH SUFFICIENT LIFTING AND REACH CAPACITY TO LIFT AND SET THE CDS MANHOLE STRUCTURE (LIFTING CLUTCHES PROVIDED).
C. CONTRACTOR TO ADD JOINT SEALANT BETWEEN ALL STRUCTURE SECTIONS, AND ASSEMBLE STRUCTURE.
D. CONTRACTOR TO PROVIDE, INSTALL, AND GROUT PIPES. MATCH PIPE INVERTS WITH ELEVATIONS SHOWN.
E. CONTRACTOR TO TAKE APPROPRIATE MEASURES TO ASSURE UNIT IS WATER TIGHT, HOLDING WATER TO FLOWLINE INVERT MINIMUM. IT IS SUGGESTED THAT ALL JOINTS BELOW PIPE INVERTS ARE GROUTED.

CONTECH®
ENGINEERED SOLUTIONS LLC
www.ContechES.com
9025 Centre Pointe Dr., Suite 400, West Chester, OH 45069
800-338-1122 513-645-7000 513-645-7993 FAX

CDS4040-8-C
INLINE CDS
STANDARD DETAIL

SITE SPECIFIC DATA

PROJECT NAME	South Otay Mesa		
PROJECT LOCATION	San Diego, CA		
STRUCTURE ID	BMP 1		
TREATMENT REQUIRED			
VOLUME BASED (CF)		FLOW BASED (CFS)	
5,072			
TREATMENT HGL AVAILABLE (FT)			
PEAK BYPASS REQUIRED (CFS) – IF APPLICABLE			
PIPE DATA	I.E.	MATERIAL	DIAMETER
INLET PIPE 1			
INLET PIPE 2			
OUTLET PIPE			
	PRETREATMENT	BIOFILTRATION	DISCHARGE
RIM ELEVATION			
SURFACE LOAD	PARKWAY	OPEN PLANTER	PARKWAY
FRAME & COVER	ø30"	N/A	ø24"
WETLANDMEDIA VOLUME (CY)			7.26
WETLANDMEDIA DELIVERY METHOD			TBD
ORIFICE SIZE (DIA. INCHES)			ø3.07"
MAXIMUM PICK WEIGHT (LBS)			TBD
NOTES:			

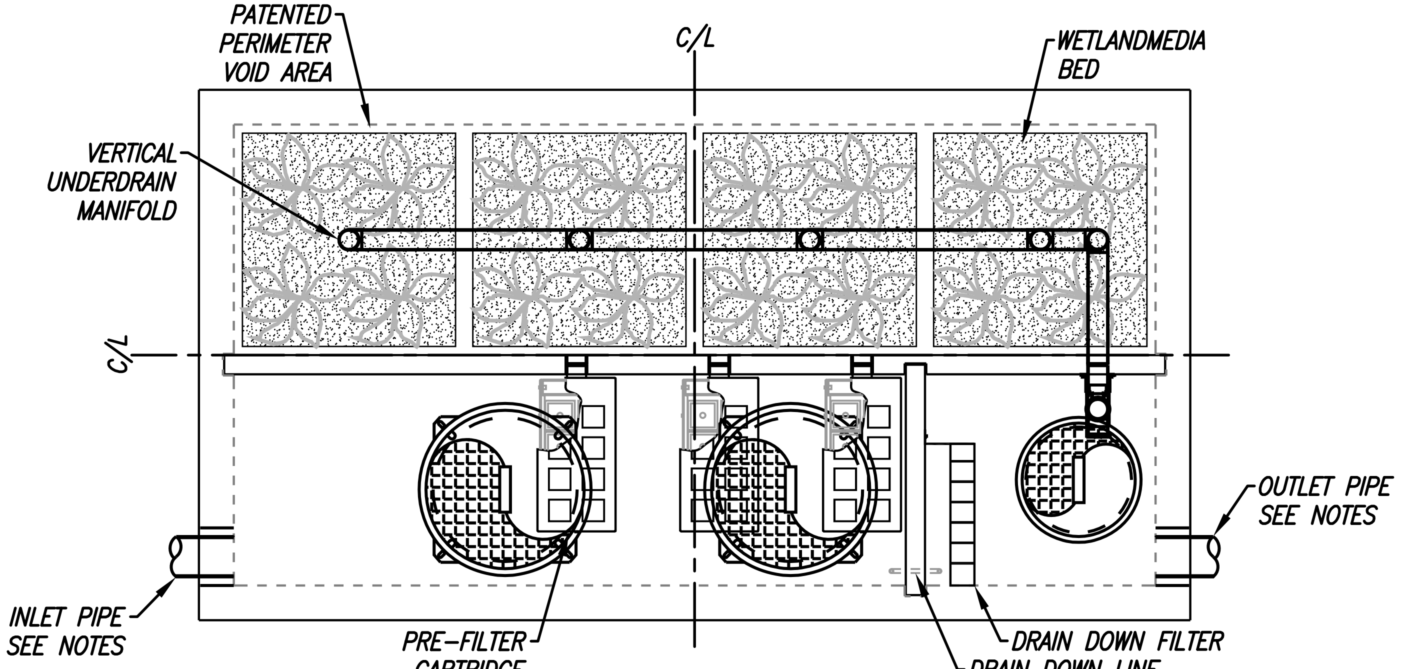

PLAN VIEW

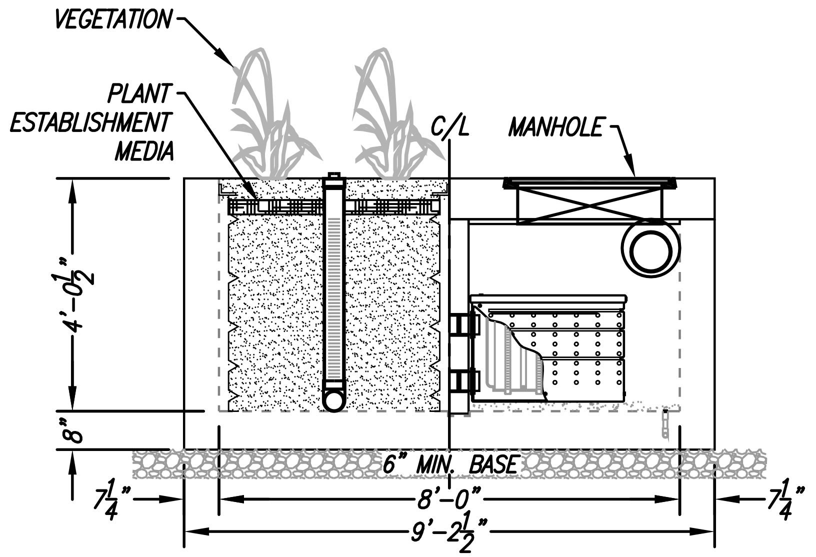

LEFT END VIEW

BIOFILTRATION/PRETREATMENT

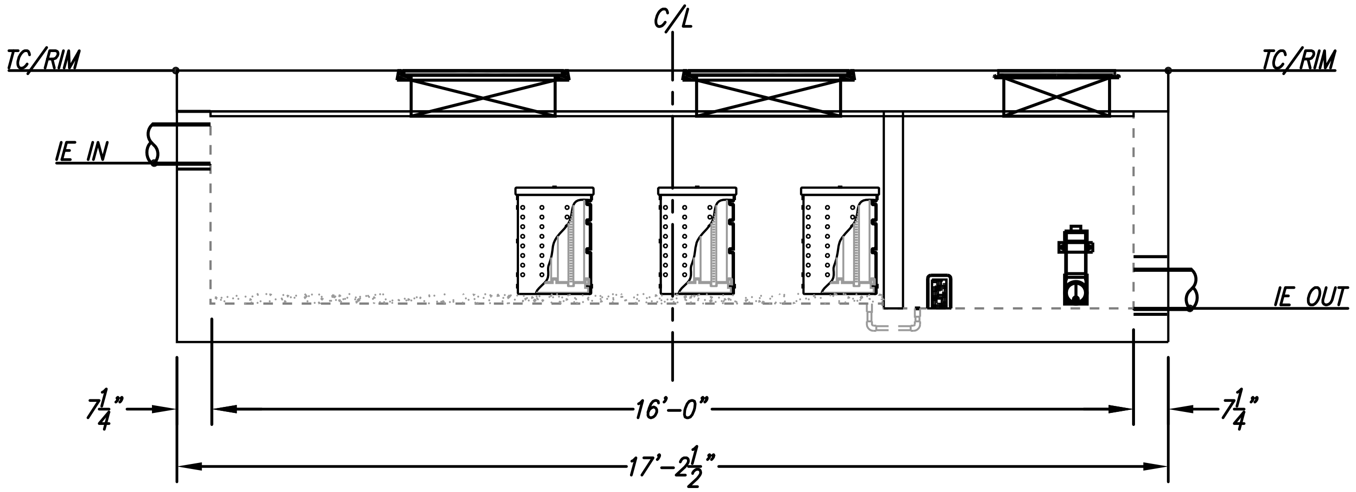

ELEVATION VIEW

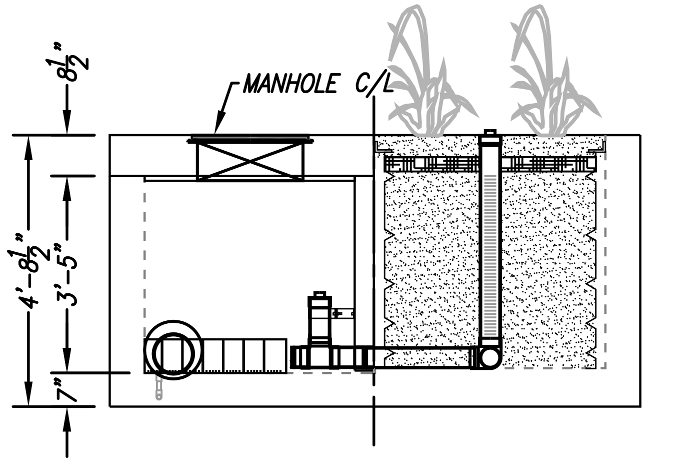

RIGHT END VIEW

DISCHARGE/BIOFILTRATION

INSTALLATION NOTES

1. CONTRACTOR TO PROVIDE ALL LABOR, EQUIPMENT, MATERIALS AND INCIDENTALS REQUIRED TO OFFLOAD AND INSTALL THE SYSTEM AND APPURTENANCES IN ACCORDANCE WITH THIS DRAWING AND THE MANUFACTURERS SPECIFICATIONS, UNLESS OTHERWISE STATED IN MANUFACTURERS CONTRACT.
2. UNIT MUST BE INSTALLED ON LEVEL BASE. MANUFACTURER RECOMMENDS A MINIMUM 6" LEVEL ROCK BASE UNLESS SPECIFIED BY THE PROJECT ENGINEER. CONTRACTOR IS RESPONSIBLE TO VERIFY PROJECT ENGINEERS RECOMMENDED BASE SPECIFICATIONS.
3. ALL PIPES MUST BE FLUSH WITH INSIDE SURFACE OF CONCRETE. (PIPES CANNOT INTRUDE BEYOND FLUSH). INVERT OF OUTFLOW PIPE MUST BE FLUSH WITH DISCHARGE CHAMBER FLOOR. ALL GAPS AROUND PIPES SHALL BE SEALED WATER TIGHT WITH A NON-SHRINK GROUT PER MANUFACTURERS STANDARD CONNECTION DETAIL AND SHALL MEET OR EXCEED REGIONAL PIPE CONNECTION STANDARDS.
4. CONTRACTOR TO SUPPLY AND INSTALL ALL EXTERNAL CONNECTING PIPES.
5. CONTRACTOR RESPONSIBLE FOR INSTALLATION OF ALL RISERS, MANHOLES, AND HATCHES. CONTRACTOR TO GROUT ALL MANHOLES AND HATCHES TO MATCH FINISHED SURFACE UNLESS SPECIFIED OTHERWISE.
6. DRIP OR SPRAY IRRIGATION REQUIRED ON ALL UNITS WITH VEGETATION.

GENERAL NOTES

1. MANUFACTURER TO PROVIDE ALL MATERIALS UNLESS OTHERWISE NOTED.
2. ALL DIMENSIONS, ELEVATIONS, SPECIFICATIONS AND CAPACITIES ARE SUBJECT TO CHANGE. FOR PROJECT SPECIFIC DRAWINGS DETAILING EXACT DIMENSIONS, WEIGHTS AND ACCESSORIES PLEASE CONTACT MANUFACTURER.

TREATMENT FLOW (CFS)	0.462
OPERATING HEAD (FT)	3.4
PRETREATMENT LOADING RATE (GPM/SF)	TBD
WETLAND MEDIA LOADING RATE (GPM/SF)	1.0

THE PRODUCT DESCRIBED MAY BE PROTECTED BY ONE OR MORE OF THE FOLLOWING US PATENTS: 7,425,262; 7,470,362; 7,674,378; 8,303,816; RELATED FOREIGN PATENTS OR OTHER PATENTS PENDING

PROPRIETARY AND CONFIDENTIAL:

THE INFORMATION CONTAINED IN THIS DRAWING IS THE SOLE PROPERTY OF MODULAR WETLANDS SYSTEMS. ANY REPRODUCTION IN PART OR AS A WHOLE WITHOUT THE WRITTEN PERMISSION OF MODULAR WETLANDS SYSTEMS IS PROHIBITED.

MODULAR WETLANDS
www.ModularWetlands.com | (855) 5MOD-WET

MWS-L-8-16-V
STORMWATER BIOFILTRATION SYSTEM
STANDARD DETAIL

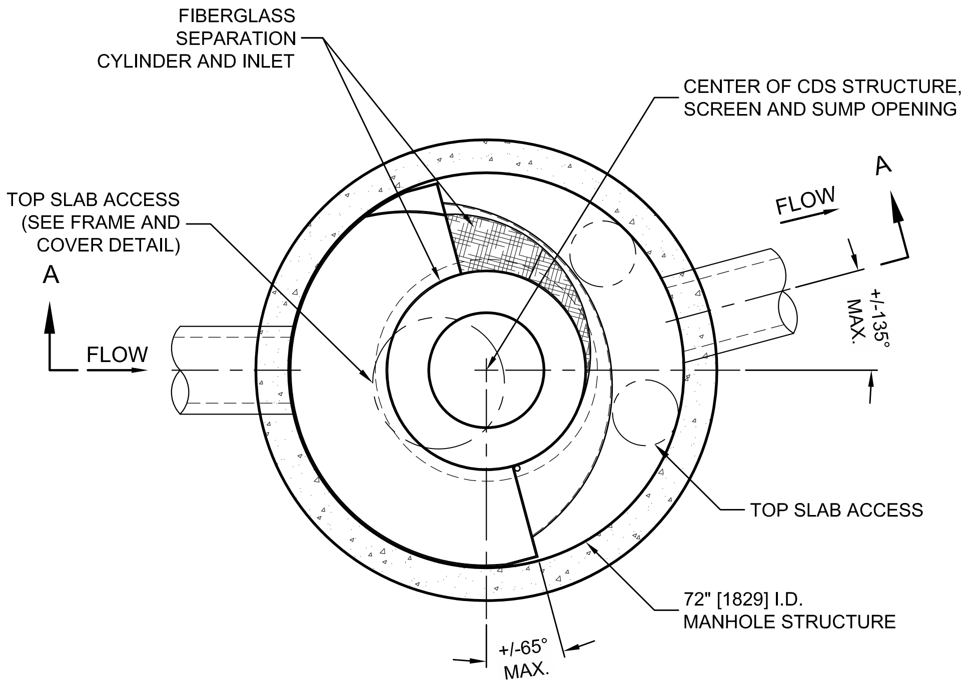

PLAN VIEW B-B

N.T.S.

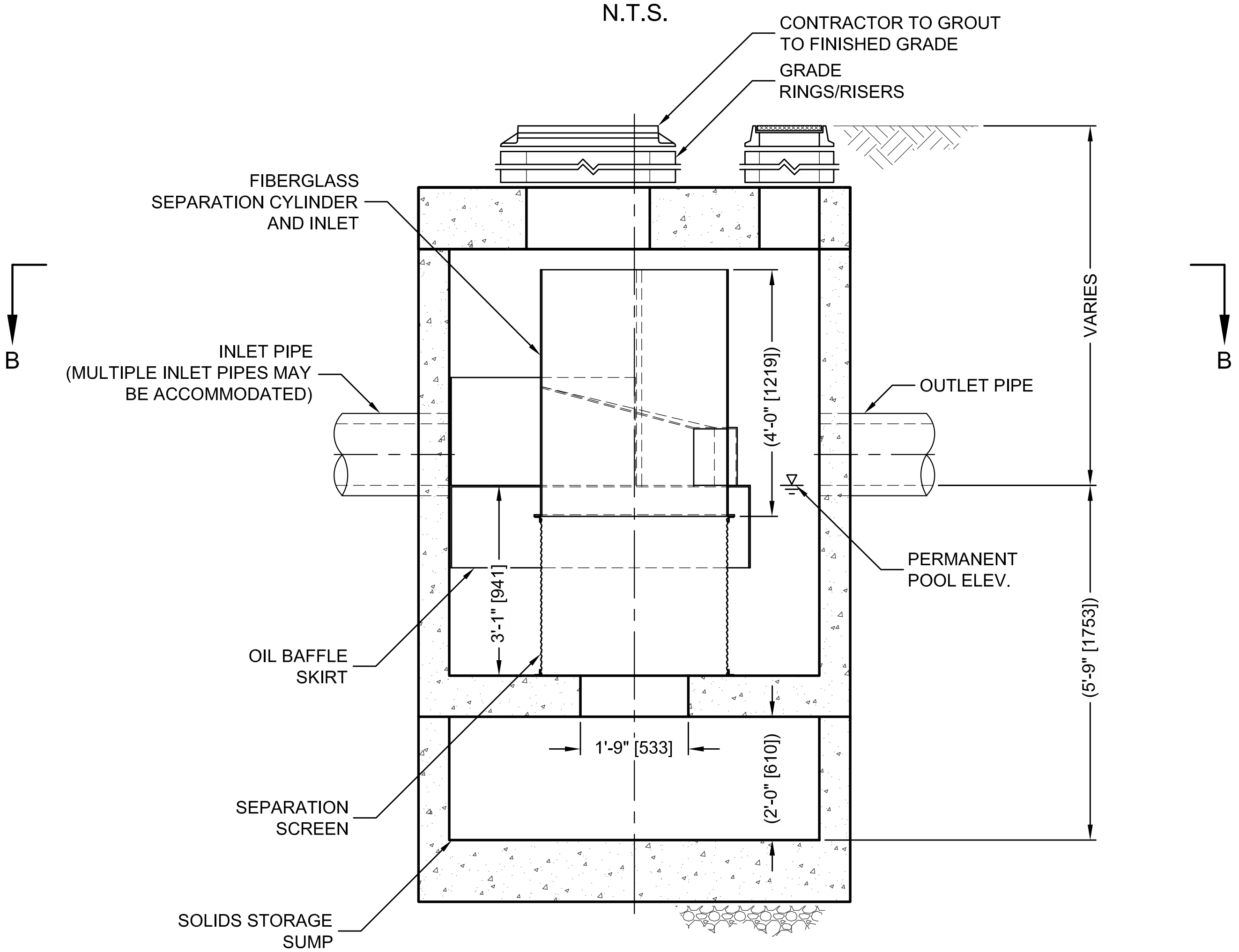

ELEVATION A-A

N.T.S.

THIS PRODUCT MAY BE PROTECTED BY ONE OR MORE OF THE FOLLOWING U.S. PATENTS: 5,788,848; 6,641,720; 6,511,595; 6,581,783; RELATED FOREIGN PATENTS, OR OTHER PATENTS PENDING.

CDS3025-6-C DESIGN NOTES

CDS3025-6-C RATED TREATMENT CAPACITY IS 2.5 CFS [70.8 L/s], OR PER LOCAL REGULATIONS. MAXIMUM HYDRAULIC INTERNAL BYPASS CAPACITY IS 20.0 CFS [566 L/s]. IF THE SITE CONDITIONS EXCEED 20.0 CFS [566 L/s], AN UPSTREAM BYPASS STRUCTURE IS REQUIRED.

THE STANDARD CDS3025-6-C CONFIGURATION IS SHOWN. ALTERNATE CONFIGURATIONS ARE AVAILABLE AND ARE LISTED BELOW. SOME CONFIGURATIONS MAY BE COMBINED TO SUIT SITE REQUIREMENTS.

CONFIGURATION DESCRIPTION BMP-4

GRATED INLET ONLY (NO INLET PIPE)
GRATED INLET WITH INLET PIPE OR PIPES
CURB INLET ONLY (NO INLET PIPE)
CURB INLET WITH INLET PIPE OR PIPES
SEPARATE OIL BAFFLE (SINGLE INLET PIPE REQUIRED FOR THIS CONFIGURATION)
SEDIMENT WEIR FOR NJDEP / NJCAT CONFORMING UNITS

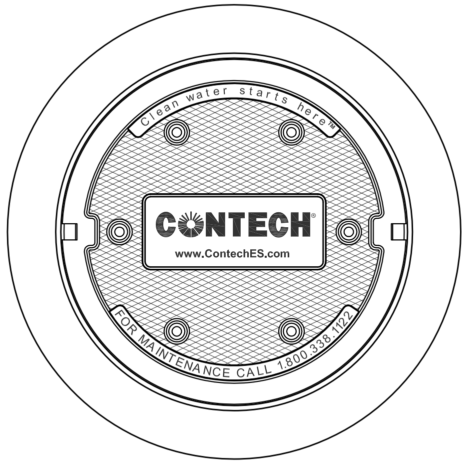

FRAME AND COVER

(DIAMETER VARIES)
N.T.S.

SITE SPECIFIC DATA REQUIREMENTS

STRUCTURE ID			
WATER QUALITY FLOW RATE (CFS OR L/s)	*		
PEAK FLOW RATE (CFS OR L/s)	*		
RETURN PERIOD OF PEAK FLOW (YRS)	*		
SCREEN APERTURE (2400 OR 4700)	*		

PIPE DATA:	I.E.	MATERIAL	DIAMETER
INLET PIPE 1	*	*	*
INLET PIPE 2	*	*	*
OUTLET PIPE	*	*	*

RIM ELEVATION	*

ANTI-FLOTATION BALLAST	WIDTH	HEIGHT
	*	*

NOTES/SPECIAL REQUIREMENTS:

* PER ENGINEER OF RECORD

GENERAL NOTES

1. CONTECH TO PROVIDE ALL MATERIALS UNLESS NOTED OTHERWISE.
2. DIMENSIONS MARKED WITH ( ) ARE REFERENCE DIMENSIONS. ACTUAL DIMENSIONS MAY VARY.
3. FOR FABRICATION DRAWINGS WITH DETAILED STRUCTURE DIMENSIONS AND WEIGHTS, PLEASE CONTACT YOUR CONTECH ENGINEERED SOLUTIONS LLC REPRESENTATIVE. www.ContechES.com
4. CDS WATER QUALITY STRUCTURE SHALL BE IN ACCORDANCE WITH ALL DESIGN DATA AND INFORMATION CONTAINED IN THIS DRAWING.
5. STRUCTURE SHALL MEET AASHTO HS20 AND CASTINGS SHALL MEET HS20 (AASHTO M 306) LOAD RATING, ASSUMING GROUNDWATER ELEVATION AT, OR BELOW, THE OUTLET PIPE INVERT ELEVATION. ENGINEER OF RECORD TO CONFIRM ACTUAL GROUNDWATER ELEVATION.
6. PVC HYDRAULIC SHEAR PLATE IS PLACED ON SHELF AT BOTTOM OF SCREEN CYLINDER. REMOVE AND REPLACE AS NECESSARY DURING MAINTENANCE CLEANING.

INSTALLATION NOTES

A. ANY SUB-BASE, BACKFILL DEPTH, AND/OR ANTI-FLOTATION PROVISIONS ARE SITE-SPECIFIC DESIGN CONSIDERATIONS AND SHALL BE SPECIFIED BY ENGINEER OF RECORD.
B. CONTRACTOR TO PROVIDE EQUIPMENT WITH SUFFICIENT LIFTING AND REACH CAPACITY TO LIFT AND SET THE CDS MANHOLE STRUCTURE (LIFTING CLUTCHES PROVIDED).
C. CONTRACTOR TO ADD JOINT SEALANT BETWEEN ALL STRUCTURE SECTIONS, AND ASSEMBLE STRUCTURE.
D. CONTRACTOR TO PROVIDE, INSTALL, AND GROUT PIPES. MATCH PIPE INVERTS WITH ELEVATIONS SHOWN.
E. CONTRACTOR TO TAKE APPROPRIATE MEASURES TO ASSURE UNIT IS WATER TIGHT, HOLDING WATER TO FLOWLINE INVERT MINIMUM. IT IS SUGGESTED THAT ALL JOINTS BELOW PIPE INVERTS ARE GROUTED.

CONTECH®
ENGINEERED SOLUTIONS LLC
www.ContechES.com
9025 Centre Pointe Dr., Suite 400, West Chester, OH 45069
800-338-1122 513-645-7000 513-645-7993 FAX

CDS3025-6-C
INLINE CDS
STANDARD DETAIL

I:\STORMWATER\COMMOPS\22 CDS\40 STANDARD DRAWINGS\INLINE (CDS-C)\DWG\CDS3025-6-C-DTL.DWG 5/13/2014 6:03 PM

SITE SPECIFIC DATA

PROJECT NAME	South Otay Mesa		
PROJECT LOCATION	San Diego, CA		
STRUCTURE ID	BMP 1		
TREATMENT REQUIRED			
VOLUME BASED (CF)		FLOW BASED (CFS)	
5,072			
TREATMENT HGL AVAILABLE (FT)			
PEAK BYPASS REQUIRED (CFS) – IF APPLICABLE			
PIPE DATA	I.E.	MATERIAL	DIAMETER
INLET PIPE 1			
INLET PIPE 2			
OUTLET PIPE			
	PRETREATMENT	BIOFILTRATION	DISCHARGE
RIM ELEVATION			
SURFACE LOAD	PARKWAY	OPEN PLANTER	PARKWAY
FRAME & COVER	ø30"	N/A	ø24"
WETLANDMEDIA VOLUME (CY)			4.30
WETLANDMEDIA DELIVERY METHOD			TBD
ORIFICE SIZE (DIA. INCHES)			ø1.89"
MAXIMUM PICK WEIGHT (LBS)			31000
NOTES:			

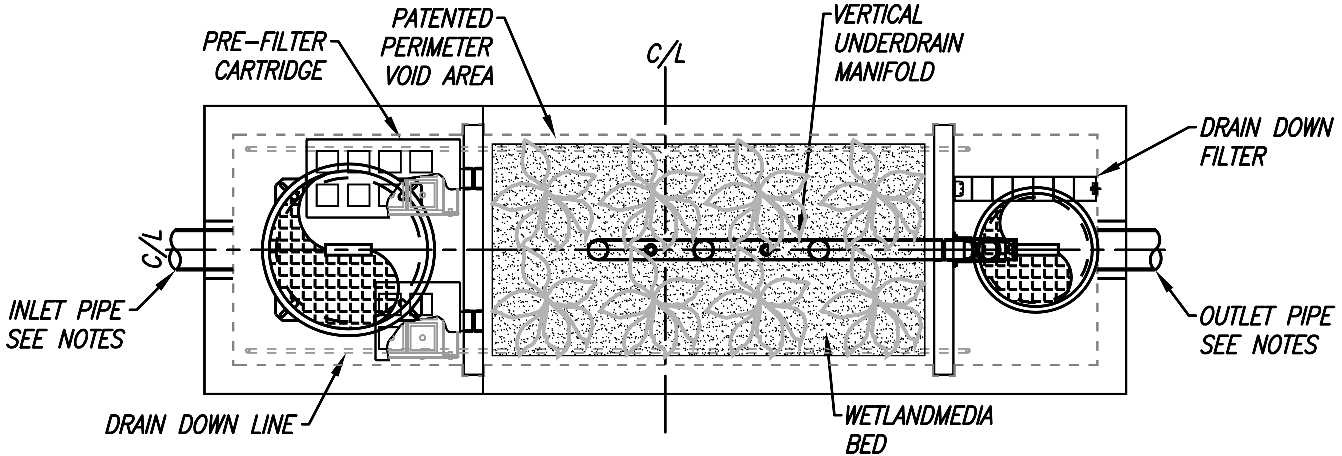

PLAN VIEW

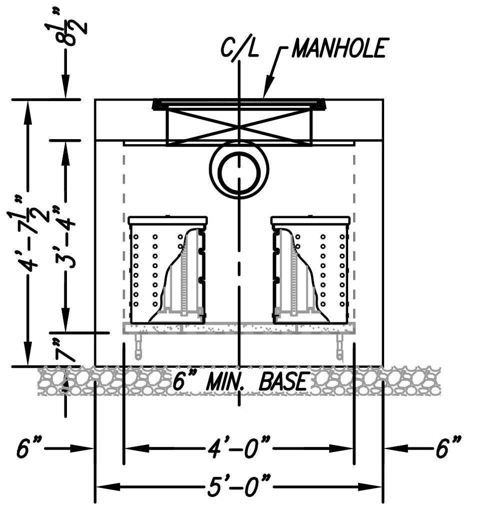

LEFT END VIEW

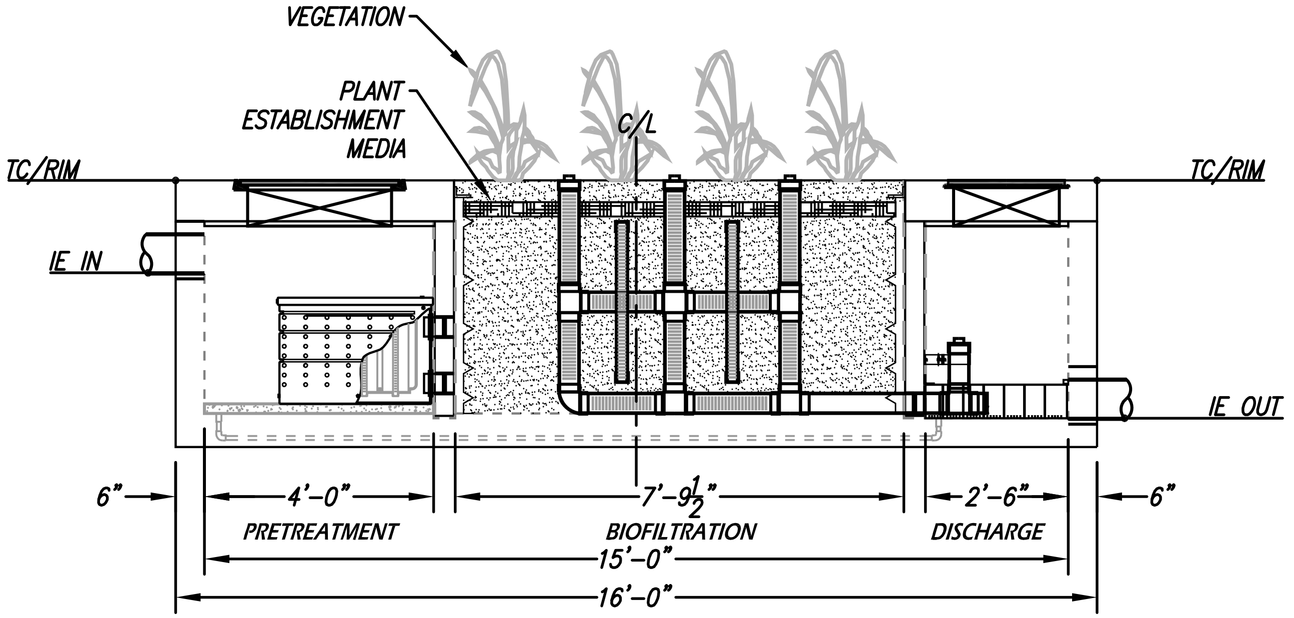

ELEVATION VIEW

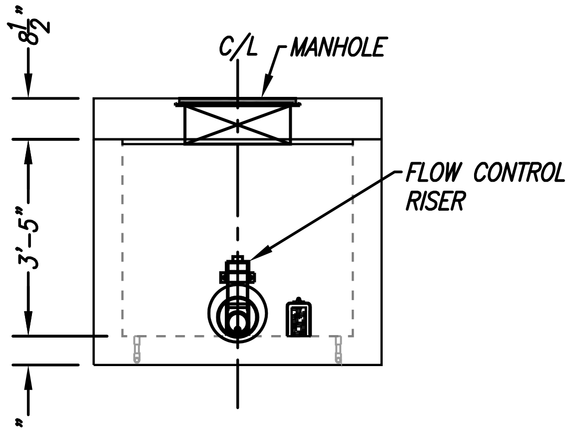

RIGHT END VIEW

INSTALLATION NOTES

1. CONTRACTOR TO PROVIDE ALL LABOR, EQUIPMENT, MATERIALS AND INCIDENTALS REQUIRED TO OFFLOAD AND INSTALL THE SYSTEM AND APPURTENANCES IN ACCORDANCE WITH THIS DRAWING AND THE MANUFACTURERS SPECIFICATIONS, UNLESS OTHERWISE STATED IN MANUFACTURERS CONTRACT.
2. UNIT MUST BE INSTALLED ON LEVEL BASE. MANUFACTURER RECOMMENDS A MINIMUM 6" LEVEL ROCK BASE UNLESS SPECIFIED BY THE PROJECT ENGINEER. CONTRACTOR IS RESPONSIBLE TO VERIFY PROJECT ENGINEERS RECOMMENDED BASE SPECIFICATIONS.
3. ALL PIPES MUST BE FLUSH WITH INSIDE SURFACE OF CONCRETE. (PIPES CANNOT INTRUDE BEYOND FLUSH). INVERT OF OUTFLOW PIPE MUST BE FLUSH WITH DISCHARGE CHAMBER FLOOR. ALL GAPS AROUND PIPES SHALL BE SEALED WATER TIGHT WITH A NON-SHRINK GROUT PER MANUFACTURERS STANDARD CONNECTION DETAIL AND SHALL MEET OR EXCEED REGIONAL PIPE CONNECTION STANDARDS.
4. CONTRACTOR TO SUPPLY AND INSTALL ALL EXTERNAL CONNECTING PIPES.
5. CONTRACTOR RESPONSIBLE FOR INSTALLATION OF ALL RISERS, MANHOLES, AND HATCHES. CONTRACTOR TO GROUT ALL MANHOLES AND HATCHES TO MATCH FINISHED SURFACE UNLESS SPECIFIED OTHERWISE.
6. DRIP OR SPRAY IRRIGATION REQUIRED ON ALL UNITS WITH VEGETATION.

GENERAL NOTES

1. MANUFACTURER TO PROVIDE ALL MATERIALS UNLESS OTHERWISE NOTED.
2. ALL DIMENSIONS, ELEVATIONS, SPECIFICATIONS AND CAPACITIES ARE SUBJECT TO CHANGE. FOR PROJECT SPECIFIC DRAWINGS DETAILING EXACT DIMENSIONS, WEIGHTS AND ACCESSORIES PLEASE CONTACT MANUFACTURER.

TREATMENT FLOW (CFS)	0.175
OPERATING HEAD (FT)	3.4
PRETREATMENT LOADING RATE (GPM/SF)	TBD
WETLAND MEDIA LOADING RATE (GPM/SF)	1.0

THE PRODUCT DESCRIBED MAY BE PROTECTED BY ONE OR MORE OF THE FOLLOWING US PATENTS: 7,425,262; 7,470,362; 7,674,378; 8,303,816; RELATED FOREIGN PATENTS OR OTHER PATENTS PENDING

MODULAR WETLANDS
www.ModularWetlands.com | (855) 5MOD-WET

MWS-L-4-15-V
STORMWATER BIOFILTRATION SYSTEM
STANDARD DETAIL

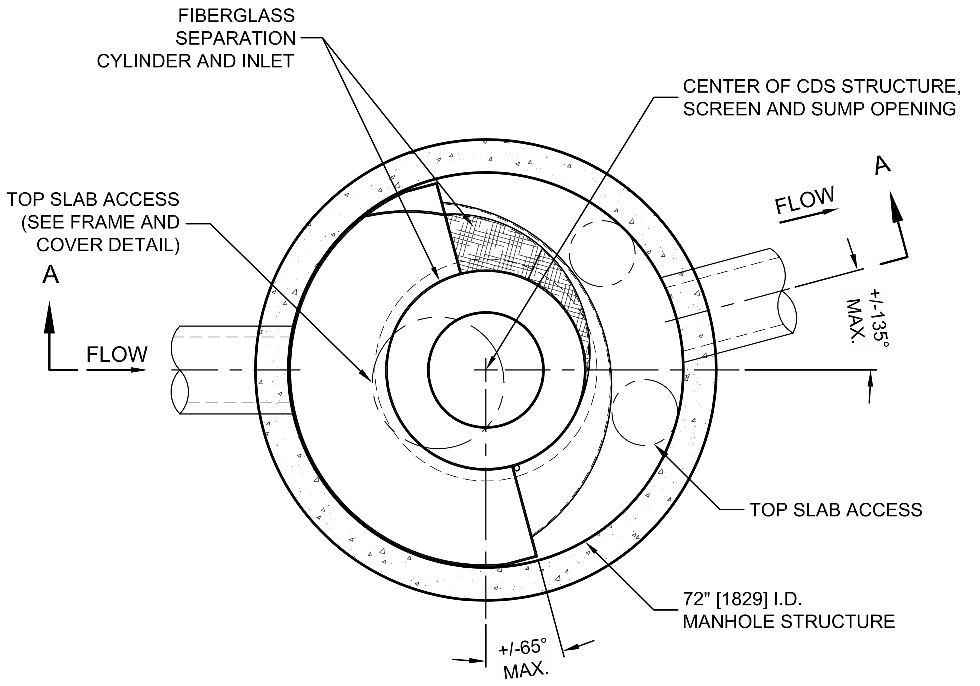

PLAN VIEW B-B
N.T.S.

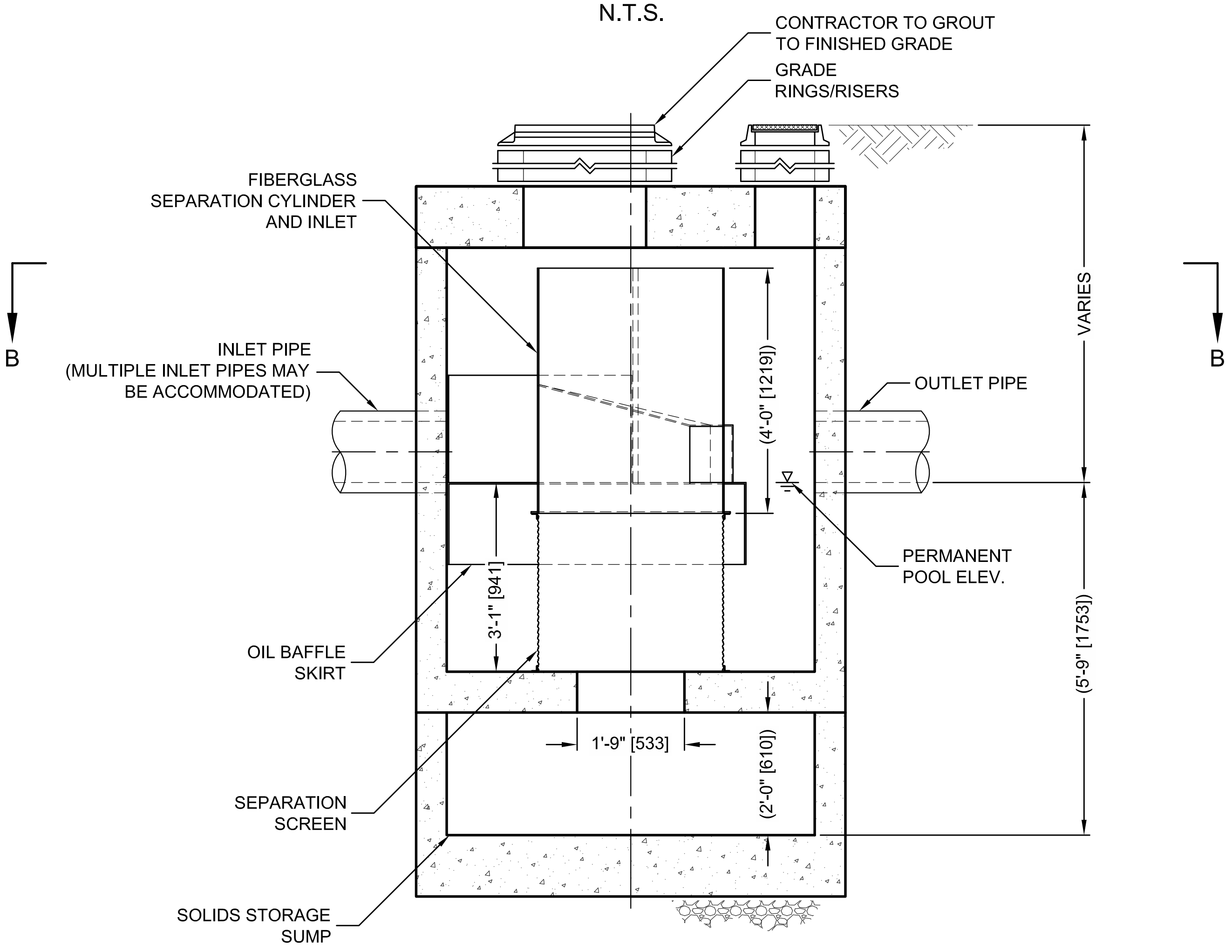

ELEVATION A-A
N.T.S.

THIS PRODUCT MAY BE PROTECTED BY ONE OR MORE OF THE FOLLOWING U.S. PATENTS: 5,788,848; 6,641,720; 6,511,595; 6,581,783; RELATED FOREIGN PATENTS, OR OTHER PATENTS PENDING.

CDS3025-6-C DESIGN NOTES

CDS3025-6-C RATED TREATMENT CAPACITY IS 2.5 CFS [70.8 L/s], OR PER LOCAL REGULATIONS. MAXIMUM HYDRAULIC INTERNAL BYPASS CAPACITY IS 20.0 CFS [566 L/s]. IF THE SITE CONDITIONS EXCEED 20.0 CFS [566 L/s], AN UPSTREAM BYPASS STRUCTURE IS REQUIRED.

THE STANDARD CDS3025-6-C CONFIGURATION IS SHOWN. ALTERNATE CONFIGURATIONS ARE AVAILABLE AND ARE LISTED BELOW. SOME CONFIGURATIONS MAY BE COMBINED TO SUIT SITE REQUIREMENTS.

CONFIGURATION DESCRIPTION BMP-4

GRATED INLET ONLY (NO INLET PIPE)
GRATED INLET WITH INLET PIPE OR PIPES
CURB INLET ONLY (NO INLET PIPE)
CURB INLET WITH INLET PIPE OR PIPES
SEPARATE OIL BAFFLE (SINGLE INLET PIPE REQUIRED FOR THIS CONFIGURATION)
SEDIMENT WEIR FOR NJDEP / NJCAT CONFORMING UNITS

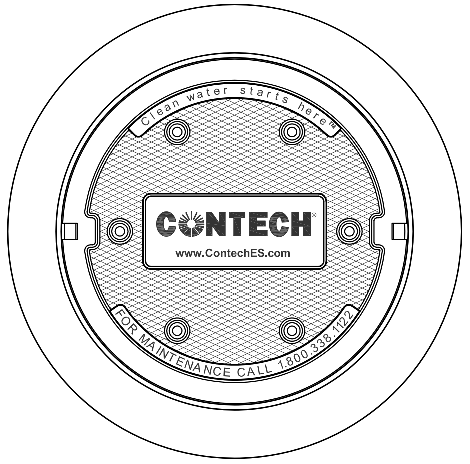

FRAME AND COVER
(DIAMETER VARIES)
N.T.S.

SITE SPECIFIC DATA REQUIREMENTS

STRUCTURE ID	
WATER QUALITY FLOW RATE (CFS OR L/s)	*
PEAK FLOW RATE (CFS OR L/s)	*
RETURN PERIOD OF PEAK FLOW (YRS)	*
SCREEN APERTURE (2400 OR 4700)	*

PIPE DATA:	I.E.	MATERIAL	DIAMETER
INLET PIPE 1	*	*	*
INLET PIPE 2	*	*	*
OUTLET PIPE	*	*	*

RIM ELEVATION	*

ANTI-FLOTATION BALLAST	WIDTH	HEIGHT
	*	*

NOTES/SPECIAL REQUIREMENTS:

* PER ENGINEER OF RECORD

GENERAL NOTES

1. CONTECH TO PROVIDE ALL MATERIALS UNLESS NOTED OTHERWISE.
2. DIMENSIONS MARKED WITH ( ) ARE REFERENCE DIMENSIONS. ACTUAL DIMENSIONS MAY VARY.
3. FOR FABRICATION DRAWINGS WITH DETAILED STRUCTURE DIMENSIONS AND WEIGHTS, PLEASE CONTACT YOUR CONTECH ENGINEERED SOLUTIONS LLC REPRESENTATIVE. www.ContechES.com
4. CDS WATER QUALITY STRUCTURE SHALL BE IN ACCORDANCE WITH ALL DESIGN DATA AND INFORMATION CONTAINED IN THIS DRAWING.
5. STRUCTURE SHALL MEET AASHTO HS20 AND CASTINGS SHALL MEET HS20 (AASHTO M 306) LOAD RATING, ASSUMING GROUNDWATER ELEVATION AT, OR BELOW, THE OUTLET PIPE INVERT ELEVATION. ENGINEER OF RECORD TO CONFIRM ACTUAL GROUNDWATER ELEVATION.
6. PVC HYDRAULIC SHEAR PLATE IS PLACED ON SHELF AT BOTTOM OF SCREEN CYLINDER. REMOVE AND REPLACE AS NECESSARY DURING MAINTENANCE CLEANING.

INSTALLATION NOTES

A. ANY SUB-BASE, BACKFILL DEPTH, AND/OR ANTI-FLOTATION PROVISIONS ARE SITE-SPECIFIC DESIGN CONSIDERATIONS AND SHALL BE SPECIFIED BY ENGINEER OF RECORD.
B. CONTRACTOR TO PROVIDE EQUIPMENT WITH SUFFICIENT LIFTING AND REACH CAPACITY TO LIFT AND SET THE CDS MANHOLE STRUCTURE (LIFTING CLUTCHES PROVIDED).
C. CONTRACTOR TO ADD JOINT SEALANT BETWEEN ALL STRUCTURE SECTIONS, AND ASSEMBLE STRUCTURE.
D. CONTRACTOR TO PROVIDE, INSTALL, AND GROUT PIPES. MATCH PIPE INVERTS WITH ELEVATIONS SHOWN.
E. CONTRACTOR TO TAKE APPROPRIATE MEASURES TO ASSURE UNIT IS WATER TIGHT, HOLDING WATER TO FLOWLINE INVERT MINIMUM. IT IS SUGGESTED THAT ALL JOINTS BELOW PIPE INVERTS ARE GROUTED.

CONTECH®
ENGINEERED SOLUTIONS LLC
www.ContechES.com
9025 Centre Pointe Dr., Suite 400, West Chester, OH 45069
800-338-1122 513-645-7000 513-645-7993 FAX

CDS3025-6-C
INLINE CDS
STANDARD DETAIL

I:\STORMWATER\COMMOPS\22 CDS\40 STANDARD DRAWINGS\INLINE (CDS-C)\DWG\CDS3025-6-C-DTL.DWG 5/13/2014 6:03 PM

SITE SPECIFIC DATA

PROJECT NAME		South Otay Mesa	
PROJECT LOCATION		San Diego, CA	
STRUCTURE ID		BMP 1	
TREATMENT REQUIRED			
VOLUME BASED (CF)		FLOW BASED (CFS)	
5,072			
TREATMENT HGL AVAILABLE (FT)			
PEAK BYPASS REQUIRED (CFS) – IF APPLICABLE			
PIPE DATA	I.E.	MATERIAL	DIAMETER
INLET PIPE 1			
INLET PIPE 2			
OUTLET PIPE			
	PRETREATMENT	BIOFILTRATION	DISCHARGE
RIM ELEVATION			
SURFACE LOAD	PARKWAY	OPEN PLANTER	PARKWAY
FRAME & COVER	ø30"	N/A	ø24"
WETLANDMEDIA VOLUME (CY)			7.63
WETLANDMEDIA DELIVERY METHOD			TBD
ORIFICE SIZE (DIA. INCHES)			ø2.34"
MAXIMUM PICK WEIGHT (LBS)			43000
NOTES:			

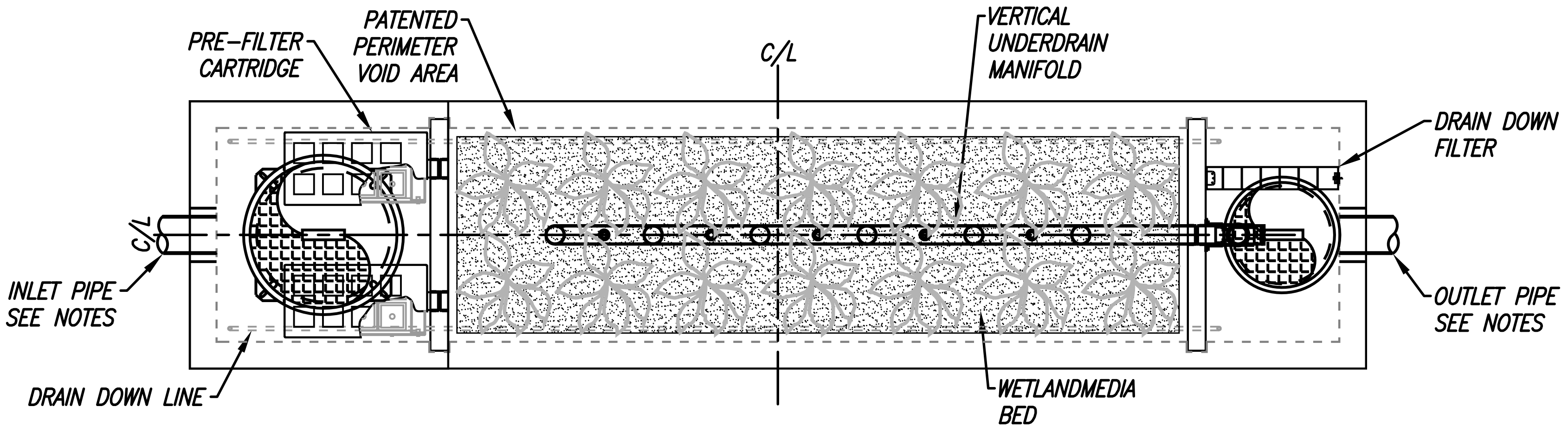

PLAN VIEW

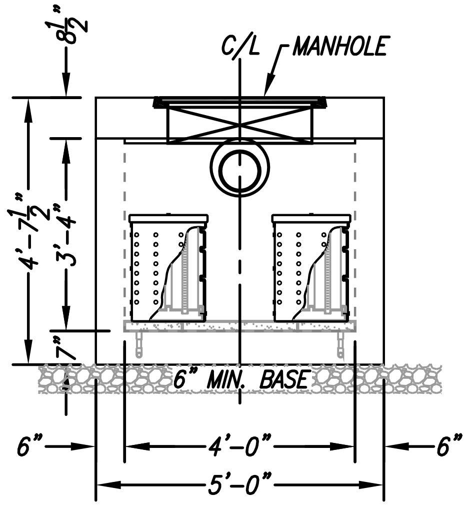

LEFT END VIEW

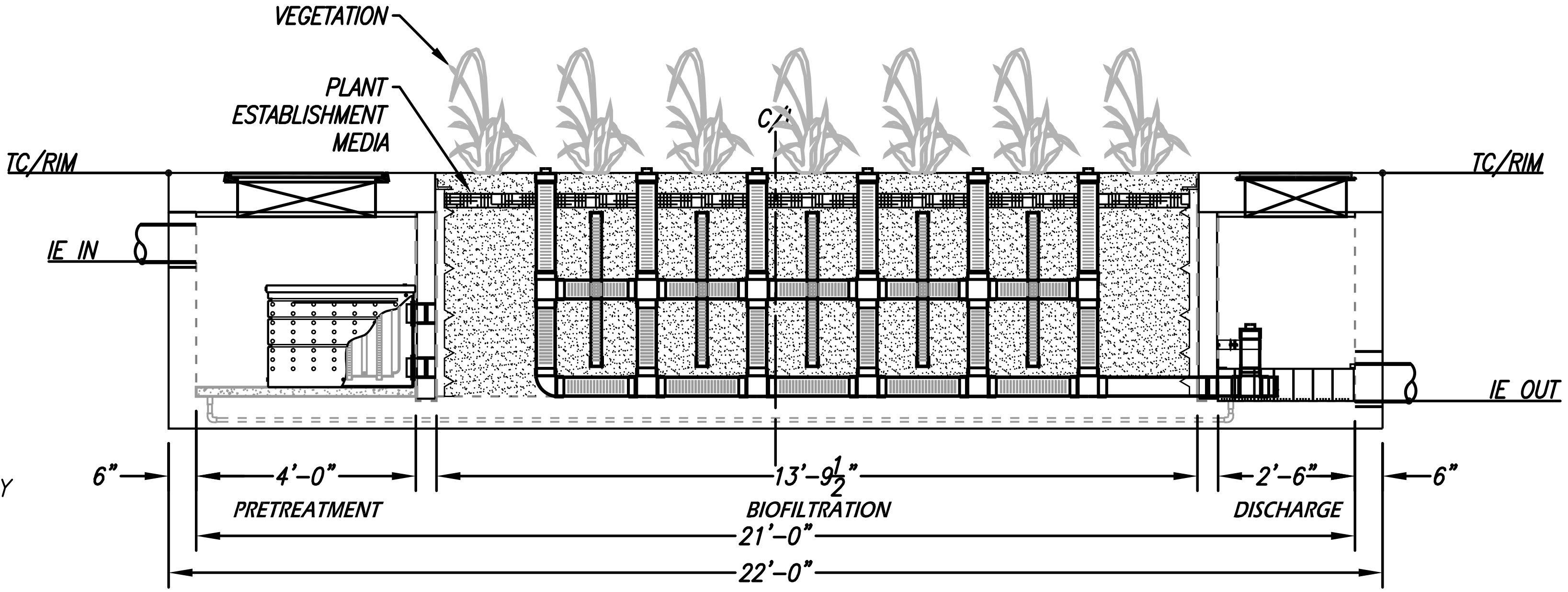

ELEVATION VIEW

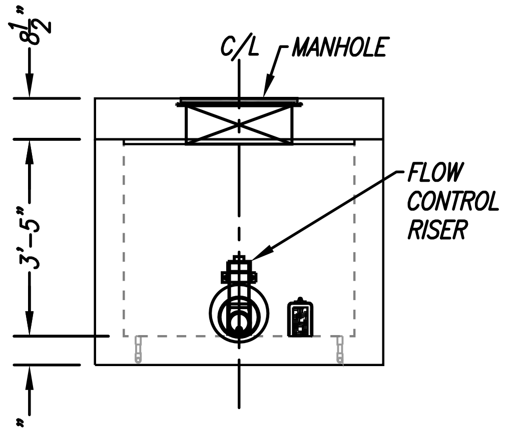

RIGHT END VIEW

INSTALLATION NOTES

1. CONTRACTOR TO PROVIDE ALL LABOR, EQUIPMENT, MATERIALS AND INCIDENTALS REQUIRED TO OFFLOAD AND INSTALL THE SYSTEM AND APPURTENANCES IN ACCORDANCE WITH THIS DRAWING AND THE MANUFACTURERS SPECIFICATIONS, UNLESS OTHERWISE STATED IN MANUFACTURERS CONTRACT.
2. UNIT MUST BE INSTALLED ON LEVEL BASE. MANUFACTURER RECOMMENDS A MINIMUM 6" LEVEL ROCK BASE UNLESS SPECIFIED BY THE PROJECT ENGINEER. CONTRACTOR IS RESPONSIBLE TO VERIFY PROJECT ENGINEERS RECOMMENDED BASE SPECIFICATIONS.
3. ALL PIPES MUST BE FLUSH WITH INSIDE SURFACE OF CONCRETE. (PIPES CANNOT INTRUDE BEYOND FLUSH). INVERT OF OUTFLOW PIPE MUST BE FLUSH WITH DISCHARGE CHAMBER FLOOR. ALL GAPS AROUND PIPES SHALL BE SEALED WATER TIGHT WITH A NON-SHRINK GROUT PER MANUFACTURERS STANDARD CONNECTION DETAIL AND SHALL MEET OR EXCEED REGIONAL PIPE CONNECTION STANDARDS.
4. CONTRACTOR TO SUPPLY AND INSTALL ALL EXTERNAL CONNECTING PIPES.
5. CONTRACTOR RESPONSIBLE FOR INSTALLATION OF ALL RISERS, MANHOLES, AND HATCHES. CONTRACTOR TO GROUT ALL MANHOLES AND HATCHES TO MATCH FINISHED SURFACE UNLESS SPECIFIED OTHERWISE.
6. DRIP OR SPRAY IRRIGATION REQUIRED ON ALL UNITS WITH VEGETATION.

GENERAL NOTES

1. MANUFACTURER TO PROVIDE ALL MATERIALS UNLESS OTHERWISE NOTED.
2. ALL DIMENSIONS, ELEVATIONS, SPECIFICATIONS AND CAPACITIES ARE SUBJECT TO CHANGE. FOR PROJECT SPECIFIC DRAWINGS DETAILING EXACT DIMENSIONS, WEIGHTS AND ACCESSORIES PLEASE CONTACT MANUFACTURER.

TREATMENT FLOW (CFS)	0.268
OPERATING HEAD (FT)	3.4
PRETREATMENT LOADING RATE (GPM/SF)	TBD
WETLAND MEDIA LOADING RATE (GPM/SF)	1.0

THE PRODUCT DESCRIBED MAY BE PROTECTED BY ONE OR MORE OF THE FOLLOWING US PATENTS: 7,425,262; 7,470,362; 7,674,378; 8,303,816; RELATED FOREIGN PATENTS OR OTHER PATENTS PENDING

MODULAR WETLANDS
www.ModularWetlands.com | (855) 5MOD-WET

MWS-L-4-21-V
STORMWATER BIOFILTRATION SYSTEM
STANDARD DETAIL

StormTrap®

MODULAR CONCRETE
STORMWATER MANAGEMENT

STORMTRAP

BY SIGNING THIS DOCUMENT YOU AGREE WITH THE PIPE INVERT ELEVATIONS, ACCESS OPENING SIZES AND LOCATIONS, PIPE MATERIAL, PIPE DIAMETERS, AND PIPE LOCATIONS OF THE DRAWINGS DATED 8/18/2016 IN ADDITION YOU AGREE WITH THE GENERAL LAYOUT OF THE BASIN AND BASIN HEIGHT, MIN AND MAX COVER OVERTOP THE SYSTEM, DELIVERY NOTES AND ALL SPECIFIC DESIGN ELEMENTS CONTAINED HEREIN. THE STRUCTURAL INTEGRITY OF THE SYSTEM IS THE RESPONSIBILITY OF STORMTRAP.

GENERAL CONTRACTOR: _______________________________ DATE: ___/___/_____

APPROVED: ☐ APPROVED WITH CHANGES: ☐ REJECTED: ☐

CIVIL ENGINEER: _______________________________________ DATE: ___/___/_____

APPROVED: ☐ APPROVED WITH CHANGES: ☐ REJECTED: ☐

INSTALLING CONTRACTOR: ______________________________ DATE: ___/___/_____

APPROVED: ☐ APPROVED WITH CHANGES: ☐ REJECTED: ☐

SHEET INDEX

PAGE	DESCRIPTION
0.0	COVER SHEET
1.0	DOUBLETRAP DESIGN CRITERIA
2.0	DOUBLETRAP SYSTEM LAYOUT
3.0	DOUBLETRAP INSTALLATION SPECIFICATIONS
3.1	DOUBLETRAP INSTALLATION SPECIFICATIONS
4.0	DOUBLETRAP BACKFILL SPECIFICATIONS
5.0	RECOMMENDED PIPE / ACCESS OPENING SPECIFICATIONS
6.0	SINGLETRAP MODULE TYPES

STORMTRAP CONTACT INFORMATION

STORM TRAP SUPPLIER:	STORMTRAP
CONTACT NAME:	STORMTRAP
CELL PHONE:	STORMTRAP
SALES EMAIL:	STORMTRAP

StormTrap®

PATENTS LISTED AT: [HTTP://STORMTRAP.COM/PATENT]

1287 WINDHAM PARKWAY
ROMEOVILLE, IL 60446
P:815-941-4549 / F:331-318-5347

ENGINEER INFORMATION:

PROJECT INFORMATION:

DOUBLETRAP DETENTION

ROMEOVILLE, IL

CURRENT ISSUE DATE:

ISSUED FOR:

SAMPLE PROJECT

REV.	DATE:	ISSUED FOR:	DWN BY:

SCALE:

NTS

SHEET TITLE:

COVER SHEET

SHEET NUMBER:

0.0

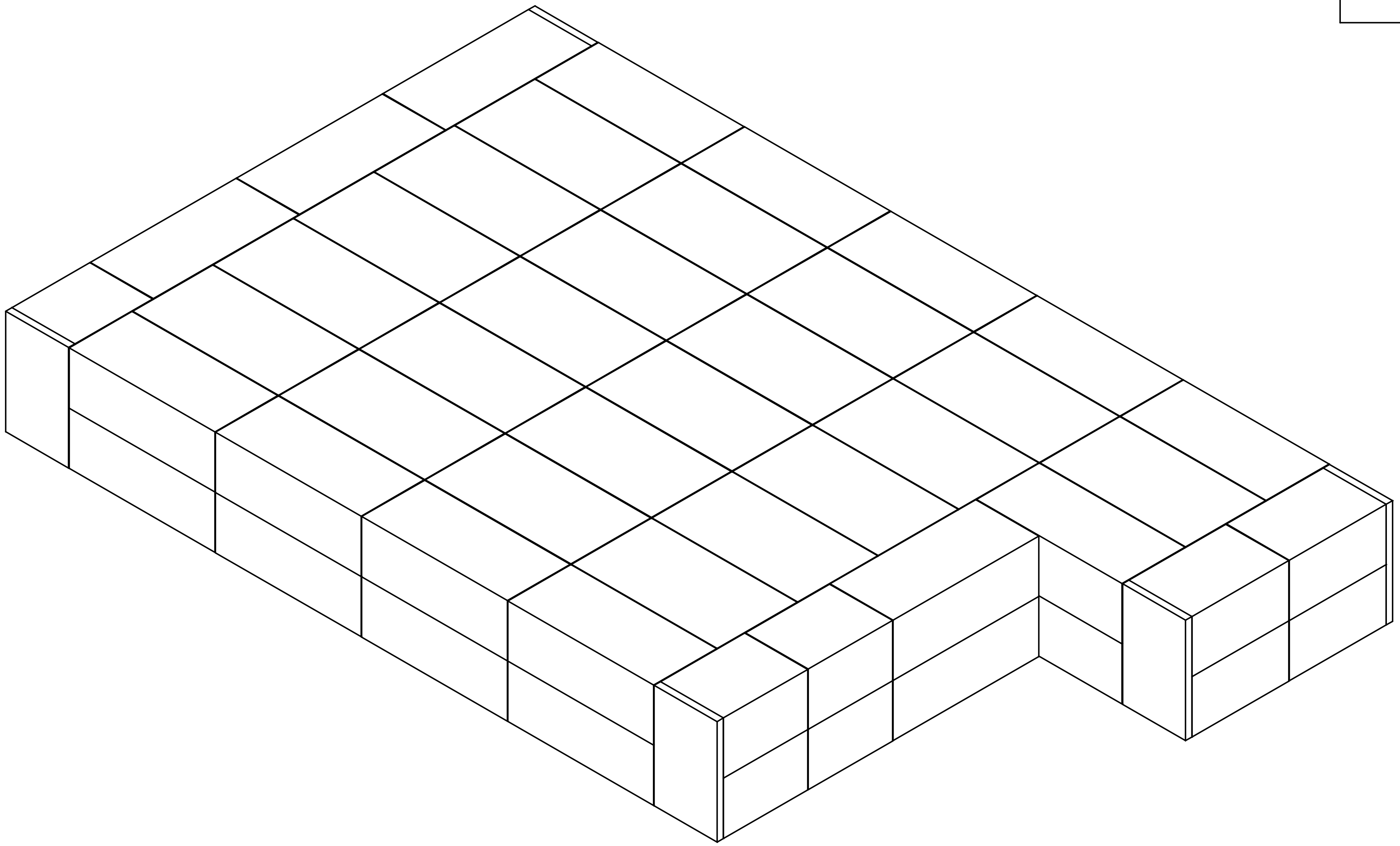

DOUBLETRAP - DETENTION
SAMPLE DRAWING

STORMTRAP SYSTEM INFORMATION

WATER STORAGE REQ'D:	40000	CUBIC FEET
WATER STORAGE PROV:	42750.76	CUBIC FEET
UNIT HEADROOM:	10'-0" DOUBLETRAP	
UNIT QUANTITY:	84	TOTAL PIECES

STORMTRAP STRUCTURAL DESIGN CRITERIA

1. STORMTRAP MODULES SHALL BE MANUFACTURED AND INSTALLED ACCORDING TO SHOP DRAWINGS APPROVED BY THE INSTALLING CONTRACTOR AND ENGINEER OF RECORD. THE SHOP DRAWINGS SHALL INDICATE SIZE AND LOCATION OF ROOF OPENINGS AND INLET/ OUTLET PIPE TYPES, SIZES, INVERT ELEVATIONS AND SIZE OF OPENINGS.
2. COVER RANGE: MIN. 1.08' MAX. 6.00' (CONSULT STORMTRAP FOR ADDITIONAL COVER OPTIONS).
3. ALL DIMENSIONS AND SOIL CONDITIONS, INCLUDING BUT NOT LIMITED TO GROUNDWATER AND SOIL BEARING CAPACITY ARE REQUIRED TO BE VERIFIED IN THE FIELD BY OTHERS PRIOR TO STORMTRAP INSTALLATION.

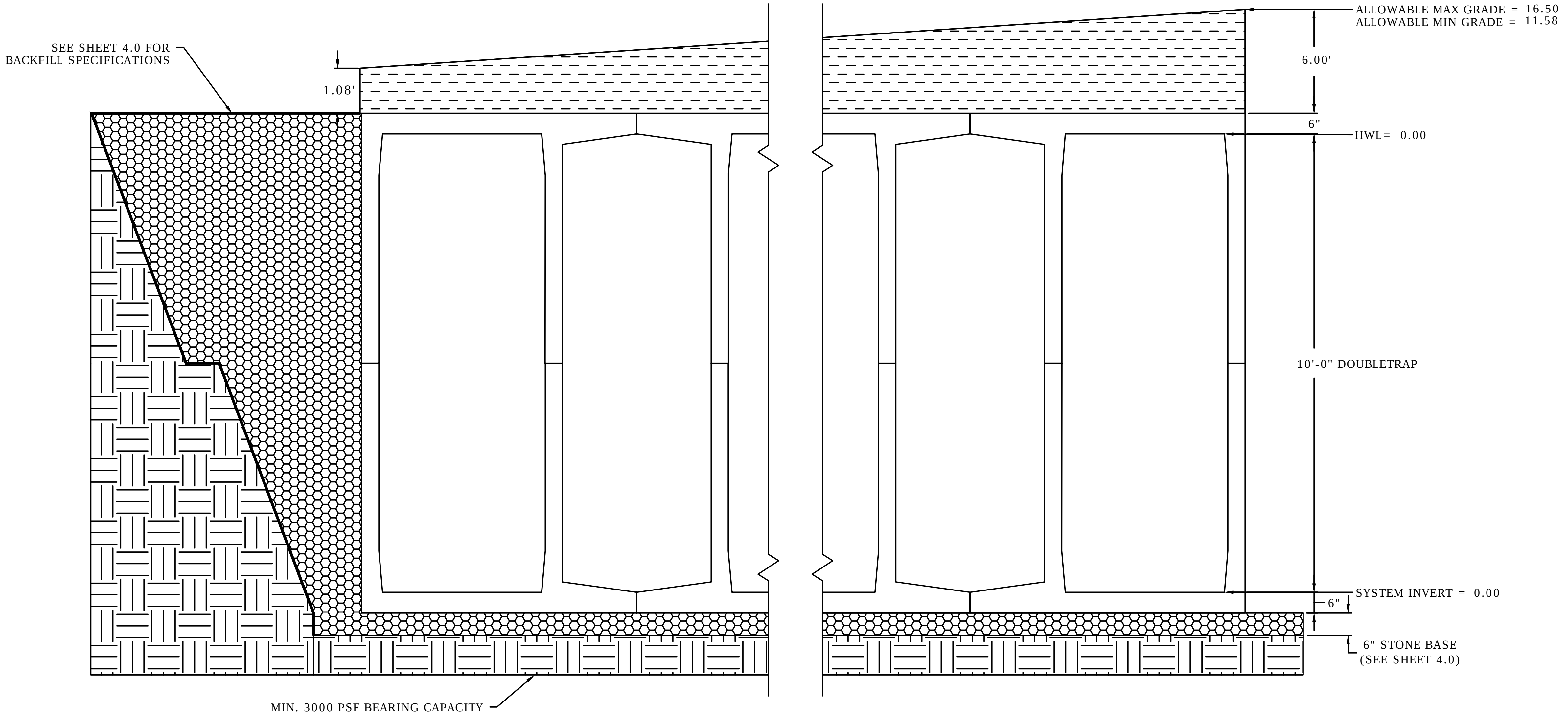

10'-0" DOUBLETRAP

StormTrap
PATENTS LISTED AT: [HTTP://STORMTRAP.COM/PATENT]
1287 WINDHAM PARKWAY
ROMEOVILLE, IL 60446
P:815-941-4549 / F:331-318-5347

ENGINEER INFORMATION:

PROJECT INFORMATION:

DOUBLETRAP DETENTION

ROMEOVILLE, IL

CURRENT ISSUE DATE:

ISSUED FOR:

SAMPLE PROJECT

REV.	DATE:	ISSUED FOR:	DWN BY:

SCALE:

NTS

SHEET TITLE:

DOUBLETRAP
DESIGN
CRITERIA

SHEET NUMBER:

1.0

BILL OF MATERIALS

QTY.	UNIT TYPE	DESCRIPTION	TOP WEIGHT	BASE WEIGHT
21	I	10'-0" DOUBLETRAP		
0	II	10'-0" DOUBLETRAP		
13	III	10'-0" DOUBLETRAP		
3	IV	10'-0" DOUBLETRAP		
0	VII	10'-0" DOUBLETRAP		
5	SPIV	10'-0" DOUBLETRAP		
5	PANEL	8" THICK PANELS		
9	JOINTWRAP	150' PER ROLL		
56	JOINTTAPE	14.5' PER ROLL		

DESIGN CRITERIA

ALLOWABLE MAX GRADE= 16.50
ALLOWABLE MIN GRADE =11.58
INSIDE HEIGHT ELEVATION =0.00
SYSTEM INVERT = 0.00
STORMTRAP VOLUME =42750.76 C.F.

NOTES:

1. DIMENSIONING OF STORMTRAP SYSTEM SHOWN BELOW ALLOW FOR A 3/4" GAP BETWEEN EACH MODULE.
2. ALL DIMENSIONS TO BE VERIFIED IN THE FIELD BY OTHERS.
3. SEE SHEET 3.0 FOR INSTALLATION SPECIFICATIONS.
4. SP - INDICATES A MODULE WITH MODIFICATIONS.
5. P - INDICATES A MODULE WITH A PANEL ATTACHMENT.
6. CONTRACTORS RESPONSIBILITY TO ENSURE CONSISTENCY/ACCURACY TO FINAL ENGINEER OF RECORD PLAN SET.

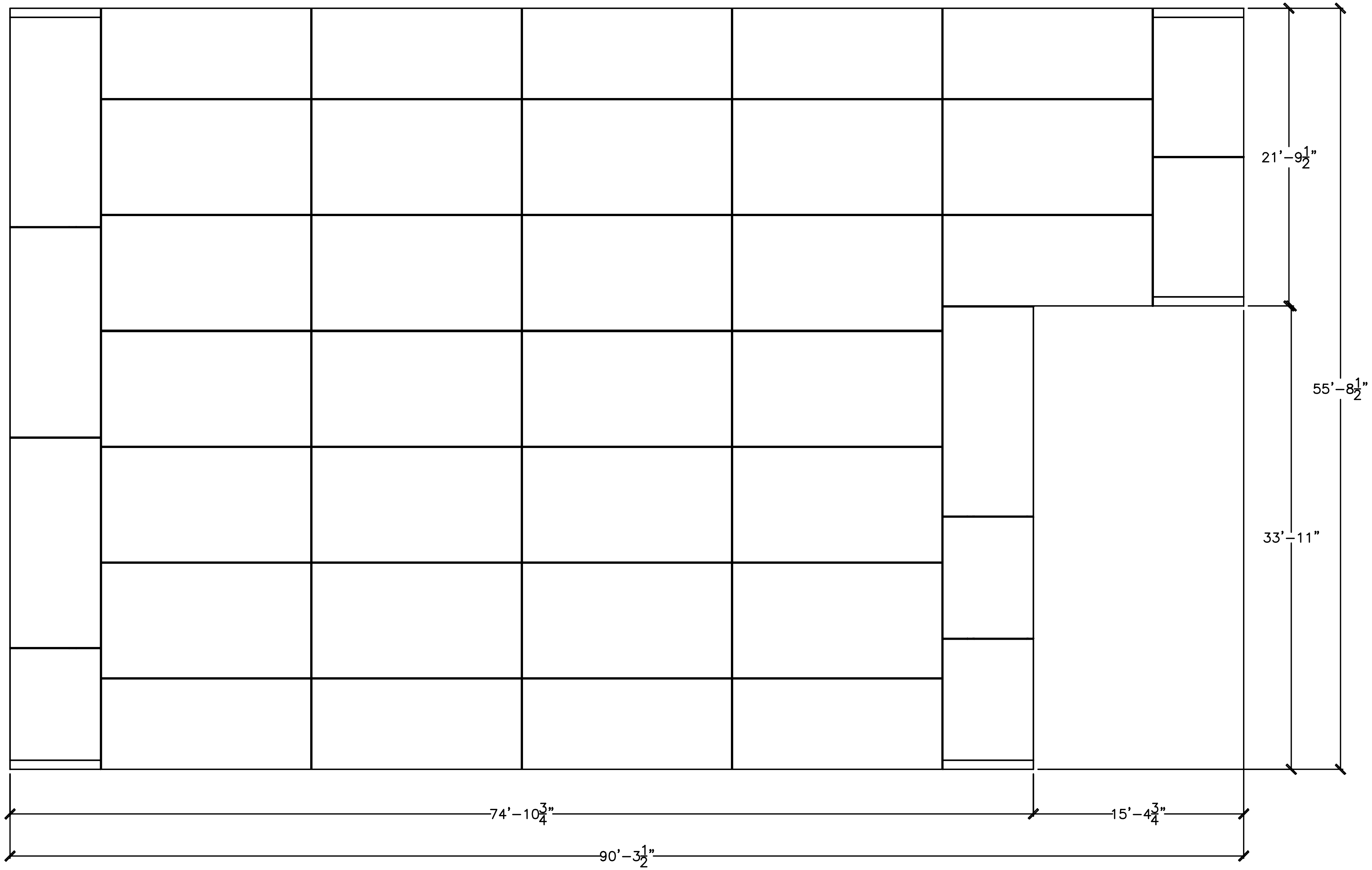

StormTrap

PATENTS LISTED AT: [HTTP://STORMTRAP.COM/PATENT]

1287 WINDHAM PARKWAY
ROMEOVILLE, IL 60446
P:815-941-4549 / F:331-318-5347

ENGINEER INFORMATION:

PROJECT INFORMATION:

DOUBLETRAP DETENTION

ROMEOVILLE, IL

CURRENT ISSUE DATE:

ISSUED FOR:

SAMPLE PROJECT

REV.	DATE:	ISSUED FOR:	DWN BY:

SCALE:

NTS

SHEET TITLE:

DOUBLETRAP
SYSTEM LAYOUT

SHEET NUMBER:

2.0

STORMTRAP INSTALLATION SPECIFICATIONS

1. STORMTRAP SHALL BE INSTALLED IN ACCORDANCE WITH ASTM C891, STANDARD FOR INSTALLATION OF UNDERGROUND PRECAST CONCRETE UTILITY STRUCTURES, THE FOLLOWING ADDITIONS AND/OR EXCEPTIONS SHALL APPLY:

2. IT IS THE RESPONSIBILITY OF THE INSTALLING CONTRACTOR TO ENSURE THAT PROPER/ADEQUATE EQUIPMENT IS USED TO SET/INSTALL THE MODULES.

3. STORMTRAP MODULES CAN BE PLACED ON A LEVEL, 6" FOUNDATION OF ¾" AGGREGATE EXTENDING 2'-0" PAST THE OUTSIDE OF THE SYSTEM (SEE DETAIL 1) AND SHALL BE PLACED ON PROPERLY COMPACTED SOILS (SEE SHEET 1.0 FOR SOIL BEARING CAPACITY REQUIREMENTS), AND IN ACCORDANCE WITH ASTM C891 STANDARD PRACTICE FOR INSTALLATION OF UNDERGROUND PRECAST UTILITY STRUCTURES.

4. THE STORMTRAP MODULES SHALL BE PLACED SUCH THAT THE MAXIMUM SPACE BETWEEN ADJACENT MODULES DOES NOT EXCEED ¾" (SEE DETAIL 2). IF THE SPACE EXCEEDS ¾", THE MODULES SHALL BE RESET WITH APPROPRIATE ADJUSTMENT MADE TO LINE AND GRADE TO BRING THE SPACE INTO SPECIFICATION.

5. STORMTRAP MODULES ARE NOT WATERTIGHT. IF A WATERTIGHT SOLUTION IS REQUIRED, CONTACT STORMTRAP FOR RECOMMENDATIONS. THE WATERTIGHT APPLICATION IS TO BE PROVIDED AND IMPLEMENTED BY THE CONTRACTOR. THE CONTRACTOR IS RESPONSIBLE TO ENSURE THAT THE SELECTED WATERTIGHT SOLUTION PERFORMS AS SPECIFIED BY THE MANUFACTURER. CONTACT STORMTRAP IF A WATERTIGHT APPLICATION IS REQUIRED.

6. THE HORIZONTAL JOINT BETWEEN THE TOP AND BASE LEG CONNECTION OF THE STORMTRAP MODULES SHALL BE SEALED WITH PREFORMED MASTIC JOINT TAPE ACCORDING TO ASTM C891, 8.8 AND 8.12. (SEE DETAIL 3). THE MASTIC JOINT TAPE DOES NOT PROVIDE A WATERTIGHT SEAL. THE SOLE PURPOSE OF THE JOINT TAPE IS TO PROVIDE A SILT AND SOIL TIGHT SYSTEM.

7. ALL EXTERIOR JOINTS BETWEEN ADJACENT STORMTRAP MODULES SHALL BE SEALED WITH 8" WIDE PRE-FORMED, COLD-APPLIED, SELF-ADHERING ELASTOMERIC RESIN, BONDED TO A WOVEN , HIGHLY PUNCTURE RESISTANT POLYMER WRAP, CONFORMING TO ASTM C891 AND SHALL BE INTEGRATED WITH PRIMER SEALANT AS APPROVED BY STORMTRAP (SEE DETAILS 3 & 4). THE JOINT WRAP DOES NOT PROVIDE A WATERTIGHT SEAL. THE SOLE PURPOSE OF THE JOINT WRAP IS TO PROVIDE A SILT AND SOIL TIGHT SYSTEM. THE ADHESIVE EXTERIOR JOINT WRAP SHALL BE INSTALLED ACCORDING TO THE FOLLOWING INSTALLATION INSTRUCTIONS:

    7.1. USE A BRUSH OR WET CLOTH TO THOROUGHLY CLEAN THE OUTSIDE SURFACE AT THE POINT WHERE JOINT WRAP IS TO BE APPLIED.

    7.2. A RELEASE PAPER PROTECTS THE ADHESIVE SIDE OF THE JOINT WRAP. PLACE THE ADHESIVE TAPE (ADHESIVE SIDE DOWN) AROUND THE STRUCTURE, REMOVING THE RELEASE PAPER AS YOU GO. PRESS THE JOINT WRAP FIRMLY AGAINST THE STORMTRAP MODULE SURFACE WHEN APPLYING.

8. IF THE CONTRACTOR NEEDS TO CANCEL ANY SHIPMENTS, THEY MUST DO SO 48 HOURS PRIOR TO THEIR SCHEDULED ARRIVAL AT THE JOB SITE. IF CANCELED AFTER THAT TIME, PLEASE CONTACT THE PROJECT MANAGER.

9. IF THE STORMTRAP MODULE(S) IS DAMAGED IN ANY WAY PRIOR, DURING, OR AFTER INSTALL, STORMTRAP MUST BE CONTACTED IMMEDIATELY TO ASSESS THE DAMAGE AND TO DETERMINE WHETHER OR NOT THE MODULE(S) WILL NEED TO BE REPLACED. IF ANY MODULE ARRIVES AT THE JOBSITE DAMAGED DO NOT UNLOAD IT; CONTACT STORMTRAP IMMEDIATELY. ANY DAMAGE NOT REPORTED BEFORE THE TRUCK IS UNLOADED WILL BE THE CONTRACTOR'S RESPONSIBILITY.

10. STORMTRAP MODULES CANNOT BE ALTERED IN ANY WAY AFTER MANUFACTURING WITHOUT WRITTEN CONSENT FROM STORMTRAP.

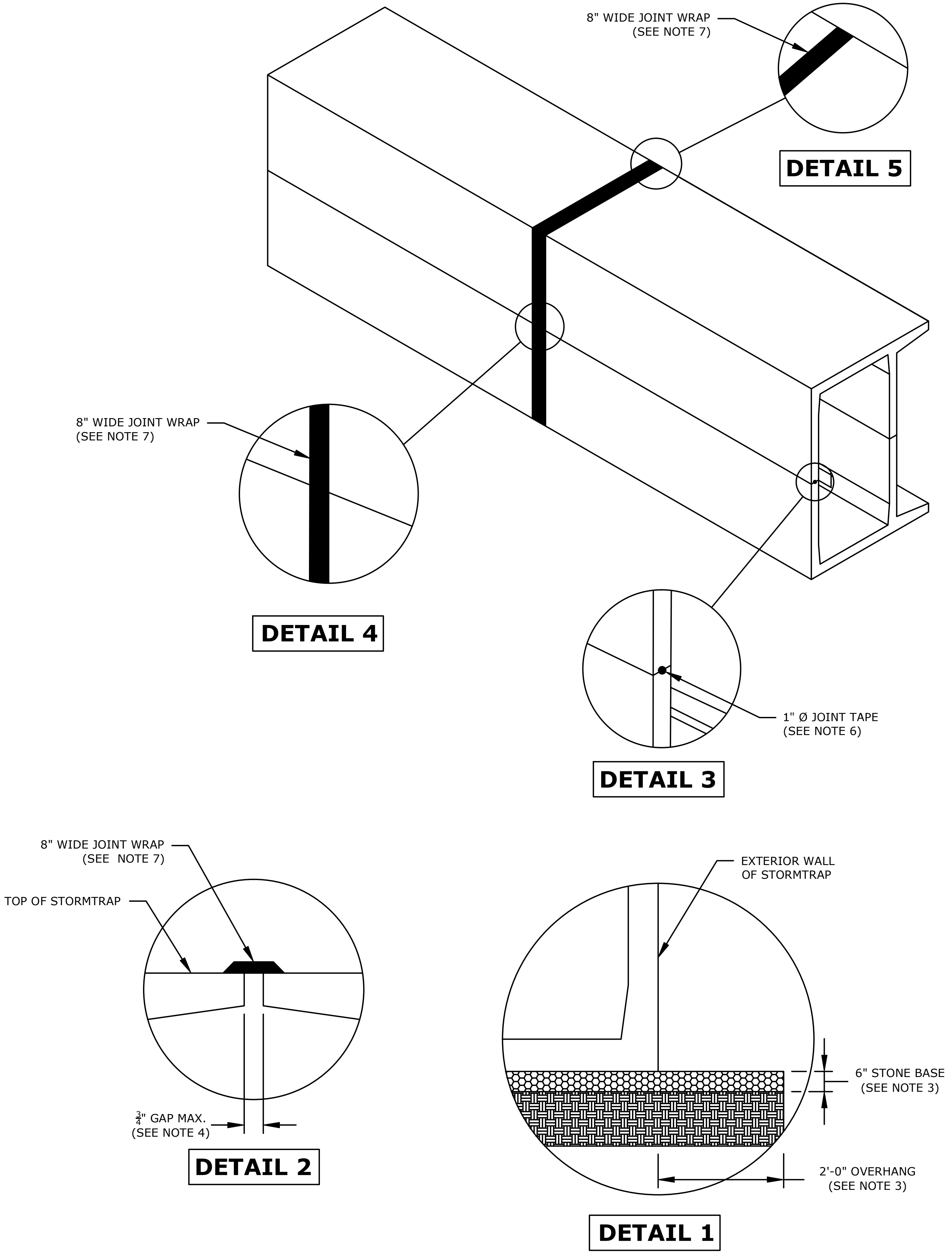

StormTrap

PATENTS LISTED AT: [HTTP://STORMTRAP.COM/PATENT]

1287 WINDHAM PARKWAY
ROMEOVILLE, IL 60446
P:815-941-4549 / F:331-318-5347

ENGINEER INFORMATION:

PROJECT INFORMATION:

DOUBLETRAP DETENTION
ROMEOVILLE, IL

CURRENT ISSUE DATE:

ISSUED FOR:

SAMPLE PROJECT

REV.	DATE:	ISSUED FOR:	DWN BY:

SCALE:

NTS

SHEET TITLE:

DOUBLETRAP INSTALLATION SPECIFICATIONS

SHEET NUMBER:

3.0

END PANEL ERECTION/INSTALLATION NOTES

1. END PANELS WILL BE SUPPLIED TO CLOSE OFF OPEN ENDS OF ROWS.
2. PANELS SHALL BE INSTALLED IN A TILT UP FASHION DIRECTLY ADJACENT TO OPEN END OF MODULE (REFER TO SHEET 2.0 FOR END PANEL LOCATIONS).
3. CONNECTION HOOKS WILL BE SUPPLIED WITH END PANELS TO SECURELY CONNECT PANEL TO ADJACENT STORMTRAP MODULE (SEE PANEL CONNECTION ELEVATION VIEW).
4. ONCE CONNECTION HOOK IS ATTACHED, LIFTING CLUTCHES MAY BE REMOVED.
5. JOINT WRAP SHALL BE PLACED AROUND PERIMETER JOINT PANEL (SEE SHEET 3.0).

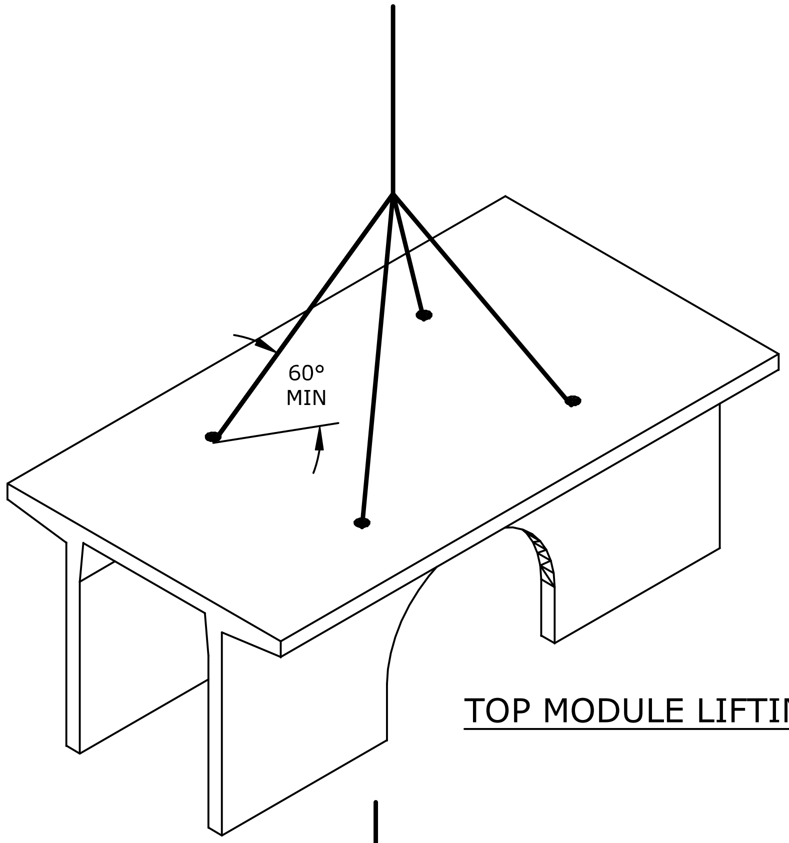

TOP MODULE LIFTING DETAIL

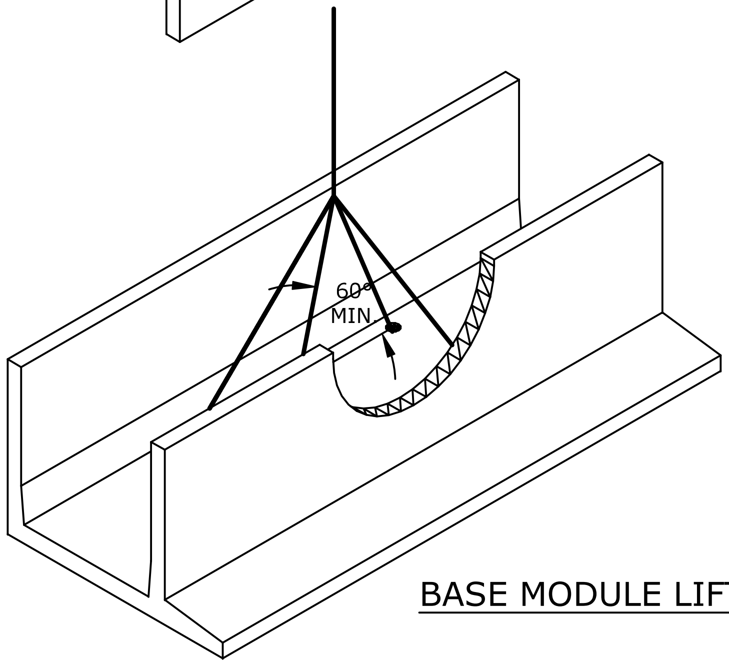

BASE MODULE LIFTING DETAIL

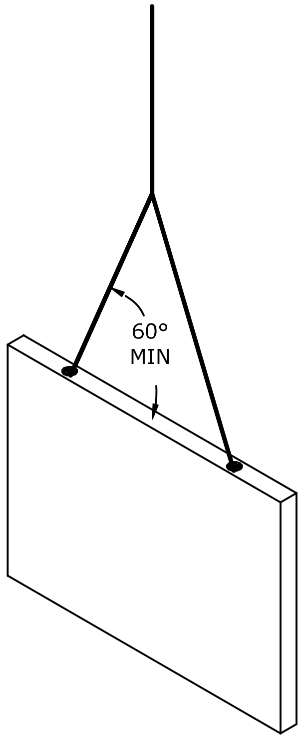

END PANEL LIFTING DETAIL

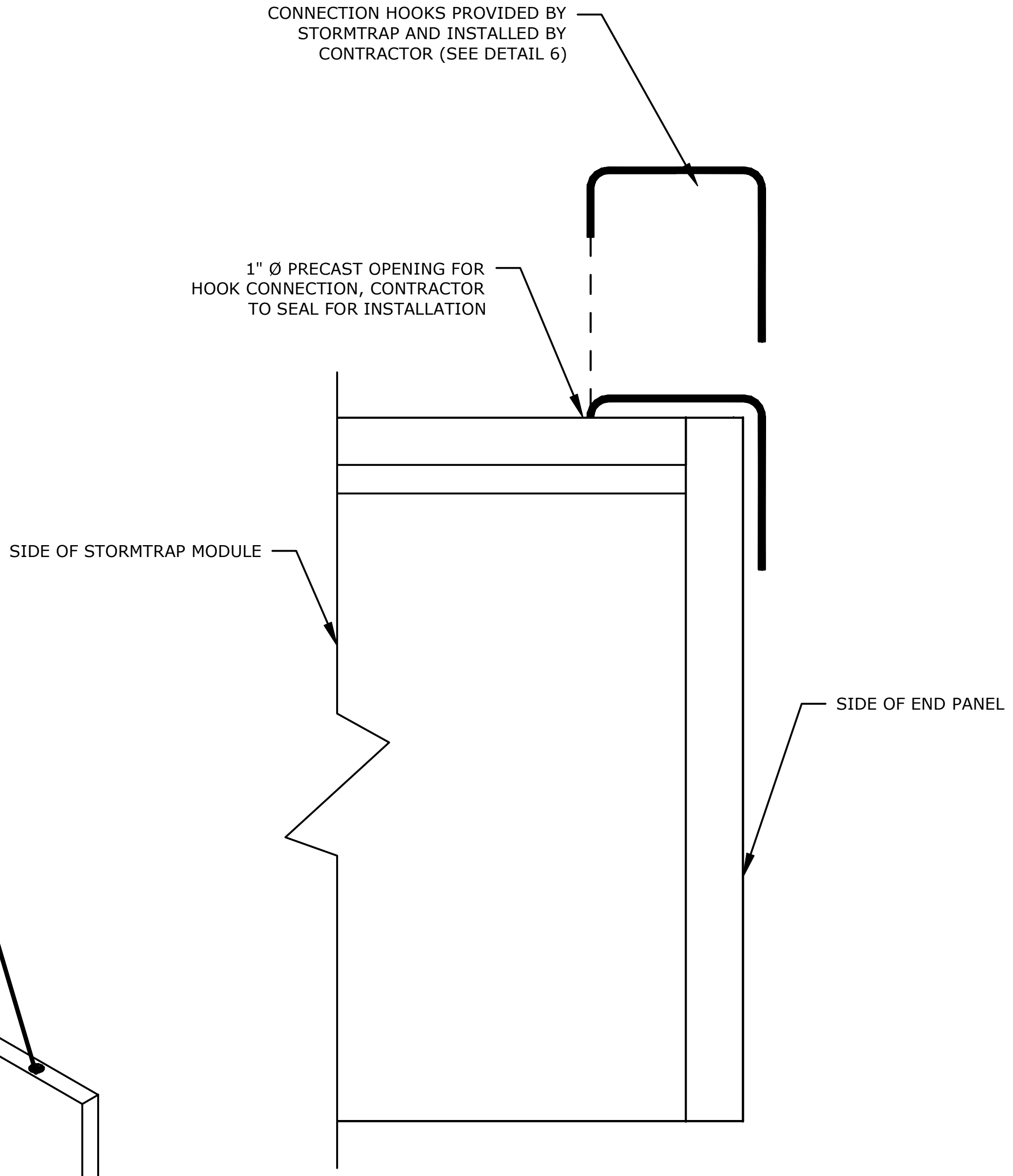

PANEL CONNECTION ELEVATION VIEW

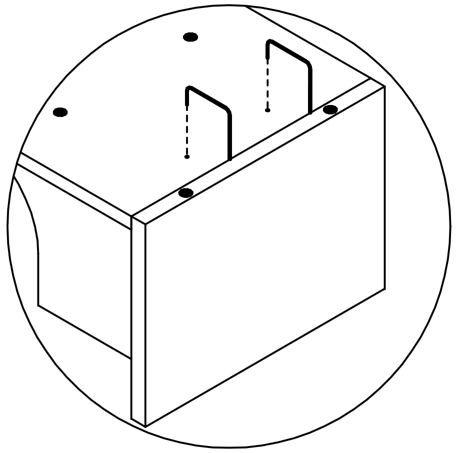

STEP 1

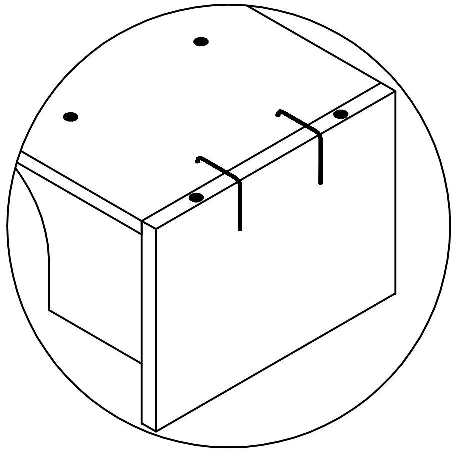

STEP 2

DETAIL 6

StormTrap®

PATENTS LISTED AT: [HTTP://STORMTRAP.COM/PATENT]

1287 WINDHAM PARKWAY
ROMEOVILLE, IL 60446
P:815-941-4549 / F:331-318-5347

ENGINEER INFORMATION:

PROJECT INFORMATION:

DOUBLETRAP DETENTION

ROMEOVILLE, IL

CURRENT ISSUE DATE:

ISSUED FOR:

SAMPLE PROJECT

REV.	DATE:	ISSUED FOR:	DWN BY:

SCALE:

NTS

SHEET TITLE:

DOUBLETRAP
INSTALLATION
SPECIFICATIONS

SHEET NUMBER:

3.1

ZONE CHART		
ZONES	ZONE DESCRIPTIONS	REMARKS
ZONE 1	FOUNDATION AGGREGATE	
ZONE 2	BACKFILL	
ZONE 3	FINAL COVER OVERTOP	

STORMTRAP ZONE INSTALLATION SPECIFICATIONS/PROCEDURES

1. THE FILL PLACED AROUND THE STORMTRAP MODULES MUST DEPOSITED ON BOTH SIDES AT THE SAME TIME AND TO APPROXIMATELY THE SAME ELEVATION. AT NO TIME SHALL THE FILL BEHIND ONE SIDE WALL BE MORE THAN 2'-0" HIGHER THAN THE FILL ON THE OPPOSITE SIDE. BACKFILL SHALL EITHER BE COMPACTED AND/OR VIBRATED TO ENSURE THAT BACKFILL AGGREGATE/STONE MATERIAL IS WELL SEATED AND PROPERLY INTER LOCKED. CARE SHALL BE TAKEN TO PREVENT ANY WEDGING ACTION AGAINST THE STRUCTURE, AND ALL SLOPES WITHIN THE AREA TO BE BACKFILLED MUST BE STEPPED OR SERRATED TO PREVENT WEDGING ACTION. CARE SHALL ALSO BE TAKEN AS NOT TO DISRUPT THE JOINT WRAP FROM THE JOINT DURING THE BACKFILL PROCESS. BACKFILL MATERIAL SHALL BE CLEAN, CRUSHED, ANGULAR No. 5 (AASHTO M43) AGGREGATE. IF NATIVE EARTH IS SUSCEPTIBLE TO MIGRATION, CONFIRM WITH GEOTECHNICAL ENGINEER AND PROVIDE PROTECTION AS REQUIRED.

2. DURING PLACEMENT OF MATERIAL OVERTOP THE SYSTEM, AT NO TIME SHALL MACHINERY BE USED OVERTOP THAT EXCEEDS THE DESIGN LIMITATIONS OF THE SYSTEM. WHEN PLACEMENT OF MATERIAL OVERTOP, MATERIAL SHALL BE PLACED SUCH THAT THE DIRECTION OF PLACEMENT IS PARALLEL WITH THE OVERALL LONGITUDINAL DIRECTION OF THE SYSTEM WHENEVER POSSIBLE.

3. THE FILL PLACED OVERTOP THE SYSTEM SHALL BE PLACED AT A MINIMUM OF 6" LIFTS. AT NO TIME SHALL MACHINERY OR VEHICLES GREATER THAN THE DESIGN HS-20 LOADING CRITERIA TRAVEL OVERTOP THE SYSTEM WITHOUT THE MINIMUM DESIGN COVERAGE. IF TRAVEL IS NECESSARY OVERTOP THE SYSTEM PRIOR TO ACHIEVING THE MINIMUM DESIGN COVER, IT MAY BE NECESSARY TO REDUCE THE ULTIMATE LOAD/BURDEN OF THE OPERATING MACHINERY SO AS TO NOT EXCEED THE DESIGN CAPACITY OF THE SYSTEM. IN SOME CASES, IN ORDER TO ACHIEVE REQUIRED COMPACTION, HAND COMPACTION MAY BE NECESSARY IN ORDER NOT TO EXCEED THE ALLOTTED DESIGN LOADING.

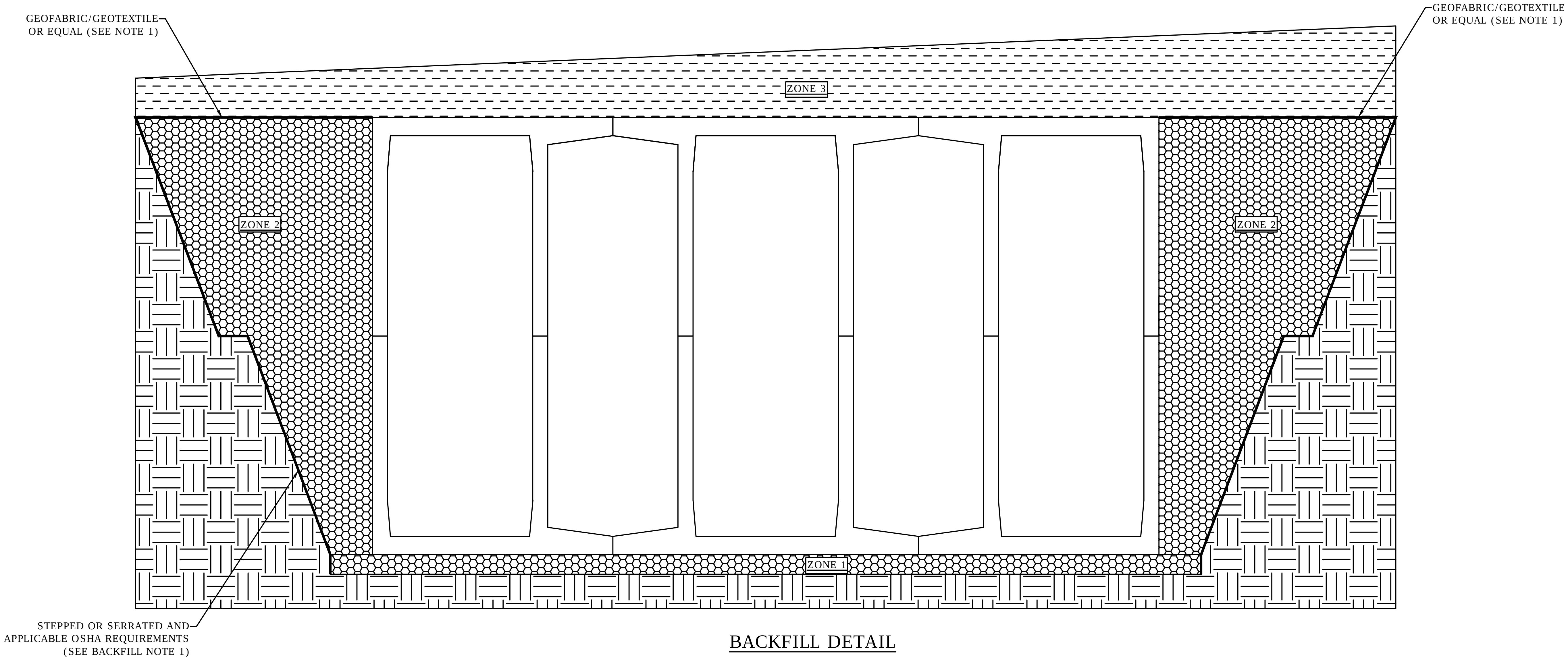

BACKFILL DETAIL

StormTrap®

PATENTS LISTED AT: [HTTP://STORMTRAP.COM/PATENT]

1287 WINDHAM PARKWAY
ROMEOVILLE, IL 60446
P:815-941-4549 / F:331-318-5347

ENGINEER INFORMATION:

PROJECT INFORMATION:

DOUBLETRAP DETENTION

ROMEOVILLE, IL

CURRENT ISSUE DATE:

ISSUED FOR:

SAMPLE PROJECT

REV.	DATE:	ISSUED FOR:	DWN BY:

SCALE:

NTS

SHEET TITLE:

DOUBLETRAP
BACKFILL
SPECIFICATIONS

SHEET NUMBER:

4.0

RECOMMENDED
ACCESS OPENING SPECIFICATION

1. A TYPICAL ACCESS OPENING FOR THE STORMTRAP SYSTEM ARE 2'-0" IN DIAMETER. ACCESS OPENINGS LARGER THAN 3'-0" IN DIAMETER NEED TO BE APPROVED BY STORMTRAP. ALL OPENINGS MUST RETAIN AT LEAST 1'-0" OF CLEARANCE FROM THE END OF THE STORMTRAP MODULE UNLESS NOTED OTHERWISE. ALL ACCESS OPENINGS TO BE LOCATED ON INSIDE LEG UNLESS OTHERWISE SPECIFIED.

2. PLASTIC COATED STEEL STEPS PRODUCED BY M.A. INDUSTRIES PART #PS3-PFC OR APPROVED EQUAL (SEE STEP DETAIL) ARE PROVIDED INSIDE ANY MODULE WHERE DEEMED NECESSARY. THE HIGHEST STEP IN THE MODULE IS TO BE PLACED A DISTANCE OF 1'-0" FROM THE INSIDE EDGE OF THE STORMTRAP MODULES. ALL ENSUING STEPS SHALL BE PLACED WITH A MAXIMUM DISTANCE OF 1'-4" BETWEEN THEM. STEPS MAY BE MOVED OR ALTERED TO AVOID OPENINGS OR OTHER IRREGULARITIES IN THE MODULE.

3. STORMTRAP LIFTING INSERTS MAY BE RELOCATED TO AVOID INTERFERENCE WITH ACCESS OPENINGS OR THE CENTER OF GRAVITY OF THE MODULE AS NEEDED.

4. STORMTRAP ACCESS OPENINGS MAY BE RELOCATED TO AVOID INTERFERENCE WITH INLET AND/OR OUTLET PIPE OPENINGS SO PLACEMENT OF STEPS IS ATTAINABLE.

5. ACCESS OPENINGS SHOULD BE LOCATED IN ORDER TO MEET THE APPROPRIATE MUNICIPAL REQUIREMENTS. STORMTRAP RECOMMENDS AT LEAST TWO ACCESS OPENINGS PER SYSTEM FOR ACCESS AND INSPECTION.

6. USE PRECAST ADJUSTING RINGS AS NEEDED TO MEET GRADE. STORMTRAP RECOMMENDS FOR COVER OVER 2' TO USE PRECAST BARREL OR CONE INSPECTIONS. (PROVIDED BY OTHERS)

RECOMMENDED
PIPE OPENING SPECIFICATION

1. MINIMUM EDGE DISTANCE FOR AN OPENING ON THE OUTSIDE WALL SHALL BE NO LESS THAN 1'-0".

2. MAXIMUM OPENING SIZE TO BE DETERMINED BY THE MODULE HEIGHT. PREFERRED OPENING SIZE Ø 36" OR LESS. ANY OPENING NEEDED THAT DOES NOT FIT THIS CRITERIA SHALL BE BROUGHT TO THE ATTENTION OF STORMTRAP FOR REVIEW.

3. CONNECTING PIPES SHALL BE INSTALLED WITH A 1'-0" CONCRETE COLLAR, AND AN AGGREGATE CRADLE FOR AT LEAST ONE PIPE LENGTH (SEE PIPE CONNECTION DETAIL). A STRUCTURAL GRADE CONCRETE OR HIGH STRENGTH, NON-SHRINK GROUT WITH A MINIMUM 28 DAY COMPRESSIVE STRENGTH OF 3000 PSI SHALL BE USED.

4. THE ANNULAR SPACE BETWEEN THE PIPE AND THE HOLE SHALL BE FILLED WITH HIGH STRENGTH NON-SHRINK GROUT.

RECOMMENDED PIPE
INSTALLATION INSTRUCTIONS

1. CLEAN AND LIGHTLY LUBRICATE ALL OF THE PIPE TO BE INSERTED INTO STORMTRAP.

2. IF PIPE IS CUT, CARE SHOULD BE TAKEN TO ALLOW NO SHARP EDGES. BEVEL AND LUBRICATE LEAD END OF PIPE.

3. ALIGN CENTER OF PIPE TO CORRECT ELEVATION AND INSERT INTO OPENING.

NOTE: ALL ANCILLARY PRODUCTS RECOMMENDED AND SHOWN ON THIS SHEET ARE RECOMMENDATIONS ONLY AND SUBJECT TO CHANGE PER THE INSTALLING CONTRACTOR.

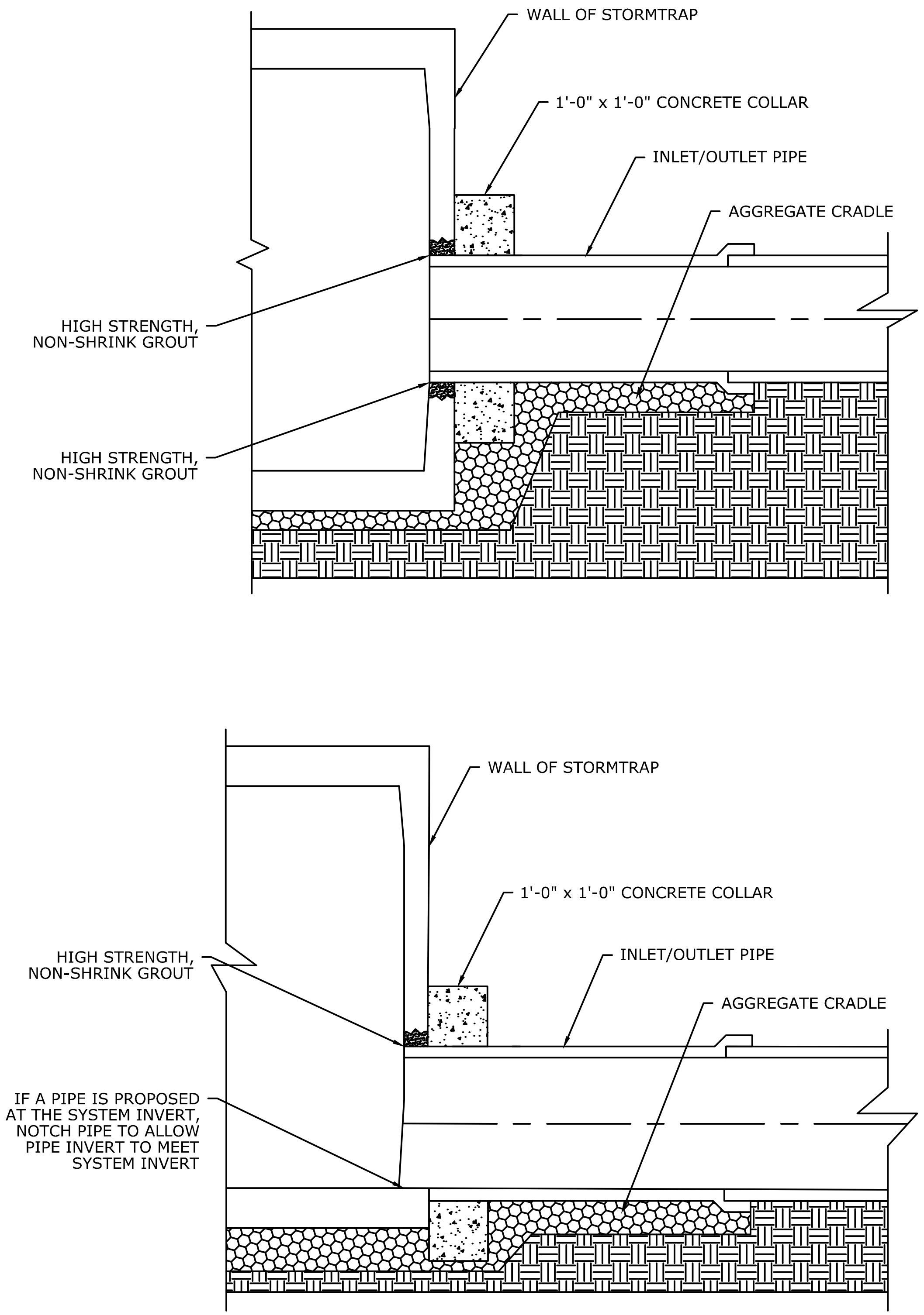

PIPE CONNECTION DETAIL

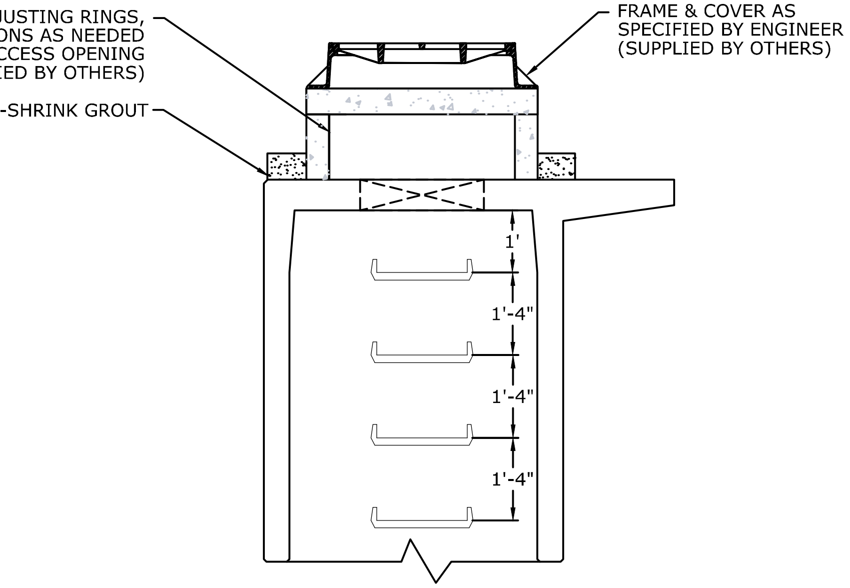

RISER / STAIR DETAIL

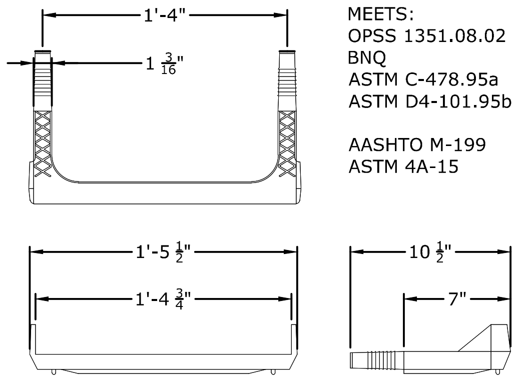

MEETS:
OPSS 1351.08.02
BNQ
ASTM C-478.95a
ASTM D4-101.95b

AASHTO M-199
ASTM 4A-15

STEP DETAIL

StormTrap®

PATENTS LISTED AT: [HTTP://STORMTRAP.COM/PATENT]

1287 WINDHAM PARKWAY
ROMEOVILLE, IL 60446
P:815-941-4549 / F:331-318-5347

ENGINEER INFORMATION:

PROJECT INFORMATION:

DOUBLETRAP DETENTION

ROMEOVILLE, IL

CURRENT ISSUE DATE:

ISSUED FOR:

SAMPLE PROJECT

REV.	DATE:	ISSUED FOR:	DWN BY:

SCALE:

NTS

SHEET TITLE:

RECOMMENDED PIPE / ACCESS OPENING SPECIFICATIONS

SHEET NUMBER:

5.0

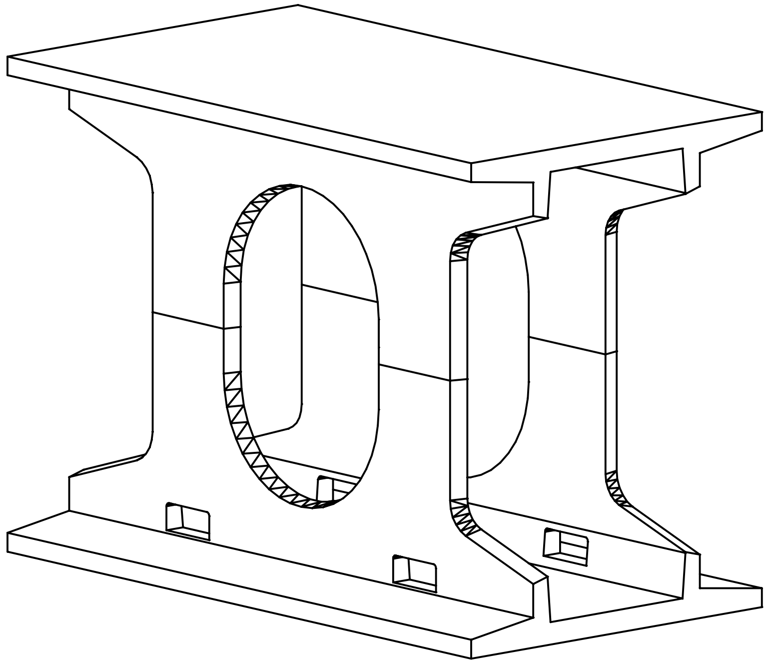

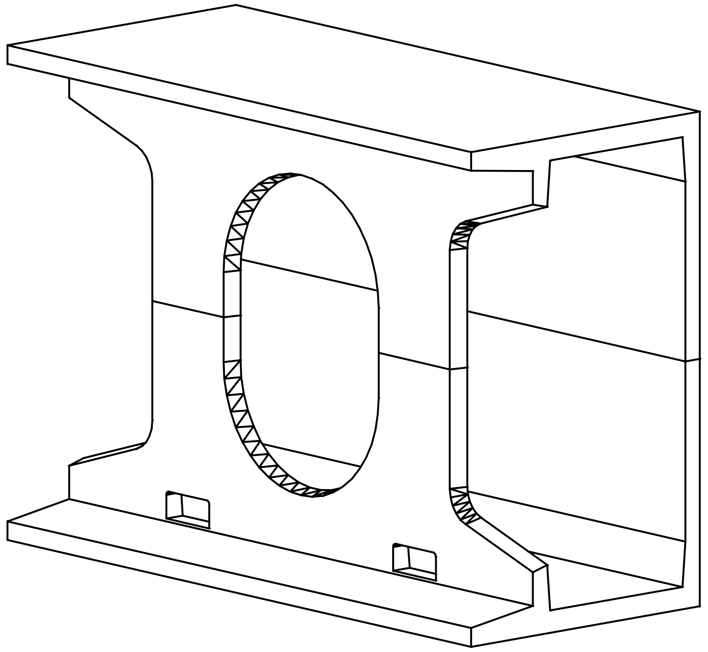

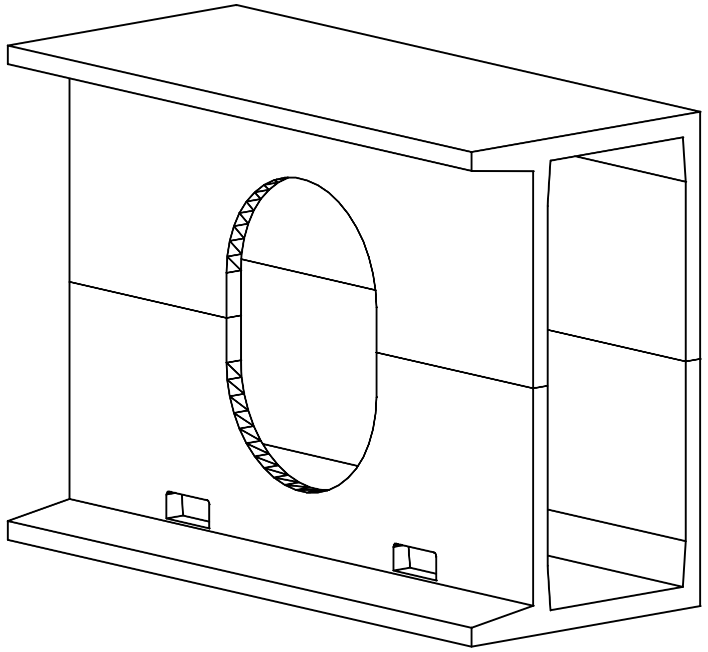

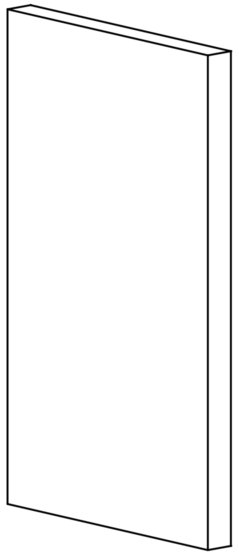

NOTES:
1. OPENING LOCATIONS AND SHAPES MAY VARY.
2. SP - INDICATES A MODULE WITH MODIFICATIONS.
3. P - INDICATES A MODULE WITH A PANEL ATTACHMENT.
4. POCKET WINDOW OPENINGS ARE OPTIONAL.

StormTrap

PATENTS LISTED AT: [HTTP://STORMTRAP.COM/PATENT]

1287 WINDHAM PARKWAY
ROMEOVILLE, IL 60446
P:815-941-4549 / F:331-318-5347

ENGINEER INFORMATION:

PROJECT INFORMATION:

DOUBLETRAP DETENTION

ROMEOVILLE, IL

CURRENT ISSUE DATE:

ISSUED FOR:

SAMPLE PROJECT

REV.	DATE:	ISSUED FOR:	DWN BY:

SCALE:

NTS

SHEET TITLE:

SINGLETRAP
MODULE TYPES

SHEET NUMBER:

6.0

THIS PAGE INTENTIONALLY LEFT BLANK FOR DOUBLE-SIDED PRINTING

Attachment 5
Drainage Report

Attach project's drainage report. Refer to Drainage Design Manual to determine the reporting requirements.

THIS PAGE INTENTIONALLY LEFT BLANK FOR DOUBLE-SIDED PRINTING

DRAINAGE STUDY
FOR
SOUTHWEST VILLAGE VESTING TENTATIVE MAP

(PRELIMINARY ENGINEERING)

Job Number 15013-C

March 29, 2019
Revised: October 25, 2019
Revised: July 16, 2020
Revised: July 15, 2022
Revised: December 15, 2022
Revised: April 28, 2023
Revised: May 14, 2024

DRAINAGE STUDY
FOR
SOUTHWEST VILLAGE VESTING TENTATIVE MAP

(PRELIMINARY ENGINEERING)

Job Number 15013-C

Brendan Hastie, P.E.
R.C.E. #65809
Exp. 09/25

Prepared for:
Tri Pointe Homes
13400 Sabre Springs Parkway, Suite 200
San Diego, California 92128
(858) 794-2500

Prepared by:
Rick Engineering Company
Water Resources Division
5620 Friars Road
San Diego, California 92110-2596
(619) 291-0707

March 29, 2019
Revised: October 25, 2019
Revised: July 16, 2020
Revised: July 15, 2022
Revised: December 15, 2022
Revised: April 28, 2023
Revised: May 14, 2024

TABLE OF CONTENTS

Figures:

Appendices:

Map Pockets:

DRAINAGE STUDY
FOR
SOUTHWEST VILLAGE VESTING TENTATIVE MAP

REVISION PAGE
May 14, 2024

The following comments have been provided by the City of San Diego on May 6th, 2024, and updates will be made to the two reports associated with these comments. The two reports include, the "Drainage Study for Southwest Village Vesting Tentative Map (VTM)", and the "Southwest Village Technical Memorandum Addressing Hydrology and Water Quality for Emergency Vehicle Access Road 'Project Alternative'", all dated May 14, 2024. The comments provided by the City of San Diego that are related to the Drainage Study are below with responses from Rick Engineering Company in bold.

Comment 69: Emergency Vehicle Access Rd - The technical memo addressing drainage and storm water should be included as an Appendix in the overall Drainage Study. Update the Table of Contents accordingly.

This technical memo has been added as Appendix J to the Drainage Study for Southwest Village Vesting Tentative Map and the table of contents has been updated to reflect this.

Comment 70: Emergency Vehicle Access Rd - The technical memo addressing drainage and storm water shall include sizing calculations for the rip rap, lined ditches and 18" storm drain.

Sizing calculations for energy dissipation will be provided during final engineering. Normal depth sizing for the lined ditches has been performed using Hydraulic Toolbox and it has been added as an Attachment to the Technical Memo for the Emergency Vehicle Access Road.

DRAINAGE STUDY
FOR
SOUTHWEST VILLAGE VESTING TENTATIVE MAP

REVISION PAGE
April 28, 2023

The following comments have been provided by the City of San Diego on March 3, 2023, and updates have been made to the three reports associated with these comments all dated December 15th, 2022. The three reports include, the “Conceptual Drainage and Water Quality Summary for Southwest Village Specific Plan”, the “Drainage Study for Southwest Village Vesting Tentative Map (VTM)”, and the “Priority Development Project (PDP) Storm Water Quality Management Plan (SWQMP) for Southwest Village Vesting Tentative Map (VTM)”, all dated April 28, 2023. A meeting was held on November 10th, 2022, with the City of San Diego to review the comments previously provided and to develop concurrence on what should be addressed with the Vesting Tentative Map (VTM) submittal and what can be addressed with final engineering. Many of the comments received on March 3, 2023, are repeat comments that were previously discussed with the City and an approach agreed to. Below are the comments provided by the City of San Diego that are related to the Specific Plan with responses from Rick Engineering Company in bold.

Specific Plan / VTM Drainage Study / VTM PDP SWQMP

95. Prior to the issuance of any building permit, the owner/Permittee shall incorporate any construction Best Management Practices necessary to comply with Chapter 14, Article 2, Division 1 (Grading Regulations) of the Municipal Code, into the construction plans or specifications. (From Cycle 15)

Best Management Practices (BMPs) have been identified throughout the site to treat the proposed development. The BMPs for the VTM areas (Basin 100, 200, 300, and 1400) are shown on the civil plan sheets and approximate locations for the Specific Plan areas are also identified in the Conceptual Water Quality and HMP Exhibit that is apart of Map Pocket 3 of this report.

96. Prior to the issuance of any building permit, the Owner/Permittee shall submit a Technical Report that will be subject to final review and approval by the city engineer, based on the Storm Water Standards in effect at the time of the construction permit issuance. (From Cycle 15)

Comment noted. As the Specific Plan areas move towards preliminary engineering, technical reports will be developed for review and approval by the City Engineering staff that will comply with the Storm Water Standard in effect at that time.

97. Prior to the issuance of any building permit, the Owner/Permittee must enter into a Storm Water Management and Discharge Control Maintenance Agreement, which will be recorded in the property records of the county, satisfactory to the City Engineer. (From Cycle 15)

A draft Storm Water Management and Discharge Control Maintenance Agreement (SWMDCMA) has been included in attachment 3 of the PDPSWQMP document and will be recorded during the Final Engineering phase of this project.

98. Prior to the issuance of any building permit, the Owner/Permittee shall enter into a Maintenance Agreement for the ongoing permanent BMP maintenance, satisfactory to the City Engineer. (From Cycle 15)

A draft Maintenance Agreements has been included in attachment 3 of the PDPSWQMP document and will be recorded during the Final Engineering phase of this project.

102. The drainage system proposed for this development, as shown on the site plan, is subject to approval by the City Engineer. (From Cycle 15)

The project engineers have met with City staff extensively on this project and most recently on November 10th, 2022 to discuss the drainage system for this project and explain the complexities that are introduced with the landslide area directly to the west of Basin 300.

104. Development of this project shall comply with all storm water construction requirements of the State Construction General Permit, Order No. 2009-0009-DWQ, or subsequent order, and the Municipal Storm Water Permit, Order No. R9-2013-0001, or subsequent order. In accordance with Order No. 2009-0009DWQ, or subsequent order, a Risk Level Determination shall be calculated for the site and a Storm Water Pollution Prevention Plan (SWPPP) shall be implemented concurrently with the commencement of grading activities. (From Cycle 15)

The project will be in compliance with the State Construction General Permit, Order No. 2009-0009-DWQ, or subsequent order, and the Municipal Storm Water Permit, Order No. R9-2013-0001, or subsequent order including a SWPPP and a Risk Level Determination, which will be completed during the Final Engineering phase of this project.

105. Prior to issuance of a grading or a construction permit, a copy of the Notice of Intent (NOI) with a valid Waste Discharge ID number (WDID#) shall be submitted to the City of San Diego as a proof of enrollment under the Construction General Permit. When ownership of the entire site or portions of the site changes prior to filing of the Notice of Termination (NOT), a revised NOI shall be submitted electronically to the State Water Resources Board in accordance with the provisions as set forth in Section II.C of Order No. 2009-0009-DWQ and a copy shall be submitted to the City. (From Cycle 15)

The project will prepare and NOI with a valid WDID number as proof of enrollment under the CGP and will be prepared during the Final Engineering phase of the project.

106. The Subdivider shall enter into an agreement to indemnify, protect, and hold harmless the City, its officials and employees from any and all claims, demands, causes or action, liability or loss because of, or arising out of surface drainage entering into the property from the Right-of-Way due to the current drainage/ storm water design. (From Cycle 15)

In the locations where public storm drain systems cross into private lots, EMRAs will be provided so that the City will be able to maintain the public system. A hold harmless agreement can also be prepared and entered into with the City of San Diego.

139. The Subdivider shall demonstrate that mitigated peak flow rates for the 5, 10, 25, 50 and 100-year design storms do not exceed pre-project runoff rates at each outfall location. The pre-project runoff rate limit at each storm drain outfall should coincide with existing conditions, before any development has commenced in the Specific Plan, and not a future phased condition. (New Issue)

This has been previously addressed with the City of San Diego. The City of San Diego will be responsible for reviewing hydrologic and hydraulic studies and design features for conformance to criteria given in the "Drainage Design Manual" for every map or permit for which discretionary approval is sought from the City of San Diego. These project specific studies for each development will need to address potential impacts to downstream storm drainage facilities with sufficient detail to support the discretionary action. In addition, the new development projects will need to be able to demonstrate that the 50-year and 100-year detention requirements have been addressed (in order to satisfy the design criteria of the CPU Drainage Study). Additionally, the drainage area flowing into Mexico at the Spring Canyon concentration point and will need to comply with the US/Mexico International flood control detention requirements (i.e. – 5, 10, 25, 50, & 100-year storm events).

140. The Subdivider shall fully document all diversions of drainage area between the main watershed areas of the site. (New Issue)

This has been previously coordinated with the City of San Diego and in both the Drainage Study as well as the PDPSWQMP diversion maps are provided showing the area that is being diverted to Moody Canyon and Spring Canyon. It should also be noted that detention and hydromodification management are provided at each POC.

141. The Subdivider shall utilize Conjunctive Use guidelines for detention basin modeling of all mixed-use detention basins. (New Issue)

The guidelines for conjunctive use have been used when preparing the detention modeling for the VTM areas. Please see Appendix F of the Drainage Study.

142. The Subdivider shall demonstrate all proposed drainage basins have access and fencing provided to meet City criteria. (New Issue)

The proposed BMPs for the VTM area as shown in the PDPSWQMP are a combination of underground storage and compact biofiltration. Basin 1400 has an above ground biofiltration basin at the end of Beyer Road. This basin has an access road as shown on the plan sheets. Fencing guidelines have been followed per the City of San Diego City criteria.

143. The Subdivider shall provide a hydraulic analysis downstream at each storm drain outfall in the Spring, Moody, and Dillon Creek watersheds demonstrating proposed condition floodplain limits and channel velocities. (New Issue)

This has been previously coordinated with the City on the November 10th, 2022 meeting. Approximate floodplain limits have been provided for Moody Canyon, and the backup has been provided in the report titled, "Drainage Study for Southwest Village Vesting Tentative Map (VTM)" dated April 28, 2023. Please refer to Appendix I for additional information and to the exhibit in Map Pocket 2 for the mark up of the approximate floodplain limits. Once the areas tributary to Dillion Canyon are developed additional analysis can be done. If Spring Canyon were to be considered, a watershed wide approach would be necessary to accurately map the floodplain, including in-depth hydraulic analysis of the culvert that crosses from the US into Mexico.

144. The Subdivider shall provide a hydraulic analysis downstream at each storm drain
outfall involving a diversion of drainage area or an increase in any of the analyzed peak flows as compared to pre-project conditions. (New Issue)

All project areas, including those where diversion occurs, is subject to both detention and hydromodification requirements. The new development projects will need to be able to demonstrate that the 50-year and 100-year detention requirements have been addressed (in order to satisfy the design criteria of the CPU Drainage Study). Additionally, the drainage area flowing into Mexico at the Spring Canyon concentration point and will need to comply with the US/Mexico International flood control detention requirements (i.e. – 5, 10, 25, 50, & 100-year storm events). With these requirements in place the post-project peak flows are anticipated to be less than or equal to the pre-project flows.

145. The Subdivider shall provide detailed energy dissipation analysis at each storm drain outfall to ensure proper receiving water protection from discharges of the 100-year design storm. (New Issue)

This comment has been previously coordinated with the City of San Diego. Outfalls from the VTM area Basin 100 and Basin 200 will be directed through an SDD-105 and Basin 300 will be directed down Beyer Road to a biofiltration basin located adjacent to Beyer Park. Additional analysis for other project areas will be considered as those pads are developed in the Specific Plan area and additional analysis will be performed in final engineering for each of the VTM outfalls.

DRAINAGE STUDY
FOR
SOUTHWEST VILLAGE VESTING TENTATIVE MAP

REVISION PAGE
December 15, 2022

The following comments have been provided by the City of San Diego on October 10th, 2022, and updates will be made to the three reports associated with these comments. The three reports include, the "Conceptual Drainage and Water Quality Summary for Southwest Village Specific Plan", the "Drainage Study for Southwest Village Vesting Tentative Map (VTM)", and the "Priority Development Project (PDP) Storm Water Quality Management Plan (SWQMP) for Southwest Village Vesting Tentative Map (VTM)", all dated December 15, 2022. A meeting was held on November 9th, 2022, with the City of San Diego to review the comments provided and to develop concurrence on what should be addressed with the Vesting Tentative Map (VTM) submittal and what can be addressed with final engineering. The comments provided by the City of San Diego that are related to the Drainage Study are below with responses from Rick Engineering Company in bold.

Specific Plan / VTM Drainage Study / VTM PDP SWQMP

120. The following are comments from the Deputy City Engineer on the 3 drainage/storm water reports: (New Issue)

     Comment noted. The follow comments relate to the Specific Plan, the VTM Drainage Study, and the VTM PDPSWQMP reports.

121. For each proposed storm drain outfall location, provide the pre-project drainage area and 100-year peak runoff rates along with the post-project drainage area and 100-year unmitigated and mitigated peak runoff rates. The table should include a column to reflect diversion of drainage areas and peak flow changes. (New Issue)

     The Specific Plan document includes a summary of the 100-year peak runoff rates along with drainage area for the pre and the post project condition. Please refer to Map Pocket 2 of the report titled, "Conceptual Drainage and Water Quality Summary for Southwest Village Specific Plan" dated December 15, 2022. The VTM specific Drainage Study includes both the unmitigated and the mitigated flow rates please refer to Table 2.1 and Table 4.1 as well as the exhibits in Map Pocket 2. For the specific plan, final calculations for the mitigated peak will be performed as each area is developed.

122. For each of the main receiving waters (Dillon Canyon, Spring Canyon, Moody Canyon, and site drainages toward Beyer/San Ysidro Blvd), provide the pre-project drainage area and 100-year peak runoff rates along with the post-project drainage area and 100-year unmitigated and mitigated peak runoff rates. The table should include a column to reflect diversion of drainage areas and peak flow changes as a result of the proposed Specific Plan development. (New Issue)

An overall exhibit has been provided in the Specific Plan report that summarizes pre and post project drainage to the main receiving waters. Please refer to Map Pocket 2 in the report titled, "Conceptual Drainage and Water Quality Summary for Southwest Village Specific Plan" dated December 15, 2022.

123. Detail how the Specific Plan will implement peak flow attenuation routing and adhere to the regional Conjunctive Use Guidelines for mixed use drainage facilities. (New Issue)

For the Specific Plan, peak flow attenuation routing will be developed at a later date when the each of the subsequent areas are considered. The regional conjunctive use guidelines will be followed based on the most recent City of San Diego Stormwater Standards manual (currently dated May 2021).

125. Detention routing for multiple storm events (100-year plus lower intensity runoff events) will be required. (New Issue)

The City of San Diego will be responsible for reviewing hydrologic and hydraulic studies and design features for conformance to criteria given in the "Drainage Design Manual" for every map or permit for which discretionary approval is sought from the City of San Diego. These project specific studies for each development will need to address potential impacts to downstream storm drainage facilities with sufficient detail to support the discretionary action. In addition, the new development projects will need to be able to demonstrate that the 50-year and 100-year detention requirements have been addressed (in order to satisfy the design criteria of the CPU Drainage Study). Additionally, the drainage area flowing into Mexico at the Spring Canyon concentration point and will need to comply with the US/Mexico International flood control detention requirements (i.e. – 5, 10, 25, 50, & 100-year storm events).

126. Provide approximate floodplain limits and channel velocities in Dillon Canyon, Spring Canyon, and Moody Canyon downstream of the project outfalls based on the total post-project runoff rates (onsite plus offsite runoff). (New Issue)

Approximate floodplain limits have been provided for Moody Canyon, and the back up has been provided in the report titled, "Drainage Study for Southwest Village Vesting Tentative Map (VTM)" dated December 15, 2022. Please refer to Appendix I for additional information and to the exhibit in Map Pocket 2 for the mark up of the approximate floodplain limits. Once the areas tributary to Dillion Canyon are developed additional analysis can be done. If Spring Canyon were to be considered, a watershed wide approach would be necessary to accurately map the floodplain,

including in-depth hydraulic analysis of the culvert that crosses from the US into Mexico.

127. Provide the culvert capacity at the international border (Spring Canyon) and Enright Drive (Moody Canyon) and compare the capacity to the post-project flows (onsite plus offsite runoff). Include inlet control calculations when determining culvert capacities. (New Issue)

The capacity of the storm drain within Enright Drive has been determined and has been included in Appendix E of the report titled, "Drainage Study for Southwest Village Vesting Tentative Map (VTM)" dated December 15, 2022. The capacity of the culvert at the international border (Spring Canyon) has not been provided per the 11/9/2022 meeting.

128. Describe the approach for sizing energy dissipation facilities at each storm drain outfall for 100-year flows and velocities from the proposed Specific Plan area. (New Issue)

Outfalls from the VTM area Basin 100 and Basin 200 will be directed through an SDD-105 and Basin 300 will be directed down Beyer Road to a biofiltration basin located adjacent to Beyer Park. Additional analysis for other project areas will be considered as those pads are developed in the Specific Plan area and additional analysis will be performed in final engineering for each of the VTM outfalls.

129. Comment on any channel protection measures needed downstream of the storm drain outfalls (in smaller canyons between the storm drain outfall and the main canyons, in the receiving waters, etc.) (New Issue)

Flowrates from the project site will be mitigated in the proposed project condition and no adverse impacts to the downstream receive channel are anticipated.

DRAINAGE STUDY
FOR
SOUTH OTAY MESA VESTING TENTATIVE MAP

REVISION PAGE
July 15, 2022

This Drainage Study presents a revision to the report titled, "Drainage Study for South Otay Mesa Vesting Tentative Map," dated July 16th, 2021 pursuant changes to the site layout. Notably, outfalls discharging to the San Ysidro landslide complex to the west of the project site have been removed, requiring the approach for drainage and water quality to be adjusted and the site layout to be redesigned. The drainage map for the post-project condition has been revised to reflect the most recent changes. Please find this exhibit in Map Pocket 2.

DRAINAGE STUDY
FOR
SOUTH OTAY MESA VESTING TENTATIVE MAP

REVISION PAGE
July 16, 2020

This Drainage Study presents a revision to the report titled, “Drainage Study for South Otay Mesa Vesting Tentative Map,” dated October 25th, 2019 pursuant changes to the site layout. The changes include shifting the highpoint between Basin 300 and Basin 400 to the West of the cul-de-sac on Street A, now the eastern half of Street A is directed down Beyer Boulevard. Revisions have also been made to the layout of the multi-family housing units on the southeastern corner of Basin 200 adjacent to Caliente Ave, shifting the major basin boundary slightly to the west. Finally, the location of the wildlife crossing has shifted east and the proposed culvert on the western half of Beyer Boulevard will be designed to convey offsite tributary flows. The drainage map for the post-project condition has been revised to reflect the most recent changes. Please find this exhibit in Map Pocket 2.

DRAINAGE STUDY
FOR
SOUTH OTAY MESA VESTING TENTATIVE MAP

REVISION PAGE
October 25, 2019

This Drainage Study presents a revision to the report titled, "Drainage Study for South Otay Mesa Vesting Tentative Map," dated March 29th, 2019 pursuant to plan check review comments received from the City of San Diego (LDR-Engineering Review Cycle 4) on May 7th, 2019. The following text identifies the comments along with response from Rick Engineering Company in bold. The site map for the post-project condition has also been revised to reflect the most recent changes to the site layout. Please find this exhibit in Map Pocket 2.

28. Add a discussion to the Drainage Study stating if the proposed project is required to obtain approval from the Regional Water Quality Control Board Under Federal Clean Water Act (CWA) section 401 or 404. A complete explanation must be provided. Please note, if the proposed project is subject to regulations as set forth in CWA 401/404, approval from the California Regional Water Quality Control Board must be obtained prior to permit issuance (New Issue)

    A qualitative discussion pertaining to the 401/404 requirements has been included in the Drainage Study. See section 1.6.

1.0 INTRODUCTION

1.1 Project Description

This drainage study presents hydrologic and hydraulic analyses for the proposed Southwest Village Vesting Tentative Map project (herein referred to as "the project") in support of preliminary engineering. The project is bounded by Interstate 805 to the west, State Route (SR) 905 to the north, and the international border with Mexico to the south. See Figure 1, Vicinity Map, located at the end of Section 1.0.

Overview

The project is proposed to develop a currently bare mesa in the South Otay Valley into a housing development. This would be accomplished through the construction of six (6) different planning areas of varying densities along with accompanying access roads, utilities, and storm drain.

San Ysidro Landslide Complex Considerations

Following conventional drainage design, pre-project drainage basins were delineated, and the proposed project grading was coordinated to ensure that the area of the post-project drainage basins matched that of the pre-project areas. Outfall locations were carefully selected at points of concentration around the project site where the existing topography narrows to form existing channels. However, concerns were raised about the stability of the San Ysidro landslide complex that borders the southwest margin of VTM-1 and the potential impact to this from an increase in stormwater volume from the proposed project site.

To understand this further, Geocon performed geotechnical investigations that penetrated the landslide in three locations. Based on this information, two cross-sections were developed for use in geologic characterization and the performance of slope stability analysis. With supplementary reports from both Rick Engineering ("Landslide Hydrology Analysis for Southwest Village," dated April 16, 2021) and a Groundwater consultant from Dudek ("Initial Assessment of Groundwater Conditions at the Southwest Village Site, Otay Mesa and Surrounding Areas, San Diego County," dated June 14, 2021), Geocon prepared a report titled, "Supplemental Geotechnical Investigation and Slope Stability Analysis: Southwest Village VTM-1 San Diego, California," dated June 25, 2021. In Section 5 of the report, Geocon concludes,

> *5.11 Several storm water outfall locations were contemplated during the original project design. These features were proposed to discharge storm runoff collected from the project into pronounced drainages within the landslide complex. Although the infiltration data collected from the discharge locations supported a short-term discharge without adverse effects, the potential for scour and injection of storm water into the slide mass during extreme storm events resulted in a requirement to redesign the storm drain system to discharge outside landslide areas.*

Per the conclusions of this report, the drainage area that discharged to the west in the existing condition has now been diverted away from the San Ysidro landslide complex in the proposed condition and the outfalls have been relocated. Refer to Map Pocket 2 that will show the proposed outfall locations and site plan.

City of San Diego Meeting – January 2022

A meeting with the City of San Diego on January 28, 2022 was called to discuss possible alternatives to address the drainage complications due to the landslide complex. A key discussion point in the meeting was whether On-Site flows from Basin 300 would be allowed to Co-mingle with public runoff. After discussion, the City, Rick Engineering, and Tri-Pointe Homes agreed that this was the most acceptable alternative. Primarily, the question that was discussed was how the public/private flows will interact for low flow and high flows events and how the interactions between BMP 3, Beyer Blvd. storm drain, and Beyer Park Biofiltration Basin would work together. Please see the meeting minutes in Appendix H for more details.

Low Flow Events are understood to correspond to water quality storm events, i.e. where 24-hr runoff volume does not exceed the 85% storm rainfall. For these events runoff from basin 300 collects in a large vault, BMP 3, and is filtered through parallel Modular Wetland Units. The outflow from the Modular Wetlands Units is limited to 0.5 times the pre-development Q2 of the Basins Pre-Development area. While BMP 3 is filling and discharging through its low flow orifice at up to 1.25cfs, runoff from Beyer Blvd, Street A, and West Avenue begin to fill the Biofiltration Basin 14 (Beyer Basin). BMP 14 has been sized Volume Based. To ensure that low flow discharge from BMP 3 does not displace volume that is intended to be used from direct runoff from Basin

1400, the low flow release rate of the Beyer Basin is 2.03 CFS or 0.78CFS higher than that of the upstream BMP. Even when BMP 3 is discharging at peak flow rate Beyer Basin will still be able to draw down. Ultimately, water from BMP 3 will be double treated. Full treatment of water quality runoff from Basin 1400 is expected with this configuration.

Mid to High-level storm events, ~Q2 to Q100, will fill the BMPs beyond the water quality ponding depths and activate upper outlets. Both basins have been designed to provide Hydromodification and 100-Year detention. As BMP 14 lies below BMP 3, the outlet works need to be upsized to pass through mitigated flows from the upstream BMP. Modeling has been done that shows compliance for HMP and detention at the project's point of connection, POC M.C. Refer to Attachment 2 the report titled, "Priority Development Project Stormwater Quality Management Plan for Southwest Village," dated March 17th, 2022 (and any revisions thereafter) for HMP SWMM modeling and Attachment F of this Drainage Study for detention routing calculation. The storm drain along Beyer Blvd. has been sized based on detained 100-year flow rates out of BMP 3.

1.2 Drainage Characteristics and Hydromodification Management Criteria

Existing Drainage Characteristics

The existing area is composed of flat mesa tops and finger canyons that drain to the west through Moody Canyon or small natural channels. This is pervious area that historically would have been used for agriculture and farming starting in the 1960s. The existing area within the project boundaries is defined by six (6) major drainage basins, Basin 100, Basin 200, Basin 300, Basin 400, Basin 500, and the Beyer Boulevard drainage basin (Basin 1400). Basin 100 encompasses the most northern portion of the project site and drains in a south westerly direction through a finger canyon towards Moody Canyon Creek where it confluences with other offsite flows (defined in Basin 1400). Basin 200 encompasses the eastern edge of the project site and drains in a westerly direction into Moody Canyon Creek where it confluences with flows from Basin 300 before entering the main channel. Basin 300 includes the western portions of the project site and drains in a northerly direction towards Moody Canyon Creek. Basin 400 and Basin 500 make up the southern and western portion of the project site and drains in a westerly direction through natural channels and eventually into basins on the eastern edge of the railroad tracks. The Beyer Boulevard drainage basin (Basin 1400) is made up of offsite flows on the northwestern extents of the project site and drains to the west, where flows from Basin 100, 200, 300, and 1400 are collected from Moody Canyon Creek by an existing 54-inch storm drain system on Enright Drive. The existing storm drain system along Enright Drive eventually outlets to the Tijuana River, which extends all the way to the Pacific Ocean within the vicinity of Imperial Beach. Refer to Map Pocket 1 for a summary of the pre-project drainage areas.

During the January 28, 2022 meeting, the capacity of the downstream existing 54-inch RCP on Beyer Blvd. was raised. As part of this project, the capacity of the pipe in question has been studied with AES Pipeflow from approximately 300 feet west of Delany Dr. to the project's point of connection. The analysis suggests that this pipe has capacity to convey 100-year peak flows in the existing condition. The project proposes to match existing flow rates using detention basins. The pipe would then similarly have capacity in the proposed condition. See Appendix A for Pre-Project Hydrology, Appendix B for Post-Project Hydrology, Appendix E for Hydraulic Analysis including a mark-up of As-Built Plans, and Appendix F for Detention routing calculations.

Proposed Drainage Characteristics

In the post-project condition, the drainage characteristics for Basin 100 and 200 will remain similar as compared to the pre-project conditions. However, due to the proximity of the San Ysidro Landslide complex, the geotechnical engineer and the ground water consultant have recommended that no drainage be directed to the landslide area. Therefore, Basin 400 and approximately half of Basin 500, which previously drained through natural channels to the west, have been incorporated into Basin 300 and directed to the north in the post-project condition. Additional detail for each drainage basin is provided below. It is currently anticipated that the project will result in an overall increase to impervious surfaces. As a result, the project as a whole will result in an increase in storm water runoff. A detention analysis will be provided to address this increase in runoff for the 100-year storm event. At this preliminary stage, it is not anticipated that the project will adversely impact the hydraulics of the existing 54-inch storm drain located downstream of the project. Refer to Appendix E for calculations. Furthermore, Low Impact Development (LID) Best Management Practices (BMPs) will be utilized to collect, retain, treat, and discharge runoff contributing further to reducing the impact of increases in runoff. Drainage characteristics for each of the major drainage basins are described below.

Drainage Basin 100

Drainage Basin 100 will include on-site flood control conveyance for the 100-year storm event. On-site storm conveyance systems will be used to collect runoff from the existing portions of the project and from the proposed on-site development area. A network of storm drains, open channels, water quality (WQ), and Hydromodification Management Plan (HMP) features will be used to collect, convey, and manage storm water runoff throughout the development area prior to discharging into Moody Canyon Creek. Proposed landscaped hillsides along the edges of the planning area are considered self-mitigating areas and will bypass the proposed water quality feature because they are not required to be treated. The tributary area to the existing outfall location would remain similar to its current drainage patterns.

Drainage Basin 200

The drainage basin will include on-site flood control conveyance for the 100-year storm event. On-site storm conveyance systems will be used to collect runoff from the existing portions of the project and from the proposed on-site development area. A network of storm drains and open channels will be used to convey storm water runoff to the proposed proprietary biofiltration BMP and HMP detention vault prior to discharging into Moody Canyon Creek. Proposed landscaped hillsides along the edges of the planning area are considered self-mitigating areas and will bypass the proposed water quality feature because they are not required to be treated. The tributary area to the existing outfall would remain similar to its current drainage patterns.

Drainage Basin 300

Due to the presence of the San Ysidro Landslide area, Drainage Basin 300 will incorporate drainage basins that were originally directed to the west in the pre-project conditions. This includes Basin 400 and approximately the northern half of Basin 500 (the southern half will be directed to Spring Canyon in the ultimate condition). Outflows from Basin 300 will discharge into the proposed backbone storm drain along Beyer Blvd. While atypical, the mingling of clean and untreated flows was deemed to be the best option considering difficulties maintaining a very inaccessible storm drain outfall in Moody Canyon and the environmental impacts resulting from its construction.

Meetings with the City of San Diego Department of Development services have supported this approach.

Basin 300 will also include on-site flood control conveyance for the 100-year storm event. On-site storm conveyance systems will be used to collect runoff from the existing portions of the project and from the proposed on-site development area. A network of storm drains, open channels, water quality (WQ), and Hydromodification Management Plan (HMP) features will be used to collect, convey, and manage storm water runoff throughout the development area. Proposed landscaped hillsides along the edges of the planning area are considered self-mitigating areas that will bypass the proposed water quality feature because they are not required to be treated.

Beyer Boulevard Drainage Basin (Basin 1400)

This large drainage basin makes up much of the Moody Canyon watershed and at the downstream point of interest (POI) it has confluence with the three other post-project basins proposed within the site (Basin 100, 200, and 300). Basin 1400 will include on-site flood control conveyance for the 100-year storm event. On-site storm conveyance systems will be used to collect runoff from the existing portions of the project and from the proposed on-site development area. A network of storm drains, water quality (WQ), and Hydromodification Management Plan (HMP) features will be used to collect, convey, and manage storm water runoff throughout the roadway prior to discharging into the existing 54-inch storm drain system on Enright Drive. The tributary area to the existing outfall has increased in the post-project as compared to the pre-project to mitigate for the presence of the landslide complex. However, despite the increase in area, post-project flows will be mitigated back to pre-project levels.

One wildlife overpass and several smaller critter-crossings are proposed through the alignment of Beyer Blvd. The area tributary to these crossings has been minimized and brow ditches have been designed to limit the flow of stormwater into these facilities. The culvert downstream will be designed to convey off site tributary flows from Moody Canyon.

1.3 Hydrology and Hydraulics

Hydrology and hydraulics are discussed in detail in Sections 2.0 and 3.0 of this report.

1.4 Water Quality

Post-project storm water runoff will be treated per the City of San Diego's Storm Water Standards, dated May 2021, and will be discussed in the report titled, "Priority Development Project Storm Water Quality Management Plan (PDP SWQMP) for Southwest Village (Preliminary Engineering)," dated December 16, 2022, and any revisions thereafter, prepared by Rick Engineering Company (Job No. 15013-C). Hydromodification management plan (HMP) requirements are also addressed within the Priority Development Project Storm Water Quality Management Plan (PDP SWQMP) for the project.

1.5 Hydromodification Management Requirements

According to the Storm Water Standards, Priority Development Projects must be designed so that runoff rates and durations are controlled to pre-development rates in order to reduce downstream erosion conditions and protect stream habitat. In order to comply with the Storm Water Standards, a hydromodification management plan is discussed within the PDP SWQMP for the project.

1.6 Clean Water Act and FEMA

This project is impacting jurisdictional waters and is subject to the 401/404 permit per the delineations of the Waters of the State provided by RECON Environmental.

The footprint of the project was checked against mapped FEMA floodplain, and it was determined that the project area is subjected to minimal flood hazard and given a Zone X designation (Areas determined to be outside the 0.2% annual chance floodplain). Refer to Appendix G for FEMA FIRMette panels.

Figure 1: Vicinity Map

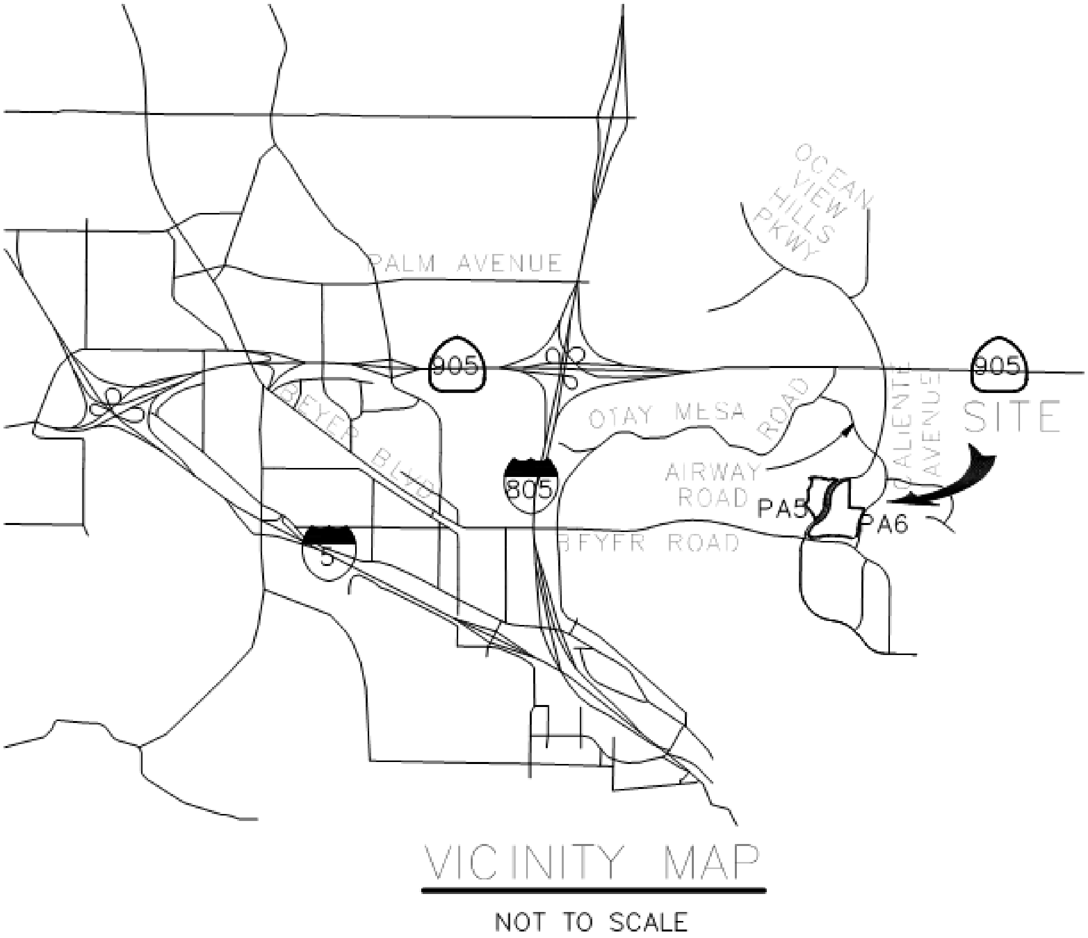

2.0 HYDROLOGY

2.1 Methodology

The City of San Diego Drainage Design Manual, dated January 2017, requires that the Modified Rational Method be used for hydrologic analysis of a watershed up to but not exceeding 1.0 square-mile (640 acres). The Rational Method computer program developed by Advanced Engineering Software (AES 2003) was used for this study because it satisfies the City of San Diego's design criteria.

2.1.1 Modified Rational Method

The AES hydrologic model is developed by creating independent node-link models of each interior drainage basin and linking these sub-models together at confluence points. The program has the capability to perform calculations for 15 hydrologic processes. These processes are assigned code numbers that appear in the results. The code numbers and their significance are as follows:

Code 1: Confluence analysis at a node
Code 2: Initial subarea analysis
Code 3: Pipe flow travel time (computer-estimated pipe sizes)
Code 4: Pipe flow travel time (user-specified pipe size)
Code 5: Trapezoidal channel travel time
Code 6: Street flow analysis through a subarea
Code 7: User-specified information at a node
Code 8: Addition of the subarea runoff to mainline
Code 9: V-Gutter flow thru subarea
Code 10: Copy main-stream data onto a memory bank
Code 11: Confluence a memory bank with the main-stream memory
Code 12: Clear a memory bank
Code 13: Clear the main-stream memory
Code 14: Copy a memory bank onto the main-stream memory
Code 15: Hydrologic data bank storage functions

In order to perform the hydrologic analysis, base information for the study area is required. This information includes the existing drainage facility locations and sizes, existing land uses, flow patterns, drainage basin boundaries, and topographic elevations. Drainage basin boundaries, flow patterns, and topographic elevations are shown on the drainage exhibits located in the map pockets.

2.2 Criteria

The hydrologic conditions were analyzed in accordance with the City of San Diego's design criteria as follows:

Design Storm:	100-year
Runoff Coefficients*:	
0% Impervious	C = 0.45
100% Impervious	C = 0.95
Soil Type:	D
Rainfall Intensity:	Based on time-intensity criteria per City of San Diego

* Weighted runoff coefficients were used where appropriate based on a percentage of 0.95 and 0.45. Refer to Appendix C for supporting materials. For the single-family residential lots, 60% impervious was assumed and for the multi-unit residential lots 70% impervious was assumed. For private and public streets, 90% impervious was assumed.

2.3 Hydrologic Results

Rational Method computer outputs for the pre- and post-project conditions can be found in Appendices A and B, respectively. Watershed boundaries, Rational Method node numbers, flow patterns, and areas can be found on the workmaps titled, “Drainage Study Map for Southwest Village VTM [Pre-project],” and “Drainage Study Map for Southwest Village VTM [Post-project],” located in Map Pockets 1 and 2, respectively. A summary of the hydrologic results for the pre- and post-project conditions at points of interest can be found in Table 2.1 below. Based on the summary, the post-project condition will maintain similar drainage patterns for Basins 100 and 200, however, due to the landslide complex area is diverted into Basin 300 from Basin 400 and Basin 500. The post-project peak flow rates have also increase in all basins compared to pre-project conditions, due to the large amount of proposed impervious area in the post-project condition. As a result of this increase, the project includes a detention analysis for the 100-year storm event to detain and attenuate post-project runoff rates back to the pre-project condition.

Table 2.1: Summary of Hydrologic Results

Drainage Basin #	Drainage Node # at Point of Interest	Project Condition	Tributary Area, A (acres)	Time of Concentration, T_c (minutes)	100-year Flow Rates, Q_{100} (cfs [1])
100	199	Pre-project	17.2	15.3	22.3
		Post-project	16.5	12.9	29.8
200	299	Pre-project	61.0	15.9	77.7
		Post-project[2]	60.7	11.5	99.7
300	399	Pre-project	27.6	15.0	36.1
	398	Post-Project	32.3	10.9	90.2
	399	Post-project	7.2	10.3	19.8
400A	410	Pre-project	5.4	12.9	7.3
		Post-project[3]	0.0	-	-
400B	420	Pre-project	1.9	14.7	2.5
		Post-project[3]	0.0	-	-
500	550	Pre-project	14.3	16.3	18.0
		Post-project[3]	0.0	-	-
1400	1499	Pre-Project[4]	319.9	24.2	337
	1499	Post-Project[4]	346.1	22.9	429

Notes:

1. "cfs" = cubic feet per second
2. This rational method calculation uses a C value of 0.45 for offsite drainage areas tributary to Node 285. However, the storm drain downstream of Node 285 has been sized considering the ultimate condition. It is anticipated that when these areas are developed, they will include a detention analysis in order to route post-project flows back to pre-project conditions.
3. Post project are that drains to the landslide complex is diverted to Moody Canyon to the north. Basin 500 drains both to Moody Canyon and Spring Canyon in the ultimate developed condition.
4. The area tributary to Point of Interest Node 1499, in both the pre- and post-project condition, include the area from Basin 100, 200, and 300. The contributing Q100 from Basin 100, 200, and 300 in the post-project condition is calculated with the detained Q100.

3.0 HYDRAULICS

3.1 Hydraulic Methodology and Criteria

The 100-year post-project peak flow rates determined using the Modified Rational Method was used to size the on-site storm drain system. In addition, hydraulic analyses regarding preliminary inlet sizing calculations are included.

3.1.1 Storm Drain Sizing

Storm drainpipe sizes were determined based on a normal depth calculation to verify storm drain capacity based on Manning's equation.

$$Q= (1.486/n)\ A\ R^{2/3}\ S^{½}$$

Where:

Q = Discharge (cfs)

n = Manning's roughness coefficient

A = Cross-sectional Area of flow (sq. ft.)

R = Hydraulic radius (ft.) (where hydraulic radius is defined as the cross-section area of flow divide by the wetted perimeter, R= A/P)

S = Slope of pipe (ft./ft.)

The Manning's roughness coefficient "n" of 0.013 was used for the hydraulic calculations. This value is typically used for reinforced concrete pipe (RCP), polyvinyl chloride (PVC) and high-density polyethylene pipe (HDPE). The pipe sizes were evaluated based on the Rational Method flow rates with a 30% "bump up" sizing factor to account for hydraulic losses within the system.

Please refer to Appendix E for the preliminary storm drain sizes. The AES rational method results located in Appendix B of this report may be referenced for further information concerning pipe flow.

3.1.2 Inlet Design

Inlet design calculations were completed using a computer program based on the following equations for inlets on a grade and inlets in a sump:

Type B Inlets on a Grade

$$Q = 0.7 L (a + y)^{3/2}$$

Where:
y = depth of flow approaching the curb inlet, in feet (ft)
a = depth of depression of curb at inlet, in feet (ft)
L = length of clear opening of inlet for total interception, in feet (ft)
Q = interception capacity of the curb inlet, in cubic feet per second (cfs)

Type B Inlets in a Sump

$$Q/L = 1.5 \text{ cfs/ft}$$

Where:
Q = inlet capacity, in cubic feet per second (cfs)
L = length of clear opening of inlet for total interception, in feet (ft)

Inlet Results

Inlet locations have been identified for all of the basins within that comprise this project. Inlets have been sized for the 100-year, 6-hour storm event. Each inlet has been sized to provide 100% capture of the flow draining to the inlet, except where bypass flow occurs, a downstream inlet will be sized to capture the bypass flow. The inlet design calculations along with back up information has been presented in Appendix D. Refer to the drainage study map provided in Map Pocket 2 for the location of each inlet.

3.2 Moody Canyon Hydraulics

Hydraulic analyses for Moody Canyon were performed using flow rate, slope, and Manning's n data from the Modified Rational Method, and cross-sectional geometry was extracted from the topography of the Post Drainage Exhibit. This data was inputted and processed through the Hydraulic Toolbox v4.4, developed by the FHWA, which then produced an approximate water surface elevation. At the downstream entrance to the proposed culvert under Beyer Road inlet control calculations were performed to determine the head required to pass the 100-year flow rather through the proposed 54-inch pipe. Using this elevation and the water surface elevations determined from the normal depth calculations at each cross-section, an approximate floodplain for Moody Canyon has been drawn onto the Post-Project Drainage Map located in Map Pocket 2. Please also refer to Appendix I for additional backup.

4.0 DETENTION ANALYSES

For the design of detention facilities, the modified rational method hydrologic analysis was performed to determine the 100-year flow rates for both the pre-project condition and the post-project condition. Pre-project and post-project rational method output for the project is provided in Appendices A and B of this report.

4.1 Hydrograph Development

The sizing of a detention facility requires an inflow hydrograph to obtain the necessary storage volume. The modified rational method only yields a peak discharge and time of concentration and does not yield a hydrograph. In order to convert the peak discharge and time of concentration into a hydrograph, Rick Engineering's program, RatHydro was used. RatHydro generates a hydrograph from the following inputs: Time of concentration, 6-Hour Precipitation depth, basin area, rational method runoff coefficient, and peak discharge rate. The generated hydrograph can then be used as the inflow hydrograph for basin sizing within HEC-1.

4.3 HEC-1 Methodology and Criteria

100-year hydrographs and preliminary elevation-storage-outflow rating curves were used in the HEC-1 hydrologic model to perform routing calculations for the detention basin, and to determine the preliminary 100-year detention volumes required for the basin to reduce the post-project peak discharge rate back to the pre-project peak discharge rate. Actual storage and rating curves will be provided during final engineering along with detailed outlet-works designs for each BMP.

4.4 Detention Results

The 100-year, 6-hour post-project peak discharge rates were routed using the HEC-1 hydrologic model to determine the detention volume required for the vaults to reduce post-project peak discharge rates back to the pre-project peak discharge rates for select storm events. The HEC-1 detention analyses computer output is located in Appendix F of this report.

The proposed detention vaults are designed to include volumes to comply with hydromodification management criteria, in addition to directing water quality volumes towards proposed downstream Modular Wetlands units. Detention volume sizing is provided within the proposed StormTrap vaults. These vaults are designed to route the post-project peak discharge rate back to pre-project conditions at the project's POCs. In order to account for offsite drainage areas that are not being routed through the vaults, detention was analyzed at the vaults themselves rather than at the project's POCs. Post-Project detained hydrologic analyses that reflect detention occurring upstream from the project's POCs is included in Appendix B following the un-detained analyses. Refer to Map Pocket 2 of this report for an exhibit of vault locations and POC locations. Table 4.1 will provide a summary of the detention analysis.

Table 4.1 Detention Analysis Summary

BMP ID	NODE #	Pre-Project Q_{100} (cfs)	Post-Project Q_{100} (Un-Detained) (cfs)	Post-Project Q_{100} (Detained) (cfs)
BMP 1	180	21.3	29.8	18.4
BMP 2	290	76.1	99.7[1]	72.5[1]
BMP 14	1499	337	429	336

Note:

1. The post-project Q_{100} and post-project detained Q_{100} were calculated using a C value of 0.45 for offsite drainage areas that are tributary to POC 2 but are not being routed through the proposed detention vault.

5.0 CONCLUSION

This drainage study presents the hydrologic and hydraulic analyses for the Southwest Village VTM project in support of preliminary engineering. The pre-project and post-project condition peak discharge rates were determined using the Modified Rational Method based on the hydrologic methodology and criteria described in the City of San Diego Drainage Design Manual, January 2017.

The overall drainage characteristics in the post-project condition will remain similar as compared to the pre-project conditions for Basin 100 and 200, however, due to the proximity of the San Ysidro landslide complex, drainage has been diverted away from this area and either north to the proposed storm drain down Beyer Blvd. or south to Spring Canyon. It is currently anticipated that the project will result in an overall increase to impervious surfaces. As a result, the project as a whole will result in an increase in storm water runoff. Preliminary detention sizing is provided for the 100-year, 6-hour storm event so that post-project peak discharge rates are routed back to pre-project conditions using the HEC-1 hydrologic model. At this stage, it is not anticipated that the project will adversely impact the hydraulics of existing drainage systems located downstream of the project. The project will also include LID BMPs and Pollutant Control BMPs that will further reduce/slow runoff for post-project conditions.

The 100-year, 6-hour post-project peak flow rates were utilized to size the proposed drainage system, including preliminary sizing for proposed storm drain and inlets. Inlet locations have been identified and the detailed inlet sizing will be provided during final engineering. Riprap pad locations have been identified and their preliminary sizing has been provided schematically to help reduce velocities and minimize erosion. Please see the post-project Drainage Study Exhibit in Map Pocket 2. Riprap design calculations will be provided during final engineering.

Post-project runoff will be managed per the City of San Diego Storm Water Standards Manual, May 2021. Please refer to the report titled, “Priority Development Project (PDP) Storm Water Quality Management Plan (SWQMP) for Southwest Village VTM” dated December 16, 2022 (or any revision thereafter), prepared by Rick Engineering Company (Job No. 15013-C), for more information on water quality and HMP.

APPENDIX A

Modified Rational Method Output
[Pre-project]

```
****************************************************************************

            RATIONAL METHOD HYDROLOGY COMPUTER PROGRAM PACKAGE
            Reference: SAN DIEGO COUNTY FLOOD CONTROL DISTRICT
                         2003,1985,1981 HYDROLOGY MANUAL
         (c) Copyright 1982-2003 Advanced Engineering Software (aes)
             Ver. 1.5A Release Date: 01/01/2003  License ID 1261

                           Analysis prepared by:

                          RICK ENGINEERING COMPANY
                              5620 Friars Road
                        San Diego, California 92110
                      619-291-0707   Fax 619-291-4165

 ************************** DESCRIPTION OF STUDY **************************
* J-15013C SOUTH OTAY                                                      *
* 100-YEAR, 6-HOUR STORM EVENT                                             *
* BASIN 400A EXISTING CONDITION                                            *
 **************************************************************************

  FILE NAME: SOB400AE.RAT
  TIME/DATE OF STUDY: 16:42 01/25/2018
----------------------------------------------------------------------------
  USER SPECIFIED HYDROLOGY AND HYDRAULIC MODEL INFORMATION:
----------------------------------------------------------------------------
  USER SPECIFIED STORM EVENT(YEAR) = 100.00
  SPECIFIED MINIMUM PIPE SIZE(INCH) =  18.00
  SPECIFIED PERCENT OF GRADIENTS(DECIMAL) TO USE FOR FRICTION SLOPE = 0.90
  RAINFALL-INTENSITY ADJUSTMENT FACTOR = 1.000
  *USER SPECIFIED:
  NUMBER OF [TIME,INTENSITY] DATA PAIRS =  9
   1)   5.000;  4.400
   2)  10.000;  3.450
   3)  15.000;  2.900
   4)  20.000;  2.500
   5)  25.000;  2.200
   6)  30.000;  2.000
   7)  40.000;  1.700
   8)  50.000;  1.500
   9)  60.000;  1.300
  SAN DIEGO HYDROLOGY MANUAL "C"-VALUES USED FOR RATIONAL METHOD
  NOTE: ONLY PEAK CONFLUENCE VALUES CONSIDERED
  *USER-DEFINED STREET-SECTIONS FOR COUPLED PIPEFLOW AND STREETFLOW MODEL*
     HALF-  CROWN TO   STREET-CROSSFALL:   CURB  GUTTER-GEOMETRIES:  MANNING
     WIDTH  CROSSFALL  IN-  / OUT-/PARK-  HEIGHT  WIDTH  LIP   HIKE  FACTOR
NO.   (FT)     (FT)    SIDE / SIDE/ WAY    (FT)    (FT)  (FT)  (FT)    (n)
===  =====  =========  ================   ======  ===== ====== ===== =======
  1   30.0     20.0    0.018/0.018/0.020   0.67    2.00 0.0313 0.167 0.0150
  2   20.0     15.0    0.020/0.020/0.020   0.50    1.50 0.0100 0.125 0.0180

  GLOBAL STREET FLOW-DEPTH CONSTRAINTS:
    1. Relative Flow-Depth = -0.10 FEET
       as (Maximum Allowable Street Flow Depth) - (Top-of-Curb)
    2. (Depth)*(Velocity) Constraint =  6.0 (FT*FT/S)
  *SIZE PIPE WITH A FLOW CAPACITY GREATER THAN
   OR EQUAL TO THE UPSTREAM TRIBUTARY PIPE.*
```

```
****************************************************************************
  FLOW PROCESS FROM NODE    400.00 TO NODE    401.00 IS CODE =  21
----------------------------------------------------------------------------
  >>>>>RATIONAL METHOD INITIAL SUBAREA ANALYSIS<<<<<
============================================================================
  RURAL DEVELOPMENT RUNOFF COEFFICIENT = .4500
  SOIL CLASSIFICATION IS "D"
  S.C.S. CURVE NUMBER (AMC II) =  87
  INITIAL SUBAREA FLOW-LENGTH(FEET) =   112.00
  UPSTREAM ELEVATION(FEET) =    502.00
  DOWNSTREAM ELEVATION(FEET) =    500.00
  ELEVATION DIFFERENCE(FEET) =      2.00
  URBAN SUBAREA OVERLAND TIME OF FLOW(MIN.) =   10.206
   100 YEAR RAINFALL INTENSITY(INCH/HOUR) =  3.427
  SUBAREA RUNOFF(CFS) =      0.31
  TOTAL AREA(ACRES) =      0.20   TOTAL RUNOFF(CFS) =      0.31

****************************************************************************
  FLOW PROCESS FROM NODE    401.00 TO NODE    410.00 IS CODE =  51
----------------------------------------------------------------------------
  >>>>>COMPUTE TRAPEZOIDAL CHANNEL FLOW<<<<<
  >>>>>TRAVELTIME THRU SUBAREA (EXISTING ELEMENT)<<<<<
============================================================================
  ELEVATION DATA: UPSTREAM(FEET) =    500.00  DOWNSTREAM(FEET) =    478.00
  CHANNEL LENGTH THRU SUBAREA(FEET) =   507.00   CHANNEL SLOPE =  0.0434
  CHANNEL BASE(FEET) =    5.00   "Z" FACTOR =  10.000
  MANNING'S FACTOR = 0.025   MAXIMUM DEPTH(FEET) =  10.00
   100 YEAR RAINFALL INTENSITY(INCH/HOUR) =  3.127
  RURAL DEVELOPMENT RUNOFF COEFFICIENT = .4500
  SOIL CLASSIFICATION IS "D"
  S.C.S. CURVE NUMBER (AMC II) =  87
  TRAVEL TIME COMPUTED USING ESTIMATED FLOW(CFS) =      3.35
  TRAVEL TIME THRU SUBAREA BASED ON VELOCITY(FEET/SEC.) =   3.10
  AVERAGE FLOW DEPTH(FEET) =   0.16   TRAVEL TIME(MIN.) =   2.73
  Tc(MIN.) =  12.93
  SUBAREA AREA(ACRES) =     4.30       SUBAREA RUNOFF(CFS) =    6.05
  TOTAL AREA(ACRES) =      4.50         PEAK FLOW RATE(CFS) =       6.36

  END OF SUBAREA CHANNEL FLOW HYDRAULICS:
  DEPTH(FEET) =  0.23   FLOW VELOCITY(FEET/SEC.) =   3.88
  LONGEST FLOWPATH FROM NODE    400.00 TO NODE    410.00 =   619.00 FEET.

****************************************************************************
  FLOW PROCESS FROM NODE    410.00 TO NODE    410.00 IS CODE =  81
----------------------------------------------------------------------------
  >>>>>ADDITION OF SUBAREA TO MAINLINE PEAK FLOW<<<<<
============================================================================
   100 YEAR RAINFALL INTENSITY(INCH/HOUR) =  3.127
  RURAL DEVELOPMENT RUNOFF COEFFICIENT = .4500
  SOIL CLASSIFICATION IS "D"
  S.C.S. CURVE NUMBER (AMC II) =  87
  SUBAREA AREA(ACRES) =    0.90   SUBAREA RUNOFF(CFS) =    1.27
  TOTAL AREA(ACRES) =      5.40   TOTAL RUNOFF(CFS) =    7.63
  TC(MIN.) =  12.93
============================================================================
  END OF STUDY SUMMARY:
  TOTAL AREA(ACRES)     =      5.40  TC(MIN.) =     12.93
```

```
  PEAK FLOW RATE(CFS)   =      7.63
============================================================================
============================================================================
  END OF RATIONAL METHOD ANALYSIS
```

```
****************************************************************************

            RATIONAL METHOD HYDROLOGY COMPUTER PROGRAM PACKAGE
            Reference: SAN DIEGO COUNTY FLOOD CONTROL DISTRICT
                         2003,1985,1981 HYDROLOGY MANUAL
         (c) Copyright 1982-2003 Advanced Engineering Software (aes)
             Ver. 1.5A Release Date: 01/01/2003  License ID 1261

                           Analysis prepared by:

                          RICK ENGINEERING COMPANY
                              5620 Friars Road
                        San Diego, California 92110
                      619-291-0707   Fax 619-291-4165

 ************************** DESCRIPTION OF STUDY **************************
* J-15013C SOUTH OTAY                                                      *
* 100-YEAR, 6-HOUR STORM EVENT                                             *
* BASIN 400B EXISTING CONDITION                                            *
 **************************************************************************

  FILE NAME: SOB400BE.RAT
  TIME/DATE OF STUDY: 16:47 01/25/2018
----------------------------------------------------------------------------
  USER SPECIFIED HYDROLOGY AND HYDRAULIC MODEL INFORMATION:
----------------------------------------------------------------------------
  USER SPECIFIED STORM EVENT(YEAR) = 100.00
  SPECIFIED MINIMUM PIPE SIZE(INCH) =  18.00
  SPECIFIED PERCENT OF GRADIENTS(DECIMAL) TO USE FOR FRICTION SLOPE = 0.90
  RAINFALL-INTENSITY ADJUSTMENT FACTOR = 1.000
  *USER SPECIFIED:
  NUMBER OF [TIME,INTENSITY] DATA PAIRS =  9
   1)   5.000;  4.400
   2)  10.000;  3.450
   3)  15.000;  2.900
   4)  20.000;  2.500
   5)  25.000;  2.200
   6)  30.000;  2.000
   7)  40.000;  1.700
   8)  50.000;  1.500
   9)  60.000;  1.300
  SAN DIEGO HYDROLOGY MANUAL "C"-VALUES USED FOR RATIONAL METHOD
  NOTE: ONLY PEAK CONFLUENCE VALUES CONSIDERED
  *USER-DEFINED STREET-SECTIONS FOR COUPLED PIPEFLOW AND STREETFLOW MODEL*
     HALF-  CROWN TO   STREET-CROSSFALL:   CURB  GUTTER-GEOMETRIES:  MANNING
     WIDTH  CROSSFALL  IN-  / OUT-/PARK-  HEIGHT  WIDTH  LIP   HIKE  FACTOR
NO.   (FT)     (FT)    SIDE / SIDE/ WAY    (FT)    (FT)  (FT)  (FT)    (n)
===  =====  =========  ================  ======  =====  ====== ===== =======
  1   30.0     20.0    0.018/0.018/0.020   0.67    2.00 0.0313 0.167 0.0150
  2   20.0     15.0    0.020/0.020/0.020   0.50    1.50 0.0100 0.125 0.0180

  GLOBAL STREET FLOW-DEPTH CONSTRAINTS:
    1. Relative Flow-Depth = -0.10 FEET
       as (Maximum Allowable Street Flow Depth) - (Top-of-Curb)
    2. (Depth)*(Velocity) Constraint =  6.0 (FT*FT/S)
  *SIZE PIPE WITH A FLOW CAPACITY GREATER THAN
   OR EQUAL TO THE UPSTREAM TRIBUTARY PIPE.*
```

```
****************************************************************************
  FLOW PROCESS FROM NODE    400.00 TO NODE    402.00 IS CODE =  21
----------------------------------------------------------------------------
  >>>>>RATIONAL METHOD INITIAL SUBAREA ANALYSIS<<<<<
============================================================================
  RURAL DEVELOPMENT RUNOFF COEFFICIENT = .4500
  SOIL CLASSIFICATION IS "D"
  S.C.S. CURVE NUMBER (AMC II) =  87
  INITIAL SUBAREA FLOW-LENGTH(FEET) =   107.00
  UPSTREAM ELEVATION(FEET) =    502.00
  DOWNSTREAM ELEVATION(FEET) =    501.00
  ELEVATION DIFFERENCE(FEET) =      1.00
  URBAN SUBAREA OVERLAND TIME OF FLOW(MIN.) =   12.379
   100 YEAR RAINFALL INTENSITY(INCH/HOUR) =  3.188
  SUBAREA RUNOFF(CFS) =      0.14
  TOTAL AREA(ACRES) =      0.10   TOTAL RUNOFF(CFS) =      0.14

****************************************************************************
  FLOW PROCESS FROM NODE    402.00 TO NODE    420.00 IS CODE =  51
----------------------------------------------------------------------------
  >>>>>COMPUTE TRAPEZOIDAL CHANNEL FLOW<<<<<
  >>>>>TRAVELTIME THRU SUBAREA (EXISTING ELEMENT)<<<<<
============================================================================
  ELEVATION DATA: UPSTREAM(FEET) =    501.00  DOWNSTREAM(FEET) =    488.00
  CHANNEL LENGTH THRU SUBAREA(FEET) =   319.00   CHANNEL SLOPE =  0.0408
  CHANNEL BASE(FEET) =    5.00   "Z" FACTOR =  10.000
  MANNING'S FACTOR = 0.025   MAXIMUM DEPTH(FEET) =  10.00
   100 YEAR RAINFALL INTENSITY(INCH/HOUR) =  2.936
  RURAL DEVELOPMENT RUNOFF COEFFICIENT = .4500
  SOIL CLASSIFICATION IS "D"
  S.C.S. CURVE NUMBER (AMC II) =  87
  TRAVEL TIME COMPUTED USING ESTIMATED FLOW(CFS) =      1.33
  TRAVEL TIME THRU SUBAREA BASED ON VELOCITY(FEET/SEC.) =   2.32
  AVERAGE FLOW DEPTH(FEET) =   0.10   TRAVEL TIME(MIN.) =   2.29
  Tc(MIN.) =  14.67
  SUBAREA AREA(ACRES) =     1.80       SUBAREA RUNOFF(CFS) =    2.38
  TOTAL AREA(ACRES) =      1.90         PEAK FLOW RATE(CFS) =       2.52

  END OF SUBAREA CHANNEL FLOW HYDRAULICS:
  DEPTH(FEET) =  0.14   FLOW VELOCITY(FEET/SEC.) =   2.81
  LONGEST FLOWPATH FROM NODE    400.00 TO NODE    420.00 =   426.00 FEET.
============================================================================
  END OF STUDY SUMMARY:
  TOTAL AREA(ACRES)     =      1.90  TC(MIN.) =     14.67
  PEAK FLOW RATE(CFS)   =      2.52
============================================================================
============================================================================
  END OF RATIONAL METHOD ANALYSIS
```

```
****************************************************************************

            RATIONAL METHOD HYDROLOGY COMPUTER PROGRAM PACKAGE
            Reference: SAN DIEGO COUNTY FLOOD CONTROL DISTRICT
                         2003,1985,1981 HYDROLOGY MANUAL
         (c) Copyright 1982-2003 Advanced Engineering Software (aes)
             Ver. 1.5A Release Date: 01/01/2003  License ID 1261

                           Analysis prepared by:

                          RICK ENGINEERING COMPANY
                              5620 Friars Road
                        San Diego, California 92110
                      619-291-0707   Fax 619-291-4165

 ************************** DESCRIPTION OF STUDY **************************
* J-15013C SOUTH OTAY                                                      *
* 100-YEAR, 6-HOUR STORM EVENT                                             *
* BASIN 500 EXISTING CONDITION                                             *
 **************************************************************************

  FILE NAME: SS05HE00.RAT
  TIME/DATE OF STUDY: 08:26 02/13/2018
----------------------------------------------------------------------------
  USER SPECIFIED HYDROLOGY AND HYDRAULIC MODEL INFORMATION:
----------------------------------------------------------------------------
  USER SPECIFIED STORM EVENT(YEAR) = 100.00
  SPECIFIED MINIMUM PIPE SIZE(INCH) =  18.00
  SPECIFIED PERCENT OF GRADIENTS(DECIMAL) TO USE FOR FRICTION SLOPE = 0.90
  RAINFALL-INTENSITY ADJUSTMENT FACTOR = 1.000
  *USER SPECIFIED:
  NUMBER OF [TIME,INTENSITY] DATA PAIRS =  9
   1)   5.000;  4.400
   2)  10.000;  3.450
   3)  15.000;  2.900
   4)  20.000;  2.500
   5)  25.000;  2.200
   6)  30.000;  2.000
   7)  40.000;  1.700
   8)  50.000;  1.500
   9)  60.000;  1.300
  SAN DIEGO HYDROLOGY MANUAL "C"-VALUES USED FOR RATIONAL METHOD
  NOTE: ONLY PEAK CONFLUENCE VALUES CONSIDERED
  *USER-DEFINED STREET-SECTIONS FOR COUPLED PIPEFLOW AND STREETFLOW MODEL*
     HALF-  CROWN TO   STREET-CROSSFALL:   CURB  GUTTER-GEOMETRIES:  MANNING
     WIDTH  CROSSFALL  IN-  / OUT-/PARK-  HEIGHT  WIDTH  LIP   HIKE  FACTOR
NO.   (FT)     (FT)    SIDE / SIDE/ WAY    (FT)    (FT)  (FT)  (FT)    (n)
===  =====  =========  ================  ======  ===== ====== ===== =======
  1   30.0     20.0    0.018/0.018/0.020   0.67    2.00 0.0313 0.167 0.0150
  2   20.0     15.0    0.020/0.020/0.020   0.50    1.50 0.0100 0.125 0.0180

  GLOBAL STREET FLOW-DEPTH CONSTRAINTS:
    1. Relative Flow-Depth = -0.10 FEET
       as (Maximum Allowable Street Flow Depth) - (Top-of-Curb)
    2. (Depth)*(Velocity) Constraint =  6.0 (FT*FT/S)
  *SIZE PIPE WITH A FLOW CAPACITY GREATER THAN
   OR EQUAL TO THE UPSTREAM TRIBUTARY PIPE.*
```

```
****************************************************************************
  FLOW PROCESS FROM NODE    500.00 TO NODE    501.00 IS CODE =  21
----------------------------------------------------------------------------
  >>>>>RATIONAL METHOD INITIAL SUBAREA ANALYSIS<<<<<
============================================================================
  RURAL DEVELOPMENT RUNOFF COEFFICIENT = .4500
  SOIL CLASSIFICATION IS "D"
  S.C.S. CURVE NUMBER (AMC II) =  87
  INITIAL SUBAREA FLOW-LENGTH(FEET) =   118.00
  UPSTREAM ELEVATION(FEET) =    499.00
  DOWNSTREAM ELEVATION(FEET) =    498.00
  ELEVATION DIFFERENCE(FEET) =      1.00
  URBAN SUBAREA OVERLAND TIME OF FLOW(MIN.) =   13.430
   100 YEAR RAINFALL INTENSITY(INCH/HOUR) =  3.073
  SUBAREA RUNOFF(CFS) =      0.41
  TOTAL AREA(ACRES) =      0.30   TOTAL RUNOFF(CFS) =      0.41

****************************************************************************
  FLOW PROCESS FROM NODE    501.00 TO NODE    550.00 IS CODE =  51
----------------------------------------------------------------------------
  >>>>>COMPUTE TRAPEZOIDAL CHANNEL FLOW<<<<<
  >>>>>TRAVELTIME THRU SUBAREA (EXISTING ELEMENT)<<<<<
============================================================================
  ELEVATION DATA: UPSTREAM(FEET) =    498.00  DOWNSTREAM(FEET) =    475.00
  CHANNEL LENGTH THRU SUBAREA(FEET) =   688.00   CHANNEL SLOPE =  0.0334
  CHANNEL BASE(FEET) =    5.00   "Z" FACTOR =  10.000
  MANNING'S FACTOR = 0.025   MAXIMUM DEPTH(FEET) =  10.00
   100 YEAR RAINFALL INTENSITY(INCH/HOUR) =  2.793
  RURAL DEVELOPMENT RUNOFF COEFFICIENT = .4500
  SOIL CLASSIFICATION IS "D"
  S.C.S. CURVE NUMBER (AMC II) =  87
  TRAVEL TIME COMPUTED USING ESTIMATED FLOW(CFS) =      9.23
  TRAVEL TIME THRU SUBAREA BASED ON VELOCITY(FEET/SEC.) =   3.94
  AVERAGE FLOW DEPTH(FEET) =   0.29   TRAVEL TIME(MIN.) =   2.91
  Tc(MIN.) =  16.34
  SUBAREA AREA(ACRES) =    14.00       SUBAREA RUNOFF(CFS) =   17.59
  TOTAL AREA(ACRES) =     14.30         PEAK FLOW RATE(CFS) =      18.01

  END OF SUBAREA CHANNEL FLOW HYDRAULICS:
  DEPTH(FEET) =  0.42   FLOW VELOCITY(FEET/SEC.) =   4.71
  LONGEST FLOWPATH FROM NODE    500.00 TO NODE    510.00 =   806.00 FEET.
============================================================================
  END OF STUDY SUMMARY:
  TOTAL AREA(ACRES)     =     14.30  TC(MIN.) =     16.34
  PEAK FLOW RATE(CFS)   =     18.01
============================================================================
============================================================================
  END OF RATIONAL METHOD ANALYSIS
```

```
****************************************************************************

            RATIONAL METHOD HYDROLOGY COMPUTER PROGRAM PACKAGE
            Reference: SAN DIEGO COUNTY FLOOD CONTROL DISTRICT
                         2003,1985,1981 HYDROLOGY MANUAL
         (c) Copyright 1982-2014 Advanced Engineering Software (aes)
             Ver. 21.0 Release Date: 06/01/2014  License ID 1261

                           Analysis prepared by:

                          RICK ENGINEERING COMPANY
                              5620 Friars Road
                        San Diego, California 92110
                      619-291-0707   Fax 619-291-4165

 ************************** DESCRIPTION OF STUDY **************************
* J-15013C SOUTHWEST VILLAGE                                               *
* 100-YEAR, 6-HOUR STORM EVENT                                             *
* BASIN 1400 - BEYER BLVD PRE-PROJECT                                      *
 **************************************************************************

  FILE NAME: S1014E00.RAT
  TIME/DATE OF STUDY: 12:46 02/17/2022
----------------------------------------------------------------------------
  USER SPECIFIED HYDROLOGY AND HYDRAULIC MODEL INFORMATION:
----------------------------------------------------------------------------
  USER SPECIFIED STORM EVENT(YEAR) = 100.00
  SPECIFIED MINIMUM PIPE SIZE(INCH) =  18.00
  SPECIFIED PERCENT OF GRADIENTS(DECIMAL) TO USE FOR FRICTION SLOPE = 0.90
  RAINFALL-INTENSITY ADJUSTMENT FACTOR = 1.000
  *USER SPECIFIED:
  NUMBER OF [TIME,INTENSITY] DATA PAIRS =  9
   1)   5.000;  4.400
   2)  10.000;  3.450
   3)  15.000;  2.900
   4)  20.000;  2.500
   5)  25.000;  2.200
   6)  30.000;  2.000
   7)  40.000;  1.700
   8)  50.000;  1.500
   9)  60.000;  1.300
  SAN DIEGO HYDROLOGY MANUAL "C"-VALUES USED FOR RATIONAL METHOD
  NOTE: ONLY PEAK CONFLUENCE VALUES CONSIDERED
  *USER-DEFINED STREET-SECTIONS FOR COUPLED PIPEFLOW AND STREETFLOW MODEL*
     HALF-  CROWN TO   STREET-CROSSFALL:   CURB  GUTTER-GEOMETRIES:  MANNING
     WIDTH  CROSSFALL  IN-  / OUT-/PARK-  HEIGHT  WIDTH  LIP   HIKE  FACTOR
NO.   (FT)     (FT)    SIDE / SIDE/ WAY    (FT)    (FT)  (FT)  (FT)    (n)
===  =====  =========  ================  ======  ===== ====== ===== =======
  1   30.0     20.0    0.018/0.018/0.020   0.67    2.00 0.0313 0.167 0.0150
  2   20.0     15.0    0.020/0.020/0.020   0.50    1.50 0.0100 0.125 0.0180

  GLOBAL STREET FLOW-DEPTH CONSTRAINTS:
    1. Relative Flow-Depth = -0.10 FEET
       as (Maximum Allowable Street Flow Depth) - (Top-of-Curb)
    2. (Depth)*(Velocity) Constraint =  6.0 (FT*FT/S)
  *SIZE PIPE WITH A FLOW CAPACITY GREATER THAN
   OR EQUAL TO THE UPSTREAM TRIBUTARY PIPE.*
```

```
****************************************************************************
  FLOW PROCESS FROM NODE   1400.00 TO NODE   1401.00 IS CODE =  22
----------------------------------------------------------------------------
  >>>>>RATIONAL METHOD INITIAL SUBAREA ANALYSIS<<<<<
============================================================================
  *USER SPECIFIED(SUBAREA):
  RESIDENTIAL (1. DU/AC OR LESS) RUNOFF COEFFICIENT = .7000
  S.C.S. CURVE NUMBER (AMC II) =   0
  USER SPECIFIED Tc(MIN.) =    5.000
   100 YEAR RAINFALL INTENSITY(INCH/HOUR) =  4.400
  SUBAREA RUNOFF(CFS) =      0.92
  TOTAL AREA(ACRES) =      0.30   TOTAL RUNOFF(CFS) =      0.92

****************************************************************************
  FLOW PROCESS FROM NODE   1401.00 TO NODE   1402.00 IS CODE =  62
----------------------------------------------------------------------------
  >>>>>COMPUTE STREET FLOW TRAVEL TIME THRU SUBAREA<<<<<
  >>>>>(STREET TABLE SECTION #  2 USED)<<<<<
============================================================================
  UPSTREAM ELEVATION(FEET) =  100.00  DOWNSTREAM ELEVATION(FEET) =   83.00
  STREET LENGTH(FEET) =   850.00   CURB HEIGHT(INCHES) =  6.0
  STREET HALFWIDTH(FEET) = 20.00

  DISTANCE FROM CROWN TO CROSSFALL GRADEBREAK(FEET) =  15.00
  INSIDE STREET CROSSFALL(DECIMAL) =  0.020
  OUTSIDE STREET CROSSFALL(DECIMAL)  =  0.020

  SPECIFIED NUMBER OF HALFSTREETS CARRYING RUNOFF =  2
  STREET PARKWAY CROSSFALL(DECIMAL)  =  0.020
  Manning's FRICTION FACTOR for Streetflow Section(curb-to-curb) =   0.0180
  Manning's FRICTION FACTOR for Back-of-Walk Flow Section =   0.0200

    **TRAVEL TIME COMPUTED USING ESTIMATED FLOW(CFS) =      17.65
    STREETFLOW MODEL RESULTS USING ESTIMATED FLOW:
    STREET FLOW DEPTH(FEET) =  0.42
    HALFSTREET FLOOD WIDTH(FEET) =   15.81
    AVERAGE FLOW VELOCITY(FEET/SEC.) =    3.41
    PRODUCT OF DEPTH&VELOCITY(FT*FT/SEC.) =    1.44
  STREET FLOW TRAVEL TIME(MIN.) =   4.15   Tc(MIN.) =    9.15
   100 YEAR RAINFALL INTENSITY(INCH/HOUR) =  3.611
  *USER SPECIFIED(SUBAREA):
  RESIDENTIAL (1. DU/AC OR LESS) RUNOFF COEFFICIENT = .7000
  S.C.S. CURVE NUMBER (AMC II) =   0
  AREA-AVERAGE RUNOFF COEFFICIENT =  0.700
  SUBAREA AREA(ACRES) =   13.10      SUBAREA RUNOFF(CFS) =   33.11
  TOTAL AREA(ACRES) =       13.4        PEAK FLOW RATE(CFS) =      33.87

  END OF SUBAREA STREET FLOW HYDRAULICS:
  DEPTH(FEET) = 0.51   HALFSTREET FLOOD WIDTH(FEET) =  20.52
  FLOW VELOCITY(FEET/SEC.) =  4.03   DEPTH*VELOCITY(FT*FT/SEC.) =   2.06
  *NOTE: INITIAL SUBAREA NOMOGRAPH WITH SUBAREA PARAMETERS,
         AND L =  850.0 FT WITH ELEVATION-DROP =  17.0 FT, IS   39.9 CFS,
         WHICH EXCEEDS THE TOP-OF-CURB STREET CAPACITY AT NODE   1402.00
  LONGEST FLOWPATH FROM NODE   1400.00 TO NODE   1402.00 =     850.00 FEET.

****************************************************************************
  FLOW PROCESS FROM NODE   1402.00 TO NODE   1404.00 IS CODE =  51
```

```
----------------------------------------------------------------------------
  >>>>>COMPUTE TRAPEZOIDAL CHANNEL FLOW<<<<<
  >>>>>TRAVELTIME THRU SUBAREA (EXISTING ELEMENT)<<<<<
============================================================================
  ELEVATION DATA: UPSTREAM(FEET) =    100.00  DOWNSTREAM(FEET) =     43.00
  CHANNEL LENGTH THRU SUBAREA(FEET) =   950.00   CHANNEL SLOPE =  0.0600
  CHANNEL BASE(FEET) =   10.00   "Z" FACTOR =   4.000
  MANNING'S FACTOR = 0.035   MAXIMUM DEPTH(FEET) =  10.00
   100 YEAR RAINFALL INTENSITY(INCH/HOUR) =  3.275
  *USER SPECIFIED(SUBAREA):
  RESIDENTIAL (1. DU/AC OR LESS) RUNOFF COEFFICIENT = .4800
  S.C.S. CURVE NUMBER (AMC II) =   0
  TRAVEL TIME COMPUTED USING ESTIMATED FLOW(CFS) =      47.53
  TRAVEL TIME THRU SUBAREA BASED ON VELOCITY(FEET/SEC.) =   6.49
  AVERAGE FLOW DEPTH(FEET) =   0.59   TRAVEL TIME(MIN.) =   2.44
  Tc(MIN.) =   11.59
  SUBAREA AREA(ACRES) =    17.30       SUBAREA RUNOFF(CFS) =   27.19
  AREA-AVERAGE RUNOFF COEFFICIENT =  0.576
  TOTAL AREA(ACRES) =       30.7         PEAK FLOW RATE(CFS) =      57.91

  END OF SUBAREA CHANNEL FLOW HYDRAULICS:
  DEPTH(FEET) =  0.66   FLOW VELOCITY(FEET/SEC.) =   6.93
  LONGEST FLOWPATH FROM NODE   1400.00 TO NODE   1404.00 =    1800.00 FEET.

****************************************************************************
  FLOW PROCESS FROM NODE   1404.00 TO NODE   1404.00 IS CODE =  81
----------------------------------------------------------------------------
  >>>>>ADDITION OF SUBAREA TO MAINLINE PEAK FLOW<<<<<
============================================================================
   100 YEAR RAINFALL INTENSITY(INCH/HOUR) =  3.275
  *USER SPECIFIED(SUBAREA):
  RESIDENTIAL (1. DU/AC OR LESS) RUNOFF COEFFICIENT = .8000
  S.C.S. CURVE NUMBER (AMC II) =   0
  AREA-AVERAGE RUNOFF COEFFICIENT = 0.6085
  SUBAREA AREA(ACRES) =    5.20   SUBAREA RUNOFF(CFS) =   13.62
  TOTAL AREA(ACRES) =       35.9   TOTAL RUNOFF(CFS) =      71.54
  TC(MIN.) =   11.59

****************************************************************************
  FLOW PROCESS FROM NODE   1404.00 TO NODE   1405.00 IS CODE =  51
----------------------------------------------------------------------------
  >>>>>COMPUTE TRAPEZOIDAL CHANNEL FLOW<<<<<
  >>>>>TRAVELTIME THRU SUBAREA (EXISTING ELEMENT)<<<<<
============================================================================
  ELEVATION DATA: UPSTREAM(FEET) =    100.00  DOWNSTREAM(FEET) =     43.40
  CHANNEL LENGTH THRU SUBAREA(FEET) =  1415.00   CHANNEL SLOPE =  0.0400
  CHANNEL BASE(FEET) =   10.00   "Z" FACTOR =   4.000
  MANNING'S FACTOR = 0.035   MAXIMUM DEPTH(FEET) =  10.00
   100 YEAR RAINFALL INTENSITY(INCH/HOUR) =  2.896
  *USER SPECIFIED(SUBAREA):
  RESIDENTIAL (1. DU/AC OR LESS) RUNOFF COEFFICIENT = .4500
  S.C.S. CURVE NUMBER (AMC II) =   0
  TRAVEL TIME COMPUTED USING ESTIMATED FLOW(CFS) =      87.49
  TRAVEL TIME THRU SUBAREA BASED ON VELOCITY(FEET/SEC.) =   6.82
  AVERAGE FLOW DEPTH(FEET) =   0.93   TRAVEL TIME(MIN.) =   3.46
  Tc(MIN.) =   15.05
  SUBAREA AREA(ACRES) =    24.40       SUBAREA RUNOFF(CFS) =   31.80
  AREA-AVERAGE RUNOFF COEFFICIENT =  0.544
```

```
  TOTAL AREA(ACRES) =       60.3         PEAK FLOW RATE(CFS) =      95.06

  END OF SUBAREA CHANNEL FLOW HYDRAULICS:
  DEPTH(FEET) =  0.97   FLOW VELOCITY(FEET/SEC.) =   7.03
  LONGEST FLOWPATH FROM NODE   1400.00 TO NODE   1405.00 =    3215.00 FEET.

****************************************************************************
  FLOW PROCESS FROM NODE   1405.00 TO NODE   1405.00 IS CODE =   1
----------------------------------------------------------------------------
  >>>>>DESIGNATE INDEPENDENT STREAM FOR CONFLUENCE<<<<<
============================================================================
  TOTAL NUMBER OF STREAMS =  2
  CONFLUENCE VALUES USED FOR INDEPENDENT STREAM  1 ARE:
  TIME OF CONCENTRATION(MIN.) =   15.05
  RAINFALL INTENSITY(INCH/HR) =   2.90
  TOTAL STREAM AREA(ACRES) =    60.30
  PEAK FLOW RATE(CFS) AT CONFLUENCE =     95.06

****************************************************************************
  FLOW PROCESS FROM NODE    100.00 TO NODE    101.00 IS CODE =  21
----------------------------------------------------------------------------
  >>>>>RATIONAL METHOD INITIAL SUBAREA ANALYSIS<<<<<
============================================================================
  *USER SPECIFIED(SUBAREA):
  RESIDENTIAL (1. DU/AC OR LESS) RUNOFF COEFFICIENT = .4500
  S.C.S. CURVE NUMBER (AMC II) =   0
  INITIAL SUBAREA FLOW-LENGTH(FEET) =   100.00
  UPSTREAM ELEVATION(FEET) =    100.00
  DOWNSTREAM ELEVATION(FEET) =     98.00
  ELEVATION DIFFERENCE(FEET) =      2.00
  URBAN SUBAREA OVERLAND TIME OF FLOW(MIN.) =    8.562
  WARNING: INITIAL SUBAREA FLOW PATH LENGTH IS GREATER THAN
           THE MAXIMUM OVERLAND FLOW LENGTH =    85.00
           (Reference: Table 3-1B of Hydrology Manual)
           THE MAXIMUM OVERLAND FLOW LENGTH IS USED IN Tc CALCULATION!
   100 YEAR RAINFALL INTENSITY(INCH/HOUR) =  3.723
  SUBAREA RUNOFF(CFS) =      0.50
  TOTAL AREA(ACRES) =      0.30   TOTAL RUNOFF(CFS) =      0.50

****************************************************************************
  FLOW PROCESS FROM NODE    101.00 TO NODE    110.00 IS CODE =  51
----------------------------------------------------------------------------
  >>>>>COMPUTE TRAPEZOIDAL CHANNEL FLOW<<<<<
  >>>>>TRAVELTIME THRU SUBAREA (EXISTING ELEMENT)<<<<<
============================================================================
  ELEVATION DATA: UPSTREAM(FEET) =    100.00  DOWNSTREAM(FEET) =     76.00
  CHANNEL LENGTH THRU SUBAREA(FEET) =   600.00   CHANNEL SLOPE =  0.0400
  CHANNEL BASE(FEET) =    5.00   "Z" FACTOR =  10.000
  MANNING'S FACTOR = 0.035   MAXIMUM DEPTH(FEET) =  10.00
   100 YEAR RAINFALL INTENSITY(INCH/HOUR) =  3.203
  *USER SPECIFIED(SUBAREA):
  RESIDENTIAL (1. DU/AC OR LESS) RUNOFF COEFFICIENT = .4500
  S.C.S. CURVE NUMBER (AMC II) =   0
  TRAVEL TIME COMPUTED USING ESTIMATED FLOW(CFS) =       4.85
  TRAVEL TIME THRU SUBAREA BASED ON VELOCITY(FEET/SEC.) =   2.71
  AVERAGE FLOW DEPTH(FEET) =   0.24   TRAVEL TIME(MIN.) =   3.69
  Tc(MIN.) =   12.25
  SUBAREA AREA(ACRES) =     6.00       SUBAREA RUNOFF(CFS) =    8.65
```

```
  AREA-AVERAGE RUNOFF COEFFICIENT =  0.450
  TOTAL AREA(ACRES) =        6.3         PEAK FLOW RATE(CFS) =       9.08

  END OF SUBAREA CHANNEL FLOW HYDRAULICS:
  DEPTH(FEET) =  0.33   FLOW VELOCITY(FEET/SEC.) =   3.28
  LONGEST FLOWPATH FROM NODE    100.00 TO NODE    110.00 =     700.00 FEET.

****************************************************************************
  FLOW PROCESS FROM NODE    110.00 TO NODE    120.00 IS CODE =  51
----------------------------------------------------------------------------
  >>>>>COMPUTE TRAPEZOIDAL CHANNEL FLOW<<<<<
  >>>>>TRAVELTIME THRU SUBAREA (EXISTING ELEMENT)<<<<<
============================================================================
  ELEVATION DATA: UPSTREAM(FEET) =    100.00  DOWNSTREAM(FEET) =     92.00
  CHANNEL LENGTH THRU SUBAREA(FEET) =   200.00   CHANNEL SLOPE =  0.0400
  CHANNEL BASE(FEET) =   10.00   "Z" FACTOR =   4.000
  MANNING'S FACTOR = 0.035   MAXIMUM DEPTH(FEET) =  10.00
   100 YEAR RAINFALL INTENSITY(INCH/HOUR) =  3.091
  *USER SPECIFIED(SUBAREA):
  RESIDENTIAL (1. DU/AC OR LESS) RUNOFF COEFFICIENT = .4500
  S.C.S. CURVE NUMBER (AMC II) =   0
  TRAVEL TIME COMPUTED USING ESTIMATED FLOW(CFS) =       9.57
  TRAVEL TIME THRU SUBAREA BASED ON VELOCITY(FEET/SEC.) =   3.28
  AVERAGE FLOW DEPTH(FEET) =   0.26   TRAVEL TIME(MIN.) =   1.02
  Tc(MIN.) =   13.27
  SUBAREA AREA(ACRES) =     0.70       SUBAREA RUNOFF(CFS) =    0.97
  AREA-AVERAGE RUNOFF COEFFICIENT =  0.450
  TOTAL AREA(ACRES) =        7.0         PEAK FLOW RATE(CFS) =       9.74

  END OF SUBAREA CHANNEL FLOW HYDRAULICS:
  DEPTH(FEET) =  0.26   FLOW VELOCITY(FEET/SEC.) =   3.33
  LONGEST FLOWPATH FROM NODE    100.00 TO NODE    120.00 =     900.00 FEET.

****************************************************************************
  FLOW PROCESS FROM NODE    120.00 TO NODE    120.00 IS CODE =  81
----------------------------------------------------------------------------
  >>>>>ADDITION OF SUBAREA TO MAINLINE PEAK FLOW<<<<<
============================================================================
   100 YEAR RAINFALL INTENSITY(INCH/HOUR) =  3.091
  *USER SPECIFIED(SUBAREA):
  RESIDENTIAL (1. DU/AC OR LESS) RUNOFF COEFFICIENT = .4500
  S.C.S. CURVE NUMBER (AMC II) =   0
  AREA-AVERAGE RUNOFF COEFFICIENT = 0.4500
  SUBAREA AREA(ACRES) =    3.50   SUBAREA RUNOFF(CFS) =    4.87
  TOTAL AREA(ACRES) =       10.5   TOTAL RUNOFF(CFS) =      14.60
  TC(MIN.) =   13.27

****************************************************************************
  FLOW PROCESS FROM NODE    120.00 TO NODE    199.00 IS CODE =  51
----------------------------------------------------------------------------
  >>>>>COMPUTE TRAPEZOIDAL CHANNEL FLOW<<<<<
  >>>>>TRAVELTIME THRU SUBAREA (EXISTING ELEMENT)<<<<<
============================================================================
  ELEVATION DATA: UPSTREAM(FEET) =    100.00  DOWNSTREAM(FEET) =     80.00
  CHANNEL LENGTH THRU SUBAREA(FEET) =   500.00   CHANNEL SLOPE =  0.0400
  CHANNEL BASE(FEET) =   10.00   "Z" FACTOR =   4.000
  MANNING'S FACTOR = 0.035   MAXIMUM DEPTH(FEET) =  10.00
   100 YEAR RAINFALL INTENSITY(INCH/HOUR) =  2.878
```

```
  *USER SPECIFIED(SUBAREA):
  RESIDENTIAL (1. DU/AC OR LESS) RUNOFF COEFFICIENT = .4500
  S.C.S. CURVE NUMBER (AMC II) =   0
  TRAVEL TIME COMPUTED USING ESTIMATED FLOW(CFS) =      18.94
  TRAVEL TIME THRU SUBAREA BASED ON VELOCITY(FEET/SEC.) =   4.15
  AVERAGE FLOW DEPTH(FEET) =   0.39   TRAVEL TIME(MIN.) =   2.01
  Tc(MIN.) =   15.27
  SUBAREA AREA(ACRES) =     6.70       SUBAREA RUNOFF(CFS) =    8.68
  AREA-AVERAGE RUNOFF COEFFICIENT =  0.450
  TOTAL AREA(ACRES) =        17.2          PEAK FLOW RATE(CFS) =      22.28

  END OF SUBAREA CHANNEL FLOW HYDRAULICS:
  DEPTH(FEET) =  0.43   FLOW VELOCITY(FEET/SEC.) =   4.40
  LONGEST FLOWPATH FROM NODE    100.00 TO NODE    199.00 =    1400.00 FEET.

****************************************************************************
  FLOW PROCESS FROM NODE    199.00 TO NODE   1405.00 IS CODE =  51
----------------------------------------------------------------------------
  >>>>>COMPUTE TRAPEZOIDAL CHANNEL FLOW<<<<<
  >>>>>TRAVELTIME THRU SUBAREA (EXISTING ELEMENT)<<<<<
============================================================================
  ELEVATION DATA: UPSTREAM(FEET) =    100.00  DOWNSTREAM(FEET) =     72.00
  CHANNEL LENGTH THRU SUBAREA(FEET) =   700.00   CHANNEL SLOPE =  0.0400
  CHANNEL BASE(FEET) =   10.00   "Z" FACTOR =   4.000
  MANNING'S FACTOR = 0.035   MAXIMUM DEPTH(FEET) =  10.00
   100 YEAR RAINFALL INTENSITY(INCH/HOUR) =  2.691
  *USER SPECIFIED(SUBAREA):
  RESIDENTIAL (1. DU/AC OR LESS) RUNOFF COEFFICIENT = .4500
  S.C.S. CURVE NUMBER (AMC II) =   0
  TRAVEL TIME COMPUTED USING ESTIMATED FLOW(CFS) =      32.58
  TRAVEL TIME THRU SUBAREA BASED ON VELOCITY(FEET/SEC.) =   4.99
  AVERAGE FLOW DEPTH(FEET) =   0.54   TRAVEL TIME(MIN.) =   2.34
  Tc(MIN.) =   17.61
  SUBAREA AREA(ACRES) =    17.00       SUBAREA RUNOFF(CFS) =   20.59
  AREA-AVERAGE RUNOFF COEFFICIENT =  0.450
  TOTAL AREA(ACRES) =        34.2          PEAK FLOW RATE(CFS) =      41.42

  END OF SUBAREA CHANNEL FLOW HYDRAULICS:
  DEPTH(FEET) =  0.62   FLOW VELOCITY(FEET/SEC.) =   5.40
  LONGEST FLOWPATH FROM NODE    100.00 TO NODE   1405.00 =    2100.00 FEET.

****************************************************************************
  FLOW PROCESS FROM NODE   1405.00 TO NODE   1405.00 IS CODE =   1
----------------------------------------------------------------------------
  >>>>>DESIGNATE INDEPENDENT STREAM FOR CONFLUENCE<<<<<
  >>>>>AND COMPUTE VARIOUS CONFLUENCED STREAM VALUES<<<<<
============================================================================
  TOTAL NUMBER OF STREAMS =  2
  CONFLUENCE VALUES USED FOR INDEPENDENT STREAM  2 ARE:
  TIME OF CONCENTRATION(MIN.) =   17.61
  RAINFALL INTENSITY(INCH/HR) =   2.69
  TOTAL STREAM AREA(ACRES) =    34.20
  PEAK FLOW RATE(CFS) AT CONFLUENCE =     41.42

  ** CONFLUENCE DATA **
  STREAM     RUNOFF       Tc      INTENSITY      AREA
  NUMBER      (CFS)     (MIN.)   (INCH/HOUR)    (ACRE)
      1       95.06    15.05        2.896         60.30
```

This is Peak flow Rate at POC 1

```
      2       41.42    17.61        2.691         34.20

  RAINFALL INTENSITY AND TIME OF CONCENTRATION RATIO
  CONFLUENCE FORMULA USED FOR  2 STREAMS.

  ** PEAK FLOW RATE TABLE **
  STREAM     RUNOFF      Tc      INTENSITY
  NUMBER      (CFS)    (MIN.)   (INCH/HOUR)
      1      130.46    15.05       2.896
      2      129.77    17.61       2.691

  COMPUTED CONFLUENCE ESTIMATES ARE AS FOLLOWS:
  PEAK FLOW RATE(CFS) =     130.46   Tc(MIN.) =   15.05
  TOTAL AREA(ACRES) =       94.5
  LONGEST FLOWPATH FROM NODE   1400.00 TO NODE   1405.00 =    3215.00 FEET.

****************************************************************************
  FLOW PROCESS FROM NODE   1405.00 TO NODE   1410.00 IS CODE =  51
----------------------------------------------------------------------------
  >>>>>COMPUTE TRAPEZOIDAL CHANNEL FLOW<<<<<
  >>>>>TRAVELTIME THRU SUBAREA (EXISTING ELEMENT)<<<<<
============================================================================
  ELEVATION DATA: UPSTREAM(FEET) =    100.00  DOWNSTREAM(FEET) =     84.00
  CHANNEL LENGTH THRU SUBAREA(FEET) =   400.00   CHANNEL SLOPE =  0.0400
  CHANNEL BASE(FEET) =   10.00   "Z" FACTOR =   4.000
  MANNING'S FACTOR = 0.035   MAXIMUM DEPTH(FEET) =  10.00
   100 YEAR RAINFALL INTENSITY(INCH/HOUR) =  2.827
  *USER SPECIFIED(SUBAREA):
  RESIDENTIAL (1. DU/AC OR LESS) RUNOFF COEFFICIENT = .4500
  S.C.S. CURVE NUMBER (AMC II) =   0
  TRAVEL TIME COMPUTED USING ESTIMATED FLOW(CFS) =     133.71
  TRAVEL TIME THRU SUBAREA BASED ON VELOCITY(FEET/SEC.) =   7.77
  AVERAGE FLOW DEPTH(FEET) =   1.17   TRAVEL TIME(MIN.) =   0.86
  Tc(MIN.) =   15.91
  SUBAREA AREA(ACRES) =     5.10       SUBAREA RUNOFF(CFS) =    6.49
  AREA-AVERAGE RUNOFF COEFFICIENT =  0.507
  TOTAL AREA(ACRES) =       99.6         PEAK FLOW RATE(CFS) =     142.81

  END OF SUBAREA CHANNEL FLOW HYDRAULICS:
  DEPTH(FEET) =  1.22   FLOW VELOCITY(FEET/SEC.) =   7.90
  LONGEST FLOWPATH FROM NODE   1400.00 TO NODE   1410.00 =    3615.00 FEET.

****************************************************************************
  FLOW PROCESS FROM NODE   1410.00 TO NODE   1410.00 IS CODE =  10
----------------------------------------------------------------------------
  >>>>>MAIN-STREAM MEMORY COPIED ONTO MEMORY BANK # 1 <<<<<
============================================================================

****************************************************************************
  FLOW PROCESS FROM NODE    200.00 TO NODE    201.00 IS CODE =  21
----------------------------------------------------------------------------
  >>>>>RATIONAL METHOD INITIAL SUBAREA ANALYSIS<<<<<
============================================================================
  *USER SPECIFIED(SUBAREA):
  RESIDENTIAL (1. DU/AC OR LESS) RUNOFF COEFFICIENT = .4500
  S.C.S. CURVE NUMBER (AMC II) =   0
  INITIAL SUBAREA FLOW-LENGTH(FEET) =   100.00
  UPSTREAM ELEVATION(FEET) =    100.00
```

```
  DOWNSTREAM ELEVATION(FEET) =     98.00
  ELEVATION DIFFERENCE(FEET) =      2.00
  URBAN SUBAREA OVERLAND TIME OF FLOW(MIN.) =    8.562
  WARNING: INITIAL SUBAREA FLOW PATH LENGTH IS GREATER THAN
           THE MAXIMUM OVERLAND FLOW LENGTH =    85.00
           (Reference: Table 3-1B of Hydrology Manual)
           THE MAXIMUM OVERLAND FLOW LENGTH IS USED IN Tc CALCULATION!
   100 YEAR RAINFALL INTENSITY(INCH/HOUR) =  3.723
  SUBAREA RUNOFF(CFS) =      0.34
  TOTAL AREA(ACRES) =      0.20   TOTAL RUNOFF(CFS) =      0.34

****************************************************************************
  FLOW PROCESS FROM NODE    201.00 TO NODE    210.00 IS CODE =  51
----------------------------------------------------------------------------
  >>>>>COMPUTE TRAPEZOIDAL CHANNEL FLOW<<<<<
  >>>>>TRAVELTIME THRU SUBAREA (EXISTING ELEMENT)<<<<<
============================================================================
  ELEVATION DATA: UPSTREAM(FEET) =    100.00  DOWNSTREAM(FEET) =     52.00
  CHANNEL LENGTH THRU SUBAREA(FEET) =   800.00   CHANNEL SLOPE =  0.0600
  CHANNEL BASE(FEET) =    5.00   "Z" FACTOR =  10.000
  MANNING'S FACTOR = 0.035   MAXIMUM DEPTH(FEET) =  10.00
   100 YEAR RAINFALL INTENSITY(INCH/HOUR) =  3.187
  *USER SPECIFIED(SUBAREA):
  RESIDENTIAL (1. DU/AC OR LESS) RUNOFF COEFFICIENT = .4500
  S.C.S. CURVE NUMBER (AMC II) =   0
  TRAVEL TIME COMPUTED USING ESTIMATED FLOW(CFS) =       6.96
  TRAVEL TIME THRU SUBAREA BASED ON VELOCITY(FEET/SEC.) =   3.48
  AVERAGE FLOW DEPTH(FEET) =   0.26   TRAVEL TIME(MIN.) =   3.83
  Tc(MIN.) =   12.39
  SUBAREA AREA(ACRES) =     9.20       SUBAREA RUNOFF(CFS) =   13.19
  AREA-AVERAGE RUNOFF COEFFICIENT =  0.450
  TOTAL AREA(ACRES) =        9.4         PEAK FLOW RATE(CFS) =      13.48

  END OF SUBAREA CHANNEL FLOW HYDRAULICS:
  DEPTH(FEET) =  0.37   FLOW VELOCITY(FEET/SEC.) =   4.20
  LONGEST FLOWPATH FROM NODE    200.00 TO NODE    210.00 =     900.00 FEET.

****************************************************************************
  FLOW PROCESS FROM NODE    210.00 TO NODE    220.00 IS CODE =  51
----------------------------------------------------------------------------
  >>>>>COMPUTE TRAPEZOIDAL CHANNEL FLOW<<<<<
  >>>>>TRAVELTIME THRU SUBAREA (EXISTING ELEMENT)<<<<<
============================================================================
  ELEVATION DATA: UPSTREAM(FEET) =    100.00  DOWNSTREAM(FEET) =     88.00
  CHANNEL LENGTH THRU SUBAREA(FEET) =   300.00   CHANNEL SLOPE =  0.0400
  CHANNEL BASE(FEET) =   10.00   "Z" FACTOR =   4.000
  MANNING'S FACTOR = 0.035   MAXIMUM DEPTH(FEET) =  10.00
   100 YEAR RAINFALL INTENSITY(INCH/HOUR) =  3.039
  *USER SPECIFIED(SUBAREA):
  RESIDENTIAL (1. DU/AC OR LESS) RUNOFF COEFFICIENT = .4500
  S.C.S. CURVE NUMBER (AMC II) =   0
  TRAVEL TIME COMPUTED USING ESTIMATED FLOW(CFS) =      13.96
  TRAVEL TIME THRU SUBAREA BASED ON VELOCITY(FEET/SEC.) =   3.73
  AVERAGE FLOW DEPTH(FEET) =   0.33   TRAVEL TIME(MIN.) =   1.34
  Tc(MIN.) =   13.73
  SUBAREA AREA(ACRES) =     0.70       SUBAREA RUNOFF(CFS) =    0.96
  AREA-AVERAGE RUNOFF COEFFICIENT =  0.450
  TOTAL AREA(ACRES) =       10.1         PEAK FLOW RATE(CFS) =      13.81
```

```
  END OF SUBAREA CHANNEL FLOW HYDRAULICS:
  DEPTH(FEET) =  0.33   FLOW VELOCITY(FEET/SEC.) =   3.76
  LONGEST FLOWPATH FROM NODE    200.00 TO NODE    220.00 =    1200.00 FEET.

****************************************************************************
  FLOW PROCESS FROM NODE    220.00 TO NODE    220.00 IS CODE =  81
----------------------------------------------------------------------------
  >>>>>ADDITION OF SUBAREA TO MAINLINE PEAK FLOW<<<<<
============================================================================
   100 YEAR RAINFALL INTENSITY(INCH/HOUR) =  3.039
  *USER SPECIFIED(SUBAREA):
  RESIDENTIAL (1. DU/AC OR LESS) RUNOFF COEFFICIENT = .4500
  S.C.S. CURVE NUMBER (AMC II) =   0
  AREA-AVERAGE RUNOFF COEFFICIENT = 0.4500
  SUBAREA AREA(ACRES) =   26.30   SUBAREA RUNOFF(CFS) =   35.97
  TOTAL AREA(ACRES) =       36.4   TOTAL RUNOFF(CFS) =      49.78
  TC(MIN.) =   13.73

****************************************************************************
  FLOW PROCESS FROM NODE    220.00 TO NODE    230.00 IS CODE =  51
----------------------------------------------------------------------------
  >>>>>COMPUTE TRAPEZOIDAL CHANNEL FLOW<<<<<
  >>>>>TRAVELTIME THRU SUBAREA (EXISTING ELEMENT)<<<<<
============================================================================
  ELEVATION DATA: UPSTREAM(FEET) =    100.00  DOWNSTREAM(FEET) =     86.00
  CHANNEL LENGTH THRU SUBAREA(FEET) =   350.00   CHANNEL SLOPE =  0.0400
  CHANNEL BASE(FEET) =   10.00   "Z" FACTOR =   4.000
  MANNING'S FACTOR = 0.035   MAXIMUM DEPTH(FEET) =  10.00
   100 YEAR RAINFALL INTENSITY(INCH/HOUR) =  2.930
  *USER SPECIFIED(SUBAREA):
  RESIDENTIAL (1. DU/AC OR LESS) RUNOFF COEFFICIENT = .4500
  S.C.S. CURVE NUMBER (AMC II) =   0
  TRAVEL TIME COMPUTED USING ESTIMATED FLOW(CFS) =      53.28
  TRAVEL TIME THRU SUBAREA BASED ON VELOCITY(FEET/SEC.) =   5.88
  AVERAGE FLOW DEPTH(FEET) =   0.71   TRAVEL TIME(MIN.) =   0.99
  Tc(MIN.) =   14.73
  SUBAREA AREA(ACRES) =     5.30       SUBAREA RUNOFF(CFS) =    6.99
  AREA-AVERAGE RUNOFF COEFFICIENT =  0.450
  TOTAL AREA(ACRES) =       41.7         PEAK FLOW RATE(CFS) =      54.98

  END OF SUBAREA CHANNEL FLOW HYDRAULICS:
  DEPTH(FEET) =  0.72   FLOW VELOCITY(FEET/SEC.) =   5.93
  LONGEST FLOWPATH FROM NODE    200.00 TO NODE    230.00 =    1550.00 FEET.

****************************************************************************
  FLOW PROCESS FROM NODE    230.00 TO NODE    230.00 IS CODE =  81
----------------------------------------------------------------------------
  >>>>>ADDITION OF SUBAREA TO MAINLINE PEAK FLOW<<<<<
============================================================================
   100 YEAR RAINFALL INTENSITY(INCH/HOUR) =  2.930
  *USER SPECIFIED(SUBAREA):
  RESIDENTIAL (1. DU/AC OR LESS) RUNOFF COEFFICIENT = .4500
  S.C.S. CURVE NUMBER (AMC II) =   0
  AREA-AVERAGE RUNOFF COEFFICIENT = 0.4500
  SUBAREA AREA(ACRES) =   14.70   SUBAREA RUNOFF(CFS) =   19.38
  TOTAL AREA(ACRES) =       56.4   TOTAL RUNOFF(CFS) =      74.36
  TC(MIN.) =   14.73
```

```
****************************************************************************
  FLOW PROCESS FROM NODE    230.00 TO NODE    299.00 IS CODE =  51
----------------------------------------------------------------------------
  >>>>>COMPUTE TRAPEZOIDAL CHANNEL FLOW<<<<<
  >>>>>TRAVELTIME THRU SUBAREA (EXISTING ELEMENT)<<<<<
============================================================================
  ELEVATION DATA: UPSTREAM(FEET) =    100.00  DOWNSTREAM(FEET) =     82.00
  CHANNEL LENGTH THRU SUBAREA(FEET) =   450.00   CHANNEL SLOPE =  0.0400
  CHANNEL BASE(FEET) =   10.00   "Z" FACTOR =   4.000
  MANNING'S FACTOR = 0.035   MAXIMUM DEPTH(FEET) =  10.00
   100 YEAR RAINFALL INTENSITY(INCH/HOUR) =  2.830
  *USER SPECIFIED(SUBAREA):
  RESIDENTIAL (1. DU/AC OR LESS) RUNOFF COEFFICIENT = .4500
  S.C.S. CURVE NUMBER (AMC II) =   0
  TRAVEL TIME COMPUTED USING ESTIMATED FLOW(CFS) =      77.29
  TRAVEL TIME THRU SUBAREA BASED ON VELOCITY(FEET/SEC.) =   6.57
  AVERAGE FLOW DEPTH(FEET) =   0.87   TRAVEL TIME(MIN.) =   1.14
  Tc(MIN.) =   15.87
  SUBAREA AREA(ACRES) =     4.60       SUBAREA RUNOFF(CFS) =    5.86
  AREA-AVERAGE RUNOFF COEFFICIENT =  0.450
  TOTAL AREA(ACRES) =       61.0         PEAK FLOW RATE(CFS) =      77.70
```

This is Peak flow Rate at POC 2

```
  END OF SUBAREA CHANNEL FLOW HYDRAULICS:
  DEPTH(FEET) =  0.87   FLOW VELOCITY(FEET/SEC.) =   6.60
  LONGEST FLOWPATH FROM NODE    200.00 TO NODE    299.00 =    2000.00 FEET.

****************************************************************************
  FLOW PROCESS FROM NODE    299.00 TO NODE   1408.00 IS CODE =  51
----------------------------------------------------------------------------
  >>>>>COMPUTE TRAPEZOIDAL CHANNEL FLOW<<<<<
  >>>>>TRAVELTIME THRU SUBAREA (EXISTING ELEMENT)<<<<<
============================================================================
  ELEVATION DATA: UPSTREAM(FEET) =    100.00  DOWNSTREAM(FEET) =     82.00
  CHANNEL LENGTH THRU SUBAREA(FEET) =   450.00   CHANNEL SLOPE =  0.0400
  CHANNEL BASE(FEET) =   10.00   "Z" FACTOR =   4.000
  MANNING'S FACTOR = 0.035   MAXIMUM DEPTH(FEET) =  10.00
   100 YEAR RAINFALL INTENSITY(INCH/HOUR) =  2.741
  *USER SPECIFIED(SUBAREA):
  RESIDENTIAL (1. DU/AC OR LESS) RUNOFF COEFFICIENT = .4500
  S.C.S. CURVE NUMBER (AMC II) =   0
  TRAVEL TIME COMPUTED USING ESTIMATED FLOW(CFS) =      81.52
  TRAVEL TIME THRU SUBAREA BASED ON VELOCITY(FEET/SEC.) =   6.70
  AVERAGE FLOW DEPTH(FEET) =   0.90   TRAVEL TIME(MIN.) =   1.12
  Tc(MIN.) =   16.99
  SUBAREA AREA(ACRES) =     6.20       SUBAREA RUNOFF(CFS) =    7.65
  AREA-AVERAGE RUNOFF COEFFICIENT =  0.450
  TOTAL AREA(ACRES) =       67.2         PEAK FLOW RATE(CFS) =      82.89

  END OF SUBAREA CHANNEL FLOW HYDRAULICS:
  DEPTH(FEET) =  0.91   FLOW VELOCITY(FEET/SEC.) =   6.72
  LONGEST FLOWPATH FROM NODE    200.00 TO NODE   1408.00 =    2450.00 FEET.

****************************************************************************
  FLOW PROCESS FROM NODE   1408.00 TO NODE   1408.00 IS CODE =   1
----------------------------------------------------------------------------
  >>>>>DESIGNATE INDEPENDENT STREAM FOR CONFLUENCE<<<<<
============================================================================
```

```
  TOTAL NUMBER OF STREAMS =  2
  CONFLUENCE VALUES USED FOR INDEPENDENT STREAM  1 ARE:
  TIME OF CONCENTRATION(MIN.) =   16.99
  RAINFALL INTENSITY(INCH/HR) =   2.74
  TOTAL STREAM AREA(ACRES) =    67.20
  PEAK FLOW RATE(CFS) AT CONFLUENCE =     82.89

****************************************************************************
  FLOW PROCESS FROM NODE    300.00 TO NODE    301.00 IS CODE =  21
----------------------------------------------------------------------------
  >>>>>RATIONAL METHOD INITIAL SUBAREA ANALYSIS<<<<<
============================================================================
  *USER SPECIFIED(SUBAREA):
  RESIDENTIAL (1. DU/AC OR LESS) RUNOFF COEFFICIENT = .4500
  S.C.S. CURVE NUMBER (AMC II) =   0
  INITIAL SUBAREA FLOW-LENGTH(FEET) =   100.00
  UPSTREAM ELEVATION(FEET) =    100.00
  DOWNSTREAM ELEVATION(FEET) =     98.00
  ELEVATION DIFFERENCE(FEET) =      2.00
  URBAN SUBAREA OVERLAND TIME OF FLOW(MIN.) =    8.562
  WARNING: INITIAL SUBAREA FLOW PATH LENGTH IS GREATER THAN
           THE MAXIMUM OVERLAND FLOW LENGTH =    85.00
           (Reference: Table 3-1B of Hydrology Manual)
           THE MAXIMUM OVERLAND FLOW LENGTH IS USED IN Tc CALCULATION!
   100 YEAR RAINFALL INTENSITY(INCH/HOUR) =  3.723
  SUBAREA RUNOFF(CFS) =      0.34
  TOTAL AREA(ACRES) =      0.20   TOTAL RUNOFF(CFS) =      0.34

****************************************************************************
  FLOW PROCESS FROM NODE    301.00 TO NODE    310.00 IS CODE =  51
----------------------------------------------------------------------------
  >>>>>COMPUTE TRAPEZOIDAL CHANNEL FLOW<<<<<
  >>>>>TRAVELTIME THRU SUBAREA (EXISTING ELEMENT)<<<<<
============================================================================
  ELEVATION DATA: UPSTREAM(FEET) =    100.00  DOWNSTREAM(FEET) =     76.00
  CHANNEL LENGTH THRU SUBAREA(FEET) =   600.00   CHANNEL SLOPE =  0.0400
  CHANNEL BASE(FEET) =    5.00   "Z" FACTOR =  10.000
  MANNING'S FACTOR = 0.035   MAXIMUM DEPTH(FEET) =  10.00
   100 YEAR RAINFALL INTENSITY(INCH/HOUR) =  3.230
  *USER SPECIFIED(SUBAREA):
  RESIDENTIAL (1. DU/AC OR LESS) RUNOFF COEFFICIENT = .4500
  S.C.S. CURVE NUMBER (AMC II) =   0
  TRAVEL TIME COMPUTED USING ESTIMATED FLOW(CFS) =       6.10
  TRAVEL TIME THRU SUBAREA BASED ON VELOCITY(FEET/SEC.) =   2.91
  AVERAGE FLOW DEPTH(FEET) =   0.27   TRAVEL TIME(MIN.) =   3.44
  Tc(MIN.) =   12.00
  SUBAREA AREA(ACRES) =     7.90       SUBAREA RUNOFF(CFS) =   11.48
  AREA-AVERAGE RUNOFF COEFFICIENT =  0.450
  TOTAL AREA(ACRES) =        8.1         PEAK FLOW RATE(CFS) =      11.77

  END OF SUBAREA CHANNEL FLOW HYDRAULICS:
  DEPTH(FEET) =  0.38   FLOW VELOCITY(FEET/SEC.) =   3.54
  LONGEST FLOWPATH FROM NODE    300.00 TO NODE    310.00 =     700.00 FEET.

****************************************************************************
  FLOW PROCESS FROM NODE    310.00 TO NODE    320.00 IS CODE =  51
----------------------------------------------------------------------------
  >>>>>COMPUTE TRAPEZOIDAL CHANNEL FLOW<<<<<
```

```
  >>>>>TRAVELTIME THRU SUBAREA (EXISTING ELEMENT)<<<<<
============================================================================
  ELEVATION DATA: UPSTREAM(FEET) =    100.00  DOWNSTREAM(FEET) =     86.00
  CHANNEL LENGTH THRU SUBAREA(FEET) =   350.00   CHANNEL SLOPE =  0.0400
  CHANNEL BASE(FEET) =   10.00   "Z" FACTOR =   4.000
  MANNING'S FACTOR = 0.035   MAXIMUM DEPTH(FEET) =  10.00
   100 YEAR RAINFALL INTENSITY(INCH/HOUR) =  3.052
  *USER SPECIFIED(SUBAREA):
  RESIDENTIAL (1. DU/AC OR LESS) RUNOFF COEFFICIENT = .4500
  S.C.S. CURVE NUMBER (AMC II) =   0
  TRAVEL TIME COMPUTED USING ESTIMATED FLOW(CFS) =      12.60
  TRAVEL TIME THRU SUBAREA BASED ON VELOCITY(FEET/SEC.) =   3.62
  AVERAGE FLOW DEPTH(FEET) =   0.31   TRAVEL TIME(MIN.) =   1.61
  Tc(MIN.) =   13.62
  SUBAREA AREA(ACRES) =     1.20       SUBAREA RUNOFF(CFS) =    1.65
  AREA-AVERAGE RUNOFF COEFFICIENT =  0.450
  TOTAL AREA(ACRES) =        9.3         PEAK FLOW RATE(CFS) =      12.77

  END OF SUBAREA CHANNEL FLOW HYDRAULICS:
  DEPTH(FEET) =  0.31   FLOW VELOCITY(FEET/SEC.) =   3.67
  LONGEST FLOWPATH FROM NODE    300.00 TO NODE    320.00 =    1050.00 FEET.

****************************************************************************
  FLOW PROCESS FROM NODE    320.00 TO NODE    320.00 IS CODE =  81
----------------------------------------------------------------------------
  >>>>>ADDITION OF SUBAREA TO MAINLINE PEAK FLOW<<<<<
============================================================================
   100 YEAR RAINFALL INTENSITY(INCH/HOUR) =  3.052
  *USER SPECIFIED(SUBAREA):
  RESIDENTIAL (1. DU/AC OR LESS) RUNOFF COEFFICIENT = .4500
  S.C.S. CURVE NUMBER (AMC II) =   0
  AREA-AVERAGE RUNOFF COEFFICIENT = 0.4500
  SUBAREA AREA(ACRES) =    9.90   SUBAREA RUNOFF(CFS) =   13.60
  TOTAL AREA(ACRES) =       19.2   TOTAL RUNOFF(CFS) =      26.37
  TC(MIN.) =   13.62

****************************************************************************
  FLOW PROCESS FROM NODE    320.00 TO NODE    399.00 IS CODE =  51
----------------------------------------------------------------------------
  >>>>>COMPUTE TRAPEZOIDAL CHANNEL FLOW<<<<<
  >>>>>TRAVELTIME THRU SUBAREA (EXISTING ELEMENT)<<<<<
============================================================================
  ELEVATION DATA: UPSTREAM(FEET) =    100.00  DOWNSTREAM(FEET) =     84.00
  CHANNEL LENGTH THRU SUBAREA(FEET) =   400.00   CHANNEL SLOPE =  0.0400
  CHANNEL BASE(FEET) =   10.00   "Z" FACTOR =   4.000
  MANNING'S FACTOR = 0.035   MAXIMUM DEPTH(FEET) =  10.00
   100 YEAR RAINFALL INTENSITY(INCH/HOUR) =  2.903
  *USER SPECIFIED(SUBAREA):
  RESIDENTIAL (1. DU/AC OR LESS) RUNOFF COEFFICIENT = .4500
  S.C.S. CURVE NUMBER (AMC II) =   0
  TRAVEL TIME COMPUTED USING ESTIMATED FLOW(CFS) =      30.94
  TRAVEL TIME THRU SUBAREA BASED ON VELOCITY(FEET/SEC.) =   4.91
  AVERAGE FLOW DEPTH(FEET) =   0.52   TRAVEL TIME(MIN.) =   1.36
  Tc(MIN.) =   14.97
  SUBAREA AREA(ACRES) =     7.00       SUBAREA RUNOFF(CFS) =    9.14
  AREA-AVERAGE RUNOFF COEFFICIENT =  0.450
  TOTAL AREA(ACRES) =       26.2         PEAK FLOW RATE(CFS) =      34.22
```

```
  END OF SUBAREA CHANNEL FLOW HYDRAULICS:
  DEPTH(FEET) =  0.55   FLOW VELOCITY(FEET/SEC.) =   5.08
  LONGEST FLOWPATH FROM NODE    300.00 TO NODE    399.00 =    1450.00 FEET.

****************************************************************************
  FLOW PROCESS FROM NODE    399.00 TO NODE    399.00 IS CODE =  81
----------------------------------------------------------------------------
  >>>>>ADDITION OF SUBAREA TO MAINLINE PEAK FLOW<<<<<
============================================================================
   100 YEAR RAINFALL INTENSITY(INCH/HOUR) =  2.903
  *USER SPECIFIED(SUBAREA):
  RESIDENTIAL (1. DU/AC OR LESS) RUNOFF COEFFICIENT = .4500
  S.C.S. CURVE NUMBER (AMC II) =   0
  AREA-AVERAGE RUNOFF COEFFICIENT = 0.4500
  SUBAREA AREA(ACRES) =    1.40   SUBAREA RUNOFF(CFS) =    1.83
  TOTAL AREA(ACRES) =       27.6   TOTAL RUNOFF(CFS) =      36.05
  TC(MIN.) =   14.97

****************************************************************************
  FLOW PROCESS FROM NODE    399.00 TO NODE   1408.00 IS CODE =  51
----------------------------------------------------------------------------
  >>>>>COMPUTE TRAPEZOIDAL CHANNEL FLOW<<<<<
  >>>>>TRAVELTIME THRU SUBAREA (EXISTING ELEMENT)<<<<<
============================================================================
  ELEVATION DATA: UPSTREAM(FEET) =    100.00  DOWNSTREAM(FEET) =     90.00
  CHANNEL LENGTH THRU SUBAREA(FEET) =   250.00   CHANNEL SLOPE =  0.0400
  CHANNEL BASE(FEET) =   10.00   "Z" FACTOR =   4.000
  MANNING'S FACTOR = 0.035   MAXIMUM DEPTH(FEET) =  10.00
   100 YEAR RAINFALL INTENSITY(INCH/HOUR) =  2.838
  *USER SPECIFIED(SUBAREA):
  RESIDENTIAL (1. DU/AC OR LESS) RUNOFF COEFFICIENT = .4500
  S.C.S. CURVE NUMBER (AMC II) =   0
  TRAVEL TIME COMPUTED USING ESTIMATED FLOW(CFS) =      37.39
  TRAVEL TIME THRU SUBAREA BASED ON VELOCITY(FEET/SEC.) =   5.20
  AVERAGE FLOW DEPTH(FEET) =   0.58   TRAVEL TIME(MIN.) =   0.80
  Tc(MIN.) =   15.78
  SUBAREA AREA(ACRES) =     2.10       SUBAREA RUNOFF(CFS) =    2.68
  AREA-AVERAGE RUNOFF COEFFICIENT =  0.450
  TOTAL AREA(ACRES) =       29.7         PEAK FLOW RATE(CFS) =      37.93

  END OF SUBAREA CHANNEL FLOW HYDRAULICS:
  DEPTH(FEET) =  0.58   FLOW VELOCITY(FEET/SEC.) =   5.26
  LONGEST FLOWPATH FROM NODE    300.00 TO NODE   1408.00 =    1700.00 FEET.

****************************************************************************
  FLOW PROCESS FROM NODE   1408.00 TO NODE   1408.00 IS CODE =   1
----------------------------------------------------------------------------
  >>>>>DESIGNATE INDEPENDENT STREAM FOR CONFLUENCE<<<<<
  >>>>>AND COMPUTE VARIOUS CONFLUENCED STREAM VALUES<<<<<
============================================================================
  TOTAL NUMBER OF STREAMS =  2
  CONFLUENCE VALUES USED FOR INDEPENDENT STREAM  2 ARE:
  TIME OF CONCENTRATION(MIN.) =   15.78
  RAINFALL INTENSITY(INCH/HR) =   2.84
  TOTAL STREAM AREA(ACRES) =    29.70
  PEAK FLOW RATE(CFS) AT CONFLUENCE =     37.93

  ** CONFLUENCE DATA **
```

This is Peak
flow Rate from
Basin 300

```
  STREAM     RUNOFF       Tc      INTENSITY      AREA
  NUMBER      (CFS)     (MIN.)   (INCH/HOUR)    (ACRE)
      1       82.89    16.99        2.741         67.20
      2       37.93    15.78        2.838         29.70

  RAINFALL INTENSITY AND TIME OF CONCENTRATION RATIO
  CONFLUENCE FORMULA USED FOR  2 STREAMS.

  ** PEAK FLOW RATE TABLE **
  STREAM     RUNOFF      Tc      INTENSITY
  NUMBER      (CFS)    (MIN.)   (INCH/HOUR)
      1      114.90    15.78       2.838
      2      119.52    16.99       2.741

  COMPUTED CONFLUENCE ESTIMATES ARE AS FOLLOWS:
  PEAK FLOW RATE(CFS) =     119.52   Tc(MIN.) =   16.99
  TOTAL AREA(ACRES) =       96.9
  LONGEST FLOWPATH FROM NODE    200.00 TO NODE   1408.00 =    2450.00 FEET.

****************************************************************************
  FLOW PROCESS FROM NODE   1408.00 TO NODE   1410.00 IS CODE =  51
----------------------------------------------------------------------------
  >>>>>COMPUTE TRAPEZOIDAL CHANNEL FLOW<<<<<
  >>>>>TRAVELTIME THRU SUBAREA (EXISTING ELEMENT)<<<<<
============================================================================
  ELEVATION DATA: UPSTREAM(FEET) =    100.00  DOWNSTREAM(FEET) =     78.00
  CHANNEL LENGTH THRU SUBAREA(FEET) =   550.00   CHANNEL SLOPE =  0.0400
  CHANNEL BASE(FEET) =   10.00   "Z" FACTOR =   4.000
  MANNING'S FACTOR = 0.035   MAXIMUM DEPTH(FEET) =  10.00
   100 YEAR RAINFALL INTENSITY(INCH/HOUR) =  2.644
  *USER SPECIFIED(SUBAREA):
  RESIDENTIAL (1. DU/AC OR LESS) RUNOFF COEFFICIENT = .4500
  S.C.S. CURVE NUMBER (AMC II) =   0
  TRAVEL TIME COMPUTED USING ESTIMATED FLOW(CFS) =     123.63
  TRAVEL TIME THRU SUBAREA BASED ON VELOCITY(FEET/SEC.) =   7.58
  AVERAGE FLOW DEPTH(FEET) =   1.12   TRAVEL TIME(MIN.) =   1.21
  Tc(MIN.) =   18.20
  SUBAREA AREA(ACRES) =     6.90       SUBAREA RUNOFF(CFS) =    8.21
  AREA-AVERAGE RUNOFF COEFFICIENT =  0.450
  TOTAL AREA(ACRES) =      103.8         PEAK FLOW RATE(CFS) =     123.51

  END OF SUBAREA CHANNEL FLOW HYDRAULICS:
  DEPTH(FEET) =  1.12   FLOW VELOCITY(FEET/SEC.) =   7.58
  LONGEST FLOWPATH FROM NODE    200.00 TO NODE   1410.00 =    3000.00 FEET.

****************************************************************************
  FLOW PROCESS FROM NODE   1410.00 TO NODE   1410.00 IS CODE =  11
----------------------------------------------------------------------------
  >>>>>CONFLUENCE MEMORY BANK # 1 WITH THE MAIN-STREAM MEMORY<<<<<
============================================================================

  ** MAIN STREAM CONFLUENCE DATA **
  STREAM     RUNOFF      Tc      INTENSITY     AREA
  NUMBER      (CFS)    (MIN.)   (INCH/HOUR)   (ACRE)
      1      123.51    18.20       2.644      103.80
  LONGEST FLOWPATH FROM NODE    200.00 TO NODE   1410.00 =    3000.00 FEET.

  ** MEMORY BANK #  1 CONFLUENCE DATA **
```

```
  STREAM     RUNOFF      Tc      INTENSITY     AREA
  NUMBER      (CFS)    (MIN.)   (INCH/HOUR)   (ACRE)
      1      142.81    15.91       2.827       99.60
  LONGEST FLOWPATH FROM NODE   1400.00 TO NODE   1410.00 =    3615.00 FEET.

  ** PEAK FLOW RATE TABLE **
  STREAM    RUNOFF       Tc      INTENSITY
  NUMBER     (CFS)     (MIN.)   (INCH/HOUR)
      1     250.78      15.91        2.827
      2     257.07      18.20        2.644

  COMPUTED CONFLUENCE ESTIMATES ARE AS FOLLOWS:
  PEAK FLOW RATE(CFS) =     257.07   Tc(MIN.) =   18.20
  TOTAL AREA(ACRES) =      203.4

****************************************************************************
  FLOW PROCESS FROM NODE   1410.00 TO NODE   1420.00 IS CODE =  51
----------------------------------------------------------------------------
  >>>>>COMPUTE TRAPEZOIDAL CHANNEL FLOW<<<<<
  >>>>>TRAVELTIME THRU SUBAREA (EXISTING ELEMENT)<<<<<
============================================================================
  ELEVATION DATA: UPSTREAM(FEET) =    100.00  DOWNSTREAM(FEET) =     60.00
  CHANNEL LENGTH THRU SUBAREA(FEET) =  1000.00   CHANNEL SLOPE =  0.0400
  CHANNEL BASE(FEET) =   10.00   "Z" FACTOR =   4.000
  MANNING'S FACTOR = 0.035   MAXIMUM DEPTH(FEET) =  10.00
   100 YEAR RAINFALL INTENSITY(INCH/HOUR) =  2.504
  *USER SPECIFIED(SUBAREA):
  RESIDENTIAL (1. DU/AC OR LESS) RUNOFF COEFFICIENT = .4500
  S.C.S. CURVE NUMBER (AMC II) =   0
  TRAVEL TIME COMPUTED USING ESTIMATED FLOW(CFS) =     271.67
  TRAVEL TIME THRU SUBAREA BASED ON VELOCITY(FEET/SEC.) =   9.52
  AVERAGE FLOW DEPTH(FEET) =   1.70   TRAVEL TIME(MIN.) =   1.75
  Tc(MIN.) =   19.95
  SUBAREA AREA(ACRES) =    25.90       SUBAREA RUNOFF(CFS) =   29.19
  AREA-AVERAGE RUNOFF COEFFICIENT =  0.475
  TOTAL AREA(ACRES) =      229.3         PEAK FLOW RATE(CFS) =     272.65

  END OF SUBAREA CHANNEL FLOW HYDRAULICS:
  DEPTH(FEET) =  1.70   FLOW VELOCITY(FEET/SEC.) =   9.51
  LONGEST FLOWPATH FROM NODE   1400.00 TO NODE   1420.00 =    4615.00 FEET.

****************************************************************************
  FLOW PROCESS FROM NODE   1420.00 TO NODE   1430.00 IS CODE =  51
----------------------------------------------------------------------------
  >>>>>COMPUTE TRAPEZOIDAL CHANNEL FLOW<<<<<
  >>>>>TRAVELTIME THRU SUBAREA (EXISTING ELEMENT)<<<<<
============================================================================
  ELEVATION DATA: UPSTREAM(FEET) =    100.00  DOWNSTREAM(FEET) =      0.00
  CHANNEL LENGTH THRU SUBAREA(FEET) =  2500.00   CHANNEL SLOPE =  0.0400
  CHANNEL BASE(FEET) =   10.00   "Z" FACTOR =   4.000
  MANNING'S FACTOR = 0.035   MAXIMUM DEPTH(FEET) =  10.00
   100 YEAR RAINFALL INTENSITY(INCH/HOUR) =  2.252
  *USER SPECIFIED(SUBAREA):
  RESIDENTIAL (1. DU/AC OR LESS) RUNOFF COEFFICIENT = .4500
  S.C.S. CURVE NUMBER (AMC II) =   0
  TRAVEL TIME COMPUTED USING ESTIMATED FLOW(CFS) =     318.60
  TRAVEL TIME THRU SUBAREA BASED ON VELOCITY(FEET/SEC.) =   9.96
  AVERAGE FLOW DEPTH(FEET) =   1.84   TRAVEL TIME(MIN.) =   4.18
```

```
  Tc(MIN.) =   24.13
  SUBAREA AREA(ACRES) =    90.60       SUBAREA RUNOFF(CFS) =   91.82
  AREA-AVERAGE RUNOFF COEFFICIENT =  0.468
  TOTAL AREA(ACRES) =      319.9         PEAK FLOW RATE(CFS) =     337.04

  END OF SUBAREA CHANNEL FLOW HYDRAULICS:
  DEPTH(FEET) =  1.89   FLOW VELOCITY(FEET/SEC.) =  10.12
  LONGEST FLOWPATH FROM NODE   1400.00 TO NODE   1430.00 =    7115.00 FEET.

****************************************************************************
  FLOW PROCESS FROM NODE   1430.00 TO NODE   1499.00 IS CODE =  31
----------------------------------------------------------------------------
  >>>>>COMPUTE PIPE-FLOW TRAVEL TIME THRU SUBAREA<<<<<
  >>>>>USING COMPUTER-ESTIMATED PIPESIZE (NON-PRESSURE FLOW)<<<<<
============================================================================
  ELEVATION DATA: UPSTREAM(FEET) =   100.00  DOWNSTREAM(FEET) =    92.50
  FLOW LENGTH(FEET) =   150.00   MANNING'S N =  0.013
  DEPTH OF FLOW IN  51.0 INCH PIPE IS  39.2 INCHES
  PIPE-FLOW VELOCITY(FEET/SEC.) =  28.77
  ESTIMATED PIPE DIAMETER(INCH) =  51.00    NUMBER OF PIPES =   1
  PIPE-FLOW(CFS) =     337.04
  PIPE TRAVEL TIME(MIN.) =   0.09    Tc(MIN.) =   24.22
  LONGEST FLOWPATH FROM NODE   1400.00 TO NODE   1499.00 =    7265.00 FEET.
============================================================================
  END OF STUDY SUMMARY:
  TOTAL AREA(ACRES)     =      319.9  TC(MIN.) =     24.22
  PEAK FLOW RATE(CFS)   =     337.04
============================================================================
============================================================================
  END OF RATIONAL METHOD ANALYSIS
```

This is Peak flow Rate at POC M.C.

APPENDIX B

Modified Rational Method Output
[Post-project Un-detained]

```
****************************************************************************

            RATIONAL METHOD HYDROLOGY COMPUTER PROGRAM PACKAGE
            Reference: SAN DIEGO COUNTY FLOOD CONTROL DISTRICT
                         2003,1985,1981 HYDROLOGY MANUAL
         (c) Copyright 1982-2003 Advanced Engineering Software (aes)
             Ver. 1.5A Release Date: 01/01/2003  License ID 1261

                           Analysis prepared by:

                          RICK ENGINEERING COMPANY
                              5620 Friars Road
                        San Diego, California 92110
                      619-291-0707   Fax 619-291-4165

 ************************* DESCRIPTION OF STUDY *************************
* J-15013C SOUTHWEST VILLAGE                                               *
* 100-YEAR, 6-HOUR STORM EVENT                                             *
* BASIN 100 POST-PROJECT                                                   *
 **************************************************************************

  FILE NAME: S101HP00.RAT
  TIME/DATE OF STUDY: 14:52 07/02/2020
----------------------------------------------------------------------------
  USER SPECIFIED HYDROLOGY AND HYDRAULIC MODEL INFORMATION:
----------------------------------------------------------------------------
  USER SPECIFIED STORM EVENT(YEAR) = 100.00
  SPECIFIED MINIMUM PIPE SIZE(INCH) =  18.00
  SPECIFIED PERCENT OF GRADIENTS(DECIMAL) TO USE FOR FRICTION SLOPE = 0.90
  RAINFALL-INTENSITY ADJUSTMENT FACTOR = 1.000
  *USER SPECIFIED:
  NUMBER OF [TIME,INTENSITY] DATA PAIRS =  9
   1)   5.000;  4.400
   2)  10.000;  3.450
   3)  15.000;  2.900
   4)  20.000;  2.500
   5)  25.000;  2.200
   6)  30.000;  2.000
   7)  40.000;  1.700
   8)  50.000;  1.500
   9)  60.000;  1.300
  SAN DIEGO HYDROLOGY MANUAL "C"-VALUES USED FOR RATIONAL METHOD
  NOTE: ONLY PEAK CONFLUENCE VALUES CONSIDERED
  *USER-DEFINED STREET-SECTIONS FOR COUPLED PIPEFLOW AND STREETFLOW MODEL*
     HALF-  CROWN TO   STREET-CROSSFALL:   CURB  GUTTER-GEOMETRIES:  MANNING
     WIDTH  CROSSFALL  IN-  / OUT-/PARK-  HEIGHT  WIDTH  LIP   HIKE  FACTOR
NO.   (FT)     (FT)    SIDE / SIDE/ WAY    (FT)    (FT)  (FT)  (FT)    (n)
===  =====  =========  ================   ======  ===== ====== ===== =======
  1   30.0     20.0    0.018/0.018/0.020   0.67    2.00 0.0313 0.167 0.0150
```

```
  2   20.0     15.0    0.020/0.020/0.020   0.50    1.50 0.0100 0.125 0.0180

  GLOBAL STREET FLOW-DEPTH CONSTRAINTS:
    1. Relative Flow-Depth = -0.10 FEET
       as (Maximum Allowable Street Flow Depth) - (Top-of-Curb)
    2. (Depth)*(Velocity) Constraint =  6.0 (FT*FT/S)
  *SIZE PIPE WITH A FLOW CAPACITY GREATER THAN
   OR EQUAL TO THE UPSTREAM TRIBUTARY PIPE.*

****************************************************************************
  FLOW PROCESS FROM NODE    100.00 TO NODE    102.00 IS CODE =  21
----------------------------------------------------------------------------
  >>>>>RATIONAL METHOD INITIAL SUBAREA ANALYSIS<<<<<
============================================================================
  *USER SPECIFIED(SUBAREA):
  RURAL DEVELOPMENT RUNOFF COEFFICIENT = .4500
  S.C.S. CURVE NUMBER (AMC II) =   0
  INITIAL SUBAREA FLOW-LENGTH(FEET) =    75.00
  UPSTREAM ELEVATION(FEET) =    533.00
  DOWNSTREAM ELEVATION(FEET) =    532.00
  ELEVATION DIFFERENCE(FEET) =      1.00
  URBAN SUBAREA OVERLAND TIME OF FLOW(MIN.) =    9.206
   100 YEAR RAINFALL INTENSITY(INCH/HOUR) =  3.601
  SUBAREA RUNOFF(CFS) =      0.16
  TOTAL AREA(ACRES) =      0.10   TOTAL RUNOFF(CFS) =      0.16

****************************************************************************
  FLOW PROCESS FROM NODE    102.00 TO NODE    105.00 IS CODE =  51
----------------------------------------------------------------------------
  >>>>>COMPUTE TRAPEZOIDAL CHANNEL FLOW<<<<<
  >>>>>TRAVELTIME THRU SUBAREA (EXISTING ELEMENT)<<<<<
============================================================================
  ELEVATION DATA: UPSTREAM(FEET) =    532.00  DOWNSTREAM(FEET) =    504.00
  CHANNEL LENGTH THRU SUBAREA(FEET) =   629.00   CHANNEL SLOPE =  0.0445
  CHANNEL BASE(FEET) =    5.00   "Z" FACTOR =  10.000
  MANNING'S FACTOR = 0.025   MAXIMUM DEPTH(FEET) =  10.00
   100 YEAR RAINFALL INTENSITY(INCH/HOUR) =  3.214
  *USER SPECIFIED(SUBAREA):
  RURAL DEVELOPMENT RUNOFF COEFFICIENT = .4500
  S.C.S. CURVE NUMBER (AMC II) =   0
  TRAVEL TIME COMPUTED USING ESTIMATED FLOW(CFS) =      5.03
  TRAVEL TIME THRU SUBAREA BASED ON VELOCITY(FEET/SEC.) =   3.56
  AVERAGE FLOW DEPTH(FEET) =   0.20   TRAVEL TIME(MIN.) =   2.94
  Tc(MIN.) =  12.15
  SUBAREA AREA(ACRES) =     6.70       SUBAREA RUNOFF(CFS) =    9.69
  TOTAL AREA(ACRES) =      6.80         PEAK FLOW RATE(CFS) =       9.85

  END OF SUBAREA CHANNEL FLOW HYDRAULICS:
  DEPTH(FEET) =  0.29   FLOW VELOCITY(FEET/SEC.) =   4.40
  LONGEST FLOWPATH FROM NODE    100.00 TO NODE    105.00 =   704.00 FEET.
```

```
****************************************************************************
  FLOW PROCESS FROM NODE    105.00 TO NODE    110.00 IS CODE =  51
----------------------------------------------------------------------------
  >>>>>COMPUTE TRAPEZOIDAL CHANNEL FLOW<<<<<
  >>>>>TRAVELTIME THRU SUBAREA (EXISTING ELEMENT)<<<<<
============================================================================
  ELEVATION DATA: UPSTREAM(FEET) =    504.00  DOWNSTREAM(FEET) =    478.00
  CHANNEL LENGTH THRU SUBAREA(FEET) =   332.00   CHANNEL SLOPE =  0.0783
  CHANNEL BASE(FEET) =    3.00   "Z" FACTOR =   5.000
  MANNING'S FACTOR = 0.025   MAXIMUM DEPTH(FEET) =  10.00
   100 YEAR RAINFALL INTENSITY(INCH/HOUR) =  3.121
  *USER SPECIFIED(SUBAREA):
  RURAL DEVELOPMENT RUNOFF COEFFICIENT = .4500
  S.C.S. CURVE NUMBER (AMC II) =   0
  TRAVEL TIME COMPUTED USING ESTIMATED FLOW(CFS) =     10.55
  TRAVEL TIME THRU SUBAREA BASED ON VELOCITY(FEET/SEC.) =   6.59
  AVERAGE FLOW DEPTH(FEET) =   0.34   TRAVEL TIME(MIN.) =   0.84
  Tc(MIN.) =  12.99
  SUBAREA AREA(ACRES) =     1.00       SUBAREA RUNOFF(CFS) =    1.40
  TOTAL AREA(ACRES) =      7.80         PEAK FLOW RATE(CFS) =      11.26

  END OF SUBAREA CHANNEL FLOW HYDRAULICS:
  DEPTH(FEET) =  0.35   FLOW VELOCITY(FEET/SEC.) =   6.67
  LONGEST FLOWPATH FROM NODE    100.00 TO NODE    110.00 =  1036.00 FEET.

****************************************************************************
  FLOW PROCESS FROM NODE    110.00 TO NODE    115.00 IS CODE =  51
----------------------------------------------------------------------------
  >>>>>COMPUTE TRAPEZOIDAL CHANNEL FLOW<<<<<
  >>>>>TRAVELTIME THRU SUBAREA (EXISTING ELEMENT)<<<<<
============================================================================
  ELEVATION DATA: UPSTREAM(FEET) =    478.00  DOWNSTREAM(FEET) =    472.00
  CHANNEL LENGTH THRU SUBAREA(FEET) =   145.00   CHANNEL SLOPE =  0.0414
  CHANNEL BASE(FEET) =    5.00   "Z" FACTOR =   5.000
  MANNING'S FACTOR = 0.025   MAXIMUM DEPTH(FEET) =  10.00
   100 YEAR RAINFALL INTENSITY(INCH/HOUR) =  3.069
  *USER SPECIFIED(SUBAREA):
  RURAL DEVELOPMENT RUNOFF COEFFICIENT = .4500
  S.C.S. CURVE NUMBER (AMC II) =   0
  TRAVEL TIME COMPUTED USING ESTIMATED FLOW(CFS) =     11.60
  TRAVEL TIME THRU SUBAREA BASED ON VELOCITY(FEET/SEC.) =   5.08
  AVERAGE FLOW DEPTH(FEET) =   0.34   TRAVEL TIME(MIN.) =   0.48
  Tc(MIN.) =  13.46
  SUBAREA AREA(ACRES) =     0.50       SUBAREA RUNOFF(CFS) =    0.69
  TOTAL AREA(ACRES) =      8.30         PEAK FLOW RATE(CFS) =      11.95

  END OF SUBAREA CHANNEL FLOW HYDRAULICS:
  DEPTH(FEET) =  0.35   FLOW VELOCITY(FEET/SEC.) =   5.09
  LONGEST FLOWPATH FROM NODE    100.00 TO NODE    115.00 =  1181.00 FEET.
```

```
****************************************************************************
  FLOW PROCESS FROM NODE    115.00 TO NODE    170.00 IS CODE =  41
----------------------------------------------------------------------------
  >>>>>COMPUTE PIPE-FLOW TRAVEL TIME THRU SUBAREA<<<<<
  >>>>>USING USER-SPECIFIED PIPESIZE (EXISTING ELEMENT)<<<<<
============================================================================
  ELEVATION DATA: UPSTREAM(FEET) =   468.00  DOWNSTREAM(FEET) =   467.00
  FLOW LENGTH(FEET) =   127.00   MANNING'S N =  0.013
  DEPTH OF FLOW IN  24.0 INCH PIPE IS  13.8 INCHES
  PIPE-FLOW VELOCITY(FEET/SEC.) =   6.40
  GIVEN PIPE DIAMETER(INCH) =  24.00    NUMBER OF PIPES =   1
  PIPE-FLOW(CFS) =     11.95
  PIPE TRAVEL TIME(MIN.) =   0.33    Tc(MIN.) =  13.79
  LONGEST FLOWPATH FROM NODE    100.00 TO NODE    170.00 =  1308.00 FEET.

****************************************************************************
  FLOW PROCESS FROM NODE    170.00 TO NODE    170.00 IS CODE =   1
----------------------------------------------------------------------------
  >>>>>DESIGNATE INDEPENDENT STREAM FOR CONFLUENCE<<<<<
============================================================================
  TOTAL NUMBER OF STREAMS =  3
  CONFLUENCE VALUES USED FOR INDEPENDENT STREAM  1 ARE:
  TIME OF CONCENTRATION(MIN.) =  13.79
  RAINFALL INTENSITY(INCH/HR) =   3.03
  TOTAL STREAM AREA(ACRES) =     8.30
  PEAK FLOW RATE(CFS) AT CONFLUENCE =     11.95

****************************************************************************
  FLOW PROCESS FROM NODE    120.00 TO NODE    122.00 IS CODE =  21
----------------------------------------------------------------------------
  >>>>>RATIONAL METHOD INITIAL SUBAREA ANALYSIS<<<<<
============================================================================
  *USER SPECIFIED(SUBAREA):
  INDUSTRIAL DEVELOPMENT RUNOFF COEFFICIENT = .4500
  S.C.S. CURVE NUMBER (AMC II) =   0
  INITIAL SUBAREA FLOW-LENGTH(FEET) =    93.00
  UPSTREAM ELEVATION(FEET) =    503.00
  DOWNSTREAM ELEVATION(FEET) =    498.00
  ELEVATION DIFFERENCE(FEET) =      5.00
  URBAN SUBAREA OVERLAND TIME OF FLOW(MIN.) =    6.441
  *CAUTION: SUBAREA SLOPE EXCEEDS COUNTY NOMOGRAPH
   DEFINITION. EXTRAPOLATION OF NOMOGRAPH USED.
   100 YEAR RAINFALL INTENSITY(INCH/HOUR) =  4.126
  SUBAREA RUNOFF(CFS) =      0.19
  TOTAL AREA(ACRES) =      0.10   TOTAL RUNOFF(CFS) =      0.19

****************************************************************************
  FLOW PROCESS FROM NODE    122.00 TO NODE    125.00 IS CODE =  51
----------------------------------------------------------------------------
```

```
  >>>>>COMPUTE TRAPEZOIDAL CHANNEL FLOW<<<<<
  >>>>>TRAVELTIME THRU SUBAREA (EXISTING ELEMENT)<<<<<
============================================================================
  ELEVATION DATA: UPSTREAM(FEET) =    498.00  DOWNSTREAM(FEET) =    474.00
  CHANNEL LENGTH THRU SUBAREA(FEET) =    98.00   CHANNEL SLOPE =  0.2449
  CHANNEL BASE(FEET) =   10.00   "Z" FACTOR =  12.000
  MANNING'S FACTOR = 0.025   MAXIMUM DEPTH(FEET) =   5.00
   100 YEAR RAINFALL INTENSITY(INCH/HOUR) =  3.969
  *USER SPECIFIED(SUBAREA):
  RURAL DEVELOPMENT RUNOFF COEFFICIENT = .4500
  S.C.S. CURVE NUMBER (AMC II) =   0
  TRAVEL TIME COMPUTED USING ESTIMATED FLOW(CFS) =      0.36
  TRAVEL TIME THRU SUBAREA BASED ON VELOCITY(FEET/SEC.) =   1.97
  AVERAGE FLOW DEPTH(FEET) =   0.02   TRAVEL TIME(MIN.) =   0.83
  Tc(MIN.) =   7.27
  SUBAREA AREA(ACRES) =     0.20       SUBAREA RUNOFF(CFS) =    0.36
  TOTAL AREA(ACRES) =      0.30         PEAK FLOW RATE(CFS) =       0.54

  END OF SUBAREA CHANNEL FLOW HYDRAULICS:
  DEPTH(FEET) =  0.02   FLOW VELOCITY(FEET/SEC.) =   2.65
  LONGEST FLOWPATH FROM NODE    120.00 TO NODE    125.00 =   191.00 FEET.

****************************************************************************
  FLOW PROCESS FROM NODE    125.00 TO NODE    127.00 IS CODE =  41
----------------------------------------------------------------------------
  >>>>>COMPUTE PIPE-FLOW TRAVEL TIME THRU SUBAREA<<<<<
  >>>>>USING USER-SPECIFIED PIPESIZE (EXISTING ELEMENT)<<<<<
============================================================================
  ELEVATION DATA: UPSTREAM(FEET) =   470.00  DOWNSTREAM(FEET) =   468.00
  FLOW LENGTH(FEET) =   331.00   MANNING'S N =  0.013
  DEPTH OF FLOW IN  18.0 INCH PIPE IS   3.2 INCHES
  PIPE-FLOW VELOCITY(FEET/SEC.) =   2.51
  GIVEN PIPE DIAMETER(INCH) =  18.00    NUMBER OF PIPES =   1
  PIPE-FLOW(CFS) =      0.54
  PIPE TRAVEL TIME(MIN.) =   2.19    Tc(MIN.) =   9.46
  LONGEST FLOWPATH FROM NODE    120.00 TO NODE    127.00 =   522.00 FEET.

****************************************************************************
  FLOW PROCESS FROM NODE    127.00 TO NODE    127.00 IS CODE =  81
----------------------------------------------------------------------------
  >>>>>ADDITION OF SUBAREA TO MAINLINE PEAK FLOW<<<<<
============================================================================
   100 YEAR RAINFALL INTENSITY(INCH/HOUR) =  3.552
  *USER SPECIFIED(SUBAREA):
  RURAL DEVELOPMENT RUNOFF COEFFICIENT = .4500
  S.C.S. CURVE NUMBER (AMC II) =   0
  SUBAREA AREA(ACRES) =    0.40   SUBAREA RUNOFF(CFS) =    0.64
  TOTAL AREA(ACRES) =      0.70   TOTAL RUNOFF(CFS) =    1.18
  TC(MIN.) =   9.46
```

```
****************************************************************************
  FLOW PROCESS FROM NODE    127.00 TO NODE    170.00 IS CODE =  41
----------------------------------------------------------------------------
  >>>>>COMPUTE PIPE-FLOW TRAVEL TIME THRU SUBAREA<<<<<
  >>>>>USING USER-SPECIFIED PIPESIZE (EXISTING ELEMENT)<<<<<
============================================================================
  ELEVATION DATA: UPSTREAM(FEET) =   468.00  DOWNSTREAM(FEET) =   467.00
  FLOW LENGTH(FEET) =    72.00   MANNING'S N =  0.013
  DEPTH OF FLOW IN  18.0 INCH PIPE IS   3.9 INCHES
  PIPE-FLOW VELOCITY(FEET/SEC.) =   4.27
  GIVEN PIPE DIAMETER(INCH) =  18.00    NUMBER OF PIPES =   1
  PIPE-FLOW(CFS) =      1.18
  PIPE TRAVEL TIME(MIN.) =   0.28    Tc(MIN.) =   9.75
  LONGEST FLOWPATH FROM NODE    120.00 TO NODE    170.00 =   594.00 FEET.

****************************************************************************
  FLOW PROCESS FROM NODE    170.00 TO NODE    170.00 IS CODE =   1
----------------------------------------------------------------------------
  >>>>>DESIGNATE INDEPENDENT STREAM FOR CONFLUENCE<<<<<
============================================================================
  TOTAL NUMBER OF STREAMS =  3
  CONFLUENCE VALUES USED FOR INDEPENDENT STREAM  2 ARE:
  TIME OF CONCENTRATION(MIN.) =   9.75
  RAINFALL INTENSITY(INCH/HR) =   3.50
  TOTAL STREAM AREA(ACRES) =     0.70
  PEAK FLOW RATE(CFS) AT CONFLUENCE =      1.18

****************************************************************************
  FLOW PROCESS FROM NODE    130.00 TO NODE    132.00 IS CODE =  21
----------------------------------------------------------------------------
  >>>>>RATIONAL METHOD INITIAL SUBAREA ANALYSIS<<<<<
============================================================================
  *USER SPECIFIED(SUBAREA):
  INDUSTRIAL DEVELOPMENT RUNOFF COEFFICIENT = .9500
  S.C.S. CURVE NUMBER (AMC II) =   0
  INITIAL SUBAREA FLOW-LENGTH(FEET) =    94.00
  UPSTREAM ELEVATION(FEET) =    492.00
  DOWNSTREAM ELEVATION(FEET) =    491.00
  ELEVATION DIFFERENCE(FEET) =      1.00
  URBAN SUBAREA OVERLAND TIME OF FLOW(MIN.) =    2.564
  TIME OF CONCENTRATION ASSUMED AS 6-MIN.
   100 YEAR RAINFALL INTENSITY(INCH/HOUR) =  4.210
  SUBAREA RUNOFF(CFS) =      0.40
  TOTAL AREA(ACRES) =      0.10   TOTAL RUNOFF(CFS) =      0.40

****************************************************************************
  FLOW PROCESS FROM NODE    132.00 TO NODE    135.00 IS CODE =  62
----------------------------------------------------------------------------
  >>>>>COMPUTE STREET FLOW TRAVEL TIME THRU SUBAREA<<<<<
  >>>>>(STREET TABLE SECTION #  2 USED)<<<<<
```

```
============================================================================
  UPSTREAM ELEVATION(FEET) =  491.00  DOWNSTREAM ELEVATION(FEET) =  489.50
  STREET LENGTH(FEET) =   341.00   CURB HEIGHT(INCHES) =  6.0
  STREET HALFWIDTH(FEET) = 20.00

  DISTANCE FROM CROWN TO CROSSFALL GRADEBREAK(FEET) =  15.00
  INSIDE STREET CROSSFALL(DECIMAL) =  0.020
  OUTSIDE STREET CROSSFALL(DECIMAL)  =  0.020

  SPECIFIED NUMBER OF HALFSTREETS CARRYING RUNOFF =  2
  STREET PARKWAY CROSSFALL(DECIMAL)  =  0.020
  Manning's FRICTION FACTOR for Streetflow Section(curb-to-curb) =   0.0180
  Manning's FRICTION FACTOR for Back-of-Walk Flow Section =   0.0200

    **TRAVEL TIME COMPUTED USING ESTIMATED FLOW(CFS) =       0.71
    STREETFLOW MODEL RESULTS USING ESTIMATED FLOW:
    STREET FLOW DEPTH(FEET) =  0.21
    HALFSTREET FLOOD WIDTH(FEET) =    5.50
    AVERAGE FLOW VELOCITY(FEET/SEC.) =    0.91
    PRODUCT OF DEPTH&VELOCITY(FT*FT/SEC.) =    0.20
  STREET FLOW TRAVEL TIME(MIN.) =   6.26   Tc(MIN.) =  12.26
   100 YEAR RAINFALL INTENSITY(INCH/HOUR) =  3.202
  *USER SPECIFIED(SUBAREA):
  INDUSTRIAL DEVELOPMENT RUNOFF COEFFICIENT = .9500
  S.C.S. CURVE NUMBER (AMC II) =   0
  SUBAREA AREA(ACRES) =    0.20      SUBAREA RUNOFF(CFS) =    0.61
  TOTAL AREA(ACRES) =      0.30        PEAK FLOW RATE(CFS) =       1.01

  END OF SUBAREA STREET FLOW HYDRAULICS:
  DEPTH(FEET) = 0.24   HALFSTREET FLOOD WIDTH(FEET) =   6.55
  FLOW VELOCITY(FEET/SEC.) =  0.98   DEPTH*VELOCITY(FT*FT/SEC.) =   0.23
  LONGEST FLOWPATH FROM NODE    130.00 TO NODE    135.00 =   435.00 FEET.

****************************************************************************
  FLOW PROCESS FROM NODE    135.00 TO NODE    135.00 IS CODE =  81
----------------------------------------------------------------------------
  >>>>>ADDITION OF SUBAREA TO MAINLINE PEAK FLOW<<<<<
============================================================================
   100 YEAR RAINFALL INTENSITY(INCH/HOUR) =  3.202
  *USER SPECIFIED(SUBAREA):
  SINGLE FAMILY DEVELOPMENT RUNOFF COEFFICIENT = .7900
  S.C.S. CURVE NUMBER (AMC II) =   0
  SUBAREA AREA(ACRES) =    1.10   SUBAREA RUNOFF(CFS) =    2.78
  TOTAL AREA(ACRES) =      1.40   TOTAL RUNOFF(CFS) =    3.79
  TC(MIN.) =  12.26

****************************************************************************
  FLOW PROCESS FROM NODE    135.00 TO NODE    140.00 IS CODE =  41
----------------------------------------------------------------------------
  >>>>>COMPUTE PIPE-FLOW TRAVEL TIME THRU SUBAREA<<<<<
```

```
  >>>>>USING USER-SPECIFIED PIPESIZE (EXISTING ELEMENT)<<<<<
============================================================================
  ELEVATION DATA: UPSTREAM(FEET) =   485.00  DOWNSTREAM(FEET) =   484.50
  FLOW LENGTH(FEET) =     3.00   MANNING'S N =  0.013
  DEPTH OF FLOW IN  24.0 INCH PIPE IS   3.4 INCHES
  PIPE-FLOW VELOCITY(FEET/SEC.) =  13.94
  GIVEN PIPE DIAMETER(INCH) =  24.00    NUMBER OF PIPES =   1
  PIPE-FLOW(CFS) =      3.79
  PIPE TRAVEL TIME(MIN.) =   0.00    Tc(MIN.) =  12.26
  LONGEST FLOWPATH FROM NODE    130.00 TO NODE    140.00 =   438.00 FEET.

****************************************************************************
  FLOW PROCESS FROM NODE    140.00 TO NODE    140.00 IS CODE =  81
----------------------------------------------------------------------------
  >>>>>ADDITION OF SUBAREA TO MAINLINE PEAK FLOW<<<<<
============================================================================
   100 YEAR RAINFALL INTENSITY(INCH/HOUR) =  3.201
  *USER SPECIFIED(SUBAREA):
  SINGLE FAMILY DEVELOPMENT RUNOFF COEFFICIENT = .8000
  S.C.S. CURVE NUMBER (AMC II) =   0
  SUBAREA AREA(ACRES) =    0.80   SUBAREA RUNOFF(CFS) =    2.05
  TOTAL AREA(ACRES) =      2.20   TOTAL RUNOFF(CFS) =    5.84
  TC(MIN.) =  12.26

****************************************************************************
  FLOW PROCESS FROM NODE    140.00 TO NODE    150.00 IS CODE =  41
----------------------------------------------------------------------------
  >>>>>COMPUTE PIPE-FLOW TRAVEL TIME THRU SUBAREA<<<<<
  >>>>>USING USER-SPECIFIED PIPESIZE (EXISTING ELEMENT)<<<<<
============================================================================
  ELEVATION DATA: UPSTREAM(FEET) =   484.50  DOWNSTREAM(FEET) =   482.50
  FLOW LENGTH(FEET) =   140.00   MANNING'S N =  0.013
  DEPTH OF FLOW IN  24.0 INCH PIPE IS   7.8 INCHES
  PIPE-FLOW VELOCITY(FEET/SEC.) =   6.61
  GIVEN PIPE DIAMETER(INCH) =  24.00    NUMBER OF PIPES =   1
  PIPE-FLOW(CFS) =      5.84
  PIPE TRAVEL TIME(MIN.) =   0.35    Tc(MIN.) =  12.61
  LONGEST FLOWPATH FROM NODE    130.00 TO NODE    150.00 =   578.00 FEET.

****************************************************************************
  FLOW PROCESS FROM NODE    150.00 TO NODE    150.00 IS CODE =  81
----------------------------------------------------------------------------
  >>>>>ADDITION OF SUBAREA TO MAINLINE PEAK FLOW<<<<<
============================================================================
   100 YEAR RAINFALL INTENSITY(INCH/HOUR) =  3.163
  *USER SPECIFIED(SUBAREA):
  SINGLE FAMILY DEVELOPMENT RUNOFF COEFFICIENT = .7500
  S.C.S. CURVE NUMBER (AMC II) =   0
  SUBAREA AREA(ACRES) =    0.20   SUBAREA RUNOFF(CFS) =    0.47
  TOTAL AREA(ACRES) =      2.40   TOTAL RUNOFF(CFS) =    6.31
```

```
  TC(MIN.) =  12.61

****************************************************************************
  FLOW PROCESS FROM NODE    150.00 TO NODE    150.00 IS CODE =  81
----------------------------------------------------------------------------
  >>>>>ADDITION OF SUBAREA TO MAINLINE PEAK FLOW<<<<<
============================================================================
   100 YEAR RAINFALL INTENSITY(INCH/HOUR) =  3.163
  *USER SPECIFIED(SUBAREA):
  SINGLE FAMILY DEVELOPMENT RUNOFF COEFFICIENT = .8500
  S.C.S. CURVE NUMBER (AMC II) =   0
  SUBAREA AREA(ACRES) =    1.30   SUBAREA RUNOFF(CFS) =    3.49
  TOTAL AREA(ACRES) =      3.70   TOTAL RUNOFF(CFS) =    9.81
  TC(MIN.) =  12.61

****************************************************************************
  FLOW PROCESS FROM NODE    150.00 TO NODE    160.00 IS CODE =  41
----------------------------------------------------------------------------
  >>>>>COMPUTE PIPE-FLOW TRAVEL TIME THRU SUBAREA<<<<<
  >>>>>USING USER-SPECIFIED PIPESIZE (EXISTING ELEMENT)<<<<<
============================================================================
  ELEVATION DATA: UPSTREAM(FEET) =   482.50  DOWNSTREAM(FEET) =   482.00
  FLOW LENGTH(FEET) =    30.00   MANNING'S N =  0.013
  DEPTH OF FLOW IN  24.0 INCH PIPE IS   9.9 INCHES
  PIPE-FLOW VELOCITY(FEET/SEC.) =   8.07
  GIVEN PIPE DIAMETER(INCH) =  24.00    NUMBER OF PIPES =   1
  PIPE-FLOW(CFS) =      9.81
  PIPE TRAVEL TIME(MIN.) =   0.06    Tc(MIN.) =  12.67
  LONGEST FLOWPATH FROM NODE    130.00 TO NODE    160.00 =   608.00 FEET.

****************************************************************************
  FLOW PROCESS FROM NODE    160.00 TO NODE    160.00 IS CODE =  81
----------------------------------------------------------------------------
  >>>>>ADDITION OF SUBAREA TO MAINLINE PEAK FLOW<<<<<
============================================================================
   100 YEAR RAINFALL INTENSITY(INCH/HOUR) =  3.156
  *USER SPECIFIED(SUBAREA):
  SINGLE FAMILY DEVELOPMENT RUNOFF COEFFICIENT = .8000
  S.C.S. CURVE NUMBER (AMC II) =   0
  SUBAREA AREA(ACRES) =    0.80   SUBAREA RUNOFF(CFS) =    2.02
  TOTAL AREA(ACRES) =      4.50   TOTAL RUNOFF(CFS) =   11.83
  TC(MIN.) =  12.67

****************************************************************************
  FLOW PROCESS FROM NODE    160.00 TO NODE    160.00 IS CODE =  81
----------------------------------------------------------------------------
  >>>>>ADDITION OF SUBAREA TO MAINLINE PEAK FLOW<<<<<
============================================================================
   100 YEAR RAINFALL INTENSITY(INCH/HOUR) =  3.156
  *USER SPECIFIED(SUBAREA):
```

```
  SINGLE FAMILY DEVELOPMENT RUNOFF COEFFICIENT = .8400
  S.C.S. CURVE NUMBER (AMC II) =   0
  SUBAREA AREA(ACRES) =    0.90   SUBAREA RUNOFF(CFS) =    2.39
  TOTAL AREA(ACRES) =      5.40   TOTAL RUNOFF(CFS) =   14.21
  TC(MIN.) =  12.67

****************************************************************************
  FLOW PROCESS FROM NODE    160.00 TO NODE    170.00 IS CODE =  41
----------------------------------------------------------------------------
  >>>>>COMPUTE PIPE-FLOW TRAVEL TIME THRU SUBAREA<<<<<
  >>>>>USING USER-SPECIFIED PIPESIZE (EXISTING ELEMENT)<<<<<
============================================================================
  ELEVATION DATA: UPSTREAM(FEET) =   482.00  DOWNSTREAM(FEET) =   467.00
  FLOW LENGTH(FEET) =   125.00   MANNING'S N =  0.013
  DEPTH OF FLOW IN  24.0 INCH PIPE IS   7.1 INCHES
  PIPE-FLOW VELOCITY(FEET/SEC.) =  18.27
  GIVEN PIPE DIAMETER(INCH) =  24.00    NUMBER OF PIPES =   1
  PIPE-FLOW(CFS) =     14.21
  PIPE TRAVEL TIME(MIN.) =   0.11    Tc(MIN.) =  12.79
  LONGEST FLOWPATH FROM NODE    130.00 TO NODE    170.00 =   733.00 FEET.

****************************************************************************
  FLOW PROCESS FROM NODE    170.00 TO NODE    170.00 IS CODE =   1
----------------------------------------------------------------------------
  >>>>>DESIGNATE INDEPENDENT STREAM FOR CONFLUENCE<<<<<
  >>>>>AND COMPUTE VARIOUS CONFLUENCED STREAM VALUES<<<<<
============================================================================
  TOTAL NUMBER OF STREAMS =  3
  CONFLUENCE VALUES USED FOR INDEPENDENT STREAM  3 ARE:
  TIME OF CONCENTRATION(MIN.) =  12.79
  RAINFALL INTENSITY(INCH/HR) =   3.14
  TOTAL STREAM AREA(ACRES) =     5.40
  PEAK FLOW RATE(CFS) AT CONFLUENCE =     14.21

  ** CONFLUENCE DATA **
  STREAM     RUNOFF      Tc      INTENSITY      AREA
  NUMBER      (CFS)    (MIN.)   (INCH/HOUR)    (ACRE)
     1       11.95    13.79        3.033          8.30
     2        1.18     9.75        3.498          0.70
     3       14.21    12.79        3.143          5.40

  RAINFALL INTENSITY AND TIME OF CONCENTRATION RATIO
  CONFLUENCE FORMULA USED FOR  3 STREAMS.

  ** PEAK FLOW RATE TABLE **
  STREAM     RUNOFF      Tc      INTENSITY
  NUMBER      (CFS)    (MIN.)   (INCH/HOUR)
     1       24.31     9.75       3.498
     2       26.80    12.79       3.143
     3       26.69    13.79       3.033
```

```
  COMPUTED CONFLUENCE ESTIMATES ARE AS FOLLOWS:
  PEAK FLOW RATE(CFS) =     26.80   Tc(MIN.) =   12.79
  TOTAL AREA(ACRES) =     14.40
  LONGEST FLOWPATH FROM NODE    100.00 TO NODE    170.00 =  1308.00 FEET.

****************************************************************************
  FLOW PROCESS FROM NODE    170.00 TO NODE    170.00 IS CODE =  81
----------------------------------------------------------------------------
  >>>>>ADDITION OF SUBAREA TO MAINLINE PEAK FLOW<<<<<
============================================================================
   100 YEAR RAINFALL INTENSITY(INCH/HOUR) =  3.143
  *USER SPECIFIED(SUBAREA):
  RURAL DEVELOPMENT RUNOFF COEFFICIENT = .4500
  S.C.S. CURVE NUMBER (AMC II) =   0
  SUBAREA AREA(ACRES) =    0.40   SUBAREA RUNOFF(CFS) =    0.57
  TOTAL AREA(ACRES) =     14.80   TOTAL RUNOFF(CFS) =   27.37
  TC(MIN.) =  12.79

****************************************************************************
  FLOW PROCESS FROM NODE    170.00 TO NODE    170.00 IS CODE =  81
----------------------------------------------------------------------------
  >>>>>ADDITION OF SUBAREA TO MAINLINE PEAK FLOW<<<<<
============================================================================
   100 YEAR RAINFALL INTENSITY(INCH/HOUR) =  3.143
  *USER SPECIFIED(SUBAREA):
  RURAL DEVELOPMENT RUNOFF COEFFICIENT = .4500
  S.C.S. CURVE NUMBER (AMC II) =   0
  SUBAREA AREA(ACRES) =    0.40   SUBAREA RUNOFF(CFS) =    0.57
  TOTAL AREA(ACRES) =     15.20   TOTAL RUNOFF(CFS) =   27.93
  TC(MIN.) =  12.79

****************************************************************************
  FLOW PROCESS FROM NODE    170.00 TO NODE    180.00 IS CODE =  41
----------------------------------------------------------------------------
  >>>>>COMPUTE PIPE-FLOW TRAVEL TIME THRU SUBAREA<<<<<
  >>>>>USING USER-SPECIFIED PIPESIZE (EXISTING ELEMENT)<<<<<
============================================================================
  ELEVATION DATA: UPSTREAM(FEET) =   467.00  DOWNSTREAM(FEET) =   400.00
  FLOW LENGTH(FEET) =   172.00   MANNING'S N =  0.013
  DEPTH OF FLOW IN  36.0 INCH PIPE IS   6.5 INCHES
  PIPE-FLOW VELOCITY(FEET/SEC.) =  32.32
  GIVEN PIPE DIAMETER(INCH) =  36.00    NUMBER OF PIPES =   1
  PIPE-FLOW(CFS) =     27.93
  PIPE TRAVEL TIME(MIN.) =   0.09    Tc(MIN.) =  12.88
  LONGEST FLOWPATH FROM NODE    100.00 TO NODE    180.00 =  1480.00 FEET.

****************************************************************************
  FLOW PROCESS FROM NODE    180.00 TO NODE    180.00 IS CODE =  81
----------------------------------------------------------------------------
```

```
  >>>>>ADDITION OF SUBAREA TO MAINLINE PEAK FLOW<<<<<
============================================================================
   100 YEAR RAINFALL INTENSITY(INCH/HOUR) =  3.133
  *USER SPECIFIED(SUBAREA):
  RURAL DEVELOPMENT RUNOFF COEFFICIENT = .4500
  S.C.S. CURVE NUMBER (AMC II) =   0
  SUBAREA AREA(ACRES) =    0.80   SUBAREA RUNOFF(CFS) =    1.13
  TOTAL AREA(ACRES) =     16.00   TOTAL RUNOFF(CFS) =   29.06
  TC(MIN.) =  12.88

****************************************************************************
  FLOW PROCESS FROM NODE    180.00 TO NODE    180.00 IS CODE =  81
----------------------------------------------------------------------------
  >>>>>ADDITION OF SUBAREA TO MAINLINE PEAK FLOW<<<<<
============================================================================
   100 YEAR RAINFALL INTENSITY(INCH/HOUR) =  3.133
  *USER SPECIFIED(SUBAREA):
  RURAL DEVELOPMENT RUNOFF COEFFICIENT = .4500
  S.C.S. CURVE NUMBER (AMC II) =   0
  SUBAREA AREA(ACRES) =    0.50   SUBAREA RUNOFF(CFS) =    0.71
  TOTAL AREA(ACRES) =     16.50   TOTAL RUNOFF(CFS) =   29.77
  TC(MIN.) =  12.88
============================================================================
  END OF STUDY SUMMARY:
  TOTAL AREA(ACRES)     =     16.50  TC(MIN.) =     12.88
  PEAK FLOW RATE(CFS)   =     29.77
============================================================================
============================================================================
  END OF RATIONAL METHOD ANALYSIS
```

```
****************************************************************************

            RATIONAL METHOD HYDROLOGY COMPUTER PROGRAM PACKAGE
            Reference: SAN DIEGO COUNTY FLOOD CONTROL DISTRICT
                         2003,1985,1981 HYDROLOGY MANUAL
         (c) Copyright 1982-2003 Advanced Engineering Software (aes)
             Ver. 1.5A Release Date: 01/01/2003  License ID 1261

                           Analysis prepared by:

                          RICK ENGINEERING COMPANY
                              5620 Friars Road
                        San Diego, California 92110
                      619-291-0707   Fax 619-291-4165

 ************************* DESCRIPTION OF STUDY *************************
* J-15013C SOUTHWEST VILLAGE                                               *
* 100-YEAR, 6-HOUR STORM EVENT / C=0.45 FOR OFFSITE AREAS                  *
* BASIN 200 POST PROJECT                                                   *
 **************************************************************************

  FILE NAME: S102HP00.RAT
  TIME/DATE OF STUDY: 15:25 07/06/2020
----------------------------------------------------------------------------
  USER SPECIFIED HYDROLOGY AND HYDRAULIC MODEL INFORMATION:
----------------------------------------------------------------------------
  USER SPECIFIED STORM EVENT(YEAR) = 100.00
  SPECIFIED MINIMUM PIPE SIZE(INCH) =  18.00
  SPECIFIED PERCENT OF GRADIENTS(DECIMAL) TO USE FOR FRICTION SLOPE = 0.90
  RAINFALL-INTENSITY ADJUSTMENT FACTOR = 1.000
  *USER SPECIFIED:
  NUMBER OF [TIME,INTENSITY] DATA PAIRS =  9
   1)   5.000;  4.400
   2)  10.000;  3.450
   3)  15.000;  2.900
   4)  20.000;  2.500
   5)  25.000;  2.200
   6)  30.000;  2.000
   7)  40.000;  1.700
   8)  50.000;  1.500
   9)  60.000;  1.300
  SAN DIEGO HYDROLOGY MANUAL "C"-VALUES USED FOR RATIONAL METHOD
  NOTE: ONLY PEAK CONFLUENCE VALUES CONSIDERED
  *USER-DEFINED STREET-SECTIONS FOR COUPLED PIPEFLOW AND STREETFLOW MODEL*
     HALF-  CROWN TO   STREET-CROSSFALL:   CURB  GUTTER-GEOMETRIES:  MANNING
     WIDTH  CROSSFALL  IN-  / OUT-/PARK-  HEIGHT  WIDTH  LIP   HIKE  FACTOR
NO.   (FT)     (FT)    SIDE / SIDE/ WAY    (FT)    (FT)  (FT)  (FT)    (n)
===   =====  =========  ================  ======  ===== ====== ===== =======
  1   30.0     20.0    0.018/0.018/0.020   0.67    2.00 0.0313 0.167 0.0150
```

```
  2   20.0     15.0    0.020/0.020/0.020   0.50    1.50 0.0100 0.125 0.0180
  3   11.0      6.0    0.020/0.018/0.020   0.50    1.50 0.0313 0.125 0.0130

  GLOBAL STREET FLOW-DEPTH CONSTRAINTS:
    1. Relative Flow-Depth = -0.10 FEET
       as (Maximum Allowable Street Flow Depth) - (Top-of-Curb)
    2. (Depth)*(Velocity) Constraint =  6.0 (FT*FT/S)
  *SIZE PIPE WITH A FLOW CAPACITY GREATER THAN
   OR EQUAL TO THE UPSTREAM TRIBUTARY PIPE.*

****************************************************************************
  FLOW PROCESS FROM NODE    200.00 TO NODE    201.00 IS CODE =  21
----------------------------------------------------------------------------
  >>>>>RATIONAL METHOD INITIAL SUBAREA ANALYSIS<<<<<
============================================================================
  *USER SPECIFIED(SUBAREA):
  INDUSTRIAL DEVELOPMENT RUNOFF COEFFICIENT = .9500
  S.C.S. CURVE NUMBER (AMC II) =   0
  INITIAL SUBAREA FLOW-LENGTH(FEET) =    85.00
  UPSTREAM ELEVATION(FEET) =    520.00
  DOWNSTREAM ELEVATION(FEET) =    519.50
  ELEVATION DIFFERENCE(FEET) =      0.50
  URBAN SUBAREA OVERLAND TIME OF FLOW(MIN.) =    2.971
  TIME OF CONCENTRATION ASSUMED AS 6-MIN.
   100 YEAR RAINFALL INTENSITY(INCH/HOUR) =  4.210
  SUBAREA RUNOFF(CFS) =      0.40
  TOTAL AREA(ACRES) =      0.10   TOTAL RUNOFF(CFS) =      0.40

****************************************************************************
  FLOW PROCESS FROM NODE    201.00 TO NODE    204.00 IS CODE =  62
----------------------------------------------------------------------------
  >>>>>COMPUTE STREET FLOW TRAVEL TIME THRU SUBAREA<<<<<
  >>>>>(STREET TABLE SECTION #  2 USED)<<<<<
============================================================================
  UPSTREAM ELEVATION(FEET) =  519.50  DOWNSTREAM ELEVATION(FEET) =  486.00
  STREET LENGTH(FEET) =   704.00   CURB HEIGHT(INCHES) =  6.0
  STREET HALFWIDTH(FEET) = 20.00

  DISTANCE FROM CROWN TO CROSSFALL GRADEBREAK(FEET) =  15.00
  INSIDE STREET CROSSFALL(DECIMAL) =  0.020
  OUTSIDE STREET CROSSFALL(DECIMAL)  =  0.020

  SPECIFIED NUMBER OF HALFSTREETS CARRYING RUNOFF =  1
  STREET PARKWAY CROSSFALL(DECIMAL)  =  0.020
  Manning's FRICTION FACTOR for Streetflow Section(curb-to-curb) =   0.0180
  Manning's FRICTION FACTOR for Back-of-Walk Flow Section =   0.0200

    **TRAVEL TIME COMPUTED USING ESTIMATED FLOW(CFS) =       2.27
    STREETFLOW MODEL RESULTS USING ESTIMATED FLOW:
    STREET FLOW DEPTH(FEET) =  0.26
```

```
    HALFSTREET FLOOD WIDTH(FEET) =    7.55
    AVERAGE FLOW VELOCITY(FEET/SEC.) =    3.47
    PRODUCT OF DEPTH&VELOCITY(FT*FT/SEC.) =    0.89
  STREET FLOW TRAVEL TIME(MIN.) =   3.38   Tc(MIN.) =   9.38
   100 YEAR RAINFALL INTENSITY(INCH/HOUR) =  3.567
  *USER SPECIFIED(SUBAREA):
  INDUSTRIAL DEVELOPMENT RUNOFF COEFFICIENT = .8700
  S.C.S. CURVE NUMBER (AMC II) =   0
  SUBAREA AREA(ACRES) =    1.20      SUBAREA RUNOFF(CFS) =    3.72
  TOTAL AREA(ACRES) =      1.30        PEAK FLOW RATE(CFS) =       4.12

  END OF SUBAREA STREET FLOW HYDRAULICS:
  DEPTH(FEET) = 0.30   HALFSTREET FLOOD WIDTH(FEET) =   9.78
  FLOW VELOCITY(FEET/SEC.) =  3.96   DEPTH*VELOCITY(FT*FT/SEC.) =   1.19
  LONGEST FLOWPATH FROM NODE    200.00 TO NODE    204.00 =   789.00 FEET.

****************************************************************************
  FLOW PROCESS FROM NODE    204.00 TO NODE    230.00 IS CODE =  41
----------------------------------------------------------------------------
  >>>>>COMPUTE PIPE-FLOW TRAVEL TIME THRU SUBAREA<<<<<
  >>>>>USING USER-SPECIFIED PIPESIZE (EXISTING ELEMENT)<<<<<
============================================================================
  ELEVATION DATA: UPSTREAM(FEET) =   483.00  DOWNSTREAM(FEET) =   481.00
  FLOW LENGTH(FEET) =   347.00   MANNING'S N =  0.013
  DEPTH OF FLOW IN  18.0 INCH PIPE IS   9.5 INCHES
  PIPE-FLOW VELOCITY(FEET/SEC.) =   4.38
  GIVEN PIPE DIAMETER(INCH) =  18.00    NUMBER OF PIPES =   1
  PIPE-FLOW(CFS) =      4.12
  PIPE TRAVEL TIME(MIN.) =   1.32    Tc(MIN.) =  10.70
  LONGEST FLOWPATH FROM NODE    200.00 TO NODE    230.00 =  1136.00 FEET.

****************************************************************************
  FLOW PROCESS FROM NODE    230.00 TO NODE    230.00 IS CODE =  10
----------------------------------------------------------------------------
  >>>>>MAIN-STREAM MEMORY COPIED ONTO MEMORY BANK # 1 <<<<<
============================================================================

****************************************************************************
  FLOW PROCESS FROM NODE    205.00 TO NODE    206.00 IS CODE =  21
----------------------------------------------------------------------------
  >>>>>RATIONAL METHOD INITIAL SUBAREA ANALYSIS<<<<<
============================================================================
  *USER SPECIFIED(SUBAREA):
  RURAL DEVELOPMENT RUNOFF COEFFICIENT = .4500
  S.C.S. CURVE NUMBER (AMC II) =   0
  INITIAL SUBAREA FLOW-LENGTH(FEET) =    65.00
  UPSTREAM ELEVATION(FEET) =    510.00
  DOWNSTREAM ELEVATION(FEET) =    509.00
  ELEVATION DIFFERENCE(FEET) =      1.00
  URBAN SUBAREA OVERLAND TIME OF FLOW(MIN.) =    8.171
```

```
   100 YEAR RAINFALL INTENSITY(INCH/HOUR) =  3.797
  SUBAREA RUNOFF(CFS) =      0.17
  TOTAL AREA(ACRES) =      0.10   TOTAL RUNOFF(CFS) =      0.17

****************************************************************************
  FLOW PROCESS FROM NODE    206.00 TO NODE    207.00 IS CODE =  51
----------------------------------------------------------------------------
  >>>>>COMPUTE TRAPEZOIDAL CHANNEL FLOW<<<<<
  >>>>>TRAVELTIME THRU SUBAREA (EXISTING ELEMENT)<<<<<
============================================================================
  ELEVATION DATA: UPSTREAM(FEET) =    509.00  DOWNSTREAM(FEET) =    496.00
  CHANNEL LENGTH THRU SUBAREA(FEET) =   123.00   CHANNEL SLOPE =  0.1057
  CHANNEL BASE(FEET) =   10.00   "Z" FACTOR =  12.000
  MANNING'S FACTOR = 0.030   MAXIMUM DEPTH(FEET) =   5.00
   100 YEAR RAINFALL INTENSITY(INCH/HOUR) =  3.521
  *USER SPECIFIED(SUBAREA):
  RURAL DEVELOPMENT RUNOFF COEFFICIENT = .4500
  S.C.S. CURVE NUMBER (AMC II) =   0
  TRAVEL TIME COMPUTED USING ESTIMATED FLOW(CFS) =      0.49
  TRAVEL TIME THRU SUBAREA BASED ON VELOCITY(FEET/SEC.) =   1.41
  AVERAGE FLOW DEPTH(FEET) =   0.03   TRAVEL TIME(MIN.) =   1.46
  Tc(MIN.) =   9.63
  SUBAREA AREA(ACRES) =     0.40       SUBAREA RUNOFF(CFS) =    0.63
  TOTAL AREA(ACRES) =      0.50         PEAK FLOW RATE(CFS) =       0.80

  END OF SUBAREA CHANNEL FLOW HYDRAULICS:
  DEPTH(FEET) =  0.04   FLOW VELOCITY(FEET/SEC.) =   1.87
  LONGEST FLOWPATH FROM NODE    205.00 TO NODE    207.00 =   188.00 FEET.

****************************************************************************
  FLOW PROCESS FROM NODE    207.00 TO NODE    209.00 IS CODE =  61
----------------------------------------------------------------------------
  >>>>>COMPUTE STREET FLOW TRAVEL TIME THRU SUBAREA<<<<<
  >>>>>(STANDARD CURB SECTION USED)<<<<<
============================================================================
  UPSTREAM ELEVATION(FEET) =  496.00  DOWNSTREAM ELEVATION(FEET) =  494.00
  STREET LENGTH(FEET) =   123.00   CURB HEIGHT(INCHES) =  6.0
  STREET HALFWIDTH(FEET) = 11.00

  DISTANCE FROM CROWN TO CROSSFALL GRADEBREAK(FEET) =   6.00
  INSIDE STREET CROSSFALL(DECIMAL) =  0.200
  OUTSIDE STREET CROSSFALL(DECIMAL)  =  0.200

  SPECIFIED NUMBER OF HALFSTREETS CARRYING RUNOFF =  1
  STREET PARKWAY CROSSFALL(DECIMAL)  =  0.020
  Manning's FRICTION FACTOR for Streetflow Section(curb-to-curb) =   0.0180
  Manning's FRICTION FACTOR for Back-of-Walk Flow Section =   0.0200

    **TRAVEL TIME COMPUTED USING ESTIMATED FLOW(CFS) =       0.97
    STREETFLOW MODEL RESULTS USING ESTIMATED FLOW:
```

```
    STREET FLOW DEPTH(FEET) =  0.27
    HALFSTREET FLOOD WIDTH(FEET) =    2.05
    AVERAGE FLOW VELOCITY(FEET/SEC.) =    2.88
    PRODUCT OF DEPTH&VELOCITY(FT*FT/SEC.) =    0.77
  STREET FLOW TRAVEL TIME(MIN.) =   0.71   Tc(MIN.) =  10.34
   100 YEAR RAINFALL INTENSITY(INCH/HOUR) =  3.413
  *USER SPECIFIED(SUBAREA):
  INDUSTRIAL DEVELOPMENT RUNOFF COEFFICIENT = .9500
  S.C.S. CURVE NUMBER (AMC II) =   0
  SUBAREA AREA(ACRES) =    0.10      SUBAREA RUNOFF(CFS) =    0.32
  TOTAL AREA(ACRES) =      0.60        PEAK FLOW RATE(CFS) =       1.13

  END OF SUBAREA STREET FLOW HYDRAULICS:
  DEPTH(FEET) = 0.29   HALFSTREET FLOOD WIDTH(FEET) =   2.15
  FLOW VELOCITY(FEET/SEC.) =  3.00   DEPTH*VELOCITY(FT*FT/SEC.) =   0.86
  LONGEST FLOWPATH FROM NODE    205.00 TO NODE    209.00 =   311.00 FEET.

****************************************************************************
  FLOW PROCESS FROM NODE    209.00 TO NODE    209.00 IS CODE =  81
----------------------------------------------------------------------------
  >>>>>ADDITION OF SUBAREA TO MAINLINE PEAK FLOW<<<<<
============================================================================
   100 YEAR RAINFALL INTENSITY(INCH/HOUR) =  3.413
  *USER SPECIFIED(SUBAREA):
  MULTI-UNITS DEVELOPMENT RUNOFF COEFFICIENT = .8000
  S.C.S. CURVE NUMBER (AMC II) =   0
  SUBAREA AREA(ACRES) =    0.10   SUBAREA RUNOFF(CFS) =    0.27
  TOTAL AREA(ACRES) =      0.70   TOTAL RUNOFF(CFS) =    1.40
  TC(MIN.) =  10.34

****************************************************************************
  FLOW PROCESS FROM NODE    209.00 TO NODE    209.00 IS CODE =  81
----------------------------------------------------------------------------
  >>>>>ADDITION OF SUBAREA TO MAINLINE PEAK FLOW<<<<<
============================================================================
   100 YEAR RAINFALL INTENSITY(INCH/HOUR) =  3.413
  *USER SPECIFIED(SUBAREA):
  MULTI-UNITS DEVELOPMENT RUNOFF COEFFICIENT = .8000
  S.C.S. CURVE NUMBER (AMC II) =   0
  SUBAREA AREA(ACRES) =    0.20   SUBAREA RUNOFF(CFS) =    0.55
  TOTAL AREA(ACRES) =      0.90   TOTAL RUNOFF(CFS) =    1.95
  TC(MIN.) =  10.34

****************************************************************************
  FLOW PROCESS FROM NODE    209.00 TO NODE    210.00 IS CODE =  41
----------------------------------------------------------------------------
  >>>>>COMPUTE PIPE-FLOW TRAVEL TIME THRU SUBAREA<<<<<
  >>>>>USING USER-SPECIFIED PIPESIZE (EXISTING ELEMENT)<<<<<
============================================================================
  ELEVATION DATA: UPSTREAM(FEET) =   491.00  DOWNSTREAM(FEET) =   490.50
```

```
  FLOW LENGTH(FEET) =    67.00   MANNING'S N =  0.013
  DEPTH OF FLOW IN  18.0 INCH PIPE IS   5.8 INCHES
  PIPE-FLOW VELOCITY(FEET/SEC.) =   3.94
  GIVEN PIPE DIAMETER(INCH) =  18.00    NUMBER OF PIPES =   1
  PIPE-FLOW(CFS) =      1.95
  PIPE TRAVEL TIME(MIN.) =   0.28    Tc(MIN.) =  10.62
  LONGEST FLOWPATH FROM NODE    205.00 TO NODE    210.00 =   378.00 FEET.

****************************************************************************
  FLOW PROCESS FROM NODE    210.00 TO NODE    210.00 IS CODE =  81
----------------------------------------------------------------------------
  >>>>>ADDITION OF SUBAREA TO MAINLINE PEAK FLOW<<<<<
============================================================================
   100 YEAR RAINFALL INTENSITY(INCH/HOUR) =  3.381
  *USER SPECIFIED(SUBAREA):
  MULTI-UNITS DEVELOPMENT RUNOFF COEFFICIENT = .8500
  S.C.S. CURVE NUMBER (AMC II) =   0
  SUBAREA AREA(ACRES) =    0.50   SUBAREA RUNOFF(CFS) =    1.44
  TOTAL AREA(ACRES) =      1.40   TOTAL RUNOFF(CFS) =    3.39
  TC(MIN.) =  10.62

****************************************************************************
  FLOW PROCESS FROM NODE    210.00 TO NODE    212.00 IS CODE =  41
----------------------------------------------------------------------------
  >>>>>COMPUTE PIPE-FLOW TRAVEL TIME THRU SUBAREA<<<<<
  >>>>>USING USER-SPECIFIED PIPESIZE (EXISTING ELEMENT)<<<<<
============================================================================
  ELEVATION DATA: UPSTREAM(FEET) =   490.50  DOWNSTREAM(FEET) =   490.00
  FLOW LENGTH(FEET) =   175.00   MANNING'S N =  0.013
  DEPTH OF FLOW IN  18.0 INCH PIPE IS  10.4 INCHES
  PIPE-FLOW VELOCITY(FEET/SEC.) =   3.19
  GIVEN PIPE DIAMETER(INCH) =  18.00    NUMBER OF PIPES =   1
  PIPE-FLOW(CFS) =      3.39
  PIPE TRAVEL TIME(MIN.) =   0.91    Tc(MIN.) =  11.54
  LONGEST FLOWPATH FROM NODE    205.00 TO NODE    212.00 =   553.00 FEET.

****************************************************************************
  FLOW PROCESS FROM NODE    212.00 TO NODE    212.00 IS CODE =  81
----------------------------------------------------------------------------
  >>>>>ADDITION OF SUBAREA TO MAINLINE PEAK FLOW<<<<<
============================================================================
   100 YEAR RAINFALL INTENSITY(INCH/HOUR) =  3.281
  *USER SPECIFIED(SUBAREA):
  MULTI-UNITS DEVELOPMENT RUNOFF COEFFICIENT = .8400
  S.C.S. CURVE NUMBER (AMC II) =   0
  SUBAREA AREA(ACRES) =    0.40   SUBAREA RUNOFF(CFS) =    1.10
  TOTAL AREA(ACRES) =      1.80   TOTAL RUNOFF(CFS) =    4.49
  TC(MIN.) =  11.54

****************************************************************************
```

```
  FLOW PROCESS FROM NODE    212.00 TO NODE    215.00 IS CODE =  41
----------------------------------------------------------------------------
  >>>>>COMPUTE PIPE-FLOW TRAVEL TIME THRU SUBAREA<<<<<
  >>>>>USING USER-SPECIFIED PIPESIZE (EXISTING ELEMENT)<<<<<
============================================================================
  ELEVATION DATA: UPSTREAM(FEET) =   490.00  DOWNSTREAM(FEET) =   489.50
  FLOW LENGTH(FEET) =    23.00   MANNING'S N =  0.013
  DEPTH OF FLOW IN  18.0 INCH PIPE IS   6.8 INCHES
  PIPE-FLOW VELOCITY(FEET/SEC.) =   7.32
  GIVEN PIPE DIAMETER(INCH) =  18.00    NUMBER OF PIPES =   1
  PIPE-FLOW(CFS) =      4.49
  PIPE TRAVEL TIME(MIN.) =   0.05    Tc(MIN.) =  11.59
  LONGEST FLOWPATH FROM NODE    205.00 TO NODE    215.00 =   576.00 FEET.

****************************************************************************
  FLOW PROCESS FROM NODE    215.00 TO NODE    215.00 IS CODE =  81
----------------------------------------------------------------------------
  >>>>>ADDITION OF SUBAREA TO MAINLINE PEAK FLOW<<<<<
============================================================================
   100 YEAR RAINFALL INTENSITY(INCH/HOUR) =  3.275
  *USER SPECIFIED(SUBAREA):
  MULTI-UNITS DEVELOPMENT RUNOFF COEFFICIENT = .8500
  S.C.S. CURVE NUMBER (AMC II) =   0
  SUBAREA AREA(ACRES) =    0.30   SUBAREA RUNOFF(CFS) =    0.84
  TOTAL AREA(ACRES) =      2.10   TOTAL RUNOFF(CFS) =    5.32
  TC(MIN.) =  11.59

****************************************************************************
  FLOW PROCESS FROM NODE    215.00 TO NODE    215.00 IS CODE =  81
----------------------------------------------------------------------------
  >>>>>ADDITION OF SUBAREA TO MAINLINE PEAK FLOW<<<<<
============================================================================
   100 YEAR RAINFALL INTENSITY(INCH/HOUR) =  3.275
  *USER SPECIFIED(SUBAREA):
  INDUSTRIAL DEVELOPMENT RUNOFF COEFFICIENT = .9500
  S.C.S. CURVE NUMBER (AMC II) =   0
  SUBAREA AREA(ACRES) =    0.10   SUBAREA RUNOFF(CFS) =    0.31
  TOTAL AREA(ACRES) =      2.20   TOTAL RUNOFF(CFS) =    5.63
  TC(MIN.) =  11.59

****************************************************************************
  FLOW PROCESS FROM NODE    215.00 TO NODE    217.00 IS CODE =  41
----------------------------------------------------------------------------
  >>>>>COMPUTE PIPE-FLOW TRAVEL TIME THRU SUBAREA<<<<<
  >>>>>USING USER-SPECIFIED PIPESIZE (EXISTING ELEMENT)<<<<<
============================================================================
  ELEVATION DATA: UPSTREAM(FEET) =   489.50  DOWNSTREAM(FEET) =   488.00
  FLOW LENGTH(FEET) =   159.00   MANNING'S N =  0.013
  DEPTH OF FLOW IN  24.0 INCH PIPE IS   8.5 INCHES
  PIPE-FLOW VELOCITY(FEET/SEC.) =   5.64
```

```
  GIVEN PIPE DIAMETER(INCH) =  24.00    NUMBER OF PIPES =   1
  PIPE-FLOW(CFS) =      5.63
  PIPE TRAVEL TIME(MIN.) =   0.47    Tc(MIN.) =  12.06
  LONGEST FLOWPATH FROM NODE    205.00 TO NODE    217.00 =   735.00 FEET.

****************************************************************************
  FLOW PROCESS FROM NODE    217.00 TO NODE    217.00 IS CODE =  81
----------------------------------------------------------------------------
  >>>>>ADDITION OF SUBAREA TO MAINLINE PEAK FLOW<<<<<
============================================================================
   100 YEAR RAINFALL INTENSITY(INCH/HOUR) =  3.224
  *USER SPECIFIED(SUBAREA):
  MULTI-UNITS DEVELOPMENT RUNOFF COEFFICIENT = .8600
  S.C.S. CURVE NUMBER (AMC II) =   0
  SUBAREA AREA(ACRES) =    0.80   SUBAREA RUNOFF(CFS) =    2.22
  TOTAL AREA(ACRES) =      3.00   TOTAL RUNOFF(CFS) =    7.85
  TC(MIN.) =  12.06

****************************************************************************
  FLOW PROCESS FROM NODE    217.00 TO NODE    228.00 IS CODE =  41
----------------------------------------------------------------------------
  >>>>>COMPUTE PIPE-FLOW TRAVEL TIME THRU SUBAREA<<<<<
  >>>>>USING USER-SPECIFIED PIPESIZE (EXISTING ELEMENT)<<<<<
============================================================================
  ELEVATION DATA: UPSTREAM(FEET) =   488.00  DOWNSTREAM(FEET) =   487.00
  FLOW LENGTH(FEET) =    40.00   MANNING'S N =  0.013
  DEPTH OF FLOW IN  24.0 INCH PIPE IS   7.8 INCHES
  PIPE-FLOW VELOCITY(FEET/SEC.) =   8.80
  GIVEN PIPE DIAMETER(INCH) =  24.00    NUMBER OF PIPES =   1
  PIPE-FLOW(CFS) =      7.85
  PIPE TRAVEL TIME(MIN.) =   0.08    Tc(MIN.) =  12.13
  LONGEST FLOWPATH FROM NODE    205.00 TO NODE    228.00 =   775.00 FEET.

****************************************************************************
  FLOW PROCESS FROM NODE    228.00 TO NODE    228.00 IS CODE =   1
----------------------------------------------------------------------------
  >>>>>DESIGNATE INDEPENDENT STREAM FOR CONFLUENCE<<<<<
============================================================================
  TOTAL NUMBER OF STREAMS =  2
  CONFLUENCE VALUES USED FOR INDEPENDENT STREAM  1 ARE:
  TIME OF CONCENTRATION(MIN.) =  12.13
  RAINFALL INTENSITY(INCH/HR) =   3.22
  TOTAL STREAM AREA(ACRES) =     3.00
  PEAK FLOW RATE(CFS) AT CONFLUENCE =      7.85

****************************************************************************
  FLOW PROCESS FROM NODE    220.00 TO NODE    222.00 IS CODE =  21
----------------------------------------------------------------------------
  >>>>>RATIONAL METHOD INITIAL SUBAREA ANALYSIS<<<<<
============================================================================
```

```
  *USER SPECIFIED(SUBAREA):
  MULTI-UNITS DEVELOPMENT RUNOFF COEFFICIENT = .8000
  S.C.S. CURVE NUMBER (AMC II) =   0
  INITIAL SUBAREA FLOW-LENGTH(FEET) =    84.00
  UPSTREAM ELEVATION(FEET) =    498.00
  DOWNSTREAM ELEVATION(FEET) =    497.00
  ELEVATION DIFFERENCE(FEET) =      1.00
  URBAN SUBAREA OVERLAND TIME OF FLOW(MIN.) =    4.670
  TIME OF CONCENTRATION ASSUMED AS 6-MIN.
   100 YEAR RAINFALL INTENSITY(INCH/HOUR) =  4.210
  SUBAREA RUNOFF(CFS) =      0.34
  TOTAL AREA(ACRES) =      0.10   TOTAL RUNOFF(CFS) =      0.34

****************************************************************************
  FLOW PROCESS FROM NODE    222.00 TO NODE    223.00 IS CODE =  62
----------------------------------------------------------------------------
  >>>>>COMPUTE STREET FLOW TRAVEL TIME THRU SUBAREA<<<<<
  >>>>>(STREET TABLE SECTION #  3 USED)<<<<<
============================================================================
  UPSTREAM ELEVATION(FEET) =  497.00  DOWNSTREAM ELEVATION(FEET) =  496.00
  STREET LENGTH(FEET) =    99.00   CURB HEIGHT(INCHES) =  6.0
  STREET HALFWIDTH(FEET) = 11.00

  DISTANCE FROM CROWN TO CROSSFALL GRADEBREAK(FEET) =   6.00
  INSIDE STREET CROSSFALL(DECIMAL) =  0.020
  OUTSIDE STREET CROSSFALL(DECIMAL)  =  0.018

  SPECIFIED NUMBER OF HALFSTREETS CARRYING RUNOFF =  1
  STREET PARKWAY CROSSFALL(DECIMAL)  =  0.020
  Manning's FRICTION FACTOR for Streetflow Section(curb-to-curb) =   0.0130
  Manning's FRICTION FACTOR for Back-of-Walk Flow Section =   0.0130

    **TRAVEL TIME COMPUTED USING ESTIMATED FLOW(CFS) =       0.51
    STREETFLOW MODEL RESULTS USING ESTIMATED FLOW:
    STREET FLOW DEPTH(FEET) =  0.21
    HALFSTREET FLOOD WIDTH(FEET) =    4.29
    AVERAGE FLOW VELOCITY(FEET/SEC.) =    1.80
    PRODUCT OF DEPTH&VELOCITY(FT*FT/SEC.) =    0.37
  STREET FLOW TRAVEL TIME(MIN.) =   0.92   Tc(MIN.) =   6.92
   100 YEAR RAINFALL INTENSITY(INCH/HOUR) =  4.036
  *USER SPECIFIED(SUBAREA):
  INDUSTRIAL DEVELOPMENT RUNOFF COEFFICIENT = .8800
  S.C.S. CURVE NUMBER (AMC II) =   0
  SUBAREA AREA(ACRES) =    0.10      SUBAREA RUNOFF(CFS) =    0.36
  TOTAL AREA(ACRES) =      0.20        PEAK FLOW RATE(CFS) =       0.69

  END OF SUBAREA STREET FLOW HYDRAULICS:
  DEPTH(FEET) = 0.22   HALFSTREET FLOOD WIDTH(FEET) =   5.23
  FLOW VELOCITY(FEET/SEC.) =  1.87   DEPTH*VELOCITY(FT*FT/SEC.) =   0.42
  LONGEST FLOWPATH FROM NODE    220.00 TO NODE    223.00 =   183.00 FEET.
```

```
****************************************************************************
  FLOW PROCESS FROM NODE    223.00 TO NODE    223.00 IS CODE =  81
----------------------------------------------------------------------------
  >>>>>ADDITION OF SUBAREA TO MAINLINE PEAK FLOW<<<<<
============================================================================
   100 YEAR RAINFALL INTENSITY(INCH/HOUR) =  4.036
  *USER SPECIFIED(SUBAREA):
  MULTI-UNITS DEVELOPMENT RUNOFF COEFFICIENT = .8000
  S.C.S. CURVE NUMBER (AMC II) =   0
  SUBAREA AREA(ACRES) =    0.10   SUBAREA RUNOFF(CFS) =    0.32
  TOTAL AREA(ACRES) =      0.30   TOTAL RUNOFF(CFS) =    1.01
  TC(MIN.) =   6.92

****************************************************************************
  FLOW PROCESS FROM NODE    223.00 TO NODE    225.00 IS CODE =  41
----------------------------------------------------------------------------
  >>>>>COMPUTE PIPE-FLOW TRAVEL TIME THRU SUBAREA<<<<<
  >>>>>USING USER-SPECIFIED PIPESIZE (EXISTING ELEMENT)<<<<<
============================================================================
  ELEVATION DATA: UPSTREAM(FEET) =   492.00  DOWNSTREAM(FEET) =   490.00
  FLOW LENGTH(FEET) =   205.00   MANNING'S N =  0.013
  DEPTH OF FLOW IN  18.0 INCH PIPE IS   3.9 INCHES
  PIPE-FLOW VELOCITY(FEET/SEC.) =   3.60
  GIVEN PIPE DIAMETER(INCH) =  18.00    NUMBER OF PIPES =   1
  PIPE-FLOW(CFS) =      1.01
  PIPE TRAVEL TIME(MIN.) =   0.95    Tc(MIN.) =   7.87
  LONGEST FLOWPATH FROM NODE    220.00 TO NODE    225.00 =   388.00 FEET.

****************************************************************************
  FLOW PROCESS FROM NODE    225.00 TO NODE    225.00 IS CODE =  81
----------------------------------------------------------------------------
  >>>>>ADDITION OF SUBAREA TO MAINLINE PEAK FLOW<<<<<
============================================================================
   100 YEAR RAINFALL INTENSITY(INCH/HOUR) =  3.855
  *USER SPECIFIED(SUBAREA):
  MULTI-UNITS DEVELOPMENT RUNOFF COEFFICIENT = .8400
  S.C.S. CURVE NUMBER (AMC II) =   0
  SUBAREA AREA(ACRES) =    0.40   SUBAREA RUNOFF(CFS) =    1.30
  TOTAL AREA(ACRES) =      0.70   TOTAL RUNOFF(CFS) =    2.31
  TC(MIN.) =   7.87

****************************************************************************
  FLOW PROCESS FROM NODE    225.00 TO NODE    227.00 IS CODE =  41
----------------------------------------------------------------------------
  >>>>>COMPUTE PIPE-FLOW TRAVEL TIME THRU SUBAREA<<<<<
  >>>>>USING USER-SPECIFIED PIPESIZE (EXISTING ELEMENT)<<<<<
============================================================================
  ELEVATION DATA: UPSTREAM(FEET) =   490.00  DOWNSTREAM(FEET) =   488.00
  FLOW LENGTH(FEET) =   200.00   MANNING'S N =  0.013
```

```
  DEPTH OF FLOW IN  18.0 INCH PIPE IS   5.9 INCHES
  PIPE-FLOW VELOCITY(FEET/SEC.) =   4.59
  GIVEN PIPE DIAMETER(INCH) =  18.00    NUMBER OF PIPES =   1
  PIPE-FLOW(CFS) =      2.31
  PIPE TRAVEL TIME(MIN.) =   0.73    Tc(MIN.) =   8.59
  LONGEST FLOWPATH FROM NODE    220.00 TO NODE    227.00 =   588.00 FEET.

****************************************************************************
  FLOW PROCESS FROM NODE    227.00 TO NODE    227.00 IS CODE =  81
----------------------------------------------------------------------------
  >>>>>ADDITION OF SUBAREA TO MAINLINE PEAK FLOW<<<<<
============================================================================
   100 YEAR RAINFALL INTENSITY(INCH/HOUR) =  3.717
  *USER SPECIFIED(SUBAREA):
  MULTI-UNITS DEVELOPMENT RUNOFF COEFFICIENT = .8500
  S.C.S. CURVE NUMBER (AMC II) =   0
  SUBAREA AREA(ACRES) =    0.60   SUBAREA RUNOFF(CFS) =    1.90
  TOTAL AREA(ACRES) =      1.30   TOTAL RUNOFF(CFS) =    4.21
  TC(MIN.) =   8.59

****************************************************************************
  FLOW PROCESS FROM NODE    227.00 TO NODE    228.00 IS CODE =  41
----------------------------------------------------------------------------
  >>>>>COMPUTE PIPE-FLOW TRAVEL TIME THRU SUBAREA<<<<<
  >>>>>USING USER-SPECIFIED PIPESIZE (EXISTING ELEMENT)<<<<<
============================================================================
  ELEVATION DATA: UPSTREAM(FEET) =   488.00  DOWNSTREAM(FEET) =   487.00
  FLOW LENGTH(FEET) =   170.00   MANNING'S N =  0.013
  DEPTH OF FLOW IN  18.0 INCH PIPE IS   9.5 INCHES
  PIPE-FLOW VELOCITY(FEET/SEC.) =   4.44
  GIVEN PIPE DIAMETER(INCH) =  18.00    NUMBER OF PIPES =   1
  PIPE-FLOW(CFS) =      4.21
  PIPE TRAVEL TIME(MIN.) =   0.64    Tc(MIN.) =   9.23
  LONGEST FLOWPATH FROM NODE    220.00 TO NODE    228.00 =   758.00 FEET.

****************************************************************************
  FLOW PROCESS FROM NODE    228.00 TO NODE    228.00 IS CODE =   1
----------------------------------------------------------------------------
  >>>>>DESIGNATE INDEPENDENT STREAM FOR CONFLUENCE<<<<<
  >>>>>AND COMPUTE VARIOUS CONFLUENCED STREAM VALUES<<<<<
============================================================================
  TOTAL NUMBER OF STREAMS =  2
  CONFLUENCE VALUES USED FOR INDEPENDENT STREAM  2 ARE:
  TIME OF CONCENTRATION(MIN.) =   9.23
  RAINFALL INTENSITY(INCH/HR) =   3.60
  TOTAL STREAM AREA(ACRES) =     1.30
  PEAK FLOW RATE(CFS) AT CONFLUENCE =      4.21

  ** CONFLUENCE DATA **
  STREAM     RUNOFF      Tc      INTENSITY      AREA
```

```
  NUMBER      (CFS)    (MIN.)   (INCH/HOUR)    (ACRE)
      1        7.85    12.13        3.215          3.00
      2        4.21     9.23        3.596          1.30

  RAINFALL INTENSITY AND TIME OF CONCENTRATION RATIO
  CONFLUENCE FORMULA USED FOR  2 STREAMS.

  ** PEAK FLOW RATE TABLE **
  STREAM     RUNOFF      Tc      INTENSITY
  NUMBER      (CFS)    (MIN.)   (INCH/HOUR)
      1       11.23     9.23       3.596
      2       11.61    12.13       3.215

  COMPUTED CONFLUENCE ESTIMATES ARE AS FOLLOWS:
  PEAK FLOW RATE(CFS) =     11.61   Tc(MIN.) =   12.13
  TOTAL AREA(ACRES) =      4.30
  LONGEST FLOWPATH FROM NODE    205.00 TO NODE    228.00 =   775.00 FEET.

****************************************************************************
  FLOW PROCESS FROM NODE    228.00 TO NODE    229.00 IS CODE =  41
----------------------------------------------------------------------------
  >>>>>COMPUTE PIPE-FLOW TRAVEL TIME THRU SUBAREA<<<<<
  >>>>>USING USER-SPECIFIED PIPESIZE (EXISTING ELEMENT)<<<<<
============================================================================
  ELEVATION DATA: UPSTREAM(FEET) =   487.00  DOWNSTREAM(FEET) =   485.00
  FLOW LENGTH(FEET) =    63.00   MANNING'S N =  0.013
  DEPTH OF FLOW IN  24.0 INCH PIPE IS   9.1 INCHES
  PIPE-FLOW VELOCITY(FEET/SEC.) =  10.69
  GIVEN PIPE DIAMETER(INCH) =  24.00    NUMBER OF PIPES =   1
  PIPE-FLOW(CFS) =     11.61
  PIPE TRAVEL TIME(MIN.) =   0.10    Tc(MIN.) =  12.23
  LONGEST FLOWPATH FROM NODE    205.00 TO NODE    229.00 =   838.00 FEET.

****************************************************************************
  FLOW PROCESS FROM NODE    229.00 TO NODE    229.00 IS CODE =  81
----------------------------------------------------------------------------
  >>>>>ADDITION OF SUBAREA TO MAINLINE PEAK FLOW<<<<<
============================================================================
   100 YEAR RAINFALL INTENSITY(INCH/HOUR) =  3.204
  *USER SPECIFIED(SUBAREA):
  INDUSTRIAL DEVELOPMENT RUNOFF COEFFICIENT = .9500
  S.C.S. CURVE NUMBER (AMC II) =   0
  SUBAREA AREA(ACRES) =    0.10   SUBAREA RUNOFF(CFS) =    0.30
  TOTAL AREA(ACRES) =      4.40   TOTAL RUNOFF(CFS) =   11.92
  TC(MIN.) =  12.23

****************************************************************************
  FLOW PROCESS FROM NODE    229.00 TO NODE    229.00 IS CODE =  81
----------------------------------------------------------------------------
  >>>>>ADDITION OF SUBAREA TO MAINLINE PEAK FLOW<<<<<
```

```
============================================================================
   100 YEAR RAINFALL INTENSITY(INCH/HOUR) =  3.204
  *USER SPECIFIED(SUBAREA):
  INDUSTRIAL DEVELOPMENT RUNOFF COEFFICIENT = .9500
  S.C.S. CURVE NUMBER (AMC II) =   0
  SUBAREA AREA(ACRES) =    0.40   SUBAREA RUNOFF(CFS) =    1.22
  TOTAL AREA(ACRES) =      4.80   TOTAL RUNOFF(CFS) =   13.13
  TC(MIN.) =  12.23

****************************************************************************
  FLOW PROCESS FROM NODE    229.00 TO NODE    230.00 IS CODE =  41
----------------------------------------------------------------------------
  >>>>>COMPUTE PIPE-FLOW TRAVEL TIME THRU SUBAREA<<<<<
  >>>>>USING USER-SPECIFIED PIPESIZE (EXISTING ELEMENT)<<<<<
============================================================================
  ELEVATION DATA: UPSTREAM(FEET) =   485.00  DOWNSTREAM(FEET) =   481.00
  FLOW LENGTH(FEET) =    83.00   MANNING'S N =  0.013
  DEPTH OF FLOW IN  24.0 INCH PIPE IS   8.7 INCHES
  PIPE-FLOW VELOCITY(FEET/SEC.) =  12.87
  GIVEN PIPE DIAMETER(INCH) =  24.00    NUMBER OF PIPES =   1
  PIPE-FLOW(CFS) =     13.13
  PIPE TRAVEL TIME(MIN.) =   0.11    Tc(MIN.) =  12.34
  LONGEST FLOWPATH FROM NODE    205.00 TO NODE    230.00 =   921.00 FEET.

****************************************************************************
  FLOW PROCESS FROM NODE    230.00 TO NODE    230.00 IS CODE =  11
----------------------------------------------------------------------------
  >>>>>CONFLUENCE MEMORY BANK # 1 WITH THE MAIN-STREAM MEMORY<<<<<
============================================================================

  ** MAIN STREAM CONFLUENCE DATA **
  STREAM     RUNOFF     Tc      INTENSITY     AREA
  NUMBER      (CFS)   (MIN.)   (INCH/HOUR)   (ACRE)
      1       13.13    12.34       3.193        4.80
  LONGEST FLOWPATH FROM NODE    205.00 TO NODE    230.00 =   921.00 FEET.

  ** MEMORY BANK #  1 CONFLUENCE DATA **
  STREAM     RUNOFF     Tc      INTENSITY     AREA
  NUMBER      (CFS)   (MIN.)   (INCH/HOUR)   (ACRE)
      1        4.12    10.70       3.373        1.30
  LONGEST FLOWPATH FROM NODE    200.00 TO NODE    230.00 =  1136.00 FEET.

  ** PEAK FLOW RATE TABLE **
  STREAM    RUNOFF       Tc      INTENSITY
  NUMBER     (CFS)     (MIN.)   (INCH/HOUR)
      1      16.56      10.70        3.373
      2      17.04      12.34        3.193

  COMPUTED CONFLUENCE ESTIMATES ARE AS FOLLOWS:
  PEAK FLOW RATE(CFS) =     17.04   Tc(MIN.) =   12.34
```

```
  TOTAL AREA(ACRES) =      6.10

****************************************************************************
  FLOW PROCESS FROM NODE    230.00 TO NODE    230.00 IS CODE =  12
----------------------------------------------------------------------------
  >>>>>CLEAR MEMORY BANK # 1 <<<<<
============================================================================

****************************************************************************
  FLOW PROCESS FROM NODE    230.00 TO NODE    235.00 IS CODE =  41
----------------------------------------------------------------------------
  >>>>>COMPUTE PIPE-FLOW TRAVEL TIME THRU SUBAREA<<<<<
  >>>>>USING USER-SPECIFIED PIPESIZE (EXISTING ELEMENT)<<<<<
============================================================================
  ELEVATION DATA: UPSTREAM(FEET) =   481.00  DOWNSTREAM(FEET) =   478.50
  FLOW LENGTH(FEET) =   480.00   MANNING'S N =  0.013
  ASSUME FULL-FLOWING PIPELINE
  PIPE-FLOW VELOCITY(FEET/SEC.) =   5.42
  PIPE FLOW VELOCITY = (TOTAL FLOW)/(PIPE CROSS SECTION AREA)
  GIVEN PIPE DIAMETER(INCH) =  24.00    NUMBER OF PIPES =   1
  PIPE-FLOW(CFS) =     17.04
  PIPE TRAVEL TIME(MIN.) =   1.48    Tc(MIN.) =  13.82
  LONGEST FLOWPATH FROM NODE    200.00 TO NODE    235.00 =  1616.00 FEET.

****************************************************************************
  FLOW PROCESS FROM NODE    235.00 TO NODE    235.00 IS CODE =  81
----------------------------------------------------------------------------
  >>>>>ADDITION OF SUBAREA TO MAINLINE PEAK FLOW<<<<<
============================================================================
   100 YEAR RAINFALL INTENSITY(INCH/HOUR) =  3.030
  *USER SPECIFIED(SUBAREA):
  INDUSTRIAL DEVELOPMENT RUNOFF COEFFICIENT = .9500
  S.C.S. CURVE NUMBER (AMC II) =   0
  SUBAREA AREA(ACRES) =    0.60   SUBAREA RUNOFF(CFS) =    1.73
  TOTAL AREA(ACRES) =      6.70   TOTAL RUNOFF(CFS) =   18.77
  TC(MIN.) =  13.82

****************************************************************************
  FLOW PROCESS FROM NODE    235.00 TO NODE    235.00 IS CODE =  81
----------------------------------------------------------------------------
  >>>>>ADDITION OF SUBAREA TO MAINLINE PEAK FLOW<<<<<
============================================================================
   100 YEAR RAINFALL INTENSITY(INCH/HOUR) =  3.030
  *USER SPECIFIED(SUBAREA):
  INDUSTRIAL DEVELOPMENT RUNOFF COEFFICIENT = .9500
  S.C.S. CURVE NUMBER (AMC II) =   0
  SUBAREA AREA(ACRES) =    0.90   SUBAREA RUNOFF(CFS) =    2.59
  TOTAL AREA(ACRES) =      7.60   TOTAL RUNOFF(CFS) =   21.36
  TC(MIN.) =  13.82
```

```
****************************************************************************
  FLOW PROCESS FROM NODE    235.00 TO NODE    268.00 IS CODE =  41
----------------------------------------------------------------------------
  >>>>>COMPUTE PIPE-FLOW TRAVEL TIME THRU SUBAREA<<<<<
  >>>>>USING USER-SPECIFIED PIPESIZE (EXISTING ELEMENT)<<<<<
============================================================================
  ELEVATION DATA: UPSTREAM(FEET) =   478.50  DOWNSTREAM(FEET) =   478.00
  FLOW LENGTH(FEET) =    35.00   MANNING'S N =  0.013
  DEPTH OF FLOW IN  24.0 INCH PIPE IS  16.7 INCHES
  PIPE-FLOW VELOCITY(FEET/SEC.) =   9.14
  GIVEN PIPE DIAMETER(INCH) =  24.00    NUMBER OF PIPES =   1
  PIPE-FLOW(CFS) =     21.36
  PIPE TRAVEL TIME(MIN.) =   0.06    Tc(MIN.) =  13.88
  LONGEST FLOWPATH FROM NODE    200.00 TO NODE    268.00 =  1651.00 FEET.

****************************************************************************
  FLOW PROCESS FROM NODE    268.00 TO NODE    268.00 IS CODE =  10
----------------------------------------------------------------------------
  >>>>>MAIN-STREAM MEMORY COPIED ONTO MEMORY BANK # 1 <<<<<
============================================================================

****************************************************************************
  FLOW PROCESS FROM NODE    240.00 TO NODE    241.00 IS CODE =  21
----------------------------------------------------------------------------
  >>>>>RATIONAL METHOD INITIAL SUBAREA ANALYSIS<<<<<
============================================================================
  *USER SPECIFIED(SUBAREA):
  INDUSTRIAL DEVELOPMENT RUNOFF COEFFICIENT = .7000
  S.C.S. CURVE NUMBER (AMC II) =   0
  INITIAL SUBAREA FLOW-LENGTH(FEET) =    73.00
  UPSTREAM ELEVATION(FEET) =    494.00
  DOWNSTREAM ELEVATION(FEET) =    493.00
  ELEVATION DIFFERENCE(FEET) =      1.00
  URBAN SUBAREA OVERLAND TIME OF FLOW(MIN.) =    5.539
  TIME OF CONCENTRATION ASSUMED AS 6-MIN.
   100 YEAR RAINFALL INTENSITY(INCH/HOUR) =  4.210
  SUBAREA RUNOFF(CFS) =      0.29
  TOTAL AREA(ACRES) =      0.10   TOTAL RUNOFF(CFS) =      0.29

****************************************************************************
  FLOW PROCESS FROM NODE    241.00 TO NODE    242.00 IS CODE =  51
----------------------------------------------------------------------------
  >>>>>COMPUTE TRAPEZOIDAL CHANNEL FLOW<<<<<
  >>>>>TRAVELTIME THRU SUBAREA (EXISTING ELEMENT)<<<<<
============================================================================
  ELEVATION DATA: UPSTREAM(FEET) =    494.00  DOWNSTREAM(FEET) =    490.00
  CHANNEL LENGTH THRU SUBAREA(FEET) =    90.00   CHANNEL SLOPE =  0.0444
  CHANNEL BASE(FEET) =   10.00   "Z" FACTOR =  12.000
  MANNING'S FACTOR = 0.030   MAXIMUM DEPTH(FEET) =   5.00
   100 YEAR RAINFALL INTENSITY(INCH/HOUR) =  3.968
```

```
  *USER SPECIFIED(SUBAREA):
  RURAL DEVELOPMENT RUNOFF COEFFICIENT = .7000
  S.C.S. CURVE NUMBER (AMC II) =   0
  TRAVEL TIME COMPUTED USING ESTIMATED FLOW(CFS) =      0.43
  TRAVEL TIME THRU SUBAREA BASED ON VELOCITY(FEET/SEC.) =   1.18
  AVERAGE FLOW DEPTH(FEET) =   0.04   TRAVEL TIME(MIN.) =   1.27
  Tc(MIN.) =   7.27
  SUBAREA AREA(ACRES) =     0.10       SUBAREA RUNOFF(CFS) =    0.28
  TOTAL AREA(ACRES) =      0.20         PEAK FLOW RATE(CFS) =       0.57

  END OF SUBAREA CHANNEL FLOW HYDRAULICS:
  DEPTH(FEET) =  0.04   FLOW VELOCITY(FEET/SEC.) =   1.27
  LONGEST FLOWPATH FROM NODE    240.00 TO NODE    242.00 =   163.00 FEET.

****************************************************************************
  FLOW PROCESS FROM NODE    242.00 TO NODE    247.00 IS CODE =  62
----------------------------------------------------------------------------
  >>>>>COMPUTE STREET FLOW TRAVEL TIME THRU SUBAREA<<<<<
  >>>>>(STREET TABLE SECTION #  2 USED)<<<<<
============================================================================
  UPSTREAM ELEVATION(FEET) =  493.00  DOWNSTREAM ELEVATION(FEET) =  492.00
  STREET LENGTH(FEET) =    84.00   CURB HEIGHT(INCHES) =  6.0
  STREET HALFWIDTH(FEET) = 20.00

  DISTANCE FROM CROWN TO CROSSFALL GRADEBREAK(FEET) =  15.00
  INSIDE STREET CROSSFALL(DECIMAL) =  0.020
  OUTSIDE STREET CROSSFALL(DECIMAL)  =  0.020

  SPECIFIED NUMBER OF HALFSTREETS CARRYING RUNOFF =  1
  STREET PARKWAY CROSSFALL(DECIMAL)  =  0.020
  Manning's FRICTION FACTOR for Streetflow Section(curb-to-curb) =   0.0180
  Manning's FRICTION FACTOR for Back-of-Walk Flow Section =   0.0200

    **TRAVEL TIME COMPUTED USING ESTIMATED FLOW(CFS) =       0.74
    STREETFLOW MODEL RESULTS USING ESTIMATED FLOW:
    STREET FLOW DEPTH(FEET) =  0.23
    HALFSTREET FLOOD WIDTH(FEET) =    6.20
    AVERAGE FLOW VELOCITY(FEET/SEC.) =    1.58
    PRODUCT OF DEPTH&VELOCITY(FT*FT/SEC.) =    0.36
  STREET FLOW TRAVEL TIME(MIN.) =   0.89   Tc(MIN.) =   8.16
   100 YEAR RAINFALL INTENSITY(INCH/HOUR) =  3.800
  *USER SPECIFIED(SUBAREA):
  MULTI-UNITS DEVELOPMENT RUNOFF COEFFICIENT = .9000
  S.C.S. CURVE NUMBER (AMC II) =   0
  SUBAREA AREA(ACRES) =    0.10      SUBAREA RUNOFF(CFS) =    0.34
  TOTAL AREA(ACRES) =      0.30        PEAK FLOW RATE(CFS) =       0.91

  END OF SUBAREA STREET FLOW HYDRAULICS:
  DEPTH(FEET) = 0.24   HALFSTREET FLOOD WIDTH(FEET) =   6.85
  FLOW VELOCITY(FEET/SEC.) =  1.65   DEPTH*VELOCITY(FT*FT/SEC.) =   0.40
```

```
  LONGEST FLOWPATH FROM NODE    240.00 TO NODE    247.00 =   247.00 FEET.

****************************************************************************
  FLOW PROCESS FROM NODE    247.00 TO NODE    247.00 IS CODE =   1
----------------------------------------------------------------------------
  >>>>>DESIGNATE INDEPENDENT STREAM FOR CONFLUENCE<<<<<
============================================================================
  TOTAL NUMBER OF STREAMS =  2
  CONFLUENCE VALUES USED FOR INDEPENDENT STREAM  1 ARE:
  TIME OF CONCENTRATION(MIN.) =   8.16
  RAINFALL INTENSITY(INCH/HR) =   3.80
  TOTAL STREAM AREA(ACRES) =     0.30
  PEAK FLOW RATE(CFS) AT CONFLUENCE =      0.91

****************************************************************************
  FLOW PROCESS FROM NODE    243.00 TO NODE    245.00 IS CODE =  21
----------------------------------------------------------------------------
  >>>>>RATIONAL METHOD INITIAL SUBAREA ANALYSIS<<<<<
============================================================================
  *USER SPECIFIED(SUBAREA):
  MULTI-UNITS DEVELOPMENT RUNOFF COEFFICIENT = .8000
  S.C.S. CURVE NUMBER (AMC II) =   0
  INITIAL SUBAREA FLOW-LENGTH(FEET) =    75.00
  UPSTREAM ELEVATION(FEET) =    492.00
  DOWNSTREAM ELEVATION(FEET) =    491.00
  ELEVATION DIFFERENCE(FEET) =      1.00
  URBAN SUBAREA OVERLAND TIME OF FLOW(MIN.) =    4.249
  TIME OF CONCENTRATION ASSUMED AS 6-MIN.
   100 YEAR RAINFALL INTENSITY(INCH/HOUR) =  4.210
  SUBAREA RUNOFF(CFS) =      0.34
  TOTAL AREA(ACRES) =      0.10   TOTAL RUNOFF(CFS) =      0.34

****************************************************************************
  FLOW PROCESS FROM NODE    245.00 TO NODE    246.00 IS CODE =  62
----------------------------------------------------------------------------
  >>>>>COMPUTE STREET FLOW TRAVEL TIME THRU SUBAREA<<<<<
  >>>>>(STREET TABLE SECTION #  3 USED)<<<<<
============================================================================
  UPSTREAM ELEVATION(FEET) =  491.00  DOWNSTREAM ELEVATION(FEET) =  490.00
  STREET LENGTH(FEET) =   118.00   CURB HEIGHT(INCHES) =  6.0
  STREET HALFWIDTH(FEET) = 11.00

  DISTANCE FROM CROWN TO CROSSFALL GRADEBREAK(FEET) =   6.00
  INSIDE STREET CROSSFALL(DECIMAL) =  0.020
  OUTSIDE STREET CROSSFALL(DECIMAL)  =  0.018

  SPECIFIED NUMBER OF HALFSTREETS CARRYING RUNOFF =  1
  STREET PARKWAY CROSSFALL(DECIMAL)  =  0.020
  Manning's FRICTION FACTOR for Streetflow Section(curb-to-curb) =   0.0130
  Manning's FRICTION FACTOR for Back-of-Walk Flow Section =   0.0130
```

```
    **TRAVEL TIME COMPUTED USING ESTIMATED FLOW(CFS) =       0.53
    STREETFLOW MODEL RESULTS USING ESTIMATED FLOW:
    STREET FLOW DEPTH(FEET) =  0.21
    HALFSTREET FLOOD WIDTH(FEET) =    4.62
    AVERAGE FLOW VELOCITY(FEET/SEC.) =    1.69
    PRODUCT OF DEPTH&VELOCITY(FT*FT/SEC.) =    0.36
  STREET FLOW TRAVEL TIME(MIN.) =   1.17   Tc(MIN.) =   7.17
   100 YEAR RAINFALL INTENSITY(INCH/HOUR) =  3.988
  *USER SPECIFIED(SUBAREA):
  INDUSTRIAL DEVELOPMENT RUNOFF COEFFICIENT = .9500
  S.C.S. CURVE NUMBER (AMC II) =   0
  SUBAREA AREA(ACRES) =    0.10      SUBAREA RUNOFF(CFS) =    0.38
  TOTAL AREA(ACRES) =      0.20        PEAK FLOW RATE(CFS) =       0.72

  END OF SUBAREA STREET FLOW HYDRAULICS:
  DEPTH(FEET) = 0.23   HALFSTREET FLOOD WIDTH(FEET) =   5.52
  FLOW VELOCITY(FEET/SEC.) =  1.79   DEPTH*VELOCITY(FT*FT/SEC.) =   0.41
  LONGEST FLOWPATH FROM NODE    243.00 TO NODE    246.00 =   193.00 FEET.

****************************************************************************
  FLOW PROCESS FROM NODE    246.00 TO NODE    246.00 IS CODE =  81
----------------------------------------------------------------------------
  >>>>>ADDITION OF SUBAREA TO MAINLINE PEAK FLOW<<<<<
============================================================================
   100 YEAR RAINFALL INTENSITY(INCH/HOUR) =  3.988
  *USER SPECIFIED(SUBAREA):
  MULTI-UNITS DEVELOPMENT RUNOFF COEFFICIENT = .8300
  S.C.S. CURVE NUMBER (AMC II) =   0
  SUBAREA AREA(ACRES) =    0.50   SUBAREA RUNOFF(CFS) =    1.66
  TOTAL AREA(ACRES) =      0.70   TOTAL RUNOFF(CFS) =    2.37
  TC(MIN.) =   7.17

****************************************************************************
  FLOW PROCESS FROM NODE    246.00 TO NODE    247.00 IS CODE =  41
----------------------------------------------------------------------------
  >>>>>COMPUTE PIPE-FLOW TRAVEL TIME THRU SUBAREA<<<<<
  >>>>>USING USER-SPECIFIED PIPESIZE (EXISTING ELEMENT)<<<<<
============================================================================
  ELEVATION DATA: UPSTREAM(FEET) =   487.00  DOWNSTREAM(FEET) =   486.00
  FLOW LENGTH(FEET) =   140.00   MANNING'S N =  0.013
  DEPTH OF FLOW IN  18.0 INCH PIPE IS   6.5 INCHES
  PIPE-FLOW VELOCITY(FEET/SEC.) =   4.11
  GIVEN PIPE DIAMETER(INCH) =  18.00    NUMBER OF PIPES =   1
  PIPE-FLOW(CFS) =      2.37
  PIPE TRAVEL TIME(MIN.) =   0.57    Tc(MIN.) =   7.74
  LONGEST FLOWPATH FROM NODE    243.00 TO NODE    247.00 =   333.00 FEET.

****************************************************************************
  FLOW PROCESS FROM NODE    247.00 TO NODE    247.00 IS CODE =  81
```

```
----------------------------------------------------------------------------
  >>>>>ADDITION OF SUBAREA TO MAINLINE PEAK FLOW<<<<<
============================================================================
   100 YEAR RAINFALL INTENSITY(INCH/HOUR) =  3.880
  *USER SPECIFIED(SUBAREA):
  MULTI-UNITS DEVELOPMENT RUNOFF COEFFICIENT = .8300
  S.C.S. CURVE NUMBER (AMC II) =   0
  SUBAREA AREA(ACRES) =    1.10   SUBAREA RUNOFF(CFS) =    3.54
  TOTAL AREA(ACRES) =      1.80   TOTAL RUNOFF(CFS) =    5.91
  TC(MIN.) =   7.74

****************************************************************************
  FLOW PROCESS FROM NODE    247.00 TO NODE    247.00 IS CODE =   1
----------------------------------------------------------------------------
  >>>>>DESIGNATE INDEPENDENT STREAM FOR CONFLUENCE<<<<<
  >>>>>AND COMPUTE VARIOUS CONFLUENCED STREAM VALUES<<<<<
============================================================================
  TOTAL NUMBER OF STREAMS =  2
  CONFLUENCE VALUES USED FOR INDEPENDENT STREAM  2 ARE:
  TIME OF CONCENTRATION(MIN.) =   7.74
  RAINFALL INTENSITY(INCH/HR) =   3.88
  TOTAL STREAM AREA(ACRES) =     1.80
  PEAK FLOW RATE(CFS) AT CONFLUENCE =      5.91

  ** CONFLUENCE DATA **
  STREAM     RUNOFF      Tc      INTENSITY      AREA
  NUMBER      (CFS)    (MIN.)   (INCH/HOUR)    (ACRE)
      1        0.91     8.16        3.800          0.30
      2        5.91     7.74        3.880          1.80

  RAINFALL INTENSITY AND TIME OF CONCENTRATION RATIO
  CONFLUENCE FORMULA USED FOR  2 STREAMS.

  ** PEAK FLOW RATE TABLE **
  STREAM     RUNOFF      Tc      INTENSITY
  NUMBER      (CFS)    (MIN.)   (INCH/HOUR)
      1        6.81     7.74       3.880
      2        6.71     8.16       3.800

  COMPUTED CONFLUENCE ESTIMATES ARE AS FOLLOWS:
  PEAK FLOW RATE(CFS) =      6.81   Tc(MIN.) =    7.74
  TOTAL AREA(ACRES) =      2.10
  LONGEST FLOWPATH FROM NODE    243.00 TO NODE    247.00 =   333.00 FEET.

****************************************************************************
  FLOW PROCESS FROM NODE    247.00 TO NODE    249.00 IS CODE =  41
----------------------------------------------------------------------------
  >>>>>COMPUTE PIPE-FLOW TRAVEL TIME THRU SUBAREA<<<<<
  >>>>>USING USER-SPECIFIED PIPESIZE (EXISTING ELEMENT)<<<<<
============================================================================
```

```
  ELEVATION DATA: UPSTREAM(FEET) =   486.00  DOWNSTREAM(FEET) =   484.00
  FLOW LENGTH(FEET) =   270.00   MANNING'S N =  0.013
  DEPTH OF FLOW IN  24.0 INCH PIPE IS  10.1 INCHES
  PIPE-FLOW VELOCITY(FEET/SEC.) =   5.44
  GIVEN PIPE DIAMETER(INCH) =  24.00    NUMBER OF PIPES =   1
  PIPE-FLOW(CFS) =      6.81
  PIPE TRAVEL TIME(MIN.) =   0.83    Tc(MIN.) =   8.56
  LONGEST FLOWPATH FROM NODE    243.00 TO NODE    249.00 =   603.00 FEET.

****************************************************************************
  FLOW PROCESS FROM NODE    249.00 TO NODE    249.00 IS CODE =  81
----------------------------------------------------------------------------
  >>>>>ADDITION OF SUBAREA TO MAINLINE PEAK FLOW<<<<<
============================================================================
   100 YEAR RAINFALL INTENSITY(INCH/HOUR) =  3.723
  *USER SPECIFIED(SUBAREA):
  MULTI-UNITS DEVELOPMENT RUNOFF COEFFICIENT = .8500
  S.C.S. CURVE NUMBER (AMC II) =   0
  SUBAREA AREA(ACRES) =    0.90   SUBAREA RUNOFF(CFS) =    2.85
  TOTAL AREA(ACRES) =      3.00   TOTAL RUNOFF(CFS) =    9.66
  TC(MIN.) =   8.56

****************************************************************************
  FLOW PROCESS FROM NODE    249.00 TO NODE    254.00 IS CODE =  41
----------------------------------------------------------------------------
  >>>>>COMPUTE PIPE-FLOW TRAVEL TIME THRU SUBAREA<<<<<
  >>>>>USING USER-SPECIFIED PIPESIZE (EXISTING ELEMENT)<<<<<
============================================================================
  ELEVATION DATA: UPSTREAM(FEET) =   484.00  DOWNSTREAM(FEET) =   482.00
  FLOW LENGTH(FEET) =   239.00   MANNING'S N =  0.013
  DEPTH OF FLOW IN  24.0 INCH PIPE IS  11.9 INCHES
  PIPE-FLOW VELOCITY(FEET/SEC.) =   6.23
  GIVEN PIPE DIAMETER(INCH) =  24.00    NUMBER OF PIPES =   1
  PIPE-FLOW(CFS) =      9.66
  PIPE TRAVEL TIME(MIN.) =   0.64    Tc(MIN.) =   9.20
  LONGEST FLOWPATH FROM NODE    243.00 TO NODE    254.00 =   842.00 FEET.

****************************************************************************
  FLOW PROCESS FROM NODE    254.00 TO NODE    254.00 IS CODE =   1
----------------------------------------------------------------------------
  >>>>>DESIGNATE INDEPENDENT STREAM FOR CONFLUENCE<<<<<
============================================================================
  TOTAL NUMBER OF STREAMS =  2
  CONFLUENCE VALUES USED FOR INDEPENDENT STREAM  1 ARE:
  TIME OF CONCENTRATION(MIN.) =   9.20
  RAINFALL INTENSITY(INCH/HR) =   3.60
  TOTAL STREAM AREA(ACRES) =     3.00
  PEAK FLOW RATE(CFS) AT CONFLUENCE =      9.66

****************************************************************************
```

```
  FLOW PROCESS FROM NODE    250.00 TO NODE    251.00 IS CODE =  21
----------------------------------------------------------------------------
  >>>>>RATIONAL METHOD INITIAL SUBAREA ANALYSIS<<<<<
============================================================================
  *USER SPECIFIED(SUBAREA):
  MULTI-UNITS DEVELOPMENT RUNOFF COEFFICIENT = .8000
  S.C.S. CURVE NUMBER (AMC II) =   0
  INITIAL SUBAREA FLOW-LENGTH(FEET) =    87.00
  UPSTREAM ELEVATION(FEET) =    490.00
  DOWNSTREAM ELEVATION(FEET) =    489.00
  ELEVATION DIFFERENCE(FEET) =      1.00
  URBAN SUBAREA OVERLAND TIME OF FLOW(MIN.) =    4.808
  TIME OF CONCENTRATION ASSUMED AS 6-MIN.
   100 YEAR RAINFALL INTENSITY(INCH/HOUR) =  4.210
  SUBAREA RUNOFF(CFS) =      0.34
  TOTAL AREA(ACRES) =      0.10   TOTAL RUNOFF(CFS) =      0.34

****************************************************************************
  FLOW PROCESS FROM NODE    251.00 TO NODE    252.00 IS CODE =  62
----------------------------------------------------------------------------
  >>>>>COMPUTE STREET FLOW TRAVEL TIME THRU SUBAREA<<<<<
  >>>>>(STREET TABLE SECTION #  3 USED)<<<<<
============================================================================
  UPSTREAM ELEVATION(FEET) =  489.00  DOWNSTREAM ELEVATION(FEET) =  488.50
  STREET LENGTH(FEET) =   213.00   CURB HEIGHT(INCHES) =  6.0
  STREET HALFWIDTH(FEET) = 11.00

  DISTANCE FROM CROWN TO CROSSFALL GRADEBREAK(FEET) =   6.00
  INSIDE STREET CROSSFALL(DECIMAL) =  0.020
  OUTSIDE STREET CROSSFALL(DECIMAL)  =  0.018

  SPECIFIED NUMBER OF HALFSTREETS CARRYING RUNOFF =  1
  STREET PARKWAY CROSSFALL(DECIMAL)  =  0.020
  Manning's FRICTION FACTOR for Streetflow Section(curb-to-curb) =   0.0130
  Manning's FRICTION FACTOR for Back-of-Walk Flow Section =   0.0130

    **TRAVEL TIME COMPUTED USING ESTIMATED FLOW(CFS) =       0.98
    STREETFLOW MODEL RESULTS USING ESTIMATED FLOW:
    STREET FLOW DEPTH(FEET) =  0.29
    HALFSTREET FLOOD WIDTH(FEET) =    8.70
    AVERAGE FLOW VELOCITY(FEET/SEC.) =    1.14
    PRODUCT OF DEPTH&VELOCITY(FT*FT/SEC.) =    0.34
  STREET FLOW TRAVEL TIME(MIN.) =   3.10   Tc(MIN.) =   9.10
   100 YEAR RAINFALL INTENSITY(INCH/HOUR) =  3.620
  *USER SPECIFIED(SUBAREA):
  MULTI-UNITS DEVELOPMENT RUNOFF COEFFICIENT = .8800
  S.C.S. CURVE NUMBER (AMC II) =   0
  SUBAREA AREA(ACRES) =    0.40      SUBAREA RUNOFF(CFS) =    1.27
  TOTAL AREA(ACRES) =      0.50        PEAK FLOW RATE(CFS) =       1.61
```

```
  END OF SUBAREA STREET FLOW HYDRAULICS:
  DEPTH(FEET) = 0.33   HALFSTREET FLOOD WIDTH(FEET) =  10.77
  FLOW VELOCITY(FEET/SEC.) =  1.28   DEPTH*VELOCITY(FT*FT/SEC.) =   0.43
  LONGEST FLOWPATH FROM NODE    250.00 TO NODE    252.00 =   300.00 FEET.

****************************************************************************
  FLOW PROCESS FROM NODE    252.00 TO NODE    252.00 IS CODE =  81
----------------------------------------------------------------------------
  >>>>>ADDITION OF SUBAREA TO MAINLINE PEAK FLOW<<<<<
============================================================================
   100 YEAR RAINFALL INTENSITY(INCH/HOUR) =  3.620
  *USER SPECIFIED(SUBAREA):
  INDUSTRIAL DEVELOPMENT RUNOFF COEFFICIENT = .9500
  S.C.S. CURVE NUMBER (AMC II) =   0
  SUBAREA AREA(ACRES) =    0.40   SUBAREA RUNOFF(CFS) =    1.38
  TOTAL AREA(ACRES) =      0.90   TOTAL RUNOFF(CFS) =    2.99
  TC(MIN.) =   9.10

****************************************************************************
  FLOW PROCESS FROM NODE    252.00 TO NODE    253.00 IS CODE =  41
----------------------------------------------------------------------------
  >>>>>COMPUTE PIPE-FLOW TRAVEL TIME THRU SUBAREA<<<<<
  >>>>>USING USER-SPECIFIED PIPESIZE (EXISTING ELEMENT)<<<<<
============================================================================
  ELEVATION DATA: UPSTREAM(FEET) =   488.50  DOWNSTREAM(FEET) =   485.00
  FLOW LENGTH(FEET) =   300.00   MANNING'S N =  0.013
  DEPTH OF FLOW IN  24.0 INCH PIPE IS   5.8 INCHES
  PIPE-FLOW VELOCITY(FEET/SEC.) =   5.08
  GIVEN PIPE DIAMETER(INCH) =  24.00    NUMBER OF PIPES =   1
  PIPE-FLOW(CFS) =      2.99
  PIPE TRAVEL TIME(MIN.) =   0.98    Tc(MIN.) =  10.09
  LONGEST FLOWPATH FROM NODE    250.00 TO NODE    253.00 =   600.00 FEET.

****************************************************************************
  FLOW PROCESS FROM NODE    253.00 TO NODE    253.00 IS CODE =  81
----------------------------------------------------------------------------
  >>>>>ADDITION OF SUBAREA TO MAINLINE PEAK FLOW<<<<<
============================================================================
   100 YEAR RAINFALL INTENSITY(INCH/HOUR) =  3.440
  *USER SPECIFIED(SUBAREA):
  MULTI-UNITS DEVELOPMENT RUNOFF COEFFICIENT = .7400
  S.C.S. CURVE NUMBER (AMC II) =   0
  SUBAREA AREA(ACRES) =    0.90   SUBAREA RUNOFF(CFS) =    2.29
  TOTAL AREA(ACRES) =      1.80   TOTAL RUNOFF(CFS) =    5.28
  TC(MIN.) =  10.09

****************************************************************************
  FLOW PROCESS FROM NODE    253.00 TO NODE    254.00 IS CODE =  41
----------------------------------------------------------------------------
  >>>>>COMPUTE PIPE-FLOW TRAVEL TIME THRU SUBAREA<<<<<
```

```
  >>>>>USING USER-SPECIFIED PIPESIZE (EXISTING ELEMENT)<<<<<
============================================================================
  ELEVATION DATA: UPSTREAM(FEET) =   485.00  DOWNSTREAM(FEET) =   482.00
  FLOW LENGTH(FEET) =    37.00   MANNING'S N =  0.013
  DEPTH OF FLOW IN  24.0 INCH PIPE IS   4.8 INCHES
  PIPE-FLOW VELOCITY(FEET/SEC.) =  11.94
  GIVEN PIPE DIAMETER(INCH) =  24.00    NUMBER OF PIPES =   1
  PIPE-FLOW(CFS) =      5.28
  PIPE TRAVEL TIME(MIN.) =   0.05    Tc(MIN.) =  10.14
  LONGEST FLOWPATH FROM NODE    250.00 TO NODE    254.00 =   637.00 FEET.

****************************************************************************
  FLOW PROCESS FROM NODE    254.00 TO NODE    254.00 IS CODE =   1
----------------------------------------------------------------------------
  >>>>>DESIGNATE INDEPENDENT STREAM FOR CONFLUENCE<<<<<
  >>>>>AND COMPUTE VARIOUS CONFLUENCED STREAM VALUES<<<<<
============================================================================
  TOTAL NUMBER OF STREAMS =  2
  CONFLUENCE VALUES USED FOR INDEPENDENT STREAM  2 ARE:
  TIME OF CONCENTRATION(MIN.) =  10.14
  RAINFALL INTENSITY(INCH/HR) =   3.43
  TOTAL STREAM AREA(ACRES) =     1.80
  PEAK FLOW RATE(CFS) AT CONFLUENCE =      5.28

  ** CONFLUENCE DATA **
  STREAM     RUNOFF      Tc      INTENSITY      AREA
  NUMBER      (CFS)    (MIN.)   (INCH/HOUR)    (ACRE)
      1        9.66     9.20        3.602          3.00
      2        5.28    10.14        3.435          1.80

  RAINFALL INTENSITY AND TIME OF CONCENTRATION RATIO
  CONFLUENCE FORMULA USED FOR  2 STREAMS.

  ** PEAK FLOW RATE TABLE **
  STREAM     RUNOFF      Tc      INTENSITY
  NUMBER      (CFS)    (MIN.)   (INCH/HOUR)
      1       14.69     9.20       3.602
      2       14.49    10.14       3.435

  COMPUTED CONFLUENCE ESTIMATES ARE AS FOLLOWS:
  PEAK FLOW RATE(CFS) =     14.69   Tc(MIN.) =    9.20
  TOTAL AREA(ACRES) =      4.80
  LONGEST FLOWPATH FROM NODE    243.00 TO NODE    254.00 =   842.00 FEET.

****************************************************************************
  FLOW PROCESS FROM NODE    254.00 TO NODE    255.00 IS CODE =  41
----------------------------------------------------------------------------
  >>>>>COMPUTE PIPE-FLOW TRAVEL TIME THRU SUBAREA<<<<<
  >>>>>USING USER-SPECIFIED PIPESIZE (EXISTING ELEMENT)<<<<<
============================================================================
```

```
  ELEVATION DATA: UPSTREAM(FEET) =   482.00  DOWNSTREAM(FEET) =   481.50
  FLOW LENGTH(FEET) =    55.00   MANNING'S N =  0.013
  DEPTH OF FLOW IN  24.0 INCH PIPE IS  15.0 INCHES
  PIPE-FLOW VELOCITY(FEET/SEC.) =   7.10
  GIVEN PIPE DIAMETER(INCH) =  24.00    NUMBER OF PIPES =   1
  PIPE-FLOW(CFS) =     14.69
  PIPE TRAVEL TIME(MIN.) =   0.13    Tc(MIN.) =   9.33
  LONGEST FLOWPATH FROM NODE    243.00 TO NODE    255.00 =   897.00 FEET.

****************************************************************************
  FLOW PROCESS FROM NODE    255.00 TO NODE    255.00 IS CODE =  81
----------------------------------------------------------------------------
  >>>>>ADDITION OF SUBAREA TO MAINLINE PEAK FLOW<<<<<
============================================================================
   100 YEAR RAINFALL INTENSITY(INCH/HOUR) =  3.577
  *USER SPECIFIED(SUBAREA):
  INDUSTRIAL DEVELOPMENT RUNOFF COEFFICIENT = .9500
  S.C.S. CURVE NUMBER (AMC II) =   0
  SUBAREA AREA(ACRES) =    0.20   SUBAREA RUNOFF(CFS) =    0.68
  TOTAL AREA(ACRES) =      5.00   TOTAL RUNOFF(CFS) =   15.37
  TC(MIN.) =   9.33

****************************************************************************
  FLOW PROCESS FROM NODE    255.00 TO NODE    260.00 IS CODE =  41
----------------------------------------------------------------------------
  >>>>>COMPUTE PIPE-FLOW TRAVEL TIME THRU SUBAREA<<<<<
  >>>>>USING USER-SPECIFIED PIPESIZE (EXISTING ELEMENT)<<<<<
============================================================================
  ELEVATION DATA: UPSTREAM(FEET) =   481.50  DOWNSTREAM(FEET) =   481.25
  FLOW LENGTH(FEET) =    11.00   MANNING'S N =  0.013
  DEPTH OF FLOW IN  24.0 INCH PIPE IS  11.6 INCHES
  PIPE-FLOW VELOCITY(FEET/SEC.) =  10.18
  GIVEN PIPE DIAMETER(INCH) =  24.00    NUMBER OF PIPES =   1
  PIPE-FLOW(CFS) =     15.37
  PIPE TRAVEL TIME(MIN.) =   0.02    Tc(MIN.) =   9.35
  LONGEST FLOWPATH FROM NODE    243.00 TO NODE    260.00 =   908.00 FEET.

****************************************************************************
  FLOW PROCESS FROM NODE    260.00 TO NODE    260.00 IS CODE =   1
----------------------------------------------------------------------------
  >>>>>DESIGNATE INDEPENDENT STREAM FOR CONFLUENCE<<<<<
============================================================================
  TOTAL NUMBER OF STREAMS =  2
  CONFLUENCE VALUES USED FOR INDEPENDENT STREAM  1 ARE:
  TIME OF CONCENTRATION(MIN.) =   9.35
  RAINFALL INTENSITY(INCH/HR) =   3.57
  TOTAL STREAM AREA(ACRES) =     5.00
  PEAK FLOW RATE(CFS) AT CONFLUENCE =     15.37

****************************************************************************
```

```
  FLOW PROCESS FROM NODE    256.00 TO NODE    257.00 IS CODE =  21
----------------------------------------------------------------------------
  >>>>>RATIONAL METHOD INITIAL SUBAREA ANALYSIS<<<<<
============================================================================
  *USER SPECIFIED(SUBAREA):
  MULTI-UNITS DEVELOPMENT RUNOFF COEFFICIENT = .8800
  S.C.S. CURVE NUMBER (AMC II) =   0
  INITIAL SUBAREA FLOW-LENGTH(FEET) =    85.00
  UPSTREAM ELEVATION(FEET) =    491.00
  DOWNSTREAM ELEVATION(FEET) =    490.00
  ELEVATION DIFFERENCE(FEET) =      1.00
  URBAN SUBAREA OVERLAND TIME OF FLOW(MIN.) =    3.458
  TIME OF CONCENTRATION ASSUMED AS 6-MIN.
   100 YEAR RAINFALL INTENSITY(INCH/HOUR) =  4.210
  SUBAREA RUNOFF(CFS) =      0.74
  TOTAL AREA(ACRES) =      0.20   TOTAL RUNOFF(CFS) =      0.74

****************************************************************************
  FLOW PROCESS FROM NODE    257.00 TO NODE    258.00 IS CODE =  41
----------------------------------------------------------------------------
  >>>>>COMPUTE PIPE-FLOW TRAVEL TIME THRU SUBAREA<<<<<
  >>>>>USING USER-SPECIFIED PIPESIZE (EXISTING ELEMENT)<<<<<
============================================================================
  ELEVATION DATA: UPSTREAM(FEET) =   487.00  DOWNSTREAM(FEET) =   485.00
  FLOW LENGTH(FEET) =   288.00   MANNING'S N =  0.013
  DEPTH OF FLOW IN  18.0 INCH PIPE IS   3.6 INCHES
  PIPE-FLOW VELOCITY(FEET/SEC.) =   2.91
  GIVEN PIPE DIAMETER(INCH) =  18.00    NUMBER OF PIPES =   1
  PIPE-FLOW(CFS) =      0.74
  PIPE TRAVEL TIME(MIN.) =   1.65    Tc(MIN.) =   7.65
  LONGEST FLOWPATH FROM NODE    256.00 TO NODE    258.00 =   373.00 FEET.

****************************************************************************
  FLOW PROCESS FROM NODE    258.00 TO NODE    258.00 IS CODE =  81
----------------------------------------------------------------------------
  >>>>>ADDITION OF SUBAREA TO MAINLINE PEAK FLOW<<<<<
============================================================================
   100 YEAR RAINFALL INTENSITY(INCH/HOUR) =  3.897
  *USER SPECIFIED(SUBAREA):
  MULTI-UNITS DEVELOPMENT RUNOFF COEFFICIENT = .8400
  S.C.S. CURVE NUMBER (AMC II) =   0
  SUBAREA AREA(ACRES) =    0.80   SUBAREA RUNOFF(CFS) =    2.62
  TOTAL AREA(ACRES) =      1.00   TOTAL RUNOFF(CFS) =    3.36
  TC(MIN.) =   7.65

****************************************************************************
  FLOW PROCESS FROM NODE    258.00 TO NODE    259.00 IS CODE =  41
----------------------------------------------------------------------------
  >>>>>COMPUTE PIPE-FLOW TRAVEL TIME THRU SUBAREA<<<<<
  >>>>>USING USER-SPECIFIED PIPESIZE (EXISTING ELEMENT)<<<<<
```

```
============================================================================
  ELEVATION DATA: UPSTREAM(FEET) =   485.00  DOWNSTREAM(FEET) =   484.50
  FLOW LENGTH(FEET) =    25.00   MANNING'S N =  0.013
  DEPTH OF FLOW IN  18.0 INCH PIPE IS   6.0 INCHES
  PIPE-FLOW VELOCITY(FEET/SEC.) =   6.55
  GIVEN PIPE DIAMETER(INCH) =  18.00    NUMBER OF PIPES =   1
  PIPE-FLOW(CFS) =      3.36
  PIPE TRAVEL TIME(MIN.) =   0.06    Tc(MIN.) =   7.71
  LONGEST FLOWPATH FROM NODE    256.00 TO NODE    259.00 =   398.00 FEET.

****************************************************************************
  FLOW PROCESS FROM NODE    259.00 TO NODE    259.00 IS CODE =  81
----------------------------------------------------------------------------
  >>>>>ADDITION OF SUBAREA TO MAINLINE PEAK FLOW<<<<<
============================================================================
   100 YEAR RAINFALL INTENSITY(INCH/HOUR) =  3.885
  *USER SPECIFIED(SUBAREA):
  MULTI-UNITS DEVELOPMENT RUNOFF COEFFICIENT = .8500
  S.C.S. CURVE NUMBER (AMC II) =   0
  SUBAREA AREA(ACRES) =    0.30   SUBAREA RUNOFF(CFS) =    0.99
  TOTAL AREA(ACRES) =      1.30   TOTAL RUNOFF(CFS) =    4.35
  TC(MIN.) =   7.71

****************************************************************************
  FLOW PROCESS FROM NODE    259.00 TO NODE    260.00 IS CODE =  41
----------------------------------------------------------------------------
  >>>>>COMPUTE PIPE-FLOW TRAVEL TIME THRU SUBAREA<<<<<
  >>>>>USING USER-SPECIFIED PIPESIZE (EXISTING ELEMENT)<<<<<
============================================================================
  ELEVATION DATA: UPSTREAM(FEET) =   484.50  DOWNSTREAM(FEET) =   481.25
  FLOW LENGTH(FEET) =    95.00   MANNING'S N =  0.013
  DEPTH OF FLOW IN  24.0 INCH PIPE IS   5.4 INCHES
  PIPE-FLOW VELOCITY(FEET/SEC.) =   8.32
  GIVEN PIPE DIAMETER(INCH) =  24.00    NUMBER OF PIPES =   1
  PIPE-FLOW(CFS) =      4.35
  PIPE TRAVEL TIME(MIN.) =   0.19    Tc(MIN.) =   7.90
  LONGEST FLOWPATH FROM NODE    256.00 TO NODE    260.00 =   493.00 FEET.

****************************************************************************
  FLOW PROCESS FROM NODE    260.00 TO NODE    260.00 IS CODE =   1
----------------------------------------------------------------------------
  >>>>>DESIGNATE INDEPENDENT STREAM FOR CONFLUENCE<<<<<
  >>>>>AND COMPUTE VARIOUS CONFLUENCED STREAM VALUES<<<<<
============================================================================
  TOTAL NUMBER OF STREAMS =  2
  CONFLUENCE VALUES USED FOR INDEPENDENT STREAM  2 ARE:
  TIME OF CONCENTRATION(MIN.) =   7.90
  RAINFALL INTENSITY(INCH/HR) =   3.85
  TOTAL STREAM AREA(ACRES) =     1.30
  PEAK FLOW RATE(CFS) AT CONFLUENCE =      4.35
```

```
  ** CONFLUENCE DATA **
  STREAM     RUNOFF      Tc      INTENSITY      AREA
  NUMBER      (CFS)    (MIN.)   (INCH/HOUR)    (ACRE)
      1       15.37     9.35        3.574          5.00
      2        4.35     7.90        3.849          1.30

  RAINFALL INTENSITY AND TIME OF CONCENTRATION RATIO
  CONFLUENCE FORMULA USED FOR  2 STREAMS.

  ** PEAK FLOW RATE TABLE **
  STREAM     RUNOFF      Tc      INTENSITY
  NUMBER      (CFS)    (MIN.)   (INCH/HOUR)
      1       18.62     7.90       3.849
      2       19.41     9.35       3.574

  COMPUTED CONFLUENCE ESTIMATES ARE AS FOLLOWS:
  PEAK FLOW RATE(CFS) =     19.41   Tc(MIN.) =    9.35
  TOTAL AREA(ACRES) =      6.30
  LONGEST FLOWPATH FROM NODE    243.00 TO NODE    260.00 =   908.00 FEET.

****************************************************************************
  FLOW PROCESS FROM NODE    260.00 TO NODE    261.00 IS CODE =  41
----------------------------------------------------------------------------
  >>>>>COMPUTE PIPE-FLOW TRAVEL TIME THRU SUBAREA<<<<<
  >>>>>USING USER-SPECIFIED PIPESIZE (EXISTING ELEMENT)<<<<<
============================================================================
  ELEVATION DATA: UPSTREAM(FEET) =   481.25  DOWNSTREAM(FEET) =   481.00
  FLOW LENGTH(FEET) =    45.00   MANNING'S N =  0.013
  ASSUME FULL-FLOWING PIPELINE
  PIPE-FLOW VELOCITY(FEET/SEC.) =   6.18
  PIPE FLOW VELOCITY = (TOTAL FLOW)/(PIPE CROSS SECTION AREA)
  GIVEN PIPE DIAMETER(INCH) =  24.00    NUMBER OF PIPES =   1
  PIPE-FLOW(CFS) =     19.41
  PIPE TRAVEL TIME(MIN.) =   0.12    Tc(MIN.) =   9.47
  LONGEST FLOWPATH FROM NODE    243.00 TO NODE    261.00 =   953.00 FEET.

****************************************************************************
  FLOW PROCESS FROM NODE    261.00 TO NODE    261.00 IS CODE =  81
----------------------------------------------------------------------------
  >>>>>ADDITION OF SUBAREA TO MAINLINE PEAK FLOW<<<<<
============================================================================
   100 YEAR RAINFALL INTENSITY(INCH/HOUR) =  3.551
  *USER SPECIFIED(SUBAREA):
  INDUSTRIAL DEVELOPMENT RUNOFF COEFFICIENT = .9500
  S.C.S. CURVE NUMBER (AMC II) =   0
  SUBAREA AREA(ACRES) =    0.10   SUBAREA RUNOFF(CFS) =    0.34
  TOTAL AREA(ACRES) =      6.40   TOTAL RUNOFF(CFS) =   19.75
  TC(MIN.) =   9.47
```

```
****************************************************************************
  FLOW PROCESS FROM NODE    261.00 TO NODE    261.00 IS CODE =  81
----------------------------------------------------------------------------
  >>>>>ADDITION OF SUBAREA TO MAINLINE PEAK FLOW<<<<<
============================================================================
   100 YEAR RAINFALL INTENSITY(INCH/HOUR) =  3.551
  *USER SPECIFIED(SUBAREA):
  INDUSTRIAL DEVELOPMENT RUNOFF COEFFICIENT = .9500
  S.C.S. CURVE NUMBER (AMC II) =   0
  SUBAREA AREA(ACRES) =    0.10   SUBAREA RUNOFF(CFS) =    0.34
  TOTAL AREA(ACRES) =      6.50   TOTAL RUNOFF(CFS) =   20.08
  TC(MIN.) =   9.47

****************************************************************************
  FLOW PROCESS FROM NODE    261.00 TO NODE    265.00 IS CODE =  41
----------------------------------------------------------------------------
  >>>>>COMPUTE PIPE-FLOW TRAVEL TIME THRU SUBAREA<<<<<
  >>>>>USING USER-SPECIFIED PIPESIZE (EXISTING ELEMENT)<<<<<
============================================================================
  ELEVATION DATA: UPSTREAM(FEET) =   481.00  DOWNSTREAM(FEET) =   479.00
  FLOW LENGTH(FEET) =   203.00   MANNING'S N =  0.013
  DEPTH OF FLOW IN  30.0 INCH PIPE IS  15.3 INCHES
  PIPE-FLOW VELOCITY(FEET/SEC.) =   7.95
  GIVEN PIPE DIAMETER(INCH) =  30.00    NUMBER OF PIPES =   1
  PIPE-FLOW(CFS) =     20.08
  PIPE TRAVEL TIME(MIN.) =   0.43    Tc(MIN.) =   9.90
  LONGEST FLOWPATH FROM NODE    243.00 TO NODE    265.00 =  1156.00 FEET.

****************************************************************************
  FLOW PROCESS FROM NODE    265.00 TO NODE    265.00 IS CODE =  81
----------------------------------------------------------------------------
  >>>>>ADDITION OF SUBAREA TO MAINLINE PEAK FLOW<<<<<
============================================================================
   100 YEAR RAINFALL INTENSITY(INCH/HOUR) =  3.470
  *USER SPECIFIED(SUBAREA):
  INDUSTRIAL DEVELOPMENT RUNOFF COEFFICIENT = .9500
  S.C.S. CURVE NUMBER (AMC II) =   0
  SUBAREA AREA(ACRES) =    1.10   SUBAREA RUNOFF(CFS) =    3.63
  TOTAL AREA(ACRES) =      7.60   TOTAL RUNOFF(CFS) =   23.71
  TC(MIN.) =   9.90

****************************************************************************
  FLOW PROCESS FROM NODE    265.00 TO NODE    268.00 IS CODE =  41
----------------------------------------------------------------------------
  >>>>>COMPUTE PIPE-FLOW TRAVEL TIME THRU SUBAREA<<<<<
  >>>>>USING USER-SPECIFIED PIPESIZE (EXISTING ELEMENT)<<<<<
============================================================================
  ELEVATION DATA: UPSTREAM(FEET) =   479.00  DOWNSTREAM(FEET) =   478.00
  FLOW LENGTH(FEET) =    70.00   MANNING'S N =  0.013
  DEPTH OF FLOW IN  36.0 INCH PIPE IS  13.8 INCHES
```

```
  PIPE-FLOW VELOCITY(FEET/SEC.) =   9.47
  GIVEN PIPE DIAMETER(INCH) =  36.00    NUMBER OF PIPES =   1
  PIPE-FLOW(CFS) =     23.71
  PIPE TRAVEL TIME(MIN.) =   0.12    Tc(MIN.) =  10.02
  LONGEST FLOWPATH FROM NODE    243.00 TO NODE    268.00 =  1226.00 FEET.

****************************************************************************
  FLOW PROCESS FROM NODE    268.00 TO NODE    268.00 IS CODE =  11
----------------------------------------------------------------------------
  >>>>>CONFLUENCE MEMORY BANK # 1 WITH THE MAIN-STREAM MEMORY<<<<<
============================================================================

  ** MAIN STREAM CONFLUENCE DATA **
  STREAM     RUNOFF     Tc      INTENSITY     AREA
  NUMBER      (CFS)   (MIN.)   (INCH/HOUR)   (ACRE)
      1       23.71    10.02       3.448        7.60
  LONGEST FLOWPATH FROM NODE    243.00 TO NODE    268.00 =  1226.00 FEET.

  ** MEMORY BANK #  1 CONFLUENCE DATA **
  STREAM     RUNOFF     Tc      INTENSITY     AREA
  NUMBER      (CFS)   (MIN.)   (INCH/HOUR)   (ACRE)
      1       21.36    13.88       3.023        7.60
  LONGEST FLOWPATH FROM NODE    200.00 TO NODE    268.00 =  1651.00 FEET.

  ** PEAK FLOW RATE TABLE **
  STREAM    RUNOFF       Tc      INTENSITY
  NUMBER     (CFS)     (MIN.)   (INCH/HOUR)
      1      42.44      10.02        3.448
      2      42.15      13.88        3.023

  COMPUTED CONFLUENCE ESTIMATES ARE AS FOLLOWS:
  PEAK FLOW RATE(CFS) =     42.44   Tc(MIN.) =   10.02
  TOTAL AREA(ACRES) =     15.20

****************************************************************************
  FLOW PROCESS FROM NODE    268.00 TO NODE    268.00 IS CODE =  12
----------------------------------------------------------------------------
  >>>>>CLEAR MEMORY BANK # 1 <<<<<
============================================================================

****************************************************************************
  FLOW PROCESS FROM NODE    268.00 TO NODE    269.00 IS CODE =  41
----------------------------------------------------------------------------
  >>>>>COMPUTE PIPE-FLOW TRAVEL TIME THRU SUBAREA<<<<<
  >>>>>USING USER-SPECIFIED PIPESIZE (EXISTING ELEMENT)<<<<<
============================================================================
  ELEVATION DATA: UPSTREAM(FEET) =   478.00  DOWNSTREAM(FEET) =   475.00
  FLOW LENGTH(FEET) =   474.00   MANNING'S N =  0.013
  DEPTH OF FLOW IN  36.0 INCH PIPE IS  25.3 INCHES
  PIPE-FLOW VELOCITY(FEET/SEC.) =   7.99
```

```
  GIVEN PIPE DIAMETER(INCH) =  36.00    NUMBER OF PIPES =   1
  PIPE-FLOW(CFS) =     42.44
  PIPE TRAVEL TIME(MIN.) =   0.99    Tc(MIN.) =  11.01
  LONGEST FLOWPATH FROM NODE    200.00 TO NODE    269.00 =  2125.00 FEET.

****************************************************************************
  FLOW PROCESS FROM NODE    269.00 TO NODE    269.00 IS CODE =  81
----------------------------------------------------------------------------
  >>>>>ADDITION OF SUBAREA TO MAINLINE PEAK FLOW<<<<<
============================================================================
   100 YEAR RAINFALL INTENSITY(INCH/HOUR) =  3.339
  *USER SPECIFIED(SUBAREA):
  INDUSTRIAL DEVELOPMENT RUNOFF COEFFICIENT = .9500
  S.C.S. CURVE NUMBER (AMC II) =   0
  SUBAREA AREA(ACRES) =    1.00   SUBAREA RUNOFF(CFS) =    3.17
  TOTAL AREA(ACRES) =     16.20   TOTAL RUNOFF(CFS) =   45.61
  TC(MIN.) =  11.01

****************************************************************************
  FLOW PROCESS FROM NODE    269.00 TO NODE    287.00 IS CODE =  41
----------------------------------------------------------------------------
  >>>>>COMPUTE PIPE-FLOW TRAVEL TIME THRU SUBAREA<<<<<
  >>>>>USING USER-SPECIFIED PIPESIZE (EXISTING ELEMENT)<<<<<
============================================================================
  ELEVATION DATA: UPSTREAM(FEET) =   475.00  DOWNSTREAM(FEET) =   470.00
  FLOW LENGTH(FEET) =   310.00   MANNING'S N =  0.013
  DEPTH OF FLOW IN  42.0 INCH PIPE IS  17.8 INCHES
  PIPE-FLOW VELOCITY(FEET/SEC.) =  11.72
  GIVEN PIPE DIAMETER(INCH) =  42.00    NUMBER OF PIPES =   1
  PIPE-FLOW(CFS) =     45.61
  PIPE TRAVEL TIME(MIN.) =   0.44    Tc(MIN.) =  11.45
  LONGEST FLOWPATH FROM NODE    200.00 TO NODE    287.00 =  2435.00 FEET.

****************************************************************************
  FLOW PROCESS FROM NODE    287.00 TO NODE    287.00 IS CODE =  10
----------------------------------------------------------------------------
  >>>>>MAIN-STREAM MEMORY COPIED ONTO MEMORY BANK # 1 <<<<<
============================================================================

****************************************************************************
  FLOW PROCESS FROM NODE    270.00 TO NODE    271.00 IS CODE =  21
----------------------------------------------------------------------------
  >>>>>RATIONAL METHOD INITIAL SUBAREA ANALYSIS<<<<<
============================================================================
  *USER SPECIFIED(SUBAREA):
  SINGLE FAMILY DEVELOPMENT RUNOFF COEFFICIENT = .7900
  S.C.S. CURVE NUMBER (AMC II) =   0
  INITIAL SUBAREA FLOW-LENGTH(FEET) =    96.00
  UPSTREAM ELEVATION(FEET) =    496.00
  DOWNSTREAM ELEVATION(FEET) =    495.00
```

```
  ELEVATION DIFFERENCE(FEET) =      1.00
  URBAN SUBAREA OVERLAND TIME OF FLOW(MIN.) =    5.393
  TIME OF CONCENTRATION ASSUMED AS 6-MIN.
   100 YEAR RAINFALL INTENSITY(INCH/HOUR) =  4.210
  SUBAREA RUNOFF(CFS) =      0.33
  TOTAL AREA(ACRES) =      0.10   TOTAL RUNOFF(CFS) =      0.33

****************************************************************************
  FLOW PROCESS FROM NODE    271.00 TO NODE    272.00 IS CODE =  62
----------------------------------------------------------------------------
  >>>>>COMPUTE STREET FLOW TRAVEL TIME THRU SUBAREA<<<<<
  >>>>>(STREET TABLE SECTION #  2 USED)<<<<<
============================================================================
  UPSTREAM ELEVATION(FEET) =  495.00  DOWNSTREAM ELEVATION(FEET) =  490.00
  STREET LENGTH(FEET) =   134.00   CURB HEIGHT(INCHES) =  6.0
  STREET HALFWIDTH(FEET) = 20.00

  DISTANCE FROM CROWN TO CROSSFALL GRADEBREAK(FEET) =  15.00
  INSIDE STREET CROSSFALL(DECIMAL) =  0.020
  OUTSIDE STREET CROSSFALL(DECIMAL)  =  0.020

  SPECIFIED NUMBER OF HALFSTREETS CARRYING RUNOFF =  2
  STREET PARKWAY CROSSFALL(DECIMAL)  =  0.020
  Manning's FRICTION FACTOR for Streetflow Section(curb-to-curb) =   0.0180
  Manning's FRICTION FACTOR for Back-of-Walk Flow Section =   0.0200

    **TRAVEL TIME COMPUTED USING ESTIMATED FLOW(CFS) =       0.83
    STREETFLOW MODEL RESULTS USING ESTIMATED FLOW:
    STREET FLOW DEPTH(FEET) =  0.17
    HALFSTREET FLOOD WIDTH(FEET) =    3.06
    AVERAGE FLOW VELOCITY(FEET/SEC.) =    2.30
    PRODUCT OF DEPTH&VELOCITY(FT*FT/SEC.) =    0.38
  STREET FLOW TRAVEL TIME(MIN.) =   0.97   Tc(MIN.) =   6.97
   100 YEAR RAINFALL INTENSITY(INCH/HOUR) =  4.026
  *USER SPECIFIED(SUBAREA):
  SINGLE FAMILY DEVELOPMENT RUNOFF COEFFICIENT = .8200
  S.C.S. CURVE NUMBER (AMC II) =   0
  SUBAREA AREA(ACRES) =    0.30      SUBAREA RUNOFF(CFS) =    0.99
  TOTAL AREA(ACRES) =      0.40        PEAK FLOW RATE(CFS) =       1.32

  END OF SUBAREA STREET FLOW HYDRAULICS:
  DEPTH(FEET) = 0.19   HALFSTREET FLOOD WIDTH(FEET) =   4.32
  FLOW VELOCITY(FEET/SEC.) =  2.43   DEPTH*VELOCITY(FT*FT/SEC.) =   0.46
  LONGEST FLOWPATH FROM NODE    270.00 TO NODE    272.00 =   230.00 FEET.

****************************************************************************
  FLOW PROCESS FROM NODE    272.00 TO NODE    272.00 IS CODE =  81
----------------------------------------------------------------------------
  >>>>>ADDITION OF SUBAREA TO MAINLINE PEAK FLOW<<<<<
============================================================================
```

```
   100 YEAR RAINFALL INTENSITY(INCH/HOUR) =  4.026
  *USER SPECIFIED(SUBAREA):
  SINGLE FAMILY DEVELOPMENT RUNOFF COEFFICIENT = .7300
  S.C.S. CURVE NUMBER (AMC II) =   0
  SUBAREA AREA(ACRES) =    0.40   SUBAREA RUNOFF(CFS) =    1.18
  TOTAL AREA(ACRES) =      0.80   TOTAL RUNOFF(CFS) =    2.50
  TC(MIN.) =   6.97

****************************************************************************
  FLOW PROCESS FROM NODE    272.00 TO NODE    273.00 IS CODE =  41
----------------------------------------------------------------------------
  >>>>>COMPUTE PIPE-FLOW TRAVEL TIME THRU SUBAREA<<<<<
  >>>>>USING USER-SPECIFIED PIPESIZE (EXISTING ELEMENT)<<<<<
============================================================================
  ELEVATION DATA: UPSTREAM(FEET) =   487.00  DOWNSTREAM(FEET) =   485.00
  FLOW LENGTH(FEET) =   257.00   MANNING'S N =  0.013
  DEPTH OF FLOW IN  18.0 INCH PIPE IS   6.6 INCHES
  PIPE-FLOW VELOCITY(FEET/SEC.) =   4.29
  GIVEN PIPE DIAMETER(INCH) =  18.00    NUMBER OF PIPES =   1
  PIPE-FLOW(CFS) =      2.50
  PIPE TRAVEL TIME(MIN.) =   1.00    Tc(MIN.) =   7.97
  LONGEST FLOWPATH FROM NODE    270.00 TO NODE    273.00 =   487.00 FEET.

****************************************************************************
  FLOW PROCESS FROM NODE    273.00 TO NODE    273.00 IS CODE =  81
----------------------------------------------------------------------------
  >>>>>ADDITION OF SUBAREA TO MAINLINE PEAK FLOW<<<<<
============================================================================
   100 YEAR RAINFALL INTENSITY(INCH/HOUR) =  3.836
  *USER SPECIFIED(SUBAREA):
  SINGLE FAMILY DEVELOPMENT RUNOFF COEFFICIENT = .6100
  S.C.S. CURVE NUMBER (AMC II) =   0
  SUBAREA AREA(ACRES) =    0.90   SUBAREA RUNOFF(CFS) =    2.11
  TOTAL AREA(ACRES) =      1.70   TOTAL RUNOFF(CFS) =    4.60
  TC(MIN.) =   7.97

****************************************************************************
  FLOW PROCESS FROM NODE    273.00 TO NODE    274.00 IS CODE =  41
----------------------------------------------------------------------------
  >>>>>COMPUTE PIPE-FLOW TRAVEL TIME THRU SUBAREA<<<<<
  >>>>>USING USER-SPECIFIED PIPESIZE (EXISTING ELEMENT)<<<<<
============================================================================
  ELEVATION DATA: UPSTREAM(FEET) =   485.00  DOWNSTREAM(FEET) =   484.00
  FLOW LENGTH(FEET) =   177.00   MANNING'S N =  0.013
  DEPTH OF FLOW IN  24.0 INCH PIPE IS   8.8 INCHES
  PIPE-FLOW VELOCITY(FEET/SEC.) =   4.43
  GIVEN PIPE DIAMETER(INCH) =  24.00    NUMBER OF PIPES =   1
  PIPE-FLOW(CFS) =      4.60
  PIPE TRAVEL TIME(MIN.) =   0.67    Tc(MIN.) =   8.63
  LONGEST FLOWPATH FROM NODE    270.00 TO NODE    274.00 =   664.00 FEET.
```

```
****************************************************************************
  FLOW PROCESS FROM NODE    274.00 TO NODE    274.00 IS CODE =  81
----------------------------------------------------------------------------
  >>>>>ADDITION OF SUBAREA TO MAINLINE PEAK FLOW<<<<<
============================================================================
   100 YEAR RAINFALL INTENSITY(INCH/HOUR) =  3.710
  *USER SPECIFIED(SUBAREA):
  SINGLE FAMILY DEVELOPMENT RUNOFF COEFFICIENT = .8000
  S.C.S. CURVE NUMBER (AMC II) =   0
  SUBAREA AREA(ACRES) =    0.90   SUBAREA RUNOFF(CFS) =    2.67
  TOTAL AREA(ACRES) =      2.60   TOTAL RUNOFF(CFS) =    7.28
  TC(MIN.) =   8.63

****************************************************************************
  FLOW PROCESS FROM NODE    274.00 TO NODE    275.00 IS CODE =  41
----------------------------------------------------------------------------
  >>>>>COMPUTE PIPE-FLOW TRAVEL TIME THRU SUBAREA<<<<<
  >>>>>USING USER-SPECIFIED PIPESIZE (EXISTING ELEMENT)<<<<<
============================================================================
  ELEVATION DATA: UPSTREAM(FEET) =   484.00  DOWNSTREAM(FEET) =   483.00
  FLOW LENGTH(FEET) =   141.00   MANNING'S N =  0.013
  DEPTH OF FLOW IN  24.0 INCH PIPE IS  10.6 INCHES
  PIPE-FLOW VELOCITY(FEET/SEC.) =   5.45
  GIVEN PIPE DIAMETER(INCH) =  24.00    NUMBER OF PIPES =   1
  PIPE-FLOW(CFS) =      7.28
  PIPE TRAVEL TIME(MIN.) =   0.43    Tc(MIN.) =   9.06
  LONGEST FLOWPATH FROM NODE    270.00 TO NODE    275.00 =   805.00 FEET.

****************************************************************************
  FLOW PROCESS FROM NODE    275.00 TO NODE    275.00 IS CODE =  81
----------------------------------------------------------------------------
  >>>>>ADDITION OF SUBAREA TO MAINLINE PEAK FLOW<<<<<
============================================================================
   100 YEAR RAINFALL INTENSITY(INCH/HOUR) =  3.628
  *USER SPECIFIED(SUBAREA):
  SINGLE FAMILY DEVELOPMENT RUNOFF COEFFICIENT = .8200
  S.C.S. CURVE NUMBER (AMC II) =   0
  SUBAREA AREA(ACRES) =    0.60   SUBAREA RUNOFF(CFS) =    1.78
  TOTAL AREA(ACRES) =      3.20   TOTAL RUNOFF(CFS) =    9.06
  TC(MIN.) =   9.06

****************************************************************************
  FLOW PROCESS FROM NODE    275.00 TO NODE    280.00 IS CODE =  41
----------------------------------------------------------------------------
  >>>>>COMPUTE PIPE-FLOW TRAVEL TIME THRU SUBAREA<<<<<
  >>>>>USING USER-SPECIFIED PIPESIZE (EXISTING ELEMENT)<<<<<
============================================================================
  ELEVATION DATA: UPSTREAM(FEET) =   483.00  DOWNSTREAM(FEET) =   482.00
  FLOW LENGTH(FEET) =    77.00   MANNING'S N =  0.013
```

```
  DEPTH OF FLOW IN  24.0 INCH PIPE IS  10.1 INCHES
  PIPE-FLOW VELOCITY(FEET/SEC.) =   7.22
  GIVEN PIPE DIAMETER(INCH) =  24.00    NUMBER OF PIPES =   1
  PIPE-FLOW(CFS) =      9.06
  PIPE TRAVEL TIME(MIN.) =   0.18    Tc(MIN.) =   9.24
  LONGEST FLOWPATH FROM NODE    270.00 TO NODE    280.00 =   882.00 FEET.

****************************************************************************
  FLOW PROCESS FROM NODE    280.00 TO NODE    280.00 IS CODE =  81
----------------------------------------------------------------------------
  >>>>>ADDITION OF SUBAREA TO MAINLINE PEAK FLOW<<<<<
============================================================================
   100 YEAR RAINFALL INTENSITY(INCH/HOUR) =  3.594
  *USER SPECIFIED(SUBAREA):
  SINGLE FAMILY DEVELOPMENT RUNOFF COEFFICIENT = .8000
  S.C.S. CURVE NUMBER (AMC II) =   0
  SUBAREA AREA(ACRES) =    0.20   SUBAREA RUNOFF(CFS) =    0.58
  TOTAL AREA(ACRES) =      3.40   TOTAL RUNOFF(CFS) =    9.64
  TC(MIN.) =   9.24

****************************************************************************
  FLOW PROCESS FROM NODE    280.00 TO NODE    280.00 IS CODE =   1
----------------------------------------------------------------------------
  >>>>>DESIGNATE INDEPENDENT STREAM FOR CONFLUENCE<<<<<
============================================================================
  TOTAL NUMBER OF STREAMS =  2
  CONFLUENCE VALUES USED FOR INDEPENDENT STREAM  1 ARE:
  TIME OF CONCENTRATION(MIN.) =   9.24
  RAINFALL INTENSITY(INCH/HR) =   3.59
  TOTAL STREAM AREA(ACRES) =     3.40
  PEAK FLOW RATE(CFS) AT CONFLUENCE =      9.64

****************************************************************************
  FLOW PROCESS FROM NODE    276.00 TO NODE    277.00 IS CODE =  21
----------------------------------------------------------------------------
  >>>>>RATIONAL METHOD INITIAL SUBAREA ANALYSIS<<<<<
============================================================================
  *USER SPECIFIED(SUBAREA):
  SINGLE FAMILY DEVELOPMENT RUNOFF COEFFICIENT = .7900
  S.C.S. CURVE NUMBER (AMC II) =   0
  INITIAL SUBAREA FLOW-LENGTH(FEET) =    98.00
  UPSTREAM ELEVATION(FEET) =    492.00
  DOWNSTREAM ELEVATION(FEET) =    491.00
  ELEVATION DIFFERENCE(FEET) =      1.00
  URBAN SUBAREA OVERLAND TIME OF FLOW(MIN.) =    5.487
  TIME OF CONCENTRATION ASSUMED AS 6-MIN.
   100 YEAR RAINFALL INTENSITY(INCH/HOUR) =  4.210
  SUBAREA RUNOFF(CFS) =      0.33
  TOTAL AREA(ACRES) =      0.10   TOTAL RUNOFF(CFS) =      0.33
```

```
****************************************************************************
  FLOW PROCESS FROM NODE    277.00 TO NODE    278.00 IS CODE =  62
----------------------------------------------------------------------------
  >>>>>COMPUTE STREET FLOW TRAVEL TIME THRU SUBAREA<<<<<
  >>>>>(STREET TABLE SECTION #  2 USED)<<<<<
============================================================================
  UPSTREAM ELEVATION(FEET) =  491.00  DOWNSTREAM ELEVATION(FEET) =  489.00
  STREET LENGTH(FEET) =   169.00   CURB HEIGHT(INCHES) =  6.0
  STREET HALFWIDTH(FEET) = 20.00

  DISTANCE FROM CROWN TO CROSSFALL GRADEBREAK(FEET) =  15.00
  INSIDE STREET CROSSFALL(DECIMAL) =  0.020
  OUTSIDE STREET CROSSFALL(DECIMAL)  =  0.020

  SPECIFIED NUMBER OF HALFSTREETS CARRYING RUNOFF =  2
  STREET PARKWAY CROSSFALL(DECIMAL)  =  0.020
  Manning's FRICTION FACTOR for Streetflow Section(curb-to-curb) =   0.0180
  Manning's FRICTION FACTOR for Back-of-Walk Flow Section =   0.0200

    **TRAVEL TIME COMPUTED USING ESTIMATED FLOW(CFS) =       0.95
    STREETFLOW MODEL RESULTS USING ESTIMATED FLOW:
    STREET FLOW DEPTH(FEET) =  0.20
    HALFSTREET FLOOD WIDTH(FEET) =    4.97
    AVERAGE FLOW VELOCITY(FEET/SEC.) =    1.43
    PRODUCT OF DEPTH&VELOCITY(FT*FT/SEC.) =    0.29
  STREET FLOW TRAVEL TIME(MIN.) =   1.97   Tc(MIN.) =   7.97
   100 YEAR RAINFALL INTENSITY(INCH/HOUR) =  3.836
  *USER SPECIFIED(SUBAREA):
  SINGLE FAMILY DEVELOPMENT RUNOFF COEFFICIENT = .8100
  S.C.S. CURVE NUMBER (AMC II) =   0
  SUBAREA AREA(ACRES) =    0.40      SUBAREA RUNOFF(CFS) =    1.24
  TOTAL AREA(ACRES) =      0.50        PEAK FLOW RATE(CFS) =       1.58

  END OF SUBAREA STREET FLOW HYDRAULICS:
  DEPTH(FEET) = 0.23   HALFSTREET FLOOD WIDTH(FEET) =   6.38
  FLOW VELOCITY(FEET/SEC.) =  1.60   DEPTH*VELOCITY(FT*FT/SEC.) =   0.37
  LONGEST FLOWPATH FROM NODE    276.00 TO NODE    278.00 =   267.00 FEET.

****************************************************************************
  FLOW PROCESS FROM NODE    278.00 TO NODE    278.00 IS CODE =  81
----------------------------------------------------------------------------
  >>>>>ADDITION OF SUBAREA TO MAINLINE PEAK FLOW<<<<<
============================================================================
   100 YEAR RAINFALL INTENSITY(INCH/HOUR) =  3.836
  *USER SPECIFIED(SUBAREA):
  SINGLE FAMILY DEVELOPMENT RUNOFF COEFFICIENT = .7900
  S.C.S. CURVE NUMBER (AMC II) =   0
  SUBAREA AREA(ACRES) =    0.50   SUBAREA RUNOFF(CFS) =    1.52
  TOTAL AREA(ACRES) =      1.00   TOTAL RUNOFF(CFS) =    3.09
  TC(MIN.) =   7.97
```

```
****************************************************************************
  FLOW PROCESS FROM NODE    278.00 TO NODE    280.00 IS CODE =  41
----------------------------------------------------------------------------
  >>>>>COMPUTE PIPE-FLOW TRAVEL TIME THRU SUBAREA<<<<<
  >>>>>USING USER-SPECIFIED PIPESIZE (EXISTING ELEMENT)<<<<<
============================================================================
  ELEVATION DATA: UPSTREAM(FEET) =   485.00  DOWNSTREAM(FEET) =   482.00
  FLOW LENGTH(FEET) =   248.00   MANNING'S N =  0.013
  DEPTH OF FLOW IN  24.0 INCH PIPE IS   5.9 INCHES
  PIPE-FLOW VELOCITY(FEET/SEC.) =   5.20
  GIVEN PIPE DIAMETER(INCH) =  24.00    NUMBER OF PIPES =   1
  PIPE-FLOW(CFS) =      3.09
  PIPE TRAVEL TIME(MIN.) =   0.79    Tc(MIN.) =   8.76
  LONGEST FLOWPATH FROM NODE    276.00 TO NODE    280.00 =   515.00 FEET.

****************************************************************************
  FLOW PROCESS FROM NODE    280.00 TO NODE    280.00 IS CODE =  81
----------------------------------------------------------------------------
  >>>>>ADDITION OF SUBAREA TO MAINLINE PEAK FLOW<<<<<
============================================================================
   100 YEAR RAINFALL INTENSITY(INCH/HOUR) =  3.685
  *USER SPECIFIED(SUBAREA):
  SINGLE FAMILY DEVELOPMENT RUNOFF COEFFICIENT = .8000
  S.C.S. CURVE NUMBER (AMC II) =   0
  SUBAREA AREA(ACRES) =    0.80   SUBAREA RUNOFF(CFS) =    2.36
  TOTAL AREA(ACRES) =      1.80   TOTAL RUNOFF(CFS) =    5.45
  TC(MIN.) =   8.76

****************************************************************************
  FLOW PROCESS FROM NODE    280.00 TO NODE    280.00 IS CODE =   1
----------------------------------------------------------------------------
  >>>>>DESIGNATE INDEPENDENT STREAM FOR CONFLUENCE<<<<<
  >>>>>AND COMPUTE VARIOUS CONFLUENCED STREAM VALUES<<<<<
============================================================================
  TOTAL NUMBER OF STREAMS =  2
  CONFLUENCE VALUES USED FOR INDEPENDENT STREAM  2 ARE:
  TIME OF CONCENTRATION(MIN.) =   8.76
  RAINFALL INTENSITY(INCH/HR) =   3.69
  TOTAL STREAM AREA(ACRES) =     1.80
  PEAK FLOW RATE(CFS) AT CONFLUENCE =      5.45

  ** CONFLUENCE DATA **
  STREAM     RUNOFF      Tc      INTENSITY      AREA
  NUMBER      (CFS)    (MIN.)   (INCH/HOUR)    (ACRE)
      1        9.64     9.24        3.594          3.40
      2        5.45     8.76        3.685          1.80

  RAINFALL INTENSITY AND TIME OF CONCENTRATION RATIO
  CONFLUENCE FORMULA USED FOR  2 STREAMS.
```

```
  ** PEAK FLOW RATE TABLE **
  STREAM     RUNOFF      Tc      INTENSITY
  NUMBER      (CFS)    (MIN.)   (INCH/HOUR)
      1       14.85     8.76       3.685
      2       14.95     9.24       3.594

  COMPUTED CONFLUENCE ESTIMATES ARE AS FOLLOWS:
  PEAK FLOW RATE(CFS) =     14.95   Tc(MIN.) =    9.24
  TOTAL AREA(ACRES) =      5.20
  LONGEST FLOWPATH FROM NODE    270.00 TO NODE    280.00 =   882.00 FEET.

****************************************************************************
  FLOW PROCESS FROM NODE    280.00 TO NODE    281.00 IS CODE =  41
----------------------------------------------------------------------------
  >>>>>COMPUTE PIPE-FLOW TRAVEL TIME THRU SUBAREA<<<<<
  >>>>>USING USER-SPECIFIED PIPESIZE (EXISTING ELEMENT)<<<<<
============================================================================
  ELEVATION DATA: UPSTREAM(FEET) =   482.00  DOWNSTREAM(FEET) =   481.00
  FLOW LENGTH(FEET) =    34.00   MANNING'S N =  0.013
  DEPTH OF FLOW IN  30.0 INCH PIPE IS   9.6 INCHES
  PIPE-FLOW VELOCITY(FEET/SEC.) =  10.98
  GIVEN PIPE DIAMETER(INCH) =  30.00    NUMBER OF PIPES =   1
  PIPE-FLOW(CFS) =     14.95
  PIPE TRAVEL TIME(MIN.) =   0.05    Tc(MIN.) =   9.29
  LONGEST FLOWPATH FROM NODE    270.00 TO NODE    281.00 =   916.00 FEET.

****************************************************************************
  FLOW PROCESS FROM NODE    281.00 TO NODE    281.00 IS CODE =  81
----------------------------------------------------------------------------
  >>>>>ADDITION OF SUBAREA TO MAINLINE PEAK FLOW<<<<<
============================================================================
   100 YEAR RAINFALL INTENSITY(INCH/HOUR) =  3.584
  *USER SPECIFIED(SUBAREA):
  SINGLE FAMILY DEVELOPMENT RUNOFF COEFFICIENT = .7900
  S.C.S. CURVE NUMBER (AMC II) =   0
  SUBAREA AREA(ACRES) =    0.60   SUBAREA RUNOFF(CFS) =    1.70
  TOTAL AREA(ACRES) =      5.80   TOTAL RUNOFF(CFS) =   16.65
  TC(MIN.) =   9.29

****************************************************************************
  FLOW PROCESS FROM NODE    281.00 TO NODE    281.00 IS CODE =  81
----------------------------------------------------------------------------
  >>>>>ADDITION OF SUBAREA TO MAINLINE PEAK FLOW<<<<<
============================================================================
   100 YEAR RAINFALL INTENSITY(INCH/HOUR) =  3.584
  *USER SPECIFIED(SUBAREA):
  SINGLE FAMILY DEVELOPMENT RUNOFF COEFFICIENT = .8000
  S.C.S. CURVE NUMBER (AMC II) =   0
  SUBAREA AREA(ACRES) =    0.90   SUBAREA RUNOFF(CFS) =    2.58
```

```
  TOTAL AREA(ACRES) =      6.70   TOTAL RUNOFF(CFS) =   19.23
  TC(MIN.) =   9.29

****************************************************************************
  FLOW PROCESS FROM NODE    281.00 TO NODE    287.00 IS CODE =  41
----------------------------------------------------------------------------
  >>>>>COMPUTE PIPE-FLOW TRAVEL TIME THRU SUBAREA<<<<<
  >>>>>USING USER-SPECIFIED PIPESIZE (EXISTING ELEMENT)<<<<<
============================================================================
  ELEVATION DATA: UPSTREAM(FEET) =   481.00  DOWNSTREAM(FEET) =   470.00
  FLOW LENGTH(FEET) =   137.00   MANNING'S N =  0.013
  DEPTH OF FLOW IN  36.0 INCH PIPE IS   8.0 INCHES
  PIPE-FLOW VELOCITY(FEET/SEC.) =  16.58
  GIVEN PIPE DIAMETER(INCH) =  36.00    NUMBER OF PIPES =   1
  PIPE-FLOW(CFS) =     19.23
  PIPE TRAVEL TIME(MIN.) =   0.14    Tc(MIN.) =   9.43
  LONGEST FLOWPATH FROM NODE    270.00 TO NODE    287.00 =  1053.00 FEET.

****************************************************************************
  FLOW PROCESS FROM NODE    287.00 TO NODE    287.00 IS CODE =  81
----------------------------------------------------------------------------
  >>>>>ADDITION OF SUBAREA TO MAINLINE PEAK FLOW<<<<<
============================================================================
   100 YEAR RAINFALL INTENSITY(INCH/HOUR) =  3.558
  *USER SPECIFIED(SUBAREA):
  RURAL DEVELOPMENT RUNOFF COEFFICIENT = .4500
  S.C.S. CURVE NUMBER (AMC II) =   0
  SUBAREA AREA(ACRES) =    0.50   SUBAREA RUNOFF(CFS) =    0.80
  TOTAL AREA(ACRES) =      7.20   TOTAL RUNOFF(CFS) =   20.03
  TC(MIN.) =   9.43

****************************************************************************
  FLOW PROCESS FROM NODE    287.00 TO NODE    287.00 IS CODE =  81
----------------------------------------------------------------------------
  >>>>>ADDITION OF SUBAREA TO MAINLINE PEAK FLOW<<<<<
============================================================================
   100 YEAR RAINFALL INTENSITY(INCH/HOUR) =  3.558
  *USER SPECIFIED(SUBAREA):
  RURAL DEVELOPMENT RUNOFF COEFFICIENT = .4500
  S.C.S. CURVE NUMBER (AMC II) =   0
  SUBAREA AREA(ACRES) =    0.50   SUBAREA RUNOFF(CFS) =    0.80
  TOTAL AREA(ACRES) =      7.70   TOTAL RUNOFF(CFS) =   20.83
  TC(MIN.) =   9.43

****************************************************************************
  FLOW PROCESS FROM NODE    287.00 TO NODE    287.00 IS CODE =  11
----------------------------------------------------------------------------
  >>>>>CONFLUENCE MEMORY BANK # 1 WITH THE MAIN-STREAM MEMORY<<<<<
============================================================================
```

```
  ** MAIN STREAM CONFLUENCE DATA **
  STREAM     RUNOFF     Tc      INTENSITY     AREA
  NUMBER      (CFS)   (MIN.)   (INCH/HOUR)   (ACRE)
      1       20.83     9.43       3.558        7.70
  LONGEST FLOWPATH FROM NODE    270.00 TO NODE    287.00 =  1053.00 FEET.

  ** MEMORY BANK #  1 CONFLUENCE DATA **
  STREAM     RUNOFF     Tc      INTENSITY     AREA
  NUMBER      (CFS)   (MIN.)   (INCH/HOUR)   (ACRE)
      1       45.61    11.45       3.291       16.20
  LONGEST FLOWPATH FROM NODE    200.00 TO NODE    287.00 =  2435.00 FEET.

  ** PEAK FLOW RATE TABLE **
  STREAM    RUNOFF       Tc      INTENSITY
  NUMBER     (CFS)     (MIN.)   (INCH/HOUR)
      1      63.01       9.43        3.558
      2      64.87      11.45        3.291

  COMPUTED CONFLUENCE ESTIMATES ARE AS FOLLOWS:
  PEAK FLOW RATE(CFS) =     64.87   Tc(MIN.) =   11.45
  TOTAL AREA(ACRES) =     23.90

****************************************************************************
  FLOW PROCESS FROM NODE    287.00 TO NODE    287.00 IS CODE =  12
----------------------------------------------------------------------------
  >>>>>CLEAR MEMORY BANK # 1 <<<<<
============================================================================

****************************************************************************
  FLOW PROCESS FROM NODE    287.00 TO NODE    287.00 IS CODE =   1
----------------------------------------------------------------------------
  >>>>>DESIGNATE INDEPENDENT STREAM FOR CONFLUENCE<<<<<
============================================================================
  TOTAL NUMBER OF STREAMS =  2
  CONFLUENCE VALUES USED FOR INDEPENDENT STREAM  1 ARE:
  TIME OF CONCENTRATION(MIN.) =  11.45
  RAINFALL INTENSITY(INCH/HR) =   3.29
  TOTAL STREAM AREA(ACRES) =    23.90
  PEAK FLOW RATE(CFS) AT CONFLUENCE =     64.87

****************************************************************************
  FLOW PROCESS FROM NODE    282.00 TO NODE    283.00 IS CODE =  21
----------------------------------------------------------------------------
  >>>>>RATIONAL METHOD INITIAL SUBAREA ANALYSIS<<<<<
============================================================================
  *USER SPECIFIED(SUBAREA):
  COMMERCIAL DEVELOPMENT RUNOFF COEFFICIENT = .4500
  S.C.S. CURVE NUMBER (AMC II) =   0
  INITIAL SUBAREA FLOW-LENGTH(FEET) =    74.00
  UPSTREAM ELEVATION(FEET) =    492.00
```

```
  DOWNSTREAM ELEVATION(FEET) =    491.00
  ELEVATION DIFFERENCE(FEET) =      1.00
  URBAN SUBAREA OVERLAND TIME OF FLOW(MIN.) =    9.104
   100 YEAR RAINFALL INTENSITY(INCH/HOUR) =  3.620
  SUBAREA RUNOFF(CFS) =      0.16
  TOTAL AREA(ACRES) =      0.10   TOTAL RUNOFF(CFS) =      0.16

****************************************************************************
  FLOW PROCESS FROM NODE    283.00 TO NODE    284.00 IS CODE =  51
----------------------------------------------------------------------------
  >>>>>COMPUTE TRAPEZOIDAL CHANNEL FLOW<<<<<
  >>>>>TRAVELTIME THRU SUBAREA (EXISTING ELEMENT)<<<<<
============================================================================
  ELEVATION DATA: UPSTREAM(FEET) =    491.00  DOWNSTREAM(FEET) =    485.00
  CHANNEL LENGTH THRU SUBAREA(FEET) =  1195.00   CHANNEL SLOPE =  0.0050
  CHANNEL BASE(FEET) =    5.00   "Z" FACTOR =  10.000
  MANNING'S FACTOR = 0.015   MAXIMUM DEPTH(FEET) =  10.00
   100 YEAR RAINFALL INTENSITY(INCH/HOUR) =  2.787
  *USER SPECIFIED(SUBAREA):
  COMMERCIAL DEVELOPMENT RUNOFF COEFFICIENT = .4500
  S.C.S. CURVE NUMBER (AMC II) =   0
  TRAVEL TIME COMPUTED USING ESTIMATED FLOW(CFS) =      7.98
  TRAVEL TIME THRU SUBAREA BASED ON VELOCITY(FEET/SEC.) =   2.72
  AVERAGE FLOW DEPTH(FEET) =   0.35   TRAVEL TIME(MIN.) =   7.31
  Tc(MIN.) =  16.41
  SUBAREA AREA(ACRES) =    12.30       SUBAREA RUNOFF(CFS) =   15.43
  TOTAL AREA(ACRES) =     12.40         PEAK FLOW RATE(CFS) =      15.59

  END OF SUBAREA CHANNEL FLOW HYDRAULICS:
  DEPTH(FEET) =  0.48   FLOW VELOCITY(FEET/SEC.) =   3.28
  LONGEST FLOWPATH FROM NODE    282.00 TO NODE    284.00 =  1269.00 FEET.

****************************************************************************
  FLOW PROCESS FROM NODE    284.00 TO NODE    284.00 IS CODE =  81
----------------------------------------------------------------------------
  >>>>>ADDITION OF SUBAREA TO MAINLINE PEAK FLOW<<<<<
============================================================================
   100 YEAR RAINFALL INTENSITY(INCH/HOUR) =  2.787
  *USER SPECIFIED(SUBAREA):
  COMMERCIAL DEVELOPMENT RUNOFF COEFFICIENT = .4500
  S.C.S. CURVE NUMBER (AMC II) =   0
  SUBAREA AREA(ACRES) =    7.20   SUBAREA RUNOFF(CFS) =    9.03
  TOTAL AREA(ACRES) =     19.60   TOTAL RUNOFF(CFS) =   24.62
  TC(MIN.) =  16.41

****************************************************************************
  FLOW PROCESS FROM NODE    284.00 TO NODE    285.00 IS CODE =  51
----------------------------------------------------------------------------
  >>>>>COMPUTE TRAPEZOIDAL CHANNEL FLOW<<<<<
  >>>>>TRAVELTIME THRU SUBAREA (EXISTING ELEMENT)<<<<<
```

```
============================================================================
  ELEVATION DATA: UPSTREAM(FEET) =    485.00  DOWNSTREAM(FEET) =    480.00
  CHANNEL LENGTH THRU SUBAREA(FEET) =   671.00   CHANNEL SLOPE =  0.0075
  CHANNEL BASE(FEET) =    3.00   "Z" FACTOR =   3.000
  MANNING'S FACTOR = 0.015   MAXIMUM DEPTH(FEET) =  10.00
   100 YEAR RAINFALL INTENSITY(INCH/HOUR) =  2.636
  *USER SPECIFIED(SUBAREA):
  COMMERCIAL DEVELOPMENT RUNOFF COEFFICIENT = .4500
  S.C.S. CURVE NUMBER (AMC II) =   0
  TRAVEL TIME COMPUTED USING ESTIMATED FLOW(CFS) =     29.06
  TRAVEL TIME THRU SUBAREA BASED ON VELOCITY(FEET/SEC.) =   5.93
  AVERAGE FLOW DEPTH(FEET) =   0.87   TRAVEL TIME(MIN.) =   1.89
  Tc(MIN.) =  18.30
  SUBAREA AREA(ACRES) =     7.50       SUBAREA RUNOFF(CFS) =    8.90
  TOTAL AREA(ACRES) =     27.10         PEAK FLOW RATE(CFS) =      33.51

  END OF SUBAREA CHANNEL FLOW HYDRAULICS:
  DEPTH(FEET) =  0.94   FLOW VELOCITY(FEET/SEC.) =   6.17
  LONGEST FLOWPATH FROM NODE    282.00 TO NODE    285.00 =  1940.00 FEET.

****************************************************************************
  FLOW PROCESS FROM NODE    285.00 TO NODE    285.00 IS CODE =  81
----------------------------------------------------------------------------
  >>>>>ADDITION OF SUBAREA TO MAINLINE PEAK FLOW<<<<<
============================================================================
   100 YEAR RAINFALL INTENSITY(INCH/HOUR) =  2.636
  *USER SPECIFIED(SUBAREA):
  COMMERCIAL DEVELOPMENT RUNOFF COEFFICIENT = .4500
  S.C.S. CURVE NUMBER (AMC II) =   0
  SUBAREA AREA(ACRES) =    9.70   SUBAREA RUNOFF(CFS) =   11.51
  TOTAL AREA(ACRES) =     36.80   TOTAL RUNOFF(CFS) =   45.02
  TC(MIN.) =  18.30

****************************************************************************
  FLOW PROCESS FROM NODE    285.00 TO NODE    287.00 IS CODE =  41
----------------------------------------------------------------------------
  >>>>>COMPUTE PIPE-FLOW TRAVEL TIME THRU SUBAREA<<<<<
  >>>>>USING USER-SPECIFIED PIPESIZE (EXISTING ELEMENT)<<<<<
============================================================================
  ELEVATION DATA: UPSTREAM(FEET) =   474.00  DOWNSTREAM(FEET) =   470.00
  FLOW LENGTH(FEET) =   590.00   MANNING'S N =  0.013
  DEPTH OF FLOW IN  42.0 INCH PIPE IS  22.8 INCHES
  PIPE-FLOW VELOCITY(FEET/SEC.) =   8.46
  GIVEN PIPE DIAMETER(INCH) =  42.00    NUMBER OF PIPES =   1
  PIPE-FLOW(CFS) =     45.02
  PIPE TRAVEL TIME(MIN.) =   1.16    Tc(MIN.) =  19.46
  LONGEST FLOWPATH FROM NODE    282.00 TO NODE    287.00 =  2530.00 FEET.

****************************************************************************
  FLOW PROCESS FROM NODE    287.00 TO NODE    287.00 IS CODE =   1
```

```
----------------------------------------------------------------------------
  >>>>>DESIGNATE INDEPENDENT STREAM FOR CONFLUENCE<<<<<
  >>>>>AND COMPUTE VARIOUS CONFLUENCED STREAM VALUES<<<<<
============================================================================
  TOTAL NUMBER OF STREAMS =  2
  CONFLUENCE VALUES USED FOR INDEPENDENT STREAM  2 ARE:
  TIME OF CONCENTRATION(MIN.) =  19.46
  RAINFALL INTENSITY(INCH/HR) =   2.54
  TOTAL STREAM AREA(ACRES) =    36.80
  PEAK FLOW RATE(CFS) AT CONFLUENCE =     45.02

  ** CONFLUENCE DATA **
  STREAM     RUNOFF      Tc      INTENSITY      AREA
  NUMBER      (CFS)    (MIN.)   (INCH/HOUR)    (ACRE)
      1       64.87    11.45        3.291         23.90
      2       45.02    19.46        2.543         36.80

  RAINFALL INTENSITY AND TIME OF CONCENTRATION RATIO
  CONFLUENCE FORMULA USED FOR  2 STREAMS.

  ** PEAK FLOW RATE TABLE **
  STREAM     RUNOFF      Tc      INTENSITY
  NUMBER      (CFS)    (MIN.)   (INCH/HOUR)
      1       99.66    11.45       3.291
      2       95.15    19.46       2.543

  COMPUTED CONFLUENCE ESTIMATES ARE AS FOLLOWS:
  PEAK FLOW RATE(CFS) =     99.66   Tc(MIN.) =   11.45
  TOTAL AREA(ACRES) =     60.70
  LONGEST FLOWPATH FROM NODE    282.00 TO NODE    287.00 =  2530.00 FEET.

****************************************************************************
  FLOW PROCESS FROM NODE    287.00 TO NODE    290.00 IS CODE =  41
----------------------------------------------------------------------------
  >>>>>COMPUTE PIPE-FLOW TRAVEL TIME THRU SUBAREA<<<<<
  >>>>>USING USER-SPECIFIED PIPESIZE (EXISTING ELEMENT)<<<<<
============================================================================
  ELEVATION DATA: UPSTREAM(FEET) =   470.00  DOWNSTREAM(FEET) =   390.00
  FLOW LENGTH(FEET) =   160.00   MANNING'S N =  0.013
  DEPTH OF FLOW IN  54.0 INCH PIPE IS  10.0 INCHES
  PIPE-FLOW VELOCITY(FEET/SEC.) =  48.88
  GIVEN PIPE DIAMETER(INCH) =  54.00    NUMBER OF PIPES =   1
  PIPE-FLOW(CFS) =     99.66
  PIPE TRAVEL TIME(MIN.) =   0.05    Tc(MIN.) =  11.50
  LONGEST FLOWPATH FROM NODE    282.00 TO NODE    290.00 =  2690.00 FEET.
============================================================================
  END OF STUDY SUMMARY:
  TOTAL AREA(ACRES)     =     60.70  TC(MIN.) =     11.50
  PEAK FLOW RATE(CFS)   =     99.66
============================================================================
```

```
============================================================================
  END OF RATIONAL METHOD ANALYSIS
```

```
****************************************************************************

            RATIONAL METHOD HYDROLOGY COMPUTER PROGRAM PACKAGE
            Reference: SAN DIEGO COUNTY FLOOD CONTROL DISTRICT
                         2003,1985,1981 HYDROLOGY MANUAL
         (c) Copyright 1982-2014 Advanced Engineering Software (aes)
             Ver. 21.0 Release Date: 06/01/2014  License ID 1261

                           Analysis prepared by:

                          RICK ENGINEERING COMPANY
                              5620 Friars Road
                         San Diego, California 92110
                       619-291-0707   Fax 619-291-4165

 ************************** DESCRIPTION OF STUDY **************************
 * J-15013C SOUTHWEST VILLAGE                                               *
 * 100-YEAR, 6-HOUR STORM EVENT                                             *
 * BASIN 300 POST-PROJECT                                                   *
 **************************************************************************

  FILE NAME: S103HP00.RAT
  TIME/DATE OF STUDY: 15:08 02/15/2022
----------------------------------------------------------------------------
  USER SPECIFIED HYDROLOGY AND HYDRAULIC MODEL INFORMATION:
----------------------------------------------------------------------------
  USER SPECIFIED STORM EVENT(YEAR) = 100.00
  SPECIFIED MINIMUM PIPE SIZE(INCH) =  18.00
  SPECIFIED PERCENT OF GRADIENTS(DECIMAL) TO USE FOR FRICTION SLOPE = 0.90
  RAINFALL-INTENSITY ADJUSTMENT FACTOR = 1.000
  *USER SPECIFIED:
  NUMBER OF [TIME,INTENSITY] DATA PAIRS =  9
   1)   5.000;  4.400
   2)  10.000;  3.450
   3)  15.000;  2.900
   4)  20.000;  2.500
   5)  25.000;  2.200
   6)  30.000;  2.000
   7)  40.000;  1.700
   8)  50.000;  1.500
   9)  60.000;  1.300
  SAN DIEGO HYDROLOGY MANUAL "C"-VALUES USED FOR RATIONAL METHOD
  NOTE: ONLY PEAK CONFLUENCE VALUES CONSIDERED
  *USER-DEFINED STREET-SECTIONS FOR COUPLED PIPEFLOW AND STREETFLOW MODEL*
     HALF-  CROWN TO   STREET-CROSSFALL:   CURB  GUTTER-GEOMETRIES:  MANNING
     WIDTH  CROSSFALL  IN-  / OUT-/PARK-  HEIGHT  WIDTH  LIP   HIKE  FACTOR
NO.   (FT)     (FT)    SIDE / SIDE/ WAY    (FT)    (FT)  (FT)  (FT)    (n)
===  =====  =========  ================  ======  ===== ====== ===== =======
  1   30.0     20.0    0.018/0.018/0.020   0.67    2.00 0.0313 0.167 0.0150
  2   20.0     15.0    0.020/0.020/0.020   0.50    1.50 0.0100 0.125 0.0160

  GLOBAL STREET FLOW-DEPTH CONSTRAINTS:
    1. Relative Flow-Depth = -0.10 FEET
       as (Maximum Allowable Street Flow Depth) - (Top-of-Curb)
    2. (Depth)*(Velocity) Constraint =  6.0 (FT*FT/S)
  *SIZE PIPE WITH A FLOW CAPACITY GREATER THAN
   OR EQUAL TO THE UPSTREAM TRIBUTARY PIPE.*
```

```
****************************************************************************
  FLOW PROCESS FROM NODE    300.00 TO NODE    302.00 IS CODE =  22
----------------------------------------------------------------------------
  >>>>>RATIONAL METHOD INITIAL SUBAREA ANALYSIS<<<<<
============================================================================
  *USER SPECIFIED(SUBAREA):
  RESIDENTIAL (7.3 DU/AC OR LESS) RUNOFF COEFFICIENT = .7800
  S.C.S. CURVE NUMBER (AMC II) =   0
  USER SPECIFIED Tc(MIN.) =    5.000
   100 YEAR RAINFALL INTENSITY(INCH/HOUR) =  4.400
  SUBAREA RUNOFF(CFS) =      0.34
  TOTAL AREA(ACRES) =      0.10   TOTAL RUNOFF(CFS) =      0.34

****************************************************************************
  FLOW PROCESS FROM NODE    302.00 TO NODE    304.00 IS CODE =  62
----------------------------------------------------------------------------
  >>>>>COMPUTE STREET FLOW TRAVEL TIME THRU SUBAREA<<<<<
  >>>>>(STREET TABLE SECTION #  2 USED)<<<<<
============================================================================
  UPSTREAM ELEVATION(FEET) =  100.00  DOWNSTREAM ELEVATION(FEET) =   96.14
  STREET LENGTH(FEET) =   193.00   CURB HEIGHT(INCHES) =  6.0
  STREET HALFWIDTH(FEET) = 20.00

  DISTANCE FROM CROWN TO CROSSFALL GRADEBREAK(FEET) =  15.00
  INSIDE STREET CROSSFALL(DECIMAL) =  0.020
  OUTSIDE STREET CROSSFALL(DECIMAL)  =  0.020

  SPECIFIED NUMBER OF HALFSTREETS CARRYING RUNOFF =  2
  STREET PARKWAY CROSSFALL(DECIMAL)  =  0.020
  Manning's FRICTION FACTOR for Streetflow Section(curb-to-curb) =   0.0160
  Manning's FRICTION FACTOR for Back-of-Walk Flow Section =   0.0200

    **TRAVEL TIME COMPUTED USING ESTIMATED FLOW(CFS) =       5.40
    STREETFLOW MODEL RESULTS USING ESTIMATED FLOW:
    STREET FLOW DEPTH(FEET) =  0.29
    HALFSTREET FLOOD WIDTH(FEET) =    9.37
    AVERAGE FLOW VELOCITY(FEET/SEC.) =    2.80
    PRODUCT OF DEPTH&VELOCITY(FT*FT/SEC.) =    0.82
  STREET FLOW TRAVEL TIME(MIN.) =   1.15   Tc(MIN.) =    6.15
   100 YEAR RAINFALL INTENSITY(INCH/HOUR) =  4.182
  *USER SPECIFIED(SUBAREA):
  RESIDENTIAL (7.3 DU/AC OR LESS) RUNOFF COEFFICIENT = .7800
  S.C.S. CURVE NUMBER (AMC II) =   0
  AREA-AVERAGE RUNOFF COEFFICIENT =  0.780
  SUBAREA AREA(ACRES) =     3.10      SUBAREA RUNOFF(CFS) =   10.11
  TOTAL AREA(ACRES) =        3.2        PEAK FLOW RATE(CFS) =      10.44

  END OF SUBAREA STREET FLOW HYDRAULICS:
  DEPTH(FEET) = 0.35   HALFSTREET FLOOD WIDTH(FEET) =  12.24
  FLOW VELOCITY(FEET/SEC.) =  3.30   DEPTH*VELOCITY(FT*FT/SEC.) =   1.15
  LONGEST FLOWPATH FROM NODE    300.00 TO NODE    304.00 =     193.00 FEET.

****************************************************************************
  FLOW PROCESS FROM NODE    304.00 TO NODE    306.00 IS CODE =  31
----------------------------------------------------------------------------
  >>>>>COMPUTE PIPE-FLOW TRAVEL TIME THRU SUBAREA<<<<<
  >>>>>USING COMPUTER-ESTIMATED PIPESIZE (NON-PRESSURE FLOW)<<<<<
```

```
============================================================================
  ELEVATION DATA: UPSTREAM(FEET) =   100.00  DOWNSTREAM(FEET) =    99.55
  FLOW LENGTH(FEET) =    45.00   MANNING'S N =  0.013
  DEPTH OF FLOW IN  21.0 INCH PIPE IS  12.9 INCHES
  PIPE-FLOW VELOCITY(FEET/SEC.) =   6.76
  ESTIMATED PIPE DIAMETER(INCH) =  21.00    NUMBER OF PIPES =   1
  PIPE-FLOW(CFS) =      10.44
  PIPE TRAVEL TIME(MIN.) =   0.11    Tc(MIN.) =    6.26
  LONGEST FLOWPATH FROM NODE    300.00 TO NODE    306.00 =     238.00 FEET.

****************************************************************************
  FLOW PROCESS FROM NODE    306.00 TO NODE    306.00 IS CODE =  81
----------------------------------------------------------------------------
  >>>>>ADDITION OF SUBAREA TO MAINLINE PEAK FLOW<<<<<
============================================================================
   100 YEAR RAINFALL INTENSITY(INCH/HOUR) =  4.161
  *USER SPECIFIED(SUBAREA):
  RESIDENTIAL (43. DU/AC OR LESS) RUNOFF COEFFICIENT = .7800
  S.C.S. CURVE NUMBER (AMC II) =   0
  AREA-AVERAGE RUNOFF COEFFICIENT = 0.7800
  SUBAREA AREA(ACRES) =    0.40   SUBAREA RUNOFF(CFS) =    1.30
  TOTAL AREA(ACRES) =        3.6   TOTAL RUNOFF(CFS) =      11.68
  TC(MIN.) =    6.26

****************************************************************************
  FLOW PROCESS FROM NODE    306.00 TO NODE    308.00 IS CODE =  31
----------------------------------------------------------------------------
  >>>>>COMPUTE PIPE-FLOW TRAVEL TIME THRU SUBAREA<<<<<
  >>>>>USING COMPUTER-ESTIMATED PIPESIZE (NON-PRESSURE FLOW)<<<<<
============================================================================
  ELEVATION DATA: UPSTREAM(FEET) =   100.00  DOWNSTREAM(FEET) =    99.34
  FLOW LENGTH(FEET) =    66.00   MANNING'S N =  0.013
  DEPTH OF FLOW IN  21.0 INCH PIPE IS  13.9 INCHES
  PIPE-FLOW VELOCITY(FEET/SEC.) =   6.93
  ESTIMATED PIPE DIAMETER(INCH) =  21.00    NUMBER OF PIPES =   1
  PIPE-FLOW(CFS) =      11.68
  PIPE TRAVEL TIME(MIN.) =   0.16    Tc(MIN.) =    6.42
  LONGEST FLOWPATH FROM NODE    300.00 TO NODE    308.00 =     304.00 FEET.

****************************************************************************
  FLOW PROCESS FROM NODE    308.00 TO NODE    308.00 IS CODE =  81
----------------------------------------------------------------------------
  >>>>>ADDITION OF SUBAREA TO MAINLINE PEAK FLOW<<<<<
============================================================================
   100 YEAR RAINFALL INTENSITY(INCH/HOUR) =  4.131
  *USER SPECIFIED(SUBAREA):
  RESIDENTIAL (43. DU/AC OR LESS) RUNOFF COEFFICIENT = .7800
  S.C.S. CURVE NUMBER (AMC II) =   0
  AREA-AVERAGE RUNOFF COEFFICIENT = 0.7800
  SUBAREA AREA(ACRES) =    0.50   SUBAREA RUNOFF(CFS) =    1.61
  TOTAL AREA(ACRES) =        4.1   TOTAL RUNOFF(CFS) =      13.21
  TC(MIN.) =    6.42

****************************************************************************
  FLOW PROCESS FROM NODE    308.00 TO NODE    310.00 IS CODE =  31
----------------------------------------------------------------------------
  >>>>>COMPUTE PIPE-FLOW TRAVEL TIME THRU SUBAREA<<<<<
  >>>>>USING COMPUTER-ESTIMATED PIPESIZE (NON-PRESSURE FLOW)<<<<<
```

```
============================================================================
  ELEVATION DATA: UPSTREAM(FEET) =   100.00  DOWNSTREAM(FEET) =    98.99
  FLOW LENGTH(FEET) =   101.00   MANNING'S N =  0.013
  DEPTH OF FLOW IN  21.0 INCH PIPE IS  15.2 INCHES
  PIPE-FLOW VELOCITY(FEET/SEC.) =   7.07
  ESTIMATED PIPE DIAMETER(INCH) =  21.00    NUMBER OF PIPES =   1
  PIPE-FLOW(CFS) =      13.21
  PIPE TRAVEL TIME(MIN.) =   0.24    Tc(MIN.) =    6.65
  LONGEST FLOWPATH FROM NODE    300.00 TO NODE    310.00 =     405.00 FEET.

****************************************************************************
  FLOW PROCESS FROM NODE    310.00 TO NODE    310.00 IS CODE =  81
----------------------------------------------------------------------------
  >>>>>ADDITION OF SUBAREA TO MAINLINE PEAK FLOW<<<<<
============================================================================
   100 YEAR RAINFALL INTENSITY(INCH/HOUR) =  4.086
  *USER SPECIFIED(SUBAREA):
  RESIDENTIAL (43. DU/AC OR LESS) RUNOFF COEFFICIENT = .7800
  S.C.S. CURVE NUMBER (AMC II) =   0
  AREA-AVERAGE RUNOFF COEFFICIENT = 0.7800
  SUBAREA AREA(ACRES) =    0.50   SUBAREA RUNOFF(CFS) =    1.59
  TOTAL AREA(ACRES) =        4.6   TOTAL RUNOFF(CFS) =      14.66
  TC(MIN.) =    6.65

****************************************************************************
  FLOW PROCESS FROM NODE    310.00 TO NODE    312.00 IS CODE =  31
----------------------------------------------------------------------------
  >>>>>COMPUTE PIPE-FLOW TRAVEL TIME THRU SUBAREA<<<<<
  >>>>>USING COMPUTER-ESTIMATED PIPESIZE (NON-PRESSURE FLOW)<<<<<
============================================================================
  ELEVATION DATA: UPSTREAM(FEET) =   100.00  DOWNSTREAM(FEET) =    99.55
  FLOW LENGTH(FEET) =    45.00   MANNING'S N =  0.013
  DEPTH OF FLOW IN  21.0 INCH PIPE IS  16.7 INCHES
  PIPE-FLOW VELOCITY(FEET/SEC.) =   7.15
  ESTIMATED PIPE DIAMETER(INCH) =  21.00    NUMBER OF PIPES =   1
  PIPE-FLOW(CFS) =      14.66
  PIPE TRAVEL TIME(MIN.) =   0.10    Tc(MIN.) =    6.76
  LONGEST FLOWPATH FROM NODE    300.00 TO NODE    312.00 =     450.00 FEET.

****************************************************************************
  FLOW PROCESS FROM NODE    312.00 TO NODE    312.00 IS CODE =  81
----------------------------------------------------------------------------
  >>>>>ADDITION OF SUBAREA TO MAINLINE PEAK FLOW<<<<<
============================================================================
   100 YEAR RAINFALL INTENSITY(INCH/HOUR) =  4.066
  *USER SPECIFIED(SUBAREA):
  RESIDENTIAL (43. DU/AC OR LESS) RUNOFF COEFFICIENT = .7800
  S.C.S. CURVE NUMBER (AMC II) =   0
  AREA-AVERAGE RUNOFF COEFFICIENT = 0.7800
  SUBAREA AREA(ACRES) =    0.50   SUBAREA RUNOFF(CFS) =    1.59
  TOTAL AREA(ACRES) =        5.1   TOTAL RUNOFF(CFS) =      16.17
  TC(MIN.) =    6.76

****************************************************************************
  FLOW PROCESS FROM NODE    312.00 TO NODE    319.00 IS CODE =  31
----------------------------------------------------------------------------
  >>>>>COMPUTE PIPE-FLOW TRAVEL TIME THRU SUBAREA<<<<<
  >>>>>USING COMPUTER-ESTIMATED PIPESIZE (NON-PRESSURE FLOW)<<<<<
```

```
============================================================================
  ELEVATION DATA: UPSTREAM(FEET) =   100.00  DOWNSTREAM(FEET) =    99.39
  FLOW LENGTH(FEET) =    61.00   MANNING'S N =  0.013
  DEPTH OF FLOW IN  24.0 INCH PIPE IS  15.5 INCHES
  PIPE-FLOW VELOCITY(FEET/SEC.) =   7.53
  ESTIMATED PIPE DIAMETER(INCH) =  24.00    NUMBER OF PIPES =   1
  PIPE-FLOW(CFS) =      16.17
  PIPE TRAVEL TIME(MIN.) =   0.14    Tc(MIN.) =    6.89
  LONGEST FLOWPATH FROM NODE    300.00 TO NODE    319.00 =     511.00 FEET.

****************************************************************************
  FLOW PROCESS FROM NODE    319.00 TO NODE    319.00 IS CODE =  81
----------------------------------------------------------------------------
  >>>>>ADDITION OF SUBAREA TO MAINLINE PEAK FLOW<<<<<
============================================================================
   100 YEAR RAINFALL INTENSITY(INCH/HOUR) =  4.040
  *USER SPECIFIED(SUBAREA):
  RESIDENTIAL (43. DU/AC OR LESS) RUNOFF COEFFICIENT = .7800
  S.C.S. CURVE NUMBER (AMC II) =   0
  AREA-AVERAGE RUNOFF COEFFICIENT = 0.7800
  SUBAREA AREA(ACRES) =    2.10   SUBAREA RUNOFF(CFS) =    6.62
  TOTAL AREA(ACRES) =        7.2   TOTAL RUNOFF(CFS) =      22.69
  TC(MIN.) =    6.89

****************************************************************************
  FLOW PROCESS FROM NODE    319.00 TO NODE    323.00 IS CODE =  31
----------------------------------------------------------------------------
  >>>>>COMPUTE PIPE-FLOW TRAVEL TIME THRU SUBAREA<<<<<
  >>>>>USING COMPUTER-ESTIMATED PIPESIZE (NON-PRESSURE FLOW)<<<<<
============================================================================
  ELEVATION DATA: UPSTREAM(FEET) =   100.00  DOWNSTREAM(FEET) =    92.47
  FLOW LENGTH(FEET) =   753.00   MANNING'S N =  0.013
  DEPTH OF FLOW IN  27.0 INCH PIPE IS  17.8 INCHES
  PIPE-FLOW VELOCITY(FEET/SEC.) =   8.18
  ESTIMATED PIPE DIAMETER(INCH) =  27.00    NUMBER OF PIPES =   1
  PIPE-FLOW(CFS) =      22.69
  PIPE TRAVEL TIME(MIN.) =   1.53    Tc(MIN.) =    8.43
  LONGEST FLOWPATH FROM NODE    300.00 TO NODE    323.00 =    1264.00 FEET.

****************************************************************************
  FLOW PROCESS FROM NODE    323.00 TO NODE    323.00 IS CODE =  81
----------------------------------------------------------------------------
  >>>>>ADDITION OF SUBAREA TO MAINLINE PEAK FLOW<<<<<
============================================================================
   100 YEAR RAINFALL INTENSITY(INCH/HOUR) =  3.748
  *USER SPECIFIED(SUBAREA):
  RESIDENTIAL (43. DU/AC OR LESS) RUNOFF COEFFICIENT = .7800
  S.C.S. CURVE NUMBER (AMC II) =   0
  AREA-AVERAGE RUNOFF COEFFICIENT = 0.7800
  SUBAREA AREA(ACRES) =    2.20   SUBAREA RUNOFF(CFS) =    6.43
  TOTAL AREA(ACRES) =        9.4   TOTAL RUNOFF(CFS) =      27.48
  TC(MIN.) =    8.43

****************************************************************************
  FLOW PROCESS FROM NODE    323.00 TO NODE    331.00 IS CODE =  31
----------------------------------------------------------------------------
  >>>>>COMPUTE PIPE-FLOW TRAVEL TIME THRU SUBAREA<<<<<
  >>>>>USING COMPUTER-ESTIMATED PIPESIZE (NON-PRESSURE FLOW)<<<<<
```

```
============================================================================
  ELEVATION DATA: UPSTREAM(FEET) =   100.00  DOWNSTREAM(FEET) =    98.92
  FLOW LENGTH(FEET) =   108.00   MANNING'S N =  0.013
  DEPTH OF FLOW IN  27.0 INCH PIPE IS  20.6 INCHES
  PIPE-FLOW VELOCITY(FEET/SEC.) =   8.43
  ESTIMATED PIPE DIAMETER(INCH) =  27.00    NUMBER OF PIPES =   1
  PIPE-FLOW(CFS) =      27.48
  PIPE TRAVEL TIME(MIN.) =   0.21    Tc(MIN.) =    8.64
  LONGEST FLOWPATH FROM NODE    300.00 TO NODE    331.00 =    1372.00 FEET.

****************************************************************************
  FLOW PROCESS FROM NODE    331.00 TO NODE    331.00 IS CODE =  81
----------------------------------------------------------------------------
  >>>>>ADDITION OF SUBAREA TO MAINLINE PEAK FLOW<<<<<
============================================================================
   100 YEAR RAINFALL INTENSITY(INCH/HOUR) =  3.708
  *USER SPECIFIED(SUBAREA):
  RESIDENTIAL (43. DU/AC OR LESS) RUNOFF COEFFICIENT = .7800
  S.C.S. CURVE NUMBER (AMC II) =   0
  AREA-AVERAGE RUNOFF COEFFICIENT = 0.7800
  SUBAREA AREA(ACRES) =    4.30   SUBAREA RUNOFF(CFS) =   12.44
  TOTAL AREA(ACRES) =       13.7   TOTAL RUNOFF(CFS) =      39.62
  TC(MIN.) =    8.64

****************************************************************************
  FLOW PROCESS FROM NODE    331.00 TO NODE    332.00 IS CODE =  31
----------------------------------------------------------------------------
  >>>>>COMPUTE PIPE-FLOW TRAVEL TIME THRU SUBAREA<<<<<
  >>>>>USING COMPUTER-ESTIMATED PIPESIZE (NON-PRESSURE FLOW)<<<<<
============================================================================
  ELEVATION DATA: UPSTREAM(FEET) =   100.00  DOWNSTREAM(FEET) =    99.61
  FLOW LENGTH(FEET) =    39.00   MANNING'S N =  0.013
  DEPTH OF FLOW IN  33.0 INCH PIPE IS  22.1 INCHES
  PIPE-FLOW VELOCITY(FEET/SEC.) =   9.39
  ESTIMATED PIPE DIAMETER(INCH) =  33.00    NUMBER OF PIPES =   1
  PIPE-FLOW(CFS) =      39.62
  PIPE TRAVEL TIME(MIN.) =   0.07    Tc(MIN.) =    8.71
  LONGEST FLOWPATH FROM NODE    300.00 TO NODE    332.00 =    1411.00 FEET.

****************************************************************************
  FLOW PROCESS FROM NODE    332.00 TO NODE    332.00 IS CODE =  81
----------------------------------------------------------------------------
  >>>>>ADDITION OF SUBAREA TO MAINLINE PEAK FLOW<<<<<
============================================================================
   100 YEAR RAINFALL INTENSITY(INCH/HOUR) =  3.695
  *USER SPECIFIED(SUBAREA):
  RESIDENTIAL (43. DU/AC OR LESS) RUNOFF COEFFICIENT = .7800
  S.C.S. CURVE NUMBER (AMC II) =   0
  AREA-AVERAGE RUNOFF COEFFICIENT = 0.7800
  SUBAREA AREA(ACRES) =    1.10   SUBAREA RUNOFF(CFS) =    3.17
  TOTAL AREA(ACRES) =       14.8   TOTAL RUNOFF(CFS) =      42.65
  TC(MIN.) =    8.71

****************************************************************************
  FLOW PROCESS FROM NODE    332.00 TO NODE    337.00 IS CODE =  31
----------------------------------------------------------------------------
  >>>>>COMPUTE PIPE-FLOW TRAVEL TIME THRU SUBAREA<<<<<
  >>>>>USING COMPUTER-ESTIMATED PIPESIZE (NON-PRESSURE FLOW)<<<<<
```

```
============================================================================
  ELEVATION DATA: UPSTREAM(FEET) =   100.00  DOWNSTREAM(FEET) =    98.95
  FLOW LENGTH(FEET) =   105.00   MANNING'S N =  0.013
  DEPTH OF FLOW IN  33.0 INCH PIPE IS  23.3 INCHES
  PIPE-FLOW VELOCITY(FEET/SEC.) =   9.51
  ESTIMATED PIPE DIAMETER(INCH) =  33.00    NUMBER OF PIPES =   1
  PIPE-FLOW(CFS) =      42.65
  PIPE TRAVEL TIME(MIN.) =   0.18    Tc(MIN.) =    8.90
  LONGEST FLOWPATH FROM NODE    300.00 TO NODE    337.00 =    1516.00 FEET.

****************************************************************************
  FLOW PROCESS FROM NODE    337.00 TO NODE    337.00 IS CODE =  81
----------------------------------------------------------------------------
  >>>>>ADDITION OF SUBAREA TO MAINLINE PEAK FLOW<<<<<
============================================================================
   100 YEAR RAINFALL INTENSITY(INCH/HOUR) =  3.660
  *USER SPECIFIED(SUBAREA):
  RESIDENTIAL (43. DU/AC OR LESS) RUNOFF COEFFICIENT = .7800
  S.C.S. CURVE NUMBER (AMC II) =   0
  AREA-AVERAGE RUNOFF COEFFICIENT = 0.7800
  SUBAREA AREA(ACRES) =    2.70   SUBAREA RUNOFF(CFS) =    7.71
  TOTAL AREA(ACRES) =       17.5   TOTAL RUNOFF(CFS) =      49.95
  TC(MIN.) =    8.90

****************************************************************************
  FLOW PROCESS FROM NODE    337.00 TO NODE    351.10 IS CODE =  31
----------------------------------------------------------------------------
  >>>>>COMPUTE PIPE-FLOW TRAVEL TIME THRU SUBAREA<<<<<
  >>>>>USING COMPUTER-ESTIMATED PIPESIZE (NON-PRESSURE FLOW)<<<<<
============================================================================
  ELEVATION DATA: UPSTREAM(FEET) =   100.00  DOWNSTREAM(FEET) =    92.86
  FLOW LENGTH(FEET) =   714.00   MANNING'S N =  0.013
  DEPTH OF FLOW IN  33.0 INCH PIPE IS  26.8 INCHES
  PIPE-FLOW VELOCITY(FEET/SEC.) =   9.66
  ESTIMATED PIPE DIAMETER(INCH) =  33.00    NUMBER OF PIPES =   1
  PIPE-FLOW(CFS) =      49.95
  PIPE TRAVEL TIME(MIN.) =   1.23    Tc(MIN.) =   10.13
  LONGEST FLOWPATH FROM NODE    300.00 TO NODE    351.10 =    2230.00 FEET.

****************************************************************************
  FLOW PROCESS FROM NODE    351.10 TO NODE    351.10 IS CODE =   1
----------------------------------------------------------------------------
  >>>>>DESIGNATE INDEPENDENT STREAM FOR CONFLUENCE<<<<<
============================================================================
  TOTAL NUMBER OF STREAMS =  2
  CONFLUENCE VALUES USED FOR INDEPENDENT STREAM  1 ARE:
  TIME OF CONCENTRATION(MIN.) =   10.13
  RAINFALL INTENSITY(INCH/HR) =   3.44
  TOTAL STREAM AREA(ACRES) =    17.50
  PEAK FLOW RATE(CFS) AT CONFLUENCE =     49.95

****************************************************************************
  FLOW PROCESS FROM NODE    339.10 TO NODE    339.20 IS CODE =  22
----------------------------------------------------------------------------
  >>>>>RATIONAL METHOD INITIAL SUBAREA ANALYSIS<<<<<
============================================================================
  *USER SPECIFIED(SUBAREA):
  RESIDENTIAL (1. DU/AC OR LESS) RUNOFF COEFFICIENT = .8300
```

```
  S.C.S. CURVE NUMBER (AMC II) =   0
  USER SPECIFIED Tc(MIN.) =    5.000
   100 YEAR RAINFALL INTENSITY(INCH/HOUR) =  4.400
  SUBAREA RUNOFF(CFS) =      0.37
  TOTAL AREA(ACRES) =      0.10   TOTAL RUNOFF(CFS) =      0.37

****************************************************************************
  FLOW PROCESS FROM NODE    339.20 TO NODE    340.00 IS CODE =  62
----------------------------------------------------------------------------
  >>>>>COMPUTE STREET FLOW TRAVEL TIME THRU SUBAREA<<<<<
  >>>>>(STREET TABLE SECTION #  2 USED)<<<<<
============================================================================
  UPSTREAM ELEVATION(FEET) =  100.00  DOWNSTREAM ELEVATION(FEET) =   95.64
  STREET LENGTH(FEET) =   218.00   CURB HEIGHT(INCHES) =  6.0
  STREET HALFWIDTH(FEET) = 20.00

  DISTANCE FROM CROWN TO CROSSFALL GRADEBREAK(FEET) =  15.00
  INSIDE STREET CROSSFALL(DECIMAL) =  0.020
  OUTSIDE STREET CROSSFALL(DECIMAL)  =  0.020

  SPECIFIED NUMBER OF HALFSTREETS CARRYING RUNOFF =  1
  STREET PARKWAY CROSSFALL(DECIMAL)  =  0.020
  Manning's FRICTION FACTOR for Streetflow Section(curb-to-curb) =   0.0160
  Manning's FRICTION FACTOR for Back-of-Walk Flow Section =   0.0200

    **TRAVEL TIME COMPUTED USING ESTIMATED FLOW(CFS) =       2.26
    STREETFLOW MODEL RESULTS USING ESTIMATED FLOW:
    STREET FLOW DEPTH(FEET) =  0.28
    HALFSTREET FLOOD WIDTH(FEET) =    8.66
    AVERAGE FLOW VELOCITY(FEET/SEC.) =    2.70
    PRODUCT OF DEPTH&VELOCITY(FT*FT/SEC.) =    0.75
  STREET FLOW TRAVEL TIME(MIN.) =   1.35   Tc(MIN.) =    6.35
   100 YEAR RAINFALL INTENSITY(INCH/HOUR) =  4.144
  *USER SPECIFIED(SUBAREA):
  RESIDENTIAL (43. DU/AC OR LESS) RUNOFF COEFFICIENT = .8300
  S.C.S. CURVE NUMBER (AMC II) =   0
  AREA-AVERAGE RUNOFF COEFFICIENT =  0.830
  SUBAREA AREA(ACRES) =    1.10      SUBAREA RUNOFF(CFS) =    3.78
  TOTAL AREA(ACRES) =        1.2        PEAK FLOW RATE(CFS) =       4.13

  END OF SUBAREA STREET FLOW HYDRAULICS:
  DEPTH(FEET) = 0.33   HALFSTREET FLOOD WIDTH(FEET) =  11.12
  FLOW VELOCITY(FEET/SEC.) =  3.12   DEPTH*VELOCITY(FT*FT/SEC.) =   1.02
  LONGEST FLOWPATH FROM NODE    339.10 TO NODE    340.00 =     308.00 FEET.

****************************************************************************
  FLOW PROCESS FROM NODE    340.00 TO NODE    342.00 IS CODE =  31
----------------------------------------------------------------------------
  >>>>>COMPUTE PIPE-FLOW TRAVEL TIME THRU SUBAREA<<<<<
  >>>>>USING COMPUTER-ESTIMATED PIPESIZE (NON-PRESSURE FLOW)<<<<<
============================================================================
  ELEVATION DATA: UPSTREAM(FEET) =   100.00  DOWNSTREAM(FEET) =    98.37
  FLOW LENGTH(FEET) =   163.00   MANNING'S N =  0.013
  ESTIMATED PIPE DIAMETER(INCH) INCREASED TO 18.000
  DEPTH OF FLOW IN  18.0 INCH PIPE IS   8.1 INCHES
  PIPE-FLOW VELOCITY(FEET/SEC.) =   5.39
  ESTIMATED PIPE DIAMETER(INCH) =  18.00    NUMBER OF PIPES =   1
  PIPE-FLOW(CFS) =       4.13
```

```
  PIPE TRAVEL TIME(MIN.) =   0.50    Tc(MIN.) =    6.85
  LONGEST FLOWPATH FROM NODE    339.10 TO NODE    342.00 =     471.00 FEET.

****************************************************************************
  FLOW PROCESS FROM NODE    342.00 TO NODE    342.00 IS CODE =  81
----------------------------------------------------------------------------
  >>>>>ADDITION OF SUBAREA TO MAINLINE PEAK FLOW<<<<<
============================================================================
   100 YEAR RAINFALL INTENSITY(INCH/HOUR) =  4.048
  *USER SPECIFIED(SUBAREA):
  RESIDENTIAL (43. DU/AC OR LESS) RUNOFF COEFFICIENT = .8300
  S.C.S. CURVE NUMBER (AMC II) =   0
  AREA-AVERAGE RUNOFF COEFFICIENT = 0.8300
  SUBAREA AREA(ACRES) =    1.30   SUBAREA RUNOFF(CFS) =    4.37
  TOTAL AREA(ACRES) =        2.5   TOTAL RUNOFF(CFS) =       8.40
  TC(MIN.) =    6.85

****************************************************************************
  FLOW PROCESS FROM NODE    342.00 TO NODE    344.00 IS CODE =  31
----------------------------------------------------------------------------
  >>>>>COMPUTE PIPE-FLOW TRAVEL TIME THRU SUBAREA<<<<<
  >>>>>USING COMPUTER-ESTIMATED PIPESIZE (NON-PRESSURE FLOW)<<<<<
============================================================================
  ELEVATION DATA: UPSTREAM(FEET) =   100.00  DOWNSTREAM(FEET) =    98.02
  FLOW LENGTH(FEET) =   198.00   MANNING'S N =  0.013
  DEPTH OF FLOW IN  18.0 INCH PIPE IS  12.6 INCHES
  PIPE-FLOW VELOCITY(FEET/SEC.) =   6.34
  ESTIMATED PIPE DIAMETER(INCH) =  18.00    NUMBER OF PIPES =   1
  PIPE-FLOW(CFS) =       8.40
  PIPE TRAVEL TIME(MIN.) =   0.52    Tc(MIN.) =    7.37
  LONGEST FLOWPATH FROM NODE    339.10 TO NODE    344.00 =     669.00 FEET.

****************************************************************************
  FLOW PROCESS FROM NODE    344.00 TO NODE    344.00 IS CODE =  81
----------------------------------------------------------------------------
  >>>>>ADDITION OF SUBAREA TO MAINLINE PEAK FLOW<<<<<
============================================================================
   100 YEAR RAINFALL INTENSITY(INCH/HOUR) =  3.950
  *USER SPECIFIED(SUBAREA):
  RESIDENTIAL (43. DU/AC OR LESS) RUNOFF COEFFICIENT = .8300
  S.C.S. CURVE NUMBER (AMC II) =   0
  AREA-AVERAGE RUNOFF COEFFICIENT = 0.8300
  SUBAREA AREA(ACRES) =    1.10   SUBAREA RUNOFF(CFS) =    3.61
  TOTAL AREA(ACRES) =        3.6   TOTAL RUNOFF(CFS) =      11.80
  TC(MIN.) =    7.37

****************************************************************************
  FLOW PROCESS FROM NODE    344.00 TO NODE    346.00 IS CODE =  31
----------------------------------------------------------------------------
  >>>>>COMPUTE PIPE-FLOW TRAVEL TIME THRU SUBAREA<<<<<
  >>>>>USING COMPUTER-ESTIMATED PIPESIZE (NON-PRESSURE FLOW)<<<<<
============================================================================
  ELEVATION DATA: UPSTREAM(FEET) =   100.00  DOWNSTREAM(FEET) =    97.01
  FLOW LENGTH(FEET) =   299.00   MANNING'S N =  0.013
  DEPTH OF FLOW IN  21.0 INCH PIPE IS  14.0 INCHES
  PIPE-FLOW VELOCITY(FEET/SEC.) =   6.94
  ESTIMATED PIPE DIAMETER(INCH) =  21.00    NUMBER OF PIPES =   1
  PIPE-FLOW(CFS) =      11.80
```

```
  PIPE TRAVEL TIME(MIN.) =   0.72    Tc(MIN.) =    8.09
  LONGEST FLOWPATH FROM NODE    339.10 TO NODE    346.00 =     968.00 FEET.

****************************************************************************
  FLOW PROCESS FROM NODE    346.00 TO NODE    346.00 IS CODE =  81
----------------------------------------------------------------------------
  >>>>>ADDITION OF SUBAREA TO MAINLINE PEAK FLOW<<<<<
============================================================================
   100 YEAR RAINFALL INTENSITY(INCH/HOUR) =  3.813
  *USER SPECIFIED(SUBAREA):
  RESIDENTIAL (43. DU/AC OR LESS) RUNOFF COEFFICIENT = .8300
  S.C.S. CURVE NUMBER (AMC II) =   0
  AREA-AVERAGE RUNOFF COEFFICIENT = 0.8300
  SUBAREA AREA(ACRES) =    1.30   SUBAREA RUNOFF(CFS) =    4.11
  TOTAL AREA(ACRES) =        4.9   TOTAL RUNOFF(CFS) =      15.51
  TC(MIN.) =    8.09

****************************************************************************
  FLOW PROCESS FROM NODE    346.00 TO NODE    350.00 IS CODE =  31
----------------------------------------------------------------------------
  >>>>>COMPUTE PIPE-FLOW TRAVEL TIME THRU SUBAREA<<<<<
  >>>>>USING COMPUTER-ESTIMATED PIPESIZE (NON-PRESSURE FLOW)<<<<<
============================================================================
  ELEVATION DATA: UPSTREAM(FEET) =   100.00  DOWNSTREAM(FEET) =    98.94
  FLOW LENGTH(FEET) =   106.00   MANNING'S N =  0.013
  DEPTH OF FLOW IN  24.0 INCH PIPE IS  15.1 INCHES
  PIPE-FLOW VELOCITY(FEET/SEC.) =   7.46
  ESTIMATED PIPE DIAMETER(INCH) =  24.00    NUMBER OF PIPES =   1
  PIPE-FLOW(CFS) =      15.51
  PIPE TRAVEL TIME(MIN.) =   0.24    Tc(MIN.) =    8.33
  LONGEST FLOWPATH FROM NODE    339.10 TO NODE    350.00 =    1074.00 FEET.

****************************************************************************
  FLOW PROCESS FROM NODE    350.00 TO NODE    350.00 IS CODE =  81
----------------------------------------------------------------------------
  >>>>>ADDITION OF SUBAREA TO MAINLINE PEAK FLOW<<<<<
============================================================================
   100 YEAR RAINFALL INTENSITY(INCH/HOUR) =  3.768
  *USER SPECIFIED(SUBAREA):
  RESIDENTIAL (43. DU/AC OR LESS) RUNOFF COEFFICIENT = .8300
  S.C.S. CURVE NUMBER (AMC II) =   0
  AREA-AVERAGE RUNOFF COEFFICIENT = 0.8300
  SUBAREA AREA(ACRES) =    2.50   SUBAREA RUNOFF(CFS) =    7.82
  TOTAL AREA(ACRES) =        7.4   TOTAL RUNOFF(CFS) =      23.14
  TC(MIN.) =    8.33

****************************************************************************
  FLOW PROCESS FROM NODE    350.00 TO NODE    351.10 IS CODE =  31
----------------------------------------------------------------------------
  >>>>>COMPUTE PIPE-FLOW TRAVEL TIME THRU SUBAREA<<<<<
  >>>>>USING COMPUTER-ESTIMATED PIPESIZE (NON-PRESSURE FLOW)<<<<<
============================================================================
  ELEVATION DATA: UPSTREAM(FEET) =   100.00  DOWNSTREAM(FEET) =    99.17
  FLOW LENGTH(FEET) =    83.00   MANNING'S N =  0.013
  DEPTH OF FLOW IN  27.0 INCH PIPE IS  18.0 INCHES
  PIPE-FLOW VELOCITY(FEET/SEC.) =   8.21
  ESTIMATED PIPE DIAMETER(INCH) =  27.00    NUMBER OF PIPES =   1
  PIPE-FLOW(CFS) =      23.14
```

```
  PIPE TRAVEL TIME(MIN.) =   0.17    Tc(MIN.) =    8.49
  LONGEST FLOWPATH FROM NODE    339.10 TO NODE    351.10 =    1157.00 FEET.

****************************************************************************
  FLOW PROCESS FROM NODE    351.10 TO NODE    351.10 IS CODE =   1
----------------------------------------------------------------------------
  >>>>>DESIGNATE INDEPENDENT STREAM FOR CONFLUENCE<<<<<
  >>>>>AND COMPUTE VARIOUS CONFLUENCED STREAM VALUES<<<<<
============================================================================
  TOTAL NUMBER OF STREAMS =  2
  CONFLUENCE VALUES USED FOR INDEPENDENT STREAM  2 ARE:
  TIME OF CONCENTRATION(MIN.) =    8.49
  RAINFALL INTENSITY(INCH/HR) =   3.74
  TOTAL STREAM AREA(ACRES) =     7.40
  PEAK FLOW RATE(CFS) AT CONFLUENCE =     23.14

  ** CONFLUENCE DATA **
  STREAM     RUNOFF       Tc      INTENSITY      AREA
  NUMBER      (CFS)     (MIN.)   (INCH/HOUR)    (ACRE)
      1       49.95    10.13        3.436         17.50
      2       23.14     8.49        3.736          7.40

  RAINFALL INTENSITY AND TIME OF CONCENTRATION RATIO
  CONFLUENCE FORMULA USED FOR  2 STREAMS.

  ** PEAK FLOW RATE TABLE **
  STREAM     RUNOFF      Tc      INTENSITY
  NUMBER      (CFS)    (MIN.)   (INCH/HOUR)
      1       65.04     8.49       3.736
      2       71.24    10.13       3.436

  COMPUTED CONFLUENCE ESTIMATES ARE AS FOLLOWS:
  PEAK FLOW RATE(CFS) =      71.24   Tc(MIN.) =   10.13
  TOTAL AREA(ACRES) =       24.9
  LONGEST FLOWPATH FROM NODE    300.00 TO NODE    351.10 =    2230.00 FEET.

****************************************************************************
  FLOW PROCESS FROM NODE    351.10 TO NODE    357.10 IS CODE =  31
----------------------------------------------------------------------------
  >>>>>COMPUTE PIPE-FLOW TRAVEL TIME THRU SUBAREA<<<<<
  >>>>>USING COMPUTER-ESTIMATED PIPESIZE (NON-PRESSURE FLOW)<<<<<
============================================================================
  ELEVATION DATA: UPSTREAM(FEET) =   100.00  DOWNSTREAM(FEET) =    99.02
  FLOW LENGTH(FEET) =    98.00   MANNING'S N =  0.013
  DEPTH OF FLOW IN  39.0 INCH PIPE IS  29.1 INCHES
  PIPE-FLOW VELOCITY(FEET/SEC.) =  10.73
  ESTIMATED PIPE DIAMETER(INCH) =  39.00    NUMBER OF PIPES =   1
  PIPE-FLOW(CFS) =      71.24
  PIPE TRAVEL TIME(MIN.) =   0.15    Tc(MIN.) =   10.28
  LONGEST FLOWPATH FROM NODE    300.00 TO NODE    357.10 =    2328.00 FEET.

****************************************************************************
  FLOW PROCESS FROM NODE    357.10 TO NODE    357.10 IS CODE =   1
----------------------------------------------------------------------------
  >>>>>DESIGNATE INDEPENDENT STREAM FOR CONFLUENCE<<<<<
============================================================================
  TOTAL NUMBER OF STREAMS =  2
  CONFLUENCE VALUES USED FOR INDEPENDENT STREAM  1 ARE:
```

```
  TIME OF CONCENTRATION(MIN.) =   10.28
  RAINFALL INTENSITY(INCH/HR) =   3.42
  TOTAL STREAM AREA(ACRES) =    24.90
  PEAK FLOW RATE(CFS) AT CONFLUENCE =     71.24

****************************************************************************
  FLOW PROCESS FROM NODE    352.00 TO NODE    353.00 IS CODE =  22
----------------------------------------------------------------------------
  >>>>>RATIONAL METHOD INITIAL SUBAREA ANALYSIS<<<<<
============================================================================
  *USER SPECIFIED(SUBAREA):
  RESIDENTIAL (1. DU/AC OR LESS) RUNOFF COEFFICIENT = .8300
  S.C.S. CURVE NUMBER (AMC II) =   0
  USER SPECIFIED Tc(MIN.) =    5.000
   100 YEAR RAINFALL INTENSITY(INCH/HOUR) =  4.400
  SUBAREA RUNOFF(CFS) =      0.37
  TOTAL AREA(ACRES) =      0.10   TOTAL RUNOFF(CFS) =      0.37

****************************************************************************
  FLOW PROCESS FROM NODE    353.00 TO NODE    354.00 IS CODE =  62
----------------------------------------------------------------------------
  >>>>>COMPUTE STREET FLOW TRAVEL TIME THRU SUBAREA<<<<<
  >>>>>(STREET TABLE SECTION #  2 USED)<<<<<
============================================================================
  UPSTREAM ELEVATION(FEET) =  100.00  DOWNSTREAM ELEVATION(FEET) =   96.78
  STREET LENGTH(FEET) =   161.00   CURB HEIGHT(INCHES) =  6.0
  STREET HALFWIDTH(FEET) = 20.00

  DISTANCE FROM CROWN TO CROSSFALL GRADEBREAK(FEET) =  15.00
  INSIDE STREET CROSSFALL(DECIMAL) =  0.020
  OUTSIDE STREET CROSSFALL(DECIMAL)  =  0.020

  SPECIFIED NUMBER OF HALFSTREETS CARRYING RUNOFF =  1
  STREET PARKWAY CROSSFALL(DECIMAL)  =  0.020
  Manning's FRICTION FACTOR for Streetflow Section(curb-to-curb) =   0.0160
  Manning's FRICTION FACTOR for Back-of-Walk Flow Section =   0.0200

    **TRAVEL TIME COMPUTED USING ESTIMATED FLOW(CFS) =       1.06
    STREETFLOW MODEL RESULTS USING ESTIMATED FLOW:
    STREET FLOW DEPTH(FEET) =  0.23
    HALFSTREET FLOOD WIDTH(FEET) =    6.14
    AVERAGE FLOW VELOCITY(FEET/SEC.) =    2.28
    PRODUCT OF DEPTH&VELOCITY(FT*FT/SEC.) =    0.52
  STREET FLOW TRAVEL TIME(MIN.) =   1.17   Tc(MIN.) =    6.17
   100 YEAR RAINFALL INTENSITY(INCH/HOUR) =  4.177
  *USER SPECIFIED(SUBAREA):
  RESIDENTIAL (43. DU/AC OR LESS) RUNOFF COEFFICIENT = .8300
  S.C.S. CURVE NUMBER (AMC II) =   0
  AREA-AVERAGE RUNOFF COEFFICIENT =  0.830
  SUBAREA AREA(ACRES) =    0.40      SUBAREA RUNOFF(CFS) =    1.39
  TOTAL AREA(ACRES) =        0.5        PEAK FLOW RATE(CFS) =       1.73

  END OF SUBAREA STREET FLOW HYDRAULICS:
  DEPTH(FEET) = 0.26   HALFSTREET FLOOD WIDTH(FEET) =   7.72
  FLOW VELOCITY(FEET/SEC.) =  2.54   DEPTH*VELOCITY(FT*FT/SEC.) =   0.66
  LONGEST FLOWPATH FROM NODE    352.00 TO NODE    354.00 =    9161.00 FEET.

****************************************************************************
```

```
  FLOW PROCESS FROM NODE    354.00 TO NODE    355.00 IS CODE =  31
----------------------------------------------------------------------------
  >>>>>COMPUTE PIPE-FLOW TRAVEL TIME THRU SUBAREA<<<<<
  >>>>>USING COMPUTER-ESTIMATED PIPESIZE (NON-PRESSURE FLOW)<<<<<
============================================================================
  ELEVATION DATA: UPSTREAM(FEET) =   100.00  DOWNSTREAM(FEET) =    99.67
  FLOW LENGTH(FEET) =    33.00   MANNING'S N =  0.013
  ESTIMATED PIPE DIAMETER(INCH) INCREASED TO 18.000
  DEPTH OF FLOW IN  18.0 INCH PIPE IS   5.1 INCHES
  PIPE-FLOW VELOCITY(FEET/SEC.) =   4.24
  ESTIMATED PIPE DIAMETER(INCH) =  18.00    NUMBER OF PIPES =   1
  PIPE-FLOW(CFS) =       1.73
  PIPE TRAVEL TIME(MIN.) =   0.13    Tc(MIN.) =    6.30
  LONGEST FLOWPATH FROM NODE    352.00 TO NODE    355.00 =    9194.00 FEET.

****************************************************************************
  FLOW PROCESS FROM NODE    355.00 TO NODE    355.00 IS CODE =  81
----------------------------------------------------------------------------
  >>>>>ADDITION OF SUBAREA TO MAINLINE PEAK FLOW<<<<<
============================================================================
   100 YEAR RAINFALL INTENSITY(INCH/HOUR) =  4.152
  *USER SPECIFIED(SUBAREA):
  RESIDENTIAL (43. DU/AC OR LESS) RUNOFF COEFFICIENT = .8300
  S.C.S. CURVE NUMBER (AMC II) =   0
  AREA-AVERAGE RUNOFF COEFFICIENT = 0.8300
  SUBAREA AREA(ACRES) =    1.10   SUBAREA RUNOFF(CFS) =    3.79
  TOTAL AREA(ACRES) =        1.6   TOTAL RUNOFF(CFS) =       5.51
  TC(MIN.) =    6.30

****************************************************************************
  FLOW PROCESS FROM NODE    355.00 TO NODE    356.00 IS CODE =  31
----------------------------------------------------------------------------
  >>>>>COMPUTE PIPE-FLOW TRAVEL TIME THRU SUBAREA<<<<<
  >>>>>USING COMPUTER-ESTIMATED PIPESIZE (NON-PRESSURE FLOW)<<<<<
============================================================================
  ELEVATION DATA: UPSTREAM(FEET) =   100.00  DOWNSTREAM(FEET) =    96.50
  FLOW LENGTH(FEET) =   350.00   MANNING'S N =  0.013
  ESTIMATED PIPE DIAMETER(INCH) INCREASED TO 18.000
  DEPTH OF FLOW IN  18.0 INCH PIPE IS   9.5 INCHES
  PIPE-FLOW VELOCITY(FEET/SEC.) =   5.80
  ESTIMATED PIPE DIAMETER(INCH) =  18.00    NUMBER OF PIPES =   1
  PIPE-FLOW(CFS) =       5.51
  PIPE TRAVEL TIME(MIN.) =   1.01    Tc(MIN.) =    7.31
  LONGEST FLOWPATH FROM NODE    352.00 TO NODE    356.00 =    9544.00 FEET.

****************************************************************************
  FLOW PROCESS FROM NODE    356.00 TO NODE    356.00 IS CODE =  81
----------------------------------------------------------------------------
  >>>>>ADDITION OF SUBAREA TO MAINLINE PEAK FLOW<<<<<
============================================================================
   100 YEAR RAINFALL INTENSITY(INCH/HOUR) =  3.961
  *USER SPECIFIED(SUBAREA):
  RESIDENTIAL (43. DU/AC OR LESS) RUNOFF COEFFICIENT = .8300
  S.C.S. CURVE NUMBER (AMC II) =   0
  AREA-AVERAGE RUNOFF COEFFICIENT = 0.8300
  SUBAREA AREA(ACRES) =    0.80   SUBAREA RUNOFF(CFS) =    2.63
  TOTAL AREA(ACRES) =        2.4   TOTAL RUNOFF(CFS) =       7.89
  TC(MIN.) =    7.31
```

```
****************************************************************************
  FLOW PROCESS FROM NODE    356.00 TO NODE    357.00 IS CODE =  31
----------------------------------------------------------------------------
  >>>>>COMPUTE PIPE-FLOW TRAVEL TIME THRU SUBAREA<<<<<
  >>>>>USING COMPUTER-ESTIMATED PIPESIZE (NON-PRESSURE FLOW)<<<<<
============================================================================
  ELEVATION DATA: UPSTREAM(FEET) =   100.00  DOWNSTREAM(FEET) =    99.15
  FLOW LENGTH(FEET) =    85.00   MANNING'S N =  0.013
  DEPTH OF FLOW IN  18.0 INCH PIPE IS  12.1 INCHES
  PIPE-FLOW VELOCITY(FEET/SEC.) =   6.27
  ESTIMATED PIPE DIAMETER(INCH) =  18.00    NUMBER OF PIPES =   1
  PIPE-FLOW(CFS) =       7.89
  PIPE TRAVEL TIME(MIN.) =   0.23    Tc(MIN.) =    7.54
  LONGEST FLOWPATH FROM NODE    352.00 TO NODE    357.00 =    9629.00 FEET.

****************************************************************************
  FLOW PROCESS FROM NODE    357.00 TO NODE    357.00 IS CODE =  81
----------------------------------------------------------------------------
  >>>>>ADDITION OF SUBAREA TO MAINLINE PEAK FLOW<<<<<
============================================================================
   100 YEAR RAINFALL INTENSITY(INCH/HOUR) =  3.918
  *USER SPECIFIED(SUBAREA):
  RESIDENTIAL (43. DU/AC OR LESS) RUNOFF COEFFICIENT = .8300
  S.C.S. CURVE NUMBER (AMC II) =   0
  AREA-AVERAGE RUNOFF COEFFICIENT = 0.8300
  SUBAREA AREA(ACRES) =    0.70   SUBAREA RUNOFF(CFS) =    2.28
  TOTAL AREA(ACRES) =        3.1   TOTAL RUNOFF(CFS) =      10.08
  TC(MIN.) =    7.54

****************************************************************************
  FLOW PROCESS FROM NODE    357.00 TO NODE    357.10 IS CODE =  31
----------------------------------------------------------------------------
  >>>>>COMPUTE PIPE-FLOW TRAVEL TIME THRU SUBAREA<<<<<
  >>>>>USING COMPUTER-ESTIMATED PIPESIZE (NON-PRESSURE FLOW)<<<<<
============================================================================
  ELEVATION DATA: UPSTREAM(FEET) =   100.00  DOWNSTREAM(FEET) =    99.64
  FLOW LENGTH(FEET) =    36.00   MANNING'S N =  0.013
  DEPTH OF FLOW IN  21.0 INCH PIPE IS  12.6 INCHES
  PIPE-FLOW VELOCITY(FEET/SEC.) =   6.72
  ESTIMATED PIPE DIAMETER(INCH) =  21.00    NUMBER OF PIPES =   1
  PIPE-FLOW(CFS) =      10.08
  PIPE TRAVEL TIME(MIN.) =   0.09    Tc(MIN.) =    7.63
  LONGEST FLOWPATH FROM NODE    352.00 TO NODE    357.10 =    9665.00 FEET.

****************************************************************************
  FLOW PROCESS FROM NODE    357.10 TO NODE    357.10 IS CODE =   1
----------------------------------------------------------------------------
  >>>>>DESIGNATE INDEPENDENT STREAM FOR CONFLUENCE<<<<<
  >>>>>AND COMPUTE VARIOUS CONFLUENCED STREAM VALUES<<<<<
============================================================================
  TOTAL NUMBER OF STREAMS =  2
  CONFLUENCE VALUES USED FOR INDEPENDENT STREAM  2 ARE:
  TIME OF CONCENTRATION(MIN.) =    7.63
  RAINFALL INTENSITY(INCH/HR) =   3.90
  TOTAL STREAM AREA(ACRES) =     3.10
  PEAK FLOW RATE(CFS) AT CONFLUENCE =     10.08
```

```
  ** CONFLUENCE DATA **
  STREAM     RUNOFF       Tc      INTENSITY      AREA
  NUMBER      (CFS)     (MIN.)   (INCH/HOUR)    (ACRE)
      1       71.24    10.28        3.419         24.90
      2       10.08     7.63        3.901          3.10

  RAINFALL INTENSITY AND TIME OF CONCENTRATION RATIO
  CONFLUENCE FORMULA USED FOR  2 STREAMS.

  ** PEAK FLOW RATE TABLE **
  STREAM     RUNOFF      Tc      INTENSITY
  NUMBER      (CFS)    (MIN.)   (INCH/HOUR)
      1       72.52     7.63       3.901
      2       80.08    10.28       3.419

  COMPUTED CONFLUENCE ESTIMATES ARE AS FOLLOWS:
  PEAK FLOW RATE(CFS) =      80.08   Tc(MIN.) =   10.28
  TOTAL AREA(ACRES) =       28.0
  LONGEST FLOWPATH FROM NODE    352.00 TO NODE    357.10 =    9665.00 FEET.

****************************************************************************
  FLOW PROCESS FROM NODE    357.10 TO NODE    358.00 IS CODE =  31
----------------------------------------------------------------------------
  >>>>>COMPUTE PIPE-FLOW TRAVEL TIME THRU SUBAREA<<<<<
  >>>>>USING COMPUTER-ESTIMATED PIPESIZE (NON-PRESSURE FLOW)<<<<<
============================================================================
  ELEVATION DATA: UPSTREAM(FEET) =   100.00  DOWNSTREAM(FEET) =    98.44
  FLOW LENGTH(FEET) =   156.00   MANNING'S N =  0.013
  DEPTH OF FLOW IN  42.0 INCH PIPE IS  29.4 INCHES
  PIPE-FLOW VELOCITY(FEET/SEC.) =  11.14
  ESTIMATED PIPE DIAMETER(INCH) =  42.00    NUMBER OF PIPES =   1
  PIPE-FLOW(CFS) =      80.08
  PIPE TRAVEL TIME(MIN.) =   0.23    Tc(MIN.) =   10.51
  LONGEST FLOWPATH FROM NODE    352.00 TO NODE    358.00 =    9821.00 FEET.

****************************************************************************
  FLOW PROCESS FROM NODE    358.00 TO NODE    358.00 IS CODE =  81
----------------------------------------------------------------------------
  >>>>>ADDITION OF SUBAREA TO MAINLINE PEAK FLOW<<<<<
============================================================================
   100 YEAR RAINFALL INTENSITY(INCH/HOUR) =  3.394
  *USER SPECIFIED(SUBAREA):
  RESIDENTIAL (43. DU/AC OR LESS) RUNOFF COEFFICIENT = .8300
  S.C.S. CURVE NUMBER (AMC II) =   0
  AREA-AVERAGE RUNOFF COEFFICIENT = 0.7995
  SUBAREA AREA(ACRES) =    0.70   SUBAREA RUNOFF(CFS) =    1.97
  TOTAL AREA(ACRES) =       28.7   TOTAL RUNOFF(CFS) =      80.08
  TC(MIN.) =   10.51
  NOTE: PEAK FLOW RATE DEFAULTED TO UPSTREAM VALUE

****************************************************************************
  FLOW PROCESS FROM NODE    358.00 TO NODE    367.00 IS CODE =  31
----------------------------------------------------------------------------
  >>>>>COMPUTE PIPE-FLOW TRAVEL TIME THRU SUBAREA<<<<<
  >>>>>USING COMPUTER-ESTIMATED PIPESIZE (NON-PRESSURE FLOW)<<<<<
============================================================================
  ELEVATION DATA: UPSTREAM(FEET) =   100.00  DOWNSTREAM(FEET) =    98.77
  FLOW LENGTH(FEET) =   123.00   MANNING'S N =  0.013
```

```
  DEPTH OF FLOW IN  42.0 INCH PIPE IS  29.4 INCHES
  PIPE-FLOW VELOCITY(FEET/SEC.) =  11.14
  ESTIMATED PIPE DIAMETER(INCH) =  42.00    NUMBER OF PIPES =   1
  PIPE-FLOW(CFS) =      80.08
  PIPE TRAVEL TIME(MIN.) =   0.18    Tc(MIN.) =   10.70
  LONGEST FLOWPATH FROM NODE    352.00 TO NODE    367.00 =    9944.00 FEET.

****************************************************************************
  FLOW PROCESS FROM NODE    367.00 TO NODE    367.00 IS CODE =   1
----------------------------------------------------------------------------
  >>>>>DESIGNATE INDEPENDENT STREAM FOR CONFLUENCE<<<<<
============================================================================
  TOTAL NUMBER OF STREAMS =  2
  CONFLUENCE VALUES USED FOR INDEPENDENT STREAM  1 ARE:
  TIME OF CONCENTRATION(MIN.) =   10.70
  RAINFALL INTENSITY(INCH/HR) =   3.37
  TOTAL STREAM AREA(ACRES) =    28.70
  PEAK FLOW RATE(CFS) AT CONFLUENCE =     80.08

****************************************************************************
  FLOW PROCESS FROM NODE    359.00 TO NODE    359.10 IS CODE =  22
----------------------------------------------------------------------------
  >>>>>RATIONAL METHOD INITIAL SUBAREA ANALYSIS<<<<<
============================================================================
  *USER SPECIFIED(SUBAREA):
  RESIDENTIAL (1. DU/AC OR LESS) RUNOFF COEFFICIENT = .8300
  S.C.S. CURVE NUMBER (AMC II) =   0
  USER SPECIFIED Tc(MIN.) =    5.000
   100 YEAR RAINFALL INTENSITY(INCH/HOUR) =  4.400
  SUBAREA RUNOFF(CFS) =      0.37
  TOTAL AREA(ACRES) =      0.10   TOTAL RUNOFF(CFS) =      0.37

****************************************************************************
  FLOW PROCESS FROM NODE    359.10 TO NODE    360.00 IS CODE =  62
----------------------------------------------------------------------------
  >>>>>COMPUTE STREET FLOW TRAVEL TIME THRU SUBAREA<<<<<
  >>>>>(STREET TABLE SECTION #  2 USED)<<<<<
============================================================================
  UPSTREAM ELEVATION(FEET) =  100.00  DOWNSTREAM ELEVATION(FEET) =   97.18
  STREET LENGTH(FEET) =   141.00   CURB HEIGHT(INCHES) =  6.0
  STREET HALFWIDTH(FEET) = 20.00

  DISTANCE FROM CROWN TO CROSSFALL GRADEBREAK(FEET) =  15.00
  INSIDE STREET CROSSFALL(DECIMAL) =  0.020
  OUTSIDE STREET CROSSFALL(DECIMAL)  =  0.020

  SPECIFIED NUMBER OF HALFSTREETS CARRYING RUNOFF =  1
  STREET PARKWAY CROSSFALL(DECIMAL)  =  0.020
  Manning's FRICTION FACTOR for Streetflow Section(curb-to-curb) =   0.0160
  Manning's FRICTION FACTOR for Back-of-Walk Flow Section =   0.0200

    **TRAVEL TIME COMPUTED USING ESTIMATED FLOW(CFS) =       1.77
    STREETFLOW MODEL RESULTS USING ESTIMATED FLOW:
    STREET FLOW DEPTH(FEET) =  0.26
    HALFSTREET FLOOD WIDTH(FEET) =    7.78
    AVERAGE FLOW VELOCITY(FEET/SEC.) =    2.56
    PRODUCT OF DEPTH&VELOCITY(FT*FT/SEC.) =    0.67
  STREET FLOW TRAVEL TIME(MIN.) =   0.92   Tc(MIN.) =    5.92
```

```
   100 YEAR RAINFALL INTENSITY(INCH/HOUR) =  4.225
  *USER SPECIFIED(SUBAREA):
  RESIDENTIAL (43. DU/AC OR LESS) RUNOFF COEFFICIENT = .8300
  S.C.S. CURVE NUMBER (AMC II) =   0
  AREA-AVERAGE RUNOFF COEFFICIENT =  0.830
  SUBAREA AREA(ACRES) =    0.80      SUBAREA RUNOFF(CFS) =    2.81
  TOTAL AREA(ACRES) =        0.9        PEAK FLOW RATE(CFS) =       3.16

  END OF SUBAREA STREET FLOW HYDRAULICS:
  DEPTH(FEET) = 0.30   HALFSTREET FLOOD WIDTH(FEET) =   9.95
  FLOW VELOCITY(FEET/SEC.) =  2.93   DEPTH*VELOCITY(FT*FT/SEC.) =   0.89
  LONGEST FLOWPATH FROM NODE    359.00 TO NODE    360.00 =  900141.00 FEET.

****************************************************************************
  FLOW PROCESS FROM NODE    360.00 TO NODE    362.00 IS CODE =  31
----------------------------------------------------------------------------
  >>>>>COMPUTE PIPE-FLOW TRAVEL TIME THRU SUBAREA<<<<<
  >>>>>USING COMPUTER-ESTIMATED PIPESIZE (NON-PRESSURE FLOW)<<<<<
============================================================================
  ELEVATION DATA: UPSTREAM(FEET) =   100.00  DOWNSTREAM(FEET) =    98.31
  FLOW LENGTH(FEET) =   169.00   MANNING'S N =  0.013
  ESTIMATED PIPE DIAMETER(INCH) INCREASED TO 18.000
  DEPTH OF FLOW IN  18.0 INCH PIPE IS   7.0 INCHES
  PIPE-FLOW VELOCITY(FEET/SEC.) =   5.01
  ESTIMATED PIPE DIAMETER(INCH) =  18.00    NUMBER OF PIPES =   1
  PIPE-FLOW(CFS) =       3.16
  PIPE TRAVEL TIME(MIN.) =   0.56    Tc(MIN.) =    6.48
  LONGEST FLOWPATH FROM NODE    359.00 TO NODE    362.00 =  900310.00 FEET.

****************************************************************************
  FLOW PROCESS FROM NODE    362.00 TO NODE    362.00 IS CODE =  81
----------------------------------------------------------------------------
  >>>>>ADDITION OF SUBAREA TO MAINLINE PEAK FLOW<<<<<
============================================================================
   100 YEAR RAINFALL INTENSITY(INCH/HOUR) =  4.118
  *USER SPECIFIED(SUBAREA):
  RESIDENTIAL (43. DU/AC OR LESS) RUNOFF COEFFICIENT = .8300
  S.C.S. CURVE NUMBER (AMC II) =   0
  AREA-AVERAGE RUNOFF COEFFICIENT = 0.8300
  SUBAREA AREA(ACRES) =    0.80   SUBAREA RUNOFF(CFS) =    2.73
  TOTAL AREA(ACRES) =        1.7   TOTAL RUNOFF(CFS) =       5.81
  TC(MIN.) =    6.48

****************************************************************************
  FLOW PROCESS FROM NODE    362.00 TO NODE    364.00 IS CODE =  31
----------------------------------------------------------------------------
  >>>>>COMPUTE PIPE-FLOW TRAVEL TIME THRU SUBAREA<<<<<
  >>>>>USING COMPUTER-ESTIMATED PIPESIZE (NON-PRESSURE FLOW)<<<<<
============================================================================
  ELEVATION DATA: UPSTREAM(FEET) =   100.00  DOWNSTREAM(FEET) =    99.08
  FLOW LENGTH(FEET) =    92.00   MANNING'S N =  0.013
  ESTIMATED PIPE DIAMETER(INCH) INCREASED TO 18.000
  DEPTH OF FLOW IN  18.0 INCH PIPE IS   9.8 INCHES
  PIPE-FLOW VELOCITY(FEET/SEC.) =   5.87
  ESTIMATED PIPE DIAMETER(INCH) =  18.00    NUMBER OF PIPES =   1
  PIPE-FLOW(CFS) =       5.81
  PIPE TRAVEL TIME(MIN.) =   0.26    Tc(MIN.) =    6.74
  LONGEST FLOWPATH FROM NODE    359.00 TO NODE    364.00 =  900402.00 FEET.
```

```
****************************************************************************
  FLOW PROCESS FROM NODE    364.00 TO NODE    364.00 IS CODE =  81
----------------------------------------------------------------------------
  >>>>>ADDITION OF SUBAREA TO MAINLINE PEAK FLOW<<<<<
============================================================================
   100 YEAR RAINFALL INTENSITY(INCH/HOUR) =  4.069
  *USER SPECIFIED(SUBAREA):
  RESIDENTIAL (43. DU/AC OR LESS) RUNOFF COEFFICIENT = .8300
  S.C.S. CURVE NUMBER (AMC II) =   0
  AREA-AVERAGE RUNOFF COEFFICIENT = 0.8300
  SUBAREA AREA(ACRES) =    0.70   SUBAREA RUNOFF(CFS) =    2.36
  TOTAL AREA(ACRES) =        2.4   TOTAL RUNOFF(CFS) =       8.11
  TC(MIN.) =    6.74

****************************************************************************
  FLOW PROCESS FROM NODE    364.00 TO NODE    366.00 IS CODE =  31
----------------------------------------------------------------------------
  >>>>>COMPUTE PIPE-FLOW TRAVEL TIME THRU SUBAREA<<<<<
  >>>>>USING COMPUTER-ESTIMATED PIPESIZE (NON-PRESSURE FLOW)<<<<<
============================================================================
  ELEVATION DATA: UPSTREAM(FEET) =   100.00  DOWNSTREAM(FEET) =    98.06
  FLOW LENGTH(FEET) =   194.00   MANNING'S N =  0.013
  DEPTH OF FLOW IN  18.0 INCH PIPE IS  12.3 INCHES
  PIPE-FLOW VELOCITY(FEET/SEC.) =   6.30
  ESTIMATED PIPE DIAMETER(INCH) =  18.00    NUMBER OF PIPES =   1
  PIPE-FLOW(CFS) =       8.11
  PIPE TRAVEL TIME(MIN.) =   0.51    Tc(MIN.) =    7.26
  LONGEST FLOWPATH FROM NODE    359.00 TO NODE    366.00 =  900596.00 FEET.

****************************************************************************
  FLOW PROCESS FROM NODE    366.00 TO NODE    366.00 IS CODE =  81
----------------------------------------------------------------------------
  >>>>>ADDITION OF SUBAREA TO MAINLINE PEAK FLOW<<<<<
============================================================================
   100 YEAR RAINFALL INTENSITY(INCH/HOUR) =  3.971
  *USER SPECIFIED(SUBAREA):
  RESIDENTIAL (43. DU/AC OR LESS) RUNOFF COEFFICIENT = .8300
  S.C.S. CURVE NUMBER (AMC II) =   0
  AREA-AVERAGE RUNOFF COEFFICIENT = 0.8300
  SUBAREA AREA(ACRES) =    1.20   SUBAREA RUNOFF(CFS) =    3.96
  TOTAL AREA(ACRES) =        3.6   TOTAL RUNOFF(CFS) =      11.87
  TC(MIN.) =    7.26

****************************************************************************
  FLOW PROCESS FROM NODE    366.00 TO NODE    367.00 IS CODE =  31
----------------------------------------------------------------------------
  >>>>>COMPUTE PIPE-FLOW TRAVEL TIME THRU SUBAREA<<<<<
  >>>>>USING COMPUTER-ESTIMATED PIPESIZE (NON-PRESSURE FLOW)<<<<<
============================================================================
  ELEVATION DATA: UPSTREAM(FEET) =   100.00  DOWNSTREAM(FEET) =    99.64
  FLOW LENGTH(FEET) =    36.00   MANNING'S N =  0.013
  DEPTH OF FLOW IN  21.0 INCH PIPE IS  14.0 INCHES
  PIPE-FLOW VELOCITY(FEET/SEC.) =   6.95
  ESTIMATED PIPE DIAMETER(INCH) =  21.00    NUMBER OF PIPES =   1
  PIPE-FLOW(CFS) =      11.87
  PIPE TRAVEL TIME(MIN.) =   0.09    Tc(MIN.) =    7.34
  LONGEST FLOWPATH FROM NODE    359.00 TO NODE    367.00 =  900632.00 FEET.
```

```
****************************************************************************
  FLOW PROCESS FROM NODE    367.00 TO NODE    367.00 IS CODE =   1
----------------------------------------------------------------------------
  >>>>>DESIGNATE INDEPENDENT STREAM FOR CONFLUENCE<<<<<
  >>>>>AND COMPUTE VARIOUS CONFLUENCED STREAM VALUES<<<<<
============================================================================
  TOTAL NUMBER OF STREAMS =  2
  CONFLUENCE VALUES USED FOR INDEPENDENT STREAM  2 ARE:
  TIME OF CONCENTRATION(MIN.) =    7.34
  RAINFALL INTENSITY(INCH/HR) =   3.95
  TOTAL STREAM AREA(ACRES) =     3.60
  PEAK FLOW RATE(CFS) AT CONFLUENCE =     11.87

  ** CONFLUENCE DATA **
  STREAM     RUNOFF       Tc      INTENSITY      AREA
  NUMBER      (CFS)     (MIN.)   (INCH/HOUR)    (ACRE)
      1       80.08    10.70        3.373         28.70
      2       11.87     7.34        3.955          3.60

  RAINFALL INTENSITY AND TIME OF CONCENTRATION RATIO
  CONFLUENCE FORMULA USED FOR  2 STREAMS.

  ** PEAK FLOW RATE TABLE **
  STREAM     RUNOFF      Tc      INTENSITY
  NUMBER      (CFS)    (MIN.)   (INCH/HOUR)
      1       80.16     7.34       3.955
      2       90.20    10.70       3.373

  COMPUTED CONFLUENCE ESTIMATES ARE AS FOLLOWS:
  PEAK FLOW RATE(CFS) =      90.20   Tc(MIN.) =   10.70
  TOTAL AREA(ACRES) =       32.3
  LONGEST FLOWPATH FROM NODE    359.00 TO NODE    367.00 =  900632.00 FEET.

****************************************************************************
  FLOW PROCESS FROM NODE    367.00 TO NODE    398.00 IS CODE =  31
----------------------------------------------------------------------------
  >>>>>COMPUTE PIPE-FLOW TRAVEL TIME THRU SUBAREA<<<<<
  >>>>>USING COMPUTER-ESTIMATED PIPESIZE (NON-PRESSURE FLOW)<<<<<
============================================================================
  ELEVATION DATA: UPSTREAM(FEET) =   100.00  DOWNSTREAM(FEET) =    98.92
  FLOW LENGTH(FEET) =   108.00   MANNING'S N =  0.013
  DEPTH OF FLOW IN  42.0 INCH PIPE IS  32.4 INCHES
  PIPE-FLOW VELOCITY(FEET/SEC.) =  11.32
  ESTIMATED PIPE DIAMETER(INCH) =  42.00    NUMBER OF PIPES =   1
  PIPE-FLOW(CFS) =      90.20
  PIPE TRAVEL TIME(MIN.) =   0.16    Tc(MIN.) =   10.86
  LONGEST FLOWPATH FROM NODE    359.00 TO NODE    398.00 =  900740.00 FEET.

****************************************************************************
  FLOW PROCESS FROM NODE    367.10 TO NODE    367.20 IS CODE =  22
----------------------------------------------------------------------------
  >>>>>RATIONAL METHOD INITIAL SUBAREA ANALYSIS<<<<<
============================================================================
  *USER SPECIFIED(SUBAREA):
  RESIDENTIAL (1. DU/AC OR LESS) RUNOFF COEFFICIENT = .7800
  S.C.S. CURVE NUMBER (AMC II) =   0
  USER SPECIFIED Tc(MIN.) =    5.000
```

```
   100 YEAR RAINFALL INTENSITY(INCH/HOUR) =  4.400
  SUBAREA RUNOFF(CFS) =      0.34
  TOTAL AREA(ACRES) =      0.10   TOTAL RUNOFF(CFS) =      0.34

****************************************************************************
  FLOW PROCESS FROM NODE    367.20 TO NODE    368.00 IS CODE =  51
----------------------------------------------------------------------------
  >>>>>COMPUTE TRAPEZOIDAL CHANNEL FLOW<<<<<
  >>>>>TRAVELTIME THRU SUBAREA (EXISTING ELEMENT)<<<<<
============================================================================
  ELEVATION DATA: UPSTREAM(FEET) =    100.00  DOWNSTREAM(FEET) =     93.94
  CHANNEL LENGTH THRU SUBAREA(FEET) =   303.00   CHANNEL SLOPE =  0.0200
  CHANNEL BASE(FEET) =    2.00   "Z" FACTOR =   2.000
  MANNING'S FACTOR = 0.030   MAXIMUM DEPTH(FEET) =   5.00
   100 YEAR RAINFALL INTENSITY(INCH/HOUR) =  3.867
  *USER SPECIFIED(SUBAREA):
  RESIDENTIAL (43. DU/AC OR LESS) RUNOFF COEFFICIENT = .7800
  S.C.S. CURVE NUMBER (AMC II) =   0
  TRAVEL TIME COMPUTED USING ESTIMATED FLOW(CFS) =       0.65
  TRAVEL TIME THRU SUBAREA BASED ON VELOCITY(FEET/SEC.) =   1.80
  AVERAGE FLOW DEPTH(FEET) =   0.16   TRAVEL TIME(MIN.) =   2.81
  Tc(MIN.) =    7.81
  SUBAREA AREA(ACRES) =     0.20       SUBAREA RUNOFF(CFS) =    0.60
  AREA-AVERAGE RUNOFF COEFFICIENT =  0.780
  TOTAL AREA(ACRES) =        0.3         PEAK FLOW RATE(CFS) =       0.90

  END OF SUBAREA CHANNEL FLOW HYDRAULICS:
  DEPTH(FEET) =  0.19   FLOW VELOCITY(FEET/SEC.) =   2.03
  LONGEST FLOWPATH FROM NODE    367.10 TO NODE    368.00 = ********** FEET.

****************************************************************************
  FLOW PROCESS FROM NODE    368.00 TO NODE    370.00 IS CODE =  31
----------------------------------------------------------------------------
  >>>>>COMPUTE PIPE-FLOW TRAVEL TIME THRU SUBAREA<<<<<
  >>>>>USING COMPUTER-ESTIMATED PIPESIZE (NON-PRESSURE FLOW)<<<<<
============================================================================
  ELEVATION DATA: UPSTREAM(FEET) =   100.00  DOWNSTREAM(FEET) =    99.02
  FLOW LENGTH(FEET) =    98.00   MANNING'S N =  0.013
  ESTIMATED PIPE DIAMETER(INCH) INCREASED TO 18.000
  DEPTH OF FLOW IN  18.0 INCH PIPE IS   3.7 INCHES
  PIPE-FLOW VELOCITY(FEET/SEC.) =   3.51
  ESTIMATED PIPE DIAMETER(INCH) =  18.00    NUMBER OF PIPES =   1
  PIPE-FLOW(CFS) =       0.90
  PIPE TRAVEL TIME(MIN.) =   0.46    Tc(MIN.) =    8.27
  LONGEST FLOWPATH FROM NODE    367.10 TO NODE    370.00 = ********** FEET.

****************************************************************************
  FLOW PROCESS FROM NODE    370.00 TO NODE    370.00 IS CODE =  81
----------------------------------------------------------------------------
  >>>>>ADDITION OF SUBAREA TO MAINLINE PEAK FLOW<<<<<
============================================================================
   100 YEAR RAINFALL INTENSITY(INCH/HOUR) =  3.779
  *USER SPECIFIED(SUBAREA):
  RESIDENTIAL (43. DU/AC OR LESS) RUNOFF COEFFICIENT = .7800
  S.C.S. CURVE NUMBER (AMC II) =   0
  AREA-AVERAGE RUNOFF COEFFICIENT = 0.7800
  SUBAREA AREA(ACRES) =    0.70   SUBAREA RUNOFF(CFS) =    2.06
  TOTAL AREA(ACRES) =        1.0   TOTAL RUNOFF(CFS) =       2.95
```

```
  TC(MIN.) =    8.27

****************************************************************************
  FLOW PROCESS FROM NODE    370.00 TO NODE    372.00 IS CODE =  31
----------------------------------------------------------------------------
  >>>>>COMPUTE PIPE-FLOW TRAVEL TIME THRU SUBAREA<<<<<
  >>>>>USING COMPUTER-ESTIMATED PIPESIZE (NON-PRESSURE FLOW)<<<<<
============================================================================
  ELEVATION DATA: UPSTREAM(FEET) =   100.00  DOWNSTREAM(FEET) =    98.59
  FLOW LENGTH(FEET) =   141.00   MANNING'S N =  0.013
  ESTIMATED PIPE DIAMETER(INCH) INCREASED TO 18.000
  DEPTH OF FLOW IN  18.0 INCH PIPE IS   6.7 INCHES
  PIPE-FLOW VELOCITY(FEET/SEC.) =   4.93
  ESTIMATED PIPE DIAMETER(INCH) =  18.00    NUMBER OF PIPES =   1
  PIPE-FLOW(CFS) =       2.95
  PIPE TRAVEL TIME(MIN.) =   0.48    Tc(MIN.) =    8.75
  LONGEST FLOWPATH FROM NODE    367.10 TO NODE    372.00 = ********** FEET.

****************************************************************************
  FLOW PROCESS FROM NODE    372.00 TO NODE    372.00 IS CODE =  81
----------------------------------------------------------------------------
  >>>>>ADDITION OF SUBAREA TO MAINLINE PEAK FLOW<<<<<
============================================================================
   100 YEAR RAINFALL INTENSITY(INCH/HOUR) =  3.688
  *USER SPECIFIED(SUBAREA):
  RESIDENTIAL (43. DU/AC OR LESS) RUNOFF COEFFICIENT = .7800
  S.C.S. CURVE NUMBER (AMC II) =   0
  AREA-AVERAGE RUNOFF COEFFICIENT = 0.7800
  SUBAREA AREA(ACRES) =    0.70   SUBAREA RUNOFF(CFS) =    2.01
  TOTAL AREA(ACRES) =        1.7   TOTAL RUNOFF(CFS) =       4.89
  TC(MIN.) =    8.75

****************************************************************************
  FLOW PROCESS FROM NODE    372.00 TO NODE    374.00 IS CODE =  31
----------------------------------------------------------------------------
  >>>>>COMPUTE PIPE-FLOW TRAVEL TIME THRU SUBAREA<<<<<
  >>>>>USING COMPUTER-ESTIMATED PIPESIZE (NON-PRESSURE FLOW)<<<<<
============================================================================
  ELEVATION DATA: UPSTREAM(FEET) =   100.00  DOWNSTREAM(FEET) =    98.63
  FLOW LENGTH(FEET) =   137.00   MANNING'S N =  0.013
  ESTIMATED PIPE DIAMETER(INCH) INCREASED TO 18.000
  DEPTH OF FLOW IN  18.0 INCH PIPE IS   8.9 INCHES
  PIPE-FLOW VELOCITY(FEET/SEC.) =   5.63
  ESTIMATED PIPE DIAMETER(INCH) =  18.00    NUMBER OF PIPES =   1
  PIPE-FLOW(CFS) =       4.89
  PIPE TRAVEL TIME(MIN.) =   0.41    Tc(MIN.) =    9.15
  LONGEST FLOWPATH FROM NODE    367.10 TO NODE    374.00 = ********** FEET.

****************************************************************************
  FLOW PROCESS FROM NODE    374.00 TO NODE    374.00 IS CODE =  81
----------------------------------------------------------------------------
  >>>>>ADDITION OF SUBAREA TO MAINLINE PEAK FLOW<<<<<
============================================================================
   100 YEAR RAINFALL INTENSITY(INCH/HOUR) =  3.611
  *USER SPECIFIED(SUBAREA):
  RESIDENTIAL (43. DU/AC OR LESS) RUNOFF COEFFICIENT = .7800
  S.C.S. CURVE NUMBER (AMC II) =   0
  AREA-AVERAGE RUNOFF COEFFICIENT = 0.7800
```

```
  SUBAREA AREA(ACRES) =    0.50   SUBAREA RUNOFF(CFS) =    1.41
  TOTAL AREA(ACRES) =        2.2   TOTAL RUNOFF(CFS) =       6.20
  TC(MIN.) =    9.15

****************************************************************************
  FLOW PROCESS FROM NODE    374.00 TO NODE    379.00 IS CODE =  31
----------------------------------------------------------------------------
  >>>>>COMPUTE PIPE-FLOW TRAVEL TIME THRU SUBAREA<<<<<
  >>>>>USING COMPUTER-ESTIMATED PIPESIZE (NON-PRESSURE FLOW)<<<<<
============================================================================
  ELEVATION DATA: UPSTREAM(FEET) =   100.00  DOWNSTREAM(FEET) =    98.96
  FLOW LENGTH(FEET) =   104.00   MANNING'S N =  0.013
  DEPTH OF FLOW IN  18.0 INCH PIPE IS  10.3 INCHES
  PIPE-FLOW VELOCITY(FEET/SEC.) =   5.96
  ESTIMATED PIPE DIAMETER(INCH) =  18.00    NUMBER OF PIPES =   1
  PIPE-FLOW(CFS) =       6.20
  PIPE TRAVEL TIME(MIN.) =   0.29    Tc(MIN.) =    9.44
  LONGEST FLOWPATH FROM NODE    367.10 TO NODE    379.00 = ********** FEET.

****************************************************************************
  FLOW PROCESS FROM NODE    379.00 TO NODE    379.00 IS CODE =  81
----------------------------------------------------------------------------
  >>>>>ADDITION OF SUBAREA TO MAINLINE PEAK FLOW<<<<<
============================================================================
   100 YEAR RAINFALL INTENSITY(INCH/HOUR) =  3.556
  *USER SPECIFIED(SUBAREA):
  RESIDENTIAL (43. DU/AC OR LESS) RUNOFF COEFFICIENT = .7800
  S.C.S. CURVE NUMBER (AMC II) =   0
  AREA-AVERAGE RUNOFF COEFFICIENT = 0.7800
  SUBAREA AREA(ACRES) =    2.20   SUBAREA RUNOFF(CFS) =    6.10
  TOTAL AREA(ACRES) =        4.4   TOTAL RUNOFF(CFS) =      12.20
  TC(MIN.) =    9.44

****************************************************************************
  FLOW PROCESS FROM NODE    379.00 TO NODE    380.00 IS CODE =  31
----------------------------------------------------------------------------
  >>>>>COMPUTE PIPE-FLOW TRAVEL TIME THRU SUBAREA<<<<<
  >>>>>USING COMPUTER-ESTIMATED PIPESIZE (NON-PRESSURE FLOW)<<<<<
============================================================================
  ELEVATION DATA: UPSTREAM(FEET) =   100.00  DOWNSTREAM(FEET) =    99.26
  FLOW LENGTH(FEET) =    74.00   MANNING'S N =  0.013
  DEPTH OF FLOW IN  21.0 INCH PIPE IS  14.3 INCHES
  PIPE-FLOW VELOCITY(FEET/SEC.) =   6.98
  ESTIMATED PIPE DIAMETER(INCH) =  21.00    NUMBER OF PIPES =   1
  PIPE-FLOW(CFS) =      12.20
  PIPE TRAVEL TIME(MIN.) =   0.18    Tc(MIN.) =    9.62
  LONGEST FLOWPATH FROM NODE    367.10 TO NODE    380.00 = ********** FEET.

****************************************************************************
  FLOW PROCESS FROM NODE    380.00 TO NODE    380.00 IS CODE =  81
----------------------------------------------------------------------------
  >>>>>ADDITION OF SUBAREA TO MAINLINE PEAK FLOW<<<<<
============================================================================
   100 YEAR RAINFALL INTENSITY(INCH/HOUR) =  3.522
  *USER SPECIFIED(SUBAREA):
  RESIDENTIAL (43. DU/AC OR LESS) RUNOFF COEFFICIENT = .8300
  S.C.S. CURVE NUMBER (AMC II) =   0
  AREA-AVERAGE RUNOFF COEFFICIENT = 0.7907
```

```
  SUBAREA AREA(ACRES) =    1.20   SUBAREA RUNOFF(CFS) =    3.51
  TOTAL AREA(ACRES) =        5.6   TOTAL RUNOFF(CFS) =      15.60
  TC(MIN.) =    9.62

****************************************************************************
  FLOW PROCESS FROM NODE    380.00 TO NODE    382.00 IS CODE =  31
----------------------------------------------------------------------------
  >>>>>COMPUTE PIPE-FLOW TRAVEL TIME THRU SUBAREA<<<<<
  >>>>>USING COMPUTER-ESTIMATED PIPESIZE (NON-PRESSURE FLOW)<<<<<
============================================================================
  ELEVATION DATA: UPSTREAM(FEET) =   100.00  DOWNSTREAM(FEET) =    98.56
  FLOW LENGTH(FEET) =   144.00   MANNING'S N =  0.013
  DEPTH OF FLOW IN  24.0 INCH PIPE IS  15.1 INCHES
  PIPE-FLOW VELOCITY(FEET/SEC.) =   7.47
  ESTIMATED PIPE DIAMETER(INCH) =  24.00    NUMBER OF PIPES =   1
  PIPE-FLOW(CFS) =      15.60
  PIPE TRAVEL TIME(MIN.) =   0.32    Tc(MIN.) =    9.94
  LONGEST FLOWPATH FROM NODE    367.10 TO NODE    382.00 = ********** FEET.

****************************************************************************
  FLOW PROCESS FROM NODE    382.00 TO NODE    382.00 IS CODE =  81
----------------------------------------------------------------------------
  >>>>>ADDITION OF SUBAREA TO MAINLINE PEAK FLOW<<<<<
============================================================================
   100 YEAR RAINFALL INTENSITY(INCH/HOUR) =  3.461
  *USER SPECIFIED(SUBAREA):
  RESIDENTIAL (43. DU/AC OR LESS) RUNOFF COEFFICIENT = .8300
  S.C.S. CURVE NUMBER (AMC II) =   0
  AREA-AVERAGE RUNOFF COEFFICIENT = 0.7951
  SUBAREA AREA(ACRES) =    0.70   SUBAREA RUNOFF(CFS) =    2.01
  TOTAL AREA(ACRES) =        6.3   TOTAL RUNOFF(CFS) =      17.34
  TC(MIN.) =    9.94

****************************************************************************
  FLOW PROCESS FROM NODE    382.00 TO NODE    384.00 IS CODE =  31
----------------------------------------------------------------------------
  >>>>>COMPUTE PIPE-FLOW TRAVEL TIME THRU SUBAREA<<<<<
  >>>>>USING COMPUTER-ESTIMATED PIPESIZE (NON-PRESSURE FLOW)<<<<<
============================================================================
  ELEVATION DATA: UPSTREAM(FEET) =   100.00  DOWNSTREAM(FEET) =    99.36
  FLOW LENGTH(FEET) =    64.00   MANNING'S N =  0.013
  DEPTH OF FLOW IN  24.0 INCH PIPE IS  16.3 INCHES
  PIPE-FLOW VELOCITY(FEET/SEC.) =   7.63
  ESTIMATED PIPE DIAMETER(INCH) =  24.00    NUMBER OF PIPES =   1
  PIPE-FLOW(CFS) =      17.34
  PIPE TRAVEL TIME(MIN.) =   0.14    Tc(MIN.) =   10.08
  LONGEST FLOWPATH FROM NODE    367.10 TO NODE    384.00 = ********** FEET.

****************************************************************************
  FLOW PROCESS FROM NODE    384.00 TO NODE    384.00 IS CODE =  81
----------------------------------------------------------------------------
  >>>>>ADDITION OF SUBAREA TO MAINLINE PEAK FLOW<<<<<
============================================================================
   100 YEAR RAINFALL INTENSITY(INCH/HOUR) =  3.441
  *USER SPECIFIED(SUBAREA):
  RESIDENTIAL (43. DU/AC OR LESS) RUNOFF COEFFICIENT = .8300
  S.C.S. CURVE NUMBER (AMC II) =   0
  AREA-AVERAGE RUNOFF COEFFICIENT = 0.7994
```

```
  SUBAREA AREA(ACRES) =    0.90   SUBAREA RUNOFF(CFS) =    2.57
  TOTAL AREA(ACRES) =        7.2   TOTAL RUNOFF(CFS) =      19.81
  TC(MIN.) =   10.08

****************************************************************************
  FLOW PROCESS FROM NODE    385.00 TO NODE    399.00 IS CODE =  31
----------------------------------------------------------------------------
  >>>>>COMPUTE PIPE-FLOW TRAVEL TIME THRU SUBAREA<<<<<
  >>>>>USING COMPUTER-ESTIMATED PIPESIZE (NON-PRESSURE FLOW)<<<<<
============================================================================
  ELEVATION DATA: UPSTREAM(FEET) =   100.00  DOWNSTREAM(FEET) =    98.92
  FLOW LENGTH(FEET) =   108.00   MANNING'S N =  0.013
  DEPTH OF FLOW IN  24.0 INCH PIPE IS  18.1 INCHES
  PIPE-FLOW VELOCITY(FEET/SEC.) =   7.78
  ESTIMATED PIPE DIAMETER(INCH) =  24.00    NUMBER OF PIPES =   1
  PIPE-FLOW(CFS) =      19.81
  PIPE TRAVEL TIME(MIN.) =   0.23    Tc(MIN.) =   10.31
  LONGEST FLOWPATH FROM NODE    367.10 TO NODE    399.00 = ********** FEET.
============================================================================
  END OF STUDY SUMMARY:
  TOTAL AREA(ACRES)     =        7.2  TC(MIN.) =     10.31
  PEAK FLOW RATE(CFS)   =      19.81
============================================================================
============================================================================
  END OF RATIONAL METHOD ANALYSIS
```

```
****************************************************************************

            RATIONAL METHOD HYDROLOGY COMPUTER PROGRAM PACKAGE
            Reference: SAN DIEGO COUNTY FLOOD CONTROL DISTRICT
                         2003,1985,1981 HYDROLOGY MANUAL
         (c) Copyright 1982-2014 Advanced Engineering Software (aes)
             Ver. 21.0 Release Date: 06/01/2014  License ID 1261

                           Analysis prepared by:

                          RICK ENGINEERING COMPANY
                              5620 Friars Road
                        San Diego, California 92110
                      619-291-0707   Fax 619-291-4165

 ************************* DESCRIPTION OF STUDY *************************
* J-15013C SOUTHWEST VILLAGE                                               *
* 100-YEAR, 6-HOUR STORM EVENT                                             *
* BASIN 1400 - MOODY CANYON POST UNDETAINED                                *
 **************************************************************************

  FILE NAME: S1014U00.RAT
  TIME/DATE OF STUDY: 12:08 02/18/2022
----------------------------------------------------------------------------
  USER SPECIFIED HYDROLOGY AND HYDRAULIC MODEL INFORMATION:
----------------------------------------------------------------------------
  USER SPECIFIED STORM EVENT(YEAR) = 100.00
  SPECIFIED MINIMUM PIPE SIZE(INCH) =  18.00
  SPECIFIED PERCENT OF GRADIENTS(DECIMAL) TO USE FOR FRICTION SLOPE = 0.90
  RAINFALL-INTENSITY ADJUSTMENT FACTOR = 1.000
  *USER SPECIFIED:
  NUMBER OF [TIME,INTENSITY] DATA PAIRS =  9
   1)   5.000;  4.400
   2)  10.000;  3.450
   3)  15.000;  2.900
   4)  20.000;  2.500
   5)  25.000;  2.200
   6)  30.000;  2.000
   7)  40.000;  1.700
   8)  50.000;  1.500
   9)  60.000;  1.300
  SAN DIEGO HYDROLOGY MANUAL "C"-VALUES USED FOR RATIONAL METHOD
  NOTE: ONLY PEAK CONFLUENCE VALUES CONSIDERED
  *USER-DEFINED STREET-SECTIONS FOR COUPLED PIPEFLOW AND STREETFLOW MODEL*
     HALF-  CROWN TO   STREET-CROSSFALL:   CURB  GUTTER-GEOMETRIES:  MANNING
     WIDTH  CROSSFALL  IN-  / OUT-/PARK-  HEIGHT  WIDTH  LIP   HIKE  FACTOR
NO.   (FT)     (FT)    SIDE / SIDE/ WAY    (FT)    (FT)  (FT)  (FT)    (n)
===  =====  =========  ================  ======  ===== ====== ===== =======
  1   30.0     20.0    0.018/0.018/0.020   0.67    2.00 0.0313 0.167 0.0150
  2   20.0     15.0    0.020/0.020/0.020   0.50    1.50 0.0100 0.125 0.0180

  GLOBAL STREET FLOW-DEPTH CONSTRAINTS:
    1. Relative Flow-Depth = -0.10 FEET
       as (Maximum Allowable Street Flow Depth) - (Top-of-Curb)
    2. (Depth)*(Velocity) Constraint =  6.0 (FT*FT/S)
  *SIZE PIPE WITH A FLOW CAPACITY GREATER THAN
   OR EQUAL TO THE UPSTREAM TRIBUTARY PIPE.*
```

```
****************************************************************************
  FLOW PROCESS FROM NODE   1400.00 TO NODE   1401.00 IS CODE =  21
----------------------------------------------------------------------------
  >>>>>RATIONAL METHOD INITIAL SUBAREA ANALYSIS<<<<<
============================================================================
  *USER SPECIFIED(SUBAREA):
  RESIDENTIAL (1. DU/AC OR LESS) RUNOFF COEFFICIENT = .7000
  S.C.S. CURVE NUMBER (AMC II) =   0
  INITIAL SUBAREA FLOW-LENGTH(FEET) =   100.00
  UPSTREAM ELEVATION(FEET) =    100.00
  DOWNSTREAM ELEVATION(FEET) =     98.00
  ELEVATION DIFFERENCE(FEET) =      2.00
  URBAN SUBAREA OVERLAND TIME OF FLOW(MIN.) =    5.269
  WARNING: INITIAL SUBAREA FLOW PATH LENGTH IS GREATER THAN
           THE MAXIMUM OVERLAND FLOW LENGTH =    85.00
           (Reference: Table 3-1B of Hydrology Manual)
           THE MAXIMUM OVERLAND FLOW LENGTH IS USED IN Tc CALCULATION!
   100 YEAR RAINFALL INTENSITY(INCH/HOUR) =  4.349
  SUBAREA RUNOFF(CFS) =      0.91
  TOTAL AREA(ACRES) =      0.30   TOTAL RUNOFF(CFS) =      0.91

****************************************************************************
  FLOW PROCESS FROM NODE   1401.00 TO NODE   1402.00 IS CODE =  62
----------------------------------------------------------------------------
  >>>>>COMPUTE STREET FLOW TRAVEL TIME THRU SUBAREA<<<<<
  >>>>>(STREET TABLE SECTION #  2 USED)<<<<<
============================================================================
  UPSTREAM ELEVATION(FEET) =  100.00  DOWNSTREAM ELEVATION(FEET) =   83.00
  STREET LENGTH(FEET) =   850.00   CURB HEIGHT(INCHES) =  6.0
  STREET HALFWIDTH(FEET) = 20.00

  DISTANCE FROM CROWN TO CROSSFALL GRADEBREAK(FEET) =  15.00
  INSIDE STREET CROSSFALL(DECIMAL) =  0.020
  OUTSIDE STREET CROSSFALL(DECIMAL)  =  0.020

  SPECIFIED NUMBER OF HALFSTREETS CARRYING RUNOFF =  2
  STREET PARKWAY CROSSFALL(DECIMAL)  =  0.020
  Manning's FRICTION FACTOR for Streetflow Section(curb-to-curb) =   0.0180
  Manning's FRICTION FACTOR for Back-of-Walk Flow Section =   0.0200

    **TRAVEL TIME COMPUTED USING ESTIMATED FLOW(CFS) =      17.38
    STREETFLOW MODEL RESULTS USING ESTIMATED FLOW:
    STREET FLOW DEPTH(FEET) =  0.42
    HALFSTREET FLOOD WIDTH(FEET) =   15.69
    AVERAGE FLOW VELOCITY(FEET/SEC.) =    3.41
    PRODUCT OF DEPTH&VELOCITY(FT*FT/SEC.) =    1.43
  STREET FLOW TRAVEL TIME(MIN.) =   4.15   Tc(MIN.) =    9.42
   100 YEAR RAINFALL INTENSITY(INCH/HOUR) =  3.560
  *USER SPECIFIED(SUBAREA):
  RESIDENTIAL (1. DU/AC OR LESS) RUNOFF COEFFICIENT = .7000
  S.C.S. CURVE NUMBER (AMC II) =   0
  AREA-AVERAGE RUNOFF COEFFICIENT =  0.700
  SUBAREA AREA(ACRES) =   13.10      SUBAREA RUNOFF(CFS) =   32.64
  TOTAL AREA(ACRES) =       13.4        PEAK FLOW RATE(CFS) =      33.39

  END OF SUBAREA STREET FLOW HYDRAULICS:
  DEPTH(FEET) = 0.51   HALFSTREET FLOOD WIDTH(FEET) =  20.40
```

```
  FLOW VELOCITY(FEET/SEC.) =  4.02   DEPTH*VELOCITY(FT*FT/SEC.) =   2.04
  *NOTE: INITIAL SUBAREA NOMOGRAPH WITH SUBAREA PARAMETERS,
         AND L =  850.0 FT WITH ELEVATION-DROP =  17.0 FT, IS   39.9 CFS,
         WHICH EXCEEDS THE TOP-OF-CURB STREET CAPACITY AT NODE   1402.00
  LONGEST FLOWPATH FROM NODE   1400.00 TO NODE   1402.00 =     950.00 FEET.

****************************************************************************
  FLOW PROCESS FROM NODE   1402.00 TO NODE   1404.00 IS CODE =  51
----------------------------------------------------------------------------
  >>>>>COMPUTE TRAPEZOIDAL CHANNEL FLOW<<<<<
  >>>>>TRAVELTIME THRU SUBAREA (EXISTING ELEMENT)<<<<<
============================================================================
  ELEVATION DATA: UPSTREAM(FEET) =    100.00  DOWNSTREAM(FEET) =     52.50
  CHANNEL LENGTH THRU SUBAREA(FEET) =   950.00   CHANNEL SLOPE =  0.0500
  CHANNEL BASE(FEET) =   10.00   "Z" FACTOR =   4.000
  MANNING'S FACTOR = 0.035   MAXIMUM DEPTH(FEET) =  10.00
   100 YEAR RAINFALL INTENSITY(INCH/HOUR) =  3.225
  *USER SPECIFIED(SUBAREA):
  RESIDENTIAL (1. DU/AC OR LESS) RUNOFF COEFFICIENT = .4800
  S.C.S. CURVE NUMBER (AMC II) =   0
  TRAVEL TIME COMPUTED USING ESTIMATED FLOW(CFS) =      46.85
  TRAVEL TIME THRU SUBAREA BASED ON VELOCITY(FEET/SEC.) =   6.04
  AVERAGE FLOW DEPTH(FEET) =   0.62   TRAVEL TIME(MIN.) =   2.62
  Tc(MIN.) =   12.04
  SUBAREA AREA(ACRES) =    17.30       SUBAREA RUNOFF(CFS) =   26.78
  AREA-AVERAGE RUNOFF COEFFICIENT =  0.576
  TOTAL AREA(ACRES) =       30.7         PEAK FLOW RATE(CFS) =      57.04

  END OF SUBAREA CHANNEL FLOW HYDRAULICS:
  DEPTH(FEET) =  0.69   FLOW VELOCITY(FEET/SEC.) =   6.46
  LONGEST FLOWPATH FROM NODE   1400.00 TO NODE   1404.00 =    1900.00 FEET.

****************************************************************************
  FLOW PROCESS FROM NODE   1404.00 TO NODE   1404.00 IS CODE =  81
----------------------------------------------------------------------------
  >>>>>ADDITION OF SUBAREA TO MAINLINE PEAK FLOW<<<<<
============================================================================
   100 YEAR RAINFALL INTENSITY(INCH/HOUR) =  3.225
  *USER SPECIFIED(SUBAREA):
  RESIDENTIAL (1. DU/AC OR LESS) RUNOFF COEFFICIENT = .8000
  S.C.S. CURVE NUMBER (AMC II) =   0
  AREA-AVERAGE RUNOFF COEFFICIENT = 0.6085
  SUBAREA AREA(ACRES) =    5.20   SUBAREA RUNOFF(CFS) =   13.42
  TOTAL AREA(ACRES) =       35.9   TOTAL RUNOFF(CFS) =      70.45
  TC(MIN.) =   12.04

****************************************************************************
  FLOW PROCESS FROM NODE   1404.00 TO NODE   1405.00 IS CODE =  51
----------------------------------------------------------------------------
  >>>>>COMPUTE TRAPEZOIDAL CHANNEL FLOW<<<<<
  >>>>>TRAVELTIME THRU SUBAREA (EXISTING ELEMENT)<<<<<
============================================================================
  ELEVATION DATA: UPSTREAM(FEET) =    100.00  DOWNSTREAM(FEET) =     43.40
  CHANNEL LENGTH THRU SUBAREA(FEET) =  1415.00   CHANNEL SLOPE =  0.0400
  CHANNEL BASE(FEET) =   10.00   "Z" FACTOR =   4.000
  MANNING'S FACTOR = 0.035   MAXIMUM DEPTH(FEET) =  10.00
   100 YEAR RAINFALL INTENSITY(INCH/HOUR) =  2.859
  *USER SPECIFIED(SUBAREA):
```

```
  RESIDENTIAL (1. DU/AC OR LESS) RUNOFF COEFFICIENT = .4500
  S.C.S. CURVE NUMBER (AMC II) =   0
  TRAVEL TIME COMPUTED USING ESTIMATED FLOW(CFS) =      86.19
  TRAVEL TIME THRU SUBAREA BASED ON VELOCITY(FEET/SEC.) =   6.79
  AVERAGE FLOW DEPTH(FEET) =   0.93   TRAVEL TIME(MIN.) =   3.47
  Tc(MIN.) =   15.51
  SUBAREA AREA(ACRES) =    24.40       SUBAREA RUNOFF(CFS) =   31.39
  AREA-AVERAGE RUNOFF COEFFICIENT =  0.544
  TOTAL AREA(ACRES) =       60.3         PEAK FLOW RATE(CFS) =      93.84

  END OF SUBAREA CHANNEL FLOW HYDRAULICS:
  DEPTH(FEET) =  0.97   FLOW VELOCITY(FEET/SEC.) =   7.01
  LONGEST FLOWPATH FROM NODE   1400.00 TO NODE   1405.00 =    3315.00 FEET.

****************************************************************************
  FLOW PROCESS FROM NODE   1405.00 TO NODE   1405.00 IS CODE =   1
----------------------------------------------------------------------------
  >>>>>DESIGNATE INDEPENDENT STREAM FOR CONFLUENCE<<<<<
============================================================================
  TOTAL NUMBER OF STREAMS =  2
  CONFLUENCE VALUES USED FOR INDEPENDENT STREAM  1 ARE:
  TIME OF CONCENTRATION(MIN.) =   15.51
  RAINFALL INTENSITY(INCH/HR) =   2.86
  TOTAL STREAM AREA(ACRES) =    60.30
  PEAK FLOW RATE(CFS) AT CONFLUENCE =     93.84

****************************************************************************
  FLOW PROCESS FROM NODE    199.00 TO NODE    199.00 IS CODE =   7
----------------------------------------------------------------------------
  >>>>>USER SPECIFIED HYDROLOGY INFORMATION AT NODE<<<<<
============================================================================
  USER-SPECIFIED VALUES ARE AS FOLLOWS:
  TC(MIN) =  12.88   RAIN INTENSITY(INCH/HOUR) =  3.13
  TOTAL AREA(ACRES) =    16.50   TOTAL RUNOFF(CFS) =     29.77

****************************************************************************
  FLOW PROCESS FROM NODE    199.00 TO NODE   1405.00 IS CODE =  51
----------------------------------------------------------------------------
  >>>>>COMPUTE TRAPEZOIDAL CHANNEL FLOW<<<<<
  >>>>>TRAVELTIME THRU SUBAREA (EXISTING ELEMENT)<<<<<
============================================================================
  ELEVATION DATA: UPSTREAM(FEET) =    100.00  DOWNSTREAM(FEET) =     70.00
  CHANNEL LENGTH THRU SUBAREA(FEET) =   750.00   CHANNEL SLOPE =  0.0400
  CHANNEL BASE(FEET) =   10.00   "Z" FACTOR =   4.000
  MANNING'S FACTOR = 0.035   MAXIMUM DEPTH(FEET) =  10.00
   100 YEAR RAINFALL INTENSITY(INCH/HOUR) =  2.884
  *USER SPECIFIED(SUBAREA):
  RESIDENTIAL (1. DU/AC OR LESS) RUNOFF COEFFICIENT = .4500
  S.C.S. CURVE NUMBER (AMC II) =   0
  TRAVEL TIME COMPUTED USING ESTIMATED FLOW(CFS) =      41.87
  TRAVEL TIME THRU SUBAREA BASED ON VELOCITY(FEET/SEC.) =   5.40
  AVERAGE FLOW DEPTH(FEET) =   0.62   TRAVEL TIME(MIN.) =   2.31
  Tc(MIN.) =   15.19
  SUBAREA AREA(ACRES) =    18.60       SUBAREA RUNOFF(CFS) =   24.14
  AREA-AVERAGE RUNOFF COEFFICIENT =  0.509
  TOTAL AREA(ACRES) =       35.1         PEAK FLOW RATE(CFS) =      51.55

  END OF SUBAREA CHANNEL FLOW HYDRAULICS:
```

```
  DEPTH(FEET) =  0.70   FLOW VELOCITY(FEET/SEC.) =   5.78
  LONGEST FLOWPATH FROM NODE      0.00 TO NODE   1405.00 =     750.00 FEET.

****************************************************************************
  FLOW PROCESS FROM NODE   1405.00 TO NODE   1405.00 IS CODE =   1
----------------------------------------------------------------------------
  >>>>>DESIGNATE INDEPENDENT STREAM FOR CONFLUENCE<<<<<
  >>>>>AND COMPUTE VARIOUS CONFLUENCED STREAM VALUES<<<<<
============================================================================
  TOTAL NUMBER OF STREAMS =  2
  CONFLUENCE VALUES USED FOR INDEPENDENT STREAM  2 ARE:
  TIME OF CONCENTRATION(MIN.) =   15.19
  RAINFALL INTENSITY(INCH/HR) =   2.88
  TOTAL STREAM AREA(ACRES) =    35.10
  PEAK FLOW RATE(CFS) AT CONFLUENCE =     51.55

  ** CONFLUENCE DATA **
  STREAM     RUNOFF       Tc      INTENSITY      AREA
  NUMBER      (CFS)     (MIN.)   (INCH/HOUR)    (ACRE)
      1       93.84    15.51        2.859         60.30
      2       51.55    15.19        2.884         35.10

  RAINFALL INTENSITY AND TIME OF CONCENTRATION RATIO
  CONFLUENCE FORMULA USED FOR  2 STREAMS.

  ** PEAK FLOW RATE TABLE **
  STREAM     RUNOFF      Tc      INTENSITY
  NUMBER      (CFS)    (MIN.)   (INCH/HOUR)
      1      143.45    15.19       2.884
      2      144.93    15.51       2.859

  COMPUTED CONFLUENCE ESTIMATES ARE AS FOLLOWS:
  PEAK FLOW RATE(CFS) =     144.93   Tc(MIN.) =   15.51
  TOTAL AREA(ACRES) =       95.4
  LONGEST FLOWPATH FROM NODE   1400.00 TO NODE   1405.00 =    3315.00 FEET.

****************************************************************************
  FLOW PROCESS FROM NODE   1405.00 TO NODE   1410.00 IS CODE =  51
----------------------------------------------------------------------------
  >>>>>COMPUTE TRAPEZOIDAL CHANNEL FLOW<<<<<
  >>>>>TRAVELTIME THRU SUBAREA (EXISTING ELEMENT)<<<<<
============================================================================
  ELEVATION DATA: UPSTREAM(FEET) =    100.00  DOWNSTREAM(FEET) =     81.00
  CHANNEL LENGTH THRU SUBAREA(FEET) =   475.00   CHANNEL SLOPE =  0.0400
  CHANNEL BASE(FEET) =   10.00   "Z" FACTOR =   4.000
  MANNING'S FACTOR = 0.035   MAXIMUM DEPTH(FEET) =  10.00
   100 YEAR RAINFALL INTENSITY(INCH/HOUR) =  2.780
  *USER SPECIFIED(SUBAREA):
  RESIDENTIAL (1. DU/AC OR LESS) RUNOFF COEFFICIENT = .4500
  S.C.S. CURVE NUMBER (AMC II) =   0
  TRAVEL TIME COMPUTED USING ESTIMATED FLOW(CFS) =     148.12
  TRAVEL TIME THRU SUBAREA BASED ON VELOCITY(FEET/SEC.) =   7.99
  AVERAGE FLOW DEPTH(FEET) =   1.24   TRAVEL TIME(MIN.) =   0.99
  Tc(MIN.) =   16.51
  SUBAREA AREA(ACRES) =     5.10       SUBAREA RUNOFF(CFS) =    6.38
  AREA-AVERAGE RUNOFF COEFFICIENT =  0.527
  TOTAL AREA(ACRES) =      100.5         PEAK FLOW RATE(CFS) =     147.29
```

```
  END OF SUBAREA CHANNEL FLOW HYDRAULICS:
  DEPTH(FEET) =  1.23   FLOW VELOCITY(FEET/SEC.) =   8.00
  LONGEST FLOWPATH FROM NODE   1400.00 TO NODE   1410.00 =    3790.00 FEET.

****************************************************************************
  FLOW PROCESS FROM NODE   1410.00 TO NODE   1410.00 IS CODE =   1
----------------------------------------------------------------------------
  >>>>>DESIGNATE INDEPENDENT STREAM FOR CONFLUENCE<<<<<
============================================================================
  TOTAL NUMBER OF STREAMS =  2
  CONFLUENCE VALUES USED FOR INDEPENDENT STREAM  1 ARE:
  TIME OF CONCENTRATION(MIN.) =   16.51
  RAINFALL INTENSITY(INCH/HR) =   2.78
  TOTAL STREAM AREA(ACRES) =   100.50
  PEAK FLOW RATE(CFS) AT CONFLUENCE =    147.29

****************************************************************************
  FLOW PROCESS FROM NODE    299.00 TO NODE    299.00 IS CODE =   7
----------------------------------------------------------------------------
  >>>>>USER SPECIFIED HYDROLOGY INFORMATION AT NODE<<<<<
============================================================================
  USER-SPECIFIED VALUES ARE AS FOLLOWS:
  TC(MIN) =  11.50   RAIN INTENSITY(INCH/HOUR) =  3.29
  TOTAL AREA(ACRES) =    60.70   TOTAL RUNOFF(CFS) =     99.66

****************************************************************************
  FLOW PROCESS FROM NODE    299.00 TO NODE   1410.00 IS CODE =  51
----------------------------------------------------------------------------
  >>>>>COMPUTE TRAPEZOIDAL CHANNEL FLOW<<<<<
  >>>>>TRAVELTIME THRU SUBAREA (EXISTING ELEMENT)<<<<<
============================================================================
  ELEVATION DATA: UPSTREAM(FEET) =    100.00  DOWNSTREAM(FEET) =     58.00
  CHANNEL LENGTH THRU SUBAREA(FEET) =  1050.00   CHANNEL SLOPE =  0.0400
  CHANNEL BASE(FEET) =   10.00   "Z" FACTOR =   4.000
  MANNING'S FACTOR = 0.035   MAXIMUM DEPTH(FEET) =  10.00
   100 YEAR RAINFALL INTENSITY(INCH/HOUR) =  3.024
  *USER SPECIFIED(SUBAREA):
  RESIDENTIAL (1. DU/AC OR LESS) RUNOFF COEFFICIENT = .4500
  S.C.S. CURVE NUMBER (AMC II) =   0
  TRAVEL TIME COMPUTED USING ESTIMATED FLOW(CFS) =     112.05
  TRAVEL TIME THRU SUBAREA BASED ON VELOCITY(FEET/SEC.) =   7.38
  AVERAGE FLOW DEPTH(FEET) =   1.07   TRAVEL TIME(MIN.) =   2.37
  Tc(MIN.) =   13.87
  SUBAREA AREA(ACRES) =    18.20       SUBAREA RUNOFF(CFS) =   24.77
  AREA-AVERAGE RUNOFF COEFFICIENT =  0.488
  TOTAL AREA(ACRES) =       78.9         PEAK FLOW RATE(CFS) =     116.51

  END OF SUBAREA CHANNEL FLOW HYDRAULICS:
  DEPTH(FEET) =  1.09   FLOW VELOCITY(FEET/SEC.) =   7.46
  LONGEST FLOWPATH FROM NODE      0.00 TO NODE   1410.00 =    1800.00 FEET.

****************************************************************************
  FLOW PROCESS FROM NODE   1410.00 TO NODE   1410.00 IS CODE =   1
----------------------------------------------------------------------------
  >>>>>DESIGNATE INDEPENDENT STREAM FOR CONFLUENCE<<<<<
  >>>>>AND COMPUTE VARIOUS CONFLUENCED STREAM VALUES<<<<<
============================================================================
  TOTAL NUMBER OF STREAMS =  2
```

```
  CONFLUENCE VALUES USED FOR INDEPENDENT STREAM  2 ARE:
  TIME OF CONCENTRATION(MIN.) =   13.87
  RAINFALL INTENSITY(INCH/HR) =   3.02
  TOTAL STREAM AREA(ACRES) =    78.90
  PEAK FLOW RATE(CFS) AT CONFLUENCE =    116.51

  ** CONFLUENCE DATA **
  STREAM     RUNOFF       Tc      INTENSITY      AREA
  NUMBER      (CFS)     (MIN.)   (INCH/HOUR)    (ACRE)
      1      147.29    16.51        2.780        100.50
      2      116.51    13.87        3.024         78.90

  RAINFALL INTENSITY AND TIME OF CONCENTRATION RATIO
  CONFLUENCE FORMULA USED FOR  2 STREAMS.

  ** PEAK FLOW RATE TABLE **
  STREAM     RUNOFF      Tc      INTENSITY
  NUMBER      (CFS)    (MIN.)   (INCH/HOUR)
      1      251.89    13.87       3.024
      2      254.38    16.51       2.780

  COMPUTED CONFLUENCE ESTIMATES ARE AS FOLLOWS:
  PEAK FLOW RATE(CFS) =     254.38   Tc(MIN.) =   16.51
  TOTAL AREA(ACRES) =      179.4
  LONGEST FLOWPATH FROM NODE   1400.00 TO NODE   1410.00 =    3790.00 FEET.

****************************************************************************
  FLOW PROCESS FROM NODE   1410.00 TO NODE   1420.00 IS CODE =  51
----------------------------------------------------------------------------
  >>>>>COMPUTE TRAPEZOIDAL CHANNEL FLOW<<<<<
  >>>>>TRAVELTIME THRU SUBAREA (EXISTING ELEMENT)<<<<<
============================================================================
  ELEVATION DATA: UPSTREAM(FEET) =    100.00  DOWNSTREAM(FEET) =     60.00
  CHANNEL LENGTH THRU SUBAREA(FEET) =  1000.00   CHANNEL SLOPE =  0.0400
  CHANNEL BASE(FEET) =   10.00   "Z" FACTOR =   4.000
  MANNING'S FACTOR = 0.035   MAXIMUM DEPTH(FEET) =  10.00
   100 YEAR RAINFALL INTENSITY(INCH/HOUR) =  2.638
  *USER SPECIFIED(SUBAREA):
  RESIDENTIAL (1. DU/AC OR LESS) RUNOFF COEFFICIENT = .4500
  S.C.S. CURVE NUMBER (AMC II) =   0
  TRAVEL TIME COMPUTED USING ESTIMATED FLOW(CFS) =     263.88
  TRAVEL TIME THRU SUBAREA BASED ON VELOCITY(FEET/SEC.) =   9.44
  AVERAGE FLOW DEPTH(FEET) =   1.67   TRAVEL TIME(MIN.) =   1.76
  Tc(MIN.) =   18.27
  SUBAREA AREA(ACRES) =    16.00       SUBAREA RUNOFF(CFS) =   19.00
  AREA-AVERAGE RUNOFF COEFFICIENT =  0.505
  TOTAL AREA(ACRES) =      195.4         PEAK FLOW RATE(CFS) =     260.46

  END OF SUBAREA CHANNEL FLOW HYDRAULICS:
  DEPTH(FEET) =  1.66   FLOW VELOCITY(FEET/SEC.) =   9.43
  LONGEST FLOWPATH FROM NODE   1400.00 TO NODE   1420.00 =    4790.00 FEET.

****************************************************************************
  FLOW PROCESS FROM NODE   1420.00 TO NODE   1420.00 IS CODE =   1
----------------------------------------------------------------------------
  >>>>>DESIGNATE INDEPENDENT STREAM FOR CONFLUENCE<<<<<
============================================================================
  TOTAL NUMBER OF STREAMS =  2
```

```
  CONFLUENCE VALUES USED FOR INDEPENDENT STREAM  1 ARE:
  TIME OF CONCENTRATION(MIN.) =   18.27
  RAINFALL INTENSITY(INCH/HR) =   2.64
  TOTAL STREAM AREA(ACRES) =   195.40
  PEAK FLOW RATE(CFS) AT CONFLUENCE =    260.46

****************************************************************************
  FLOW PROCESS FROM NODE   1416.00 TO NODE   1417.00 IS CODE =  21
----------------------------------------------------------------------------
  >>>>>RATIONAL METHOD INITIAL SUBAREA ANALYSIS<<<<<
============================================================================
  *USER SPECIFIED(SUBAREA):
  RESIDENTIAL (1. DU/AC OR LESS) RUNOFF COEFFICIENT = .4500
  S.C.S. CURVE NUMBER (AMC II) =   0
  INITIAL SUBAREA FLOW-LENGTH(FEET) =   100.00
  UPSTREAM ELEVATION(FEET) =    100.00
  DOWNSTREAM ELEVATION(FEET) =     98.00
  ELEVATION DIFFERENCE(FEET) =      2.00
  URBAN SUBAREA OVERLAND TIME OF FLOW(MIN.) =    8.562
  WARNING: INITIAL SUBAREA FLOW PATH LENGTH IS GREATER THAN
           THE MAXIMUM OVERLAND FLOW LENGTH =    85.00
           (Reference: Table 3-1B of Hydrology Manual)
           THE MAXIMUM OVERLAND FLOW LENGTH IS USED IN Tc CALCULATION!
   100 YEAR RAINFALL INTENSITY(INCH/HOUR) =  3.723
  SUBAREA RUNOFF(CFS) =      0.17
  TOTAL AREA(ACRES) =      0.10   TOTAL RUNOFF(CFS) =      0.17

****************************************************************************
  FLOW PROCESS FROM NODE   1417.00 TO NODE   1418.00 IS CODE =  51
----------------------------------------------------------------------------
  >>>>>COMPUTE TRAPEZOIDAL CHANNEL FLOW<<<<<
  >>>>>TRAVELTIME THRU SUBAREA (EXISTING ELEMENT)<<<<<
============================================================================
  ELEVATION DATA: UPSTREAM(FEET) =    100.00  DOWNSTREAM(FEET) =     54.40
  CHANNEL LENGTH THRU SUBAREA(FEET) =   760.00   CHANNEL SLOPE =  0.0600
  CHANNEL BASE(FEET) =    2.00   "Z" FACTOR =   0.000
  MANNING'S FACTOR = 0.016   MAXIMUM DEPTH(FEET) =   2.00
   100 YEAR RAINFALL INTENSITY(INCH/HOUR) =  3.336
  *USER SPECIFIED(SUBAREA):
  RESIDENTIAL (1. DU/AC OR LESS) RUNOFF COEFFICIENT = .4500
  S.C.S. CURVE NUMBER (AMC II) =   0
  TRAVEL TIME COMPUTED USING ESTIMATED FLOW(CFS) =       1.22
  TRAVEL TIME THRU SUBAREA BASED ON VELOCITY(FEET/SEC.) =   5.12
  AVERAGE FLOW DEPTH(FEET) =   0.12   TRAVEL TIME(MIN.) =   2.47
  Tc(MIN.) =   11.03
  SUBAREA AREA(ACRES) =     1.40       SUBAREA RUNOFF(CFS) =    2.10
  AREA-AVERAGE RUNOFF COEFFICIENT =  0.450
  TOTAL AREA(ACRES) =        1.5         PEAK FLOW RATE(CFS) =       2.25

  END OF SUBAREA CHANNEL FLOW HYDRAULICS:
  DEPTH(FEET) =  0.18   FLOW VELOCITY(FEET/SEC.) =   6.31
  LONGEST FLOWPATH FROM NODE   1416.00 TO NODE   1418.00 =     860.00 FEET.

****************************************************************************
  FLOW PROCESS FROM NODE   1418.00 TO NODE   1420.00 IS CODE =  51
----------------------------------------------------------------------------
  >>>>>COMPUTE TRAPEZOIDAL CHANNEL FLOW<<<<<
  >>>>>TRAVELTIME THRU SUBAREA (EXISTING ELEMENT)<<<<<
```

```
============================================================================
  ELEVATION DATA: UPSTREAM(FEET) =    100.00  DOWNSTREAM(FEET) =     51.00
  CHANNEL LENGTH THRU SUBAREA(FEET) =   490.00   CHANNEL SLOPE =  0.1000
  CHANNEL BASE(FEET) =   10.00   "Z" FACTOR =   4.000
  MANNING'S FACTOR = 0.035   MAXIMUM DEPTH(FEET) =  10.00
   100 YEAR RAINFALL INTENSITY(INCH/HOUR) =  3.043
  *USER SPECIFIED(SUBAREA):
  RESIDENTIAL (1. DU/AC OR LESS) RUNOFF COEFFICIENT = .4500
  S.C.S. CURVE NUMBER (AMC II) =   0
  TRAVEL TIME COMPUTED USING ESTIMATED FLOW(CFS) =       3.76
  TRAVEL TIME THRU SUBAREA BASED ON VELOCITY(FEET/SEC.) =   3.06
  AVERAGE FLOW DEPTH(FEET) =   0.12   TRAVEL TIME(MIN.) =   2.67
  Tc(MIN.) =   13.70
  SUBAREA AREA(ACRES) =     2.20       SUBAREA RUNOFF(CFS) =    3.01
  AREA-AVERAGE RUNOFF COEFFICIENT =  0.450
  TOTAL AREA(ACRES) =        3.7         PEAK FLOW RATE(CFS) =       5.07

  END OF SUBAREA CHANNEL FLOW HYDRAULICS:
  DEPTH(FEET) =  0.14   FLOW VELOCITY(FEET/SEC.) =   3.42
  LONGEST FLOWPATH FROM NODE   1416.00 TO NODE   1420.00 =    1350.00 FEET.

****************************************************************************
  FLOW PROCESS FROM NODE   1420.00 TO NODE   1420.00 IS CODE =   1
----------------------------------------------------------------------------
  >>>>>DESIGNATE INDEPENDENT STREAM FOR CONFLUENCE<<<<<
  >>>>>AND COMPUTE VARIOUS CONFLUENCED STREAM VALUES<<<<<
============================================================================
  TOTAL NUMBER OF STREAMS =  2
  CONFLUENCE VALUES USED FOR INDEPENDENT STREAM  2 ARE:
  TIME OF CONCENTRATION(MIN.) =   13.70
  RAINFALL INTENSITY(INCH/HR) =   3.04
  TOTAL STREAM AREA(ACRES) =     3.70
  PEAK FLOW RATE(CFS) AT CONFLUENCE =      5.07

  ** CONFLUENCE DATA **
  STREAM     RUNOFF       Tc      INTENSITY      AREA
  NUMBER      (CFS)     (MIN.)   (INCH/HOUR)    (ACRE)
      1      260.46    18.27        2.638        195.40
      2        5.07    13.70        3.043          3.70

  RAINFALL INTENSITY AND TIME OF CONCENTRATION RATIO
  CONFLUENCE FORMULA USED FOR  2 STREAMS.

  ** PEAK FLOW RATE TABLE **
  STREAM     RUNOFF      Tc      INTENSITY
  NUMBER      (CFS)    (MIN.)   (INCH/HOUR)
      1      230.91    13.70       3.043
      2      264.85    18.27       2.638

  COMPUTED CONFLUENCE ESTIMATES ARE AS FOLLOWS:
  PEAK FLOW RATE(CFS) =     264.85   Tc(MIN.) =   18.27
  TOTAL AREA(ACRES) =      199.1
  LONGEST FLOWPATH FROM NODE   1400.00 TO NODE   1420.00 =    4790.00 FEET.

****************************************************************************
  FLOW PROCESS FROM NODE   1420.00 TO NODE   1430.00 IS CODE =  51
----------------------------------------------------------------------------
  >>>>>COMPUTE TRAPEZOIDAL CHANNEL FLOW<<<<<
```

```
  >>>>>TRAVELTIME THRU SUBAREA (EXISTING ELEMENT)<<<<<
============================================================================
  ELEVATION DATA: UPSTREAM(FEET) =    100.00  DOWNSTREAM(FEET) =      0.00
  CHANNEL LENGTH THRU SUBAREA(FEET) =  2500.00   CHANNEL SLOPE =  0.0400
  CHANNEL BASE(FEET) =   10.00   "Z" FACTOR =   4.000
  MANNING'S FACTOR = 0.035   MAXIMUM DEPTH(FEET) =  10.00
   100 YEAR RAINFALL INTENSITY(INCH/HOUR) =  2.348
  *USER SPECIFIED(SUBAREA):
  RESIDENTIAL (1. DU/AC OR LESS) RUNOFF COEFFICIENT = .4500
  S.C.S. CURVE NUMBER (AMC II) =   0
  TRAVEL TIME COMPUTED USING ESTIMATED FLOW(CFS) =     299.76
  TRAVEL TIME THRU SUBAREA BASED ON VELOCITY(FEET/SEC.) =   9.77
  AVERAGE FLOW DEPTH(FEET) =   1.79   TRAVEL TIME(MIN.) =   4.26
  Tc(MIN.) =   22.53
  SUBAREA AREA(ACRES) =    66.00       SUBAREA RUNOFF(CFS) =   69.74
  AREA-AVERAGE RUNOFF COEFFICIENT =  0.491
  TOTAL AREA(ACRES) =      265.1         PEAK FLOW RATE(CFS) =     305.44

  END OF SUBAREA CHANNEL FLOW HYDRAULICS:
  DEPTH(FEET) =  1.80   FLOW VELOCITY(FEET/SEC.) =   9.84
  LONGEST FLOWPATH FROM NODE   1400.00 TO NODE   1430.00 =    7290.00 FEET.

****************************************************************************
  FLOW PROCESS FROM NODE   1430.00 TO NODE   1430.00 IS CODE =   1
----------------------------------------------------------------------------
  >>>>>DESIGNATE INDEPENDENT STREAM FOR CONFLUENCE<<<<<
============================================================================
  TOTAL NUMBER OF STREAMS =  2
  CONFLUENCE VALUES USED FOR INDEPENDENT STREAM  1 ARE:
  TIME OF CONCENTRATION(MIN.) =   22.53
  RAINFALL INTENSITY(INCH/HR) =   2.35
  TOTAL STREAM AREA(ACRES) =   265.10
  PEAK FLOW RATE(CFS) AT CONFLUENCE =    305.44

****************************************************************************
  FLOW PROCESS FROM NODE   1427.00 TO NODE   1428.00 IS CODE =  21
----------------------------------------------------------------------------
  >>>>>RATIONAL METHOD INITIAL SUBAREA ANALYSIS<<<<<
============================================================================
  *USER SPECIFIED(SUBAREA):
  RESIDENTIAL (1. DU/AC OR LESS) RUNOFF COEFFICIENT = .4500
  S.C.S. CURVE NUMBER (AMC II) =   0
  INITIAL SUBAREA FLOW-LENGTH(FEET) =   100.00
  UPSTREAM ELEVATION(FEET) =    100.00
  DOWNSTREAM ELEVATION(FEET) =     98.00
  ELEVATION DIFFERENCE(FEET) =      2.00
  URBAN SUBAREA OVERLAND TIME OF FLOW(MIN.) =    8.562
  WARNING: INITIAL SUBAREA FLOW PATH LENGTH IS GREATER THAN
           THE MAXIMUM OVERLAND FLOW LENGTH =    85.00
           (Reference: Table 3-1B of Hydrology Manual)
           THE MAXIMUM OVERLAND FLOW LENGTH IS USED IN Tc CALCULATION!
   100 YEAR RAINFALL INTENSITY(INCH/HOUR) =  3.723
  SUBAREA RUNOFF(CFS) =      0.17
  TOTAL AREA(ACRES) =      0.10   TOTAL RUNOFF(CFS) =      0.17

****************************************************************************
  FLOW PROCESS FROM NODE   1428.00 TO NODE   1429.00 IS CODE =  51
----------------------------------------------------------------------------
```

```
  >>>>>COMPUTE TRAPEZOIDAL CHANNEL FLOW<<<<<
  >>>>>TRAVELTIME THRU SUBAREA (EXISTING ELEMENT)<<<<<
============================================================================
  ELEVATION DATA: UPSTREAM(FEET) =    200.00  DOWNSTREAM(FEET) =     56.00
  CHANNEL LENGTH THRU SUBAREA(FEET) =  2400.00   CHANNEL SLOPE =  0.0600
  CHANNEL BASE(FEET) =    2.00   "Z" FACTOR =   0.000
  MANNING'S FACTOR = 0.016   MAXIMUM DEPTH(FEET) =   4.00
   100 YEAR RAINFALL INTENSITY(INCH/HOUR) =  3.020
  *USER SPECIFIED(SUBAREA):
  RESIDENTIAL (1. DU/AC OR LESS) RUNOFF COEFFICIENT = .4500
  S.C.S. CURVE NUMBER (AMC II) =   0
  TRAVEL TIME COMPUTED USING ESTIMATED FLOW(CFS) =       3.47
  TRAVEL TIME THRU SUBAREA BASED ON VELOCITY(FEET/SEC.) =   7.49
  AVERAGE FLOW DEPTH(FEET) =   0.23   TRAVEL TIME(MIN.) =   5.34
  Tc(MIN.) =   13.91
  SUBAREA AREA(ACRES) =     4.80       SUBAREA RUNOFF(CFS) =    6.52
  AREA-AVERAGE RUNOFF COEFFICIENT =  0.450
  TOTAL AREA(ACRES) =        4.9         PEAK FLOW RATE(CFS) =       6.66

  END OF SUBAREA CHANNEL FLOW HYDRAULICS:
  DEPTH(FEET) =  0.36   FLOW VELOCITY(FEET/SEC.) =   9.36
  LONGEST FLOWPATH FROM NODE   1427.00 TO NODE   1429.00 =    2500.00 FEET.

****************************************************************************
  FLOW PROCESS FROM NODE   1429.00 TO NODE   1430.00 IS CODE =  31
----------------------------------------------------------------------------
  >>>>>COMPUTE PIPE-FLOW TRAVEL TIME THRU SUBAREA<<<<<
  >>>>>USING COMPUTER-ESTIMATED PIPESIZE (NON-PRESSURE FLOW)<<<<<
============================================================================
  ELEVATION DATA: UPSTREAM(FEET) =   100.00  DOWNSTREAM(FEET) =    96.25
  FLOW LENGTH(FEET) =    75.00   MANNING'S N =  0.013
  ESTIMATED PIPE DIAMETER(INCH) INCREASED TO 18.000
  DEPTH OF FLOW IN  18.0 INCH PIPE IS   6.7 INCHES
  PIPE-FLOW VELOCITY(FEET/SEC.) =  11.03
  ESTIMATED PIPE DIAMETER(INCH) =  18.00    NUMBER OF PIPES =   1
  PIPE-FLOW(CFS) =       6.66
  PIPE TRAVEL TIME(MIN.) =   0.11    Tc(MIN.) =   14.02
  LONGEST FLOWPATH FROM NODE   1427.00 TO NODE   1430.00 =    2575.00 FEET.

****************************************************************************
  FLOW PROCESS FROM NODE   1430.00 TO NODE   1430.00 IS CODE =   1
----------------------------------------------------------------------------
  >>>>>DESIGNATE INDEPENDENT STREAM FOR CONFLUENCE<<<<<
  >>>>>AND COMPUTE VARIOUS CONFLUENCED STREAM VALUES<<<<<
============================================================================
  TOTAL NUMBER OF STREAMS =  2
  CONFLUENCE VALUES USED FOR INDEPENDENT STREAM  2 ARE:
  TIME OF CONCENTRATION(MIN.) =   14.02
  RAINFALL INTENSITY(INCH/HR) =   3.01
  TOTAL STREAM AREA(ACRES) =     4.90
  PEAK FLOW RATE(CFS) AT CONFLUENCE =      6.66

  ** CONFLUENCE DATA **
  STREAM     RUNOFF       Tc      INTENSITY      AREA
  NUMBER      (CFS)     (MIN.)   (INCH/HOUR)    (ACRE)
      1      305.44    22.53        2.348        265.10
      2        6.66    14.02        3.008          4.90
```

```
  RAINFALL INTENSITY AND TIME OF CONCENTRATION RATIO
  CONFLUENCE FORMULA USED FOR  2 STREAMS.

  ** PEAK FLOW RATE TABLE **
  STREAM     RUNOFF      Tc      INTENSITY
  NUMBER      (CFS)    (MIN.)   (INCH/HOUR)
      1      245.08    14.02       3.008
      2      310.63    22.53       2.348

  COMPUTED CONFLUENCE ESTIMATES ARE AS FOLLOWS:
  PEAK FLOW RATE(CFS) =     310.63   Tc(MIN.) =   22.53
  TOTAL AREA(ACRES) =      270.0
  LONGEST FLOWPATH FROM NODE   1400.00 TO NODE   1430.00 =    7290.00 FEET.

****************************************************************************
  FLOW PROCESS FROM NODE   1430.00 TO NODE   1498.00 IS CODE =  31
----------------------------------------------------------------------------
  >>>>>COMPUTE PIPE-FLOW TRAVEL TIME THRU SUBAREA<<<<<
  >>>>>USING COMPUTER-ESTIMATED PIPESIZE (NON-PRESSURE FLOW)<<<<<
============================================================================
  ELEVATION DATA: UPSTREAM(FEET) =   100.00  DOWNSTREAM(FEET) =    98.70
  FLOW LENGTH(FEET) =    65.00   MANNING'S N =  0.013
  DEPTH OF FLOW IN  60.0 INCH PIPE IS  44.0 INCHES
  PIPE-FLOW VELOCITY(FEET/SEC.) =  20.15
  ESTIMATED PIPE DIAMETER(INCH) =  60.00    NUMBER OF PIPES =   1
  PIPE-FLOW(CFS) =     310.63
  PIPE TRAVEL TIME(MIN.) =   0.05    Tc(MIN.) =   22.59
  LONGEST FLOWPATH FROM NODE   1400.00 TO NODE   1498.00 =    7355.00 FEET.

****************************************************************************
  FLOW PROCESS FROM NODE   1498.00 TO NODE   1498.00 IS CODE =   1
----------------------------------------------------------------------------
  >>>>>DESIGNATE INDEPENDENT STREAM FOR CONFLUENCE<<<<<
============================================================================
  TOTAL NUMBER OF STREAMS =  2
  CONFLUENCE VALUES USED FOR INDEPENDENT STREAM  1 ARE:
  TIME OF CONCENTRATION(MIN.) =   22.59
  RAINFALL INTENSITY(INCH/HR) =   2.34
  TOTAL STREAM AREA(ACRES) =   270.00
  PEAK FLOW RATE(CFS) AT CONFLUENCE =    310.63

****************************************************************************
  FLOW PROCESS FROM NODE   1450.00 TO NODE   1451.00 IS CODE =  21
----------------------------------------------------------------------------
  >>>>>RATIONAL METHOD INITIAL SUBAREA ANALYSIS<<<<<
============================================================================
  *USER SPECIFIED(SUBAREA):
  RESIDENTIAL (1. DU/AC OR LESS) RUNOFF COEFFICIENT = .4500
  S.C.S. CURVE NUMBER (AMC II) =   0
  INITIAL SUBAREA FLOW-LENGTH(FEET) =   100.00
  UPSTREAM ELEVATION(FEET) =    100.00
  DOWNSTREAM ELEVATION(FEET) =     98.00
  ELEVATION DIFFERENCE(FEET) =      2.00
  URBAN SUBAREA OVERLAND TIME OF FLOW(MIN.) =    8.562
  WARNING: INITIAL SUBAREA FLOW PATH LENGTH IS GREATER THAN
           THE MAXIMUM OVERLAND FLOW LENGTH =    85.00
           (Reference: Table 3-1B of Hydrology Manual)
           THE MAXIMUM OVERLAND FLOW LENGTH IS USED IN Tc CALCULATION!
```

```
   100 YEAR RAINFALL INTENSITY(INCH/HOUR) =  3.723
  SUBAREA RUNOFF(CFS) =      0.17
  TOTAL AREA(ACRES) =      0.10   TOTAL RUNOFF(CFS) =      0.17

****************************************************************************
  FLOW PROCESS FROM NODE   1451.00 TO NODE   1453.00 IS CODE =  51
----------------------------------------------------------------------------
  >>>>>COMPUTE TRAPEZOIDAL CHANNEL FLOW<<<<<
  >>>>>TRAVELTIME THRU SUBAREA (EXISTING ELEMENT)<<<<<
============================================================================
  ELEVATION DATA: UPSTREAM(FEET) =    100.00  DOWNSTREAM(FEET) =     43.00
  CHANNEL LENGTH THRU SUBAREA(FEET) =   950.00   CHANNEL SLOPE =  0.0600
  CHANNEL BASE(FEET) =    2.00   "Z" FACTOR =   0.000
  MANNING'S FACTOR = 0.016   MAXIMUM DEPTH(FEET) =   4.00
   100 YEAR RAINFALL INTENSITY(INCH/HOUR) =  3.319
  *USER SPECIFIED(SUBAREA):
  RESIDENTIAL (1. DU/AC OR LESS) RUNOFF COEFFICIENT = .4500
  S.C.S. CURVE NUMBER (AMC II) =   0
  TRAVEL TIME COMPUTED USING ESTIMATED FLOW(CFS) =       1.97
  TRAVEL TIME THRU SUBAREA BASED ON VELOCITY(FEET/SEC.) =   6.03
  AVERAGE FLOW DEPTH(FEET) =   0.16   TRAVEL TIME(MIN.) =   2.63
  Tc(MIN.) =   11.19
  SUBAREA AREA(ACRES) =     2.40       SUBAREA RUNOFF(CFS) =    3.58
  AREA-AVERAGE RUNOFF COEFFICIENT =  0.450
  TOTAL AREA(ACRES) =        2.5         PEAK FLOW RATE(CFS) =       3.73

  END OF SUBAREA CHANNEL FLOW HYDRAULICS:
  DEPTH(FEET) =  0.24   FLOW VELOCITY(FEET/SEC.) =   7.74
  LONGEST FLOWPATH FROM NODE   1450.00 TO NODE   1453.00 =    1050.00 FEET.

****************************************************************************
  FLOW PROCESS FROM NODE   1453.00 TO NODE   1453.00 IS CODE =  81
----------------------------------------------------------------------------
  >>>>>ADDITION OF SUBAREA TO MAINLINE PEAK FLOW<<<<<
============================================================================
   100 YEAR RAINFALL INTENSITY(INCH/HOUR) =  3.319
  *USER SPECIFIED(SUBAREA):
  RESIDENTIAL (1. DU/AC OR LESS) RUNOFF COEFFICIENT = .4500
  S.C.S. CURVE NUMBER (AMC II) =   0
  AREA-AVERAGE RUNOFF COEFFICIENT = 0.4500
  SUBAREA AREA(ACRES) =    2.30   SUBAREA RUNOFF(CFS) =    3.44
  TOTAL AREA(ACRES) =        4.8   TOTAL RUNOFF(CFS) =       7.17
  TC(MIN.) =   11.19

****************************************************************************
  FLOW PROCESS FROM NODE   1453.00 TO NODE   1454.00 IS CODE =  51
----------------------------------------------------------------------------
  >>>>>COMPUTE TRAPEZOIDAL CHANNEL FLOW<<<<<
  >>>>>TRAVELTIME THRU SUBAREA (EXISTING ELEMENT)<<<<<
============================================================================
  ELEVATION DATA: UPSTREAM(FEET) =    100.00  DOWNSTREAM(FEET) =     25.00
  CHANNEL LENGTH THRU SUBAREA(FEET) =  1250.00   CHANNEL SLOPE =  0.0600
  CHANNEL BASE(FEET) =    2.00   "Z" FACTOR =   0.000
  MANNING'S FACTOR = 0.016   MAXIMUM DEPTH(FEET) =   4.00
   100 YEAR RAINFALL INTENSITY(INCH/HOUR) =  3.101
  *USER SPECIFIED(SUBAREA):
  RESIDENTIAL (1. DU/AC OR LESS) RUNOFF COEFFICIENT = .4500
  S.C.S. CURVE NUMBER (AMC II) =   0
```

```
  TRAVEL TIME COMPUTED USING ESTIMATED FLOW(CFS) =       9.54
  TRAVEL TIME THRU SUBAREA BASED ON VELOCITY(FEET/SEC.) =  10.49
  AVERAGE FLOW DEPTH(FEET) =   0.45   TRAVEL TIME(MIN.) =   1.99
  Tc(MIN.) =   13.17
  SUBAREA AREA(ACRES) =     3.40       SUBAREA RUNOFF(CFS) =    4.74
  AREA-AVERAGE RUNOFF COEFFICIENT =  0.450
  TOTAL AREA(ACRES) =        8.2         PEAK FLOW RATE(CFS) =      11.44

  END OF SUBAREA CHANNEL FLOW HYDRAULICS:
  DEPTH(FEET) =  0.52   FLOW VELOCITY(FEET/SEC.) =  11.09
  LONGEST FLOWPATH FROM NODE   1450.00 TO NODE   1454.00 =    2300.00 FEET.

****************************************************************************
  FLOW PROCESS FROM NODE   1454.00 TO NODE   1454.00 IS CODE =  81
----------------------------------------------------------------------------
  >>>>>ADDITION OF SUBAREA TO MAINLINE PEAK FLOW<<<<<
============================================================================
   100 YEAR RAINFALL INTENSITY(INCH/HOUR) =  3.101
  *USER SPECIFIED(SUBAREA):
  RESIDENTIAL (1. DU/AC OR LESS) RUNOFF COEFFICIENT = .4500
  S.C.S. CURVE NUMBER (AMC II) =   0
  AREA-AVERAGE RUNOFF COEFFICIENT = 0.4500
  SUBAREA AREA(ACRES) =    4.90   SUBAREA RUNOFF(CFS) =    6.84
  TOTAL AREA(ACRES) =       13.1   TOTAL RUNOFF(CFS) =      18.28
  TC(MIN.) =   13.17

****************************************************************************
  FLOW PROCESS FROM NODE   1454.00 TO NODE   1455.00 IS CODE =  51
----------------------------------------------------------------------------
  >>>>>COMPUTE TRAPEZOIDAL CHANNEL FLOW<<<<<
  >>>>>TRAVELTIME THRU SUBAREA (EXISTING ELEMENT)<<<<<
============================================================================
  ELEVATION DATA: UPSTREAM(FEET) =    100.00  DOWNSTREAM(FEET) =     37.00
  CHANNEL LENGTH THRU SUBAREA(FEET) =  1050.00   CHANNEL SLOPE =  0.0600
  CHANNEL BASE(FEET) =    2.00   "Z" FACTOR =   0.000
  MANNING'S FACTOR = 0.016   MAXIMUM DEPTH(FEET) =   4.00
   100 YEAR RAINFALL INTENSITY(INCH/HOUR) =  2.952
  *USER SPECIFIED(SUBAREA):
  RESIDENTIAL (1. DU/AC OR LESS) RUNOFF COEFFICIENT = .4500
  S.C.S. CURVE NUMBER (AMC II) =   0
  TRAVEL TIME COMPUTED USING ESTIMATED FLOW(CFS) =      19.48
  TRAVEL TIME THRU SUBAREA BASED ON VELOCITY(FEET/SEC.) =  12.94
  AVERAGE FLOW DEPTH(FEET) =   0.75   TRAVEL TIME(MIN.) =   1.35
  Tc(MIN.) =   14.53
  SUBAREA AREA(ACRES) =     1.80       SUBAREA RUNOFF(CFS) =    2.39
  AREA-AVERAGE RUNOFF COEFFICIENT =  0.450
  TOTAL AREA(ACRES) =       14.9         PEAK FLOW RATE(CFS) =      19.79

  END OF SUBAREA CHANNEL FLOW HYDRAULICS:
  DEPTH(FEET) =  0.76   FLOW VELOCITY(FEET/SEC.) =  13.02
  LONGEST FLOWPATH FROM NODE   1450.00 TO NODE   1455.00 =    3350.00 FEET.

****************************************************************************
  FLOW PROCESS FROM NODE   1455.00 TO NODE   1455.00 IS CODE =  81
----------------------------------------------------------------------------
  >>>>>ADDITION OF SUBAREA TO MAINLINE PEAK FLOW<<<<<
============================================================================
   100 YEAR RAINFALL INTENSITY(INCH/HOUR) =  2.952
```

```
  *USER SPECIFIED(SUBAREA):
  RESIDENTIAL (1. DU/AC OR LESS) RUNOFF COEFFICIENT = .4500
  S.C.S. CURVE NUMBER (AMC II) =   0
  AREA-AVERAGE RUNOFF COEFFICIENT = 0.4500
  SUBAREA AREA(ACRES) =    0.20   SUBAREA RUNOFF(CFS) =    0.27
  TOTAL AREA(ACRES) =       15.1   TOTAL RUNOFF(CFS) =      20.06
  TC(MIN.) =   14.53

****************************************************************************
  FLOW PROCESS FROM NODE   1455.00 TO NODE   1498.00 IS CODE =  31
----------------------------------------------------------------------------
  >>>>>COMPUTE PIPE-FLOW TRAVEL TIME THRU SUBAREA<<<<<
  >>>>>USING COMPUTER-ESTIMATED PIPESIZE (NON-PRESSURE FLOW)<<<<<
============================================================================
  ELEVATION DATA: UPSTREAM(FEET) =   100.00  DOWNSTREAM(FEET) =    71.50
  FLOW LENGTH(FEET) =    60.00   MANNING'S N =  0.013
  ESTIMATED PIPE DIAMETER(INCH) INCREASED TO 18.000
  DEPTH OF FLOW IN  18.0 INCH PIPE IS   6.7 INCHES
  PIPE-FLOW VELOCITY(FEET/SEC.) =  33.78
  ESTIMATED PIPE DIAMETER(INCH) =  18.00    NUMBER OF PIPES =   1
  PIPE-FLOW(CFS) =      20.06
  PIPE TRAVEL TIME(MIN.) =   0.03    Tc(MIN.) =   14.56
  LONGEST FLOWPATH FROM NODE   1450.00 TO NODE   1498.00 =    3410.00 FEET.

****************************************************************************
  FLOW PROCESS FROM NODE   1498.00 TO NODE   1498.00 IS CODE =   1
----------------------------------------------------------------------------
  >>>>>DESIGNATE INDEPENDENT STREAM FOR CONFLUENCE<<<<<
  >>>>>AND COMPUTE VARIOUS CONFLUENCED STREAM VALUES<<<<<
============================================================================
  TOTAL NUMBER OF STREAMS =  2
  CONFLUENCE VALUES USED FOR INDEPENDENT STREAM  2 ARE:
  TIME OF CONCENTRATION(MIN.) =   14.56
  RAINFALL INTENSITY(INCH/HR) =   2.95
  TOTAL STREAM AREA(ACRES) =    15.10
  PEAK FLOW RATE(CFS) AT CONFLUENCE =     20.06

  ** CONFLUENCE DATA **
  STREAM     RUNOFF       Tc      INTENSITY      AREA
  NUMBER      (CFS)     (MIN.)   (INCH/HOUR)    (ACRE)
      1      310.63    22.59        2.345        270.00
      2       20.06    14.56        2.949         15.10

  RAINFALL INTENSITY AND TIME OF CONCENTRATION RATIO
  CONFLUENCE FORMULA USED FOR  2 STREAMS.

  ** PEAK FLOW RATE TABLE **
  STREAM     RUNOFF      Tc      INTENSITY
  NUMBER      (CFS)    (MIN.)   (INCH/HOUR)
      1      267.05    14.56       2.949
      2      326.58    22.59       2.345

  COMPUTED CONFLUENCE ESTIMATES ARE AS FOLLOWS:
  PEAK FLOW RATE(CFS) =     326.58   Tc(MIN.) =   22.59
  TOTAL AREA(ACRES) =      285.1
  LONGEST FLOWPATH FROM NODE   1400.00 TO NODE   1498.00 =    7355.00 FEET.

****************************************************************************
```

```
  FLOW PROCESS FROM NODE   1498.00 TO NODE   1499.00 IS CODE =  31
----------------------------------------------------------------------------
  >>>>>COMPUTE PIPE-FLOW TRAVEL TIME THRU SUBAREA<<<<<
  >>>>>USING COMPUTER-ESTIMATED PIPESIZE (NON-PRESSURE FLOW)<<<<<
============================================================================
  ELEVATION DATA: UPSTREAM(FEET) =   100.00  DOWNSTREAM(FEET) =    71.50
  FLOW LENGTH(FEET) =   570.00   MANNING'S N =  0.013
  DEPTH OF FLOW IN  51.0 INCH PIPE IS  38.2 INCHES
  PIPE-FLOW VELOCITY(FEET/SEC.) =  28.68
  ESTIMATED PIPE DIAMETER(INCH) =  51.00    NUMBER OF PIPES =   1
  PIPE-FLOW(CFS) =     326.58
  PIPE TRAVEL TIME(MIN.) =   0.33    Tc(MIN.) =   22.92
  LONGEST FLOWPATH FROM NODE   1400.00 TO NODE   1499.00 =    7925.00 FEET.

****************************************************************************
  FLOW PROCESS FROM NODE   1499.00 TO NODE   1499.00 IS CODE =  10
----------------------------------------------------------------------------
  >>>>>MAIN-STREAM MEMORY COPIED ONTO MEMORY BANK # 1 <<<<<
============================================================================

****************************************************************************
  FLOW PROCESS FROM NODE   1470.00 TO NODE   1471.00 IS CODE =  22
----------------------------------------------------------------------------
  >>>>>RATIONAL METHOD INITIAL SUBAREA ANALYSIS<<<<<
============================================================================
  *USER SPECIFIED(SUBAREA):
  RESIDENTIAL (1. DU/AC OR LESS) RUNOFF COEFFICIENT = .8800
  S.C.S. CURVE NUMBER (AMC II) =   0
  USER SPECIFIED Tc(MIN.) =    5.000
   100 YEAR RAINFALL INTENSITY(INCH/HOUR) =  4.400
  SUBAREA RUNOFF(CFS) =      0.39
  TOTAL AREA(ACRES) =      0.10   TOTAL RUNOFF(CFS) =      0.39

****************************************************************************
  FLOW PROCESS FROM NODE   1471.00 TO NODE   1472.00 IS CODE =  62
----------------------------------------------------------------------------
  >>>>>COMPUTE STREET FLOW TRAVEL TIME THRU SUBAREA<<<<<
  >>>>>(STREET TABLE SECTION #  2 USED)<<<<<
============================================================================
  UPSTREAM ELEVATION(FEET) =  100.00  DOWNSTREAM ELEVATION(FEET) =   84.50
  STREET LENGTH(FEET) =   775.00   CURB HEIGHT(INCHES) =  6.0
  STREET HALFWIDTH(FEET) = 20.00

  DISTANCE FROM CROWN TO CROSSFALL GRADEBREAK(FEET) =  15.00
  INSIDE STREET CROSSFALL(DECIMAL) =  0.020
  OUTSIDE STREET CROSSFALL(DECIMAL)  =  0.020

  SPECIFIED NUMBER OF HALFSTREETS CARRYING RUNOFF =  1
  STREET PARKWAY CROSSFALL(DECIMAL)  =  0.020
  Manning's FRICTION FACTOR for Streetflow Section(curb-to-curb) =   0.0180
  Manning's FRICTION FACTOR for Back-of-Walk Flow Section =   0.0200

    **TRAVEL TIME COMPUTED USING ESTIMATED FLOW(CFS) =       1.58
    STREETFLOW MODEL RESULTS USING ESTIMATED FLOW:
    STREET FLOW DEPTH(FEET) =  0.26
    HALFSTREET FLOOD WIDTH(FEET) =    7.78
    AVERAGE FLOW VELOCITY(FEET/SEC.) =    2.29
    PRODUCT OF DEPTH&VELOCITY(FT*FT/SEC.) =    0.60
```

```
  STREET FLOW TRAVEL TIME(MIN.) =   5.64   Tc(MIN.) =   10.64
   100 YEAR RAINFALL INTENSITY(INCH/HOUR) =  3.379
  *USER SPECIFIED(SUBAREA):
  RESIDENTIAL (1. DU/AC OR LESS) RUNOFF COEFFICIENT = .8800
  S.C.S. CURVE NUMBER (AMC II) =   0
  AREA-AVERAGE RUNOFF COEFFICIENT =  0.880
  SUBAREA AREA(ACRES) =    0.80      SUBAREA RUNOFF(CFS) =    2.38
  TOTAL AREA(ACRES) =        0.9        PEAK FLOW RATE(CFS) =       2.68

  END OF SUBAREA STREET FLOW HYDRAULICS:
  DEPTH(FEET) = 0.30   HALFSTREET FLOOD WIDTH(FEET) =   9.78
  FLOW VELOCITY(FEET/SEC.) =  2.57   DEPTH*VELOCITY(FT*FT/SEC.) =   0.77
  LONGEST FLOWPATH FROM NODE   1470.00 TO NODE   1472.00 =    1345.00 FEET.

****************************************************************************
  FLOW PROCESS FROM NODE   1472.00 TO NODE   1472.00 IS CODE =  81
----------------------------------------------------------------------------
  >>>>>ADDITION OF SUBAREA TO MAINLINE PEAK FLOW<<<<<
============================================================================
   100 YEAR RAINFALL INTENSITY(INCH/HOUR) =  3.379
  *USER SPECIFIED(SUBAREA):
  RESIDENTIAL (1. DU/AC OR LESS) RUNOFF COEFFICIENT = .8800
  S.C.S. CURVE NUMBER (AMC II) =   0
  AREA-AVERAGE RUNOFF COEFFICIENT = 0.8800
  SUBAREA AREA(ACRES) =    0.30   SUBAREA RUNOFF(CFS) =    0.89
  TOTAL AREA(ACRES) =        1.2   TOTAL RUNOFF(CFS) =       3.57
  TC(MIN.) =   10.64

****************************************************************************
  FLOW PROCESS FROM NODE   1472.00 TO NODE   1474.00 IS CODE =  31
----------------------------------------------------------------------------
  >>>>>COMPUTE PIPE-FLOW TRAVEL TIME THRU SUBAREA<<<<<
  >>>>>USING COMPUTER-ESTIMATED PIPESIZE (NON-PRESSURE FLOW)<<<<<
============================================================================
  ELEVATION DATA: UPSTREAM(FEET) =   100.00  DOWNSTREAM(FEET) =    98.50
  FLOW LENGTH(FEET) =    75.00   MANNING'S N =  0.013
  ESTIMATED PIPE DIAMETER(INCH) INCREASED TO 18.000
  DEPTH OF FLOW IN  18.0 INCH PIPE IS   6.2 INCHES
  PIPE-FLOW VELOCITY(FEET/SEC.) =   6.67
  ESTIMATED PIPE DIAMETER(INCH) =  18.00    NUMBER OF PIPES =   1
  PIPE-FLOW(CFS) =       3.57
  PIPE TRAVEL TIME(MIN.) =   0.19    Tc(MIN.) =   10.83
  LONGEST FLOWPATH FROM NODE   1470.00 TO NODE   1474.00 =    1420.00 FEET.

****************************************************************************
  FLOW PROCESS FROM NODE   1474.00 TO NODE   1474.00 IS CODE =  81
----------------------------------------------------------------------------
  >>>>>ADDITION OF SUBAREA TO MAINLINE PEAK FLOW<<<<<
============================================================================
   100 YEAR RAINFALL INTENSITY(INCH/HOUR) =  3.359
  *USER SPECIFIED(SUBAREA):
  RESIDENTIAL (1. DU/AC OR LESS) RUNOFF COEFFICIENT = .8800
  S.C.S. CURVE NUMBER (AMC II) =   0
  AREA-AVERAGE RUNOFF COEFFICIENT = 0.8800
  SUBAREA AREA(ACRES) =    1.40   SUBAREA RUNOFF(CFS) =    4.14
  TOTAL AREA(ACRES) =        2.6   TOTAL RUNOFF(CFS) =       7.68
  TC(MIN.) =   10.83
```

```
****************************************************************************
  FLOW PROCESS FROM NODE   1474.00 TO NODE   1475.00 IS CODE =  31
----------------------------------------------------------------------------
  >>>>>COMPUTE PIPE-FLOW TRAVEL TIME THRU SUBAREA<<<<<
  >>>>>USING COMPUTER-ESTIMATED PIPESIZE (NON-PRESSURE FLOW)<<<<<
============================================================================
  ELEVATION DATA: UPSTREAM(FEET) =   100.00  DOWNSTREAM(FEET) =    90.20
  FLOW LENGTH(FEET) =   490.00   MANNING'S N =  0.013
  ESTIMATED PIPE DIAMETER(INCH) INCREASED TO 18.000
  DEPTH OF FLOW IN  18.0 INCH PIPE IS   9.5 INCHES
  PIPE-FLOW VELOCITY(FEET/SEC.) =   8.17
  ESTIMATED PIPE DIAMETER(INCH) =  18.00    NUMBER OF PIPES =   1
  PIPE-FLOW(CFS) =       7.68
  PIPE TRAVEL TIME(MIN.) =   1.00    Tc(MIN.) =   11.83
  LONGEST FLOWPATH FROM NODE   1470.00 TO NODE   1475.00 =    1910.00 FEET.

****************************************************************************
  FLOW PROCESS FROM NODE   1475.00 TO NODE   1475.00 IS CODE =  81
----------------------------------------------------------------------------
  >>>>>ADDITION OF SUBAREA TO MAINLINE PEAK FLOW<<<<<
============================================================================
   100 YEAR RAINFALL INTENSITY(INCH/HOUR) =  3.249
  *USER SPECIFIED(SUBAREA):
  RESIDENTIAL (1. DU/AC OR LESS) RUNOFF COEFFICIENT = .8800
  S.C.S. CURVE NUMBER (AMC II) =   0
  AREA-AVERAGE RUNOFF COEFFICIENT = 0.8800
  SUBAREA AREA(ACRES) =    1.00   SUBAREA RUNOFF(CFS) =    2.86
  TOTAL AREA(ACRES) =        3.6   TOTAL RUNOFF(CFS) =      10.29
  TC(MIN.) =   11.83

****************************************************************************
  FLOW PROCESS FROM NODE   1475.00 TO NODE   1475.50 IS CODE =  31
----------------------------------------------------------------------------
  >>>>>COMPUTE PIPE-FLOW TRAVEL TIME THRU SUBAREA<<<<<
  >>>>>USING COMPUTER-ESTIMATED PIPESIZE (NON-PRESSURE FLOW)<<<<<
============================================================================
  ELEVATION DATA: UPSTREAM(FEET) =   100.00  DOWNSTREAM(FEET) =    80.75
  FLOW LENGTH(FEET) =   385.00   MANNING'S N =  0.013
  ESTIMATED PIPE DIAMETER(INCH) INCREASED TO 18.000
  DEPTH OF FLOW IN  18.0 INCH PIPE IS   8.6 INCHES
  PIPE-FLOW VELOCITY(FEET/SEC.) =  12.38
  ESTIMATED PIPE DIAMETER(INCH) =  18.00    NUMBER OF PIPES =   1
  PIPE-FLOW(CFS) =      10.29
  PIPE TRAVEL TIME(MIN.) =   0.52    Tc(MIN.) =   12.35
  LONGEST FLOWPATH FROM NODE   1470.00 TO NODE   1475.50 =    2295.00 FEET.

****************************************************************************
  FLOW PROCESS FROM NODE   1475.50 TO NODE   1475.50 IS CODE =   1
----------------------------------------------------------------------------
  >>>>>DESIGNATE INDEPENDENT STREAM FOR CONFLUENCE<<<<<
============================================================================
  TOTAL NUMBER OF STREAMS =  2
  CONFLUENCE VALUES USED FOR INDEPENDENT STREAM  1 ARE:
  TIME OF CONCENTRATION(MIN.) =   12.35
  RAINFALL INTENSITY(INCH/HR) =   3.19
  TOTAL STREAM AREA(ACRES) =     3.60
  PEAK FLOW RATE(CFS) AT CONFLUENCE =     10.29
```

```
****************************************************************************
  FLOW PROCESS FROM NODE    398.00 TO NODE   1475.50 IS CODE =   7
----------------------------------------------------------------------------
  >>>>>USER SPECIFIED HYDROLOGY INFORMATION AT NODE<<<<<
============================================================================
  USER-SPECIFIED VALUES ARE AS FOLLOWS:
  TC(MIN) =  11.85   RAIN INTENSITY(INCH/HOUR) =  3.25
  TOTAL AREA(ACRES) =    29.70   TOTAL RUNOFF(CFS) =     79.44

****************************************************************************
  FLOW PROCESS FROM NODE   1475.50 TO NODE   1475.50 IS CODE =   1
----------------------------------------------------------------------------
  >>>>>DESIGNATE INDEPENDENT STREAM FOR CONFLUENCE<<<<<
  >>>>>AND COMPUTE VARIOUS CONFLUENCED STREAM VALUES<<<<<
============================================================================
  TOTAL NUMBER OF STREAMS =  2
  CONFLUENCE VALUES USED FOR INDEPENDENT STREAM  2 ARE:
  TIME OF CONCENTRATION(MIN.) =   11.85
  RAINFALL INTENSITY(INCH/HR) =   3.25
  TOTAL STREAM AREA(ACRES) =    29.70
  PEAK FLOW RATE(CFS) AT CONFLUENCE =     79.44

  ** CONFLUENCE DATA **
  STREAM     RUNOFF       Tc      INTENSITY      AREA
  NUMBER      (CFS)     (MIN.)   (INCH/HOUR)    (ACRE)
      1       10.29    12.35        3.192          3.60
      2       79.44    11.85        3.247         29.70

  RAINFALL INTENSITY AND TIME OF CONCENTRATION RATIO
  CONFLUENCE FORMULA USED FOR  2 STREAMS.

  ** PEAK FLOW RATE TABLE **
  STREAM     RUNOFF      Tc      INTENSITY
  NUMBER      (CFS)    (MIN.)   (INCH/HOUR)
      1       89.32    11.85       3.247
      2       88.39    12.35       3.192

  COMPUTED CONFLUENCE ESTIMATES ARE AS FOLLOWS:
  PEAK FLOW RATE(CFS) =      89.32   Tc(MIN.) =   11.85
  TOTAL AREA(ACRES) =       33.3
  LONGEST FLOWPATH FROM NODE   1450.00 TO NODE   1475.50 =    3410.00 FEET.

****************************************************************************
  FLOW PROCESS FROM NODE   1475.50 TO NODE   1476.00 IS CODE =  31
----------------------------------------------------------------------------
  >>>>>COMPUTE PIPE-FLOW TRAVEL TIME THRU SUBAREA<<<<<
  >>>>>USING COMPUTER-ESTIMATED PIPESIZE (NON-PRESSURE FLOW)<<<<<
============================================================================
  ELEVATION DATA: UPSTREAM(FEET) =   100.00  DOWNSTREAM(FEET) =    92.50
  FLOW LENGTH(FEET) =   150.00   MANNING'S N =  0.013
  DEPTH OF FLOW IN  33.0 INCH PIPE IS  22.2 INCHES
  PIPE-FLOW VELOCITY(FEET/SEC.) =  21.01
  ESTIMATED PIPE DIAMETER(INCH) =  33.00    NUMBER OF PIPES =   1
  PIPE-FLOW(CFS) =      89.32
  PIPE TRAVEL TIME(MIN.) =   0.12    Tc(MIN.) =   11.97
  LONGEST FLOWPATH FROM NODE   1450.00 TO NODE   1476.00 =    3560.00 FEET.

****************************************************************************
```

```
  FLOW PROCESS FROM NODE   1476.00 TO NODE   1476.00 IS CODE =  81
----------------------------------------------------------------------------
  >>>>>ADDITION OF SUBAREA TO MAINLINE PEAK FLOW<<<<<
============================================================================
   100 YEAR RAINFALL INTENSITY(INCH/HOUR) =  3.233
  *USER SPECIFIED(SUBAREA):
  RESIDENTIAL (1. DU/AC OR LESS) RUNOFF COEFFICIENT = .8800
  S.C.S. CURVE NUMBER (AMC II) =   0
  AREA-AVERAGE RUNOFF COEFFICIENT = 0.8310
  SUBAREA AREA(ACRES) =    0.70   SUBAREA RUNOFF(CFS) =    1.99
  TOTAL AREA(ACRES) =       34.0   TOTAL RUNOFF(CFS) =      91.35
  TC(MIN.) =   11.97

****************************************************************************
  FLOW PROCESS FROM NODE   1476.00 TO NODE   1476.00 IS CODE =   1
----------------------------------------------------------------------------
  >>>>>DESIGNATE INDEPENDENT STREAM FOR CONFLUENCE<<<<<
============================================================================
  TOTAL NUMBER OF STREAMS =  2
  CONFLUENCE VALUES USED FOR INDEPENDENT STREAM  1 ARE:
  TIME OF CONCENTRATION(MIN.) =   11.97
  RAINFALL INTENSITY(INCH/HR) =   3.23
  TOTAL STREAM AREA(ACRES) =    34.00
  PEAK FLOW RATE(CFS) AT CONFLUENCE =     91.35

****************************************************************************
  FLOW PROCESS FROM NODE    399.00 TO NODE   1476.10 IS CODE =   7
----------------------------------------------------------------------------
  >>>>>USER SPECIFIED HYDROLOGY INFORMATION AT NODE<<<<<
============================================================================
  USER-SPECIFIED VALUES ARE AS FOLLOWS:
  TC(MIN) =  10.31   RAIN INTENSITY(INCH/HOUR) =  3.42
  TOTAL AREA(ACRES) =     7.20   TOTAL RUNOFF(CFS) =     19.81

****************************************************************************
  FLOW PROCESS FROM NODE   1476.10 TO NODE   1476.10 IS CODE =  81
----------------------------------------------------------------------------
  >>>>>ADDITION OF SUBAREA TO MAINLINE PEAK FLOW<<<<<
============================================================================
   100 YEAR RAINFALL INTENSITY(INCH/HOUR) =  3.416
  *USER SPECIFIED(SUBAREA):
  RESIDENTIAL (1. DU/AC OR LESS) RUNOFF COEFFICIENT = .8800
  S.C.S. CURVE NUMBER (AMC II) =   0
  AREA-AVERAGE RUNOFF COEFFICIENT = 0.8146
  SUBAREA AREA(ACRES) =    1.00   SUBAREA RUNOFF(CFS) =    3.01
  TOTAL AREA(ACRES) =        8.2   TOTAL RUNOFF(CFS) =      22.82
  TC(MIN.) =   10.31

****************************************************************************
  FLOW PROCESS FROM NODE   1476.10 TO NODE   1476.00 IS CODE =  31
----------------------------------------------------------------------------
  >>>>>COMPUTE PIPE-FLOW TRAVEL TIME THRU SUBAREA<<<<<
  >>>>>USING COMPUTER-ESTIMATED PIPESIZE (NON-PRESSURE FLOW)<<<<<
============================================================================
  ELEVATION DATA: UPSTREAM(FEET) =   100.00  DOWNSTREAM(FEET) =    99.50
  FLOW LENGTH(FEET) =    25.00   MANNING'S N =  0.013
  DEPTH OF FLOW IN  24.0 INCH PIPE IS  15.5 INCHES
  PIPE-FLOW VELOCITY(FEET/SEC.) =  10.63
```

```
  ESTIMATED PIPE DIAMETER(INCH) =  24.00    NUMBER OF PIPES =   1
  PIPE-FLOW(CFS) =      22.82
  PIPE TRAVEL TIME(MIN.) =   0.04    Tc(MIN.) =   10.35
  LONGEST FLOWPATH FROM NODE   1450.00 TO NODE   1476.00 =    3435.00 FEET.

****************************************************************************
  FLOW PROCESS FROM NODE   1476.00 TO NODE   1476.00 IS CODE =   1
----------------------------------------------------------------------------
  >>>>>DESIGNATE INDEPENDENT STREAM FOR CONFLUENCE<<<<<
  >>>>>AND COMPUTE VARIOUS CONFLUENCED STREAM VALUES<<<<<
============================================================================
  TOTAL NUMBER OF STREAMS =  2
  CONFLUENCE VALUES USED FOR INDEPENDENT STREAM  2 ARE:
  TIME OF CONCENTRATION(MIN.) =   10.35
  RAINFALL INTENSITY(INCH/HR) =   3.41
  TOTAL STREAM AREA(ACRES) =     8.20
  PEAK FLOW RATE(CFS) AT CONFLUENCE =     22.82

  ** CONFLUENCE DATA **
  STREAM     RUNOFF       Tc      INTENSITY      AREA
  NUMBER      (CFS)     (MIN.)   (INCH/HOUR)    (ACRE)
      1       91.35    11.97        3.233         34.00
      2       22.82    10.35        3.412          8.20

  RAINFALL INTENSITY AND TIME OF CONCENTRATION RATIO
  CONFLUENCE FORMULA USED FOR  2 STREAMS.

  ** PEAK FLOW RATE TABLE **
  STREAM     RUNOFF      Tc      INTENSITY
  NUMBER      (CFS)    (MIN.)   (INCH/HOUR)
      1      109.40    10.35       3.412
      2      112.98    11.97       3.233

  COMPUTED CONFLUENCE ESTIMATES ARE AS FOLLOWS:
  PEAK FLOW RATE(CFS) =     112.98   Tc(MIN.) =   11.97
  TOTAL AREA(ACRES) =       42.2
  LONGEST FLOWPATH FROM NODE   1450.00 TO NODE   1476.00 =    3560.00 FEET.

****************************************************************************
  FLOW PROCESS FROM NODE   1476.00 TO NODE   1477.00 IS CODE =  31
----------------------------------------------------------------------------
  >>>>>COMPUTE PIPE-FLOW TRAVEL TIME THRU SUBAREA<<<<<
  >>>>>USING COMPUTER-ESTIMATED PIPESIZE (NON-PRESSURE FLOW)<<<<<
============================================================================
  ELEVATION DATA: UPSTREAM(FEET) =   100.00  DOWNSTREAM(FEET) =    80.00
  FLOW LENGTH(FEET) =   400.00   MANNING'S N =  0.013
  DEPTH OF FLOW IN  36.0 INCH PIPE IS  24.3 INCHES
  PIPE-FLOW VELOCITY(FEET/SEC.) =  22.27
  ESTIMATED PIPE DIAMETER(INCH) =  36.00    NUMBER OF PIPES =   1
  PIPE-FLOW(CFS) =     112.98
  PIPE TRAVEL TIME(MIN.) =   0.30    Tc(MIN.) =   12.27
  LONGEST FLOWPATH FROM NODE   1450.00 TO NODE   1477.00 =    3960.00 FEET.

****************************************************************************
  FLOW PROCESS FROM NODE   1477.00 TO NODE   1477.00 IS CODE =  81
----------------------------------------------------------------------------
  >>>>>ADDITION OF SUBAREA TO MAINLINE PEAK FLOW<<<<<
============================================================================
```

```
   100 YEAR RAINFALL INTENSITY(INCH/HOUR) =  3.200
  *USER SPECIFIED(SUBAREA):
  RESIDENTIAL (1. DU/AC OR LESS) RUNOFF COEFFICIENT = .8800
  S.C.S. CURVE NUMBER (AMC II) =   0
  AREA-AVERAGE RUNOFF COEFFICIENT = 0.8289
  SUBAREA AREA(ACRES) =    0.90   SUBAREA RUNOFF(CFS) =    2.53
  TOTAL AREA(ACRES) =       43.1   TOTAL RUNOFF(CFS) =     114.34
  TC(MIN.) =   12.27

****************************************************************************
  FLOW PROCESS FROM NODE   1477.00 TO NODE   1478.00 IS CODE =  31
----------------------------------------------------------------------------
  >>>>>COMPUTE PIPE-FLOW TRAVEL TIME THRU SUBAREA<<<<<
  >>>>>USING COMPUTER-ESTIMATED PIPESIZE (NON-PRESSURE FLOW)<<<<<
============================================================================
  ELEVATION DATA: UPSTREAM(FEET) =   100.00  DOWNSTREAM(FEET) =    77.50
  FLOW LENGTH(FEET) =   450.00   MANNING'S N =  0.013
  DEPTH OF FLOW IN  36.0 INCH PIPE IS  24.5 INCHES
  PIPE-FLOW VELOCITY(FEET/SEC.) =  22.32
  ESTIMATED PIPE DIAMETER(INCH) =  36.00    NUMBER OF PIPES =   1
  PIPE-FLOW(CFS) =     114.34
  PIPE TRAVEL TIME(MIN.) =   0.34    Tc(MIN.) =   12.60
  LONGEST FLOWPATH FROM NODE   1450.00 TO NODE   1478.00 =    4410.00 FEET.

****************************************************************************
  FLOW PROCESS FROM NODE   1478.00 TO NODE   1478.00 IS CODE =  81
----------------------------------------------------------------------------
  >>>>>ADDITION OF SUBAREA TO MAINLINE PEAK FLOW<<<<<
============================================================================
   100 YEAR RAINFALL INTENSITY(INCH/HOUR) =  3.164
  *USER SPECIFIED(SUBAREA):
  RESIDENTIAL (1. DU/AC OR LESS) RUNOFF COEFFICIENT = .8800
  S.C.S. CURVE NUMBER (AMC II) =   0
  AREA-AVERAGE RUNOFF COEFFICIENT = 0.8296
  SUBAREA AREA(ACRES) =    0.60   SUBAREA RUNOFF(CFS) =    1.67
  TOTAL AREA(ACRES) =       43.7   TOTAL RUNOFF(CFS) =     114.69
  TC(MIN.) =   12.60

****************************************************************************
  FLOW PROCESS FROM NODE   1478.00 TO NODE   1479.00 IS CODE =  31
----------------------------------------------------------------------------
  >>>>>COMPUTE PIPE-FLOW TRAVEL TIME THRU SUBAREA<<<<<
  >>>>>USING COMPUTER-ESTIMATED PIPESIZE (NON-PRESSURE FLOW)<<<<<
============================================================================
  ELEVATION DATA: UPSTREAM(FEET) =   100.00  DOWNSTREAM(FEET) =    76.25
  FLOW LENGTH(FEET) =   475.00   MANNING'S N =  0.013
  DEPTH OF FLOW IN  36.0 INCH PIPE IS  24.6 INCHES
  PIPE-FLOW VELOCITY(FEET/SEC.) =  22.33
  ESTIMATED PIPE DIAMETER(INCH) =  36.00    NUMBER OF PIPES =   1
  PIPE-FLOW(CFS) =     114.69
  PIPE TRAVEL TIME(MIN.) =   0.35    Tc(MIN.) =   12.96
  LONGEST FLOWPATH FROM NODE   1450.00 TO NODE   1479.00 =    4885.00 FEET.

****************************************************************************
  FLOW PROCESS FROM NODE   1479.00 TO NODE   1479.00 IS CODE =  81
----------------------------------------------------------------------------
  >>>>>ADDITION OF SUBAREA TO MAINLINE PEAK FLOW<<<<<
============================================================================
```

```
   100 YEAR RAINFALL INTENSITY(INCH/HOUR) =  3.125
  *USER SPECIFIED(SUBAREA):
  RESIDENTIAL (1. DU/AC OR LESS) RUNOFF COEFFICIENT = .8800
  S.C.S. CURVE NUMBER (AMC II) =   0
  AREA-AVERAGE RUNOFF COEFFICIENT = 0.8302
  SUBAREA AREA(ACRES) =    0.50   SUBAREA RUNOFF(CFS) =    1.37
  TOTAL AREA(ACRES) =       44.2   TOTAL RUNOFF(CFS) =     114.69
  TC(MIN.) =   12.96
  NOTE: PEAK FLOW RATE DEFAULTED TO UPSTREAM VALUE

****************************************************************************
  FLOW PROCESS FROM NODE   1479.00 TO NODE   1480.00 IS CODE =  31
----------------------------------------------------------------------------
  >>>>>COMPUTE PIPE-FLOW TRAVEL TIME THRU SUBAREA<<<<<
  >>>>>USING COMPUTER-ESTIMATED PIPESIZE (NON-PRESSURE FLOW)<<<<<
============================================================================
  ELEVATION DATA: UPSTREAM(FEET) =   100.00  DOWNSTREAM(FEET) =    76.25
  FLOW LENGTH(FEET) =   475.00   MANNING'S N =  0.013
  DEPTH OF FLOW IN  36.0 INCH PIPE IS  24.6 INCHES
  PIPE-FLOW VELOCITY(FEET/SEC.) =  22.33
  ESTIMATED PIPE DIAMETER(INCH) =  36.00    NUMBER OF PIPES =   1
  PIPE-FLOW(CFS) =     114.69
  PIPE TRAVEL TIME(MIN.) =   0.35    Tc(MIN.) =   13.31
  LONGEST FLOWPATH FROM NODE   1450.00 TO NODE   1480.00 =    5360.00 FEET.

****************************************************************************
  FLOW PROCESS FROM NODE   1480.00 TO NODE   1480.00 IS CODE =  81
----------------------------------------------------------------------------
  >>>>>ADDITION OF SUBAREA TO MAINLINE PEAK FLOW<<<<<
============================================================================
   100 YEAR RAINFALL INTENSITY(INCH/HOUR) =  3.086
  *USER SPECIFIED(SUBAREA):
  RESIDENTIAL (1. DU/AC OR LESS) RUNOFF COEFFICIENT = .8800
  S.C.S. CURVE NUMBER (AMC II) =   0
  AREA-AVERAGE RUNOFF COEFFICIENT = 0.8307
  SUBAREA AREA(ACRES) =    0.50   SUBAREA RUNOFF(CFS) =    1.36
  TOTAL AREA(ACRES) =       44.7   TOTAL RUNOFF(CFS) =     114.69
  TC(MIN.) =   13.31
  NOTE: PEAK FLOW RATE DEFAULTED TO UPSTREAM VALUE

****************************************************************************
  FLOW PROCESS FROM NODE   1480.00 TO NODE   1481.00 IS CODE =  31
----------------------------------------------------------------------------
  >>>>>COMPUTE PIPE-FLOW TRAVEL TIME THRU SUBAREA<<<<<
  >>>>>USING COMPUTER-ESTIMATED PIPESIZE (NON-PRESSURE FLOW)<<<<<
============================================================================
  ELEVATION DATA: UPSTREAM(FEET) =   100.00  DOWNSTREAM(FEET) =    76.25
  FLOW LENGTH(FEET) =   475.00   MANNING'S N =  0.013
  DEPTH OF FLOW IN  36.0 INCH PIPE IS  24.6 INCHES
  PIPE-FLOW VELOCITY(FEET/SEC.) =  22.33
  ESTIMATED PIPE DIAMETER(INCH) =  36.00    NUMBER OF PIPES =   1
  PIPE-FLOW(CFS) =     114.69
  PIPE TRAVEL TIME(MIN.) =   0.35    Tc(MIN.) =   13.67
  LONGEST FLOWPATH FROM NODE   1450.00 TO NODE   1481.00 =    5835.00 FEET.

****************************************************************************
  FLOW PROCESS FROM NODE   1481.00 TO NODE   1481.00 IS CODE =  81
----------------------------------------------------------------------------
```

```
  >>>>>ADDITION OF SUBAREA TO MAINLINE PEAK FLOW<<<<<
============================================================================
   100 YEAR RAINFALL INTENSITY(INCH/HOUR) =  3.047
  *USER SPECIFIED(SUBAREA):
  RESIDENTIAL (1. DU/AC OR LESS) RUNOFF COEFFICIENT = .8800
  S.C.S. CURVE NUMBER (AMC II) =   0
  AREA-AVERAGE RUNOFF COEFFICIENT = 0.8313
  SUBAREA AREA(ACRES) =    0.50   SUBAREA RUNOFF(CFS) =    1.34
  TOTAL AREA(ACRES) =       45.2   TOTAL RUNOFF(CFS) =     114.69
  TC(MIN.) =   13.67
  NOTE: PEAK FLOW RATE DEFAULTED TO UPSTREAM VALUE

****************************************************************************
  FLOW PROCESS FROM NODE   1481.00 TO NODE   1482.00 IS CODE =  31
----------------------------------------------------------------------------
  >>>>>COMPUTE PIPE-FLOW TRAVEL TIME THRU SUBAREA<<<<<
  >>>>>USING COMPUTER-ESTIMATED PIPESIZE (NON-PRESSURE FLOW)<<<<<
============================================================================
  ELEVATION DATA: UPSTREAM(FEET) =   100.00  DOWNSTREAM(FEET) =    76.25
  FLOW LENGTH(FEET) =   475.00   MANNING'S N =  0.013
  DEPTH OF FLOW IN  36.0 INCH PIPE IS  24.6 INCHES
  PIPE-FLOW VELOCITY(FEET/SEC.) =  22.33
  ESTIMATED PIPE DIAMETER(INCH) =  36.00    NUMBER OF PIPES =   1
  PIPE-FLOW(CFS) =     114.69
  PIPE TRAVEL TIME(MIN.) =   0.35    Tc(MIN.) =   14.02
  LONGEST FLOWPATH FROM NODE   1450.00 TO NODE   1482.00 =    6310.00 FEET.

****************************************************************************
  FLOW PROCESS FROM NODE   1482.00 TO NODE   1482.00 IS CODE =  81
----------------------------------------------------------------------------
  >>>>>ADDITION OF SUBAREA TO MAINLINE PEAK FLOW<<<<<
============================================================================
   100 YEAR RAINFALL INTENSITY(INCH/HOUR) =  3.008
  *USER SPECIFIED(SUBAREA):
  RESIDENTIAL (1. DU/AC OR LESS) RUNOFF COEFFICIENT = .8800
  S.C.S. CURVE NUMBER (AMC II) =   0
  AREA-AVERAGE RUNOFF COEFFICIENT = 0.8318
  SUBAREA AREA(ACRES) =    0.50   SUBAREA RUNOFF(CFS) =    1.32
  TOTAL AREA(ACRES) =       45.7   TOTAL RUNOFF(CFS) =     114.69
  TC(MIN.) =   14.02
  NOTE: PEAK FLOW RATE DEFAULTED TO UPSTREAM VALUE

****************************************************************************
  FLOW PROCESS FROM NODE   1482.00 TO NODE   1483.00 IS CODE =  31
----------------------------------------------------------------------------
  >>>>>COMPUTE PIPE-FLOW TRAVEL TIME THRU SUBAREA<<<<<
  >>>>>USING COMPUTER-ESTIMATED PIPESIZE (NON-PRESSURE FLOW)<<<<<
============================================================================
  ELEVATION DATA: UPSTREAM(FEET) =   100.00  DOWNSTREAM(FEET) =    76.00
  FLOW LENGTH(FEET) =   480.00   MANNING'S N =  0.013
  DEPTH OF FLOW IN  36.0 INCH PIPE IS  24.6 INCHES
  PIPE-FLOW VELOCITY(FEET/SEC.) =  22.33
  ESTIMATED PIPE DIAMETER(INCH) =  36.00    NUMBER OF PIPES =   1
  PIPE-FLOW(CFS) =     114.69
  PIPE TRAVEL TIME(MIN.) =   0.36    Tc(MIN.) =   14.38
  LONGEST FLOWPATH FROM NODE   1450.00 TO NODE   1483.00 =    6790.00 FEET.

****************************************************************************
```

```
  FLOW PROCESS FROM NODE   1483.00 TO NODE   1483.00 IS CODE =  81
----------------------------------------------------------------------------
  >>>>>ADDITION OF SUBAREA TO MAINLINE PEAK FLOW<<<<<
============================================================================
   100 YEAR RAINFALL INTENSITY(INCH/HOUR) =  2.968
  *USER SPECIFIED(SUBAREA):
  RESIDENTIAL (1. DU/AC OR LESS) RUNOFF COEFFICIENT = .8800
  S.C.S. CURVE NUMBER (AMC II) =   0
  AREA-AVERAGE RUNOFF COEFFICIENT = 0.8323
  SUBAREA AREA(ACRES) =    0.50   SUBAREA RUNOFF(CFS) =    1.31
  TOTAL AREA(ACRES) =       46.2   TOTAL RUNOFF(CFS) =     114.69
  TC(MIN.) =   14.38
  NOTE: PEAK FLOW RATE DEFAULTED TO UPSTREAM VALUE

****************************************************************************
  FLOW PROCESS FROM NODE   1483.00 TO NODE   1484.00 IS CODE =  31
----------------------------------------------------------------------------
  >>>>>COMPUTE PIPE-FLOW TRAVEL TIME THRU SUBAREA<<<<<
  >>>>>USING COMPUTER-ESTIMATED PIPESIZE (NON-PRESSURE FLOW)<<<<<
============================================================================
  ELEVATION DATA: UPSTREAM(FEET) =   100.00  DOWNSTREAM(FEET) =    82.50
  FLOW LENGTH(FEET) =   350.00   MANNING'S N =  0.013
  DEPTH OF FLOW IN  36.0 INCH PIPE IS  24.6 INCHES
  PIPE-FLOW VELOCITY(FEET/SEC.) =  22.33
  ESTIMATED PIPE DIAMETER(INCH) =  36.00    NUMBER OF PIPES =   1
  PIPE-FLOW(CFS) =     114.69
  PIPE TRAVEL TIME(MIN.) =   0.26    Tc(MIN.) =   14.64
  LONGEST FLOWPATH FROM NODE   1450.00 TO NODE   1484.00 =    7140.00 FEET.

****************************************************************************
  FLOW PROCESS FROM NODE   1484.00 TO NODE   1484.00 IS CODE =  81
----------------------------------------------------------------------------
  >>>>>ADDITION OF SUBAREA TO MAINLINE PEAK FLOW<<<<<
============================================================================
   100 YEAR RAINFALL INTENSITY(INCH/HOUR) =  2.939
  *USER SPECIFIED(SUBAREA):
  RESIDENTIAL (1. DU/AC OR LESS) RUNOFF COEFFICIENT = .8800
  S.C.S. CURVE NUMBER (AMC II) =   0
  AREA-AVERAGE RUNOFF COEFFICIENT = 0.8325
  SUBAREA AREA(ACRES) =    0.20   SUBAREA RUNOFF(CFS) =    0.52
  TOTAL AREA(ACRES) =       46.4   TOTAL RUNOFF(CFS) =     114.69
  TC(MIN.) =   14.64
  NOTE: PEAK FLOW RATE DEFAULTED TO UPSTREAM VALUE

****************************************************************************
  FLOW PROCESS FROM NODE   1484.00 TO NODE   1485.00 IS CODE =  31
----------------------------------------------------------------------------
  >>>>>COMPUTE PIPE-FLOW TRAVEL TIME THRU SUBAREA<<<<<
  >>>>>USING COMPUTER-ESTIMATED PIPESIZE (NON-PRESSURE FLOW)<<<<<
============================================================================
  ELEVATION DATA: UPSTREAM(FEET) =   100.00  DOWNSTREAM(FEET) =    87.50
  FLOW LENGTH(FEET) =   250.00   MANNING'S N =  0.013
  DEPTH OF FLOW IN  36.0 INCH PIPE IS  24.6 INCHES
  PIPE-FLOW VELOCITY(FEET/SEC.) =  22.33
  ESTIMATED PIPE DIAMETER(INCH) =  36.00    NUMBER OF PIPES =   1
  PIPE-FLOW(CFS) =     114.69
  PIPE TRAVEL TIME(MIN.) =   0.19    Tc(MIN.) =   14.83
  LONGEST FLOWPATH FROM NODE   1450.00 TO NODE   1485.00 =    7390.00 FEET.
```

```
****************************************************************************
  FLOW PROCESS FROM NODE   1485.00 TO NODE   1485.00 IS CODE =  81
----------------------------------------------------------------------------
  >>>>>ADDITION OF SUBAREA TO MAINLINE PEAK FLOW<<<<<
============================================================================
   100 YEAR RAINFALL INTENSITY(INCH/HOUR) =  2.919
  *USER SPECIFIED(SUBAREA):
  RESIDENTIAL (1. DU/AC OR LESS) RUNOFF COEFFICIENT = .8800
  S.C.S. CURVE NUMBER (AMC II) =   0
  AREA-AVERAGE RUNOFF COEFFICIENT = 0.8329
  SUBAREA AREA(ACRES) =    0.40   SUBAREA RUNOFF(CFS) =    1.03
  TOTAL AREA(ACRES) =       46.8   TOTAL RUNOFF(CFS) =     114.69
  TC(MIN.) =   14.83
  NOTE: PEAK FLOW RATE DEFAULTED TO UPSTREAM VALUE

****************************************************************************
  FLOW PROCESS FROM NODE   1485.00 TO NODE   1495.00 IS CODE =  51
----------------------------------------------------------------------------
  >>>>>COMPUTE TRAPEZOIDAL CHANNEL FLOW<<<<<
  >>>>>TRAVELTIME THRU SUBAREA (EXISTING ELEMENT)<<<<<
============================================================================
  ELEVATION DATA: UPSTREAM(FEET) =    100.00  DOWNSTREAM(FEET) =     95.00
  CHANNEL LENGTH THRU SUBAREA(FEET) =   300.00   CHANNEL SLOPE =  0.0167
  CHANNEL BASE(FEET) =   10.00   "Z" FACTOR =   4.000
  MANNING'S FACTOR = 0.035   MAXIMUM DEPTH(FEET) =  10.00
   100 YEAR RAINFALL INTENSITY(INCH/HOUR) =  2.840
  *USER SPECIFIED(SUBAREA):
  RESIDENTIAL (1. DU/AC OR LESS) RUNOFF COEFFICIENT = .4500
  S.C.S. CURVE NUMBER (AMC II) =   0
  TRAVEL TIME COMPUTED USING ESTIMATED FLOW(CFS) =     115.84
  TRAVEL TIME THRU SUBAREA BASED ON VELOCITY(FEET/SEC.) =   5.46
  AVERAGE FLOW DEPTH(FEET) =   1.37   TRAVEL TIME(MIN.) =   0.92
  Tc(MIN.) =   15.74
  SUBAREA AREA(ACRES) =     1.80       SUBAREA RUNOFF(CFS) =    2.30
  AREA-AVERAGE RUNOFF COEFFICIENT =  0.819
  TOTAL AREA(ACRES) =       48.6         PEAK FLOW RATE(CFS) =     114.69

  END OF SUBAREA CHANNEL FLOW HYDRAULICS:
  DEPTH(FEET) =  1.36   FLOW VELOCITY(FEET/SEC.) =   5.45
  LONGEST FLOWPATH FROM NODE   1450.00 TO NODE   1495.00 =    7690.00 FEET.

****************************************************************************
  FLOW PROCESS FROM NODE   1495.00 TO NODE   1495.00 IS CODE =   1
----------------------------------------------------------------------------
  >>>>>DESIGNATE INDEPENDENT STREAM FOR CONFLUENCE<<<<<
============================================================================
  TOTAL NUMBER OF STREAMS =  2
  CONFLUENCE VALUES USED FOR INDEPENDENT STREAM  1 ARE:
  TIME OF CONCENTRATION(MIN.) =   15.74
  RAINFALL INTENSITY(INCH/HR) =   2.84
  TOTAL STREAM AREA(ACRES) =    48.60
  PEAK FLOW RATE(CFS) AT CONFLUENCE =    114.69

****************************************************************************
  FLOW PROCESS FROM NODE   1490.00 TO NODE   1490.00 IS CODE =  22
----------------------------------------------------------------------------
  >>>>>RATIONAL METHOD INITIAL SUBAREA ANALYSIS<<<<<
```

```
============================================================================
  *USER SPECIFIED(SUBAREA):
  RESIDENTIAL (1. DU/AC OR LESS) RUNOFF COEFFICIENT = .8800
  S.C.S. CURVE NUMBER (AMC II) =   0
  USER SPECIFIED Tc(MIN.) =    5.000
   100 YEAR RAINFALL INTENSITY(INCH/HOUR) =  4.400
  SUBAREA RUNOFF(CFS) =      1.55
  TOTAL AREA(ACRES) =      0.40   TOTAL RUNOFF(CFS) =      1.55

****************************************************************************
  FLOW PROCESS FROM NODE   1490.00 TO NODE   1491.00 IS CODE =  31
----------------------------------------------------------------------------
  >>>>>COMPUTE PIPE-FLOW TRAVEL TIME THRU SUBAREA<<<<<
  >>>>>USING COMPUTER-ESTIMATED PIPESIZE (NON-PRESSURE FLOW)<<<<<
============================================================================
  ELEVATION DATA: UPSTREAM(FEET) =   100.00  DOWNSTREAM(FEET) =    97.50
  FLOW LENGTH(FEET) =    50.00   MANNING'S N =  0.013
  ESTIMATED PIPE DIAMETER(INCH) INCREASED TO 18.000
  DEPTH OF FLOW IN  18.0 INCH PIPE IS   3.2 INCHES
  PIPE-FLOW VELOCITY(FEET/SEC.) =   7.27
  ESTIMATED PIPE DIAMETER(INCH) =  18.00    NUMBER OF PIPES =   1
  PIPE-FLOW(CFS) =       1.55
  PIPE TRAVEL TIME(MIN.) =   0.11    Tc(MIN.) =    5.11
  LONGEST FLOWPATH FROM NODE   1490.00 TO NODE   1491.00 =     350.00 FEET.

****************************************************************************
  FLOW PROCESS FROM NODE   1491.00 TO NODE   1491.00 IS CODE =  81
----------------------------------------------------------------------------
  >>>>>ADDITION OF SUBAREA TO MAINLINE PEAK FLOW<<<<<
============================================================================
   100 YEAR RAINFALL INTENSITY(INCH/HOUR) =  4.378
  *USER SPECIFIED(SUBAREA):
  RESIDENTIAL (1. DU/AC OR LESS) RUNOFF COEFFICIENT = .8800
  S.C.S. CURVE NUMBER (AMC II) =   0
  AREA-AVERAGE RUNOFF COEFFICIENT = 0.8800
  SUBAREA AREA(ACRES) =    0.20   SUBAREA RUNOFF(CFS) =    0.77
  TOTAL AREA(ACRES) =        0.6   TOTAL RUNOFF(CFS) =       2.31
  TC(MIN.) =    5.11

****************************************************************************
  FLOW PROCESS FROM NODE   1491.00 TO NODE   1495.00 IS CODE =  31
----------------------------------------------------------------------------
  >>>>>COMPUTE PIPE-FLOW TRAVEL TIME THRU SUBAREA<<<<<
  >>>>>USING COMPUTER-ESTIMATED PIPESIZE (NON-PRESSURE FLOW)<<<<<
============================================================================
  ELEVATION DATA: UPSTREAM(FEET) =   100.00  DOWNSTREAM(FEET) =    93.75
  FLOW LENGTH(FEET) =   125.00   MANNING'S N =  0.013
  ESTIMATED PIPE DIAMETER(INCH) INCREASED TO 18.000
  DEPTH OF FLOW IN  18.0 INCH PIPE IS   3.9 INCHES
  PIPE-FLOW VELOCITY(FEET/SEC.) =   8.17
  ESTIMATED PIPE DIAMETER(INCH) =  18.00    NUMBER OF PIPES =   1
  PIPE-FLOW(CFS) =       2.31
  PIPE TRAVEL TIME(MIN.) =   0.26    Tc(MIN.) =    5.37
  LONGEST FLOWPATH FROM NODE   1490.00 TO NODE   1495.00 =     475.00 FEET.

****************************************************************************
  FLOW PROCESS FROM NODE   1495.00 TO NODE   1495.00 IS CODE =   1
----------------------------------------------------------------------------
```

```
  >>>>>DESIGNATE INDEPENDENT STREAM FOR CONFLUENCE<<<<<
  >>>>>AND COMPUTE VARIOUS CONFLUENCED STREAM VALUES<<<<<
============================================================================
  TOTAL NUMBER OF STREAMS =  2
  CONFLUENCE VALUES USED FOR INDEPENDENT STREAM  2 ARE:
  TIME OF CONCENTRATION(MIN.) =    5.37
  RAINFALL INTENSITY(INCH/HR) =   4.33
  TOTAL STREAM AREA(ACRES) =     0.60
  PEAK FLOW RATE(CFS) AT CONFLUENCE =      2.31

  ** CONFLUENCE DATA **
  STREAM     RUNOFF       Tc      INTENSITY      AREA
  NUMBER      (CFS)     (MIN.)   (INCH/HOUR)    (ACRE)
      1      114.69    15.74        2.840         48.60
      2        2.31     5.37        4.330          0.60

  RAINFALL INTENSITY AND TIME OF CONCENTRATION RATIO
  CONFLUENCE FORMULA USED FOR  2 STREAMS.

  ** PEAK FLOW RATE TABLE **
  STREAM     RUNOFF      Tc      INTENSITY
  NUMBER      (CFS)    (MIN.)   (INCH/HOUR)
      1       77.55     5.37       4.330
      2      116.20    15.74       2.840

  COMPUTED CONFLUENCE ESTIMATES ARE AS FOLLOWS:
  PEAK FLOW RATE(CFS) =     116.20   Tc(MIN.) =   15.74
  TOTAL AREA(ACRES) =       49.2
  LONGEST FLOWPATH FROM NODE   1450.00 TO NODE   1495.00 =    7690.00 FEET.

****************************************************************************
  FLOW PROCESS FROM NODE   1495.00 TO NODE   1496.00 IS CODE =  31
----------------------------------------------------------------------------
  >>>>>COMPUTE PIPE-FLOW TRAVEL TIME THRU SUBAREA<<<<<
  >>>>>USING COMPUTER-ESTIMATED PIPESIZE (NON-PRESSURE FLOW)<<<<<
============================================================================
  ELEVATION DATA: UPSTREAM(FEET) =   100.00  DOWNSTREAM(FEET) =    99.60
  FLOW LENGTH(FEET) =    40.00   MANNING'S N =  0.013
  DEPTH OF FLOW IN  48.0 INCH PIPE IS  34.0 INCHES
  PIPE-FLOW VELOCITY(FEET/SEC.) =  12.20
  ESTIMATED PIPE DIAMETER(INCH) =  48.00    NUMBER OF PIPES =   1
  PIPE-FLOW(CFS) =     116.20
  PIPE TRAVEL TIME(MIN.) =   0.05    Tc(MIN.) =   15.80
  LONGEST FLOWPATH FROM NODE   1450.00 TO NODE   1496.00 =    7730.00 FEET.

****************************************************************************
  FLOW PROCESS FROM NODE   1496.00 TO NODE   1496.00 IS CODE =  81
----------------------------------------------------------------------------
  >>>>>ADDITION OF SUBAREA TO MAINLINE PEAK FLOW<<<<<
============================================================================
   100 YEAR RAINFALL INTENSITY(INCH/HOUR) =  2.836
  *USER SPECIFIED(SUBAREA):
  RESIDENTIAL (1. DU/AC OR LESS) RUNOFF COEFFICIENT = .4500
  S.C.S. CURVE NUMBER (AMC II) =   0
  AREA-AVERAGE RUNOFF COEFFICIENT = 0.7963
  SUBAREA AREA(ACRES) =    3.30   SUBAREA RUNOFF(CFS) =    4.21
  TOTAL AREA(ACRES) =       52.5   TOTAL RUNOFF(CFS) =     118.56
  TC(MIN.) =   15.80
```

```
****************************************************************************
  FLOW PROCESS FROM NODE   1496.00 TO NODE   1499.00 IS CODE =  31
----------------------------------------------------------------------------
  >>>>>COMPUTE PIPE-FLOW TRAVEL TIME THRU SUBAREA<<<<<
  >>>>>USING COMPUTER-ESTIMATED PIPESIZE (NON-PRESSURE FLOW)<<<<<
============================================================================
  ELEVATION DATA: UPSTREAM(FEET) =   100.00  DOWNSTREAM(FEET) =    98.35
  FLOW LENGTH(FEET) =   165.00   MANNING'S N =  0.013
  DEPTH OF FLOW IN  48.0 INCH PIPE IS  34.6 INCHES
  PIPE-FLOW VELOCITY(FEET/SEC.) =  12.24
  ESTIMATED PIPE DIAMETER(INCH) =  48.00    NUMBER OF PIPES =   1
  PIPE-FLOW(CFS) =     118.56
  PIPE TRAVEL TIME(MIN.) =   0.22    Tc(MIN.) =   16.02
  LONGEST FLOWPATH FROM NODE   1450.00 TO NODE   1499.00 =    7895.00 FEET.

****************************************************************************
  FLOW PROCESS FROM NODE   1499.00 TO NODE   1499.00 IS CODE =  11
----------------------------------------------------------------------------
  >>>>>CONFLUENCE MEMORY BANK # 1 WITH THE MAIN-STREAM MEMORY<<<<<
============================================================================

  ** MAIN STREAM CONFLUENCE DATA **
  STREAM     RUNOFF      Tc      INTENSITY     AREA
  NUMBER      (CFS)    (MIN.)   (INCH/HOUR)   (ACRE)
      1      118.56    16.02       2.818       52.50
  LONGEST FLOWPATH FROM NODE   1450.00 TO NODE   1499.00 =    7895.00 FEET.

  ** MEMORY BANK #  1 CONFLUENCE DATA **
  STREAM     RUNOFF      Tc      INTENSITY     AREA
  NUMBER      (CFS)    (MIN.)   (INCH/HOUR)   (ACRE)
      1      326.58    22.92       2.325      285.10
  LONGEST FLOWPATH FROM NODE   1400.00 TO NODE   1499.00 =    7925.00 FEET.

  ** PEAK FLOW RATE TABLE **
  STREAM    RUNOFF       Tc      INTENSITY
  NUMBER     (CFS)     (MIN.)   (INCH/HOUR)
      1     346.89      16.02        2.818
      2     424.39      22.92        2.325

  COMPUTED CONFLUENCE ESTIMATES ARE AS FOLLOWS:
  PEAK FLOW RATE(CFS) =     424.39   Tc(MIN.) =   22.92
  TOTAL AREA(ACRES) =      337.6

****************************************************************************
  FLOW PROCESS FROM NODE   1499.00 TO NODE   1499.00 IS CODE =  81
----------------------------------------------------------------------------
  >>>>>ADDITION OF SUBAREA TO MAINLINE PEAK FLOW<<<<<
============================================================================
   100 YEAR RAINFALL INTENSITY(INCH/HOUR) =  2.325
  *USER SPECIFIED(SUBAREA):
  RESIDENTIAL (1. DU/AC OR LESS) RUNOFF COEFFICIENT = .4500
  S.C.S. CURVE NUMBER (AMC II) =   0
  AREA-AVERAGE RUNOFF COEFFICIENT = 0.5337
  SUBAREA AREA(ACRES) =    8.50   SUBAREA RUNOFF(CFS) =    8.89
  TOTAL AREA(ACRES) =      346.1   TOTAL RUNOFF(CFS) =     429.44
  TC(MIN.) =   22.92
============================================================================
```

```
  END OF STUDY SUMMARY:
  TOTAL AREA(ACRES)     =      346.1  TC(MIN.) =     22.92
  PEAK FLOW RATE(CFS)   =     429.44
============================================================================
============================================================================
  END OF RATIONAL METHOD ANALYSIS
```

Modified Rational Method Output
[Post-project Detained]

```
****************************************************************************

            RATIONAL METHOD HYDROLOGY COMPUTER PROGRAM PACKAGE
            Reference: SAN DIEGO COUNTY FLOOD CONTROL DISTRICT
                         2003,1985,1981 HYDROLOGY MANUAL
         (c) Copyright 1982-2003 Advanced Engineering Software (aes)
             Ver. 1.5A Release Date: 01/01/2003  License ID 1261

                           Analysis prepared by:

                          RICK ENGINEERING COMPANY
                              5620 Friars Road
                        San Diego, California 92110
                      619-291-0707   Fax 619-291-4165

 ************************** DESCRIPTION OF STUDY **************************
* J-15013C SOUTHWEST VILLAGE                                               *
* 100-YEAR, 6-HOUR STORM EVENT                                             *
* BASIN 100 POST-PROJECT DETAINED                                          *
 **************************************************************************

  FILE NAME: S101HD00.RAT
  TIME/DATE OF STUDY: 17:43 07/06/2020
----------------------------------------------------------------------------
  USER SPECIFIED HYDROLOGY AND HYDRAULIC MODEL INFORMATION:
----------------------------------------------------------------------------
  USER SPECIFIED STORM EVENT(YEAR) = 100.00
  SPECIFIED MINIMUM PIPE SIZE(INCH) =  18.00
  SPECIFIED PERCENT OF GRADIENTS(DECIMAL) TO USE FOR FRICTION SLOPE = 0.90
  RAINFALL-INTENSITY ADJUSTMENT FACTOR = 1.000
  *USER SPECIFIED:
  NUMBER OF [TIME,INTENSITY] DATA PAIRS =  9
   1)   5.000;  4.400
   2)  10.000;  3.450
   3)  15.000;  2.900
   4)  20.000;  2.500
   5)  25.000;  2.200
   6)  30.000;  2.000
   7)  40.000;  1.700
   8)  50.000;  1.500
   9)  60.000;  1.300
  SAN DIEGO HYDROLOGY MANUAL "C"-VALUES USED FOR RATIONAL METHOD
  NOTE: ONLY PEAK CONFLUENCE VALUES CONSIDERED
  *USER-DEFINED STREET-SECTIONS FOR COUPLED PIPEFLOW AND STREETFLOW MODEL*
     HALF-  CROWN TO   STREET-CROSSFALL:   CURB  GUTTER-GEOMETRIES:  MANNING
     WIDTH  CROSSFALL  IN-  / OUT-/PARK-  HEIGHT  WIDTH  LIP   HIKE  FACTOR
NO.   (FT)     (FT)    SIDE / SIDE/ WAY    (FT)    (FT)  (FT)  (FT)    (n)
===   =====  =========  ================  ======  ===== ====== ===== =======
  1   30.0     20.0    0.018/0.018/0.020   0.67    2.00 0.0313 0.167 0.0150
```

```
  2   20.0     15.0    0.020/0.020/0.020   0.50    1.50 0.0100 0.125 0.0180

  GLOBAL STREET FLOW-DEPTH CONSTRAINTS:
    1. Relative Flow-Depth = -0.10 FEET
       as (Maximum Allowable Street Flow Depth) - (Top-of-Curb)
    2. (Depth)*(Velocity) Constraint =  6.0 (FT*FT/S)
  *SIZE PIPE WITH A FLOW CAPACITY GREATER THAN
   OR EQUAL TO THE UPSTREAM TRIBUTARY PIPE.*

****************************************************************************
  FLOW PROCESS FROM NODE    100.00 TO NODE    102.00 IS CODE =  21
----------------------------------------------------------------------------
  >>>>>RATIONAL METHOD INITIAL SUBAREA ANALYSIS<<<<<
============================================================================
  *USER SPECIFIED(SUBAREA):
  RURAL DEVELOPMENT RUNOFF COEFFICIENT = .4500
  S.C.S. CURVE NUMBER (AMC II) =   0
  INITIAL SUBAREA FLOW-LENGTH(FEET) =    75.00
  UPSTREAM ELEVATION(FEET) =    533.00
  DOWNSTREAM ELEVATION(FEET) =    532.00
  ELEVATION DIFFERENCE(FEET) =      1.00
  URBAN SUBAREA OVERLAND TIME OF FLOW(MIN.) =    9.206
   100 YEAR RAINFALL INTENSITY(INCH/HOUR) =  3.601
  SUBAREA RUNOFF(CFS) =      0.16
  TOTAL AREA(ACRES) =      0.10   TOTAL RUNOFF(CFS) =      0.16

****************************************************************************
  FLOW PROCESS FROM NODE    102.00 TO NODE    105.00 IS CODE =  51
----------------------------------------------------------------------------
  >>>>>COMPUTE TRAPEZOIDAL CHANNEL FLOW<<<<<
  >>>>>TRAVELTIME THRU SUBAREA (EXISTING ELEMENT)<<<<<
============================================================================
  ELEVATION DATA: UPSTREAM(FEET) =    532.00  DOWNSTREAM(FEET) =    504.00
  CHANNEL LENGTH THRU SUBAREA(FEET) =   629.00   CHANNEL SLOPE =  0.0445
  CHANNEL BASE(FEET) =    5.00   "Z" FACTOR =  10.000
  MANNING'S FACTOR = 0.025   MAXIMUM DEPTH(FEET) =  10.00
   100 YEAR RAINFALL INTENSITY(INCH/HOUR) =  3.214
  *USER SPECIFIED(SUBAREA):
  RURAL DEVELOPMENT RUNOFF COEFFICIENT = .4500
  S.C.S. CURVE NUMBER (AMC II) =   0
  TRAVEL TIME COMPUTED USING ESTIMATED FLOW(CFS) =      5.03
  TRAVEL TIME THRU SUBAREA BASED ON VELOCITY(FEET/SEC.) =   3.56
  AVERAGE FLOW DEPTH(FEET) =   0.20   TRAVEL TIME(MIN.) =   2.94
  Tc(MIN.) =  12.15
  SUBAREA AREA(ACRES) =     6.70       SUBAREA RUNOFF(CFS) =    9.69
  TOTAL AREA(ACRES) =      6.80         PEAK FLOW RATE(CFS) =       9.85

  END OF SUBAREA CHANNEL FLOW HYDRAULICS:
  DEPTH(FEET) =  0.29   FLOW VELOCITY(FEET/SEC.) =   4.40
  LONGEST FLOWPATH FROM NODE    100.00 TO NODE    105.00 =   704.00 FEET.
```

```
****************************************************************************
  FLOW PROCESS FROM NODE    105.00 TO NODE    110.00 IS CODE =  51
----------------------------------------------------------------------------
  >>>>>COMPUTE TRAPEZOIDAL CHANNEL FLOW<<<<<
  >>>>>TRAVELTIME THRU SUBAREA (EXISTING ELEMENT)<<<<<
============================================================================
  ELEVATION DATA: UPSTREAM(FEET) =    504.00  DOWNSTREAM(FEET) =    478.00
  CHANNEL LENGTH THRU SUBAREA(FEET) =   332.00   CHANNEL SLOPE =  0.0783
  CHANNEL BASE(FEET) =    3.00   "Z" FACTOR =   5.000
  MANNING'S FACTOR = 0.025   MAXIMUM DEPTH(FEET) =  10.00
   100 YEAR RAINFALL INTENSITY(INCH/HOUR) =  3.121
  *USER SPECIFIED(SUBAREA):
  RURAL DEVELOPMENT RUNOFF COEFFICIENT = .4500
  S.C.S. CURVE NUMBER (AMC II) =   0
  TRAVEL TIME COMPUTED USING ESTIMATED FLOW(CFS) =     10.55
  TRAVEL TIME THRU SUBAREA BASED ON VELOCITY(FEET/SEC.) =   6.59
  AVERAGE FLOW DEPTH(FEET) =   0.34   TRAVEL TIME(MIN.) =   0.84
  Tc(MIN.) =  12.99
  SUBAREA AREA(ACRES) =     1.00       SUBAREA RUNOFF(CFS) =    1.40
  TOTAL AREA(ACRES) =      7.80         PEAK FLOW RATE(CFS) =      11.26

  END OF SUBAREA CHANNEL FLOW HYDRAULICS:
  DEPTH(FEET) =  0.35   FLOW VELOCITY(FEET/SEC.) =   6.67
  LONGEST FLOWPATH FROM NODE    100.00 TO NODE    110.00 =  1036.00 FEET.

****************************************************************************
  FLOW PROCESS FROM NODE    110.00 TO NODE    115.00 IS CODE =  51
----------------------------------------------------------------------------
  >>>>>COMPUTE TRAPEZOIDAL CHANNEL FLOW<<<<<
  >>>>>TRAVELTIME THRU SUBAREA (EXISTING ELEMENT)<<<<<
============================================================================
  ELEVATION DATA: UPSTREAM(FEET) =    478.00  DOWNSTREAM(FEET) =    472.00
  CHANNEL LENGTH THRU SUBAREA(FEET) =   145.00   CHANNEL SLOPE =  0.0414
  CHANNEL BASE(FEET) =    5.00   "Z" FACTOR =   5.000
  MANNING'S FACTOR = 0.025   MAXIMUM DEPTH(FEET) =  10.00
   100 YEAR RAINFALL INTENSITY(INCH/HOUR) =  3.069
  *USER SPECIFIED(SUBAREA):
  RURAL DEVELOPMENT RUNOFF COEFFICIENT = .4500
  S.C.S. CURVE NUMBER (AMC II) =   0
  TRAVEL TIME COMPUTED USING ESTIMATED FLOW(CFS) =     11.60
  TRAVEL TIME THRU SUBAREA BASED ON VELOCITY(FEET/SEC.) =   5.08
  AVERAGE FLOW DEPTH(FEET) =   0.34   TRAVEL TIME(MIN.) =   0.48
  Tc(MIN.) =  13.46
  SUBAREA AREA(ACRES) =     0.50       SUBAREA RUNOFF(CFS) =    0.69
  TOTAL AREA(ACRES) =      8.30         PEAK FLOW RATE(CFS) =      11.95

  END OF SUBAREA CHANNEL FLOW HYDRAULICS:
  DEPTH(FEET) =  0.35   FLOW VELOCITY(FEET/SEC.) =   5.09
  LONGEST FLOWPATH FROM NODE    100.00 TO NODE    115.00 =  1181.00 FEET.
```

```
****************************************************************************
  FLOW PROCESS FROM NODE    115.00 TO NODE    170.00 IS CODE =  41
----------------------------------------------------------------------------
  >>>>>COMPUTE PIPE-FLOW TRAVEL TIME THRU SUBAREA<<<<<
  >>>>>USING USER-SPECIFIED PIPESIZE (EXISTING ELEMENT)<<<<<
============================================================================
  ELEVATION DATA: UPSTREAM(FEET) =   468.00  DOWNSTREAM(FEET) =   467.00
  FLOW LENGTH(FEET) =   127.00   MANNING'S N =  0.013
  DEPTH OF FLOW IN  24.0 INCH PIPE IS  13.8 INCHES
  PIPE-FLOW VELOCITY(FEET/SEC.) =   6.40
  GIVEN PIPE DIAMETER(INCH) =  24.00    NUMBER OF PIPES =   1
  PIPE-FLOW(CFS) =     11.95
  PIPE TRAVEL TIME(MIN.) =   0.33    Tc(MIN.) =  13.79
  LONGEST FLOWPATH FROM NODE    100.00 TO NODE    170.00 =  1308.00 FEET.

****************************************************************************
  FLOW PROCESS FROM NODE    170.00 TO NODE    170.00 IS CODE =   1
----------------------------------------------------------------------------
  >>>>>DESIGNATE INDEPENDENT STREAM FOR CONFLUENCE<<<<<
============================================================================
  TOTAL NUMBER OF STREAMS =  3
  CONFLUENCE VALUES USED FOR INDEPENDENT STREAM  1 ARE:
  TIME OF CONCENTRATION(MIN.) =  13.79
  RAINFALL INTENSITY(INCH/HR) =   3.03
  TOTAL STREAM AREA(ACRES) =     8.30
  PEAK FLOW RATE(CFS) AT CONFLUENCE =     11.95

****************************************************************************
  FLOW PROCESS FROM NODE    120.00 TO NODE    122.00 IS CODE =  21
----------------------------------------------------------------------------
  >>>>>RATIONAL METHOD INITIAL SUBAREA ANALYSIS<<<<<
============================================================================
  *USER SPECIFIED(SUBAREA):
  INDUSTRIAL DEVELOPMENT RUNOFF COEFFICIENT = .4500
  S.C.S. CURVE NUMBER (AMC II) =   0
  INITIAL SUBAREA FLOW-LENGTH(FEET) =    93.00
  UPSTREAM ELEVATION(FEET) =    503.00
  DOWNSTREAM ELEVATION(FEET) =    498.00
  ELEVATION DIFFERENCE(FEET) =      5.00
  URBAN SUBAREA OVERLAND TIME OF FLOW(MIN.) =    6.441
  *CAUTION: SUBAREA SLOPE EXCEEDS COUNTY NOMOGRAPH
   DEFINITION. EXTRAPOLATION OF NOMOGRAPH USED.
   100 YEAR RAINFALL INTENSITY(INCH/HOUR) =  4.126
  SUBAREA RUNOFF(CFS) =      0.19
  TOTAL AREA(ACRES) =      0.10   TOTAL RUNOFF(CFS) =      0.19

****************************************************************************
  FLOW PROCESS FROM NODE    122.00 TO NODE    125.00 IS CODE =  51
----------------------------------------------------------------------------
```

```
  >>>>>COMPUTE TRAPEZOIDAL CHANNEL FLOW<<<<<
  >>>>>TRAVELTIME THRU SUBAREA (EXISTING ELEMENT)<<<<<
================================================================================
  ELEVATION DATA: UPSTREAM(FEET) =    498.00  DOWNSTREAM(FEET) =    474.00
  CHANNEL LENGTH THRU SUBAREA(FEET) =    98.00   CHANNEL SLOPE =  0.2449
  CHANNEL BASE(FEET) =   10.00   "Z" FACTOR =  12.000
  MANNING'S FACTOR = 0.025   MAXIMUM DEPTH(FEET) =   5.00
   100 YEAR RAINFALL INTENSITY(INCH/HOUR) =  3.969
  *USER SPECIFIED(SUBAREA):
  RURAL DEVELOPMENT RUNOFF COEFFICIENT = .4500
  S.C.S. CURVE NUMBER (AMC II) =   0
  TRAVEL TIME COMPUTED USING ESTIMATED FLOW(CFS) =      0.36
  TRAVEL TIME THRU SUBAREA BASED ON VELOCITY(FEET/SEC.) =   1.97
  AVERAGE FLOW DEPTH(FEET) =   0.02   TRAVEL TIME(MIN.) =   0.83
  Tc(MIN.) =   7.27
  SUBAREA AREA(ACRES) =     0.20       SUBAREA RUNOFF(CFS) =    0.36
  TOTAL AREA(ACRES) =      0.30         PEAK FLOW RATE(CFS) =       0.54

  END OF SUBAREA CHANNEL FLOW HYDRAULICS:
  DEPTH(FEET) =  0.02   FLOW VELOCITY(FEET/SEC.) =   2.65
  LONGEST FLOWPATH FROM NODE    120.00 TO NODE    125.00 =   191.00 FEET.

****************************************************************************
  FLOW PROCESS FROM NODE    125.00 TO NODE    127.00 IS CODE =  41
----------------------------------------------------------------------------
  >>>>>COMPUTE PIPE-FLOW TRAVEL TIME THRU SUBAREA<<<<<
  >>>>>USING USER-SPECIFIED PIPESIZE (EXISTING ELEMENT)<<<<<
================================================================================
  ELEVATION DATA: UPSTREAM(FEET) =   470.00  DOWNSTREAM(FEET) =   468.00
  FLOW LENGTH(FEET) =   331.00   MANNING'S N =  0.013
  DEPTH OF FLOW IN  18.0 INCH PIPE IS   3.2 INCHES
  PIPE-FLOW VELOCITY(FEET/SEC.) =   2.51
  GIVEN PIPE DIAMETER(INCH) =  18.00    NUMBER OF PIPES =   1
  PIPE-FLOW(CFS) =      0.54
  PIPE TRAVEL TIME(MIN.) =   2.19    Tc(MIN.) =   9.46
  LONGEST FLOWPATH FROM NODE    120.00 TO NODE    127.00 =   522.00 FEET.

****************************************************************************
  FLOW PROCESS FROM NODE    127.00 TO NODE    127.00 IS CODE =  81
----------------------------------------------------------------------------
  >>>>>ADDITION OF SUBAREA TO MAINLINE PEAK FLOW<<<<<
================================================================================
   100 YEAR RAINFALL INTENSITY(INCH/HOUR) =  3.552
  *USER SPECIFIED(SUBAREA):
  RURAL DEVELOPMENT RUNOFF COEFFICIENT = .4500
  S.C.S. CURVE NUMBER (AMC II) =   0
  SUBAREA AREA(ACRES) =    0.40   SUBAREA RUNOFF(CFS) =    0.64
  TOTAL AREA(ACRES) =      0.70   TOTAL RUNOFF(CFS) =    1.18
  TC(MIN.) =   9.46
```

```
****************************************************************************
  FLOW PROCESS FROM NODE    127.00 TO NODE    170.00 IS CODE =  41
----------------------------------------------------------------------------
  >>>>>COMPUTE PIPE-FLOW TRAVEL TIME THRU SUBAREA<<<<<
  >>>>>USING USER-SPECIFIED PIPESIZE (EXISTING ELEMENT)<<<<<
============================================================================
  ELEVATION DATA: UPSTREAM(FEET) =   468.00  DOWNSTREAM(FEET) =   467.00
  FLOW LENGTH(FEET) =    72.00   MANNING'S N =  0.013
  DEPTH OF FLOW IN  18.0 INCH PIPE IS   3.9 INCHES
  PIPE-FLOW VELOCITY(FEET/SEC.) =   4.27
  GIVEN PIPE DIAMETER(INCH) =  18.00    NUMBER OF PIPES =   1
  PIPE-FLOW(CFS) =      1.18
  PIPE TRAVEL TIME(MIN.) =   0.28    Tc(MIN.) =   9.75
  LONGEST FLOWPATH FROM NODE    120.00 TO NODE    170.00 =   594.00 FEET.

****************************************************************************
  FLOW PROCESS FROM NODE    170.00 TO NODE    170.00 IS CODE =   1
----------------------------------------------------------------------------
  >>>>>DESIGNATE INDEPENDENT STREAM FOR CONFLUENCE<<<<<
============================================================================
  TOTAL NUMBER OF STREAMS =  3
  CONFLUENCE VALUES USED FOR INDEPENDENT STREAM  2 ARE:
  TIME OF CONCENTRATION(MIN.) =   9.75
  RAINFALL INTENSITY(INCH/HR) =   3.50
  TOTAL STREAM AREA(ACRES) =     0.70
  PEAK FLOW RATE(CFS) AT CONFLUENCE =      1.18

****************************************************************************
  FLOW PROCESS FROM NODE    130.00 TO NODE    132.00 IS CODE =  21
----------------------------------------------------------------------------
  >>>>>RATIONAL METHOD INITIAL SUBAREA ANALYSIS<<<<<
============================================================================
  *USER SPECIFIED(SUBAREA):
  INDUSTRIAL DEVELOPMENT RUNOFF COEFFICIENT = .9500
  S.C.S. CURVE NUMBER (AMC II) =   0
  INITIAL SUBAREA FLOW-LENGTH(FEET) =    94.00
  UPSTREAM ELEVATION(FEET) =    492.00
  DOWNSTREAM ELEVATION(FEET) =    491.00
  ELEVATION DIFFERENCE(FEET) =      1.00
  URBAN SUBAREA OVERLAND TIME OF FLOW(MIN.) =    2.564
  TIME OF CONCENTRATION ASSUMED AS 6-MIN.
   100 YEAR RAINFALL INTENSITY(INCH/HOUR) =  4.210
  SUBAREA RUNOFF(CFS) =      0.40
  TOTAL AREA(ACRES) =      0.10   TOTAL RUNOFF(CFS) =      0.40

****************************************************************************
  FLOW PROCESS FROM NODE    132.00 TO NODE    135.00 IS CODE =  62
----------------------------------------------------------------------------
  >>>>>COMPUTE STREET FLOW TRAVEL TIME THRU SUBAREA<<<<<
  >>>>>(STREET TABLE SECTION #  2 USED)<<<<<
```

```
============================================================================
  UPSTREAM ELEVATION(FEET) =  491.00  DOWNSTREAM ELEVATION(FEET) =  489.50
  STREET LENGTH(FEET) =   341.00   CURB HEIGHT(INCHES) =  6.0
  STREET HALFWIDTH(FEET) = 20.00

  DISTANCE FROM CROWN TO CROSSFALL GRADEBREAK(FEET) =  15.00
  INSIDE STREET CROSSFALL(DECIMAL) =  0.020
  OUTSIDE STREET CROSSFALL(DECIMAL)  =  0.020

  SPECIFIED NUMBER OF HALFSTREETS CARRYING RUNOFF =  2
  STREET PARKWAY CROSSFALL(DECIMAL)  =  0.020
  Manning's FRICTION FACTOR for Streetflow Section(curb-to-curb) =   0.0180
  Manning's FRICTION FACTOR for Back-of-Walk Flow Section =   0.0200

    **TRAVEL TIME COMPUTED USING ESTIMATED FLOW(CFS) =       0.71
    STREETFLOW MODEL RESULTS USING ESTIMATED FLOW:
    STREET FLOW DEPTH(FEET) =  0.21
    HALFSTREET FLOOD WIDTH(FEET) =    5.50
    AVERAGE FLOW VELOCITY(FEET/SEC.) =    0.91
    PRODUCT OF DEPTH&VELOCITY(FT*FT/SEC.) =    0.20
  STREET FLOW TRAVEL TIME(MIN.) =   6.26   Tc(MIN.) =  12.26
   100 YEAR RAINFALL INTENSITY(INCH/HOUR) =  3.202
  *USER SPECIFIED(SUBAREA):
  INDUSTRIAL DEVELOPMENT RUNOFF COEFFICIENT = .9500
  S.C.S. CURVE NUMBER (AMC II) =   0
  SUBAREA AREA(ACRES) =    0.20      SUBAREA RUNOFF(CFS) =    0.61
  TOTAL AREA(ACRES) =      0.30        PEAK FLOW RATE(CFS) =       1.01

  END OF SUBAREA STREET FLOW HYDRAULICS:
  DEPTH(FEET) = 0.24   HALFSTREET FLOOD WIDTH(FEET) =   6.55
  FLOW VELOCITY(FEET/SEC.) =  0.98   DEPTH*VELOCITY(FT*FT/SEC.) =   0.23
  LONGEST FLOWPATH FROM NODE    130.00 TO NODE    135.00 =   435.00 FEET.

****************************************************************************
  FLOW PROCESS FROM NODE    135.00 TO NODE    135.00 IS CODE =  81
----------------------------------------------------------------------------
  >>>>>ADDITION OF SUBAREA TO MAINLINE PEAK FLOW<<<<<
============================================================================
   100 YEAR RAINFALL INTENSITY(INCH/HOUR) =  3.202
  *USER SPECIFIED(SUBAREA):
  SINGLE FAMILY DEVELOPMENT RUNOFF COEFFICIENT = .7900
  S.C.S. CURVE NUMBER (AMC II) =   0
  SUBAREA AREA(ACRES) =    1.10   SUBAREA RUNOFF(CFS) =    2.78
  TOTAL AREA(ACRES) =      1.40   TOTAL RUNOFF(CFS) =    3.79
  TC(MIN.) =  12.26

****************************************************************************
  FLOW PROCESS FROM NODE    135.00 TO NODE    140.00 IS CODE =  41
----------------------------------------------------------------------------
  >>>>>COMPUTE PIPE-FLOW TRAVEL TIME THRU SUBAREA<<<<<
```

```
  >>>>>USING USER-SPECIFIED PIPESIZE (EXISTING ELEMENT)<<<<<
============================================================================
  ELEVATION DATA: UPSTREAM(FEET) =   485.00  DOWNSTREAM(FEET) =   484.50
  FLOW LENGTH(FEET) =     3.00   MANNING'S N =  0.013
  DEPTH OF FLOW IN  24.0 INCH PIPE IS   3.4 INCHES
  PIPE-FLOW VELOCITY(FEET/SEC.) =  13.94
  GIVEN PIPE DIAMETER(INCH) =  24.00    NUMBER OF PIPES =   1
  PIPE-FLOW(CFS) =      3.79
  PIPE TRAVEL TIME(MIN.) =   0.00    Tc(MIN.) =  12.26
  LONGEST FLOWPATH FROM NODE    130.00 TO NODE    140.00 =   438.00 FEET.

****************************************************************************
  FLOW PROCESS FROM NODE    140.00 TO NODE    140.00 IS CODE =  81
----------------------------------------------------------------------------
  >>>>>ADDITION OF SUBAREA TO MAINLINE PEAK FLOW<<<<<
============================================================================
   100 YEAR RAINFALL INTENSITY(INCH/HOUR) =  3.201
  *USER SPECIFIED(SUBAREA):
  SINGLE FAMILY DEVELOPMENT RUNOFF COEFFICIENT = .8000
  S.C.S. CURVE NUMBER (AMC II) =   0
  SUBAREA AREA(ACRES) =    0.80   SUBAREA RUNOFF(CFS) =    2.05
  TOTAL AREA(ACRES) =      2.20   TOTAL RUNOFF(CFS) =    5.84
  TC(MIN.) =  12.26

****************************************************************************
  FLOW PROCESS FROM NODE    140.00 TO NODE    150.00 IS CODE =  41
----------------------------------------------------------------------------
  >>>>>COMPUTE PIPE-FLOW TRAVEL TIME THRU SUBAREA<<<<<
  >>>>>USING USER-SPECIFIED PIPESIZE (EXISTING ELEMENT)<<<<<
============================================================================
  ELEVATION DATA: UPSTREAM(FEET) =   484.50  DOWNSTREAM(FEET) =   482.50
  FLOW LENGTH(FEET) =   140.00   MANNING'S N =  0.013
  DEPTH OF FLOW IN  24.0 INCH PIPE IS   7.8 INCHES
  PIPE-FLOW VELOCITY(FEET/SEC.) =   6.61
  GIVEN PIPE DIAMETER(INCH) =  24.00    NUMBER OF PIPES =   1
  PIPE-FLOW(CFS) =      5.84
  PIPE TRAVEL TIME(MIN.) =   0.35    Tc(MIN.) =  12.61
  LONGEST FLOWPATH FROM NODE    130.00 TO NODE    150.00 =   578.00 FEET.

****************************************************************************
  FLOW PROCESS FROM NODE    150.00 TO NODE    150.00 IS CODE =  81
----------------------------------------------------------------------------
  >>>>>ADDITION OF SUBAREA TO MAINLINE PEAK FLOW<<<<<
============================================================================
   100 YEAR RAINFALL INTENSITY(INCH/HOUR) =  3.163
  *USER SPECIFIED(SUBAREA):
  SINGLE FAMILY DEVELOPMENT RUNOFF COEFFICIENT = .7500
  S.C.S. CURVE NUMBER (AMC II) =   0
  SUBAREA AREA(ACRES) =    0.20   SUBAREA RUNOFF(CFS) =    0.47
  TOTAL AREA(ACRES) =      2.40   TOTAL RUNOFF(CFS) =    6.31
```

```
  TC(MIN.) =  12.61

****************************************************************************
  FLOW PROCESS FROM NODE    150.00 TO NODE    150.00 IS CODE =  81
----------------------------------------------------------------------------
  >>>>>ADDITION OF SUBAREA TO MAINLINE PEAK FLOW<<<<<
============================================================================
   100 YEAR RAINFALL INTENSITY(INCH/HOUR) =  3.163
  *USER SPECIFIED(SUBAREA):
  SINGLE FAMILY DEVELOPMENT RUNOFF COEFFICIENT = .8500
  S.C.S. CURVE NUMBER (AMC II) =   0
  SUBAREA AREA(ACRES) =    1.30   SUBAREA RUNOFF(CFS) =    3.49
  TOTAL AREA(ACRES) =      3.70   TOTAL RUNOFF(CFS) =    9.81
  TC(MIN.) =  12.61

****************************************************************************
  FLOW PROCESS FROM NODE    150.00 TO NODE    160.00 IS CODE =  41
----------------------------------------------------------------------------
  >>>>>COMPUTE PIPE-FLOW TRAVEL TIME THRU SUBAREA<<<<<
  >>>>>USING USER-SPECIFIED PIPESIZE (EXISTING ELEMENT)<<<<<
============================================================================
  ELEVATION DATA: UPSTREAM(FEET) =   482.50  DOWNSTREAM(FEET) =   482.00
  FLOW LENGTH(FEET) =    30.00   MANNING'S N =  0.013
  DEPTH OF FLOW IN  24.0 INCH PIPE IS   9.9 INCHES
  PIPE-FLOW VELOCITY(FEET/SEC.) =   8.07
  GIVEN PIPE DIAMETER(INCH) =  24.00    NUMBER OF PIPES =   1
  PIPE-FLOW(CFS) =      9.81
  PIPE TRAVEL TIME(MIN.) =   0.06    Tc(MIN.) =  12.67
  LONGEST FLOWPATH FROM NODE    130.00 TO NODE    160.00 =   608.00 FEET.

****************************************************************************
  FLOW PROCESS FROM NODE    160.00 TO NODE    160.00 IS CODE =  81
----------------------------------------------------------------------------
  >>>>>ADDITION OF SUBAREA TO MAINLINE PEAK FLOW<<<<<
============================================================================
   100 YEAR RAINFALL INTENSITY(INCH/HOUR) =  3.156
  *USER SPECIFIED(SUBAREA):
  SINGLE FAMILY DEVELOPMENT RUNOFF COEFFICIENT = .8000
  S.C.S. CURVE NUMBER (AMC II) =   0
  SUBAREA AREA(ACRES) =    0.80   SUBAREA RUNOFF(CFS) =    2.02
  TOTAL AREA(ACRES) =      4.50   TOTAL RUNOFF(CFS) =   11.83
  TC(MIN.) =  12.67

****************************************************************************
  FLOW PROCESS FROM NODE    160.00 TO NODE    160.00 IS CODE =  81
----------------------------------------------------------------------------
  >>>>>ADDITION OF SUBAREA TO MAINLINE PEAK FLOW<<<<<
============================================================================
   100 YEAR RAINFALL INTENSITY(INCH/HOUR) =  3.156
  *USER SPECIFIED(SUBAREA):
```

```
  SINGLE FAMILY DEVELOPMENT RUNOFF COEFFICIENT = .8400
  S.C.S. CURVE NUMBER (AMC II) =   0
  SUBAREA AREA(ACRES) =    0.90   SUBAREA RUNOFF(CFS) =    2.39
  TOTAL AREA(ACRES) =      5.40   TOTAL RUNOFF(CFS) =   14.21
  TC(MIN.) =  12.67

****************************************************************************
  FLOW PROCESS FROM NODE    160.00 TO NODE    170.00 IS CODE =  41
----------------------------------------------------------------------------
  >>>>>COMPUTE PIPE-FLOW TRAVEL TIME THRU SUBAREA<<<<<
  >>>>>USING USER-SPECIFIED PIPESIZE (EXISTING ELEMENT)<<<<<
============================================================================
  ELEVATION DATA: UPSTREAM(FEET) =   482.00  DOWNSTREAM(FEET) =   467.00
  FLOW LENGTH(FEET) =   125.00   MANNING'S N =  0.013
  DEPTH OF FLOW IN  24.0 INCH PIPE IS   7.1 INCHES
  PIPE-FLOW VELOCITY(FEET/SEC.) =  18.27
  GIVEN PIPE DIAMETER(INCH) =  24.00    NUMBER OF PIPES =   1
  PIPE-FLOW(CFS) =     14.21
  PIPE TRAVEL TIME(MIN.) =   0.11    Tc(MIN.) =  12.79
  LONGEST FLOWPATH FROM NODE    130.00 TO NODE    170.00 =   733.00 FEET.

+--------------------------------------------------------------------------+
| Q100 = 3.4CFS ; T_C = 23.6 MIN ; A = 5.4 AC                              |
|                                                                          |
|                                                                          |
+--------------------------------------------------------------------------+

****************************************************************************
  FLOW PROCESS FROM NODE    170.00 TO NODE    170.00 IS CODE =   7
----------------------------------------------------------------------------
  >>>>>USER SPECIFIED HYDROLOGY INFORMATION AT NODE<<<<<
============================================================================
  USER-SPECIFIED VALUES ARE AS FOLLOWS:
  TC(MIN) =  23.60   RAIN INTENSITY(INCH/HOUR) =  2.28
  TOTAL AREA(ACRES) =     5.40   TOTAL RUNOFF(CFS) =      3.40

****************************************************************************
  FLOW PROCESS FROM NODE    170.00 TO NODE    170.00 IS CODE =   1
----------------------------------------------------------------------------
  >>>>>DESIGNATE INDEPENDENT STREAM FOR CONFLUENCE<<<<<
  >>>>>AND COMPUTE VARIOUS CONFLUENCED STREAM VALUES<<<<<
============================================================================
  TOTAL NUMBER OF STREAMS =  3
  CONFLUENCE VALUES USED FOR INDEPENDENT STREAM  3 ARE:
  TIME OF CONCENTRATION(MIN.) =  23.60
  RAINFALL INTENSITY(INCH/HR) =   2.28
  TOTAL STREAM AREA(ACRES) =     5.40
  PEAK FLOW RATE(CFS) AT CONFLUENCE =      3.40

  ** CONFLUENCE DATA **
```

```
  STREAM     RUNOFF      Tc      INTENSITY      AREA
  NUMBER      (CFS)    (MIN.)   (INCH/HOUR)    (ACRE)
      1       11.95    13.79        3.033          8.30
      2        1.18     9.75        3.498          0.70
      3        3.40    23.60        2.284          5.40

  RAINFALL INTENSITY AND TIME OF CONCENTRATION RATIO
  CONFLUENCE FORMULA USED FOR  3 STREAMS.

  ** PEAK FLOW RATE TABLE **
  STREAM     RUNOFF      Tc      INTENSITY
  NUMBER      (CFS)    (MIN.)   (INCH/HOUR)
      1       13.76     9.75      3.498
      2       15.53    13.79      3.033
      3       13.17    23.60      2.284

  COMPUTED CONFLUENCE ESTIMATES ARE AS FOLLOWS:
  PEAK FLOW RATE(CFS) =     15.53   Tc(MIN.) =   13.79
  TOTAL AREA(ACRES) =     14.40
  LONGEST FLOWPATH FROM NODE    100.00 TO NODE    170.00 =  1308.00 FEET.

****************************************************************************
  FLOW PROCESS FROM NODE    170.00 TO NODE    170.00 IS CODE =  81
----------------------------------------------------------------------------
  >>>>>ADDITION OF SUBAREA TO MAINLINE PEAK FLOW<<<<<
============================================================================
   100 YEAR RAINFALL INTENSITY(INCH/HOUR) =  3.033
  *USER SPECIFIED(SUBAREA):
  RURAL DEVELOPMENT RUNOFF COEFFICIENT = .4500
  S.C.S. CURVE NUMBER (AMC II) =   0
  SUBAREA AREA(ACRES) =    0.40   SUBAREA RUNOFF(CFS) =    0.55
  TOTAL AREA(ACRES) =     14.80   TOTAL RUNOFF(CFS) =   16.08
  TC(MIN.) =  13.79

****************************************************************************
  FLOW PROCESS FROM NODE    170.00 TO NODE    170.00 IS CODE =  81
----------------------------------------------------------------------------
  >>>>>ADDITION OF SUBAREA TO MAINLINE PEAK FLOW<<<<<
============================================================================
   100 YEAR RAINFALL INTENSITY(INCH/HOUR) =  3.033
  *USER SPECIFIED(SUBAREA):
  RURAL DEVELOPMENT RUNOFF COEFFICIENT = .4500
  S.C.S. CURVE NUMBER (AMC II) =   0
  SUBAREA AREA(ACRES) =    0.40   SUBAREA RUNOFF(CFS) =    0.55
  TOTAL AREA(ACRES) =     15.20   TOTAL RUNOFF(CFS) =   16.62
  TC(MIN.) =  13.79

****************************************************************************
  FLOW PROCESS FROM NODE    170.00 TO NODE    180.00 IS CODE =  41
----------------------------------------------------------------------------
```

```
  >>>>>COMPUTE PIPE-FLOW TRAVEL TIME THRU SUBAREA<<<<<
  >>>>>USING USER-SPECIFIED PIPESIZE (EXISTING ELEMENT)<<<<<
============================================================================
  ELEVATION DATA: UPSTREAM(FEET) =   467.00  DOWNSTREAM(FEET) =   400.00
  FLOW LENGTH(FEET) =   172.00   MANNING'S N =  0.013
  DEPTH OF FLOW IN  36.0 INCH PIPE IS   5.0 INCHES
  PIPE-FLOW VELOCITY(FEET/SEC.) =  27.70
  GIVEN PIPE DIAMETER(INCH) =  36.00    NUMBER OF PIPES =   1
  PIPE-FLOW(CFS) =     16.62
  PIPE TRAVEL TIME(MIN.) =   0.10    Tc(MIN.) =  13.90
  LONGEST FLOWPATH FROM NODE    100.00 TO NODE    180.00 =  1480.00 FEET.

****************************************************************************
  FLOW PROCESS FROM NODE    180.00 TO NODE    180.00 IS CODE =  81
----------------------------------------------------------------------------
  >>>>>ADDITION OF SUBAREA TO MAINLINE PEAK FLOW<<<<<
============================================================================
   100 YEAR RAINFALL INTENSITY(INCH/HOUR) =  3.021
  *USER SPECIFIED(SUBAREA):
  RURAL DEVELOPMENT RUNOFF COEFFICIENT = .4500
  S.C.S. CURVE NUMBER (AMC II) =   0
  SUBAREA AREA(ACRES) =    0.80   SUBAREA RUNOFF(CFS) =    1.09
  TOTAL AREA(ACRES) =     16.00   TOTAL RUNOFF(CFS) =   17.71
  TC(MIN.) =  13.90

****************************************************************************
  FLOW PROCESS FROM NODE    180.00 TO NODE    180.00 IS CODE =  81
----------------------------------------------------------------------------
  >>>>>ADDITION OF SUBAREA TO MAINLINE PEAK FLOW<<<<<
============================================================================
   100 YEAR RAINFALL INTENSITY(INCH/HOUR) =  3.021
  *USER SPECIFIED(SUBAREA):
  RURAL DEVELOPMENT RUNOFF COEFFICIENT = .4500
  S.C.S. CURVE NUMBER (AMC II) =   0
  SUBAREA AREA(ACRES) =    0.50   SUBAREA RUNOFF(CFS) =    0.68
  TOTAL AREA(ACRES) =     16.50   TOTAL RUNOFF(CFS) =   18.39
  TC(MIN.) =  13.90
============================================================================
  END OF STUDY SUMMARY:
  TOTAL AREA(ACRES)     =     16.50  TC(MIN.) =     13.90
  PEAK FLOW RATE(CFS)   =     18.39
============================================================================
============================================================================
  END OF RATIONAL METHOD ANALYSIS
```

```
****************************************************************************

            RATIONAL METHOD HYDROLOGY COMPUTER PROGRAM PACKAGE
            Reference: SAN DIEGO COUNTY FLOOD CONTROL DISTRICT
                         2003,1985,1981 HYDROLOGY MANUAL
         (c) Copyright 1982-2003 Advanced Engineering Software (aes)
             Ver. 1.5A Release Date: 01/01/2003  License ID 1261

                          Analysis prepared by:

                         RICK ENGINEERING COMPANY
                             5620 Friars Road
                        San Diego, California 92110
                      619-291-0707   Fax 619-291-4165

 ************************** DESCRIPTION OF STUDY **************************
* J-15013C SOUTHWEST VILLAGE                                               *
* 100-YEAR, 6-HOUR STORM EVENT / C=0.45 FOR OFFSITE AREAS                  *
* BASIN 200 POST PROJECT DETAINED                                          *
 **************************************************************************

  FILE NAME: S102HD00.RAT
  TIME/DATE OF STUDY: 17:49 07/06/2020
----------------------------------------------------------------------------
  USER SPECIFIED HYDROLOGY AND HYDRAULIC MODEL INFORMATION:
----------------------------------------------------------------------------
  USER SPECIFIED STORM EVENT(YEAR) = 100.00
  SPECIFIED MINIMUM PIPE SIZE(INCH) =  18.00
  SPECIFIED PERCENT OF GRADIENTS(DECIMAL) TO USE FOR FRICTION SLOPE = 0.90
  RAINFALL-INTENSITY ADJUSTMENT FACTOR = 1.000
  *USER SPECIFIED:
  NUMBER OF [TIME,INTENSITY] DATA PAIRS =  9
   1)   5.000;  4.400
   2)  10.000;  3.450
   3)  15.000;  2.900
   4)  20.000;  2.500
   5)  25.000;  2.200
   6)  30.000;  2.000
   7)  40.000;  1.700
   8)  50.000;  1.500
   9)  60.000;  1.300
  SAN DIEGO HYDROLOGY MANUAL "C"-VALUES USED FOR RATIONAL METHOD
  NOTE: ONLY PEAK CONFLUENCE VALUES CONSIDERED
  *USER-DEFINED STREET-SECTIONS FOR COUPLED PIPEFLOW AND STREETFLOW MODEL*
     HALF-  CROWN TO   STREET-CROSSFALL:   CURB  GUTTER-GEOMETRIES:  MANNING
     WIDTH  CROSSFALL  IN-  / OUT-/PARK-  HEIGHT  WIDTH  LIP   HIKE  FACTOR
NO.   (FT)     (FT)    SIDE / SIDE/ WAY    (FT)    (FT)  (FT)  (FT)    (n)
===  =====  =========  ================  ======  ===== ====== ===== =======
  1   30.0     20.0    0.018/0.018/0.020   0.67    2.00 0.0313 0.167 0.0150
```

```
  2   20.0     15.0    0.020/0.020/0.020   0.50    1.50 0.0100 0.125 0.0180
  3   11.0      6.0    0.020/0.018/0.020   0.50    1.50 0.0313 0.125 0.0130

  GLOBAL STREET FLOW-DEPTH CONSTRAINTS:
    1. Relative Flow-Depth = -0.10 FEET
       as (Maximum Allowable Street Flow Depth) - (Top-of-Curb)
    2. (Depth)*(Velocity) Constraint =  6.0 (FT*FT/S)
  *SIZE PIPE WITH A FLOW CAPACITY GREATER THAN
   OR EQUAL TO THE UPSTREAM TRIBUTARY PIPE.*

****************************************************************************
  FLOW PROCESS FROM NODE    200.00 TO NODE    201.00 IS CODE =  21
----------------------------------------------------------------------------
  >>>>>RATIONAL METHOD INITIAL SUBAREA ANALYSIS<<<<<
============================================================================
  *USER SPECIFIED(SUBAREA):
  INDUSTRIAL DEVELOPMENT RUNOFF COEFFICIENT = .9500
  S.C.S. CURVE NUMBER (AMC II) =   0
  INITIAL SUBAREA FLOW-LENGTH(FEET) =    85.00
  UPSTREAM ELEVATION(FEET) =    520.00
  DOWNSTREAM ELEVATION(FEET) =    519.50
  ELEVATION DIFFERENCE(FEET) =      0.50
  URBAN SUBAREA OVERLAND TIME OF FLOW(MIN.) =    2.971
  TIME OF CONCENTRATION ASSUMED AS 6-MIN.
   100 YEAR RAINFALL INTENSITY(INCH/HOUR) =  4.210
  SUBAREA RUNOFF(CFS) =      0.40
  TOTAL AREA(ACRES) =      0.10   TOTAL RUNOFF(CFS) =      0.40

****************************************************************************
  FLOW PROCESS FROM NODE    201.00 TO NODE    204.00 IS CODE =  62
----------------------------------------------------------------------------
  >>>>>COMPUTE STREET FLOW TRAVEL TIME THRU SUBAREA<<<<<
  >>>>>(STREET TABLE SECTION #  2 USED)<<<<<
============================================================================
  UPSTREAM ELEVATION(FEET) =  519.50  DOWNSTREAM ELEVATION(FEET) =  486.00
  STREET LENGTH(FEET) =   704.00   CURB HEIGHT(INCHES) =  6.0
  STREET HALFWIDTH(FEET) = 20.00

  DISTANCE FROM CROWN TO CROSSFALL GRADEBREAK(FEET) =  15.00
  INSIDE STREET CROSSFALL(DECIMAL) =  0.020
  OUTSIDE STREET CROSSFALL(DECIMAL)  =  0.020

  SPECIFIED NUMBER OF HALFSTREETS CARRYING RUNOFF =  1
  STREET PARKWAY CROSSFALL(DECIMAL)  =  0.020
  Manning's FRICTION FACTOR for Streetflow Section(curb-to-curb) =   0.0180
  Manning's FRICTION FACTOR for Back-of-Walk Flow Section =   0.0200

    **TRAVEL TIME COMPUTED USING ESTIMATED FLOW(CFS) =       2.27
    STREETFLOW MODEL RESULTS USING ESTIMATED FLOW:
    STREET FLOW DEPTH(FEET) =  0.26
```

```
    HALFSTREET FLOOD WIDTH(FEET) =    7.55
    AVERAGE FLOW VELOCITY(FEET/SEC.) =    3.47
    PRODUCT OF DEPTH&VELOCITY(FT*FT/SEC.) =    0.89
  STREET FLOW TRAVEL TIME(MIN.) =   3.38   Tc(MIN.) =   9.38
   100 YEAR RAINFALL INTENSITY(INCH/HOUR) =  3.567
  *USER SPECIFIED(SUBAREA):
  INDUSTRIAL DEVELOPMENT RUNOFF COEFFICIENT = .8700
  S.C.S. CURVE NUMBER (AMC II) =   0
  SUBAREA AREA(ACRES) =    1.20      SUBAREA RUNOFF(CFS) =    3.72
  TOTAL AREA(ACRES) =      1.30        PEAK FLOW RATE(CFS) =       4.12

  END OF SUBAREA STREET FLOW HYDRAULICS:
  DEPTH(FEET) = 0.30   HALFSTREET FLOOD WIDTH(FEET) =   9.78
  FLOW VELOCITY(FEET/SEC.) =  3.96   DEPTH*VELOCITY(FT*FT/SEC.) =   1.19
  LONGEST FLOWPATH FROM NODE    200.00 TO NODE    204.00 =   789.00 FEET.

****************************************************************************
  FLOW PROCESS FROM NODE    204.00 TO NODE    230.00 IS CODE =  41
----------------------------------------------------------------------------
  >>>>>COMPUTE PIPE-FLOW TRAVEL TIME THRU SUBAREA<<<<<
  >>>>>USING USER-SPECIFIED PIPESIZE (EXISTING ELEMENT)<<<<<
============================================================================
  ELEVATION DATA: UPSTREAM(FEET) =   483.00  DOWNSTREAM(FEET) =   481.00
  FLOW LENGTH(FEET) =   347.00   MANNING'S N =  0.013
  DEPTH OF FLOW IN  18.0 INCH PIPE IS   9.5 INCHES
  PIPE-FLOW VELOCITY(FEET/SEC.) =   4.38
  GIVEN PIPE DIAMETER(INCH) =  18.00    NUMBER OF PIPES =   1
  PIPE-FLOW(CFS) =      4.12
  PIPE TRAVEL TIME(MIN.) =   1.32    Tc(MIN.) =  10.70
  LONGEST FLOWPATH FROM NODE    200.00 TO NODE    230.00 =  1136.00 FEET.

****************************************************************************
  FLOW PROCESS FROM NODE    230.00 TO NODE    230.00 IS CODE =  10
----------------------------------------------------------------------------
  >>>>>MAIN-STREAM MEMORY COPIED ONTO MEMORY BANK # 1 <<<<<
============================================================================

****************************************************************************
  FLOW PROCESS FROM NODE    205.00 TO NODE    206.00 IS CODE =  21
----------------------------------------------------------------------------
  >>>>>RATIONAL METHOD INITIAL SUBAREA ANALYSIS<<<<<
============================================================================
  *USER SPECIFIED(SUBAREA):
  RURAL DEVELOPMENT RUNOFF COEFFICIENT = .4500
  S.C.S. CURVE NUMBER (AMC II) =   0
  INITIAL SUBAREA FLOW-LENGTH(FEET) =    65.00
  UPSTREAM ELEVATION(FEET) =    510.00
  DOWNSTREAM ELEVATION(FEET) =    509.00
  ELEVATION DIFFERENCE(FEET) =      1.00
  URBAN SUBAREA OVERLAND TIME OF FLOW(MIN.) =    8.171
```

```
   100 YEAR RAINFALL INTENSITY(INCH/HOUR) =  3.797
  SUBAREA RUNOFF(CFS) =      0.17
  TOTAL AREA(ACRES) =      0.10   TOTAL RUNOFF(CFS) =      0.17

****************************************************************************
  FLOW PROCESS FROM NODE    206.00 TO NODE    207.00 IS CODE =  51
----------------------------------------------------------------------------
  >>>>>COMPUTE TRAPEZOIDAL CHANNEL FLOW<<<<<
  >>>>>TRAVELTIME THRU SUBAREA (EXISTING ELEMENT)<<<<<
============================================================================
  ELEVATION DATA: UPSTREAM(FEET) =    509.00  DOWNSTREAM(FEET) =    496.00
  CHANNEL LENGTH THRU SUBAREA(FEET) =   123.00   CHANNEL SLOPE =  0.1057
  CHANNEL BASE(FEET) =   10.00   "Z" FACTOR =  12.000
  MANNING'S FACTOR = 0.030   MAXIMUM DEPTH(FEET) =   5.00
   100 YEAR RAINFALL INTENSITY(INCH/HOUR) =  3.521
  *USER SPECIFIED(SUBAREA):
  RURAL DEVELOPMENT RUNOFF COEFFICIENT = .4500
  S.C.S. CURVE NUMBER (AMC II) =   0
  TRAVEL TIME COMPUTED USING ESTIMATED FLOW(CFS) =      0.49
  TRAVEL TIME THRU SUBAREA BASED ON VELOCITY(FEET/SEC.) =   1.41
  AVERAGE FLOW DEPTH(FEET) =   0.03   TRAVEL TIME(MIN.) =   1.46
  Tc(MIN.) =   9.63
  SUBAREA AREA(ACRES) =     0.40       SUBAREA RUNOFF(CFS) =    0.63
  TOTAL AREA(ACRES) =      0.50         PEAK FLOW RATE(CFS) =       0.80

  END OF SUBAREA CHANNEL FLOW HYDRAULICS:
  DEPTH(FEET) =  0.04   FLOW VELOCITY(FEET/SEC.) =   1.87
  LONGEST FLOWPATH FROM NODE    205.00 TO NODE    207.00 =   188.00 FEET.

****************************************************************************
  FLOW PROCESS FROM NODE    207.00 TO NODE    209.00 IS CODE =  61
----------------------------------------------------------------------------
  >>>>>COMPUTE STREET FLOW TRAVEL TIME THRU SUBAREA<<<<<
  >>>>>(STANDARD CURB SECTION USED)<<<<<
============================================================================
  UPSTREAM ELEVATION(FEET) =  496.00  DOWNSTREAM ELEVATION(FEET) =  494.00
  STREET LENGTH(FEET) =   123.00   CURB HEIGHT(INCHES) =  6.0
  STREET HALFWIDTH(FEET) = 11.00

  DISTANCE FROM CROWN TO CROSSFALL GRADEBREAK(FEET) =   6.00
  INSIDE STREET CROSSFALL(DECIMAL) =  0.200
  OUTSIDE STREET CROSSFALL(DECIMAL)  =  0.200

  SPECIFIED NUMBER OF HALFSTREETS CARRYING RUNOFF =  1
  STREET PARKWAY CROSSFALL(DECIMAL)  =  0.020
  Manning's FRICTION FACTOR for Streetflow Section(curb-to-curb) =   0.0180
  Manning's FRICTION FACTOR for Back-of-Walk Flow Section =   0.0200

    **TRAVEL TIME COMPUTED USING ESTIMATED FLOW(CFS) =       0.97
    STREETFLOW MODEL RESULTS USING ESTIMATED FLOW:
```

```
    STREET FLOW DEPTH(FEET) =  0.27
    HALFSTREET FLOOD WIDTH(FEET) =    2.05
    AVERAGE FLOW VELOCITY(FEET/SEC.) =    2.88
    PRODUCT OF DEPTH&VELOCITY(FT*FT/SEC.) =    0.77
  STREET FLOW TRAVEL TIME(MIN.) =   0.71   Tc(MIN.) =  10.34
   100 YEAR RAINFALL INTENSITY(INCH/HOUR) =  3.413
  *USER SPECIFIED(SUBAREA):
  INDUSTRIAL DEVELOPMENT RUNOFF COEFFICIENT = .9500
  S.C.S. CURVE NUMBER (AMC II) =   0
  SUBAREA AREA(ACRES) =    0.10      SUBAREA RUNOFF(CFS) =    0.32
  TOTAL AREA(ACRES) =      0.60        PEAK FLOW RATE(CFS) =       1.13

  END OF SUBAREA STREET FLOW HYDRAULICS:
  DEPTH(FEET) = 0.29   HALFSTREET FLOOD WIDTH(FEET) =   2.15
  FLOW VELOCITY(FEET/SEC.) =  3.00   DEPTH*VELOCITY(FT*FT/SEC.) =   0.86
  LONGEST FLOWPATH FROM NODE    205.00 TO NODE    209.00 =   311.00 FEET.

****************************************************************************
  FLOW PROCESS FROM NODE    209.00 TO NODE    209.00 IS CODE =  81
----------------------------------------------------------------------------
  >>>>>ADDITION OF SUBAREA TO MAINLINE PEAK FLOW<<<<<
============================================================================
   100 YEAR RAINFALL INTENSITY(INCH/HOUR) =  3.413
  *USER SPECIFIED(SUBAREA):
  MULTI-UNITS DEVELOPMENT RUNOFF COEFFICIENT = .8000
  S.C.S. CURVE NUMBER (AMC II) =   0
  SUBAREA AREA(ACRES) =    0.10   SUBAREA RUNOFF(CFS) =    0.27
  TOTAL AREA(ACRES) =      0.70   TOTAL RUNOFF(CFS) =    1.40
  TC(MIN.) =  10.34

****************************************************************************
  FLOW PROCESS FROM NODE    209.00 TO NODE    209.00 IS CODE =  81
----------------------------------------------------------------------------
  >>>>>ADDITION OF SUBAREA TO MAINLINE PEAK FLOW<<<<<
============================================================================
   100 YEAR RAINFALL INTENSITY(INCH/HOUR) =  3.413
  *USER SPECIFIED(SUBAREA):
  MULTI-UNITS DEVELOPMENT RUNOFF COEFFICIENT = .8000
  S.C.S. CURVE NUMBER (AMC II) =   0
  SUBAREA AREA(ACRES) =    0.20   SUBAREA RUNOFF(CFS) =    0.55
  TOTAL AREA(ACRES) =      0.90   TOTAL RUNOFF(CFS) =    1.95
  TC(MIN.) =  10.34

****************************************************************************
  FLOW PROCESS FROM NODE    209.00 TO NODE    210.00 IS CODE =  41
----------------------------------------------------------------------------
  >>>>>COMPUTE PIPE-FLOW TRAVEL TIME THRU SUBAREA<<<<<
  >>>>>USING USER-SPECIFIED PIPESIZE (EXISTING ELEMENT)<<<<<
============================================================================
  ELEVATION DATA: UPSTREAM(FEET) =   491.00  DOWNSTREAM(FEET) =   490.50
```

```
  FLOW LENGTH(FEET) =    67.00   MANNING'S N =  0.013
  DEPTH OF FLOW IN  18.0 INCH PIPE IS   5.8 INCHES
  PIPE-FLOW VELOCITY(FEET/SEC.) =   3.94
  GIVEN PIPE DIAMETER(INCH) =  18.00    NUMBER OF PIPES =   1
  PIPE-FLOW(CFS) =      1.95
  PIPE TRAVEL TIME(MIN.) =   0.28    Tc(MIN.) =  10.62
  LONGEST FLOWPATH FROM NODE    205.00 TO NODE    210.00 =   378.00 FEET.

****************************************************************************
  FLOW PROCESS FROM NODE    210.00 TO NODE    210.00 IS CODE =  81
----------------------------------------------------------------------------
  >>>>>ADDITION OF SUBAREA TO MAINLINE PEAK FLOW<<<<<
============================================================================
   100 YEAR RAINFALL INTENSITY(INCH/HOUR) =  3.381
  *USER SPECIFIED(SUBAREA):
  MULTI-UNITS DEVELOPMENT RUNOFF COEFFICIENT = .8500
  S.C.S. CURVE NUMBER (AMC II) =   0
  SUBAREA AREA(ACRES) =    0.50   SUBAREA RUNOFF(CFS) =    1.44
  TOTAL AREA(ACRES) =      1.40   TOTAL RUNOFF(CFS) =    3.39
  TC(MIN.) =  10.62

****************************************************************************
  FLOW PROCESS FROM NODE    210.00 TO NODE    212.00 IS CODE =  41
----------------------------------------------------------------------------
  >>>>>COMPUTE PIPE-FLOW TRAVEL TIME THRU SUBAREA<<<<<
  >>>>>USING USER-SPECIFIED PIPESIZE (EXISTING ELEMENT)<<<<<
============================================================================
  ELEVATION DATA: UPSTREAM(FEET) =   490.50  DOWNSTREAM(FEET) =   490.00
  FLOW LENGTH(FEET) =   175.00   MANNING'S N =  0.013
  DEPTH OF FLOW IN  18.0 INCH PIPE IS  10.4 INCHES
  PIPE-FLOW VELOCITY(FEET/SEC.) =   3.19
  GIVEN PIPE DIAMETER(INCH) =  18.00    NUMBER OF PIPES =   1
  PIPE-FLOW(CFS) =      3.39
  PIPE TRAVEL TIME(MIN.) =   0.91    Tc(MIN.) =  11.54
  LONGEST FLOWPATH FROM NODE    205.00 TO NODE    212.00 =   553.00 FEET.

****************************************************************************
  FLOW PROCESS FROM NODE    212.00 TO NODE    212.00 IS CODE =  81
----------------------------------------------------------------------------
  >>>>>ADDITION OF SUBAREA TO MAINLINE PEAK FLOW<<<<<
============================================================================
   100 YEAR RAINFALL INTENSITY(INCH/HOUR) =  3.281
  *USER SPECIFIED(SUBAREA):
  MULTI-UNITS DEVELOPMENT RUNOFF COEFFICIENT = .8400
  S.C.S. CURVE NUMBER (AMC II) =   0
  SUBAREA AREA(ACRES) =    0.40   SUBAREA RUNOFF(CFS) =    1.10
  TOTAL AREA(ACRES) =      1.80   TOTAL RUNOFF(CFS) =    4.49
  TC(MIN.) =  11.54

****************************************************************************
```

```
  FLOW PROCESS FROM NODE    212.00 TO NODE    215.00 IS CODE =  41
----------------------------------------------------------------------------
  >>>>>COMPUTE PIPE-FLOW TRAVEL TIME THRU SUBAREA<<<<<
  >>>>>USING USER-SPECIFIED PIPESIZE (EXISTING ELEMENT)<<<<<
============================================================================
  ELEVATION DATA: UPSTREAM(FEET) =   490.00  DOWNSTREAM(FEET) =   489.50
  FLOW LENGTH(FEET) =    23.00   MANNING'S N =  0.013
  DEPTH OF FLOW IN  18.0 INCH PIPE IS   6.8 INCHES
  PIPE-FLOW VELOCITY(FEET/SEC.) =   7.32
  GIVEN PIPE DIAMETER(INCH) =  18.00    NUMBER OF PIPES =   1
  PIPE-FLOW(CFS) =      4.49
  PIPE TRAVEL TIME(MIN.) =   0.05    Tc(MIN.) =  11.59
  LONGEST FLOWPATH FROM NODE    205.00 TO NODE    215.00 =   576.00 FEET.

****************************************************************************
  FLOW PROCESS FROM NODE    215.00 TO NODE    215.00 IS CODE =  81
----------------------------------------------------------------------------
  >>>>>ADDITION OF SUBAREA TO MAINLINE PEAK FLOW<<<<<
============================================================================
   100 YEAR RAINFALL INTENSITY(INCH/HOUR) =  3.275
  *USER SPECIFIED(SUBAREA):
  MULTI-UNITS DEVELOPMENT RUNOFF COEFFICIENT = .8500
  S.C.S. CURVE NUMBER (AMC II) =   0
  SUBAREA AREA(ACRES) =    0.30   SUBAREA RUNOFF(CFS) =    0.84
  TOTAL AREA(ACRES) =      2.10   TOTAL RUNOFF(CFS) =    5.32
  TC(MIN.) =  11.59

****************************************************************************
  FLOW PROCESS FROM NODE    215.00 TO NODE    215.00 IS CODE =  81
----------------------------------------------------------------------------
  >>>>>ADDITION OF SUBAREA TO MAINLINE PEAK FLOW<<<<<
============================================================================
   100 YEAR RAINFALL INTENSITY(INCH/HOUR) =  3.275
  *USER SPECIFIED(SUBAREA):
  INDUSTRIAL DEVELOPMENT RUNOFF COEFFICIENT = .9500
  S.C.S. CURVE NUMBER (AMC II) =   0
  SUBAREA AREA(ACRES) =    0.10   SUBAREA RUNOFF(CFS) =    0.31
  TOTAL AREA(ACRES) =      2.20   TOTAL RUNOFF(CFS) =    5.63
  TC(MIN.) =  11.59

****************************************************************************
  FLOW PROCESS FROM NODE    215.00 TO NODE    217.00 IS CODE =  41
----------------------------------------------------------------------------
  >>>>>COMPUTE PIPE-FLOW TRAVEL TIME THRU SUBAREA<<<<<
  >>>>>USING USER-SPECIFIED PIPESIZE (EXISTING ELEMENT)<<<<<
============================================================================
  ELEVATION DATA: UPSTREAM(FEET) =   489.50  DOWNSTREAM(FEET) =   488.00
  FLOW LENGTH(FEET) =   159.00   MANNING'S N =  0.013
  DEPTH OF FLOW IN  24.0 INCH PIPE IS   8.5 INCHES
  PIPE-FLOW VELOCITY(FEET/SEC.) =   5.64
```

```
  GIVEN PIPE DIAMETER(INCH) =  24.00    NUMBER OF PIPES =   1
  PIPE-FLOW(CFS) =      5.63
  PIPE TRAVEL TIME(MIN.) =   0.47    Tc(MIN.) =  12.06
  LONGEST FLOWPATH FROM NODE    205.00 TO NODE    217.00 =   735.00 FEET.

****************************************************************************
  FLOW PROCESS FROM NODE    217.00 TO NODE    217.00 IS CODE =  81
----------------------------------------------------------------------------
  >>>>>ADDITION OF SUBAREA TO MAINLINE PEAK FLOW<<<<<
============================================================================
   100 YEAR RAINFALL INTENSITY(INCH/HOUR) =  3.224
  *USER SPECIFIED(SUBAREA):
  MULTI-UNITS DEVELOPMENT RUNOFF COEFFICIENT = .8600
  S.C.S. CURVE NUMBER (AMC II) =   0
  SUBAREA AREA(ACRES) =    0.80   SUBAREA RUNOFF(CFS) =    2.22
  TOTAL AREA(ACRES) =      3.00   TOTAL RUNOFF(CFS) =    7.85
  TC(MIN.) =  12.06

****************************************************************************
  FLOW PROCESS FROM NODE    217.00 TO NODE    228.00 IS CODE =  41
----------------------------------------------------------------------------
  >>>>>COMPUTE PIPE-FLOW TRAVEL TIME THRU SUBAREA<<<<<
  >>>>>USING USER-SPECIFIED PIPESIZE (EXISTING ELEMENT)<<<<<
============================================================================
  ELEVATION DATA: UPSTREAM(FEET) =   488.00  DOWNSTREAM(FEET) =   487.00
  FLOW LENGTH(FEET) =    40.00   MANNING'S N =  0.013
  DEPTH OF FLOW IN  24.0 INCH PIPE IS   7.8 INCHES
  PIPE-FLOW VELOCITY(FEET/SEC.) =   8.80
  GIVEN PIPE DIAMETER(INCH) =  24.00    NUMBER OF PIPES =   1
  PIPE-FLOW(CFS) =      7.85
  PIPE TRAVEL TIME(MIN.) =   0.08    Tc(MIN.) =  12.13
  LONGEST FLOWPATH FROM NODE    205.00 TO NODE    228.00 =   775.00 FEET.

****************************************************************************
  FLOW PROCESS FROM NODE    228.00 TO NODE    228.00 IS CODE =   1
----------------------------------------------------------------------------
  >>>>>DESIGNATE INDEPENDENT STREAM FOR CONFLUENCE<<<<<
============================================================================
  TOTAL NUMBER OF STREAMS =  2
  CONFLUENCE VALUES USED FOR INDEPENDENT STREAM  1 ARE:
  TIME OF CONCENTRATION(MIN.) =  12.13
  RAINFALL INTENSITY(INCH/HR) =   3.22
  TOTAL STREAM AREA(ACRES) =     3.00
  PEAK FLOW RATE(CFS) AT CONFLUENCE =      7.85

****************************************************************************
  FLOW PROCESS FROM NODE    220.00 TO NODE    222.00 IS CODE =  21
----------------------------------------------------------------------------
  >>>>>RATIONAL METHOD INITIAL SUBAREA ANALYSIS<<<<<
============================================================================
```

```
  *USER SPECIFIED(SUBAREA):
  MULTI-UNITS DEVELOPMENT RUNOFF COEFFICIENT = .8000
  S.C.S. CURVE NUMBER (AMC II) =   0
  INITIAL SUBAREA FLOW-LENGTH(FEET) =    84.00
  UPSTREAM ELEVATION(FEET) =    498.00
  DOWNSTREAM ELEVATION(FEET) =    497.00
  ELEVATION DIFFERENCE(FEET) =      1.00
  URBAN SUBAREA OVERLAND TIME OF FLOW(MIN.) =    4.670
  TIME OF CONCENTRATION ASSUMED AS 6-MIN.
   100 YEAR RAINFALL INTENSITY(INCH/HOUR) =  4.210
  SUBAREA RUNOFF(CFS) =      0.34
  TOTAL AREA(ACRES) =      0.10   TOTAL RUNOFF(CFS) =      0.34

****************************************************************************
  FLOW PROCESS FROM NODE    222.00 TO NODE    223.00 IS CODE =  62
----------------------------------------------------------------------------
  >>>>>COMPUTE STREET FLOW TRAVEL TIME THRU SUBAREA<<<<<
  >>>>>(STREET TABLE SECTION #  3 USED)<<<<<
============================================================================
  UPSTREAM ELEVATION(FEET) =  497.00  DOWNSTREAM ELEVATION(FEET) =  496.00
  STREET LENGTH(FEET) =    99.00   CURB HEIGHT(INCHES) =  6.0
  STREET HALFWIDTH(FEET) = 11.00

  DISTANCE FROM CROWN TO CROSSFALL GRADEBREAK(FEET) =   6.00
  INSIDE STREET CROSSFALL(DECIMAL) =  0.020
  OUTSIDE STREET CROSSFALL(DECIMAL)  =  0.018

  SPECIFIED NUMBER OF HALFSTREETS CARRYING RUNOFF =  1
  STREET PARKWAY CROSSFALL(DECIMAL)  =  0.020
  Manning's FRICTION FACTOR for Streetflow Section(curb-to-curb) =   0.0130
  Manning's FRICTION FACTOR for Back-of-Walk Flow Section =   0.0130

    **TRAVEL TIME COMPUTED USING ESTIMATED FLOW(CFS) =       0.51
    STREETFLOW MODEL RESULTS USING ESTIMATED FLOW:
    STREET FLOW DEPTH(FEET) =  0.21
    HALFSTREET FLOOD WIDTH(FEET) =    4.29
    AVERAGE FLOW VELOCITY(FEET/SEC.) =    1.80
    PRODUCT OF DEPTH&VELOCITY(FT*FT/SEC.) =    0.37
  STREET FLOW TRAVEL TIME(MIN.) =   0.92   Tc(MIN.) =   6.92
   100 YEAR RAINFALL INTENSITY(INCH/HOUR) =  4.036
  *USER SPECIFIED(SUBAREA):
  INDUSTRIAL DEVELOPMENT RUNOFF COEFFICIENT = .8800
  S.C.S. CURVE NUMBER (AMC II) =   0
  SUBAREA AREA(ACRES) =    0.10      SUBAREA RUNOFF(CFS) =    0.36
  TOTAL AREA(ACRES) =      0.20        PEAK FLOW RATE(CFS) =       0.69

  END OF SUBAREA STREET FLOW HYDRAULICS:
  DEPTH(FEET) = 0.22   HALFSTREET FLOOD WIDTH(FEET) =   5.23
  FLOW VELOCITY(FEET/SEC.) =  1.87   DEPTH*VELOCITY(FT*FT/SEC.) =   0.42
  LONGEST FLOWPATH FROM NODE    220.00 TO NODE    223.00 =   183.00 FEET.
```

```
****************************************************************************
  FLOW PROCESS FROM NODE    223.00 TO NODE    223.00 IS CODE =  81
----------------------------------------------------------------------------
  >>>>>ADDITION OF SUBAREA TO MAINLINE PEAK FLOW<<<<<
============================================================================
   100 YEAR RAINFALL INTENSITY(INCH/HOUR) =  4.036
  *USER SPECIFIED(SUBAREA):
  MULTI-UNITS DEVELOPMENT RUNOFF COEFFICIENT = .8000
  S.C.S. CURVE NUMBER (AMC II) =   0
  SUBAREA AREA(ACRES) =    0.10   SUBAREA RUNOFF(CFS) =    0.32
  TOTAL AREA(ACRES) =      0.30   TOTAL RUNOFF(CFS) =    1.01
  TC(MIN.) =   6.92

****************************************************************************
  FLOW PROCESS FROM NODE    223.00 TO NODE    225.00 IS CODE =  41
----------------------------------------------------------------------------
  >>>>>COMPUTE PIPE-FLOW TRAVEL TIME THRU SUBAREA<<<<<
  >>>>>USING USER-SPECIFIED PIPESIZE (EXISTING ELEMENT)<<<<<
============================================================================
  ELEVATION DATA: UPSTREAM(FEET) =   492.00  DOWNSTREAM(FEET) =   490.00
  FLOW LENGTH(FEET) =   205.00   MANNING'S N =  0.013
  DEPTH OF FLOW IN  18.0 INCH PIPE IS   3.9 INCHES
  PIPE-FLOW VELOCITY(FEET/SEC.) =   3.60
  GIVEN PIPE DIAMETER(INCH) =  18.00    NUMBER OF PIPES =   1
  PIPE-FLOW(CFS) =      1.01
  PIPE TRAVEL TIME(MIN.) =   0.95    Tc(MIN.) =   7.87
  LONGEST FLOWPATH FROM NODE    220.00 TO NODE    225.00 =   388.00 FEET.

****************************************************************************
  FLOW PROCESS FROM NODE    225.00 TO NODE    225.00 IS CODE =  81
----------------------------------------------------------------------------
  >>>>>ADDITION OF SUBAREA TO MAINLINE PEAK FLOW<<<<<
============================================================================
   100 YEAR RAINFALL INTENSITY(INCH/HOUR) =  3.855
  *USER SPECIFIED(SUBAREA):
  MULTI-UNITS DEVELOPMENT RUNOFF COEFFICIENT = .8400
  S.C.S. CURVE NUMBER (AMC II) =   0
  SUBAREA AREA(ACRES) =    0.40   SUBAREA RUNOFF(CFS) =    1.30
  TOTAL AREA(ACRES) =      0.70   TOTAL RUNOFF(CFS) =    2.31
  TC(MIN.) =   7.87

****************************************************************************
  FLOW PROCESS FROM NODE    225.00 TO NODE    227.00 IS CODE =  41
----------------------------------------------------------------------------
  >>>>>COMPUTE PIPE-FLOW TRAVEL TIME THRU SUBAREA<<<<<
  >>>>>USING USER-SPECIFIED PIPESIZE (EXISTING ELEMENT)<<<<<
============================================================================
  ELEVATION DATA: UPSTREAM(FEET) =   490.00  DOWNSTREAM(FEET) =   488.00
  FLOW LENGTH(FEET) =   200.00   MANNING'S N =  0.013
```

```
  DEPTH OF FLOW IN  18.0 INCH PIPE IS   5.9 INCHES
  PIPE-FLOW VELOCITY(FEET/SEC.) =   4.59
  GIVEN PIPE DIAMETER(INCH) =  18.00    NUMBER OF PIPES =   1
  PIPE-FLOW(CFS) =      2.31
  PIPE TRAVEL TIME(MIN.) =   0.73    Tc(MIN.) =   8.59
  LONGEST FLOWPATH FROM NODE    220.00 TO NODE    227.00 =   588.00 FEET.

****************************************************************************
  FLOW PROCESS FROM NODE    227.00 TO NODE    227.00 IS CODE =  81
----------------------------------------------------------------------------
  >>>>>ADDITION OF SUBAREA TO MAINLINE PEAK FLOW<<<<<
============================================================================
   100 YEAR RAINFALL INTENSITY(INCH/HOUR) =  3.717
  *USER SPECIFIED(SUBAREA):
  MULTI-UNITS DEVELOPMENT RUNOFF COEFFICIENT = .8500
  S.C.S. CURVE NUMBER (AMC II) =   0
  SUBAREA AREA(ACRES) =    0.60   SUBAREA RUNOFF(CFS) =    1.90
  TOTAL AREA(ACRES) =      1.30   TOTAL RUNOFF(CFS) =    4.21
  TC(MIN.) =   8.59

****************************************************************************
  FLOW PROCESS FROM NODE    227.00 TO NODE    228.00 IS CODE =  41
----------------------------------------------------------------------------
  >>>>>COMPUTE PIPE-FLOW TRAVEL TIME THRU SUBAREA<<<<<
  >>>>>USING USER-SPECIFIED PIPESIZE (EXISTING ELEMENT)<<<<<
============================================================================
  ELEVATION DATA: UPSTREAM(FEET) =   488.00  DOWNSTREAM(FEET) =   487.00
  FLOW LENGTH(FEET) =   170.00   MANNING'S N =  0.013
  DEPTH OF FLOW IN  18.0 INCH PIPE IS   9.5 INCHES
  PIPE-FLOW VELOCITY(FEET/SEC.) =   4.44
  GIVEN PIPE DIAMETER(INCH) =  18.00    NUMBER OF PIPES =   1
  PIPE-FLOW(CFS) =      4.21
  PIPE TRAVEL TIME(MIN.) =   0.64    Tc(MIN.) =   9.23
  LONGEST FLOWPATH FROM NODE    220.00 TO NODE    228.00 =   758.00 FEET.

****************************************************************************
  FLOW PROCESS FROM NODE    228.00 TO NODE    228.00 IS CODE =   1
----------------------------------------------------------------------------
  >>>>>DESIGNATE INDEPENDENT STREAM FOR CONFLUENCE<<<<<
  >>>>>AND COMPUTE VARIOUS CONFLUENCED STREAM VALUES<<<<<
============================================================================
  TOTAL NUMBER OF STREAMS =  2
  CONFLUENCE VALUES USED FOR INDEPENDENT STREAM  2 ARE:
  TIME OF CONCENTRATION(MIN.) =   9.23
  RAINFALL INTENSITY(INCH/HR) =   3.60
  TOTAL STREAM AREA(ACRES) =     1.30
  PEAK FLOW RATE(CFS) AT CONFLUENCE =      4.21

  ** CONFLUENCE DATA **
  STREAM     RUNOFF      Tc      INTENSITY      AREA
```

```
  NUMBER      (CFS)    (MIN.)   (INCH/HOUR)    (ACRE)
     1         7.85    12.13        3.215          3.00
     2         4.21     9.23        3.596          1.30

  RAINFALL INTENSITY AND TIME OF CONCENTRATION RATIO
  CONFLUENCE FORMULA USED FOR  2 STREAMS.

  ** PEAK FLOW RATE TABLE **
  STREAM     RUNOFF      Tc      INTENSITY
  NUMBER      (CFS)    (MIN.)   (INCH/HOUR)
     1       11.23     9.23       3.596
     2       11.61    12.13       3.215

  COMPUTED CONFLUENCE ESTIMATES ARE AS FOLLOWS:
  PEAK FLOW RATE(CFS) =     11.61   Tc(MIN.) =   12.13
  TOTAL AREA(ACRES) =      4.30
  LONGEST FLOWPATH FROM NODE    205.00 TO NODE    228.00 =   775.00 FEET.

****************************************************************************
  FLOW PROCESS FROM NODE    228.00 TO NODE    229.00 IS CODE =  41
----------------------------------------------------------------------------
  >>>>>COMPUTE PIPE-FLOW TRAVEL TIME THRU SUBAREA<<<<<
  >>>>>USING USER-SPECIFIED PIPESIZE (EXISTING ELEMENT)<<<<<
============================================================================
  ELEVATION DATA: UPSTREAM(FEET) =   487.00  DOWNSTREAM(FEET) =   485.00
  FLOW LENGTH(FEET) =    63.00   MANNING'S N =  0.013
  DEPTH OF FLOW IN  24.0 INCH PIPE IS   9.1 INCHES
  PIPE-FLOW VELOCITY(FEET/SEC.) =  10.69
  GIVEN PIPE DIAMETER(INCH) =  24.00    NUMBER OF PIPES =   1
  PIPE-FLOW(CFS) =     11.61
  PIPE TRAVEL TIME(MIN.) =   0.10    Tc(MIN.) =  12.23
  LONGEST FLOWPATH FROM NODE    205.00 TO NODE    229.00 =   838.00 FEET.

****************************************************************************
  FLOW PROCESS FROM NODE    229.00 TO NODE    229.00 IS CODE =  81
----------------------------------------------------------------------------
  >>>>>ADDITION OF SUBAREA TO MAINLINE PEAK FLOW<<<<<
============================================================================
   100 YEAR RAINFALL INTENSITY(INCH/HOUR) =  3.204
  *USER SPECIFIED(SUBAREA):
  INDUSTRIAL DEVELOPMENT RUNOFF COEFFICIENT = .9500
  S.C.S. CURVE NUMBER (AMC II) =   0
  SUBAREA AREA(ACRES) =    0.10   SUBAREA RUNOFF(CFS) =    0.30
  TOTAL AREA(ACRES) =      4.40   TOTAL RUNOFF(CFS) =   11.92
  TC(MIN.) =  12.23

****************************************************************************
  FLOW PROCESS FROM NODE    229.00 TO NODE    229.00 IS CODE =  81
----------------------------------------------------------------------------
  >>>>>ADDITION OF SUBAREA TO MAINLINE PEAK FLOW<<<<<
```

```
============================================================================
   100 YEAR RAINFALL INTENSITY(INCH/HOUR) =  3.204
  *USER SPECIFIED(SUBAREA):
  INDUSTRIAL DEVELOPMENT RUNOFF COEFFICIENT = .9500
  S.C.S. CURVE NUMBER (AMC II) =   0
  SUBAREA AREA(ACRES) =    0.40   SUBAREA RUNOFF(CFS) =    1.22
  TOTAL AREA(ACRES) =      4.80   TOTAL RUNOFF(CFS) =   13.13
  TC(MIN.) =  12.23

****************************************************************************
  FLOW PROCESS FROM NODE    229.00 TO NODE    230.00 IS CODE =  41
----------------------------------------------------------------------------
  >>>>>COMPUTE PIPE-FLOW TRAVEL TIME THRU SUBAREA<<<<<
  >>>>>USING USER-SPECIFIED PIPESIZE (EXISTING ELEMENT)<<<<<
============================================================================
  ELEVATION DATA: UPSTREAM(FEET) =   485.00  DOWNSTREAM(FEET) =   481.00
  FLOW LENGTH(FEET) =    83.00   MANNING'S N =  0.013
  DEPTH OF FLOW IN  24.0 INCH PIPE IS   8.7 INCHES
  PIPE-FLOW VELOCITY(FEET/SEC.) =  12.87
  GIVEN PIPE DIAMETER(INCH) =  24.00    NUMBER OF PIPES =   1
  PIPE-FLOW(CFS) =     13.13
  PIPE TRAVEL TIME(MIN.) =   0.11    Tc(MIN.) =  12.34
  LONGEST FLOWPATH FROM NODE    205.00 TO NODE    230.00 =   921.00 FEET.

****************************************************************************
  FLOW PROCESS FROM NODE    230.00 TO NODE    230.00 IS CODE =  11
----------------------------------------------------------------------------
  >>>>>CONFLUENCE MEMORY BANK # 1 WITH THE MAIN-STREAM MEMORY<<<<<
============================================================================

  ** MAIN STREAM CONFLUENCE DATA **
  STREAM     RUNOFF     Tc      INTENSITY     AREA
  NUMBER      (CFS)   (MIN.)   (INCH/HOUR)   (ACRE)
      1       13.13    12.34       3.193        4.80
  LONGEST FLOWPATH FROM NODE    205.00 TO NODE    230.00 =   921.00 FEET.

  ** MEMORY BANK #  1 CONFLUENCE DATA **
  STREAM     RUNOFF     Tc      INTENSITY     AREA
  NUMBER      (CFS)   (MIN.)   (INCH/HOUR)   (ACRE)
      1        4.12    10.70       3.373        1.30
  LONGEST FLOWPATH FROM NODE    200.00 TO NODE    230.00 =  1136.00 FEET.

  ** PEAK FLOW RATE TABLE **
  STREAM    RUNOFF       Tc      INTENSITY
  NUMBER     (CFS)     (MIN.)   (INCH/HOUR)
      1      16.56      10.70        3.373
      2      17.04      12.34        3.193

  COMPUTED CONFLUENCE ESTIMATES ARE AS FOLLOWS:
  PEAK FLOW RATE(CFS) =     17.04   Tc(MIN.) =   12.34
```

```
  TOTAL AREA(ACRES) =      6.10

****************************************************************************
  FLOW PROCESS FROM NODE    230.00 TO NODE    230.00 IS CODE =  12
----------------------------------------------------------------------------
  >>>>>CLEAR MEMORY BANK # 1 <<<<<
============================================================================

****************************************************************************
  FLOW PROCESS FROM NODE    230.00 TO NODE    235.00 IS CODE =  41
----------------------------------------------------------------------------
  >>>>>COMPUTE PIPE-FLOW TRAVEL TIME THRU SUBAREA<<<<<
  >>>>>USING USER-SPECIFIED PIPESIZE (EXISTING ELEMENT)<<<<<
============================================================================
  ELEVATION DATA: UPSTREAM(FEET) =   481.00  DOWNSTREAM(FEET) =   478.50
  FLOW LENGTH(FEET) =   480.00   MANNING'S N =  0.013
  ASSUME FULL-FLOWING PIPELINE
  PIPE-FLOW VELOCITY(FEET/SEC.) =   5.42
  PIPE FLOW VELOCITY = (TOTAL FLOW)/(PIPE CROSS SECTION AREA)
  GIVEN PIPE DIAMETER(INCH) =  24.00    NUMBER OF PIPES =   1
  PIPE-FLOW(CFS) =     17.04
  PIPE TRAVEL TIME(MIN.) =   1.48    Tc(MIN.) =  13.82
  LONGEST FLOWPATH FROM NODE    200.00 TO NODE    235.00 =  1616.00 FEET.

****************************************************************************
  FLOW PROCESS FROM NODE    235.00 TO NODE    235.00 IS CODE =  81
----------------------------------------------------------------------------
  >>>>>ADDITION OF SUBAREA TO MAINLINE PEAK FLOW<<<<<
============================================================================
   100 YEAR RAINFALL INTENSITY(INCH/HOUR) =  3.030
  *USER SPECIFIED(SUBAREA):
  INDUSTRIAL DEVELOPMENT RUNOFF COEFFICIENT = .9500
  S.C.S. CURVE NUMBER (AMC II) =   0
  SUBAREA AREA(ACRES) =    0.60   SUBAREA RUNOFF(CFS) =    1.73
  TOTAL AREA(ACRES) =      6.70   TOTAL RUNOFF(CFS) =   18.77
  TC(MIN.) =  13.82

****************************************************************************
  FLOW PROCESS FROM NODE    235.00 TO NODE    235.00 IS CODE =  81
----------------------------------------------------------------------------
  >>>>>ADDITION OF SUBAREA TO MAINLINE PEAK FLOW<<<<<
============================================================================
   100 YEAR RAINFALL INTENSITY(INCH/HOUR) =  3.030
  *USER SPECIFIED(SUBAREA):
  INDUSTRIAL DEVELOPMENT RUNOFF COEFFICIENT = .9500
  S.C.S. CURVE NUMBER (AMC II) =   0
  SUBAREA AREA(ACRES) =    0.90   SUBAREA RUNOFF(CFS) =    2.59
  TOTAL AREA(ACRES) =      7.60   TOTAL RUNOFF(CFS) =   21.36
  TC(MIN.) =  13.82
```

```
****************************************************************************
  FLOW PROCESS FROM NODE    235.00 TO NODE    268.00 IS CODE =  41
----------------------------------------------------------------------------
  >>>>>COMPUTE PIPE-FLOW TRAVEL TIME THRU SUBAREA<<<<<
  >>>>>USING USER-SPECIFIED PIPESIZE (EXISTING ELEMENT)<<<<<
============================================================================
  ELEVATION DATA: UPSTREAM(FEET) =   478.50  DOWNSTREAM(FEET) =   478.00
  FLOW LENGTH(FEET) =    35.00   MANNING'S N =  0.013
  DEPTH OF FLOW IN  24.0 INCH PIPE IS  16.7 INCHES
  PIPE-FLOW VELOCITY(FEET/SEC.) =   9.14
  GIVEN PIPE DIAMETER(INCH) =  24.00    NUMBER OF PIPES =   1
  PIPE-FLOW(CFS) =     21.36
  PIPE TRAVEL TIME(MIN.) =   0.06    Tc(MIN.) =  13.88
  LONGEST FLOWPATH FROM NODE    200.00 TO NODE    268.00 =  1651.00 FEET.

****************************************************************************
  FLOW PROCESS FROM NODE    268.00 TO NODE    268.00 IS CODE =  10
----------------------------------------------------------------------------
  >>>>>MAIN-STREAM MEMORY COPIED ONTO MEMORY BANK # 1 <<<<<
============================================================================

****************************************************************************
  FLOW PROCESS FROM NODE    240.00 TO NODE    241.00 IS CODE =  21
----------------------------------------------------------------------------
  >>>>>RATIONAL METHOD INITIAL SUBAREA ANALYSIS<<<<<
============================================================================
  *USER SPECIFIED(SUBAREA):
  INDUSTRIAL DEVELOPMENT RUNOFF COEFFICIENT = .7000
  S.C.S. CURVE NUMBER (AMC II) =   0
  INITIAL SUBAREA FLOW-LENGTH(FEET) =    73.00
  UPSTREAM ELEVATION(FEET) =    494.00
  DOWNSTREAM ELEVATION(FEET) =    493.00
  ELEVATION DIFFERENCE(FEET) =      1.00
  URBAN SUBAREA OVERLAND TIME OF FLOW(MIN.) =    5.539
  TIME OF CONCENTRATION ASSUMED AS 6-MIN.
   100 YEAR RAINFALL INTENSITY(INCH/HOUR) =  4.210
  SUBAREA RUNOFF(CFS) =      0.29
  TOTAL AREA(ACRES) =      0.10   TOTAL RUNOFF(CFS) =      0.29

****************************************************************************
  FLOW PROCESS FROM NODE    241.00 TO NODE    242.00 IS CODE =  51
----------------------------------------------------------------------------
  >>>>>COMPUTE TRAPEZOIDAL CHANNEL FLOW<<<<<
  >>>>>TRAVELTIME THRU SUBAREA (EXISTING ELEMENT)<<<<<
============================================================================
  ELEVATION DATA: UPSTREAM(FEET) =    494.00  DOWNSTREAM(FEET) =    490.00
  CHANNEL LENGTH THRU SUBAREA(FEET) =    90.00   CHANNEL SLOPE =  0.0444
  CHANNEL BASE(FEET) =   10.00   "Z" FACTOR =  12.000
  MANNING'S FACTOR = 0.030   MAXIMUM DEPTH(FEET) =   5.00
   100 YEAR RAINFALL INTENSITY(INCH/HOUR) =  3.968
```

```
  *USER SPECIFIED(SUBAREA):
  RURAL DEVELOPMENT RUNOFF COEFFICIENT = .7000
  S.C.S. CURVE NUMBER (AMC II) =   0
  TRAVEL TIME COMPUTED USING ESTIMATED FLOW(CFS) =      0.43
  TRAVEL TIME THRU SUBAREA BASED ON VELOCITY(FEET/SEC.) =   1.18
  AVERAGE FLOW DEPTH(FEET) =   0.04   TRAVEL TIME(MIN.) =   1.27
  Tc(MIN.) =   7.27
  SUBAREA AREA(ACRES) =     0.10       SUBAREA RUNOFF(CFS) =    0.28
  TOTAL AREA(ACRES) =      0.20         PEAK FLOW RATE(CFS) =       0.57

  END OF SUBAREA CHANNEL FLOW HYDRAULICS:
  DEPTH(FEET) =  0.04   FLOW VELOCITY(FEET/SEC.) =   1.27
  LONGEST FLOWPATH FROM NODE    240.00 TO NODE    242.00 =   163.00 FEET.

****************************************************************************
  FLOW PROCESS FROM NODE    242.00 TO NODE    247.00 IS CODE =  62
----------------------------------------------------------------------------
  >>>>>COMPUTE STREET FLOW TRAVEL TIME THRU SUBAREA<<<<<
  >>>>>(STREET TABLE SECTION #  2 USED)<<<<<
============================================================================
  UPSTREAM ELEVATION(FEET) =  493.00  DOWNSTREAM ELEVATION(FEET) =  492.00
  STREET LENGTH(FEET) =    84.00   CURB HEIGHT(INCHES) =  6.0
  STREET HALFWIDTH(FEET) = 20.00

  DISTANCE FROM CROWN TO CROSSFALL GRADEBREAK(FEET) =  15.00
  INSIDE STREET CROSSFALL(DECIMAL) =  0.020
  OUTSIDE STREET CROSSFALL(DECIMAL)  =  0.020

  SPECIFIED NUMBER OF HALFSTREETS CARRYING RUNOFF =  1
  STREET PARKWAY CROSSFALL(DECIMAL)  =  0.020
  Manning's FRICTION FACTOR for Streetflow Section(curb-to-curb) =   0.0180
  Manning's FRICTION FACTOR for Back-of-Walk Flow Section =   0.0200

    **TRAVEL TIME COMPUTED USING ESTIMATED FLOW(CFS) =       0.74
    STREETFLOW MODEL RESULTS USING ESTIMATED FLOW:
    STREET FLOW DEPTH(FEET) =  0.23
    HALFSTREET FLOOD WIDTH(FEET) =    6.20
    AVERAGE FLOW VELOCITY(FEET/SEC.) =    1.58
    PRODUCT OF DEPTH&VELOCITY(FT*FT/SEC.) =    0.36
  STREET FLOW TRAVEL TIME(MIN.) =   0.89   Tc(MIN.) =   8.16
   100 YEAR RAINFALL INTENSITY(INCH/HOUR) =  3.800
  *USER SPECIFIED(SUBAREA):
  MULTI-UNITS DEVELOPMENT RUNOFF COEFFICIENT = .9000
  S.C.S. CURVE NUMBER (AMC II) =   0
  SUBAREA AREA(ACRES) =    0.10      SUBAREA RUNOFF(CFS) =    0.34
  TOTAL AREA(ACRES) =      0.30        PEAK FLOW RATE(CFS) =       0.91

  END OF SUBAREA STREET FLOW HYDRAULICS:
  DEPTH(FEET) = 0.24   HALFSTREET FLOOD WIDTH(FEET) =   6.85
  FLOW VELOCITY(FEET/SEC.) =  1.65   DEPTH*VELOCITY(FT*FT/SEC.) =   0.40
```

```
  LONGEST FLOWPATH FROM NODE    240.00 TO NODE    247.00 =   247.00 FEET.

****************************************************************************
  FLOW PROCESS FROM NODE    247.00 TO NODE    247.00 IS CODE =   1
----------------------------------------------------------------------------
  >>>>>DESIGNATE INDEPENDENT STREAM FOR CONFLUENCE<<<<<
============================================================================
  TOTAL NUMBER OF STREAMS =  2
  CONFLUENCE VALUES USED FOR INDEPENDENT STREAM  1 ARE:
  TIME OF CONCENTRATION(MIN.) =   8.16
  RAINFALL INTENSITY(INCH/HR) =   3.80
  TOTAL STREAM AREA(ACRES) =     0.30
  PEAK FLOW RATE(CFS) AT CONFLUENCE =      0.91

****************************************************************************
  FLOW PROCESS FROM NODE    243.00 TO NODE    245.00 IS CODE =  21
----------------------------------------------------------------------------
  >>>>>RATIONAL METHOD INITIAL SUBAREA ANALYSIS<<<<<
============================================================================
  *USER SPECIFIED(SUBAREA):
  MULTI-UNITS DEVELOPMENT RUNOFF COEFFICIENT = .8000
  S.C.S. CURVE NUMBER (AMC II) =   0
  INITIAL SUBAREA FLOW-LENGTH(FEET) =    75.00
  UPSTREAM ELEVATION(FEET) =    492.00
  DOWNSTREAM ELEVATION(FEET) =    491.00
  ELEVATION DIFFERENCE(FEET) =      1.00
  URBAN SUBAREA OVERLAND TIME OF FLOW(MIN.) =    4.249
  TIME OF CONCENTRATION ASSUMED AS 6-MIN.
   100 YEAR RAINFALL INTENSITY(INCH/HOUR) =  4.210
  SUBAREA RUNOFF(CFS) =      0.34
  TOTAL AREA(ACRES) =      0.10   TOTAL RUNOFF(CFS) =      0.34

****************************************************************************
  FLOW PROCESS FROM NODE    245.00 TO NODE    246.00 IS CODE =  62
----------------------------------------------------------------------------
  >>>>>COMPUTE STREET FLOW TRAVEL TIME THRU SUBAREA<<<<<
  >>>>>(STREET TABLE SECTION #  3 USED)<<<<<
============================================================================
  UPSTREAM ELEVATION(FEET) =  491.00  DOWNSTREAM ELEVATION(FEET) =  490.00
  STREET LENGTH(FEET) =   118.00   CURB HEIGHT(INCHES) =  6.0
  STREET HALFWIDTH(FEET) = 11.00

  DISTANCE FROM CROWN TO CROSSFALL GRADEBREAK(FEET) =   6.00
  INSIDE STREET CROSSFALL(DECIMAL) =  0.020
  OUTSIDE STREET CROSSFALL(DECIMAL)  =  0.018

  SPECIFIED NUMBER OF HALFSTREETS CARRYING RUNOFF =  1
  STREET PARKWAY CROSSFALL(DECIMAL)  =  0.020
  Manning's FRICTION FACTOR for Streetflow Section(curb-to-curb) =   0.0130
  Manning's FRICTION FACTOR for Back-of-Walk Flow Section =   0.0130
```

```
    **TRAVEL TIME COMPUTED USING ESTIMATED FLOW(CFS) =       0.53
    STREETFLOW MODEL RESULTS USING ESTIMATED FLOW:
    STREET FLOW DEPTH(FEET) =  0.21
    HALFSTREET FLOOD WIDTH(FEET) =    4.62
    AVERAGE FLOW VELOCITY(FEET/SEC.) =    1.69
    PRODUCT OF DEPTH&VELOCITY(FT*FT/SEC.) =    0.36
  STREET FLOW TRAVEL TIME(MIN.) =   1.17   Tc(MIN.) =   7.17
   100 YEAR RAINFALL INTENSITY(INCH/HOUR) =  3.988
  *USER SPECIFIED(SUBAREA):
  INDUSTRIAL DEVELOPMENT RUNOFF COEFFICIENT = .9500
  S.C.S. CURVE NUMBER (AMC II) =   0
  SUBAREA AREA(ACRES) =    0.10      SUBAREA RUNOFF(CFS) =    0.38
  TOTAL AREA(ACRES) =      0.20        PEAK FLOW RATE(CFS) =       0.72

  END OF SUBAREA STREET FLOW HYDRAULICS:
  DEPTH(FEET) = 0.23   HALFSTREET FLOOD WIDTH(FEET) =   5.52
  FLOW VELOCITY(FEET/SEC.) =  1.79   DEPTH*VELOCITY(FT*FT/SEC.) =   0.41
  LONGEST FLOWPATH FROM NODE    243.00 TO NODE    246.00 =   193.00 FEET.

****************************************************************************
  FLOW PROCESS FROM NODE    246.00 TO NODE    246.00 IS CODE =  81
----------------------------------------------------------------------------
  >>>>>ADDITION OF SUBAREA TO MAINLINE PEAK FLOW<<<<<
============================================================================
   100 YEAR RAINFALL INTENSITY(INCH/HOUR) =  3.988
  *USER SPECIFIED(SUBAREA):
  MULTI-UNITS DEVELOPMENT RUNOFF COEFFICIENT = .8300
  S.C.S. CURVE NUMBER (AMC II) =   0
  SUBAREA AREA(ACRES) =    0.50   SUBAREA RUNOFF(CFS) =    1.66
  TOTAL AREA(ACRES) =      0.70   TOTAL RUNOFF(CFS) =    2.37
  TC(MIN.) =   7.17

****************************************************************************
  FLOW PROCESS FROM NODE    246.00 TO NODE    247.00 IS CODE =  41
----------------------------------------------------------------------------
  >>>>>COMPUTE PIPE-FLOW TRAVEL TIME THRU SUBAREA<<<<<
  >>>>>USING USER-SPECIFIED PIPESIZE (EXISTING ELEMENT)<<<<<
============================================================================
  ELEVATION DATA: UPSTREAM(FEET) =   487.00  DOWNSTREAM(FEET) =   486.00
  FLOW LENGTH(FEET) =   140.00   MANNING'S N =  0.013
  DEPTH OF FLOW IN  18.0 INCH PIPE IS   6.5 INCHES
  PIPE-FLOW VELOCITY(FEET/SEC.) =   4.11
  GIVEN PIPE DIAMETER(INCH) =  18.00    NUMBER OF PIPES =   1
  PIPE-FLOW(CFS) =      2.37
  PIPE TRAVEL TIME(MIN.) =   0.57    Tc(MIN.) =   7.74
  LONGEST FLOWPATH FROM NODE    243.00 TO NODE    247.00 =   333.00 FEET.

****************************************************************************
  FLOW PROCESS FROM NODE    247.00 TO NODE    247.00 IS CODE =  81
```

```
----------------------------------------------------------------------------
  >>>>>ADDITION OF SUBAREA TO MAINLINE PEAK FLOW<<<<<
============================================================================
   100 YEAR RAINFALL INTENSITY(INCH/HOUR) =  3.880
  *USER SPECIFIED(SUBAREA):
  MULTI-UNITS DEVELOPMENT RUNOFF COEFFICIENT = .8300
  S.C.S. CURVE NUMBER (AMC II) =   0
  SUBAREA AREA(ACRES) =    1.10   SUBAREA RUNOFF(CFS) =    3.54
  TOTAL AREA(ACRES) =      1.80   TOTAL RUNOFF(CFS) =    5.91
  TC(MIN.) =   7.74

****************************************************************************
  FLOW PROCESS FROM NODE    247.00 TO NODE    247.00 IS CODE =   1
----------------------------------------------------------------------------
  >>>>>DESIGNATE INDEPENDENT STREAM FOR CONFLUENCE<<<<<
  >>>>>AND COMPUTE VARIOUS CONFLUENCED STREAM VALUES<<<<<
============================================================================
  TOTAL NUMBER OF STREAMS =  2
  CONFLUENCE VALUES USED FOR INDEPENDENT STREAM  2 ARE:
  TIME OF CONCENTRATION(MIN.) =   7.74
  RAINFALL INTENSITY(INCH/HR) =   3.88
  TOTAL STREAM AREA(ACRES) =     1.80
  PEAK FLOW RATE(CFS) AT CONFLUENCE =      5.91

  ** CONFLUENCE DATA **
  STREAM     RUNOFF      Tc      INTENSITY      AREA
  NUMBER      (CFS)    (MIN.)   (INCH/HOUR)    (ACRE)
      1        0.91     8.16        3.800          0.30
      2        5.91     7.74        3.880          1.80

  RAINFALL INTENSITY AND TIME OF CONCENTRATION RATIO
  CONFLUENCE FORMULA USED FOR  2 STREAMS.

  ** PEAK FLOW RATE TABLE **
  STREAM     RUNOFF      Tc      INTENSITY
  NUMBER      (CFS)    (MIN.)   (INCH/HOUR)
      1        6.81     7.74       3.880
      2        6.71     8.16       3.800

  COMPUTED CONFLUENCE ESTIMATES ARE AS FOLLOWS:
  PEAK FLOW RATE(CFS) =      6.81   Tc(MIN.) =    7.74
  TOTAL AREA(ACRES) =      2.10
  LONGEST FLOWPATH FROM NODE    243.00 TO NODE    247.00 =   333.00 FEET.

****************************************************************************
  FLOW PROCESS FROM NODE    247.00 TO NODE    249.00 IS CODE =  41
----------------------------------------------------------------------------
  >>>>>COMPUTE PIPE-FLOW TRAVEL TIME THRU SUBAREA<<<<<
  >>>>>USING USER-SPECIFIED PIPESIZE (EXISTING ELEMENT)<<<<<
============================================================================
```

```
  ELEVATION DATA: UPSTREAM(FEET) =   486.00  DOWNSTREAM(FEET) =   484.00
  FLOW LENGTH(FEET) =   270.00   MANNING'S N =  0.013
  DEPTH OF FLOW IN  24.0 INCH PIPE IS  10.1 INCHES
  PIPE-FLOW VELOCITY(FEET/SEC.) =   5.44
  GIVEN PIPE DIAMETER(INCH) =  24.00    NUMBER OF PIPES =   1
  PIPE-FLOW(CFS) =      6.81
  PIPE TRAVEL TIME(MIN.) =   0.83    Tc(MIN.) =   8.56
  LONGEST FLOWPATH FROM NODE    243.00 TO NODE    249.00 =   603.00 FEET.

****************************************************************************
  FLOW PROCESS FROM NODE    249.00 TO NODE    249.00 IS CODE =  81
----------------------------------------------------------------------------
  >>>>>ADDITION OF SUBAREA TO MAINLINE PEAK FLOW<<<<<
============================================================================
   100 YEAR RAINFALL INTENSITY(INCH/HOUR) =  3.723
  *USER SPECIFIED(SUBAREA):
  MULTI-UNITS DEVELOPMENT RUNOFF COEFFICIENT = .8500
  S.C.S. CURVE NUMBER (AMC II) =   0
  SUBAREA AREA(ACRES) =    0.90   SUBAREA RUNOFF(CFS) =    2.85
  TOTAL AREA(ACRES) =      3.00   TOTAL RUNOFF(CFS) =    9.66
  TC(MIN.) =   8.56

****************************************************************************
  FLOW PROCESS FROM NODE    249.00 TO NODE    254.00 IS CODE =  41
----------------------------------------------------------------------------
  >>>>>COMPUTE PIPE-FLOW TRAVEL TIME THRU SUBAREA<<<<<
  >>>>>USING USER-SPECIFIED PIPESIZE (EXISTING ELEMENT)<<<<<
============================================================================
  ELEVATION DATA: UPSTREAM(FEET) =   484.00  DOWNSTREAM(FEET) =   482.00
  FLOW LENGTH(FEET) =   239.00   MANNING'S N =  0.013
  DEPTH OF FLOW IN  24.0 INCH PIPE IS  11.9 INCHES
  PIPE-FLOW VELOCITY(FEET/SEC.) =   6.23
  GIVEN PIPE DIAMETER(INCH) =  24.00    NUMBER OF PIPES =   1
  PIPE-FLOW(CFS) =      9.66
  PIPE TRAVEL TIME(MIN.) =   0.64    Tc(MIN.) =   9.20
  LONGEST FLOWPATH FROM NODE    243.00 TO NODE    254.00 =   842.00 FEET.

****************************************************************************
  FLOW PROCESS FROM NODE    254.00 TO NODE    254.00 IS CODE =   1
----------------------------------------------------------------------------
  >>>>>DESIGNATE INDEPENDENT STREAM FOR CONFLUENCE<<<<<
============================================================================
  TOTAL NUMBER OF STREAMS =  2
  CONFLUENCE VALUES USED FOR INDEPENDENT STREAM  1 ARE:
  TIME OF CONCENTRATION(MIN.) =   9.20
  RAINFALL INTENSITY(INCH/HR) =   3.60
  TOTAL STREAM AREA(ACRES) =     3.00
  PEAK FLOW RATE(CFS) AT CONFLUENCE =      9.66

****************************************************************************
```

```
  FLOW PROCESS FROM NODE    250.00 TO NODE    251.00 IS CODE =  21
----------------------------------------------------------------------------
  >>>>>RATIONAL METHOD INITIAL SUBAREA ANALYSIS<<<<<
============================================================================
  *USER SPECIFIED(SUBAREA):
  MULTI-UNITS DEVELOPMENT RUNOFF COEFFICIENT = .8000
  S.C.S. CURVE NUMBER (AMC II) =   0
  INITIAL SUBAREA FLOW-LENGTH(FEET) =    87.00
  UPSTREAM ELEVATION(FEET) =    490.00
  DOWNSTREAM ELEVATION(FEET) =    489.00
  ELEVATION DIFFERENCE(FEET) =      1.00
  URBAN SUBAREA OVERLAND TIME OF FLOW(MIN.) =    4.808
  TIME OF CONCENTRATION ASSUMED AS 6-MIN.
   100 YEAR RAINFALL INTENSITY(INCH/HOUR) =  4.210
  SUBAREA RUNOFF(CFS) =      0.34
  TOTAL AREA(ACRES) =      0.10   TOTAL RUNOFF(CFS) =      0.34

****************************************************************************
  FLOW PROCESS FROM NODE    251.00 TO NODE    252.00 IS CODE =  62
----------------------------------------------------------------------------
  >>>>>COMPUTE STREET FLOW TRAVEL TIME THRU SUBAREA<<<<<
  >>>>>(STREET TABLE SECTION #  3 USED)<<<<<
============================================================================
  UPSTREAM ELEVATION(FEET) =  489.00  DOWNSTREAM ELEVATION(FEET) =  488.50
  STREET LENGTH(FEET) =   213.00   CURB HEIGHT(INCHES) =  6.0
  STREET HALFWIDTH(FEET) = 11.00

  DISTANCE FROM CROWN TO CROSSFALL GRADEBREAK(FEET) =   6.00
  INSIDE STREET CROSSFALL(DECIMAL) =  0.020
  OUTSIDE STREET CROSSFALL(DECIMAL)  =  0.018

  SPECIFIED NUMBER OF HALFSTREETS CARRYING RUNOFF =  1
  STREET PARKWAY CROSSFALL(DECIMAL)  =  0.020
  Manning's FRICTION FACTOR for Streetflow Section(curb-to-curb) =   0.0130
  Manning's FRICTION FACTOR for Back-of-Walk Flow Section =   0.0130

    **TRAVEL TIME COMPUTED USING ESTIMATED FLOW(CFS) =       0.98
    STREETFLOW MODEL RESULTS USING ESTIMATED FLOW:
    STREET FLOW DEPTH(FEET) =  0.29
    HALFSTREET FLOOD WIDTH(FEET) =    8.70
    AVERAGE FLOW VELOCITY(FEET/SEC.) =    1.14
    PRODUCT OF DEPTH&VELOCITY(FT*FT/SEC.) =    0.34
  STREET FLOW TRAVEL TIME(MIN.) =   3.10   Tc(MIN.) =   9.10
   100 YEAR RAINFALL INTENSITY(INCH/HOUR) =  3.620
  *USER SPECIFIED(SUBAREA):
  MULTI-UNITS DEVELOPMENT RUNOFF COEFFICIENT = .8800
  S.C.S. CURVE NUMBER (AMC II) =   0
  SUBAREA AREA(ACRES) =    0.40      SUBAREA RUNOFF(CFS) =    1.27
  TOTAL AREA(ACRES) =      0.50        PEAK FLOW RATE(CFS) =       1.61
```

```
  END OF SUBAREA STREET FLOW HYDRAULICS:
  DEPTH(FEET) = 0.33   HALFSTREET FLOOD WIDTH(FEET) =  10.77
  FLOW VELOCITY(FEET/SEC.) =  1.28   DEPTH*VELOCITY(FT*FT/SEC.) =   0.43
  LONGEST FLOWPATH FROM NODE    250.00 TO NODE    252.00 =   300.00 FEET.

****************************************************************************
  FLOW PROCESS FROM NODE    252.00 TO NODE    252.00 IS CODE =  81
----------------------------------------------------------------------------
  >>>>>ADDITION OF SUBAREA TO MAINLINE PEAK FLOW<<<<<
============================================================================
   100 YEAR RAINFALL INTENSITY(INCH/HOUR) =  3.620
  *USER SPECIFIED(SUBAREA):
  INDUSTRIAL DEVELOPMENT RUNOFF COEFFICIENT = .9500
  S.C.S. CURVE NUMBER (AMC II) =   0
  SUBAREA AREA(ACRES) =    0.40   SUBAREA RUNOFF(CFS) =    1.38
  TOTAL AREA(ACRES) =      0.90   TOTAL RUNOFF(CFS) =    2.99
  TC(MIN.) =   9.10

****************************************************************************
  FLOW PROCESS FROM NODE    252.00 TO NODE    253.00 IS CODE =  41
----------------------------------------------------------------------------
  >>>>>COMPUTE PIPE-FLOW TRAVEL TIME THRU SUBAREA<<<<<
  >>>>>USING USER-SPECIFIED PIPESIZE (EXISTING ELEMENT)<<<<<
============================================================================
  ELEVATION DATA: UPSTREAM(FEET) =   488.50  DOWNSTREAM(FEET) =   485.00
  FLOW LENGTH(FEET) =   300.00   MANNING'S N =  0.013
  DEPTH OF FLOW IN  24.0 INCH PIPE IS   5.8 INCHES
  PIPE-FLOW VELOCITY(FEET/SEC.) =   5.08
  GIVEN PIPE DIAMETER(INCH) =  24.00    NUMBER OF PIPES =   1
  PIPE-FLOW(CFS) =      2.99
  PIPE TRAVEL TIME(MIN.) =   0.98    Tc(MIN.) =  10.09
  LONGEST FLOWPATH FROM NODE    250.00 TO NODE    253.00 =   600.00 FEET.

****************************************************************************
  FLOW PROCESS FROM NODE    253.00 TO NODE    253.00 IS CODE =  81
----------------------------------------------------------------------------
  >>>>>ADDITION OF SUBAREA TO MAINLINE PEAK FLOW<<<<<
============================================================================
   100 YEAR RAINFALL INTENSITY(INCH/HOUR) =  3.440
  *USER SPECIFIED(SUBAREA):
  MULTI-UNITS DEVELOPMENT RUNOFF COEFFICIENT = .7400
  S.C.S. CURVE NUMBER (AMC II) =   0
  SUBAREA AREA(ACRES) =    0.90   SUBAREA RUNOFF(CFS) =    2.29
  TOTAL AREA(ACRES) =      1.80   TOTAL RUNOFF(CFS) =    5.28
  TC(MIN.) =  10.09

****************************************************************************
  FLOW PROCESS FROM NODE    253.00 TO NODE    254.00 IS CODE =  41
----------------------------------------------------------------------------
  >>>>>COMPUTE PIPE-FLOW TRAVEL TIME THRU SUBAREA<<<<<
```

```
  >>>>>USING USER-SPECIFIED PIPESIZE (EXISTING ELEMENT)<<<<<
================================================================================
  ELEVATION DATA: UPSTREAM(FEET) =   485.00  DOWNSTREAM(FEET) =   482.00
  FLOW LENGTH(FEET) =    37.00   MANNING'S N =  0.013
  DEPTH OF FLOW IN  24.0 INCH PIPE IS   4.8 INCHES
  PIPE-FLOW VELOCITY(FEET/SEC.) =  11.94
  GIVEN PIPE DIAMETER(INCH) =  24.00    NUMBER OF PIPES =   1
  PIPE-FLOW(CFS) =      5.28
  PIPE TRAVEL TIME(MIN.) =   0.05    Tc(MIN.) =  10.14
  LONGEST FLOWPATH FROM NODE    250.00 TO NODE    254.00 =   637.00 FEET.

****************************************************************************
  FLOW PROCESS FROM NODE    254.00 TO NODE    254.00 IS CODE =   1
----------------------------------------------------------------------------
  >>>>>DESIGNATE INDEPENDENT STREAM FOR CONFLUENCE<<<<<
  >>>>>AND COMPUTE VARIOUS CONFLUENCED STREAM VALUES<<<<<
================================================================================
  TOTAL NUMBER OF STREAMS =  2
  CONFLUENCE VALUES USED FOR INDEPENDENT STREAM  2 ARE:
  TIME OF CONCENTRATION(MIN.) =  10.14
  RAINFALL INTENSITY(INCH/HR) =   3.43
  TOTAL STREAM AREA(ACRES) =     1.80
  PEAK FLOW RATE(CFS) AT CONFLUENCE =      5.28

  ** CONFLUENCE DATA **
  STREAM     RUNOFF      Tc      INTENSITY      AREA
  NUMBER      (CFS)    (MIN.)   (INCH/HOUR)    (ACRE)
      1        9.66     9.20        3.602          3.00
      2        5.28    10.14        3.435          1.80

  RAINFALL INTENSITY AND TIME OF CONCENTRATION RATIO
  CONFLUENCE FORMULA USED FOR  2 STREAMS.

  ** PEAK FLOW RATE TABLE **
  STREAM     RUNOFF      Tc      INTENSITY
  NUMBER      (CFS)    (MIN.)   (INCH/HOUR)
      1       14.69     9.20       3.602
      2       14.49    10.14       3.435

  COMPUTED CONFLUENCE ESTIMATES ARE AS FOLLOWS:
  PEAK FLOW RATE(CFS) =     14.69   Tc(MIN.) =    9.20
  TOTAL AREA(ACRES) =      4.80
  LONGEST FLOWPATH FROM NODE    243.00 TO NODE    254.00 =   842.00 FEET.

****************************************************************************
  FLOW PROCESS FROM NODE    254.00 TO NODE    255.00 IS CODE =  41
----------------------------------------------------------------------------
  >>>>>COMPUTE PIPE-FLOW TRAVEL TIME THRU SUBAREA<<<<<
  >>>>>USING USER-SPECIFIED PIPESIZE (EXISTING ELEMENT)<<<<<
================================================================================
```

```
  ELEVATION DATA: UPSTREAM(FEET) =   482.00  DOWNSTREAM(FEET) =   481.50
  FLOW LENGTH(FEET) =    55.00   MANNING'S N =  0.013
  DEPTH OF FLOW IN  24.0 INCH PIPE IS  15.0 INCHES
  PIPE-FLOW VELOCITY(FEET/SEC.) =   7.10
  GIVEN PIPE DIAMETER(INCH) =  24.00    NUMBER OF PIPES =   1
  PIPE-FLOW(CFS) =     14.69
  PIPE TRAVEL TIME(MIN.) =   0.13    Tc(MIN.) =   9.33
  LONGEST FLOWPATH FROM NODE    243.00 TO NODE    255.00 =   897.00 FEET.

****************************************************************************
  FLOW PROCESS FROM NODE    255.00 TO NODE    255.00 IS CODE =  81
----------------------------------------------------------------------------
  >>>>>ADDITION OF SUBAREA TO MAINLINE PEAK FLOW<<<<<
============================================================================
   100 YEAR RAINFALL INTENSITY(INCH/HOUR) =  3.577
  *USER SPECIFIED(SUBAREA):
  INDUSTRIAL DEVELOPMENT RUNOFF COEFFICIENT = .9500
  S.C.S. CURVE NUMBER (AMC II) =   0
  SUBAREA AREA(ACRES) =    0.20   SUBAREA RUNOFF(CFS) =    0.68
  TOTAL AREA(ACRES) =      5.00   TOTAL RUNOFF(CFS) =   15.37
  TC(MIN.) =   9.33

****************************************************************************
  FLOW PROCESS FROM NODE    255.00 TO NODE    260.00 IS CODE =  41
----------------------------------------------------------------------------
  >>>>>COMPUTE PIPE-FLOW TRAVEL TIME THRU SUBAREA<<<<<
  >>>>>USING USER-SPECIFIED PIPESIZE (EXISTING ELEMENT)<<<<<
============================================================================
  ELEVATION DATA: UPSTREAM(FEET) =   481.50  DOWNSTREAM(FEET) =   481.25
  FLOW LENGTH(FEET) =    11.00   MANNING'S N =  0.013
  DEPTH OF FLOW IN  24.0 INCH PIPE IS  11.6 INCHES
  PIPE-FLOW VELOCITY(FEET/SEC.) =  10.18
  GIVEN PIPE DIAMETER(INCH) =  24.00    NUMBER OF PIPES =   1
  PIPE-FLOW(CFS) =     15.37
  PIPE TRAVEL TIME(MIN.) =   0.02    Tc(MIN.) =   9.35
  LONGEST FLOWPATH FROM NODE    243.00 TO NODE    260.00 =   908.00 FEET.

****************************************************************************
  FLOW PROCESS FROM NODE    260.00 TO NODE    260.00 IS CODE =   1
----------------------------------------------------------------------------
  >>>>>DESIGNATE INDEPENDENT STREAM FOR CONFLUENCE<<<<<
============================================================================
  TOTAL NUMBER OF STREAMS =  2
  CONFLUENCE VALUES USED FOR INDEPENDENT STREAM  1 ARE:
  TIME OF CONCENTRATION(MIN.) =   9.35
  RAINFALL INTENSITY(INCH/HR) =   3.57
  TOTAL STREAM AREA(ACRES) =     5.00
  PEAK FLOW RATE(CFS) AT CONFLUENCE =     15.37

****************************************************************************
```

```
  FLOW PROCESS FROM NODE    256.00 TO NODE    257.00 IS CODE =  21
----------------------------------------------------------------------------
  >>>>>RATIONAL METHOD INITIAL SUBAREA ANALYSIS<<<<<
============================================================================
  *USER SPECIFIED(SUBAREA):
  MULTI-UNITS DEVELOPMENT RUNOFF COEFFICIENT = .8800
  S.C.S. CURVE NUMBER (AMC II) =   0
  INITIAL SUBAREA FLOW-LENGTH(FEET) =    85.00
  UPSTREAM ELEVATION(FEET) =    491.00
  DOWNSTREAM ELEVATION(FEET) =    490.00
  ELEVATION DIFFERENCE(FEET) =      1.00
  URBAN SUBAREA OVERLAND TIME OF FLOW(MIN.) =    3.458
  TIME OF CONCENTRATION ASSUMED AS 6-MIN.
   100 YEAR RAINFALL INTENSITY(INCH/HOUR) =  4.210
  SUBAREA RUNOFF(CFS) =      0.74
  TOTAL AREA(ACRES) =      0.20   TOTAL RUNOFF(CFS) =      0.74

****************************************************************************
  FLOW PROCESS FROM NODE    257.00 TO NODE    258.00 IS CODE =  41
----------------------------------------------------------------------------
  >>>>>COMPUTE PIPE-FLOW TRAVEL TIME THRU SUBAREA<<<<<
  >>>>>USING USER-SPECIFIED PIPESIZE (EXISTING ELEMENT)<<<<<
============================================================================
  ELEVATION DATA: UPSTREAM(FEET) =   487.00  DOWNSTREAM(FEET) =   485.00
  FLOW LENGTH(FEET) =   288.00   MANNING'S N =  0.013
  DEPTH OF FLOW IN  18.0 INCH PIPE IS   3.6 INCHES
  PIPE-FLOW VELOCITY(FEET/SEC.) =   2.91
  GIVEN PIPE DIAMETER(INCH) =  18.00    NUMBER OF PIPES =   1
  PIPE-FLOW(CFS) =      0.74
  PIPE TRAVEL TIME(MIN.) =   1.65    Tc(MIN.) =   7.65
  LONGEST FLOWPATH FROM NODE    256.00 TO NODE    258.00 =   373.00 FEET.

****************************************************************************
  FLOW PROCESS FROM NODE    258.00 TO NODE    258.00 IS CODE =  81
----------------------------------------------------------------------------
  >>>>>ADDITION OF SUBAREA TO MAINLINE PEAK FLOW<<<<<
============================================================================
   100 YEAR RAINFALL INTENSITY(INCH/HOUR) =  3.897
  *USER SPECIFIED(SUBAREA):
  MULTI-UNITS DEVELOPMENT RUNOFF COEFFICIENT = .8400
  S.C.S. CURVE NUMBER (AMC II) =   0
  SUBAREA AREA(ACRES) =    0.80   SUBAREA RUNOFF(CFS) =    2.62
  TOTAL AREA(ACRES) =      1.00   TOTAL RUNOFF(CFS) =    3.36
  TC(MIN.) =   7.65

****************************************************************************
  FLOW PROCESS FROM NODE    258.00 TO NODE    259.00 IS CODE =  41
----------------------------------------------------------------------------
  >>>>>COMPUTE PIPE-FLOW TRAVEL TIME THRU SUBAREA<<<<<
  >>>>>USING USER-SPECIFIED PIPESIZE (EXISTING ELEMENT)<<<<<
```

```
============================================================================
  ELEVATION DATA: UPSTREAM(FEET) =   485.00  DOWNSTREAM(FEET) =   484.50
  FLOW LENGTH(FEET) =    25.00   MANNING'S N =  0.013
  DEPTH OF FLOW IN  18.0 INCH PIPE IS   6.0 INCHES
  PIPE-FLOW VELOCITY(FEET/SEC.) =   6.55
  GIVEN PIPE DIAMETER(INCH) =  18.00    NUMBER OF PIPES =   1
  PIPE-FLOW(CFS) =      3.36
  PIPE TRAVEL TIME(MIN.) =   0.06    Tc(MIN.) =   7.71
  LONGEST FLOWPATH FROM NODE    256.00 TO NODE    259.00 =   398.00 FEET.

****************************************************************************
  FLOW PROCESS FROM NODE    259.00 TO NODE    259.00 IS CODE =  81
----------------------------------------------------------------------------
  >>>>>ADDITION OF SUBAREA TO MAINLINE PEAK FLOW<<<<<
============================================================================
   100 YEAR RAINFALL INTENSITY(INCH/HOUR) =  3.885
  *USER SPECIFIED(SUBAREA):
  MULTI-UNITS DEVELOPMENT RUNOFF COEFFICIENT = .8500
  S.C.S. CURVE NUMBER (AMC II) =   0
  SUBAREA AREA(ACRES) =    0.30   SUBAREA RUNOFF(CFS) =    0.99
  TOTAL AREA(ACRES) =      1.30   TOTAL RUNOFF(CFS) =    4.35
  TC(MIN.) =   7.71

****************************************************************************
  FLOW PROCESS FROM NODE    259.00 TO NODE    260.00 IS CODE =  41
----------------------------------------------------------------------------
  >>>>>COMPUTE PIPE-FLOW TRAVEL TIME THRU SUBAREA<<<<<
  >>>>>USING USER-SPECIFIED PIPESIZE (EXISTING ELEMENT)<<<<<
============================================================================
  ELEVATION DATA: UPSTREAM(FEET) =   484.50  DOWNSTREAM(FEET) =   481.25
  FLOW LENGTH(FEET) =    95.00   MANNING'S N =  0.013
  DEPTH OF FLOW IN  24.0 INCH PIPE IS   5.4 INCHES
  PIPE-FLOW VELOCITY(FEET/SEC.) =   8.32
  GIVEN PIPE DIAMETER(INCH) =  24.00    NUMBER OF PIPES =   1
  PIPE-FLOW(CFS) =      4.35
  PIPE TRAVEL TIME(MIN.) =   0.19    Tc(MIN.) =   7.90
  LONGEST FLOWPATH FROM NODE    256.00 TO NODE    260.00 =   493.00 FEET.

****************************************************************************
  FLOW PROCESS FROM NODE    260.00 TO NODE    260.00 IS CODE =   1
----------------------------------------------------------------------------
  >>>>>DESIGNATE INDEPENDENT STREAM FOR CONFLUENCE<<<<<
  >>>>>AND COMPUTE VARIOUS CONFLUENCED STREAM VALUES<<<<<
============================================================================
  TOTAL NUMBER OF STREAMS =  2
  CONFLUENCE VALUES USED FOR INDEPENDENT STREAM  2 ARE:
  TIME OF CONCENTRATION(MIN.) =   7.90
  RAINFALL INTENSITY(INCH/HR) =   3.85
  TOTAL STREAM AREA(ACRES) =     1.30
  PEAK FLOW RATE(CFS) AT CONFLUENCE =      4.35
```

```
  ** CONFLUENCE DATA **
  STREAM     RUNOFF      Tc      INTENSITY      AREA
  NUMBER      (CFS)    (MIN.)   (INCH/HOUR)    (ACRE)
      1       15.37     9.35        3.574          5.00
      2        4.35     7.90        3.849          1.30

  RAINFALL INTENSITY AND TIME OF CONCENTRATION RATIO
  CONFLUENCE FORMULA USED FOR  2 STREAMS.

  ** PEAK FLOW RATE TABLE **
  STREAM     RUNOFF      Tc      INTENSITY
  NUMBER      (CFS)    (MIN.)   (INCH/HOUR)
      1       18.62     7.90       3.849
      2       19.41     9.35       3.574

  COMPUTED CONFLUENCE ESTIMATES ARE AS FOLLOWS:
  PEAK FLOW RATE(CFS) =     19.41   Tc(MIN.) =    9.35
  TOTAL AREA(ACRES) =      6.30
  LONGEST FLOWPATH FROM NODE    243.00 TO NODE    260.00 =   908.00 FEET.

****************************************************************************
  FLOW PROCESS FROM NODE    260.00 TO NODE    261.00 IS CODE =  41
----------------------------------------------------------------------------
  >>>>>COMPUTE PIPE-FLOW TRAVEL TIME THRU SUBAREA<<<<<
  >>>>>USING USER-SPECIFIED PIPESIZE (EXISTING ELEMENT)<<<<<
============================================================================
  ELEVATION DATA: UPSTREAM(FEET) =   481.25  DOWNSTREAM(FEET) =   481.00
  FLOW LENGTH(FEET) =    45.00   MANNING'S N =  0.013
  ASSUME FULL-FLOWING PIPELINE
  PIPE-FLOW VELOCITY(FEET/SEC.) =   6.18
  PIPE FLOW VELOCITY = (TOTAL FLOW)/(PIPE CROSS SECTION AREA)
  GIVEN PIPE DIAMETER(INCH) =  24.00    NUMBER OF PIPES =   1
  PIPE-FLOW(CFS) =     19.41
  PIPE TRAVEL TIME(MIN.) =   0.12    Tc(MIN.) =   9.47
  LONGEST FLOWPATH FROM NODE    243.00 TO NODE    261.00 =   953.00 FEET.

****************************************************************************
  FLOW PROCESS FROM NODE    261.00 TO NODE    261.00 IS CODE =  81
----------------------------------------------------------------------------
  >>>>>ADDITION OF SUBAREA TO MAINLINE PEAK FLOW<<<<<
============================================================================
   100 YEAR RAINFALL INTENSITY(INCH/HOUR) =  3.551
  *USER SPECIFIED(SUBAREA):
  INDUSTRIAL DEVELOPMENT RUNOFF COEFFICIENT = .9500
  S.C.S. CURVE NUMBER (AMC II) =   0
  SUBAREA AREA(ACRES) =    0.10   SUBAREA RUNOFF(CFS) =    0.34
  TOTAL AREA(ACRES) =      6.40   TOTAL RUNOFF(CFS) =   19.75
  TC(MIN.) =   9.47
```

```
****************************************************************************
  FLOW PROCESS FROM NODE    261.00 TO NODE    261.00 IS CODE =  81
----------------------------------------------------------------------------
  >>>>>ADDITION OF SUBAREA TO MAINLINE PEAK FLOW<<<<<
============================================================================
   100 YEAR RAINFALL INTENSITY(INCH/HOUR) =  3.551
  *USER SPECIFIED(SUBAREA):
  INDUSTRIAL DEVELOPMENT RUNOFF COEFFICIENT = .9500
  S.C.S. CURVE NUMBER (AMC II) =   0
  SUBAREA AREA(ACRES) =    0.10   SUBAREA RUNOFF(CFS) =    0.34
  TOTAL AREA(ACRES) =      6.50   TOTAL RUNOFF(CFS) =   20.08
  TC(MIN.) =   9.47

****************************************************************************
  FLOW PROCESS FROM NODE    261.00 TO NODE    265.00 IS CODE =  41
----------------------------------------------------------------------------
  >>>>>COMPUTE PIPE-FLOW TRAVEL TIME THRU SUBAREA<<<<<
  >>>>>USING USER-SPECIFIED PIPESIZE (EXISTING ELEMENT)<<<<<
============================================================================
  ELEVATION DATA: UPSTREAM(FEET) =   481.00  DOWNSTREAM(FEET) =   479.00
  FLOW LENGTH(FEET) =   203.00   MANNING'S N =  0.013
  DEPTH OF FLOW IN  30.0 INCH PIPE IS  15.3 INCHES
  PIPE-FLOW VELOCITY(FEET/SEC.) =   7.95
  GIVEN PIPE DIAMETER(INCH) =  30.00    NUMBER OF PIPES =   1
  PIPE-FLOW(CFS) =     20.08
  PIPE TRAVEL TIME(MIN.) =   0.43    Tc(MIN.) =   9.90
  LONGEST FLOWPATH FROM NODE    243.00 TO NODE    265.00 =  1156.00 FEET.

****************************************************************************
  FLOW PROCESS FROM NODE    265.00 TO NODE    265.00 IS CODE =  81
----------------------------------------------------------------------------
  >>>>>ADDITION OF SUBAREA TO MAINLINE PEAK FLOW<<<<<
============================================================================
   100 YEAR RAINFALL INTENSITY(INCH/HOUR) =  3.470
  *USER SPECIFIED(SUBAREA):
  INDUSTRIAL DEVELOPMENT RUNOFF COEFFICIENT = .9500
  S.C.S. CURVE NUMBER (AMC II) =   0
  SUBAREA AREA(ACRES) =    1.10   SUBAREA RUNOFF(CFS) =    3.63
  TOTAL AREA(ACRES) =      7.60   TOTAL RUNOFF(CFS) =   23.71
  TC(MIN.) =   9.90

****************************************************************************
  FLOW PROCESS FROM NODE    265.00 TO NODE    268.00 IS CODE =  41
----------------------------------------------------------------------------
  >>>>>COMPUTE PIPE-FLOW TRAVEL TIME THRU SUBAREA<<<<<
  >>>>>USING USER-SPECIFIED PIPESIZE (EXISTING ELEMENT)<<<<<
============================================================================
  ELEVATION DATA: UPSTREAM(FEET) =   479.00  DOWNSTREAM(FEET) =   478.00
  FLOW LENGTH(FEET) =    70.00   MANNING'S N =  0.013
  DEPTH OF FLOW IN  36.0 INCH PIPE IS  13.8 INCHES
```

```
  PIPE-FLOW VELOCITY(FEET/SEC.) =   9.47
  GIVEN PIPE DIAMETER(INCH) =  36.00    NUMBER OF PIPES =   1
  PIPE-FLOW(CFS) =     23.71
  PIPE TRAVEL TIME(MIN.) =   0.12    Tc(MIN.) =  10.02
  LONGEST FLOWPATH FROM NODE    243.00 TO NODE    268.00 =  1226.00 FEET.

****************************************************************************
  FLOW PROCESS FROM NODE    268.00 TO NODE    268.00 IS CODE =  11
----------------------------------------------------------------------------
  >>>>>CONFLUENCE MEMORY BANK # 1 WITH THE MAIN-STREAM MEMORY<<<<<
============================================================================

  ** MAIN STREAM CONFLUENCE DATA **
  STREAM     RUNOFF     Tc      INTENSITY     AREA
  NUMBER      (CFS)   (MIN.)   (INCH/HOUR)   (ACRE)
      1       23.71    10.02       3.448        7.60
  LONGEST FLOWPATH FROM NODE    243.00 TO NODE    268.00 =  1226.00 FEET.

  ** MEMORY BANK #  1 CONFLUENCE DATA **
  STREAM     RUNOFF     Tc      INTENSITY     AREA
  NUMBER      (CFS)   (MIN.)   (INCH/HOUR)   (ACRE)
      1       21.36    13.88       3.023        7.60
  LONGEST FLOWPATH FROM NODE    200.00 TO NODE    268.00 =  1651.00 FEET.

  ** PEAK FLOW RATE TABLE **
  STREAM    RUNOFF       Tc      INTENSITY
  NUMBER     (CFS)     (MIN.)   (INCH/HOUR)
      1      42.44      10.02        3.448
      2      42.15      13.88        3.023

  COMPUTED CONFLUENCE ESTIMATES ARE AS FOLLOWS:
  PEAK FLOW RATE(CFS) =     42.44   Tc(MIN.) =   10.02
  TOTAL AREA(ACRES) =     15.20

****************************************************************************
  FLOW PROCESS FROM NODE    268.00 TO NODE    268.00 IS CODE =  12
----------------------------------------------------------------------------
  >>>>>CLEAR MEMORY BANK # 1 <<<<<
============================================================================

****************************************************************************
  FLOW PROCESS FROM NODE    268.00 TO NODE    269.00 IS CODE =  41
----------------------------------------------------------------------------
  >>>>>COMPUTE PIPE-FLOW TRAVEL TIME THRU SUBAREA<<<<<
  >>>>>USING USER-SPECIFIED PIPESIZE (EXISTING ELEMENT)<<<<<
============================================================================
  ELEVATION DATA: UPSTREAM(FEET) =   478.00  DOWNSTREAM(FEET) =   475.00
  FLOW LENGTH(FEET) =   474.00   MANNING'S N =  0.013
  DEPTH OF FLOW IN  36.0 INCH PIPE IS  25.3 INCHES
  PIPE-FLOW VELOCITY(FEET/SEC.) =   7.99
```

```
  GIVEN PIPE DIAMETER(INCH) =  36.00    NUMBER OF PIPES =   1
  PIPE-FLOW(CFS) =     42.44
  PIPE TRAVEL TIME(MIN.) =   0.99    Tc(MIN.) =  11.01
  LONGEST FLOWPATH FROM NODE    200.00 TO NODE    269.00 =  2125.00 FEET.

****************************************************************************
  FLOW PROCESS FROM NODE    269.00 TO NODE    269.00 IS CODE =  81
----------------------------------------------------------------------------
  >>>>>ADDITION OF SUBAREA TO MAINLINE PEAK FLOW<<<<<
============================================================================
   100 YEAR RAINFALL INTENSITY(INCH/HOUR) =  3.339
  *USER SPECIFIED(SUBAREA):
  INDUSTRIAL DEVELOPMENT RUNOFF COEFFICIENT = .9500
  S.C.S. CURVE NUMBER (AMC II) =   0
  SUBAREA AREA(ACRES) =    1.00   SUBAREA RUNOFF(CFS) =    3.17
  TOTAL AREA(ACRES) =     16.20   TOTAL RUNOFF(CFS) =   45.61
  TC(MIN.) =  11.01

****************************************************************************
  FLOW PROCESS FROM NODE    269.00 TO NODE    287.00 IS CODE =  41
----------------------------------------------------------------------------
  >>>>>COMPUTE PIPE-FLOW TRAVEL TIME THRU SUBAREA<<<<<
  >>>>>USING USER-SPECIFIED PIPESIZE (EXISTING ELEMENT)<<<<<
============================================================================
  ELEVATION DATA: UPSTREAM(FEET) =   475.00  DOWNSTREAM(FEET) =   470.00
  FLOW LENGTH(FEET) =   310.00   MANNING'S N =  0.013
  DEPTH OF FLOW IN  42.0 INCH PIPE IS  17.8 INCHES
  PIPE-FLOW VELOCITY(FEET/SEC.) =  11.72
  GIVEN PIPE DIAMETER(INCH) =  42.00    NUMBER OF PIPES =   1
  PIPE-FLOW(CFS) =     45.61
  PIPE TRAVEL TIME(MIN.) =   0.44    Tc(MIN.) =  11.45
  LONGEST FLOWPATH FROM NODE    200.00 TO NODE    287.00 =  2435.00 FEET.

****************************************************************************
  FLOW PROCESS FROM NODE    287.00 TO NODE    287.00 IS CODE =  10
----------------------------------------------------------------------------
  >>>>>MAIN-STREAM MEMORY COPIED ONTO MEMORY BANK # 1 <<<<<
============================================================================

****************************************************************************
  FLOW PROCESS FROM NODE    270.00 TO NODE    271.00 IS CODE =  21
----------------------------------------------------------------------------
  >>>>>RATIONAL METHOD INITIAL SUBAREA ANALYSIS<<<<<
============================================================================
  *USER SPECIFIED(SUBAREA):
  SINGLE FAMILY DEVELOPMENT RUNOFF COEFFICIENT = .7900
  S.C.S. CURVE NUMBER (AMC II) =   0
  INITIAL SUBAREA FLOW-LENGTH(FEET) =    96.00
  UPSTREAM ELEVATION(FEET) =    496.00
  DOWNSTREAM ELEVATION(FEET) =    495.00
```

```
  ELEVATION DIFFERENCE(FEET) =      1.00
  URBAN SUBAREA OVERLAND TIME OF FLOW(MIN.) =    5.393
  TIME OF CONCENTRATION ASSUMED AS 6-MIN.
   100 YEAR RAINFALL INTENSITY(INCH/HOUR) =  4.210
  SUBAREA RUNOFF(CFS) =      0.33
  TOTAL AREA(ACRES) =      0.10   TOTAL RUNOFF(CFS) =      0.33

****************************************************************************
  FLOW PROCESS FROM NODE    271.00 TO NODE    272.00 IS CODE =  62
----------------------------------------------------------------------------
  >>>>>COMPUTE STREET FLOW TRAVEL TIME THRU SUBAREA<<<<<
  >>>>>(STREET TABLE SECTION #  2 USED)<<<<<
============================================================================
  UPSTREAM ELEVATION(FEET) =  495.00  DOWNSTREAM ELEVATION(FEET) =  490.00
  STREET LENGTH(FEET) =   134.00   CURB HEIGHT(INCHES) =  6.0
  STREET HALFWIDTH(FEET) = 20.00

  DISTANCE FROM CROWN TO CROSSFALL GRADEBREAK(FEET) =  15.00
  INSIDE STREET CROSSFALL(DECIMAL) =  0.020
  OUTSIDE STREET CROSSFALL(DECIMAL)  =  0.020

  SPECIFIED NUMBER OF HALFSTREETS CARRYING RUNOFF =  2
  STREET PARKWAY CROSSFALL(DECIMAL)  =  0.020
  Manning's FRICTION FACTOR for Streetflow Section(curb-to-curb) =   0.0180
  Manning's FRICTION FACTOR for Back-of-Walk Flow Section =   0.0200

    **TRAVEL TIME COMPUTED USING ESTIMATED FLOW(CFS) =       0.83
    STREETFLOW MODEL RESULTS USING ESTIMATED FLOW:
    STREET FLOW DEPTH(FEET) =  0.17
    HALFSTREET FLOOD WIDTH(FEET) =    3.06
    AVERAGE FLOW VELOCITY(FEET/SEC.) =    2.30
    PRODUCT OF DEPTH&VELOCITY(FT*FT/SEC.) =    0.38
  STREET FLOW TRAVEL TIME(MIN.) =   0.97   Tc(MIN.) =   6.97
   100 YEAR RAINFALL INTENSITY(INCH/HOUR) =  4.026
  *USER SPECIFIED(SUBAREA):
  SINGLE FAMILY DEVELOPMENT RUNOFF COEFFICIENT = .8200
  S.C.S. CURVE NUMBER (AMC II) =   0
  SUBAREA AREA(ACRES) =    0.30      SUBAREA RUNOFF(CFS) =    0.99
  TOTAL AREA(ACRES) =      0.40        PEAK FLOW RATE(CFS) =       1.32

  END OF SUBAREA STREET FLOW HYDRAULICS:
  DEPTH(FEET) = 0.19   HALFSTREET FLOOD WIDTH(FEET) =   4.32
  FLOW VELOCITY(FEET/SEC.) =  2.43   DEPTH*VELOCITY(FT*FT/SEC.) =   0.46
  LONGEST FLOWPATH FROM NODE    270.00 TO NODE    272.00 =   230.00 FEET.

****************************************************************************
  FLOW PROCESS FROM NODE    272.00 TO NODE    272.00 IS CODE =  81
----------------------------------------------------------------------------
  >>>>>ADDITION OF SUBAREA TO MAINLINE PEAK FLOW<<<<<
============================================================================
```

```
    100 YEAR RAINFALL INTENSITY(INCH/HOUR) =  4.026
   *USER SPECIFIED(SUBAREA):
   SINGLE FAMILY DEVELOPMENT RUNOFF COEFFICIENT = .7300
   S.C.S. CURVE NUMBER (AMC II) =   0
   SUBAREA AREA(ACRES) =    0.40   SUBAREA RUNOFF(CFS) =    1.18
   TOTAL AREA(ACRES) =      0.80   TOTAL RUNOFF(CFS) =    2.50
   TC(MIN.) =   6.97

****************************************************************************
   FLOW PROCESS FROM NODE    272.00 TO NODE    273.00 IS CODE =  41
----------------------------------------------------------------------------
   >>>>>COMPUTE PIPE-FLOW TRAVEL TIME THRU SUBAREA<<<<<
   >>>>>USING USER-SPECIFIED PIPESIZE (EXISTING ELEMENT)<<<<<
============================================================================
   ELEVATION DATA: UPSTREAM(FEET) =   487.00  DOWNSTREAM(FEET) =   485.00
   FLOW LENGTH(FEET) =   257.00   MANNING'S N =  0.013
   DEPTH OF FLOW IN  18.0 INCH PIPE IS   6.6 INCHES
   PIPE-FLOW VELOCITY(FEET/SEC.) =   4.29
   GIVEN PIPE DIAMETER(INCH) =  18.00    NUMBER OF PIPES =   1
   PIPE-FLOW(CFS) =      2.50
   PIPE TRAVEL TIME(MIN.) =   1.00    Tc(MIN.) =   7.97
   LONGEST FLOWPATH FROM NODE    270.00 TO NODE    273.00 =   487.00 FEET.

****************************************************************************
   FLOW PROCESS FROM NODE    273.00 TO NODE    273.00 IS CODE =  81
----------------------------------------------------------------------------
   >>>>>ADDITION OF SUBAREA TO MAINLINE PEAK FLOW<<<<<
============================================================================
    100 YEAR RAINFALL INTENSITY(INCH/HOUR) =  3.836
   *USER SPECIFIED(SUBAREA):
   SINGLE FAMILY DEVELOPMENT RUNOFF COEFFICIENT = .6100
   S.C.S. CURVE NUMBER (AMC II) =   0
   SUBAREA AREA(ACRES) =    0.90   SUBAREA RUNOFF(CFS) =    2.11
   TOTAL AREA(ACRES) =      1.70   TOTAL RUNOFF(CFS) =    4.60
   TC(MIN.) =   7.97

****************************************************************************
   FLOW PROCESS FROM NODE    273.00 TO NODE    274.00 IS CODE =  41
----------------------------------------------------------------------------
   >>>>>COMPUTE PIPE-FLOW TRAVEL TIME THRU SUBAREA<<<<<
   >>>>>USING USER-SPECIFIED PIPESIZE (EXISTING ELEMENT)<<<<<
============================================================================
   ELEVATION DATA: UPSTREAM(FEET) =   485.00  DOWNSTREAM(FEET) =   484.00
   FLOW LENGTH(FEET) =   177.00   MANNING'S N =  0.013
   DEPTH OF FLOW IN  24.0 INCH PIPE IS   8.8 INCHES
   PIPE-FLOW VELOCITY(FEET/SEC.) =   4.43
   GIVEN PIPE DIAMETER(INCH) =  24.00    NUMBER OF PIPES =   1
   PIPE-FLOW(CFS) =      4.60
   PIPE TRAVEL TIME(MIN.) =   0.67    Tc(MIN.) =   8.63
   LONGEST FLOWPATH FROM NODE    270.00 TO NODE    274.00 =   664.00 FEET.
```

```
****************************************************************************
  FLOW PROCESS FROM NODE    274.00 TO NODE    274.00 IS CODE =  81
----------------------------------------------------------------------------
  >>>>>ADDITION OF SUBAREA TO MAINLINE PEAK FLOW<<<<<
============================================================================
   100 YEAR RAINFALL INTENSITY(INCH/HOUR) =  3.710
  *USER SPECIFIED(SUBAREA):
  SINGLE FAMILY DEVELOPMENT RUNOFF COEFFICIENT = .8000
  S.C.S. CURVE NUMBER (AMC II) =   0
  SUBAREA AREA(ACRES) =    0.90   SUBAREA RUNOFF(CFS) =    2.67
  TOTAL AREA(ACRES) =      2.60   TOTAL RUNOFF(CFS) =    7.28
  TC(MIN.) =   8.63

****************************************************************************
  FLOW PROCESS FROM NODE    274.00 TO NODE    275.00 IS CODE =  41
----------------------------------------------------------------------------
  >>>>>COMPUTE PIPE-FLOW TRAVEL TIME THRU SUBAREA<<<<<
  >>>>>USING USER-SPECIFIED PIPESIZE (EXISTING ELEMENT)<<<<<
============================================================================
  ELEVATION DATA: UPSTREAM(FEET) =   484.00  DOWNSTREAM(FEET) =   483.00
  FLOW LENGTH(FEET) =   141.00   MANNING'S N =  0.013
  DEPTH OF FLOW IN  24.0 INCH PIPE IS  10.6 INCHES
  PIPE-FLOW VELOCITY(FEET/SEC.) =   5.45
  GIVEN PIPE DIAMETER(INCH) =  24.00    NUMBER OF PIPES =   1
  PIPE-FLOW(CFS) =      7.28
  PIPE TRAVEL TIME(MIN.) =   0.43    Tc(MIN.) =   9.06
  LONGEST FLOWPATH FROM NODE    270.00 TO NODE    275.00 =   805.00 FEET.

****************************************************************************
  FLOW PROCESS FROM NODE    275.00 TO NODE    275.00 IS CODE =  81
----------------------------------------------------------------------------
  >>>>>ADDITION OF SUBAREA TO MAINLINE PEAK FLOW<<<<<
============================================================================
   100 YEAR RAINFALL INTENSITY(INCH/HOUR) =  3.628
  *USER SPECIFIED(SUBAREA):
  SINGLE FAMILY DEVELOPMENT RUNOFF COEFFICIENT = .8200
  S.C.S. CURVE NUMBER (AMC II) =   0
  SUBAREA AREA(ACRES) =    0.60   SUBAREA RUNOFF(CFS) =    1.78
  TOTAL AREA(ACRES) =      3.20   TOTAL RUNOFF(CFS) =    9.06
  TC(MIN.) =   9.06

****************************************************************************
  FLOW PROCESS FROM NODE    275.00 TO NODE    280.00 IS CODE =  41
----------------------------------------------------------------------------
  >>>>>COMPUTE PIPE-FLOW TRAVEL TIME THRU SUBAREA<<<<<
  >>>>>USING USER-SPECIFIED PIPESIZE (EXISTING ELEMENT)<<<<<
============================================================================
  ELEVATION DATA: UPSTREAM(FEET) =   483.00  DOWNSTREAM(FEET) =   482.00
  FLOW LENGTH(FEET) =    77.00   MANNING'S N =  0.013
```

```
  DEPTH OF FLOW IN  24.0 INCH PIPE IS  10.1 INCHES
  PIPE-FLOW VELOCITY(FEET/SEC.) =   7.22
  GIVEN PIPE DIAMETER(INCH) =  24.00    NUMBER OF PIPES =   1
  PIPE-FLOW(CFS) =      9.06
  PIPE TRAVEL TIME(MIN.) =   0.18    Tc(MIN.) =   9.24
  LONGEST FLOWPATH FROM NODE    270.00 TO NODE    280.00 =   882.00 FEET.

****************************************************************************
  FLOW PROCESS FROM NODE    280.00 TO NODE    280.00 IS CODE =  81
----------------------------------------------------------------------------
  >>>>>ADDITION OF SUBAREA TO MAINLINE PEAK FLOW<<<<<
============================================================================
   100 YEAR RAINFALL INTENSITY(INCH/HOUR) =  3.594
  *USER SPECIFIED(SUBAREA):
  SINGLE FAMILY DEVELOPMENT RUNOFF COEFFICIENT = .8000
  S.C.S. CURVE NUMBER (AMC II) =   0
  SUBAREA AREA(ACRES) =    0.20   SUBAREA RUNOFF(CFS) =    0.58
  TOTAL AREA(ACRES) =      3.40   TOTAL RUNOFF(CFS) =    9.64
  TC(MIN.) =   9.24

****************************************************************************
  FLOW PROCESS FROM NODE    280.00 TO NODE    280.00 IS CODE =   1
----------------------------------------------------------------------------
  >>>>>DESIGNATE INDEPENDENT STREAM FOR CONFLUENCE<<<<<
============================================================================
  TOTAL NUMBER OF STREAMS =  2
  CONFLUENCE VALUES USED FOR INDEPENDENT STREAM  1 ARE:
  TIME OF CONCENTRATION(MIN.) =   9.24
  RAINFALL INTENSITY(INCH/HR) =   3.59
  TOTAL STREAM AREA(ACRES) =     3.40
  PEAK FLOW RATE(CFS) AT CONFLUENCE =      9.64

****************************************************************************
  FLOW PROCESS FROM NODE    276.00 TO NODE    277.00 IS CODE =  21
----------------------------------------------------------------------------
  >>>>>RATIONAL METHOD INITIAL SUBAREA ANALYSIS<<<<<
============================================================================
  *USER SPECIFIED(SUBAREA):
  SINGLE FAMILY DEVELOPMENT RUNOFF COEFFICIENT = .7900
  S.C.S. CURVE NUMBER (AMC II) =   0
  INITIAL SUBAREA FLOW-LENGTH(FEET) =    98.00
  UPSTREAM ELEVATION(FEET) =    492.00
  DOWNSTREAM ELEVATION(FEET) =    491.00
  ELEVATION DIFFERENCE(FEET) =      1.00
  URBAN SUBAREA OVERLAND TIME OF FLOW(MIN.) =    5.487
  TIME OF CONCENTRATION ASSUMED AS 6-MIN.
   100 YEAR RAINFALL INTENSITY(INCH/HOUR) =  4.210
  SUBAREA RUNOFF(CFS) =      0.33
  TOTAL AREA(ACRES) =      0.10   TOTAL RUNOFF(CFS) =      0.33
```

```
****************************************************************************
  FLOW PROCESS FROM NODE    277.00 TO NODE    278.00 IS CODE =  62
----------------------------------------------------------------------------
  >>>>>COMPUTE STREET FLOW TRAVEL TIME THRU SUBAREA<<<<<
  >>>>>(STREET TABLE SECTION #  2 USED)<<<<<
============================================================================
  UPSTREAM ELEVATION(FEET) =  491.00  DOWNSTREAM ELEVATION(FEET) =  489.00
  STREET LENGTH(FEET) =   169.00   CURB HEIGHT(INCHES) =  6.0
  STREET HALFWIDTH(FEET) = 20.00

  DISTANCE FROM CROWN TO CROSSFALL GRADEBREAK(FEET) =  15.00
  INSIDE STREET CROSSFALL(DECIMAL) =  0.020
  OUTSIDE STREET CROSSFALL(DECIMAL)  =  0.020

  SPECIFIED NUMBER OF HALFSTREETS CARRYING RUNOFF =  2
  STREET PARKWAY CROSSFALL(DECIMAL)  =  0.020
  Manning's FRICTION FACTOR for Streetflow Section(curb-to-curb) =   0.0180
  Manning's FRICTION FACTOR for Back-of-Walk Flow Section =   0.0200

    **TRAVEL TIME COMPUTED USING ESTIMATED FLOW(CFS) =       0.95
    STREETFLOW MODEL RESULTS USING ESTIMATED FLOW:
    STREET FLOW DEPTH(FEET) =  0.20
    HALFSTREET FLOOD WIDTH(FEET) =    4.97
    AVERAGE FLOW VELOCITY(FEET/SEC.) =    1.43
    PRODUCT OF DEPTH&VELOCITY(FT*FT/SEC.) =    0.29
  STREET FLOW TRAVEL TIME(MIN.) =   1.97   Tc(MIN.) =   7.97
   100 YEAR RAINFALL INTENSITY(INCH/HOUR) =  3.836
  *USER SPECIFIED(SUBAREA):
  SINGLE FAMILY DEVELOPMENT RUNOFF COEFFICIENT = .8100
  S.C.S. CURVE NUMBER (AMC II) =   0
  SUBAREA AREA(ACRES) =    0.40      SUBAREA RUNOFF(CFS) =    1.24
  TOTAL AREA(ACRES) =      0.50        PEAK FLOW RATE(CFS) =       1.58

  END OF SUBAREA STREET FLOW HYDRAULICS:
  DEPTH(FEET) = 0.23   HALFSTREET FLOOD WIDTH(FEET) =   6.38
  FLOW VELOCITY(FEET/SEC.) =  1.60   DEPTH*VELOCITY(FT*FT/SEC.) =   0.37
  LONGEST FLOWPATH FROM NODE    276.00 TO NODE    278.00 =   267.00 FEET.

****************************************************************************
  FLOW PROCESS FROM NODE    278.00 TO NODE    278.00 IS CODE =  81
----------------------------------------------------------------------------
  >>>>>ADDITION OF SUBAREA TO MAINLINE PEAK FLOW<<<<<
============================================================================
   100 YEAR RAINFALL INTENSITY(INCH/HOUR) =  3.836
  *USER SPECIFIED(SUBAREA):
  SINGLE FAMILY DEVELOPMENT RUNOFF COEFFICIENT = .7900
  S.C.S. CURVE NUMBER (AMC II) =   0
  SUBAREA AREA(ACRES) =    0.50   SUBAREA RUNOFF(CFS) =    1.52
  TOTAL AREA(ACRES) =      1.00   TOTAL RUNOFF(CFS) =    3.09
  TC(MIN.) =   7.97
```

```
****************************************************************************
  FLOW PROCESS FROM NODE    278.00 TO NODE    280.00 IS CODE =  41
----------------------------------------------------------------------------
  >>>>>COMPUTE PIPE-FLOW TRAVEL TIME THRU SUBAREA<<<<<
  >>>>>USING USER-SPECIFIED PIPESIZE (EXISTING ELEMENT)<<<<<
============================================================================
  ELEVATION DATA: UPSTREAM(FEET) =   485.00  DOWNSTREAM(FEET) =   482.00
  FLOW LENGTH(FEET) =   248.00   MANNING'S N =  0.013
  DEPTH OF FLOW IN  24.0 INCH PIPE IS   5.9 INCHES
  PIPE-FLOW VELOCITY(FEET/SEC.) =   5.20
  GIVEN PIPE DIAMETER(INCH) =  24.00    NUMBER OF PIPES =   1
  PIPE-FLOW(CFS) =      3.09
  PIPE TRAVEL TIME(MIN.) =   0.79    Tc(MIN.) =   8.76
  LONGEST FLOWPATH FROM NODE    276.00 TO NODE    280.00 =   515.00 FEET.

****************************************************************************
  FLOW PROCESS FROM NODE    280.00 TO NODE    280.00 IS CODE =  81
----------------------------------------------------------------------------
  >>>>>ADDITION OF SUBAREA TO MAINLINE PEAK FLOW<<<<<
============================================================================
   100 YEAR RAINFALL INTENSITY(INCH/HOUR) =  3.685
  *USER SPECIFIED(SUBAREA):
  SINGLE FAMILY DEVELOPMENT RUNOFF COEFFICIENT = .8000
  S.C.S. CURVE NUMBER (AMC II) =   0
  SUBAREA AREA(ACRES) =    0.80   SUBAREA RUNOFF(CFS) =    2.36
  TOTAL AREA(ACRES) =      1.80   TOTAL RUNOFF(CFS) =    5.45
  TC(MIN.) =   8.76

****************************************************************************
  FLOW PROCESS FROM NODE    280.00 TO NODE    280.00 IS CODE =   1
----------------------------------------------------------------------------
  >>>>>DESIGNATE INDEPENDENT STREAM FOR CONFLUENCE<<<<<
  >>>>>AND COMPUTE VARIOUS CONFLUENCED STREAM VALUES<<<<<
============================================================================
  TOTAL NUMBER OF STREAMS =  2
  CONFLUENCE VALUES USED FOR INDEPENDENT STREAM  2 ARE:
  TIME OF CONCENTRATION(MIN.) =   8.76
  RAINFALL INTENSITY(INCH/HR) =   3.69
  TOTAL STREAM AREA(ACRES) =     1.80
  PEAK FLOW RATE(CFS) AT CONFLUENCE =      5.45

  ** CONFLUENCE DATA **
  STREAM     RUNOFF      Tc      INTENSITY      AREA
  NUMBER      (CFS)    (MIN.)   (INCH/HOUR)    (ACRE)
      1        9.64     9.24        3.594          3.40
      2        5.45     8.76        3.685          1.80

  RAINFALL INTENSITY AND TIME OF CONCENTRATION RATIO
  CONFLUENCE FORMULA USED FOR  2 STREAMS.
```

```
  ** PEAK FLOW RATE TABLE **
  STREAM     RUNOFF      Tc      INTENSITY
  NUMBER      (CFS)    (MIN.)   (INCH/HOUR)
      1       14.85     8.76       3.685
      2       14.95     9.24       3.594

  COMPUTED CONFLUENCE ESTIMATES ARE AS FOLLOWS:
  PEAK FLOW RATE(CFS) =     14.95   Tc(MIN.) =    9.24
  TOTAL AREA(ACRES) =      5.20
  LONGEST FLOWPATH FROM NODE    270.00 TO NODE    280.00 =   882.00 FEET.

****************************************************************************
  FLOW PROCESS FROM NODE    280.00 TO NODE    281.00 IS CODE =  41
----------------------------------------------------------------------------
  >>>>>COMPUTE PIPE-FLOW TRAVEL TIME THRU SUBAREA<<<<<
  >>>>>USING USER-SPECIFIED PIPESIZE (EXISTING ELEMENT)<<<<<
============================================================================
  ELEVATION DATA: UPSTREAM(FEET) =   482.00  DOWNSTREAM(FEET) =   481.00
  FLOW LENGTH(FEET) =    34.00   MANNING'S N =  0.013
  DEPTH OF FLOW IN  30.0 INCH PIPE IS   9.6 INCHES
  PIPE-FLOW VELOCITY(FEET/SEC.) =  10.98
  GIVEN PIPE DIAMETER(INCH) =  30.00    NUMBER OF PIPES =   1
  PIPE-FLOW(CFS) =     14.95
  PIPE TRAVEL TIME(MIN.) =   0.05    Tc(MIN.) =   9.29
  LONGEST FLOWPATH FROM NODE    270.00 TO NODE    281.00 =   916.00 FEET.

****************************************************************************
  FLOW PROCESS FROM NODE    281.00 TO NODE    281.00 IS CODE =  81
----------------------------------------------------------------------------
  >>>>>ADDITION OF SUBAREA TO MAINLINE PEAK FLOW<<<<<
============================================================================
   100 YEAR RAINFALL INTENSITY(INCH/HOUR) =  3.584
  *USER SPECIFIED(SUBAREA):
  SINGLE FAMILY DEVELOPMENT RUNOFF COEFFICIENT = .7900
  S.C.S. CURVE NUMBER (AMC II) =   0
  SUBAREA AREA(ACRES) =    0.60   SUBAREA RUNOFF(CFS) =    1.70
  TOTAL AREA(ACRES) =      5.80   TOTAL RUNOFF(CFS) =   16.65
  TC(MIN.) =   9.29

****************************************************************************
  FLOW PROCESS FROM NODE    281.00 TO NODE    281.00 IS CODE =  81
----------------------------------------------------------------------------
  >>>>>ADDITION OF SUBAREA TO MAINLINE PEAK FLOW<<<<<
============================================================================
   100 YEAR RAINFALL INTENSITY(INCH/HOUR) =  3.584
  *USER SPECIFIED(SUBAREA):
  SINGLE FAMILY DEVELOPMENT RUNOFF COEFFICIENT = .8000
  S.C.S. CURVE NUMBER (AMC II) =   0
  SUBAREA AREA(ACRES) =    0.90   SUBAREA RUNOFF(CFS) =    2.58
```

```
  TOTAL AREA(ACRES) =      6.70   TOTAL RUNOFF(CFS) =   19.23
  TC(MIN.) =   9.29

****************************************************************************
  FLOW PROCESS FROM NODE    281.00 TO NODE    287.00 IS CODE =  41
----------------------------------------------------------------------------
  >>>>>COMPUTE PIPE-FLOW TRAVEL TIME THRU SUBAREA<<<<<
  >>>>>USING USER-SPECIFIED PIPESIZE (EXISTING ELEMENT)<<<<<
============================================================================
  ELEVATION DATA: UPSTREAM(FEET) =   481.00  DOWNSTREAM(FEET) =   470.00
  FLOW LENGTH(FEET) =   137.00   MANNING'S N =  0.013
  DEPTH OF FLOW IN  36.0 INCH PIPE IS   8.0 INCHES
  PIPE-FLOW VELOCITY(FEET/SEC.) =  16.58
  GIVEN PIPE DIAMETER(INCH) =  36.00    NUMBER OF PIPES =   1
  PIPE-FLOW(CFS) =     19.23
  PIPE TRAVEL TIME(MIN.) =   0.14    Tc(MIN.) =   9.43
  LONGEST FLOWPATH FROM NODE    270.00 TO NODE    287.00 =  1053.00 FEET.

****************************************************************************
  FLOW PROCESS FROM NODE    287.00 TO NODE    287.00 IS CODE =  81
----------------------------------------------------------------------------
  >>>>>ADDITION OF SUBAREA TO MAINLINE PEAK FLOW<<<<<
============================================================================
   100 YEAR RAINFALL INTENSITY(INCH/HOUR) =  3.558
  *USER SPECIFIED(SUBAREA):
  RURAL DEVELOPMENT RUNOFF COEFFICIENT = .4500
  S.C.S. CURVE NUMBER (AMC II) =   0
  SUBAREA AREA(ACRES) =    0.50   SUBAREA RUNOFF(CFS) =    0.80
  TOTAL AREA(ACRES) =      7.20   TOTAL RUNOFF(CFS) =   20.03
  TC(MIN.) =   9.43

****************************************************************************
  FLOW PROCESS FROM NODE    287.00 TO NODE    287.00 IS CODE =  81
----------------------------------------------------------------------------
  >>>>>ADDITION OF SUBAREA TO MAINLINE PEAK FLOW<<<<<
============================================================================
   100 YEAR RAINFALL INTENSITY(INCH/HOUR) =  3.558
  *USER SPECIFIED(SUBAREA):
  RURAL DEVELOPMENT RUNOFF COEFFICIENT = .4500
  S.C.S. CURVE NUMBER (AMC II) =   0
  SUBAREA AREA(ACRES) =    0.50   SUBAREA RUNOFF(CFS) =    0.80
  TOTAL AREA(ACRES) =      7.70   TOTAL RUNOFF(CFS) =   20.83
  TC(MIN.) =   9.43

****************************************************************************
  FLOW PROCESS FROM NODE    287.00 TO NODE    287.00 IS CODE =  11
----------------------------------------------------------------------------
  >>>>>CONFLUENCE MEMORY BANK # 1 WITH THE MAIN-STREAM MEMORY<<<<<
============================================================================
```

```
  ** MAIN STREAM CONFLUENCE DATA **
  STREAM     RUNOFF     Tc      INTENSITY     AREA
  NUMBER      (CFS)   (MIN.)   (INCH/HOUR)   (ACRE)
      1       20.83     9.43       3.558        7.70
  LONGEST FLOWPATH FROM NODE    270.00 TO NODE    287.00 =  1053.00 FEET.

  ** MEMORY BANK #  1 CONFLUENCE DATA **
  STREAM     RUNOFF     Tc      INTENSITY     AREA
  NUMBER      (CFS)   (MIN.)   (INCH/HOUR)   (ACRE)
      1       45.61    11.45       3.291       16.20
  LONGEST FLOWPATH FROM NODE    200.00 TO NODE    287.00 =  2435.00 FEET.

  ** PEAK FLOW RATE TABLE **
  STREAM    RUNOFF       Tc      INTENSITY
  NUMBER     (CFS)     (MIN.)   (INCH/HOUR)
      1      63.01       9.43        3.558
      2      64.87      11.45        3.291

  COMPUTED CONFLUENCE ESTIMATES ARE AS FOLLOWS:
  PEAK FLOW RATE(CFS) =     64.87   Tc(MIN.) =   11.45
  TOTAL AREA(ACRES) =     23.90

****************************************************************************
  FLOW PROCESS FROM NODE    287.00 TO NODE    287.00 IS CODE =  12
----------------------------------------------------------------------------
  >>>>>CLEAR MEMORY BANK # 1 <<<<<
============================================================================

+--------------------------------------------------------------------------+
| Q100 = 27.6CFS ; T_C = 19.3 MIN ; A = 23.9 AC                            |
|                                                                          |
|                                                                          |
+--------------------------------------------------------------------------+

****************************************************************************
  FLOW PROCESS FROM NODE    287.00 TO NODE    287.00 IS CODE =   7
----------------------------------------------------------------------------
  >>>>>USER SPECIFIED HYDROLOGY INFORMATION AT NODE<<<<<
============================================================================
  USER-SPECIFIED VALUES ARE AS FOLLOWS:
  TC(MIN) =  19.30   RAIN INTENSITY(INCH/HOUR) =  2.56
  TOTAL AREA(ACRES) =    23.90   TOTAL RUNOFF(CFS) =     27.60

****************************************************************************
  FLOW PROCESS FROM NODE    287.00 TO NODE    287.00 IS CODE =   1
----------------------------------------------------------------------------
  >>>>>DESIGNATE INDEPENDENT STREAM FOR CONFLUENCE<<<<<
============================================================================
  TOTAL NUMBER OF STREAMS =  2
  CONFLUENCE VALUES USED FOR INDEPENDENT STREAM  1 ARE:
```

```
  TIME OF CONCENTRATION(MIN.) =  19.30
  RAINFALL INTENSITY(INCH/HR) =   2.56
  TOTAL STREAM AREA(ACRES) =    23.90
  PEAK FLOW RATE(CFS) AT CONFLUENCE =     27.60

****************************************************************************
  FLOW PROCESS FROM NODE    282.00 TO NODE    283.00 IS CODE =  21
----------------------------------------------------------------------------
  >>>>>RATIONAL METHOD INITIAL SUBAREA ANALYSIS<<<<<
============================================================================
  *USER SPECIFIED(SUBAREA):
  COMMERCIAL DEVELOPMENT RUNOFF COEFFICIENT = .4500
  S.C.S. CURVE NUMBER (AMC II) =   0
  INITIAL SUBAREA FLOW-LENGTH(FEET) =    74.00
  UPSTREAM ELEVATION(FEET) =    492.00
  DOWNSTREAM ELEVATION(FEET) =    491.00
  ELEVATION DIFFERENCE(FEET) =      1.00
  URBAN SUBAREA OVERLAND TIME OF FLOW(MIN.) =    9.104
   100 YEAR RAINFALL INTENSITY(INCH/HOUR) =  3.620
  SUBAREA RUNOFF(CFS) =      0.16
  TOTAL AREA(ACRES) =      0.10   TOTAL RUNOFF(CFS) =      0.16

****************************************************************************
  FLOW PROCESS FROM NODE    283.00 TO NODE    284.00 IS CODE =  51
----------------------------------------------------------------------------
  >>>>>COMPUTE TRAPEZOIDAL CHANNEL FLOW<<<<<
  >>>>>TRAVELTIME THRU SUBAREA (EXISTING ELEMENT)<<<<<
============================================================================
  ELEVATION DATA: UPSTREAM(FEET) =    491.00  DOWNSTREAM(FEET) =    485.00
  CHANNEL LENGTH THRU SUBAREA(FEET) =  1195.00   CHANNEL SLOPE =  0.0050
  CHANNEL BASE(FEET) =    5.00   "Z" FACTOR =  10.000
  MANNING'S FACTOR = 0.015   MAXIMUM DEPTH(FEET) =  10.00
   100 YEAR RAINFALL INTENSITY(INCH/HOUR) =  2.787
  *USER SPECIFIED(SUBAREA):
  COMMERCIAL DEVELOPMENT RUNOFF COEFFICIENT = .4500
  S.C.S. CURVE NUMBER (AMC II) =   0
  TRAVEL TIME COMPUTED USING ESTIMATED FLOW(CFS) =      7.98
  TRAVEL TIME THRU SUBAREA BASED ON VELOCITY(FEET/SEC.) =   2.72
  AVERAGE FLOW DEPTH(FEET) =   0.35   TRAVEL TIME(MIN.) =   7.31
  Tc(MIN.) =  16.41
  SUBAREA AREA(ACRES) =    12.30       SUBAREA RUNOFF(CFS) =   15.43
  TOTAL AREA(ACRES) =     12.40         PEAK FLOW RATE(CFS) =      15.59

  END OF SUBAREA CHANNEL FLOW HYDRAULICS:
  DEPTH(FEET) =  0.48   FLOW VELOCITY(FEET/SEC.) =   3.28
  LONGEST FLOWPATH FROM NODE    282.00 TO NODE    284.00 =  1269.00 FEET.

****************************************************************************
  FLOW PROCESS FROM NODE    284.00 TO NODE    284.00 IS CODE =  81
----------------------------------------------------------------------------
```

```
  >>>>>ADDITION OF SUBAREA TO MAINLINE PEAK FLOW<<<<<
============================================================================
   100 YEAR RAINFALL INTENSITY(INCH/HOUR) =  2.787
  *USER SPECIFIED(SUBAREA):
  COMMERCIAL DEVELOPMENT RUNOFF COEFFICIENT = .4500
  S.C.S. CURVE NUMBER (AMC II) =   0
  SUBAREA AREA(ACRES) =    7.20   SUBAREA RUNOFF(CFS) =    9.03
  TOTAL AREA(ACRES) =     19.60   TOTAL RUNOFF(CFS) =   24.62
  TC(MIN.) =  16.41

****************************************************************************
  FLOW PROCESS FROM NODE    284.00 TO NODE    285.00 IS CODE =  51
----------------------------------------------------------------------------
  >>>>>COMPUTE TRAPEZOIDAL CHANNEL FLOW<<<<<
  >>>>>TRAVELTIME THRU SUBAREA (EXISTING ELEMENT)<<<<<
============================================================================
  ELEVATION DATA: UPSTREAM(FEET) =    485.00  DOWNSTREAM(FEET) =    480.00
  CHANNEL LENGTH THRU SUBAREA(FEET) =   671.00   CHANNEL SLOPE =  0.0075
  CHANNEL BASE(FEET) =    3.00   "Z" FACTOR =   3.000
  MANNING'S FACTOR = 0.015   MAXIMUM DEPTH(FEET) =  10.00
   100 YEAR RAINFALL INTENSITY(INCH/HOUR) =  2.636
  *USER SPECIFIED(SUBAREA):
  COMMERCIAL DEVELOPMENT RUNOFF COEFFICIENT = .4500
  S.C.S. CURVE NUMBER (AMC II) =   0
  TRAVEL TIME COMPUTED USING ESTIMATED FLOW(CFS) =     29.06
  TRAVEL TIME THRU SUBAREA BASED ON VELOCITY(FEET/SEC.) =   5.93
  AVERAGE FLOW DEPTH(FEET) =   0.87   TRAVEL TIME(MIN.) =   1.89
  Tc(MIN.) =  18.30
  SUBAREA AREA(ACRES) =     7.50       SUBAREA RUNOFF(CFS) =    8.90
  TOTAL AREA(ACRES) =     27.10         PEAK FLOW RATE(CFS) =      33.51

  END OF SUBAREA CHANNEL FLOW HYDRAULICS:
  DEPTH(FEET) =  0.94   FLOW VELOCITY(FEET/SEC.) =   6.17
  LONGEST FLOWPATH FROM NODE    282.00 TO NODE    285.00 =  1940.00 FEET.

****************************************************************************
  FLOW PROCESS FROM NODE    285.00 TO NODE    285.00 IS CODE =  81
----------------------------------------------------------------------------
  >>>>>ADDITION OF SUBAREA TO MAINLINE PEAK FLOW<<<<<
============================================================================
   100 YEAR RAINFALL INTENSITY(INCH/HOUR) =  2.636
  *USER SPECIFIED(SUBAREA):
  COMMERCIAL DEVELOPMENT RUNOFF COEFFICIENT = .4500
  S.C.S. CURVE NUMBER (AMC II) =   0
  SUBAREA AREA(ACRES) =    9.70   SUBAREA RUNOFF(CFS) =   11.51
  TOTAL AREA(ACRES) =     36.80   TOTAL RUNOFF(CFS) =   45.02
  TC(MIN.) =  18.30

****************************************************************************
  FLOW PROCESS FROM NODE    285.00 TO NODE    287.00 IS CODE =  41
```

```
----------------------------------------------------------------------------
  >>>>>COMPUTE PIPE-FLOW TRAVEL TIME THRU SUBAREA<<<<<
  >>>>>USING USER-SPECIFIED PIPESIZE (EXISTING ELEMENT)<<<<<
============================================================================
  ELEVATION DATA: UPSTREAM(FEET) =   474.00  DOWNSTREAM(FEET) =   470.00
  FLOW LENGTH(FEET) =   590.00   MANNING'S N =  0.013
  DEPTH OF FLOW IN  42.0 INCH PIPE IS  22.8 INCHES
  PIPE-FLOW VELOCITY(FEET/SEC.) =   8.46
  GIVEN PIPE DIAMETER(INCH) =  42.00    NUMBER OF PIPES =   1
  PIPE-FLOW(CFS) =     45.02
  PIPE TRAVEL TIME(MIN.) =   1.16    Tc(MIN.) =  19.46
  LONGEST FLOWPATH FROM NODE    282.00 TO NODE    287.00 =  2530.00 FEET.

****************************************************************************
  FLOW PROCESS FROM NODE    287.00 TO NODE    287.00 IS CODE =   1
----------------------------------------------------------------------------
  >>>>>DESIGNATE INDEPENDENT STREAM FOR CONFLUENCE<<<<<
  >>>>>AND COMPUTE VARIOUS CONFLUENCED STREAM VALUES<<<<<
============================================================================
  TOTAL NUMBER OF STREAMS =  2
  CONFLUENCE VALUES USED FOR INDEPENDENT STREAM  2 ARE:
  TIME OF CONCENTRATION(MIN.) =  19.46
  RAINFALL INTENSITY(INCH/HR) =   2.54
  TOTAL STREAM AREA(ACRES) =    36.80
  PEAK FLOW RATE(CFS) AT CONFLUENCE =     45.02

  ** CONFLUENCE DATA **
  STREAM     RUNOFF      Tc      INTENSITY      AREA
  NUMBER      (CFS)    (MIN.)   (INCH/HOUR)    (ACRE)
      1       27.60    19.30        2.556         23.90
      2       45.02    19.46        2.543         36.80

  RAINFALL INTENSITY AND TIME OF CONCENTRATION RATIO
  CONFLUENCE FORMULA USED FOR  2 STREAMS.

  ** PEAK FLOW RATE TABLE **
  STREAM     RUNOFF      Tc      INTENSITY
  NUMBER      (CFS)    (MIN.)   (INCH/HOUR)
      1       72.39    19.30       2.556
      2       72.48    19.46       2.543

  COMPUTED CONFLUENCE ESTIMATES ARE AS FOLLOWS:
  PEAK FLOW RATE(CFS) =     72.48   Tc(MIN.) =   19.46
  TOTAL AREA(ACRES) =     60.70
  LONGEST FLOWPATH FROM NODE    282.00 TO NODE    287.00 =  2530.00 FEET.

****************************************************************************
  FLOW PROCESS FROM NODE    287.00 TO NODE    290.00 IS CODE =  41
----------------------------------------------------------------------------
  >>>>>COMPUTE PIPE-FLOW TRAVEL TIME THRU SUBAREA<<<<<
```

```
  >>>>>USING USER-SPECIFIED PIPESIZE (EXISTING ELEMENT)<<<<<
============================================================================
  ELEVATION DATA: UPSTREAM(FEET) =   470.00  DOWNSTREAM(FEET) =   390.00
  FLOW LENGTH(FEET) =   160.00   MANNING'S N =  0.013
  DEPTH OF FLOW IN  54.0 INCH PIPE IS   8.6 INCHES
  PIPE-FLOW VELOCITY(FEET/SEC.) =  44.49
  GIVEN PIPE DIAMETER(INCH) =  54.00    NUMBER OF PIPES =   1
  PIPE-FLOW(CFS) =     72.48
  PIPE TRAVEL TIME(MIN.) =   0.06    Tc(MIN.) =  19.52
  LONGEST FLOWPATH FROM NODE    282.00 TO NODE    290.00 =  2690.00 FEET.
============================================================================
  END OF STUDY SUMMARY:
  TOTAL AREA(ACRES)     =     60.70  TC(MIN.) =     19.52
  PEAK FLOW RATE(CFS)   =     72.48
============================================================================
============================================================================
  END OF RATIONAL METHOD ANALYSIS
```

```
****************************************************************************

            RATIONAL METHOD HYDROLOGY COMPUTER PROGRAM PACKAGE
            Reference: SAN DIEGO COUNTY FLOOD CONTROL DISTRICT
                         2003,1985,1981 HYDROLOGY MANUAL
         (c) Copyright 1982-2014 Advanced Engineering Software (aes)
             Ver. 21.0 Release Date: 06/01/2014  License ID 1261

                           Analysis prepared by:

                          RICK ENGINEERING COMPANY
                              5620 Friars Road
                        San Diego, California 92110
                      619-291-0707   Fax 619-291-4165

 ************************* DESCRIPTION OF STUDY *************************
* J-15013C SOUTHWEST VILLAGE                                               *
* 100-YEAR, 6-HOUR STORM EVENT                                             *
* BASIN 1400 - BEYER BLVD POST PROJECT DETAINED                            *
 **************************************************************************

  FILE NAME: S1014D00.RAT
  TIME/DATE OF STUDY: 16:36 02/17/2022
----------------------------------------------------------------------------
  USER SPECIFIED HYDROLOGY AND HYDRAULIC MODEL INFORMATION:
----------------------------------------------------------------------------
  USER SPECIFIED STORM EVENT(YEAR) = 100.00
  SPECIFIED MINIMUM PIPE SIZE(INCH) =  18.00
  SPECIFIED PERCENT OF GRADIENTS(DECIMAL) TO USE FOR FRICTION SLOPE = 0.90
  RAINFALL-INTENSITY ADJUSTMENT FACTOR = 1.000
  *USER SPECIFIED:
  NUMBER OF [TIME,INTENSITY] DATA PAIRS =  9
   1)   5.000;  4.400
   2)  10.000;  3.450
   3)  15.000;  2.900
   4)  20.000;  2.500
   5)  25.000;  2.200
   6)  30.000;  2.000
   7)  40.000;  1.700
   8)  50.000;  1.500
   9)  60.000;  1.300
  SAN DIEGO HYDROLOGY MANUAL "C"-VALUES USED FOR RATIONAL METHOD
  NOTE: ONLY PEAK CONFLUENCE VALUES CONSIDERED
  *USER-DEFINED STREET-SECTIONS FOR COUPLED PIPEFLOW AND STREETFLOW MODEL*
     HALF-  CROWN TO   STREET-CROSSFALL:   CURB  GUTTER-GEOMETRIES:  MANNING
     WIDTH  CROSSFALL  IN-  / OUT-/PARK-  HEIGHT  WIDTH  LIP   HIKE  FACTOR
NO.   (FT)     (FT)    SIDE / SIDE/ WAY    (FT)    (FT)  (FT)  (FT)    (n)
===  =====  =========  ================   ======  ===== ====== ===== =======
  1   30.0     20.0    0.018/0.018/0.020   0.67    2.00 0.0313 0.167 0.0150
  2   20.0     15.0    0.020/0.020/0.020   0.50    1.50 0.0100 0.125 0.0180

  GLOBAL STREET FLOW-DEPTH CONSTRAINTS:
    1. Relative Flow-Depth = -0.10 FEET
       as (Maximum Allowable Street Flow Depth) - (Top-of-Curb)
    2. (Depth)*(Velocity) Constraint =  6.0 (FT*FT/S)
  *SIZE PIPE WITH A FLOW CAPACITY GREATER THAN
   OR EQUAL TO THE UPSTREAM TRIBUTARY PIPE.*
```

```
****************************************************************************
  FLOW PROCESS FROM NODE   1400.00 TO NODE   1401.00 IS CODE =  21
----------------------------------------------------------------------------
  >>>>>RATIONAL METHOD INITIAL SUBAREA ANALYSIS<<<<<
============================================================================
  *USER SPECIFIED(SUBAREA):
  RESIDENTIAL (1. DU/AC OR LESS) RUNOFF COEFFICIENT = .7000
  S.C.S. CURVE NUMBER (AMC II) =   0
  INITIAL SUBAREA FLOW-LENGTH(FEET) =   100.00
  UPSTREAM ELEVATION(FEET) =    100.00
  DOWNSTREAM ELEVATION(FEET) =     98.00
  ELEVATION DIFFERENCE(FEET) =      2.00
  URBAN SUBAREA OVERLAND TIME OF FLOW(MIN.) =    5.269
  WARNING: INITIAL SUBAREA FLOW PATH LENGTH IS GREATER THAN
           THE MAXIMUM OVERLAND FLOW LENGTH =    85.00
           (Reference: Table 3-1B of Hydrology Manual)
           THE MAXIMUM OVERLAND FLOW LENGTH IS USED IN Tc CALCULATION!
   100 YEAR RAINFALL INTENSITY(INCH/HOUR) =  4.349
  SUBAREA RUNOFF(CFS) =      0.91
  TOTAL AREA(ACRES) =      0.30   TOTAL RUNOFF(CFS) =      0.91

****************************************************************************
  FLOW PROCESS FROM NODE   1401.00 TO NODE   1402.00 IS CODE =  62
----------------------------------------------------------------------------
  >>>>>COMPUTE STREET FLOW TRAVEL TIME THRU SUBAREA<<<<<
  >>>>>(STREET TABLE SECTION #  2 USED)<<<<<
============================================================================
  UPSTREAM ELEVATION(FEET) =  100.00  DOWNSTREAM ELEVATION(FEET) =   83.00
  STREET LENGTH(FEET) =   850.00   CURB HEIGHT(INCHES) =  6.0
  STREET HALFWIDTH(FEET) = 20.00

  DISTANCE FROM CROWN TO CROSSFALL GRADEBREAK(FEET) =  15.00
  INSIDE STREET CROSSFALL(DECIMAL) =  0.020
  OUTSIDE STREET CROSSFALL(DECIMAL)  =  0.020

  SPECIFIED NUMBER OF HALFSTREETS CARRYING RUNOFF =  2
  STREET PARKWAY CROSSFALL(DECIMAL)  =  0.020
  Manning's FRICTION FACTOR for Streetflow Section(curb-to-curb) =   0.0180
  Manning's FRICTION FACTOR for Back-of-Walk Flow Section =   0.0200

    **TRAVEL TIME COMPUTED USING ESTIMATED FLOW(CFS) =      17.38
    STREETFLOW MODEL RESULTS USING ESTIMATED FLOW:
    STREET FLOW DEPTH(FEET) =  0.42
    HALFSTREET FLOOD WIDTH(FEET) =   15.69
    AVERAGE FLOW VELOCITY(FEET/SEC.) =    3.41
    PRODUCT OF DEPTH&VELOCITY(FT*FT/SEC.) =    1.43
  STREET FLOW TRAVEL TIME(MIN.) =   4.15   Tc(MIN.) =    9.42
   100 YEAR RAINFALL INTENSITY(INCH/HOUR) =  3.560
  *USER SPECIFIED(SUBAREA):
  RESIDENTIAL (1. DU/AC OR LESS) RUNOFF COEFFICIENT = .7000
  S.C.S. CURVE NUMBER (AMC II) =   0
  AREA-AVERAGE RUNOFF COEFFICIENT =  0.700
  SUBAREA AREA(ACRES) =   13.10      SUBAREA RUNOFF(CFS) =   32.64
  TOTAL AREA(ACRES) =       13.4        PEAK FLOW RATE(CFS) =      33.39

  END OF SUBAREA STREET FLOW HYDRAULICS:
  DEPTH(FEET) = 0.51   HALFSTREET FLOOD WIDTH(FEET) =  20.40
```

```
  FLOW VELOCITY(FEET/SEC.) =  4.02   DEPTH*VELOCITY(FT*FT/SEC.) =   2.04
  *NOTE: INITIAL SUBAREA NOMOGRAPH WITH SUBAREA PARAMETERS,
         AND L =  850.0 FT WITH ELEVATION-DROP =  17.0 FT, IS   39.9 CFS,
         WHICH EXCEEDS THE TOP-OF-CURB STREET CAPACITY AT NODE   1402.00
  LONGEST FLOWPATH FROM NODE   1400.00 TO NODE   1402.00 =     950.00 FEET.

****************************************************************************
  FLOW PROCESS FROM NODE   1402.00 TO NODE   1404.00 IS CODE =  51
----------------------------------------------------------------------------
  >>>>>COMPUTE TRAPEZOIDAL CHANNEL FLOW<<<<<
  >>>>>TRAVELTIME THRU SUBAREA (EXISTING ELEMENT)<<<<<
============================================================================
  ELEVATION DATA: UPSTREAM(FEET) =    100.00  DOWNSTREAM(FEET) =     52.50
  CHANNEL LENGTH THRU SUBAREA(FEET) =   950.00   CHANNEL SLOPE =  0.0500
  CHANNEL BASE(FEET) =   10.00   "Z" FACTOR =   4.000
  MANNING'S FACTOR = 0.035   MAXIMUM DEPTH(FEET) =  10.00
   100 YEAR RAINFALL INTENSITY(INCH/HOUR) =  3.225
  *USER SPECIFIED(SUBAREA):
  RESIDENTIAL (1. DU/AC OR LESS) RUNOFF COEFFICIENT = .4800
  S.C.S. CURVE NUMBER (AMC II) =   0
  TRAVEL TIME COMPUTED USING ESTIMATED FLOW(CFS) =      46.85
  TRAVEL TIME THRU SUBAREA BASED ON VELOCITY(FEET/SEC.) =   6.04
  AVERAGE FLOW DEPTH(FEET) =   0.62   TRAVEL TIME(MIN.) =   2.62
  Tc(MIN.) =   12.04
  SUBAREA AREA(ACRES) =    17.30       SUBAREA RUNOFF(CFS) =   26.78
  AREA-AVERAGE RUNOFF COEFFICIENT =  0.576
  TOTAL AREA(ACRES) =       30.7         PEAK FLOW RATE(CFS) =      57.04

  END OF SUBAREA CHANNEL FLOW HYDRAULICS:
  DEPTH(FEET) =  0.69   FLOW VELOCITY(FEET/SEC.) =   6.46
  LONGEST FLOWPATH FROM NODE   1400.00 TO NODE   1404.00 =    1900.00 FEET.

****************************************************************************
  FLOW PROCESS FROM NODE   1404.00 TO NODE   1404.00 IS CODE =  81
----------------------------------------------------------------------------
  >>>>>ADDITION OF SUBAREA TO MAINLINE PEAK FLOW<<<<<
============================================================================
   100 YEAR RAINFALL INTENSITY(INCH/HOUR) =  3.225
  *USER SPECIFIED(SUBAREA):
  RESIDENTIAL (1. DU/AC OR LESS) RUNOFF COEFFICIENT = .8000
  S.C.S. CURVE NUMBER (AMC II) =   0
  AREA-AVERAGE RUNOFF COEFFICIENT = 0.6085
  SUBAREA AREA(ACRES) =    5.20   SUBAREA RUNOFF(CFS) =   13.42
  TOTAL AREA(ACRES) =       35.9   TOTAL RUNOFF(CFS) =      70.45
  TC(MIN.) =   12.04

****************************************************************************
  FLOW PROCESS FROM NODE   1404.00 TO NODE   1405.00 IS CODE =  51
----------------------------------------------------------------------------
  >>>>>COMPUTE TRAPEZOIDAL CHANNEL FLOW<<<<<
  >>>>>TRAVELTIME THRU SUBAREA (EXISTING ELEMENT)<<<<<
============================================================================
  ELEVATION DATA: UPSTREAM(FEET) =    100.00  DOWNSTREAM(FEET) =     43.40
  CHANNEL LENGTH THRU SUBAREA(FEET) =  1415.00   CHANNEL SLOPE =  0.0400
  CHANNEL BASE(FEET) =   10.00   "Z" FACTOR =   4.000
  MANNING'S FACTOR = 0.035   MAXIMUM DEPTH(FEET) =  10.00
   100 YEAR RAINFALL INTENSITY(INCH/HOUR) =  2.859
  *USER SPECIFIED(SUBAREA):
```

```
  RESIDENTIAL (1. DU/AC OR LESS) RUNOFF COEFFICIENT = .4500
  S.C.S. CURVE NUMBER (AMC II) =   0
  TRAVEL TIME COMPUTED USING ESTIMATED FLOW(CFS) =      86.19
  TRAVEL TIME THRU SUBAREA BASED ON VELOCITY(FEET/SEC.) =   6.79
  AVERAGE FLOW DEPTH(FEET) =   0.93   TRAVEL TIME(MIN.) =   3.47
  Tc(MIN.) =   15.51
  SUBAREA AREA(ACRES) =    24.40       SUBAREA RUNOFF(CFS) =   31.39
  AREA-AVERAGE RUNOFF COEFFICIENT =  0.544
  TOTAL AREA(ACRES) =       60.3         PEAK FLOW RATE(CFS) =      93.84

  END OF SUBAREA CHANNEL FLOW HYDRAULICS:
  DEPTH(FEET) =  0.97   FLOW VELOCITY(FEET/SEC.) =   7.01
  LONGEST FLOWPATH FROM NODE   1400.00 TO NODE   1405.00 =    3315.00 FEET.

****************************************************************************
  FLOW PROCESS FROM NODE   1405.00 TO NODE   1405.00 IS CODE =   1
----------------------------------------------------------------------------
  >>>>>DESIGNATE INDEPENDENT STREAM FOR CONFLUENCE<<<<<
============================================================================
  TOTAL NUMBER OF STREAMS =  2
  CONFLUENCE VALUES USED FOR INDEPENDENT STREAM  1 ARE:
  TIME OF CONCENTRATION(MIN.) =   15.51
  RAINFALL INTENSITY(INCH/HR) =   2.86
  TOTAL STREAM AREA(ACRES) =    60.30
  PEAK FLOW RATE(CFS) AT CONFLUENCE =     93.84

****************************************************************************
  FLOW PROCESS FROM NODE    199.00 TO NODE    199.00 IS CODE =   7
----------------------------------------------------------------------------
  >>>>>USER SPECIFIED HYDROLOGY INFORMATION AT NODE<<<<<
============================================================================
  USER-SPECIFIED VALUES ARE AS FOLLOWS:
  TC(MIN) =  13.90   RAIN INTENSITY(INCH/HOUR) =  3.02
  TOTAL AREA(ACRES) =    16.50   TOTAL RUNOFF(CFS) =     18.40

****************************************************************************
  FLOW PROCESS FROM NODE    199.00 TO NODE   1405.00 IS CODE =  51
----------------------------------------------------------------------------
  >>>>>COMPUTE TRAPEZOIDAL CHANNEL FLOW<<<<<
  >>>>>TRAVELTIME THRU SUBAREA (EXISTING ELEMENT)<<<<<
============================================================================
  ELEVATION DATA: UPSTREAM(FEET) =    100.00  DOWNSTREAM(FEET) =     70.00
  CHANNEL LENGTH THRU SUBAREA(FEET) =   750.00   CHANNEL SLOPE =  0.0400
  CHANNEL BASE(FEET) =   10.00   "Z" FACTOR =   4.000
  MANNING'S FACTOR = 0.035   MAXIMUM DEPTH(FEET) =  10.00
   100 YEAR RAINFALL INTENSITY(INCH/HOUR) =  2.782
  *USER SPECIFIED(SUBAREA):
  RESIDENTIAL (1. DU/AC OR LESS) RUNOFF COEFFICIENT = .4500
  S.C.S. CURVE NUMBER (AMC II) =   0
  TRAVEL TIME COMPUTED USING ESTIMATED FLOW(CFS) =      30.03
  TRAVEL TIME THRU SUBAREA BASED ON VELOCITY(FEET/SEC.) =   4.85
  AVERAGE FLOW DEPTH(FEET) =   0.51   TRAVEL TIME(MIN.) =   2.58
  Tc(MIN.) =   16.48
  SUBAREA AREA(ACRES) =    18.60       SUBAREA RUNOFF(CFS) =   23.28
  AREA-AVERAGE RUNOFF COEFFICIENT =  0.412
  TOTAL AREA(ACRES) =       35.1         PEAK FLOW RATE(CFS) =      40.22

  END OF SUBAREA CHANNEL FLOW HYDRAULICS:
```

```
  DEPTH(FEET) =  0.61   FLOW VELOCITY(FEET/SEC.) =   5.35
  LONGEST FLOWPATH FROM NODE      0.00 TO NODE   1405.00 =     750.00 FEET.

****************************************************************************
  FLOW PROCESS FROM NODE   1405.00 TO NODE   1405.00 IS CODE =   1
----------------------------------------------------------------------------
  >>>>>DESIGNATE INDEPENDENT STREAM FOR CONFLUENCE<<<<<
  >>>>>AND COMPUTE VARIOUS CONFLUENCED STREAM VALUES<<<<<
============================================================================
  TOTAL NUMBER OF STREAMS =  2
  CONFLUENCE VALUES USED FOR INDEPENDENT STREAM  2 ARE:
  TIME OF CONCENTRATION(MIN.) =   16.48
  RAINFALL INTENSITY(INCH/HR) =   2.78
  TOTAL STREAM AREA(ACRES) =    35.10
  PEAK FLOW RATE(CFS) AT CONFLUENCE =     40.22

  ** CONFLUENCE DATA **
  STREAM     RUNOFF       Tc      INTENSITY      AREA
  NUMBER      (CFS)     (MIN.)   (INCH/HOUR)    (ACRE)
      1       93.84    15.51        2.859         60.30
      2       40.22    16.48        2.782         35.10

  RAINFALL INTENSITY AND TIME OF CONCENTRATION RATIO
  CONFLUENCE FORMULA USED FOR  2 STREAMS.

  ** PEAK FLOW RATE TABLE **
  STREAM     RUNOFF      Tc      INTENSITY
  NUMBER      (CFS)    (MIN.)   (INCH/HOUR)
      1      131.71    15.51       2.859
      2      131.53    16.48       2.782

  COMPUTED CONFLUENCE ESTIMATES ARE AS FOLLOWS:
  PEAK FLOW RATE(CFS) =     131.71   Tc(MIN.) =   15.51
  TOTAL AREA(ACRES) =       95.4
  LONGEST FLOWPATH FROM NODE   1400.00 TO NODE   1405.00 =    3315.00 FEET.

****************************************************************************
  FLOW PROCESS FROM NODE   1405.00 TO NODE   1410.00 IS CODE =  51
----------------------------------------------------------------------------
  >>>>>COMPUTE TRAPEZOIDAL CHANNEL FLOW<<<<<
  >>>>>TRAVELTIME THRU SUBAREA (EXISTING ELEMENT)<<<<<
============================================================================
  ELEVATION DATA: UPSTREAM(FEET) =    100.00  DOWNSTREAM(FEET) =     81.00
  CHANNEL LENGTH THRU SUBAREA(FEET) =   475.00   CHANNEL SLOPE =  0.0400
  CHANNEL BASE(FEET) =   10.00   "Z" FACTOR =   4.000
  MANNING'S FACTOR = 0.035   MAXIMUM DEPTH(FEET) =  10.00
   100 YEAR RAINFALL INTENSITY(INCH/HOUR) =  2.777
  *USER SPECIFIED(SUBAREA):
  RESIDENTIAL (1. DU/AC OR LESS) RUNOFF COEFFICIENT = .4500
  S.C.S. CURVE NUMBER (AMC II) =   0
  TRAVEL TIME COMPUTED USING ESTIMATED FLOW(CFS) =     134.89
  TRAVEL TIME THRU SUBAREA BASED ON VELOCITY(FEET/SEC.) =   7.79
  AVERAGE FLOW DEPTH(FEET) =   1.18   TRAVEL TIME(MIN.) =   1.02
  Tc(MIN.) =   16.53
  SUBAREA AREA(ACRES) =     5.10       SUBAREA RUNOFF(CFS) =    6.37
  AREA-AVERAGE RUNOFF COEFFICIENT =  0.493
  TOTAL AREA(ACRES) =      100.5         PEAK FLOW RATE(CFS) =     137.71
```

```
  END OF SUBAREA CHANNEL FLOW HYDRAULICS:
  DEPTH(FEET) =  1.19   FLOW VELOCITY(FEET/SEC.) =   7.81
  LONGEST FLOWPATH FROM NODE   1400.00 TO NODE   1410.00 =    3790.00 FEET.

****************************************************************************
  FLOW PROCESS FROM NODE   1410.00 TO NODE   1410.00 IS CODE =   1
----------------------------------------------------------------------------
  >>>>>DESIGNATE INDEPENDENT STREAM FOR CONFLUENCE<<<<<
============================================================================
  TOTAL NUMBER OF STREAMS =  2
  CONFLUENCE VALUES USED FOR INDEPENDENT STREAM  1 ARE:
  TIME OF CONCENTRATION(MIN.) =   16.53
  RAINFALL INTENSITY(INCH/HR) =   2.78
  TOTAL STREAM AREA(ACRES) =   100.50
  PEAK FLOW RATE(CFS) AT CONFLUENCE =    137.71

****************************************************************************
  FLOW PROCESS FROM NODE    299.00 TO NODE    299.00 IS CODE =   7
----------------------------------------------------------------------------
  >>>>>USER SPECIFIED HYDROLOGY INFORMATION AT NODE<<<<<
============================================================================
  USER-SPECIFIED VALUES ARE AS FOLLOWS:
  TC(MIN) =  19.50   RAIN INTENSITY(INCH/HOUR) =  2.54
  TOTAL AREA(ACRES) =    60.70   TOTAL RUNOFF(CFS) =     72.50

****************************************************************************
  FLOW PROCESS FROM NODE    299.00 TO NODE   1410.00 IS CODE =  51
----------------------------------------------------------------------------
  >>>>>COMPUTE TRAPEZOIDAL CHANNEL FLOW<<<<<
  >>>>>TRAVELTIME THRU SUBAREA (EXISTING ELEMENT)<<<<<
============================================================================
  ELEVATION DATA: UPSTREAM(FEET) =    100.00  DOWNSTREAM(FEET) =     58.00
  CHANNEL LENGTH THRU SUBAREA(FEET) =  1050.00   CHANNEL SLOPE =  0.0400
  CHANNEL BASE(FEET) =   10.00   "Z" FACTOR =   4.000
  MANNING'S FACTOR = 0.035   MAXIMUM DEPTH(FEET) =  10.00
   100 YEAR RAINFALL INTENSITY(INCH/HOUR) =  2.373
  *USER SPECIFIED(SUBAREA):
  RESIDENTIAL (1. DU/AC OR LESS) RUNOFF COEFFICIENT = .4500
  S.C.S. CURVE NUMBER (AMC II) =   0
  TRAVEL TIME COMPUTED USING ESTIMATED FLOW(CFS) =      82.22
  TRAVEL TIME THRU SUBAREA BASED ON VELOCITY(FEET/SEC.) =   6.69
  AVERAGE FLOW DEPTH(FEET) =   0.90   TRAVEL TIME(MIN.) =   2.62
  Tc(MIN.) =   22.12
  SUBAREA AREA(ACRES) =    18.20       SUBAREA RUNOFF(CFS) =   19.43
  AREA-AVERAGE RUNOFF COEFFICIENT =  0.466
  TOTAL AREA(ACRES) =       78.9         PEAK FLOW RATE(CFS) =      87.17

  END OF SUBAREA CHANNEL FLOW HYDRAULICS:
  DEPTH(FEET) =  0.93   FLOW VELOCITY(FEET/SEC.) =   6.85
  LONGEST FLOWPATH FROM NODE      0.00 TO NODE   1410.00 =    1800.00 FEET.

****************************************************************************
  FLOW PROCESS FROM NODE   1410.00 TO NODE   1410.00 IS CODE =   1
----------------------------------------------------------------------------
  >>>>>DESIGNATE INDEPENDENT STREAM FOR CONFLUENCE<<<<<
  >>>>>AND COMPUTE VARIOUS CONFLUENCED STREAM VALUES<<<<<
============================================================================
  TOTAL NUMBER OF STREAMS =  2
```

```
  CONFLUENCE VALUES USED FOR INDEPENDENT STREAM  2 ARE:
  TIME OF CONCENTRATION(MIN.) =   22.12
  RAINFALL INTENSITY(INCH/HR) =   2.37
  TOTAL STREAM AREA(ACRES) =    78.90
  PEAK FLOW RATE(CFS) AT CONFLUENCE =     87.17

  ** CONFLUENCE DATA **
  STREAM     RUNOFF       Tc      INTENSITY      AREA
  NUMBER      (CFS)     (MIN.)   (INCH/HOUR)    (ACRE)
      1      137.71    16.53        2.777        100.50
      2       87.17    22.12        2.373         78.90

  RAINFALL INTENSITY AND TIME OF CONCENTRATION RATIO
  CONFLUENCE FORMULA USED FOR  2 STREAMS.

  ** PEAK FLOW RATE TABLE **
  STREAM     RUNOFF      Tc      INTENSITY
  NUMBER      (CFS)    (MIN.)   (INCH/HOUR)
      1      202.86    16.53       2.777
      2      204.82    22.12       2.373

  COMPUTED CONFLUENCE ESTIMATES ARE AS FOLLOWS:
  PEAK FLOW RATE(CFS) =     204.82   Tc(MIN.) =   22.12
  TOTAL AREA(ACRES) =      179.4
  LONGEST FLOWPATH FROM NODE   1400.00 TO NODE   1410.00 =    3790.00 FEET.

****************************************************************************
  FLOW PROCESS FROM NODE   1410.00 TO NODE   1420.00 IS CODE =  51
----------------------------------------------------------------------------
  >>>>>COMPUTE TRAPEZOIDAL CHANNEL FLOW<<<<<
  >>>>>TRAVELTIME THRU SUBAREA (EXISTING ELEMENT)<<<<<
============================================================================
  ELEVATION DATA: UPSTREAM(FEET) =    100.00  DOWNSTREAM(FEET) =     60.00
  CHANNEL LENGTH THRU SUBAREA(FEET) =  1000.00   CHANNEL SLOPE =  0.0400
  CHANNEL BASE(FEET) =   10.00   "Z" FACTOR =   4.000
  MANNING'S FACTOR = 0.035   MAXIMUM DEPTH(FEET) =  10.00
   100 YEAR RAINFALL INTENSITY(INCH/HOUR) =  2.260
  *USER SPECIFIED(SUBAREA):
  RESIDENTIAL (1. DU/AC OR LESS) RUNOFF COEFFICIENT = .4500
  S.C.S. CURVE NUMBER (AMC II) =   0
  TRAVEL TIME COMPUTED USING ESTIMATED FLOW(CFS) =     212.96
  TRAVEL TIME THRU SUBAREA BASED ON VELOCITY(FEET/SEC.) =   8.89
  AVERAGE FLOW DEPTH(FEET) =   1.50   TRAVEL TIME(MIN.) =   1.88
  Tc(MIN.) =   23.99
  SUBAREA AREA(ACRES) =    16.00       SUBAREA RUNOFF(CFS) =   16.28
  AREA-AVERAGE RUNOFF COEFFICIENT =  0.479
  TOTAL AREA(ACRES) =      195.4         PEAK FLOW RATE(CFS) =     211.39

  END OF SUBAREA CHANNEL FLOW HYDRAULICS:
  DEPTH(FEET) =  1.49   FLOW VELOCITY(FEET/SEC.) =   8.87
  LONGEST FLOWPATH FROM NODE   1400.00 TO NODE   1420.00 =    4790.00 FEET.

****************************************************************************
  FLOW PROCESS FROM NODE   1420.00 TO NODE   1420.00 IS CODE =   1
----------------------------------------------------------------------------
  >>>>>DESIGNATE INDEPENDENT STREAM FOR CONFLUENCE<<<<<
============================================================================
  TOTAL NUMBER OF STREAMS =  2
```

```
  CONFLUENCE VALUES USED FOR INDEPENDENT STREAM  1 ARE:
  TIME OF CONCENTRATION(MIN.) =   23.99
  RAINFALL INTENSITY(INCH/HR) =   2.26
  TOTAL STREAM AREA(ACRES) =   195.40
  PEAK FLOW RATE(CFS) AT CONFLUENCE =    211.39

****************************************************************************
  FLOW PROCESS FROM NODE   1416.00 TO NODE   1417.00 IS CODE =  21
----------------------------------------------------------------------------
  >>>>>RATIONAL METHOD INITIAL SUBAREA ANALYSIS<<<<<
============================================================================
  *USER SPECIFIED(SUBAREA):
  RESIDENTIAL (1. DU/AC OR LESS) RUNOFF COEFFICIENT = .4500
  S.C.S. CURVE NUMBER (AMC II) =   0
  INITIAL SUBAREA FLOW-LENGTH(FEET) =   100.00
  UPSTREAM ELEVATION(FEET) =    100.00
  DOWNSTREAM ELEVATION(FEET) =     98.00
  ELEVATION DIFFERENCE(FEET) =      2.00
  URBAN SUBAREA OVERLAND TIME OF FLOW(MIN.) =    8.562
  WARNING: INITIAL SUBAREA FLOW PATH LENGTH IS GREATER THAN
           THE MAXIMUM OVERLAND FLOW LENGTH =    85.00
           (Reference: Table 3-1B of Hydrology Manual)
           THE MAXIMUM OVERLAND FLOW LENGTH IS USED IN Tc CALCULATION!
   100 YEAR RAINFALL INTENSITY(INCH/HOUR) =  3.723
  SUBAREA RUNOFF(CFS) =      0.17
  TOTAL AREA(ACRES) =      0.10   TOTAL RUNOFF(CFS) =      0.17

****************************************************************************
  FLOW PROCESS FROM NODE   1417.00 TO NODE   1418.00 IS CODE =  51
----------------------------------------------------------------------------
  >>>>>COMPUTE TRAPEZOIDAL CHANNEL FLOW<<<<<
  >>>>>TRAVELTIME THRU SUBAREA (EXISTING ELEMENT)<<<<<
============================================================================
  ELEVATION DATA: UPSTREAM(FEET) =    100.00  DOWNSTREAM(FEET) =     54.40
  CHANNEL LENGTH THRU SUBAREA(FEET) =   760.00   CHANNEL SLOPE =  0.0600
  CHANNEL BASE(FEET) =    2.00   "Z" FACTOR =   0.000
  MANNING'S FACTOR = 0.016   MAXIMUM DEPTH(FEET) =   2.00
   100 YEAR RAINFALL INTENSITY(INCH/HOUR) =  3.336
  *USER SPECIFIED(SUBAREA):
  RESIDENTIAL (1. DU/AC OR LESS) RUNOFF COEFFICIENT = .4500
  S.C.S. CURVE NUMBER (AMC II) =   0
  TRAVEL TIME COMPUTED USING ESTIMATED FLOW(CFS) =       1.22
  TRAVEL TIME THRU SUBAREA BASED ON VELOCITY(FEET/SEC.) =   5.12
  AVERAGE FLOW DEPTH(FEET) =   0.12   TRAVEL TIME(MIN.) =   2.47
  Tc(MIN.) =   11.03
  SUBAREA AREA(ACRES) =     1.40       SUBAREA RUNOFF(CFS) =    2.10
  AREA-AVERAGE RUNOFF COEFFICIENT =  0.450
  TOTAL AREA(ACRES) =        1.5         PEAK FLOW RATE(CFS) =       2.25

  END OF SUBAREA CHANNEL FLOW HYDRAULICS:
  DEPTH(FEET) =  0.18   FLOW VELOCITY(FEET/SEC.) =   6.31
  LONGEST FLOWPATH FROM NODE   1416.00 TO NODE   1418.00 =     860.00 FEET.

****************************************************************************
  FLOW PROCESS FROM NODE   1418.00 TO NODE   1420.00 IS CODE =  51
----------------------------------------------------------------------------
  >>>>>COMPUTE TRAPEZOIDAL CHANNEL FLOW<<<<<
  >>>>>TRAVELTIME THRU SUBAREA (EXISTING ELEMENT)<<<<<
```

```
============================================================================
  ELEVATION DATA: UPSTREAM(FEET) =    100.00  DOWNSTREAM(FEET) =     51.00
  CHANNEL LENGTH THRU SUBAREA(FEET) =   490.00   CHANNEL SLOPE =  0.1000
  CHANNEL BASE(FEET) =   10.00   "Z" FACTOR =   4.000
  MANNING'S FACTOR = 0.035   MAXIMUM DEPTH(FEET) =  10.00
   100 YEAR RAINFALL INTENSITY(INCH/HOUR) =  3.043
  *USER SPECIFIED(SUBAREA):
  RESIDENTIAL (1. DU/AC OR LESS) RUNOFF COEFFICIENT = .4500
  S.C.S. CURVE NUMBER (AMC II) =   0
  TRAVEL TIME COMPUTED USING ESTIMATED FLOW(CFS) =       3.76
  TRAVEL TIME THRU SUBAREA BASED ON VELOCITY(FEET/SEC.) =   3.06
  AVERAGE FLOW DEPTH(FEET) =   0.12   TRAVEL TIME(MIN.) =   2.67
  Tc(MIN.) =   13.70
  SUBAREA AREA(ACRES) =     2.20       SUBAREA RUNOFF(CFS) =    3.01
  AREA-AVERAGE RUNOFF COEFFICIENT =  0.450
  TOTAL AREA(ACRES) =        3.7         PEAK FLOW RATE(CFS) =       5.07

  END OF SUBAREA CHANNEL FLOW HYDRAULICS:
  DEPTH(FEET) =  0.14   FLOW VELOCITY(FEET/SEC.) =   3.42
  LONGEST FLOWPATH FROM NODE   1416.00 TO NODE   1420.00 =    1350.00 FEET.

****************************************************************************
  FLOW PROCESS FROM NODE   1420.00 TO NODE   1420.00 IS CODE =   1
----------------------------------------------------------------------------
  >>>>>DESIGNATE INDEPENDENT STREAM FOR CONFLUENCE<<<<<
  >>>>>AND COMPUTE VARIOUS CONFLUENCED STREAM VALUES<<<<<
============================================================================
  TOTAL NUMBER OF STREAMS =  2
  CONFLUENCE VALUES USED FOR INDEPENDENT STREAM  2 ARE:
  TIME OF CONCENTRATION(MIN.) =   13.70
  RAINFALL INTENSITY(INCH/HR) =   3.04
  TOTAL STREAM AREA(ACRES) =     3.70
  PEAK FLOW RATE(CFS) AT CONFLUENCE =      5.07

  ** CONFLUENCE DATA **
  STREAM     RUNOFF       Tc      INTENSITY      AREA
  NUMBER      (CFS)     (MIN.)   (INCH/HOUR)    (ACRE)
      1      211.39    23.99        2.260        195.40
      2        5.07    13.70        3.043          3.70

  RAINFALL INTENSITY AND TIME OF CONCENTRATION RATIO
  CONFLUENCE FORMULA USED FOR  2 STREAMS.

  ** PEAK FLOW RATE TABLE **
  STREAM     RUNOFF      Tc      INTENSITY
  NUMBER      (CFS)    (MIN.)   (INCH/HOUR)
      1      162.10    13.70       3.043
      2      215.15    23.99       2.260

  COMPUTED CONFLUENCE ESTIMATES ARE AS FOLLOWS:
  PEAK FLOW RATE(CFS) =     215.15   Tc(MIN.) =   23.99
  TOTAL AREA(ACRES) =      199.1
  LONGEST FLOWPATH FROM NODE   1400.00 TO NODE   1420.00 =    4790.00 FEET.

****************************************************************************
  FLOW PROCESS FROM NODE   1420.00 TO NODE   1430.00 IS CODE =  51
----------------------------------------------------------------------------
  >>>>>COMPUTE TRAPEZOIDAL CHANNEL FLOW<<<<<
```

```
  >>>>>TRAVELTIME THRU SUBAREA (EXISTING ELEMENT)<<<<<
============================================================================
  ELEVATION DATA: UPSTREAM(FEET) =    100.00  DOWNSTREAM(FEET) =      0.00
  CHANNEL LENGTH THRU SUBAREA(FEET) =  2500.00   CHANNEL SLOPE =  0.0400
  CHANNEL BASE(FEET) =   10.00   "Z" FACTOR =   4.000
  MANNING'S FACTOR = 0.035   MAXIMUM DEPTH(FEET) =  10.00
   100 YEAR RAINFALL INTENSITY(INCH/HOUR) =  2.060
  *USER SPECIFIED(SUBAREA):
  RESIDENTIAL (1. DU/AC OR LESS) RUNOFF COEFFICIENT = .4500
  S.C.S. CURVE NUMBER (AMC II) =   0
  TRAVEL TIME COMPUTED USING ESTIMATED FLOW(CFS) =     245.76
  TRAVEL TIME THRU SUBAREA BASED ON VELOCITY(FEET/SEC.) =   9.26
  AVERAGE FLOW DEPTH(FEET) =   1.61   TRAVEL TIME(MIN.) =   4.50
  Tc(MIN.) =   28.49
  SUBAREA AREA(ACRES) =    66.00       SUBAREA RUNOFF(CFS) =   61.19
  AREA-AVERAGE RUNOFF COEFFICIENT =  0.471
  TOTAL AREA(ACRES) =      265.1         PEAK FLOW RATE(CFS) =     257.30

  END OF SUBAREA CHANNEL FLOW HYDRAULICS:
  DEPTH(FEET) =  1.65   FLOW VELOCITY(FEET/SEC.) =   9.39
  LONGEST FLOWPATH FROM NODE   1400.00 TO NODE   1430.00 =    7290.00 FEET.

****************************************************************************
  FLOW PROCESS FROM NODE   1430.00 TO NODE   1430.00 IS CODE =   1
----------------------------------------------------------------------------
  >>>>>DESIGNATE INDEPENDENT STREAM FOR CONFLUENCE<<<<<
============================================================================
  TOTAL NUMBER OF STREAMS =  2
  CONFLUENCE VALUES USED FOR INDEPENDENT STREAM  1 ARE:
  TIME OF CONCENTRATION(MIN.) =   28.49
  RAINFALL INTENSITY(INCH/HR) =   2.06
  TOTAL STREAM AREA(ACRES) =   265.10
  PEAK FLOW RATE(CFS) AT CONFLUENCE =    257.30

****************************************************************************
  FLOW PROCESS FROM NODE   1427.00 TO NODE   1428.00 IS CODE =  21
----------------------------------------------------------------------------
  >>>>>RATIONAL METHOD INITIAL SUBAREA ANALYSIS<<<<<
============================================================================
  *USER SPECIFIED(SUBAREA):
  RESIDENTIAL (1. DU/AC OR LESS) RUNOFF COEFFICIENT = .4500
  S.C.S. CURVE NUMBER (AMC II) =   0
  INITIAL SUBAREA FLOW-LENGTH(FEET) =   100.00
  UPSTREAM ELEVATION(FEET) =    100.00
  DOWNSTREAM ELEVATION(FEET) =     98.00
  ELEVATION DIFFERENCE(FEET) =      2.00
  URBAN SUBAREA OVERLAND TIME OF FLOW(MIN.) =    8.562
  WARNING: INITIAL SUBAREA FLOW PATH LENGTH IS GREATER THAN
           THE MAXIMUM OVERLAND FLOW LENGTH =    85.00
           (Reference: Table 3-1B of Hydrology Manual)
           THE MAXIMUM OVERLAND FLOW LENGTH IS USED IN Tc CALCULATION!
   100 YEAR RAINFALL INTENSITY(INCH/HOUR) =  3.723
  SUBAREA RUNOFF(CFS) =      0.17
  TOTAL AREA(ACRES) =      0.10   TOTAL RUNOFF(CFS) =      0.17

****************************************************************************
  FLOW PROCESS FROM NODE   1428.00 TO NODE   1429.00 IS CODE =  51
----------------------------------------------------------------------------
```

```
  >>>>>COMPUTE TRAPEZOIDAL CHANNEL FLOW<<<<<
  >>>>>TRAVELTIME THRU SUBAREA (EXISTING ELEMENT)<<<<<
============================================================================
  ELEVATION DATA: UPSTREAM(FEET) =    200.00  DOWNSTREAM(FEET) =     56.00
  CHANNEL LENGTH THRU SUBAREA(FEET) =  2400.00   CHANNEL SLOPE =  0.0600
  CHANNEL BASE(FEET) =    2.00   "Z" FACTOR =   0.000
  MANNING'S FACTOR = 0.016   MAXIMUM DEPTH(FEET) =   4.00
   100 YEAR RAINFALL INTENSITY(INCH/HOUR) =  3.020
  *USER SPECIFIED(SUBAREA):
  RESIDENTIAL (1. DU/AC OR LESS) RUNOFF COEFFICIENT = .4500
  S.C.S. CURVE NUMBER (AMC II) =   0
  TRAVEL TIME COMPUTED USING ESTIMATED FLOW(CFS) =       3.47
  TRAVEL TIME THRU SUBAREA BASED ON VELOCITY(FEET/SEC.) =   7.49
  AVERAGE FLOW DEPTH(FEET) =   0.23   TRAVEL TIME(MIN.) =   5.34
  Tc(MIN.) =   13.91
  SUBAREA AREA(ACRES) =     4.80       SUBAREA RUNOFF(CFS) =    6.52
  AREA-AVERAGE RUNOFF COEFFICIENT =  0.450
  TOTAL AREA(ACRES) =        4.9         PEAK FLOW RATE(CFS) =       6.66

  END OF SUBAREA CHANNEL FLOW HYDRAULICS:
  DEPTH(FEET) =  0.36   FLOW VELOCITY(FEET/SEC.) =   9.36
  LONGEST FLOWPATH FROM NODE   1427.00 TO NODE   1429.00 =    2500.00 FEET.

****************************************************************************
  FLOW PROCESS FROM NODE   1429.00 TO NODE   1430.00 IS CODE =  31
----------------------------------------------------------------------------
  >>>>>COMPUTE PIPE-FLOW TRAVEL TIME THRU SUBAREA<<<<<
  >>>>>USING COMPUTER-ESTIMATED PIPESIZE (NON-PRESSURE FLOW)<<<<<
============================================================================
  ELEVATION DATA: UPSTREAM(FEET) =   100.00  DOWNSTREAM(FEET) =    96.25
  FLOW LENGTH(FEET) =    75.00   MANNING'S N =  0.013
  ESTIMATED PIPE DIAMETER(INCH) INCREASED TO 18.000
  DEPTH OF FLOW IN  18.0 INCH PIPE IS   6.7 INCHES
  PIPE-FLOW VELOCITY(FEET/SEC.) =  11.03
  ESTIMATED PIPE DIAMETER(INCH) =  18.00    NUMBER OF PIPES =   1
  PIPE-FLOW(CFS) =       6.66
  PIPE TRAVEL TIME(MIN.) =   0.11    Tc(MIN.) =   14.02
  LONGEST FLOWPATH FROM NODE   1427.00 TO NODE   1430.00 =    2575.00 FEET.

****************************************************************************
  FLOW PROCESS FROM NODE   1430.00 TO NODE   1430.00 IS CODE =   1
----------------------------------------------------------------------------
  >>>>>DESIGNATE INDEPENDENT STREAM FOR CONFLUENCE<<<<<
  >>>>>AND COMPUTE VARIOUS CONFLUENCED STREAM VALUES<<<<<
============================================================================
  TOTAL NUMBER OF STREAMS =  2
  CONFLUENCE VALUES USED FOR INDEPENDENT STREAM  2 ARE:
  TIME OF CONCENTRATION(MIN.) =   14.02
  RAINFALL INTENSITY(INCH/HR) =   3.01
  TOTAL STREAM AREA(ACRES) =     4.90
  PEAK FLOW RATE(CFS) AT CONFLUENCE =      6.66

  ** CONFLUENCE DATA **
  STREAM     RUNOFF       Tc      INTENSITY      AREA
  NUMBER      (CFS)     (MIN.)   (INCH/HOUR)    (ACRE)
      1      257.30    28.49        2.060       265.10
      2        6.66    14.02        3.008         4.90
```

```
  RAINFALL INTENSITY AND TIME OF CONCENTRATION RATIO
  CONFLUENCE FORMULA USED FOR  2 STREAMS.

  ** PEAK FLOW RATE TABLE **
  STREAM     RUNOFF      Tc      INTENSITY
  NUMBER      (CFS)    (MIN.)   (INCH/HOUR)
      1      182.91    14.02       3.008
      2      261.86    28.49       2.060

  COMPUTED CONFLUENCE ESTIMATES ARE AS FOLLOWS:
  PEAK FLOW RATE(CFS) =     261.86   Tc(MIN.) =   28.49
  TOTAL AREA(ACRES) =      270.0
  LONGEST FLOWPATH FROM NODE   1400.00 TO NODE   1430.00 =    7290.00 FEET.

****************************************************************************
  FLOW PROCESS FROM NODE   1430.00 TO NODE   1498.00 IS CODE =  31
----------------------------------------------------------------------------
  >>>>>COMPUTE PIPE-FLOW TRAVEL TIME THRU SUBAREA<<<<<
  >>>>>USING COMPUTER-ESTIMATED PIPESIZE (NON-PRESSURE FLOW)<<<<<
============================================================================
  ELEVATION DATA: UPSTREAM(FEET) =   100.00  DOWNSTREAM(FEET) =    98.70
  FLOW LENGTH(FEET) =    65.00   MANNING'S N =  0.013
  DEPTH OF FLOW IN  54.0 INCH PIPE IS  43.8 INCHES
  PIPE-FLOW VELOCITY(FEET/SEC.) =  18.96
  ESTIMATED PIPE DIAMETER(INCH) =  54.00    NUMBER OF PIPES =   1
  PIPE-FLOW(CFS) =     261.86
  PIPE TRAVEL TIME(MIN.) =   0.06    Tc(MIN.) =   28.55
  LONGEST FLOWPATH FROM NODE   1400.00 TO NODE   1498.00 =    7355.00 FEET.

****************************************************************************
  FLOW PROCESS FROM NODE   1498.00 TO NODE   1498.00 IS CODE =   1
----------------------------------------------------------------------------
  >>>>>DESIGNATE INDEPENDENT STREAM FOR CONFLUENCE<<<<<
============================================================================
  TOTAL NUMBER OF STREAMS =  2
  CONFLUENCE VALUES USED FOR INDEPENDENT STREAM  1 ARE:
  TIME OF CONCENTRATION(MIN.) =   28.55
  RAINFALL INTENSITY(INCH/HR) =   2.06
  TOTAL STREAM AREA(ACRES) =   270.00
  PEAK FLOW RATE(CFS) AT CONFLUENCE =    261.86

****************************************************************************
  FLOW PROCESS FROM NODE   1450.00 TO NODE   1451.00 IS CODE =  21
----------------------------------------------------------------------------
  >>>>>RATIONAL METHOD INITIAL SUBAREA ANALYSIS<<<<<
============================================================================
  *USER SPECIFIED(SUBAREA):
  RESIDENTIAL (1. DU/AC OR LESS) RUNOFF COEFFICIENT = .4500
  S.C.S. CURVE NUMBER (AMC II) =   0
  INITIAL SUBAREA FLOW-LENGTH(FEET) =   100.00
  UPSTREAM ELEVATION(FEET) =    100.00
  DOWNSTREAM ELEVATION(FEET) =     98.00
  ELEVATION DIFFERENCE(FEET) =      2.00
  URBAN SUBAREA OVERLAND TIME OF FLOW(MIN.) =    8.562
  WARNING: INITIAL SUBAREA FLOW PATH LENGTH IS GREATER THAN
           THE MAXIMUM OVERLAND FLOW LENGTH =    85.00
           (Reference: Table 3-1B of Hydrology Manual)
           THE MAXIMUM OVERLAND FLOW LENGTH IS USED IN Tc CALCULATION!
```

```
   100 YEAR RAINFALL INTENSITY(INCH/HOUR) =  3.723
  SUBAREA RUNOFF(CFS) =      0.17
  TOTAL AREA(ACRES) =      0.10   TOTAL RUNOFF(CFS) =      0.17

****************************************************************************
  FLOW PROCESS FROM NODE   1451.00 TO NODE   1453.00 IS CODE =  51
----------------------------------------------------------------------------
  >>>>>COMPUTE TRAPEZOIDAL CHANNEL FLOW<<<<<
  >>>>>TRAVELTIME THRU SUBAREA (EXISTING ELEMENT)<<<<<
============================================================================
  ELEVATION DATA: UPSTREAM(FEET) =    100.00  DOWNSTREAM(FEET) =     43.00
  CHANNEL LENGTH THRU SUBAREA(FEET) =   950.00   CHANNEL SLOPE =  0.0600
  CHANNEL BASE(FEET) =    2.00   "Z" FACTOR =   0.000
  MANNING'S FACTOR = 0.016   MAXIMUM DEPTH(FEET) =   4.00
   100 YEAR RAINFALL INTENSITY(INCH/HOUR) =  3.319
  *USER SPECIFIED(SUBAREA):
  RESIDENTIAL (1. DU/AC OR LESS) RUNOFF COEFFICIENT = .4500
  S.C.S. CURVE NUMBER (AMC II) =   0
  TRAVEL TIME COMPUTED USING ESTIMATED FLOW(CFS) =       1.97
  TRAVEL TIME THRU SUBAREA BASED ON VELOCITY(FEET/SEC.) =   6.03
  AVERAGE FLOW DEPTH(FEET) =   0.16   TRAVEL TIME(MIN.) =   2.63
  Tc(MIN.) =   11.19
  SUBAREA AREA(ACRES) =     2.40       SUBAREA RUNOFF(CFS) =    3.58
  AREA-AVERAGE RUNOFF COEFFICIENT =  0.450
  TOTAL AREA(ACRES) =        2.5         PEAK FLOW RATE(CFS) =       3.73

  END OF SUBAREA CHANNEL FLOW HYDRAULICS:
  DEPTH(FEET) =  0.24   FLOW VELOCITY(FEET/SEC.) =   7.74
  LONGEST FLOWPATH FROM NODE   1450.00 TO NODE   1453.00 =    1050.00 FEET.

****************************************************************************
  FLOW PROCESS FROM NODE   1453.00 TO NODE   1453.00 IS CODE =  81
----------------------------------------------------------------------------
  >>>>>ADDITION OF SUBAREA TO MAINLINE PEAK FLOW<<<<<
============================================================================
   100 YEAR RAINFALL INTENSITY(INCH/HOUR) =  3.319
  *USER SPECIFIED(SUBAREA):
  RESIDENTIAL (1. DU/AC OR LESS) RUNOFF COEFFICIENT = .4500
  S.C.S. CURVE NUMBER (AMC II) =   0
  AREA-AVERAGE RUNOFF COEFFICIENT = 0.4500
  SUBAREA AREA(ACRES) =    2.30   SUBAREA RUNOFF(CFS) =    3.44
  TOTAL AREA(ACRES) =        4.8   TOTAL RUNOFF(CFS) =       7.17
  TC(MIN.) =   11.19

****************************************************************************
  FLOW PROCESS FROM NODE   1453.00 TO NODE   1454.00 IS CODE =  51
----------------------------------------------------------------------------
  >>>>>COMPUTE TRAPEZOIDAL CHANNEL FLOW<<<<<
  >>>>>TRAVELTIME THRU SUBAREA (EXISTING ELEMENT)<<<<<
============================================================================
  ELEVATION DATA: UPSTREAM(FEET) =    100.00  DOWNSTREAM(FEET) =     25.00
  CHANNEL LENGTH THRU SUBAREA(FEET) =  1250.00   CHANNEL SLOPE =  0.0600
  CHANNEL BASE(FEET) =    2.00   "Z" FACTOR =   0.000
  MANNING'S FACTOR = 0.016   MAXIMUM DEPTH(FEET) =   4.00
   100 YEAR RAINFALL INTENSITY(INCH/HOUR) =  3.101
  *USER SPECIFIED(SUBAREA):
  RESIDENTIAL (1. DU/AC OR LESS) RUNOFF COEFFICIENT = .4500
  S.C.S. CURVE NUMBER (AMC II) =   0
```

```
  TRAVEL TIME COMPUTED USING ESTIMATED FLOW(CFS) =       9.54
  TRAVEL TIME THRU SUBAREA BASED ON VELOCITY(FEET/SEC.) =  10.49
  AVERAGE FLOW DEPTH(FEET) =   0.45   TRAVEL TIME(MIN.) =   1.99
  Tc(MIN.) =   13.17
  SUBAREA AREA(ACRES) =     3.40       SUBAREA RUNOFF(CFS) =    4.74
  AREA-AVERAGE RUNOFF COEFFICIENT =  0.450
  TOTAL AREA(ACRES) =        8.2         PEAK FLOW RATE(CFS) =      11.44

  END OF SUBAREA CHANNEL FLOW HYDRAULICS:
  DEPTH(FEET) =  0.52   FLOW VELOCITY(FEET/SEC.) =  11.09
  LONGEST FLOWPATH FROM NODE   1450.00 TO NODE   1454.00 =    2300.00 FEET.

****************************************************************************
  FLOW PROCESS FROM NODE   1454.00 TO NODE   1454.00 IS CODE =  81
----------------------------------------------------------------------------
  >>>>>ADDITION OF SUBAREA TO MAINLINE PEAK FLOW<<<<<
============================================================================
   100 YEAR RAINFALL INTENSITY(INCH/HOUR) =  3.101
  *USER SPECIFIED(SUBAREA):
  RESIDENTIAL (1. DU/AC OR LESS) RUNOFF COEFFICIENT = .4500
  S.C.S. CURVE NUMBER (AMC II) =   0
  AREA-AVERAGE RUNOFF COEFFICIENT = 0.4500
  SUBAREA AREA(ACRES) =    4.90   SUBAREA RUNOFF(CFS) =    6.84
  TOTAL AREA(ACRES) =       13.1   TOTAL RUNOFF(CFS) =      18.28
  TC(MIN.) =   13.17

****************************************************************************
  FLOW PROCESS FROM NODE   1454.00 TO NODE   1455.00 IS CODE =  51
----------------------------------------------------------------------------
  >>>>>COMPUTE TRAPEZOIDAL CHANNEL FLOW<<<<<
  >>>>>TRAVELTIME THRU SUBAREA (EXISTING ELEMENT)<<<<<
============================================================================
  ELEVATION DATA: UPSTREAM(FEET) =    100.00  DOWNSTREAM(FEET) =     37.00
  CHANNEL LENGTH THRU SUBAREA(FEET) =  1050.00   CHANNEL SLOPE =  0.0600
  CHANNEL BASE(FEET) =    2.00   "Z" FACTOR =   0.000
  MANNING'S FACTOR = 0.016   MAXIMUM DEPTH(FEET) =   4.00
   100 YEAR RAINFALL INTENSITY(INCH/HOUR) =  2.952
  *USER SPECIFIED(SUBAREA):
  RESIDENTIAL (1. DU/AC OR LESS) RUNOFF COEFFICIENT = .4500
  S.C.S. CURVE NUMBER (AMC II) =   0
  TRAVEL TIME COMPUTED USING ESTIMATED FLOW(CFS) =      19.48
  TRAVEL TIME THRU SUBAREA BASED ON VELOCITY(FEET/SEC.) =  12.94
  AVERAGE FLOW DEPTH(FEET) =   0.75   TRAVEL TIME(MIN.) =   1.35
  Tc(MIN.) =   14.53
  SUBAREA AREA(ACRES) =     1.80       SUBAREA RUNOFF(CFS) =    2.39
  AREA-AVERAGE RUNOFF COEFFICIENT =  0.450
  TOTAL AREA(ACRES) =       14.9         PEAK FLOW RATE(CFS) =      19.79

  END OF SUBAREA CHANNEL FLOW HYDRAULICS:
  DEPTH(FEET) =  0.76   FLOW VELOCITY(FEET/SEC.) =  13.02
  LONGEST FLOWPATH FROM NODE   1450.00 TO NODE   1455.00 =    3350.00 FEET.

****************************************************************************
  FLOW PROCESS FROM NODE   1455.00 TO NODE   1455.00 IS CODE =  81
----------------------------------------------------------------------------
  >>>>>ADDITION OF SUBAREA TO MAINLINE PEAK FLOW<<<<<
============================================================================
   100 YEAR RAINFALL INTENSITY(INCH/HOUR) =  2.952
```

```
  *USER SPECIFIED(SUBAREA):
  RESIDENTIAL (1. DU/AC OR LESS) RUNOFF COEFFICIENT = .4500
  S.C.S. CURVE NUMBER (AMC II) =   0
  AREA-AVERAGE RUNOFF COEFFICIENT = 0.4500
  SUBAREA AREA(ACRES) =    0.20   SUBAREA RUNOFF(CFS) =    0.27
  TOTAL AREA(ACRES) =       15.1   TOTAL RUNOFF(CFS) =      20.06
  TC(MIN.) =   14.53

****************************************************************************
  FLOW PROCESS FROM NODE   1455.00 TO NODE   1498.00 IS CODE =  31
----------------------------------------------------------------------------
  >>>>>COMPUTE PIPE-FLOW TRAVEL TIME THRU SUBAREA<<<<<
  >>>>>USING COMPUTER-ESTIMATED PIPESIZE (NON-PRESSURE FLOW)<<<<<
============================================================================
  ELEVATION DATA: UPSTREAM(FEET) =   100.00  DOWNSTREAM(FEET) =    71.50
  FLOW LENGTH(FEET) =    60.00   MANNING'S N =  0.013
  ESTIMATED PIPE DIAMETER(INCH) INCREASED TO 18.000
  DEPTH OF FLOW IN  18.0 INCH PIPE IS   6.7 INCHES
  PIPE-FLOW VELOCITY(FEET/SEC.) =  33.78
  ESTIMATED PIPE DIAMETER(INCH) =  18.00    NUMBER OF PIPES =   1
  PIPE-FLOW(CFS) =      20.06
  PIPE TRAVEL TIME(MIN.) =   0.03    Tc(MIN.) =   14.56
  LONGEST FLOWPATH FROM NODE   1450.00 TO NODE   1498.00 =    3410.00 FEET.

****************************************************************************
  FLOW PROCESS FROM NODE   1498.00 TO NODE   1498.00 IS CODE =   1
----------------------------------------------------------------------------
  >>>>>DESIGNATE INDEPENDENT STREAM FOR CONFLUENCE<<<<<
  >>>>>AND COMPUTE VARIOUS CONFLUENCED STREAM VALUES<<<<<
============================================================================
  TOTAL NUMBER OF STREAMS =  2
  CONFLUENCE VALUES USED FOR INDEPENDENT STREAM  2 ARE:
  TIME OF CONCENTRATION(MIN.) =   14.56
  RAINFALL INTENSITY(INCH/HR) =   2.95
  TOTAL STREAM AREA(ACRES) =    15.10
  PEAK FLOW RATE(CFS) AT CONFLUENCE =     20.06

  ** CONFLUENCE DATA **
  STREAM     RUNOFF       Tc      INTENSITY      AREA
  NUMBER      (CFS)     (MIN.)   (INCH/HOUR)    (ACRE)
      1      261.86    28.55        2.058        270.00
      2       20.06    14.56        2.949         15.10

  RAINFALL INTENSITY AND TIME OF CONCENTRATION RATIO
  CONFLUENCE FORMULA USED FOR  2 STREAMS.

  ** PEAK FLOW RATE TABLE **
  STREAM     RUNOFF      Tc      INTENSITY
  NUMBER      (CFS)    (MIN.)   (INCH/HOUR)
      1      202.82    14.56       2.949
      2      275.86    28.55       2.058

  COMPUTED CONFLUENCE ESTIMATES ARE AS FOLLOWS:
  PEAK FLOW RATE(CFS) =     275.86   Tc(MIN.) =   28.55
  TOTAL AREA(ACRES) =      285.1
  LONGEST FLOWPATH FROM NODE   1400.00 TO NODE   1498.00 =    7355.00 FEET.

****************************************************************************
```

```
  FLOW PROCESS FROM NODE   1498.00 TO NODE   1499.00 IS CODE =  31
----------------------------------------------------------------------------
  >>>>>COMPUTE PIPE-FLOW TRAVEL TIME THRU SUBAREA<<<<<
  >>>>>USING COMPUTER-ESTIMATED PIPESIZE (NON-PRESSURE FLOW)<<<<<
============================================================================
  ELEVATION DATA: UPSTREAM(FEET) =   100.00  DOWNSTREAM(FEET) =    71.50
  FLOW LENGTH(FEET) =   570.00   MANNING'S N =  0.013
  DEPTH OF FLOW IN  48.0 INCH PIPE IS  35.7 INCHES
  PIPE-FLOW VELOCITY(FEET/SEC.) =  27.52
  ESTIMATED PIPE DIAMETER(INCH) =  48.00    NUMBER OF PIPES =   1
  PIPE-FLOW(CFS) =     275.86
  PIPE TRAVEL TIME(MIN.) =   0.35    Tc(MIN.) =   28.89
  LONGEST FLOWPATH FROM NODE   1400.00 TO NODE   1499.00 =    7925.00 FEET.

****************************************************************************
  FLOW PROCESS FROM NODE   1499.00 TO NODE   1499.00 IS CODE =  10
----------------------------------------------------------------------------
  >>>>>MAIN-STREAM MEMORY COPIED ONTO MEMORY BANK # 1 <<<<<
============================================================================

****************************************************************************
  FLOW PROCESS FROM NODE   1470.00 TO NODE   1471.00 IS CODE =  22
----------------------------------------------------------------------------
  >>>>>RATIONAL METHOD INITIAL SUBAREA ANALYSIS<<<<<
============================================================================
  *USER SPECIFIED(SUBAREA):
  RESIDENTIAL (1. DU/AC OR LESS) RUNOFF COEFFICIENT = .8800
  S.C.S. CURVE NUMBER (AMC II) =   0
  USER SPECIFIED Tc(MIN.) =    5.000
   100 YEAR RAINFALL INTENSITY(INCH/HOUR) =  4.400
  SUBAREA RUNOFF(CFS) =      0.39
  TOTAL AREA(ACRES) =      0.10   TOTAL RUNOFF(CFS) =      0.39

****************************************************************************
  FLOW PROCESS FROM NODE   1471.00 TO NODE   1472.00 IS CODE =  62
----------------------------------------------------------------------------
  >>>>>COMPUTE STREET FLOW TRAVEL TIME THRU SUBAREA<<<<<
  >>>>>(STREET TABLE SECTION #  2 USED)<<<<<
============================================================================
  UPSTREAM ELEVATION(FEET) =  100.00  DOWNSTREAM ELEVATION(FEET) =   84.50
  STREET LENGTH(FEET) =   775.00   CURB HEIGHT(INCHES) =  6.0
  STREET HALFWIDTH(FEET) = 20.00

  DISTANCE FROM CROWN TO CROSSFALL GRADEBREAK(FEET) =  15.00
  INSIDE STREET CROSSFALL(DECIMAL) =  0.020
  OUTSIDE STREET CROSSFALL(DECIMAL)  =  0.020

  SPECIFIED NUMBER OF HALFSTREETS CARRYING RUNOFF =  1
  STREET PARKWAY CROSSFALL(DECIMAL)  =  0.020
  Manning's FRICTION FACTOR for Streetflow Section(curb-to-curb) =   0.0180
  Manning's FRICTION FACTOR for Back-of-Walk Flow Section =   0.0200

    **TRAVEL TIME COMPUTED USING ESTIMATED FLOW(CFS) =       1.58
    STREETFLOW MODEL RESULTS USING ESTIMATED FLOW:
    STREET FLOW DEPTH(FEET) =  0.26
    HALFSTREET FLOOD WIDTH(FEET) =    7.78
    AVERAGE FLOW VELOCITY(FEET/SEC.) =    2.29
    PRODUCT OF DEPTH&VELOCITY(FT*FT/SEC.) =    0.60
```

```
  STREET FLOW TRAVEL TIME(MIN.) =   5.64   Tc(MIN.) =   10.64
   100 YEAR RAINFALL INTENSITY(INCH/HOUR) =  3.379
  *USER SPECIFIED(SUBAREA):
  RESIDENTIAL (1. DU/AC OR LESS) RUNOFF COEFFICIENT = .8800
  S.C.S. CURVE NUMBER (AMC II) =   0
  AREA-AVERAGE RUNOFF COEFFICIENT =  0.880
  SUBAREA AREA(ACRES) =    0.80      SUBAREA RUNOFF(CFS) =    2.38
  TOTAL AREA(ACRES) =        0.9        PEAK FLOW RATE(CFS) =       2.68

  END OF SUBAREA STREET FLOW HYDRAULICS:
  DEPTH(FEET) = 0.30   HALFSTREET FLOOD WIDTH(FEET) =   9.78
  FLOW VELOCITY(FEET/SEC.) =  2.57   DEPTH*VELOCITY(FT*FT/SEC.) =   0.77
  LONGEST FLOWPATH FROM NODE   1470.00 TO NODE   1472.00 =    1345.00 FEET.

****************************************************************************
  FLOW PROCESS FROM NODE   1472.00 TO NODE   1472.00 IS CODE =  81
----------------------------------------------------------------------------
  >>>>>ADDITION OF SUBAREA TO MAINLINE PEAK FLOW<<<<<
============================================================================
   100 YEAR RAINFALL INTENSITY(INCH/HOUR) =  3.379
  *USER SPECIFIED(SUBAREA):
  RESIDENTIAL (1. DU/AC OR LESS) RUNOFF COEFFICIENT = .8800
  S.C.S. CURVE NUMBER (AMC II) =   0
  AREA-AVERAGE RUNOFF COEFFICIENT = 0.8800
  SUBAREA AREA(ACRES) =    0.30   SUBAREA RUNOFF(CFS) =    0.89
  TOTAL AREA(ACRES) =        1.2   TOTAL RUNOFF(CFS) =       3.57
  TC(MIN.) =   10.64

****************************************************************************
  FLOW PROCESS FROM NODE   1472.00 TO NODE   1474.00 IS CODE =  31
----------------------------------------------------------------------------
  >>>>>COMPUTE PIPE-FLOW TRAVEL TIME THRU SUBAREA<<<<<
  >>>>>USING COMPUTER-ESTIMATED PIPESIZE (NON-PRESSURE FLOW)<<<<<
============================================================================
  ELEVATION DATA: UPSTREAM(FEET) =   100.00  DOWNSTREAM(FEET) =    98.50
  FLOW LENGTH(FEET) =    75.00   MANNING'S N =  0.013
  ESTIMATED PIPE DIAMETER(INCH) INCREASED TO 18.000
  DEPTH OF FLOW IN  18.0 INCH PIPE IS   6.2 INCHES
  PIPE-FLOW VELOCITY(FEET/SEC.) =   6.67
  ESTIMATED PIPE DIAMETER(INCH) =  18.00    NUMBER OF PIPES =   1
  PIPE-FLOW(CFS) =       3.57
  PIPE TRAVEL TIME(MIN.) =   0.19    Tc(MIN.) =   10.83
  LONGEST FLOWPATH FROM NODE   1470.00 TO NODE   1474.00 =    1420.00 FEET.

****************************************************************************
  FLOW PROCESS FROM NODE   1474.00 TO NODE   1474.00 IS CODE =  81
----------------------------------------------------------------------------
  >>>>>ADDITION OF SUBAREA TO MAINLINE PEAK FLOW<<<<<
============================================================================
   100 YEAR RAINFALL INTENSITY(INCH/HOUR) =  3.359
  *USER SPECIFIED(SUBAREA):
  RESIDENTIAL (1. DU/AC OR LESS) RUNOFF COEFFICIENT = .8800
  S.C.S. CURVE NUMBER (AMC II) =   0
  AREA-AVERAGE RUNOFF COEFFICIENT = 0.8800
  SUBAREA AREA(ACRES) =    1.40   SUBAREA RUNOFF(CFS) =    4.14
  TOTAL AREA(ACRES) =        2.6   TOTAL RUNOFF(CFS) =       7.68
  TC(MIN.) =   10.83
```

```
****************************************************************************
  FLOW PROCESS FROM NODE   1474.00 TO NODE   1475.00 IS CODE =  31
----------------------------------------------------------------------------
  >>>>>COMPUTE PIPE-FLOW TRAVEL TIME THRU SUBAREA<<<<<
  >>>>>USING COMPUTER-ESTIMATED PIPESIZE (NON-PRESSURE FLOW)<<<<<
============================================================================
  ELEVATION DATA: UPSTREAM(FEET) =   100.00  DOWNSTREAM(FEET) =    90.20
  FLOW LENGTH(FEET) =   490.00   MANNING'S N =  0.013
  ESTIMATED PIPE DIAMETER(INCH) INCREASED TO 18.000
  DEPTH OF FLOW IN  18.0 INCH PIPE IS   9.5 INCHES
  PIPE-FLOW VELOCITY(FEET/SEC.) =   8.17
  ESTIMATED PIPE DIAMETER(INCH) =  18.00    NUMBER OF PIPES =   1
  PIPE-FLOW(CFS) =       7.68
  PIPE TRAVEL TIME(MIN.) =   1.00    Tc(MIN.) =   11.83
  LONGEST FLOWPATH FROM NODE   1470.00 TO NODE   1475.00 =    1910.00 FEET.

****************************************************************************
  FLOW PROCESS FROM NODE   1475.00 TO NODE   1475.00 IS CODE =  81
----------------------------------------------------------------------------
  >>>>>ADDITION OF SUBAREA TO MAINLINE PEAK FLOW<<<<<
============================================================================
   100 YEAR RAINFALL INTENSITY(INCH/HOUR) =  3.249
  *USER SPECIFIED(SUBAREA):
  RESIDENTIAL (1. DU/AC OR LESS) RUNOFF COEFFICIENT = .8800
  S.C.S. CURVE NUMBER (AMC II) =   0
  AREA-AVERAGE RUNOFF COEFFICIENT = 0.8800
  SUBAREA AREA(ACRES) =    1.00   SUBAREA RUNOFF(CFS) =    2.86
  TOTAL AREA(ACRES) =        3.6   TOTAL RUNOFF(CFS) =      10.29
  TC(MIN.) =   11.83

****************************************************************************
  FLOW PROCESS FROM NODE   1475.00 TO NODE   1475.50 IS CODE =  31
----------------------------------------------------------------------------
  >>>>>COMPUTE PIPE-FLOW TRAVEL TIME THRU SUBAREA<<<<<
  >>>>>USING COMPUTER-ESTIMATED PIPESIZE (NON-PRESSURE FLOW)<<<<<
============================================================================
  ELEVATION DATA: UPSTREAM(FEET) =   100.00  DOWNSTREAM(FEET) =    80.75
  FLOW LENGTH(FEET) =   385.00   MANNING'S N =  0.013
  ESTIMATED PIPE DIAMETER(INCH) INCREASED TO 18.000
  DEPTH OF FLOW IN  18.0 INCH PIPE IS   8.6 INCHES
  PIPE-FLOW VELOCITY(FEET/SEC.) =  12.38
  ESTIMATED PIPE DIAMETER(INCH) =  18.00    NUMBER OF PIPES =   1
  PIPE-FLOW(CFS) =      10.29
  PIPE TRAVEL TIME(MIN.) =   0.52    Tc(MIN.) =   12.35
  LONGEST FLOWPATH FROM NODE   1470.00 TO NODE   1475.50 =    2295.00 FEET.

****************************************************************************
  FLOW PROCESS FROM NODE   1475.50 TO NODE   1475.50 IS CODE =   1
----------------------------------------------------------------------------
  >>>>>DESIGNATE INDEPENDENT STREAM FOR CONFLUENCE<<<<<
============================================================================
  TOTAL NUMBER OF STREAMS =  2
  CONFLUENCE VALUES USED FOR INDEPENDENT STREAM  1 ARE:
  TIME OF CONCENTRATION(MIN.) =   12.35
  RAINFALL INTENSITY(INCH/HR) =   3.19
  TOTAL STREAM AREA(ACRES) =     3.60
  PEAK FLOW RATE(CFS) AT CONFLUENCE =     10.29
```

```
****************************************************************************
  FLOW PROCESS FROM NODE    398.00 TO NODE   1475.50 IS CODE =   7
----------------------------------------------------------------------------
  >>>>>USER SPECIFIED HYDROLOGY INFORMATION AT NODE<<<<<
============================================================================
  USER-SPECIFIED VALUES ARE AS FOLLOWS:
  TC(MIN) =  18.90   RAIN INTENSITY(INCH/HOUR) =  2.59
  TOTAL AREA(ACRES) =    36.90   TOTAL RUNOFF(CFS) =     46.00

****************************************************************************
  FLOW PROCESS FROM NODE   1475.50 TO NODE   1475.50 IS CODE =   1
----------------------------------------------------------------------------
  >>>>>DESIGNATE INDEPENDENT STREAM FOR CONFLUENCE<<<<<
  >>>>>AND COMPUTE VARIOUS CONFLUENCED STREAM VALUES<<<<<
============================================================================
  TOTAL NUMBER OF STREAMS =  2
  CONFLUENCE VALUES USED FOR INDEPENDENT STREAM  2 ARE:
  TIME OF CONCENTRATION(MIN.) =   18.90
  RAINFALL INTENSITY(INCH/HR) =   2.59
  TOTAL STREAM AREA(ACRES) =    36.90
  PEAK FLOW RATE(CFS) AT CONFLUENCE =     46.00

  ** CONFLUENCE DATA **
  STREAM     RUNOFF       Tc      INTENSITY      AREA
  NUMBER      (CFS)     (MIN.)   (INCH/HOUR)    (ACRE)
      1       10.29    12.35        3.192          3.60
      2       46.00    18.90        2.588         36.90

  RAINFALL INTENSITY AND TIME OF CONCENTRATION RATIO
  CONFLUENCE FORMULA USED FOR  2 STREAMS.

  ** PEAK FLOW RATE TABLE **
  STREAM     RUNOFF      Tc      INTENSITY
  NUMBER      (CFS)    (MIN.)   (INCH/HOUR)
      1       40.35    12.35       3.192
      2       54.35    18.90       2.588

  COMPUTED CONFLUENCE ESTIMATES ARE AS FOLLOWS:
  PEAK FLOW RATE(CFS) =      54.35   Tc(MIN.) =   18.90
  TOTAL AREA(ACRES) =       40.5
  LONGEST FLOWPATH FROM NODE   1450.00 TO NODE   1475.50 =    3410.00 FEET.

****************************************************************************
  FLOW PROCESS FROM NODE   1475.50 TO NODE   1476.00 IS CODE =  31
----------------------------------------------------------------------------
  >>>>>COMPUTE PIPE-FLOW TRAVEL TIME THRU SUBAREA<<<<<
  >>>>>USING COMPUTER-ESTIMATED PIPESIZE (NON-PRESSURE FLOW)<<<<<
============================================================================
  ELEVATION DATA: UPSTREAM(FEET) =   100.00  DOWNSTREAM(FEET) =    92.50
  FLOW LENGTH(FEET) =   150.00   MANNING'S N =  0.013
  DEPTH OF FLOW IN  27.0 INCH PIPE IS  18.7 INCHES
  PIPE-FLOW VELOCITY(FEET/SEC.) =  18.50
  ESTIMATED PIPE DIAMETER(INCH) =  27.00    NUMBER OF PIPES =   1
  PIPE-FLOW(CFS) =      54.35
  PIPE TRAVEL TIME(MIN.) =   0.14    Tc(MIN.) =   19.04
  LONGEST FLOWPATH FROM NODE   1450.00 TO NODE   1476.00 =    3560.00 FEET.

****************************************************************************
```

```
  FLOW PROCESS FROM NODE   1476.00 TO NODE   1476.00 IS CODE =  81
----------------------------------------------------------------------------
  >>>>>ADDITION OF SUBAREA TO MAINLINE PEAK FLOW<<<<<
============================================================================
   100 YEAR RAINFALL INTENSITY(INCH/HOUR) =  2.577
  *USER SPECIFIED(SUBAREA):
  RESIDENTIAL (1. DU/AC OR LESS) RUNOFF COEFFICIENT = .8800
  S.C.S. CURVE NUMBER (AMC II) =   0
  AREA-AVERAGE RUNOFF COEFFICIENT = 0.5233
  SUBAREA AREA(ACRES) =    0.70   SUBAREA RUNOFF(CFS) =    1.59
  TOTAL AREA(ACRES) =       41.2   TOTAL RUNOFF(CFS) =      55.56
  TC(MIN.) =   19.04

****************************************************************************
  FLOW PROCESS FROM NODE   1476.00 TO NODE   1476.00 IS CODE =   1
----------------------------------------------------------------------------
  >>>>>DESIGNATE INDEPENDENT STREAM FOR CONFLUENCE<<<<<
============================================================================
  TOTAL NUMBER OF STREAMS =  2
  CONFLUENCE VALUES USED FOR INDEPENDENT STREAM  1 ARE:
  TIME OF CONCENTRATION(MIN.) =   19.04
  RAINFALL INTENSITY(INCH/HR) =   2.58
  TOTAL STREAM AREA(ACRES) =    41.20
  PEAK FLOW RATE(CFS) AT CONFLUENCE =     55.56

****************************************************************************
  FLOW PROCESS FROM NODE    399.00 TO NODE   1476.10 IS CODE =   7
----------------------------------------------------------------------------
  >>>>>USER SPECIFIED HYDROLOGY INFORMATION AT NODE<<<<<
============================================================================
  USER-SPECIFIED VALUES ARE AS FOLLOWS:
  TC(MIN) =  15.00   RAIN INTENSITY(INCH/HOUR) =  2.90
  TOTAL AREA(ACRES) =     0.01   TOTAL RUNOFF(CFS) =      0.01

****************************************************************************
  FLOW PROCESS FROM NODE   1476.10 TO NODE   1476.10 IS CODE =  81
----------------------------------------------------------------------------
  >>>>>ADDITION OF SUBAREA TO MAINLINE PEAK FLOW<<<<<
============================================================================
   100 YEAR RAINFALL INTENSITY(INCH/HOUR) =  2.900
  *USER SPECIFIED(SUBAREA):
  RESIDENTIAL (1. DU/AC OR LESS) RUNOFF COEFFICIENT = .8800
  S.C.S. CURVE NUMBER (AMC II) =   0
  AREA-AVERAGE RUNOFF COEFFICIENT = 0.8747
  SUBAREA AREA(ACRES) =    1.00   SUBAREA RUNOFF(CFS) =    2.55
  TOTAL AREA(ACRES) =        1.0   TOTAL RUNOFF(CFS) =       2.56
  TC(MIN.) =   15.00

****************************************************************************
  FLOW PROCESS FROM NODE   1476.10 TO NODE   1476.00 IS CODE =  31
----------------------------------------------------------------------------
  >>>>>COMPUTE PIPE-FLOW TRAVEL TIME THRU SUBAREA<<<<<
  >>>>>USING COMPUTER-ESTIMATED PIPESIZE (NON-PRESSURE FLOW)<<<<<
============================================================================
  ELEVATION DATA: UPSTREAM(FEET) =   100.00  DOWNSTREAM(FEET) =    99.50
  FLOW LENGTH(FEET) =    25.00   MANNING'S N =  0.013
  ESTIMATED PIPE DIAMETER(INCH) INCREASED TO 18.000
  DEPTH OF FLOW IN  18.0 INCH PIPE IS   5.2 INCHES
```

```
  PIPE-FLOW VELOCITY(FEET/SEC.) =   6.06
  ESTIMATED PIPE DIAMETER(INCH) =  18.00    NUMBER OF PIPES =   1
  PIPE-FLOW(CFS) =       2.56
  PIPE TRAVEL TIME(MIN.) =   0.07    Tc(MIN.) =   15.07
  LONGEST FLOWPATH FROM NODE   1450.00 TO NODE   1476.00 =    3435.00 FEET.

****************************************************************************
  FLOW PROCESS FROM NODE   1476.00 TO NODE   1476.00 IS CODE =   1
----------------------------------------------------------------------------
  >>>>>DESIGNATE INDEPENDENT STREAM FOR CONFLUENCE<<<<<
  >>>>>AND COMPUTE VARIOUS CONFLUENCED STREAM VALUES<<<<<
============================================================================
  TOTAL NUMBER OF STREAMS =  2
  CONFLUENCE VALUES USED FOR INDEPENDENT STREAM  2 ARE:
  TIME OF CONCENTRATION(MIN.) =   15.07
  RAINFALL INTENSITY(INCH/HR) =   2.89
  TOTAL STREAM AREA(ACRES) =     1.01
  PEAK FLOW RATE(CFS) AT CONFLUENCE =      2.56

  ** CONFLUENCE DATA **
  STREAM     RUNOFF       Tc      INTENSITY      AREA
  NUMBER      (CFS)     (MIN.)   (INCH/HOUR)    (ACRE)
      1       55.56    19.04        2.577         41.20
      2        2.56    15.07        2.895          1.01

  RAINFALL INTENSITY AND TIME OF CONCENTRATION RATIO
  CONFLUENCE FORMULA USED FOR  2 STREAMS.

  ** PEAK FLOW RATE TABLE **
  STREAM     RUNOFF      Tc      INTENSITY
  NUMBER      (CFS)    (MIN.)   (INCH/HOUR)
      1       52.03    15.07       2.895
      2       57.84    19.04       2.577

  COMPUTED CONFLUENCE ESTIMATES ARE AS FOLLOWS:
  PEAK FLOW RATE(CFS) =      57.84   Tc(MIN.) =   19.04
  TOTAL AREA(ACRES) =       42.2
  LONGEST FLOWPATH FROM NODE   1450.00 TO NODE   1476.00 =    3560.00 FEET.

****************************************************************************
  FLOW PROCESS FROM NODE   1476.00 TO NODE   1477.00 IS CODE =  31
----------------------------------------------------------------------------
  >>>>>COMPUTE PIPE-FLOW TRAVEL TIME THRU SUBAREA<<<<<
  >>>>>USING COMPUTER-ESTIMATED PIPESIZE (NON-PRESSURE FLOW)<<<<<
============================================================================
  ELEVATION DATA: UPSTREAM(FEET) =   100.00  DOWNSTREAM(FEET) =    80.00
  FLOW LENGTH(FEET) =   400.00   MANNING'S N =  0.013
  DEPTH OF FLOW IN  27.0 INCH PIPE IS  19.6 INCHES
  PIPE-FLOW VELOCITY(FEET/SEC.) =  18.68
  ESTIMATED PIPE DIAMETER(INCH) =  27.00    NUMBER OF PIPES =   1
  PIPE-FLOW(CFS) =      57.84
  PIPE TRAVEL TIME(MIN.) =   0.36    Tc(MIN.) =   19.39
  LONGEST FLOWPATH FROM NODE   1450.00 TO NODE   1477.00 =    3960.00 FEET.

****************************************************************************
  FLOW PROCESS FROM NODE   1477.00 TO NODE   1477.00 IS CODE =  81
----------------------------------------------------------------------------
  >>>>>ADDITION OF SUBAREA TO MAINLINE PEAK FLOW<<<<<
```

```
============================================================================
   100 YEAR RAINFALL INTENSITY(INCH/HOUR) =  2.549
  *USER SPECIFIED(SUBAREA):
  RESIDENTIAL (1. DU/AC OR LESS) RUNOFF COEFFICIENT = .8800
  S.C.S. CURVE NUMBER (AMC II) =   0
  AREA-AVERAGE RUNOFF COEFFICIENT = 0.5389
  SUBAREA AREA(ACRES) =    0.90   SUBAREA RUNOFF(CFS) =    2.02
  TOTAL AREA(ACRES) =       43.1   TOTAL RUNOFF(CFS) =      59.21
  TC(MIN.) =   19.39

****************************************************************************
  FLOW PROCESS FROM NODE   1477.00 TO NODE   1478.00 IS CODE =  31
----------------------------------------------------------------------------
  >>>>>COMPUTE PIPE-FLOW TRAVEL TIME THRU SUBAREA<<<<<
  >>>>>USING COMPUTER-ESTIMATED PIPESIZE (NON-PRESSURE FLOW)<<<<<
============================================================================
  ELEVATION DATA: UPSTREAM(FEET) =   100.00  DOWNSTREAM(FEET) =    77.50
  FLOW LENGTH(FEET) =   450.00   MANNING'S N =  0.013
  DEPTH OF FLOW IN  27.0 INCH PIPE IS  20.0 INCHES
  PIPE-FLOW VELOCITY(FEET/SEC.) =  18.74
  ESTIMATED PIPE DIAMETER(INCH) =  27.00    NUMBER OF PIPES =   1
  PIPE-FLOW(CFS) =      59.21
  PIPE TRAVEL TIME(MIN.) =   0.40    Tc(MIN.) =   19.79
  LONGEST FLOWPATH FROM NODE   1450.00 TO NODE   1478.00 =    4410.00 FEET.

****************************************************************************
  FLOW PROCESS FROM NODE   1478.00 TO NODE   1478.00 IS CODE =  81
----------------------------------------------------------------------------
  >>>>>ADDITION OF SUBAREA TO MAINLINE PEAK FLOW<<<<<
============================================================================
   100 YEAR RAINFALL INTENSITY(INCH/HOUR) =  2.517
  *USER SPECIFIED(SUBAREA):
  RESIDENTIAL (1. DU/AC OR LESS) RUNOFF COEFFICIENT = .8800
  S.C.S. CURVE NUMBER (AMC II) =   0
  AREA-AVERAGE RUNOFF COEFFICIENT = 0.5436
  SUBAREA AREA(ACRES) =    0.60   SUBAREA RUNOFF(CFS) =    1.33
  TOTAL AREA(ACRES) =       43.7   TOTAL RUNOFF(CFS) =      59.80
  TC(MIN.) =   19.79

****************************************************************************
  FLOW PROCESS FROM NODE   1478.00 TO NODE   1479.00 IS CODE =  31
----------------------------------------------------------------------------
  >>>>>COMPUTE PIPE-FLOW TRAVEL TIME THRU SUBAREA<<<<<
  >>>>>USING COMPUTER-ESTIMATED PIPESIZE (NON-PRESSURE FLOW)<<<<<
============================================================================
  ELEVATION DATA: UPSTREAM(FEET) =   100.00  DOWNSTREAM(FEET) =    76.25
  FLOW LENGTH(FEET) =   475.00   MANNING'S N =  0.013
  DEPTH OF FLOW IN  27.0 INCH PIPE IS  20.2 INCHES
  PIPE-FLOW VELOCITY(FEET/SEC.) =  18.76
  ESTIMATED PIPE DIAMETER(INCH) =  27.00    NUMBER OF PIPES =   1
  PIPE-FLOW(CFS) =      59.80
  PIPE TRAVEL TIME(MIN.) =   0.42    Tc(MIN.) =   20.21
  LONGEST FLOWPATH FROM NODE   1450.00 TO NODE   1479.00 =    4885.00 FEET.

****************************************************************************
  FLOW PROCESS FROM NODE   1479.00 TO NODE   1479.00 IS CODE =  81
----------------------------------------------------------------------------
  >>>>>ADDITION OF SUBAREA TO MAINLINE PEAK FLOW<<<<<
```

```
============================================================================
   100 YEAR RAINFALL INTENSITY(INCH/HOUR) =  2.487
  *USER SPECIFIED(SUBAREA):
  RESIDENTIAL (1. DU/AC OR LESS) RUNOFF COEFFICIENT = .8800
  S.C.S. CURVE NUMBER (AMC II) =   0
  AREA-AVERAGE RUNOFF COEFFICIENT = 0.5474
  SUBAREA AREA(ACRES) =    0.50   SUBAREA RUNOFF(CFS) =    1.09
  TOTAL AREA(ACRES) =       44.2   TOTAL RUNOFF(CFS) =      60.19
  TC(MIN.) =   20.21

****************************************************************************
  FLOW PROCESS FROM NODE   1479.00 TO NODE   1480.00 IS CODE =  31
----------------------------------------------------------------------------
  >>>>>COMPUTE PIPE-FLOW TRAVEL TIME THRU SUBAREA<<<<<
  >>>>>USING COMPUTER-ESTIMATED PIPESIZE (NON-PRESSURE FLOW)<<<<<
============================================================================
  ELEVATION DATA: UPSTREAM(FEET) =   100.00  DOWNSTREAM(FEET) =    76.25
  FLOW LENGTH(FEET) =   475.00   MANNING'S N =  0.013
  DEPTH OF FLOW IN  27.0 INCH PIPE IS  20.3 INCHES
  PIPE-FLOW VELOCITY(FEET/SEC.) =  18.78
  ESTIMATED PIPE DIAMETER(INCH) =  27.00    NUMBER OF PIPES =   1
  PIPE-FLOW(CFS) =      60.19
  PIPE TRAVEL TIME(MIN.) =   0.42    Tc(MIN.) =   20.64
  LONGEST FLOWPATH FROM NODE   1450.00 TO NODE   1480.00 =    5360.00 FEET.

****************************************************************************
  FLOW PROCESS FROM NODE   1480.00 TO NODE   1480.00 IS CODE =  81
----------------------------------------------------------------------------
  >>>>>ADDITION OF SUBAREA TO MAINLINE PEAK FLOW<<<<<
============================================================================
   100 YEAR RAINFALL INTENSITY(INCH/HOUR) =  2.462
  *USER SPECIFIED(SUBAREA):
  RESIDENTIAL (1. DU/AC OR LESS) RUNOFF COEFFICIENT = .8800
  S.C.S. CURVE NUMBER (AMC II) =   0
  AREA-AVERAGE RUNOFF COEFFICIENT = 0.5511
  SUBAREA AREA(ACRES) =    0.50   SUBAREA RUNOFF(CFS) =    1.08
  TOTAL AREA(ACRES) =       44.7   TOTAL RUNOFF(CFS) =      60.66
  TC(MIN.) =   20.64

****************************************************************************
  FLOW PROCESS FROM NODE   1480.00 TO NODE   1481.00 IS CODE =  31
----------------------------------------------------------------------------
  >>>>>COMPUTE PIPE-FLOW TRAVEL TIME THRU SUBAREA<<<<<
  >>>>>USING COMPUTER-ESTIMATED PIPESIZE (NON-PRESSURE FLOW)<<<<<
============================================================================
  ELEVATION DATA: UPSTREAM(FEET) =   100.00  DOWNSTREAM(FEET) =    76.25
  FLOW LENGTH(FEET) =   475.00   MANNING'S N =  0.013
  DEPTH OF FLOW IN  27.0 INCH PIPE IS  20.4 INCHES
  PIPE-FLOW VELOCITY(FEET/SEC.) =  18.79
  ESTIMATED PIPE DIAMETER(INCH) =  27.00    NUMBER OF PIPES =   1
  PIPE-FLOW(CFS) =      60.66
  PIPE TRAVEL TIME(MIN.) =   0.42    Tc(MIN.) =   21.06
  LONGEST FLOWPATH FROM NODE   1450.00 TO NODE   1481.00 =    5835.00 FEET.

****************************************************************************
  FLOW PROCESS FROM NODE   1481.00 TO NODE   1481.00 IS CODE =  81
----------------------------------------------------------------------------
  >>>>>ADDITION OF SUBAREA TO MAINLINE PEAK FLOW<<<<<
```

```
============================================================================
   100 YEAR RAINFALL INTENSITY(INCH/HOUR) =  2.437
  *USER SPECIFIED(SUBAREA):
  RESIDENTIAL (1. DU/AC OR LESS) RUNOFF COEFFICIENT = .8800
  S.C.S. CURVE NUMBER (AMC II) =   0
  AREA-AVERAGE RUNOFF COEFFICIENT = 0.5548
  SUBAREA AREA(ACRES) =    0.50   SUBAREA RUNOFF(CFS) =    1.07
  TOTAL AREA(ACRES) =       45.2   TOTAL RUNOFF(CFS) =      61.11
  TC(MIN.) =   21.06

****************************************************************************
  FLOW PROCESS FROM NODE   1481.00 TO NODE   1482.00 IS CODE =  31
----------------------------------------------------------------------------
  >>>>>COMPUTE PIPE-FLOW TRAVEL TIME THRU SUBAREA<<<<<
  >>>>>USING COMPUTER-ESTIMATED PIPESIZE (NON-PRESSURE FLOW)<<<<<
============================================================================
  ELEVATION DATA: UPSTREAM(FEET) =   100.00  DOWNSTREAM(FEET) =    76.25
  FLOW LENGTH(FEET) =   475.00   MANNING'S N =  0.013
  DEPTH OF FLOW IN  27.0 INCH PIPE IS  20.6 INCHES
  PIPE-FLOW VELOCITY(FEET/SEC.) =  18.81
  ESTIMATED PIPE DIAMETER(INCH) =  27.00    NUMBER OF PIPES =   1
  PIPE-FLOW(CFS) =      61.11
  PIPE TRAVEL TIME(MIN.) =   0.42    Tc(MIN.) =   21.48
  LONGEST FLOWPATH FROM NODE   1450.00 TO NODE   1482.00 =    6310.00 FEET.

****************************************************************************
  FLOW PROCESS FROM NODE   1482.00 TO NODE   1482.00 IS CODE =  81
----------------------------------------------------------------------------
  >>>>>ADDITION OF SUBAREA TO MAINLINE PEAK FLOW<<<<<
============================================================================
   100 YEAR RAINFALL INTENSITY(INCH/HOUR) =  2.411
  *USER SPECIFIED(SUBAREA):
  RESIDENTIAL (1. DU/AC OR LESS) RUNOFF COEFFICIENT = .8800
  S.C.S. CURVE NUMBER (AMC II) =   0
  AREA-AVERAGE RUNOFF COEFFICIENT = 0.5583
  SUBAREA AREA(ACRES) =    0.50   SUBAREA RUNOFF(CFS) =    1.06
  TOTAL AREA(ACRES) =       45.7   TOTAL RUNOFF(CFS) =      61.54
  TC(MIN.) =   21.48

****************************************************************************
  FLOW PROCESS FROM NODE   1482.00 TO NODE   1483.00 IS CODE =  31
----------------------------------------------------------------------------
  >>>>>COMPUTE PIPE-FLOW TRAVEL TIME THRU SUBAREA<<<<<
  >>>>>USING COMPUTER-ESTIMATED PIPESIZE (NON-PRESSURE FLOW)<<<<<
============================================================================
  ELEVATION DATA: UPSTREAM(FEET) =   100.00  DOWNSTREAM(FEET) =    76.00
  FLOW LENGTH(FEET) =   480.00   MANNING'S N =  0.013
  DEPTH OF FLOW IN  27.0 INCH PIPE IS  20.7 INCHES
  PIPE-FLOW VELOCITY(FEET/SEC.) =  18.82
  ESTIMATED PIPE DIAMETER(INCH) =  27.00    NUMBER OF PIPES =   1
  PIPE-FLOW(CFS) =      61.54
  PIPE TRAVEL TIME(MIN.) =   0.43    Tc(MIN.) =   21.90
  LONGEST FLOWPATH FROM NODE   1450.00 TO NODE   1483.00 =    6790.00 FEET.

****************************************************************************
  FLOW PROCESS FROM NODE   1483.00 TO NODE   1483.00 IS CODE =  81
----------------------------------------------------------------------------
  >>>>>ADDITION OF SUBAREA TO MAINLINE PEAK FLOW<<<<<
```

```
============================================================================
   100 YEAR RAINFALL INTENSITY(INCH/HOUR) =  2.386
  *USER SPECIFIED(SUBAREA):
  RESIDENTIAL (1. DU/AC OR LESS) RUNOFF COEFFICIENT = .8800
  S.C.S. CURVE NUMBER (AMC II) =   0
  AREA-AVERAGE RUNOFF COEFFICIENT = 0.5618
  SUBAREA AREA(ACRES) =    0.50   SUBAREA RUNOFF(CFS) =    1.05
  TOTAL AREA(ACRES) =       46.2   TOTAL RUNOFF(CFS) =      61.94
  TC(MIN.) =   21.90

****************************************************************************
  FLOW PROCESS FROM NODE   1483.00 TO NODE   1484.00 IS CODE =  31
----------------------------------------------------------------------------
  >>>>>COMPUTE PIPE-FLOW TRAVEL TIME THRU SUBAREA<<<<<
  >>>>>USING COMPUTER-ESTIMATED PIPESIZE (NON-PRESSURE FLOW)<<<<<
============================================================================
  ELEVATION DATA: UPSTREAM(FEET) =   100.00  DOWNSTREAM(FEET) =    82.50
  FLOW LENGTH(FEET) =   350.00   MANNING'S N =  0.013
  DEPTH OF FLOW IN  27.0 INCH PIPE IS  20.8 INCHES
  PIPE-FLOW VELOCITY(FEET/SEC.) =  18.83
  ESTIMATED PIPE DIAMETER(INCH) =  27.00    NUMBER OF PIPES =   1
  PIPE-FLOW(CFS) =      61.94
  PIPE TRAVEL TIME(MIN.) =   0.31    Tc(MIN.) =   22.21
  LONGEST FLOWPATH FROM NODE   1450.00 TO NODE   1484.00 =    7140.00 FEET.

****************************************************************************
  FLOW PROCESS FROM NODE   1484.00 TO NODE   1484.00 IS CODE =  81
----------------------------------------------------------------------------
  >>>>>ADDITION OF SUBAREA TO MAINLINE PEAK FLOW<<<<<
============================================================================
   100 YEAR RAINFALL INTENSITY(INCH/HOUR) =  2.367
  *USER SPECIFIED(SUBAREA):
  RESIDENTIAL (1. DU/AC OR LESS) RUNOFF COEFFICIENT = .8800
  S.C.S. CURVE NUMBER (AMC II) =   0
  AREA-AVERAGE RUNOFF COEFFICIENT = 0.5632
  SUBAREA AREA(ACRES) =    0.20   SUBAREA RUNOFF(CFS) =    0.42
  TOTAL AREA(ACRES) =       46.4   TOTAL RUNOFF(CFS) =      61.94
  TC(MIN.) =   22.21
  NOTE: PEAK FLOW RATE DEFAULTED TO UPSTREAM VALUE

****************************************************************************
  FLOW PROCESS FROM NODE   1484.00 TO NODE   1485.00 IS CODE =  31
----------------------------------------------------------------------------
  >>>>>COMPUTE PIPE-FLOW TRAVEL TIME THRU SUBAREA<<<<<
  >>>>>USING COMPUTER-ESTIMATED PIPESIZE (NON-PRESSURE FLOW)<<<<<
============================================================================
  ELEVATION DATA: UPSTREAM(FEET) =   100.00  DOWNSTREAM(FEET) =    87.50
  FLOW LENGTH(FEET) =   250.00   MANNING'S N =  0.013
  DEPTH OF FLOW IN  27.0 INCH PIPE IS  20.8 INCHES
  PIPE-FLOW VELOCITY(FEET/SEC.) =  18.83
  ESTIMATED PIPE DIAMETER(INCH) =  27.00    NUMBER OF PIPES =   1
  PIPE-FLOW(CFS) =      61.94
  PIPE TRAVEL TIME(MIN.) =   0.22    Tc(MIN.) =   22.43
  LONGEST FLOWPATH FROM NODE   1450.00 TO NODE   1485.00 =    7390.00 FEET.

****************************************************************************
  FLOW PROCESS FROM NODE   1485.00 TO NODE   1485.00 IS CODE =  81
----------------------------------------------------------------------------
```

```
  >>>>>ADDITION OF SUBAREA TO MAINLINE PEAK FLOW<<<<<
============================================================================
   100 YEAR RAINFALL INTENSITY(INCH/HOUR) =  2.354
  *USER SPECIFIED(SUBAREA):
  RESIDENTIAL (1. DU/AC OR LESS) RUNOFF COEFFICIENT = .8800
  S.C.S. CURVE NUMBER (AMC II) =   0
  AREA-AVERAGE RUNOFF COEFFICIENT = 0.5659
  SUBAREA AREA(ACRES) =    0.40   SUBAREA RUNOFF(CFS) =    0.83
  TOTAL AREA(ACRES) =       46.8   TOTAL RUNOFF(CFS) =      62.36
  TC(MIN.) =   22.43

****************************************************************************
  FLOW PROCESS FROM NODE   1485.00 TO NODE   1495.00 IS CODE =  51
----------------------------------------------------------------------------
  >>>>>COMPUTE TRAPEZOIDAL CHANNEL FLOW<<<<<
  >>>>>TRAVELTIME THRU SUBAREA (EXISTING ELEMENT)<<<<<
============================================================================
  ELEVATION DATA: UPSTREAM(FEET) =    100.00  DOWNSTREAM(FEET) =     95.00
  CHANNEL LENGTH THRU SUBAREA(FEET) =   300.00   CHANNEL SLOPE =  0.0167
  CHANNEL BASE(FEET) =   10.00   "Z" FACTOR =   4.000
  MANNING'S FACTOR = 0.035   MAXIMUM DEPTH(FEET) =  10.00
   100 YEAR RAINFALL INTENSITY(INCH/HOUR) =  2.289
  *USER SPECIFIED(SUBAREA):
  RESIDENTIAL (1. DU/AC OR LESS) RUNOFF COEFFICIENT = .4500
  S.C.S. CURVE NUMBER (AMC II) =   0
  TRAVEL TIME COMPUTED USING ESTIMATED FLOW(CFS) =      63.28
  TRAVEL TIME THRU SUBAREA BASED ON VELOCITY(FEET/SEC.) =   4.59
  AVERAGE FLOW DEPTH(FEET) =   0.99   TRAVEL TIME(MIN.) =   1.09
  Tc(MIN.) =   23.52
  SUBAREA AREA(ACRES) =     1.80       SUBAREA RUNOFF(CFS) =    1.85
  AREA-AVERAGE RUNOFF COEFFICIENT =  0.562
  TOTAL AREA(ACRES) =       48.6         PEAK FLOW RATE(CFS) =      62.48

  END OF SUBAREA CHANNEL FLOW HYDRAULICS:
  DEPTH(FEET) =  0.99   FLOW VELOCITY(FEET/SEC.) =   4.54
  LONGEST FLOWPATH FROM NODE   1450.00 TO NODE   1495.00 =    7690.00 FEET.

****************************************************************************
  FLOW PROCESS FROM NODE   1495.00 TO NODE   1495.00 IS CODE =   1
----------------------------------------------------------------------------
  >>>>>DESIGNATE INDEPENDENT STREAM FOR CONFLUENCE<<<<<
============================================================================
  TOTAL NUMBER OF STREAMS =  2
  CONFLUENCE VALUES USED FOR INDEPENDENT STREAM  1 ARE:
  TIME OF CONCENTRATION(MIN.) =   23.52
  RAINFALL INTENSITY(INCH/HR) =   2.29
  TOTAL STREAM AREA(ACRES) =    48.61
  PEAK FLOW RATE(CFS) AT CONFLUENCE =     62.48

****************************************************************************
  FLOW PROCESS FROM NODE   1490.00 TO NODE   1490.00 IS CODE =  22
----------------------------------------------------------------------------
  >>>>>RATIONAL METHOD INITIAL SUBAREA ANALYSIS<<<<<
============================================================================
  *USER SPECIFIED(SUBAREA):
  RESIDENTIAL (1. DU/AC OR LESS) RUNOFF COEFFICIENT = .8800
  S.C.S. CURVE NUMBER (AMC II) =   0
  USER SPECIFIED Tc(MIN.) =    5.000
```

```
   100 YEAR RAINFALL INTENSITY(INCH/HOUR) =  4.400
  SUBAREA RUNOFF(CFS) =      1.55
  TOTAL AREA(ACRES) =      0.40   TOTAL RUNOFF(CFS) =      1.55

****************************************************************************
  FLOW PROCESS FROM NODE   1490.00 TO NODE   1491.00 IS CODE =  31
----------------------------------------------------------------------------
  >>>>>COMPUTE PIPE-FLOW TRAVEL TIME THRU SUBAREA<<<<<
  >>>>>USING COMPUTER-ESTIMATED PIPESIZE (NON-PRESSURE FLOW)<<<<<
============================================================================
  ELEVATION DATA: UPSTREAM(FEET) =   100.00  DOWNSTREAM(FEET) =    97.50
  FLOW LENGTH(FEET) =    50.00   MANNING'S N =  0.013
  ESTIMATED PIPE DIAMETER(INCH) INCREASED TO 18.000
  DEPTH OF FLOW IN  18.0 INCH PIPE IS   3.2 INCHES
  PIPE-FLOW VELOCITY(FEET/SEC.) =   7.27
  ESTIMATED PIPE DIAMETER(INCH) =  18.00    NUMBER OF PIPES =   1
  PIPE-FLOW(CFS) =       1.55
  PIPE TRAVEL TIME(MIN.) =   0.11    Tc(MIN.) =    5.11
  LONGEST FLOWPATH FROM NODE   1490.00 TO NODE   1491.00 =     350.00 FEET.

****************************************************************************
  FLOW PROCESS FROM NODE   1491.00 TO NODE   1491.00 IS CODE =  81
----------------------------------------------------------------------------
  >>>>>ADDITION OF SUBAREA TO MAINLINE PEAK FLOW<<<<<
============================================================================
   100 YEAR RAINFALL INTENSITY(INCH/HOUR) =  4.378
  *USER SPECIFIED(SUBAREA):
  RESIDENTIAL (1. DU/AC OR LESS) RUNOFF COEFFICIENT = .8800
  S.C.S. CURVE NUMBER (AMC II) =   0
  AREA-AVERAGE RUNOFF COEFFICIENT = 0.8800
  SUBAREA AREA(ACRES) =    0.20   SUBAREA RUNOFF(CFS) =    0.77
  TOTAL AREA(ACRES) =        0.6   TOTAL RUNOFF(CFS) =       2.31
  TC(MIN.) =    5.11

****************************************************************************
  FLOW PROCESS FROM NODE   1491.00 TO NODE   1495.00 IS CODE =  31
----------------------------------------------------------------------------
  >>>>>COMPUTE PIPE-FLOW TRAVEL TIME THRU SUBAREA<<<<<
  >>>>>USING COMPUTER-ESTIMATED PIPESIZE (NON-PRESSURE FLOW)<<<<<
============================================================================
  ELEVATION DATA: UPSTREAM(FEET) =   100.00  DOWNSTREAM(FEET) =    93.75
  FLOW LENGTH(FEET) =   125.00   MANNING'S N =  0.013
  ESTIMATED PIPE DIAMETER(INCH) INCREASED TO 18.000
  DEPTH OF FLOW IN  18.0 INCH PIPE IS   3.9 INCHES
  PIPE-FLOW VELOCITY(FEET/SEC.) =   8.17
  ESTIMATED PIPE DIAMETER(INCH) =  18.00    NUMBER OF PIPES =   1
  PIPE-FLOW(CFS) =       2.31
  PIPE TRAVEL TIME(MIN.) =   0.26    Tc(MIN.) =    5.37
  LONGEST FLOWPATH FROM NODE   1490.00 TO NODE   1495.00 =     475.00 FEET.

****************************************************************************
  FLOW PROCESS FROM NODE   1495.00 TO NODE   1495.00 IS CODE =   1
----------------------------------------------------------------------------
  >>>>>DESIGNATE INDEPENDENT STREAM FOR CONFLUENCE<<<<<
  >>>>>AND COMPUTE VARIOUS CONFLUENCED STREAM VALUES<<<<<
============================================================================
  TOTAL NUMBER OF STREAMS =  2
  CONFLUENCE VALUES USED FOR INDEPENDENT STREAM  2 ARE:
```

```
  TIME OF CONCENTRATION(MIN.) =    5.37
  RAINFALL INTENSITY(INCH/HR) =   4.33
  TOTAL STREAM AREA(ACRES) =     0.60
  PEAK FLOW RATE(CFS) AT CONFLUENCE =      2.31

  ** CONFLUENCE DATA **
  STREAM     RUNOFF       Tc      INTENSITY      AREA
  NUMBER      (CFS)     (MIN.)   (INCH/HOUR)    (ACRE)
      1       62.48    23.52        2.289         48.61
      2        2.31     5.37        4.330          0.60

  RAINFALL INTENSITY AND TIME OF CONCENTRATION RATIO
  CONFLUENCE FORMULA USED FOR  2 STREAMS.

  ** PEAK FLOW RATE TABLE **
  STREAM     RUNOFF      Tc      INTENSITY
  NUMBER      (CFS)    (MIN.)   (INCH/HOUR)
      1       35.33     5.37       4.330
      2       63.70    23.52       2.289

  COMPUTED CONFLUENCE ESTIMATES ARE AS FOLLOWS:
  PEAK FLOW RATE(CFS) =      63.70   Tc(MIN.) =   23.52
  TOTAL AREA(ACRES) =       49.2
  LONGEST FLOWPATH FROM NODE   1450.00 TO NODE   1495.00 =    7690.00 FEET.

****************************************************************************
  FLOW PROCESS FROM NODE   1495.00 TO NODE   1495.00 IS CODE =   7
----------------------------------------------------------------------------
  >>>>>USER SPECIFIED HYDROLOGY INFORMATION AT NODE<<<<<
============================================================================
  USER-SPECIFIED VALUES ARE AS FOLLOWS:
  TC(MIN) =  35.25   RAIN INTENSITY(INCH/HOUR) =  1.84
  TOTAL AREA(ACRES) =    49.20   TOTAL RUNOFF(CFS) =     46.00

****************************************************************************
  FLOW PROCESS FROM NODE   1495.00 TO NODE   1496.00 IS CODE =  31
----------------------------------------------------------------------------
  >>>>>COMPUTE PIPE-FLOW TRAVEL TIME THRU SUBAREA<<<<<
  >>>>>USING COMPUTER-ESTIMATED PIPESIZE (NON-PRESSURE FLOW)<<<<<
============================================================================
  ELEVATION DATA: UPSTREAM(FEET) =   100.00  DOWNSTREAM(FEET) =    99.60
  FLOW LENGTH(FEET) =    40.00   MANNING'S N =  0.013
  DEPTH OF FLOW IN  33.0 INCH PIPE IS  24.8 INCHES
  PIPE-FLOW VELOCITY(FEET/SEC.) =   9.60
  ESTIMATED PIPE DIAMETER(INCH) =  33.00    NUMBER OF PIPES =   1
  PIPE-FLOW(CFS) =      46.00
  PIPE TRAVEL TIME(MIN.) =   0.07    Tc(MIN.) =   35.32
  LONGEST FLOWPATH FROM NODE   1450.00 TO NODE   1496.00 =    7730.00 FEET.

****************************************************************************
  FLOW PROCESS FROM NODE   1496.00 TO NODE   1496.00 IS CODE =  81
----------------------------------------------------------------------------
  >>>>>ADDITION OF SUBAREA TO MAINLINE PEAK FLOW<<<<<
============================================================================
   100 YEAR RAINFALL INTENSITY(INCH/HOUR) =  1.840
  *USER SPECIFIED(SUBAREA):
  RESIDENTIAL (1. DU/AC OR LESS) RUNOFF COEFFICIENT = .4500
  S.C.S. CURVE NUMBER (AMC II) =   0
```

```
  AREA-AVERAGE RUNOFF COEFFICIENT = 0.5038
  SUBAREA AREA(ACRES) =    3.30   SUBAREA RUNOFF(CFS) =    2.73
  TOTAL AREA(ACRES) =       52.5   TOTAL RUNOFF(CFS) =      48.68
  TC(MIN.) =   35.32

****************************************************************************
  FLOW PROCESS FROM NODE   1496.00 TO NODE   1499.00 IS CODE =  31
----------------------------------------------------------------------------
  >>>>>COMPUTE PIPE-FLOW TRAVEL TIME THRU SUBAREA<<<<<
  >>>>>USING COMPUTER-ESTIMATED PIPESIZE (NON-PRESSURE FLOW)<<<<<
============================================================================
  ELEVATION DATA: UPSTREAM(FEET) =   100.00  DOWNSTREAM(FEET) =    98.35
  FLOW LENGTH(FEET) =   165.00   MANNING'S N =  0.013
  DEPTH OF FLOW IN  33.0 INCH PIPE IS  26.1 INCHES
  PIPE-FLOW VELOCITY(FEET/SEC.) =   9.65
  ESTIMATED PIPE DIAMETER(INCH) =  33.00    NUMBER OF PIPES =   1
  PIPE-FLOW(CFS) =      48.68
  PIPE TRAVEL TIME(MIN.) =   0.29    Tc(MIN.) =   35.60
  LONGEST FLOWPATH FROM NODE   1450.00 TO NODE   1499.00 =    7895.00 FEET.

****************************************************************************
  FLOW PROCESS FROM NODE   1499.00 TO NODE   1499.00 IS CODE =  11
----------------------------------------------------------------------------
  >>>>>CONFLUENCE MEMORY BANK # 1 WITH THE MAIN-STREAM MEMORY<<<<<
============================================================================

  ** MAIN STREAM CONFLUENCE DATA **
  STREAM     RUNOFF      Tc      INTENSITY     AREA
  NUMBER      (CFS)    (MIN.)   (INCH/HOUR)   (ACRE)
     1       48.68    35.60       1.832       52.50
  LONGEST FLOWPATH FROM NODE   1450.00 TO NODE   1499.00 =    7895.00 FEET.

  ** MEMORY BANK #  1 CONFLUENCE DATA **
  STREAM     RUNOFF      Tc      INTENSITY     AREA
  NUMBER      (CFS)    (MIN.)   (INCH/HOUR)   (ACRE)
     1      275.86    28.89       2.044      285.10
  LONGEST FLOWPATH FROM NODE   1400.00 TO NODE   1499.00 =    7925.00 FEET.

  ** PEAK FLOW RATE TABLE **
  STREAM    RUNOFF       Tc      INTENSITY
  NUMBER     (CFS)     (MIN.)   (INCH/HOUR)
     1     315.37      28.89        2.044
     2     295.88      35.60        1.832

  COMPUTED CONFLUENCE ESTIMATES ARE AS FOLLOWS:
  PEAK FLOW RATE(CFS) =     315.37   Tc(MIN.) =   28.89
  TOTAL AREA(ACRES) =      337.6

****************************************************************************
  FLOW PROCESS FROM NODE   1499.00 TO NODE   1499.00 IS CODE =  81
----------------------------------------------------------------------------
  >>>>>ADDITION OF SUBAREA TO MAINLINE PEAK FLOW<<<<<
============================================================================
   100 YEAR RAINFALL INTENSITY(INCH/HOUR) =  2.044
  *USER SPECIFIED(SUBAREA):
  RESIDENTIAL (1. DU/AC OR LESS) RUNOFF COEFFICIENT = .4500
  S.C.S. CURVE NUMBER (AMC II) =   0
  AREA-AVERAGE RUNOFF COEFFICIENT = 0.4743
```

```
  SUBAREA AREA(ACRES) =    8.50   SUBAREA RUNOFF(CFS) =    7.82
  TOTAL AREA(ACRES) =      346.1   TOTAL RUNOFF(CFS) =     335.58
  TC(MIN.) =   28.89
============================================================================
  END OF STUDY SUMMARY:
  TOTAL AREA(ACRES)     =      346.1  TC(MIN.) =     28.89
  PEAK FLOW RATE(CFS)   =     335.58
============================================================================
============================================================================
  END OF RATIONAL METHOD ANALYSIS
```

APPENDIX C

Backup for Weighted Runoff Coefficients

15013 - Southwest Village Post Project Hydrology

Upstream Node	Downstream Node	TRIBUTARY AREA (SQ FT)	AREA (AC.)	%IMPERVIOUS (ASSUMED)	IMPERVIOUS POST PROJECT (SQFT)	SOIL TYPE	IMPERVIOUS RUNOFF COEFFICENT	PERVIOUS RUNOFF COEFFICENT	WEIGHTED RUNOFF COEFFICENT
BASIN 100/POC 1 - PA 7-10									
100	102	5857	0.1	0%	0	D	0.95	0.45	0.45
102	115	380336	8.7	0%	0	D	0.95	0.45	0.45
130	132	5497	0.1	65%	3573	D	0.95	0.45	0.78
132	141	29797	0.7	65%	19368	D	0.95	0.45	0.78
141	141	35659	0.8	65%	23178	D	0.95	0.45	0.78
151	151	73219	1.7	65%	47592	D	0.95	0.45	0.78
160	160	71676	1.6	65%	46589	D	0.95	0.45	0.78
165	165	40138	0.9	50%	20069	D	0.95	0.45	0.70
SUM		**642179**	**14.7**	**25%**	**160370**				**0.57**
BASIN 200/POC 2 - PA 7-10									
200	201	5287	0.1	85%	4494	D	0.95	0.45	0.88
201	202	44221	1.0	85%	37588	D	0.95	0.45	0.88
220	221	2262	0.1	0%	0	D	0.95	0.45	0.45
221	222	19058	0.4	60%	11435	D	0.95	0.45	0.75
223	223	36372	0.8	75%	27279	D	0.95	0.45	0.83
224	224	25016	0.6	75%	18762	D	0.95	0.45	0.83
225	225	93955	2.2	75%	70466	D	0.95	0.45	0.83
228	228	27495	0.6	75%	20621	D	0.95	0.45	0.83
235	235	65636	1.5	75%	49227	D	0.95	0.45	0.83
240	241	3814	0.1	75%	2861	D	0.95	0.45	0.83
241	245	7458	0.2	75%	5594	D	0.95	0.45	0.83
245	245	77580	1.8	75%	58185	D	0.95	0.45	0.83
246	246	36370	0.8	75%	27278	D	0.95	0.45	0.83
255	255	45960	1.1	75%	34470	D	0.95	0.45	0.83
259	259	63429	1.5	75%	47572	D	0.95	0.45	0.83
262	262	46339	1.1	75%	34754	D	0.95	0.45	0.83
263	263	25084	0.6	75%	18813	D	0.95	0.45	0.83
267	267	36529	0.8	75%	27397	D	0.95	0.45	0.83
290	291	3603	0.1	75%	2702	D	0.95	0.45	0.83

Upstream Node	Downstream Node	TRIBUTARY AREA (SQ FT)	AREA (AC.)	%IMPERVIOUS (ASSUMED)	IMPERVIOUS POST PROJECT (SQFT)	SOIL TYPE	IMPERVIOUS RUNOFF COEFFICENT	PERVIOUS RUNOFF COEFFICENT	WEIGHTED RUNOFF COEFFICENT
291	292	586931	13.5	75%	440198	D	0.95	0.45	0.83
292	292	991729	22.8	75%	743797	D	0.95	0.45	0.83
270	271	7625	0.2	75%	5719	D	0.95	0.45	0.83
271	272	17145	0.4	75%	12859	D	0.95	0.45	0.83
274	274	23384	0.5	75%	17538	D	0.95	0.45	0.83
275	275	21054	0.5	75%	15791	D	0.95	0.45	0.83
276	276	17897	0.4	75%	13423	D	0.95	0.45	0.83
277	277	39157	0.9	75%	29368	D	0.95	0.45	0.83
279	279	25944	0.6	75%	19458	D	0.95	0.45	0.83
285	285	100339	2.3	75%	75254	D	0.95	0.45	0.83
286	286	62732	1.4	75%	47049	D	0.95	0.45	0.83
298	298	45699	1.0	75%	34274	D	0.95	0.45	0.83
SUM		**2605104**	**59.8**	**75%**	**1954224**				**0.83**
BASIN 300/ Vault 3A/ PA11-14									
300	302	3279	0.1	65%	2131	D	0.95	0.45	0.78
302	304	20959	0.5	65%	13623	D	0.95	0.45	0.78
306	306	15250	0.4	65%	9913	D	0.95	0.45	0.78
308	308	23949	0.5	65%	15567	D	0.95	0.45	0.78
310	310	23086	0.5	65%	15006	D	0.95	0.45	0.78
312	312	21910	0.5	65%	14242	D	0.95	0.45	0.78
314	314	21978	0.5	65%	14286	D	0.95	0.45	0.78
316	316	32526	0.7	65%	21142	D	0.95	0.45	0.78
318	318	39045	0.9	65%	25379	D	0.95	0.45	0.78
320	320	53267	1.2	65%	34624	D	0.95	0.45	0.78
322	322	42152	1.0	65%	27399	D	0.95	0.45	0.78
324	324	26797	0.6	65%	17418	D	0.95	0.45	0.78
325	325	25657	0.6	65%	16677	D	0.95	0.45	0.78
326	326	25924	0.6	65%	16851	D	0.95	0.45	0.78
328	328	67398	1.5	65%	43809	D	0.95	0.45	0.78
330	330	43371	1.0	65%	28191	D	0.95	0.45	0.78
332	332	50030	1.1	65%	32520	D	0.95	0.45	0.78
334	334	67398	1.5	65%	43809	D	0.95	0.45	0.78

Upstream Node	Downstream Node	TRIBUTARY AREA (SQ FT)	AREA (AC.)	%IMPERVIOUS (ASSUMED)	IMPERVIOUS POST PROJECT (SQFT)	SOIL TYPE	IMPERVIOUS RUNOFF COEFFICENT	PERVIOUS RUNOFF COEFFICENT	WEIGHTED RUNOFF COEFFICENT
336	336	49481	1.1	65%	32163	D	0.95	0.45	0.78
339.1	339.2	3520	0.1	75%	2640	D	0.95	0.45	0.83
339.2	340	49107	1.1	75%	36830	D	0.95	0.45	0.83
342	342	56091	1.3	75%	42068	D	0.95	0.45	0.83
344	344	47868	1.1	75%	35901	D	0.95	0.45	0.83
346	346	56900	1.3	75%	42675	D	0.95	0.45	0.83
348	348	43157	1.0	75%	32368	D	0.95	0.45	0.83
350	350	42605	1.0	75%	31954	D	0.95	0.45	0.83
351	351	23213	0.5	75%	17410	D	0.95	0.45	0.83
352	353	3267	0.1	75%	2450	D	0.95	0.45	0.83
353	354	16511	0.4	75%	12383	D	0.95	0.45	0.83
355	355	46104	1.1	75%	34578	D	0.95	0.45	0.83
356	356	34255	0.8	75%	25691	D	0.95	0.45	0.83
357	357	28885	0.7	75%	21664	D	0.95	0.45	0.83
358	358	28687	0.7	75%	21515	D	0.95	0.45	0.83
360	360	36468	0.8	75%	27351	D	0.95	0.45	0.83
362	362	36233	0.8	75%	27175	D	0.95	0.45	0.83
364	364	28686	0.7	75%	21515	D	0.95	0.45	0.83
366	366	50274	1.2	75%	37706	D	0.95	0.45	0.83
367.1	367.2	4204	0.1	65%	2733	D	0.95	0.45	0.78
367.2	368	8594	0.2	65%	5586	D	0.95	0.45	0.78
370	370	32434	0.7	65%	21082	D	0.95	0.45	0.78
372	372	32342	0.7	65%	21022	D	0.95	0.45	0.78
374	374	21887	0.5	65%	14227	D	0.95	0.45	0.78
376	376	50364	1.2	65%	32737	D	0.95	0.45	0.78
378	378	44071	1.0	65%	28646	D	0.95	0.45	0.78
380	380	54042	1.2	75%	40532	D	0.95	0.45	0.83
382	382	31897	0.7	75%	23923	D	0.95	0.45	0.83
384	384	37599	0.9	75%	28199	D	0.95	0.45	0.83
SUM		**1602722**	**36.8**	**70%**	**1117306**				**0.80**
BASIN 1400 - BEYER ROAD AND MOODY CANYON OFFSITES									
1400	1401	14173	0.3	50%	7087	D	0.95	0.45	0.70

Upstream Node	Downstream Node	TRIBUTARY AREA (SQ FT)	AREA (AC.)	%IMPERVIOUS (ASSUMED)	IMPERVIOUS POST PROJECT (SQFT)	SOIL TYPE	IMPERVIOUS RUNOFF COEFFICENT	PERVIOUS RUNOFF COEFFICENT	WEIGHTED RUNOFF COEFFICENT
1401	1402	569147	13.1	50%	284574	D	0.95	0.45	0.70
1403	1403	224794	5.2	70%	157356	D	0.95	0.45	0.80
1402	1404	752554	17.3	5%	37628	D	0.95	0.45	0.48
1404	1405	1062972	24.4	0%	0	D	0.95	0.45	0.45
199	1405	808107	18.6	0%	0	D	0.95	0.45	0.45
1405	1410	222771	5.1	0%	0	D	0.95	0.45	0.45
299	1410	794060	18.2	0%	0	D	0.95	0.45	0.45
1410	1420	697434	16.0	0%	0	D	0.95	0.45	0.45
1416	1417	2806	0.1	0%	0	D	0.95	0.45	0.45
1417	1418	62119	1.4	0%	0	D	0.95	0.45	0.45
1418	1420	95169	2.2	0%	0	D	0.95	0.45	0.45
1420	1430	2874356	66.0	0%	0	D	0.95	0.45	0.45
1427	1428	4353	0.1	0%	0	D	0.95	0.45	0.45
1428	1429	209644	4.8	0%	0	D	0.95	0.45	0.45
1450	1451	4560	0.1	0%	0	D	0.95	0.45	0.45
1451	1453	106620	2.4	0%	0	D	0.95	0.45	0.45
1453.1	1453.1	101606	2.3	0%	0	D	0.95	0.45	0.45
1453	1454	149586	3.4	0%	0	D	0.95	0.45	0.45
1454.1	1454.1	26590	0.6	0%	0	D	0.95	0.45	0.45
1454.2	1454.2	185613	4.3	0%	0	D	0.95	0.45	0.45
1454	1455	79919	1.8	0%	0	D	0.95	0.45	0.45
1455.1	1455.1	9697	0.2	0%	0	D	0.95	0.45	0.45
1470	1471	3455	0.1	85%	2937	D	0.95	0.45	0.88
1471	1472	33660	0.8	85%	28611	D	0.95	0.45	0.88
1472.2	1472.2	14676	0.3	85%	12475	D	0.95	0.45	0.88
1473.1	1473.1	31323	0.7	85%	26625	D	0.95	0.45	0.88
1473.2	1473.2	28863	0.7	85%	24534	D	0.95	0.45	0.88
1475.1	1475.1	31880	0.7	85%	27098	D	0.95	0.45	0.88
1475.2	1475.2	12312	0.3	85%	10465	D	0.95	0.45	0.88
1476.1	1476.1	43326	1.0	85%	36827	D	0.95	0.45	0.88
1476.2	1476.2	31815	0.7	85%	27043	D	0.95	0.45	0.88
1477.1	1477.1	28148	0.6	85%	23926	D	0.95	0.45	0.88

15013C
3/3/2022

Upstream Node	Downstream Node	TRIBUTARY AREA (SQ FT)	AREA (AC.)	%IMPERVIOUS (ASSUMED)	IMPERVIOUS POST PROJECT (SQFT)	SOIL TYPE	IMPERVIOUS RUNOFF COEFFICENT	PERVIOUS RUNOFF COEFFICENT	WEIGHTED RUNOFF COEFFICENT
1477.2	1477.2	8880	0.2	85%	7548	D	0.95	0.45	0.88
1478.1	1478.1	17558	0.4	85%	14924	D	0.95	0.45	0.88
1478.2	1478.2	9175	0.2	85%	7799	D	0.95	0.45	0.88
1479.1	1479.1	13037	0.3	85%	11081	D	0.95	0.45	0.88
1479.2	1479.2	9463	0.2	85%	8044	D	0.95	0.45	0.88
1480.1	1480.1	12970	0.3	85%	11025	D	0.95	0.45	0.88
1480.2	1480.2	9432	0.2	85%	8017	D	0.95	0.45	0.88
1481.1	1481.1	12868	0.3	85%	10938	D	0.95	0.45	0.88
1481.2	1481.2	9572	0.2	85%	8136	D	0.95	0.45	0.88
1482.1	1482.1	12777	0.3	85%	10860	D	0.95	0.45	0.88
1482.2	1482.2	9498	0.2	85%	8073	D	0.95	0.45	0.88
1483.1	1483.1	12809	0.3	85%	10888	D	0.95	0.45	0.88
1483.2	1483.2	9845	0.2	85%	8368	D	0.95	0.45	0.88
1484.1	1484.1	7105	0.2	85%	6039	D	0.95	0.45	0.88
1485	1485	16272	0.4	85%	13831	D	0.95	0.45	0.88
1490	1490	15821	0.4	85%	13448	D	0.95	0.45	0.88
1491	1491	8677	0.2	85%	7375	D	0.95	0.45	0.88
1495	1495	78269	1.8	0%	0	D	0.95	0.45	0.45
1496.1	1496.1	143880	3.3	0%	0	D	0.95	0.45	0.45
1498.5	1498.5	371968	8.5	0%	0	D	0.95	0.45	0.45
SUM		**10107984.0**	**232.0**	**9%**	**873578.0**				**0.49**

Totals for Moody Canyon / POC M.C.							
Major Basin			Area	%Impervious			Weighted Runoff Coefficent
100			14.7	25%			0.57
200			59.8	75%			0.83
300			36.8	70%			0.80
1400			232.0	9%			0.49
Sum			**343.4**	**27%**			**0.59**

\\cp.rickeng.com\projects\C_SD_J\15013 - South Otay\WaterResources\Hydrology\RationalMethod\15013_DRN_HMP_WQ.xlsx

15013 - Southwest Village - Summary Of Hydrology

			PRE PROJECT			POST PROJECT					
								UNDETAINED		DETAINED	
POI #	**Pre Project Node**	**Post Project Node**	**AREA**	**T-C**	**Q-100**	**AREA**	**∆AREA**	**T-C**	**Q-100**	**T-C**	**Q-100**
1	199	199	17.2	15.3	22.3	14.7	-2.5	12.9	29.8	13.9	18.4
2	299	299	61.0	15.9	77.7	59.8	-1.2	11.5	99.7	19.5	72.5
3A	399	398	27.6	15.0	36.1	29.7	9.3	11.9	79.4	18.9	46.0
3B		399				7.2		10.3	19.8		
M.C. (MOODY CANYON)	**1499**	**1499**	**319.9**	**24.2**	**337.0**	**343.4**	23.5	**22.9**	**429.4**	**28.9**	**335.6**
4	499	499	7.3	12.9	9.5						
5	599	599	14.3	16.3	18.0						

Note:

1. THE PROJECT PROPOSES TO DIVERT A TOTAL OF 23.5 AC INTO THE MOODY CANYON WATERSHED AT NODE 1499, THE PROJECT'S POINT OF CONNECTION TO EXISTING INFRASTRUCTURE.
2. THE MAJORITY OF THIS DIVERSION IS FROM BASINS 400 AND 500 (21.6 AC). ADDITIONAL DIVERSION IS DUE TO ROADWAY GRADING FOR BEYER ROAD.
3. BASIN 300 USES A VAULT TYPE BMP TO DETAIN PEAK RUNOFF. THERE ARE TWO INFLOW LINES TO THE VAULT AND EACH LINE HAS A BYPASS PIPE. FOR THE DETAINED CONDITION THERE IS UNCERTAINTY ABOUT HOW FLOWS WILL BE DISTRUBUTED AMONG THE TWO PARALLEL OUTFLOW PIPES. MORE DETAIL ABOUT THIS DISTRIBUTION MAY BE PROVIDED IN FINAL ENGINEERING.
4. UNITS ARE IN ACRES, MINUTES, AND CFS
5. PLEASE REFER TO THE DRAINAGE MAPS FOR NODE AND POINT OF INTEREST LOCATIONS.

APPENDIX D

Preliminary Inlet Sizing Calculations

Typical Grate inlet sizing

Grate Inlet Sizing (Weir vs. Orifice)

Weir coefficient, C_w	3.0
Orifice coefficient, C_o	0.60
Available head, h (feet)	0.25

3 inch depression - typical

Inlet Type	Capacity based on Weir Equation[3, 4], Q_{cap} (cfs[5])	Capacity based on Orifice Equation[3, 4], Q_{cap} (cfs[5])	Governing Equation
1212 Series - 12"x12" Catch Basin[1]	0.80	1.34	Weir
1218 Series - 12"x18" Catch Basin[1]	0.92	1.79	Weir
1818 Series - 18"x18" Catch Basin[1]	1.05	2.28	Weir
2424 Series - 24"x24" Catch Basin[1]	1.35	3.81	Weir
3636 Series - 36"x36" Catch Basin[1]	1.97	7.96	Weir

Type 'I' Catch Basin[2]	1.73	5.85	Weir

Note:

[1] Based on Brooks Products, Inc. - H 20-44 Traffic, Steel Grate, not Parkway, Cast-iron grate

[2] Based on Drawing Number D-13 & D-15 in the City of San Diego Regional Standard Drawings, dated April 2003

[3] A reduction factor of 50% assumed for clogging.

[4] Weir equation, $Q = C_w L_e (h)^{3/2}$; Orifice equation, $Q = C_o A_e (2gh)^{1/2}$

[5] "cfs" = cubic feet per second

15013 - Southwest Village

INLET NODE	AREA (ac)	I (in/hr)	C	Q100 (cfs)	LOCATION	INLET SELECTION
115	8.8	4.4	0.45	17.4	Sump	Type-F
120	0.1	4.4	0.45	0.2	Sump	12-12 Brookes Box
122	0.4	4.4	0.45	0.8	Sump	Type-F
135	0.8	4.4	0.78	2.7	Grade	B6
140	0.8	4.4	0.78	2.7	Grade	B6
150	1.7	4.4	0.78	5.8	Sump	B6
160	1.6	4.4	0.78	5.5	Sump	B6
170	0.4	4.4	0.45	0.8	Sump	Type-F
202	1.1	4.4	0.83	4.0	Grade	B8
211	1.0	4.4	0.83	3.7	Sump	B4
212	0.5	4.4	0.83	1.8	Grade	B4
213	0.1	4.4	0.83	0.4	Sump	B4
214	0.1	4.4	0.83	0.4	Sump	B4
216	0.5	4.4	0.83	1.8	Sump	B4
222	0.5	4.4	0.65	1.4	Grade	B4
223	0.8	4.4	0.83	2.9	Grade	B6
224	0.6	4.4	0.83	2.2	Grade	B6
226	0.5	4.4	0.83	1.8	Sump	B4
227	0.1	4.4	0.83	0.4	Sump	B4
231	0.5	4.4	0.83	1.8	Grade	B4
232	1.0	4.4	0.83	3.7	Grade	B8
243	0.7	4.4	0.83	2.6	Sump	2424 Brooks Box
245	1.3	4.4	0.83	4.7	Sump	2424 Brooks Box
246	0.8	4.4	0.83	2.9	Sump	2424 Brooks Box
251	0.5	4.4	0.83	1.8	Sump	B4
252	0.5	4.4	0.83	1.8	Sump	B4
253	0.1	4.4	0.83	0.4	Sump	B4
256	0.3	4.4	0.83	1.1	Sump	B4
257	0.4	4.4	0.83	1.5	Sump	B4
258	0.8	4.4	0.83	2.9	Sump	2424 Brooks Box
260	0.1	4.4	0.83	0.4	Grade	B4
261	1.0	4.4	0.83	3.7	Grade	B8
263	0.6	4.4	0.83	2.2	Grade	B6
267	0.8	4.4	0.83	2.9	Grade	B10
272	0.6	4.4	0.83	2.2	Grade	B6
273	0.5	4.4	0.83	1.8	Grade	B4
275	0.5	4.4	0.45	1.0	Sump	1818 Brooks Box
276	0.4	4.4	0.83	1.5	Grade	B4

277	0.9	4.4	0.83	3.3	Grade	B8
278	0.6	4.4	0.83	2.2	Grade	B6
282	0.6	4.4	0.83	2.2	Grade	B6
283	0.6	4.4	0.83	2.2	Grade	B6
285	1.1	4.4	0.83	4.0	Sump	B6
286	1.4	4.4	0.83	5.1	Sump	B6
298	1.0	4.4	0.45	2.0	Sump	Type F
304	0.6	4.4	0.78	2.1	Sump	2424 Brooks Box
306	0.4	4.4	0.78	1.4	Sump	2424 Brooks Box
308	0.5	4.4	0.78	1.7	Sump	B4
310	0.5	4.4	0.78	1.7	Sump	B4
312	0.5	4.4	0.78	1.7	Sump	B4
314	0.5	4.4	0.78	1.7	Sump	B4
316	0.7	4.4	0.78	2.4	Sump	B4
318	0.9	4.4	0.78	3.1	Sump	B8
320	1.2	4.4	0.78	4.1	Grade	B10
322	1.0	4.4	0.78	3.4	Grade	B10
324	0.6	4.4	0.78	2.1	Grade	B6
325	0.6	4.4	0.78	2.1	Grade	B6
328	0.6	4.4	0.78	2.1	Sump	B4
330	1.5	4.4	0.78	5.1	Sump	B6
332	1.1	4.4	0.78	3.8	Grade	B8
334	1.5	4.4	0.78	5.1	Sump	B6
336	1.1	4.4	0.78	3.8	Sump	B4
326	0.5	4.4	0.78	1.7	Sump	B4
339.2	0.1	4.4	0.83	0.4	Sump	B4
340	1.1	4.4	0.83	4.0	Grade	B6
342	1.3	4.4	0.83	4.7	Grade	B6
344	1.0	4.4	0.83	3.7	Grade	B6
346	1.3	4.4	0.83	4.7	Grade	B8
348	1.0	4.4	0.83	3.7	Grade	B6
350	1.0	4.4	0.83	3.7	Grade	B8
351	0.5	4.4	0.83	1.8	Grade	B8
354	1.0	4.4	0.83	3.7	Sump	2424 Brooks Box
356	0.8	4.4	0.83	2.9	Grade	B6
357	0.7	4.4	0.83	2.6	Grade	B6
358	0.7	4.4	0.83	2.6	Grade	B6
360	0.8	4.4	0.83	2.9	Grade	B6
362	0.8	4.4	0.83	2.9	Grade	B6
364	0.7	4.4	0.83	2.6	Grade	B6
366	1.2	4.4	0.83	4.4	Sump	B8
368	0.3	4.4	0.78	1.0	Sump	Type F

370	0.7	4.4	0.78	2.4	Grade	B6
372	0.7	4.4	0.78	2.4	Grade	B6
374	0.5	4.4	0.78	1.7	Sump	2424 Brooks Box
376	1.2	4.4	0.78	4.1	Sump	B4
378	1.0	4.4	0.78	3.4	Sump	B4
380	1.2	4.4	0.83	4.4	Grade	B6
382	0.7	4.4	0.83	2.6	Grade	B6
384	0.9	4.4	0.83	3.3	Sump	B8
1472.1	0.9	4.4	0.88	3.5	Grade	B8
1472.2	0.3	4.4	0.88	1.3	Grade	B4
1473.1	0.7	4.4	0.88	2.8	Grade	B6
1473.2	0.7	4.4	0.88	2.6	Grade	B6
1475.1	0.7	4.4	0.88	2.8	Grade	B6
1475.2	0.3	4.4	0.88	1.1	Grade	B4
1476.1	1.0	4.4	0.88	3.8	Grade	B8
1476.2	0.7	4.4	0.88	2.8	Grade	B6
1477.1	0.6	4.4	0.88	2.5	Grade	B6
1477.2	0.2	4.4	0.88	0.8	Grade	B4
1478.1	0.4	4.4	0.88	1.6	Grade	B4
1478.2	0.2	4.4	0.88	0.8	Grade	B4
1479.1	0.3	4.4	0.88	1.2	Grade	B4
1479.2	0.2	4.4	0.88	0.8	Grade	B4
1480.1	0.3	4.4	0.88	1.1	Grade	B4
1480.2	0.2	4.4	0.88	0.8	Grade	B4
1481.1	0.3	4.4	0.88	1.1	Grade	B4
1481.2	0.2	4.4	0.88	0.8	Grade	B4
1482.1	0.3	4.4	0.88	1.1	Grade	B4
1482.2	0.2	4.4	0.88	0.8	Grade	B4
1483.1	0.3	4.4	0.88	1.1	Grade	B4
1483.2	0.2	4.4	0.88	0.9	Grade	B4
1484.1	0.2	4.4	0.88	0.6	Grade	B4
1485.0	0.4	4.4	0.88	1.4	Grade	B20
1490.0	0.4	4.4	0.88	1.4	Grade	B4
1491.0	0.2	4.4	0.88	0.8	Grade	B4

NOTES

1. Q100 IS BASED ON MINIMUM 5MIN TC
2. MIN OF 1-INCH OF FREEBOARD IS PROVIDED BELOW TOP OF CURB
3. WHILE INLETS ARE NOT DESIGNED TO BYPASS FLOWS, INLETS AT TERMINAL SUMPS OR OTHER KEY LOCATIONS WHERE BYPASS WOULD BE UNDESIREABLE HAVE BEEN UPSZIED FOR ADDED SAFETY.

15013C - Southwest Village
3/2/2022

Inlet Capcity Calculation
(Sag)

Type of Inlet	Length of Opening (ft)	Allowable Depth (in)	Gutter Depression (in)	Weir Flow (cfs)
B-Type	4	5	4	4.7
B-Type	6	5	4	5.9
B-Type	8	5	4	7.2
B-Type	10	5	4	8.4
B-Type	12	5	4	9.7
B-Type	14	5	4	11.3
B-Type	16	5	4	12.9
B-Type	18	5	4	14.5
B-Type	20	5	4	16.1

Notes

1. Refer to HEC-22 - Section 4.4.4.2 Curb Opening Inlets for equations and backup.

Inlet Capcity Calculation
(On Grade)

Type of Inlet	Length of Opening (ft)	Allowable Depth (in)	Gutter Depression (in)	Weir Flow (cfs)
B-Type	4	5	4	1.8
B-Type	6	5	4	2.7
B-Type	8	5	4	3.6
B-Type	10	5	4	4.5
B-Type	12	5	4	5.5
B-Type	14	5	4	6.4
B-Type	16	5	4	7.3
B-Type	18	5	4	8.2
B-Type	20	5	4	9.1

Notes

1. Refer to HEC-22 - Section 4.4.4.2 Curb Opening Inlets for equations and backup.

APPENDIX E

Preliminary Storm Drain Sizing Calculations

Preliminary Storm Drain Size Detained 100-yr

The purpose of this table is to provide an estimated pipe size to convey the 100-year flow rates with a sizing factor.

Manning's n: 0.013

Sizing Factor (%): 30

Upstream Node	Downstream Node	Q_{100} (cfs[1])	Q_{100} with Sizing Factor (cfs[1])	Estimated Slope (%)	Minimum Pipe Size[2] (feet)	Recommended Pipe Size (inches)	Selected Pipe Size (inches)	Notes
PA 7-10 (Basin 100)								
115.0	179.0	10.0	13.0	5.0%	1.20	18"	**24**	Upsize pipe due to difficulty in accessing outfall
120.0	122.0	1.0	1.3	1.0%	0.68	10"	**18**	18" COSD minimum Pipe size
122.0	165.0	2.0	2.6	1.0%	0.89	12"	**18**	18" COSD minimum Pipe size
135.0	141.0	2.4	3.1	1.0%	0.95	12"	**18**	18" COSD minimum Pipe size
140.0	141.0	2.4	3.1	1.0%	0.95	12"	**18**	18" COSD minimum Pipe size
141.0	151.0	4.8	6.2	1.0%	1.23	18"	**18**	18" COSD minimum Pipe size
150.0	151.0	5.1	6.6	1.0%	1.26	18"	**18**	18" COSD minimum Pipe size
151.0	160.0	9.9	12.9	1.0%	1.62	24"	**24**	
160.0	165.0	13.5	17.6	1.0%	1.82	24"	**24**	
165.0	170.0	15.0	19.5	2.0%	1.66	24"	**24**	
170.0	179.0	15.5	20.2	5.0%	1.41	18"	**30**	Upsize pipe due to difficulty in accessing outfall
179.0	180.0	25.5	33.2	5.0%	1.71	24"	**30**	Upsize pipe due to difficulty in accessing outfall

Upstream Node	Downstream Node	Q_{100} (cfs^1)	Q_{100} with Sizing Factor (cfs^1)	Estimated Slope (%)	Minimum Pipe Size^2 (feet)	Recommended Pipe Size (inches)	Selected Pipe Size (inches)	Notes
PA 7-10 (Basin 200)								
202.0	230.0	2.0	2.6	1.0%	0.89	12"	**18**	18" COSD minimum Pipe size
210.0	212.0	3.0	3.9	1.0%	1.03	18"	**18"**	
211.0	212.0	0.5	0.7	1.0%	0.53	8"	**18**	18" COSD minimum Pipe size
212.0	215.0	2.5	3.3	1.0%	0.97	12"	**18**	18" COSD minimum Pipe size
215.0	216.0	5.0	6.5	1.0%	1.25	18"	**18"**	
216.0	225.0	7.5	9.8	1.0%	1.46	18"	**18"**	
222.0	223.0	1.5	2.0	1.0%	0.80	10"	**18**	18" COSD minimum Pipe size
223.0	224.0	3.9	5.1	1.0%	1.14	18"	**18"**	
224.0	225.0	5.7	7.4	1.0%	1.31	18"	**18"**	
225.0	228.0	11.5	15.0	1.0%	1.71	24"	**24"**	
228.0	230.0	12.5	16.3	1.0%	1.76	24"	**24"**	
230.0	235.0	16.0	20.8	1.0%	1.94	24"	**24"**	
231.0	235.0	2.5	3.3	1.0%	0.97	12"	**18**	18" COSD minimum Pipe size
232.0	235.0	4.0	5.2	1.0%	1.15	18"	**18"**	
235.0	265.0	20.0	26.0	1.0%	2.11	30"	**30"**	
246.0	255.0	6.0	7.8	1.0%	1.34	18"	**18"**	
254.0	255.0	3.3	4.3	1.0%	1.07	18"	**18"**	
255.0	256.0	9.3	12.1	1.0%	1.58	24"	**24"**	
258.0	258.1	2.0	2.6	1.0%	0.89	12"	**18**	18" COSD minimum Pipe size
257.0	258.1	1.0	1.3	1.0%	0.68	10"	**18**	18" COSD minimum Pipe size
258.1	259.0	4.5	5.9	1.0%	1.20	18"	**18"**	
259.0	262.0	14.9	19.4	1.0%	1.89	24"	**24"**	
262.0	263.0	17.6	22.9	1.0%	2.01	24"	**24"**	
263.0	265.0	19.3	25.0	1.0%	2.08	30"	**30"**	

Upstream Node	Downstream Node	Q_{100} (cfs[1])	Q_{100} with Sizing Factor (cfs[1])	Estimated Slope (%)	Minimum Pipe Size[2] (feet)	Recommended Pipe Size (inches)	Selected Pipe Size (inches)	Notes
265.0	267.0	39.6	51.5	1.0%	2.72	36"	**36"**	
267.0	269.0	41.8	54.3	1.0%	2.78	36"	**36"**	
269.0	295.0	41.8	54.3	1.0%	2.78	36"	**36"**	
292.0	295.0	39.6	51.5	1.0%	2.72	36"	**36"**	
295.0	298.0	80.0	104.0	1.0%	3.54	48"	**48"**	
282.0	284.0	1.5	2.0	1.0%	0.80	10"	**18**	18" COSD minimum Pipe size
283.0	284.0	1.5	2.0	1.0%	0.80	10"	**18**	18" COSD minimum Pipe size
284.0	285.0	3.0	3.9	1.0%	1.03	18"	**18**	
272.0	277.0	6.0	7.8	1.0%	1.34	18"	**18"**	
277.0	279.0	8.7	11.3	1.0%	1.54	24"	**24"**	
279.0	285.0	10.5	13.7	1.0%	1.65	24"	**24"**	
285.0	286.0	17.4	22.6	1.0%	2.00	24"	**24"**	
286.0	289.0	20.0	26.0	1.0%	2.11	30"	**30"**	
289.0	298.0	30.0	39.0	2.0%	2.15	30"	**30"**	
298.0	299.0	100.0	130.0	5.0%	2.85	36"	**36"**	Upsize pipe due to difficulty in accessing outfall

Upstream Node	Downstream Node	Q_{100} (cfs^1)	Q_{100} with Sizing Factor (cfs^1)	Estimated Slope (%)	Minimum Pipe Size^2 (feet)	Recommended Pipe Size (inches)	Selected Pipe Size (inches)	Notes
PA 11-14 (Basin 300)								
304.0	306.0	1.9	2.5	1.0%	0.87	12"	**18**	
306.0	308.0	3.2	4.2	1.0%	1.06	18"	**18"**	
308.0	310.0	4.7	6.1	1.0%	1.22	18"	**18"**	
310.0	312.0	6.2	8.1	1.0%	1.36	18"	**18"**	
312.0	319.0	7.7	10.0	1.0%	1.47	18"	**18"**	
314.0	318.0	6.4	8.3	1.0%	1.37	18"	**18"**	No Specific Hydrology (use DS Code - 8 to size upstream lines)
316.0	318.0	6.4	8.3	1.0%	1.37	18"	**18"**	No Specific Hydrology (use DS Code - 8 to size upstream lines)
318.0	319.0	6.4	8.3	1.0%	1.37	18"	**18"**	No Specific Hydrology (use DS Code - 8 to size upstream lines)
319.0	323.0	14.0	18.3	0.5%	2.10	30"	**30"**	Storm Drain Bucks Grade (use minimum slope)
323.0	331.0	19.0	24.7	0.5%	2.35	30"	**30"**	Flat slope to daylight due to grade buck
324.0	325.0	11.9	15.4	2.0%	1.52	24"	**24"**	No Specific Hydrology (use DS Code - 8 to size upstream lines)
325.0	330.0	11.9	15.5	2.0%	1.52	24"	**24"**	No Specific Hydrology (use DS Code - 8 to size upstream lines)
328.0	330.0	11.9	15.5	2.0%	1.52	24"	**24"**	No Specific Hydrology (use DS Code - 8 to size upstream lines)
330.0	331.0	11.9	15.5	2.0%	1.52	24"	**24"**	No Specific Hydrology (use DS Code - 8 to size upstream lines)
331.0	332.0	30.6	39.8	0.5%	2.81	36"	**36"**	Flat slope to daylight due to grade buck
332.0	337.0	33.5	43.6	0.5%	2.91	36"	**36"**	Flat slope to daylight due to grade buck
334.0	336.0	2.7	3.5	2.0%	0.87	12"	**12"**	No Specific Hydrology (use DS Code - 8 to size upstream lines)
336.0	337.0	2.7	3.5	2.0%	0.87	12"	**12"**	No Specific Hydrology (use DS Code - 8 to size upstream lines)
337.0	338.0	40.5	52.6	0.5%	3.12	42"	**42"**	No Specific Hydrology (use DS Vaule)
338.0	351.1	40.5	52.6	0.5%	3.12	42"	**42"**	Flat slope to daylight due to grade buck
339.2	340.0	4.1	5.4	1.0%	1.17	18"	**18"**	No Specific Hydrology (use DS Vaule)
340.0	342.0	4.1	5.4	1.0%	1.17	18"	**18"**	

Upstream Node	Downstream Node	Q_{100} (cfs[1])	Q_{100} with Sizing Factor (cfs[1])	Estimated Slope (%)	Minimum Pipe Size[2] (feet)	Recommended Pipe Size (inches)	Selected Pipe Size (inches)	Notes
342.0	344.0	8.4	10.9	1.0%	1.52	24"	**24"**	
344.0	346.0	11.8	15.3	1.0%	1.73	24"	**24"**	
346.0	349.0	15.5	20.2	1.0%	1.91	24"	**24"**	No Specific Hydrology (use DS Vaule)
348.0	349.0	7.8	10.2	1.0%	1.48	18"	**18"**	No Specific Hydrology (use DS Code - 8 to size upstream lines)
349.0	350.0	15.5	20.2	1.0%	1.91	24"	**24"**	No Specific Hydrology (use DS Vaule)
350.0	351.1	23.1	30.1	1.0%	2.22	30"	**30"**	
351.1	357.1	61.1	79.4	1.0%	3.20	42"	**42"**	
354.0	355.0	1.7	2.2	1.0%	0.84	10"	**10"**	
355.0	356.0	5.5	7.2	1.0%	1.30	18"	**18"**	
356.0	357.0	7.9	10.3	1.0%	1.49	18"	**18"**	
357.0	357.1	10.1	13.1	1.0%	1.63	24"	**24"**	
357.1	358.0	69.7	90.5	1.0%	3.36	42"	**42"**	
358.0	366.0	69.7	90.5	1.0%	3.36	42"	**42"**	
366.0	367.0	69.7	90.5	1.0%	3.36	42"	**42"**	
360.0	362.0	3.2	4.1	1.0%	1.05	18"	**18"**	
362.0	364.0	5.8	7.6	1.0%	1.32	18"	**18"**	
364.0	367.0	8.1	10.5	1.0%	1.50	18"	**18"**	
367.0	398.0	79.4	103.3	1.0%	3.53	48"	**48"**	
368.0	370.0	0.9	1.2	1.0%	0.66	8"	**8"**	
370.0	372.0	3.0	3.8	1.0%	1.03	18"	**18"**	
372.0	379.0	6.2	8.1	1.0%	1.36	18"	**18"**	
379.0	380.0	12.2	15.9	1.0%	1.75	24"	**24"**	
380.0	382.0	15.6	20.3	1.0%	1.92	24"	**24"**	
382.0	385.0	17.3	22.5	1.0%	2.00	24"	**24"**	
385.0	399.0	19.8	25.8	1.0%	2.10	30"	**30"**	

Upstream Node	Downstream Node	Q_{100} (cfs[1])	Q_{100} with Sizing Factor (cfs[1])	Estimated Slope (%)	Minimum Pipe Size[2] (feet)	Recommended Pipe Size (inches)	Selected Pipe Size (inches)	Notes
Beyer Blvd. (Basin 1400)								
1472.0	1474.0	3.6	4.7	2.0%	0.97	12"	**18"**	
1473.0	1474.0	4.1	5.3	2.0%	1.02	18"	**18"**	
1474.0	1475.0	7.7	10.0	2.0%	1.29	18"	**18"**	
1475.0	1475.5	10.3	13.4	3.0%	1.34	18"	**18"**	
1475.5	1476.0	0.0	0.0	3.0%	0.00	3"	**42**	These pipes run in parallel and have been sized for undetained Q100 Flow Rates out of BMP 3. Please refer to the Drainage exhibits for Context.
1476.1	1476.0	57.0	74.1	3.0%	2.54	36"	**36**	
1476.0	1477.0	57.8	75.1	3.0%	2.55	36"	**42**	Upsized for initial design, may be reduced later
1477.0	1478.0	59.2	77.0	3.0%	2.57	36"	**42**	Upsized for initial design, may be reduced later
1478.0	1479.0	59.8	77.7	5.0%	2.35	30"	**42**	Upsize to avoid telescoping
1479.0	1480.0	60.2	78.3	5.0%	2.35	30"	**42**	
1480.0	1481.0	60.7	78.9	5.0%	2.36	30"	**42**	
1481.0	1482.0	61.1	79.4	5.0%	2.37	30"	**42**	
1482.0	1483.0	61.5	80.0	5.0%	2.37	30"	**42**	
1483.0	1484.0	61.9	80.5	5.0%	2.38	30"	**42**	
1484.0	1485.0	61.9	80.5	5.0%	2.38	30"	**42**	
1485.0	BMP1400	62.4	81.1	5.0%	2.39	30"	**42**	
1490.0	1491.0	1.6	2.1	2.0%	0.72	10"	**18**	
1491.0	BMP1400	2.3	3.0	2.0%	0.82	10"	**18**	
1495.0	1496.0	46.0	59.8	3.0%	2.34	30"	**42**	Upsize to keep Outlet Pipe >= Inlet Pipe
1496.1	1496.0	10.9	14.2	2.0%	1.47	18"	**24**	Unknown Park grading Tributary area (up to 3ac) not included in Q. Pipe was upsized 6-inch due to uncertainty
1496.0	1499.0	48.7	63.3	5.0%	2.17	30"	**42**	Upsize to avoid telescoping

Upstream Node	Downstream Node	Q_{100} (cfs[1])	Q_{100} with Sizing Factor (cfs[1])	Estimated Slope (%)	Minimum Pipe Size[2] (feet)	Recommended Pipe Size (inches)	Selected Pipe Size (inches)	Notes
1430.0	1498.0	261.9	340.5	5.0%	4.08	54"	**54"**	
1453.1	1453.0	3.4	4.4	5.0%	0.80	10"	**18**	
1454.2	1454.1	6.8	8.8	5.0%	1.04	18"	**18"**	
1454.0	1454-culvert	18.3	23.8	5.0%	1.51	18"	**18"**	
1455.0	1498.0	20.1	26.1	5.0%	1.56	24"	**24"**	
1498.0	1499.0	275.9	358.7	5.0%	4.16	54"	**54"**	
1499.0	1499.1	335.6	436.3	2.6%	5.07	72"	**54**	Existing Beyer Road Storm Drain System. See AES pipeflow analysis for HGL calculation
1499.1	1499.2	347.0	451.1	5.2%	4.51	60"	**54**	Existing Beyer Road Storm Drain System. Includes estimated 11ac from 18" on Delany Drive. See AES pipeflow analysis.

Note:

1. "cfs" = cubic feet per second.

2. Minimum pipe sizes are calculated using the Manning's equation and are based on the flow rates with 30% factor to account for minor losses.

3. Refer to Drainage exhibit in MP2 for drainage node locations, Flow rates are based on Rational Method Hydrology in appendix B.

4. The Qs in this sizing table assumes the detained outflows from all detention basins. Some pipes have been upsized to convey undetained flows where the emergency overland overflow path (i.e. storm drain surcharging) is undesireable and could lead to damage to infrastructure.

HYDRAULIC ANALYSIS OF
EXISTING STORM DRAIN
BACKBONE ALONG BEYER BLVD.

I-805-1(82)1

DIST	COUNTY	ROUTE	POST MILE TOTAL PROJECT	SHEET NO.	TOTAL SHEETS
11	SD	805	0.5-3.7	1	385
	SD	75	4.6-5.4		

STATE OF CALIFORNIA
BUSINESS AND TRANSPORTATION AGENCY
DEPARTMENT OF PUBLIC WORKS
DIVISION OF HIGHWAYS

PROJECT PLANS FOR CONSTRUCTION ON
STATE HIGHWAY

IN SAN DIEGO COUNTY IN AND NEAR SAN DIEGO AND CHULA VISTA
ON ROUTE 805 FROM ROUTE 5 TO 3.2 MILES NORTH OF ROUTE 5 AND
ON ROUTE 75 FROM 0.5 MILE EAST TO 0.3 MILE WEST OF ROUTE 805

To be supplemented by Standard Plans dated January 1971

INDEX OF SHEETS

Sheet No. 1 Title Sheet
" " 2-3 Typical Cross Sections
" " 4 Standard Plans List
" " 5-21 Layout Plans
" " 22-45 Profiles and Superelevation Diagrams
" " 46-63 Grading and Drainage Plans
" " 64-96 Drainage Profiles
" " 97-105 Drainage and Channel Details (Note: NO SHEET 103)
" " 106-114 Drainage List
" " 115-118 Miscellaneous Construction Details
" " 119-120 Construction Notes
" " 121-134 Special Details
" " 135-152 Utility Plans
" " 153-172 Water and Sewer Relocations
" " 173-226 Lighting, Signal and Sign Plans
" " 227-249 Traffic Plans (Signs, Delineation, Markers)

BRIDGE PLANS

" " 250 Route 805/5 Separation (Existing) Br. No. 57-839L
" " 251-264 San Ysidro Blvd. U.C. Br. No. 57-776 R/L
" " 265-275 Hall Ave. Pedestrian O.C. Br. No. 57-864
" " 276-288 San Ysidro U.P. Br. No. 57-770
" " 289-304 North Vista Ave. O.C. Br. No. 57-773
" " 305-315 Route 75/805 Separation Br. No 57-777 R/L, QR
" " 316-324 Route 75/805 Separation Br. No. 57-777 QL
" " 325-344 Northeast Connector O.C. Br. No. 57-778
" " 345-354 Del Sol Blvd. U.C. Br. No. 57-854 R/L
" " 355-370 Palm Ave. O.C. Br. No. 57-775
" " 371-384 Otay River Bridge Br. No. 57-631 R/L
" " 385 Otay Valley Road U.C. (Existing) Br. No. 57-632 R/L

" " 1-171 Cross Sections

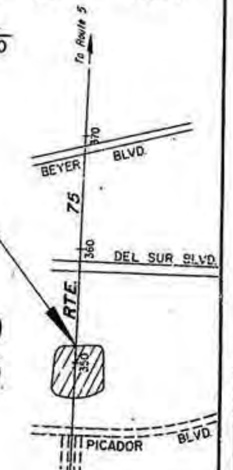

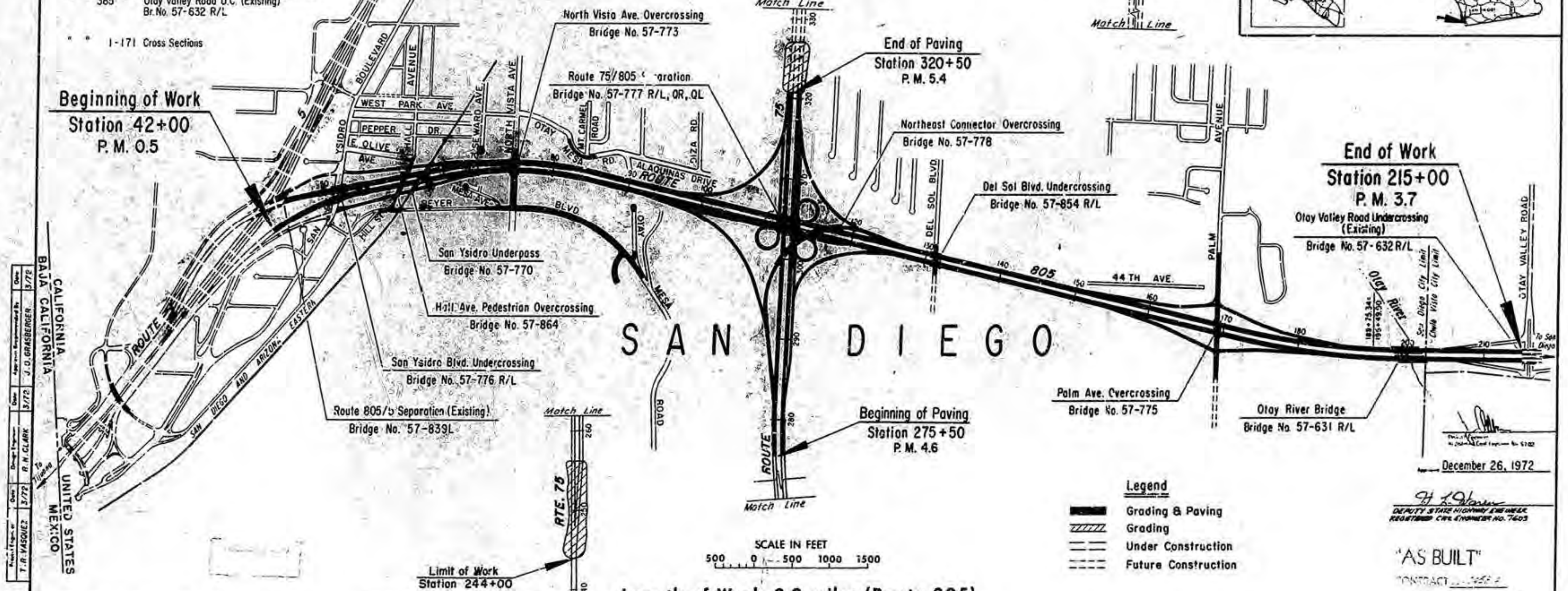

Legend
- ▬ Grading & Paving
- ▨ Grading
- Under Construction
- Future Construction

Length of Work-3.2 miles (Route 805)
Length of Work-0.8 mile (Route 75)

December 26, 1972

H. L. Warren
DEPUTY STATE HIGHWAY ENGINEER
REGISTERED CIVIL ENGINEER NO. 7603

"AS BUILT"
CONTRACT 11-0458 ...
AS COMPLETED ...

Contract No. 11-045814

Project Engineer	Design Engineer	Date
T. R. VASQUEZ	R. N. CLARK	3/72
J. O. GRABBERGER		3/72

Drawn by	Date
Checked by	Date

The detailed plans are a portion of the route for the State Highway adopted by the California Highway Commission on September 27, 1960 and June 29, 1965 and declared a FREEWAY by resolution of the California Highway Commission on September 27, 1960 and June 29, 1965.

AS BUILT PLANS
Contract No. 11-0458 ...
Date Completed ...
Document No. ...

11201 045811 /

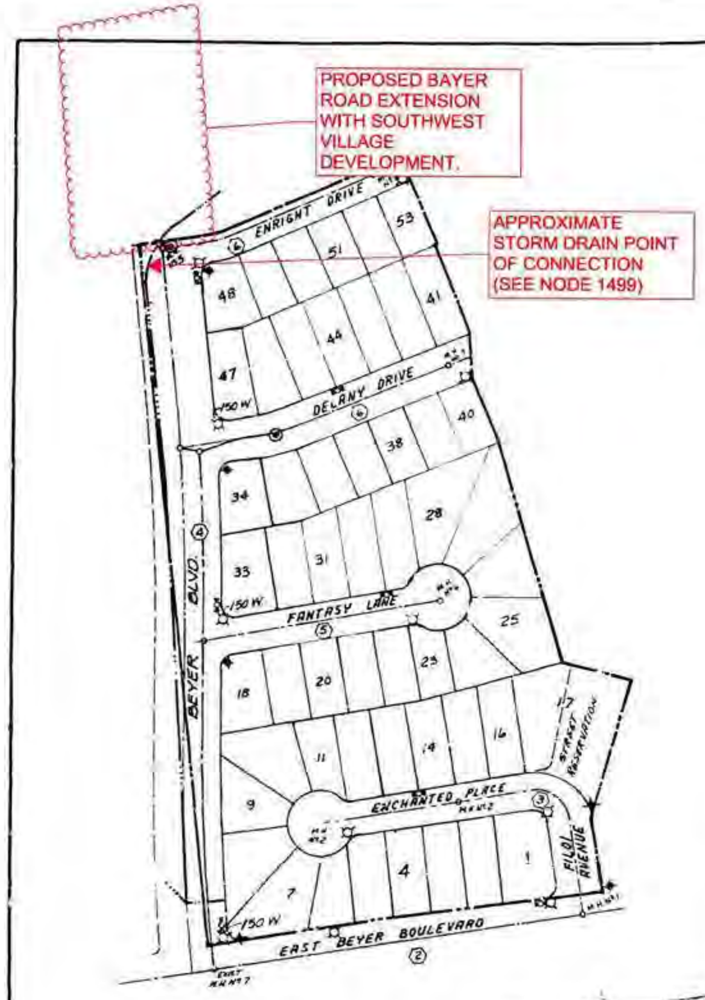

PROPOSED BAYER ROAD EXTENSION WITH SOUTHWEST VILLAGE DEVELOPMENT.

APPROXIMATE STORM DRAIN POINT OF CONNECTION (SEE NODE 1499)

SCALE 1" = 100'

- ◉ INDICATES CONTROL MONUMENTS
- ■ INDICATES STREET NAME SIGN
- INDICATES FIRE HYDRANT
- ☐ INDICATES STREET LIGHT SYSTEM
- INDICATES SEWER MAIN & MANHOLE
- INDICATES IMPROVEMENT PLAN SHEET NO.
- INDICATES STORM DRAIN

KEY MAP SYMBOLS

	A.D.T	
BEYER BOULEVARD	20,000	4" A.C. ON 10½" C.T.B
EAST BEYER BOULEVARD	10,000	4" A.C. ON 10½" C.T.B
ENCHANTED PLACE	CUL-DE-SAC	2" A.C. ON 5" C.T.B
FANTASY LANE	CUL-DE-SAC	2" A.C. ON 5" C.T.B
FILIO AVENUE	CUL-DE-SAC	2" A.C. ON 5" C.T.B
ENRIGHT DRIVE	LOCAL	2" A.C. ON 5" C.T.B
DELANY DRIVE	2000	2" A.C. ON 5" C.T.B

GENERAL NOTES

1. WHERE NEW UNDERGROUND CONNECTS TO EXISTING WORK IT SHALL BE THE RESPONSIBILITY OF THE CONTRACTOR TO DETERMINE THE LOCATIONS AND ELEVATION OF EXISTING WORK PRIOR TO EXCAVATION FOR NEW WORK AND TO CONNECT THE NEW WORK THERETO.
2. PRIOR TO MIXING WITH CEMENT AND WATER, ALL MINERAL AGGREGATE USED FOR THE PRODUCTION OF CEMENT TREATED BASE SHALL HAVE A SAND EQUIVALENT OF NOT LESS THAN 30, WHEN TESTED BY CALIFORNIA DIVISION OF HIGHWAYS TEST METHOD NUMBER CALIFORNIA 217.
3. CONTRACTORS MAKING ANY TYPE OF EXCAVATION ON THIS PROJECT AFTER ROUGH GRADE AND PRIOR TO FINISH GRADE SHALL REMOVE FROM THE SITE OR TO AREA DESIGNATED BY ENGINEER OF WORK, ALL EXCAVATION MATERIAL EXCEPT THAT USED AS COMPACTED BACKFILL IN SUCH EXCAVATION.
4. THE CONTRACTOR SHALL VERIFY THE LOCATION OF AND PROTECT ALL EXISTING IMPROVEMENTS BEFORE AND DURING CONSTRUCTION.
5. TOP OF STORM DRAIN BOXES SHALL BE CONSTRUCTED CONCURRENT WITH ADJOINING CURBS AND GUTTERS.
6. ALL STRUCTURES IN STREET RIGHT OF WAY SHALL BE KEPT AT LEAST 12" BELOW FINISH GRADE UNTIL CURBS, SIDEWALK AND PAVEMENT ARE INSTALLED AND SHALL THEN BE ADJUSTED TO FINISH GRADE.
7. PROVIDE ADEQUATE PROTECTION - CRASH POST, TYPE "G" CURB - PEDESTAL, FOR FIRE HYDRANTS IN ROLLED CURB AREAS - SEE DETAIL. FLANGE SHALL BE ABOVE PEDESTAL.
8. ENGINEER'S GRADE STAKES SHALL BE PROVIDED ON PARTIAL WIDTH STREETS BEFORE PAVING BEGINS.
9. ELECTRICAL & TELEPHONE SERVICE FACILITIES SHALL BE INSTALLED UNDERGROUND IN ACCORDANCE WITH SECTION 102.0404 OF THE MUNICIPAL CODE AND SUBDIVISION BOARD RESOLUTION NO. 264.
THERE ARE EXISTING 12 KVA OVERHEAD LINES ALONG WESTERN EDGE THIS SUBDIVISION TO BE UNDERGROUNDED.
10. ALL UNDERGROUND UTILITIES & LATERALS TO BE INSTALLED BEFORE CONSTRUCTION OF CURBS OR CONCRETE CROSS-GUTTERS OR SURFACING OF STREETS.
11. CONTRACTOR SHALL VERIFY LOCATIONS OF DRIVEWAYS AND SHALL CONSTRUCT DRIVEWAY DEPRESSION CONCURRENT WITH CURB CONSTRUCTION FOR EACH LOT. STANDARD DRAWING NUMBERS G-14, G-16, G-15

WATER AND SEWER NOTES

1. THE WATER AND SEWER FACILITIES SHOWN ON THESE PLANS SHALL BE CONSTRUCTED IN ACCORDANCE WITH THE REQUIREMENTS OF THE WATER UTILITIES DIRECTOR.
2. EACH BUILDING SHALL RECEIVE A 1-INCH WATER SERVICE AND 4-INCH SEWER HOUSE CONNECTION. LOCATION TO BE DETERMINED IN THE FIELD BY THE ENGINEER OF WORK. THE "AS BUILT" LOCATIONS SHALL BE SHOWN ON THESE PLANS AND THE SEWER LATERAL TABLE COMPLETED PRIOR TO ACCEPTANCE OF THE WATER AND SEWER FACILITIES.
3. WATER SERVICES, SEWER LATERALS AND FIRE HYDRANT SERVICES ARE TO BE INSTALLED IN ACCORDANCE WITH THE STANDARD DRAWINGS. THE LOCATION OF WATER AND SEWER FACILITIES SHOWN ON THESE PLANS SHALL TAKE PRECEDENCE IN CASE OF CONFLICTS WITH OTHER UTILITIES NOT SHOWN HEREON.
4. SUBSTITUTION OF MATERIALS FOR CONSTRUCTION OF WATER AND SEWER FACILITIES WILL NOT BE ALLOWED UNLESS APPROVED BY THE WATER UTILITIES DIRECTOR.
5. LOCATE WATER SERVICES AND SEWER HOUSE CONNECTIONS OUT OF DRIVEWAYS. THE SEWER HOUSE CONNECTION SHALL BE A MINIMUM 5' DISTANCE DOWNSTREAM FROM THE WATER SERVICE.
6. WHERE SEWER LATERALS CROSS THE CURB LINE, A LETTER "S" SHALL BE STAMPED OR CHISELED IN THE CURB FACE (1-1/2-INCHES HIGH AND 3/16-INCHES DEEP).
7. COVER OVER WATER MAIN IS TO BE 3' UNLESS OTHER IS CALLED OUT. IF OVER 5' OF COVER AND LESS THAN 2.5', A.C. MAIN IS NOT ACCEPTABLE.
8. SEWER LATERALS ARE TO BE SPACED SO THERE IS ONLY ONE CONNECTION IN ANY ONE PIPE LENGTH. DOUBLE WYES ARE NOT TO BE USED.
9. OPEN ENDS OF ALL SEWER MAINS AND SEWER LATERALS SHALL BE PLUGGED WITH PVC PLUGS
10. ALL LATERALS WITH LESS THAN 4-FOOT COVER TO INVERT BE CONCRETE ENCASED.
11. ALL SEWER MAINS AND LATERALS SHALL BE CONSTRUCTED IN ACCORDANCE WITH THE CURRENT SEWER AGENCY AND STREET AGENCY STANDARDS FOR SEWER CONSTRUCTION AND SAID STANDARDS WILL GOVERN ALL SEWER TRENCH BACKFILL.
12. SUBSTITUTION OF MATERIALS FOR CONSTRUCTION OF WATER AND SEWER FACILITIES SHALL NOT BE ALLOWED UNLESS APPROVED BY THE WATER UTILITIES DIRECTOR.
13. ALL WATER MAINS SHALL BE CLASS 150 UNLESS OTHERWISE NOTED.
14. ALL MANHOLE COVERS, GATE VALVE COVERS AND STREET MONUMENTS SHALL BE ADJUSTED TO FINISH GRADE. (NEW OR EXISTING).
15. PRESSURE REGULATORS REQUIRED ON WATER SERVICES.
16. BYPASS REQUIRED ON 12" AND 16" GATE VALVES.

TELEPHONE, GAS & ELECTRIC NOTES

1. NOTICE: ALL TELEPHONE SERVICES WITH THIS SUBDIVISION ARE "UNDERGROUND INSTALLATION". FOR LOCATION OF CABLES AND APPURTENANCES CONTACT THE PACIFIC TELEPHONE & TELEGRAPH CO.
2. NOTICE: ALL ELECTRICAL AND GAS SERVICES WITHIN THIS SUBDIVISION ARE "UNDERGROUND INSTALLATION". FOR LOCATION OF ELECTRICAL CABLES AND GAS PIPING AND APPURTENANCES, CONTACT SAN DIEGO GAS & ELECTRIC COMPANY.

STREET LIGHT NOTES

1. CONTRACTOR INSTALLING THE STREET LIGHTING DISTRIBUTION SYSTEM SHALL NOTIFY FIELD ENGINEER, , PHONE 236-5520 A MINIMUM OF 3 DAYS BEFORE BEGINNING OF WORK FOR APPROVAL OF CONDUIT LOCATION AND REQUIREMENTS.
2. CONTRACTOR SHALL VERIFY ALL STREET LIGHTS ARE BURNING AND NOTIFY FIELD ENGINEER, , PHONE 236-5520 A MINIMUM OF 4 WEEKS AFTER FINAL ELECTRICAL INSPECTION.

8 9500 LUMEN 100 WATT TYPE III HIGH PRESSURE SODIUM VAPOR WITH CUTOFF FIXTURE

3 16000 LUMEN 150 WATT TYPE III HIGH PRESSURE SODIUM VAPOR WITH CUTOFF FIXTURE AND TYPE XV STEEL STANDARD

SOILS REPORT

WILLIAM S. KROOSKOS & ASSOCIATES
REPORT DATED JULY 21, 1977
PROJECT NO. 77-5343

STORM DRAIN ALTERNATES

ALTERNATE NO.1: ASBESTOS CEMENT DRAIN PIPE, SPECIAL PROVISION P-21 SHALL GOVERN (A C P SHALL BE 2000-D)

ALTERNATE NO.2 CAST IN PLACE CONCRETE PIPE, SPECIAL PROVISION P-16 SHALL GOVERN

REFERENCE DRAWINGS

OTAY MESA SEWER AND SAN YSIDRO SCHOOL DISTRICT WATER MAIN DWGS.: 16864-1-D, 16864-2-D, AND 16864-3-D

WATER CONNECTIONS

CONNECTION NO 1 - $2000.00

SITE DEVELOPMENT

GRADING - SHEETS 9 & 10
LANDSCAPING - SHEETS 9 & 11
IRRIGATION - SHEETS 9 & 11
EXCAVATION = 24,500 C.Y.
EMBANKMENT = 150,000 C.Y.
(IMPORT) = 125,500 C.Y.

WORK TO BE DONE

The Improvements consist of the following work to be done according to these plans and the Specifications and Standard Drawings of the City of San Diego.

SPECIFICATIONS

(1) Green Book Standard Specifications (1976 Ed.) Document No. 755163 filed May 10, 1976, and
(2) City of San Diego Standard Special Provisions, Document No. 756403, filed February 25, 1977.

STANDARD DRAWINGS

(1) City of San Diego Standard Drawings (1977 Ed.) Document No. 758672 filed March 21, 1977, and
(2) ( )* Denotes City of San Diego Standard Drawing per Document No. 735691, filed April 26, 1971.

IMPROVEMENTS	STD. DWG. NO.	SYMBOL
A.C. PAVEMENT	(G-58)* (G-59-T)*	
TYPE "G" CURB	G-2	
PAVEMENT CUTOFF WALL	G-22	
CROSS GUTTER	G-12	
SIDEWALK	G 7	
PEDESTRIAN RAMP	SDG-101	
A.C. BERM	G-5	6" B-1
CONTROL MONUMENT (3)	(M-21-T)*	◉
DRIVEWAY	G-14	
2" A.C.		☒
SEWER MAIN	S-4, S-5	8" P.V.C.
SEWER CONCRETE MANHOLE (JOHNS-MANVILLE)	S-1, M-3 (SEE DETAIL SHT 3)	M.H.
4" P.V.C. SEWER HOUSE CONNECTION	S-13	Ⓢ
CONCRETE CRADLE FOR SEWERS	S-6	
CUT OFF WALL	S-10	
WATER MAIN (TYLER FITTINGS JOHNS-MANVILLE)	W 21, W-17, W-18, W-20	8" A.C.
1" COPPER WATER SERVICE	(W-2)*, W-15-A2, (W-27)*	Ⓦ
GATE VALVE AND BOX W/BYPASS 12" & 16" G.V.	SDW 109, W-19-A, W-12-B, (W-26)*	8" G.V.
GATE VALVE COVER ONLY	I-27	
FIRE HYDRANT ASSEMBLY	W-10, W-11-A	F.H.
BLOW OFF ASSEMBLY	SDW-102	B.O.
MULTI SERVICE FITTING	(W-60)*	
2" AIR VALVE	(W-13)*	2" A.V.
STORM DRAIN	D-60	
CURB INLET TYPE B, B-1	D-2	
GRAVITY HEADWALL	D-32	
STORM DRAIN CLEAN OUT	D-9, D-10	
CONCRETE LUG	D-63	
WING TYPE HEADWALL	D-35	
CURB OUTLET A & B	D-25	
STREET NAME SIGN	SDM-102, SDM-103	■
STREET LIGHT SYSTEM	E-1, E-2, E-4	
BARRICADES AND GUARD POST	M-9	

MAINTAINING TRAFFIC. THE CONTRACTOR SHALL MAINTAIN ONE LANE OF TRAFFIC IN EACH DIRECTION DURING WORKING HOURS OF 8:30 AM TO 3:30 PM AND SHALL MAINTAIN FULL WIDTH OF TRAVEL LANES OF EXISTING ROADWAY DURING THE HOURS OF 3:30 PM AND 8:30 AM. ON SATURDAY, SUNDAY, AND DESIGNATED LEGAL HOLIDAYS, AND WHEN CONSTRUCTION OPERATIONS ARE NOT ACTIVELY IN PROGRESS ON WORKING DAYS THE CONTRACTOR SHALL MAINTAIN ALL TRAVEL LANES OF THE ROADWAY. ANY DEVIATION OF THESE REQUIREMENTS SHALL BE IN ACCORDANCE WITH SECTION 7-10.3 OF THE STANDARD SPECIFICATIONS.

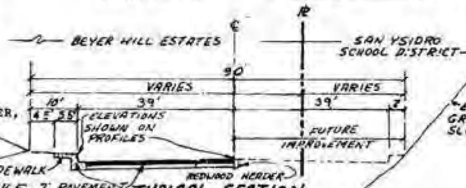

TYPICAL SECTION BEYER BOULEVARD
NO SCALE

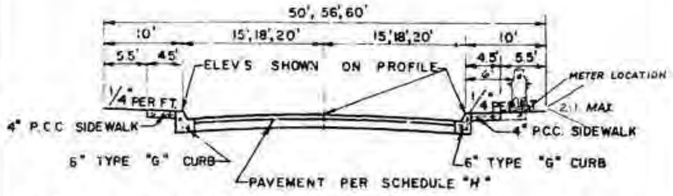

ALL INTERIOR TYPICAL STREET SECTION (NOT TO SCALE)

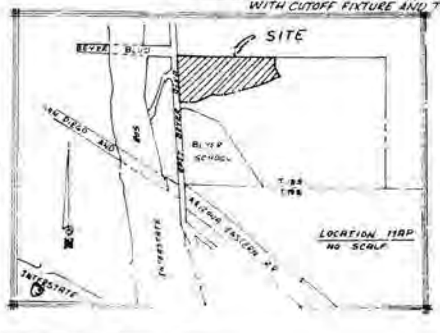

LOCATION MAP
NO SCALE

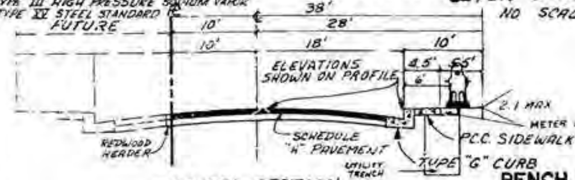

TYPICAL SECTION
BOUNDARY ENRIGHT DRIVE
NO SCALE

TYPICAL SECTION EAST BEYER BLVD.
NO SCALE

THESE PLANS ARE NOT TO BE USED FOR CONSTRUCTION UNTIL THE NOTICE TO PROCEED OR A BONDED SUBDIVISION PERMIT HAS BEEN ISSUED BY THE CITY ENGINEER.

BENCH MARK

CITY OF SAN DIEGO BENCH MARK
[illegible]

"AS BUILT"
DATE:

PRIVATE CONTRACT
ENGINEER OF WORK
ASSOCIATED ENGINEERS
3904 GROTON STREET
SAN DIEGO, CALIF. 92110
PHONE (714) 224-2467
RCE 25900
DATE 22 Sept 1978

PLANS FOR THE PUBLIC IMPROVEMENTS
IN AND ADJOINING
BEYER HILL ESTATES

CITY OF SAN DIEGO, CALIFORNIA
SHEET 1 OF 11 SHEETS
T.M. 77-215
W.O. NO. 70772
C.R. Lockhart 12-4-78
Jim Mueller 12-6-78

DESCRIPTION	BY	APPROVED	DATE	FILMED
ORIGINAL				
AS BUILT	APEC			

8-25-78
CONTROL
142-1755
LAMBERT COORDINATES
CONTRACTOR GEN-HALL
INSPECTOR CC ERA/STAFF
DATE STARTED 9-16-79
DATE COMPLETED 12-28-80
17793-1-D

1131

DATUM IS BELIEVED TO BE NGVD29. PLANS DATE = 1979

ALL ELEVATIONS ON THIS SHEET (CALCULATED AND ORIGINAL) ARE IN NGVD29

ELEVATIONS TO BE SHIFTED UPWARDS 2.3 FT FOR NAVD88

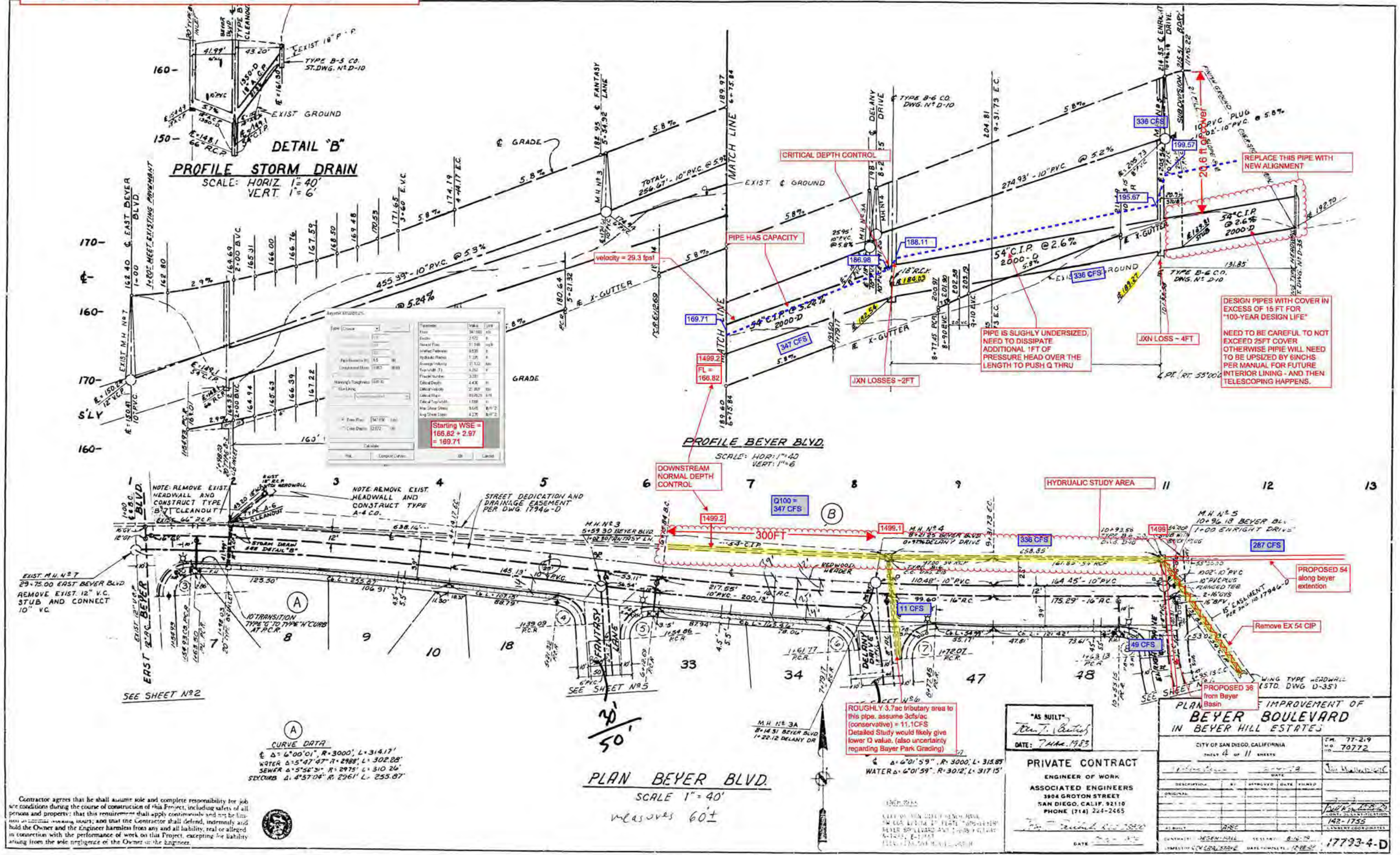

Starting WSE = 166.82 + 2.97 = 169.71

velocity = 29.3 fps!

169.71

1499.2

FL = 166.82

PIPE HAS CAPACITY

347 CFS

CRITICAL DEPTH CONTROL

186.98

188.11

JXN LOSSES ~2FT

PIPE IS SLIGHLY UNDERSIZED, NEED TO DISSIPATE ADDITIONAL 1FT OF PRESSURE HEAD OVER THE LENGTH TO PUSH Q THRU

336 CFS

195.67

199.57

20.6 ft of cover

REPLACE THIS PIPE WITH NEW ALIGNMENT

JXN LOSS ~ 4FT

DESIGN PIPES WITH COVER IN EXCESS OF 15 FT FOR "100-YEAR DESIGN LIFE"

NEED TO BE CAREFUL TO NOT EXCEED 25FT COVER OTHERWISE PIPIE WILL NEED TO BE UPSIZED BY 6INCHS PER MANUAL FOR FUTURE INTERIOR LINING - AND THEN TELESCOPING HAPPENS.

DOWNSTREAM NORMAL DEPTH CONTROL

Q100 = 347 CFS

1499.2

300FT

1499.1

HYDRUALIC STUDY AREA

1499

336 CFS

287 CFS

PROPOSED 54 along beyer extention

11 CFS

Remove EX 54 CIP

49 CFS

PROPOSED 36 from Beyer Basin

ROUGHLY 3.7ac tributary area to this pipe. assume 3cfs/ac (conservative) = 11.1CFS Detailed Study would likely give lower Q value. (also uncertainty regarding Bayer Park Grading)

Contractor agrees that he shall assume sole and complete responsibility for job site conditions during the course of construction of this Project, including safety of all persons and property; that this requirement shall apply continuously and not be limited to normal working hours; and that the Contractor shall defend, indemnify and hold the Owner and the Engineer harmless from any and all liability, real or alleged in connection with the performance of work on this Project, excepting for liability arising from the sole negligence of the Owner or the Engineer.

APPENDIX F

Detention Analysis

```
1****************************************                                                   ***************************************
 *                                       *                                                   *                                     *
 *   FLOOD HYDROGRAPH PACKAGE  (HEC-1)   *                                                   *    U.S. ARMY CORPS OF ENGINEERS     *
 *               JUN   1998              *                                                   *    HYDROLOGIC ENGINEERING CENTER    *
 *            VERSION 4.1                *                                                   *          609 SECOND STREET          *
 *                                       *                                                   *       DAVIS, CALIFORNIA 95616       *
 *  RUN DATE   06JUL20  TIME  16:44:53   *                                                   *           (916) 756-1104            *
 *                                       *                                                   *                                     *
 ****************************************                                                   ***************************************
```

Detention Routing
Calculation for Basin 100

```
                                                 X     X  XXXXXXX   XXXXX           X
                                                 X     X  X        X     X         XX
                                                 X     X  X        X                X
                                                 XXXXXXX  XXXX     X        XXXXX   X
                                                 X     X  X        X                X
                                                 X     X  X        X     X          X
                                                 X     X  XXXXXXX   XXXXX          XXX




            THIS PROGRAM REPLACES ALL PREVIOUS VERSIONS OF HEC-1 KNOWN AS HEC1 (JAN 73), HEC1GS, HEC1DB, AND HEC1KW.

            THE DEFINITIONS OF VARIABLES -RTIMP- AND -RTIOR- HAVE CHANGED FROM THOSE USED WITH THE 1973-STYLE INPUT STRUCTURE.
            THE DEFINITION OF -AMSKK- ON RM-CARD WAS CHANGED WITH REVISIONS DATED 28 SEP 81. THIS IS THE FORTRAN77 VERSION
            NEW OPTIONS: DAMBREAK OUTFLOW SUBMERGENCE , SINGLE EVENT DAMAGE CALCULATION, DSS:WRITE STAGE FREQUENCY,
            DSS:READ TIME SERIES AT DESIRED CALCULATION INTERVAL   LOSS RATE:GREEN AND AMPT INFILTRATION
            KINEMATIC WAVE: NEW FINITE DIFFERENCE ALGORITHM


1                                                       HEC-1 INPUT                                                     PAGE  1

           LINE           ID.......1.......2.......3.......4.......5.......6.......7.......8.......9......10

 *** FREE ***
                          *DIAGRAM
              1           ID   SOUTH OTAY VTM; J-15013-C
              2           ID   PRELIMINARY DETENTION ANALYSIS FOR BASIN 1
              3           ID   FEBRUARY 28, 2019 - FILE NAME: SWV1HD00.hc1
              4           IT       1 01JAN90    1200     300
              5           IO       5       0
                          *

              6           KKSWVHD100.hc1
              7           KM   RUN DATE   7/6/2020
              8           KM   RATIONAL METHOD HYDROGRAPH PROGRAM
              9           KM   COPYRIGHT 1992, 2014, RICK ENGINEERING COMPANY
             10           KM   6HR RAINFALL IS 2 INCHES
             11           KM   RATIONAL METHOD RUNOFF COEFFICIENT IS 0.77
             12           KM   RATIONAL METHOD TIME OF CONCENTRATION IS 13 MIN.
             13           KM   FOR THIS DATA TO RUN PROPERLY THIS IT CARD MUST BE ADDED TO YOUR HEC-1
             14           KM   IT 2 01JAN90 1200 200
             15           BA  0.0084
             16           IN      13 01JAN90    1147
             17           QI       0       0     0.5     0.5     0.5     0.6     0.6     0.6     0.7     0.7
             18           QI     0.7     0.8     0.9     0.9     1.1     1.1     1.4     1.6     2.3     0.9
             19           QI    14.2     1.9     1.3       1     0.8     0.7     0.6     0.6     0.5       0
             20           QI       0       0       0       0       0       0       0       0       0       0
             21           QI
                          *

             22           KK    DET1
             23           KO       2       2       0       0      21
             24           KM   BMP 1
             25           RS       1    STOR      -1
             26           SV       0   0.424   0.425   0.426
             27           SQ       0     4.6     7.1     8.7
             28           SE     100     101     102     103
                          *
             29           ZZ
1
                 SCHEMATIC DIAGRAM OF STREAM NETWORK
 INPUT
  LINE      (V) ROUTING          (--->) DIVERSION OR PUMP FLOW

   NO.      (.) CONNECTOR        (<---) RETURN OF DIVERTED OR PUMPED FLOW

     6    SWVHD100
                 V
                 V
```

```
   22       DET1

 (***) RUNOFF ALSO COMPUTED AT THIS LOCATION
1*****************************************                                            ***************************************
 *                                       *                                            *                                     *
 *   FLOOD HYDROGRAPH PACKAGE  (HEC-1)   *                                            *    U.S. ARMY CORPS OF ENGINEERS     *
 *              JUN   1998               *                                            *    HYDROLOGIC ENGINEERING CENTER    *
 *           VERSION 4.1                 *                                            *          609 SECOND STREET          *
 *                                       *                                            *       DAVIS, CALIFORNIA 95616       *
 *  RUN DATE   06JUL20  TIME  16:44:53   *                                            *           (916) 756-1104            *
 *                                       *                                            *                                     *
 *****************************************                                            ***************************************




                          SOUTH OTAY VTM; J-15013-C
                          PRELIMINARY DETENTION ANALYSIS FOR BASIN 1
                          FEBRUARY 28, 2019 - FILE NAME: SWV1HD00.hc1

   5 IO         OUTPUT CONTROL VARIABLES
                      IPRNT          5  PRINT CONTROL
                      IPLOT          0  PLOT CONTROL
                      QSCAL         0.  HYDROGRAPH PLOT SCALE

     IT         HYDROGRAPH TIME DATA
                       NMIN          1  MINUTES IN COMPUTATION INTERVAL
                      IDATE     1JAN90  STARTING DATE
                      ITIME       1200  STARTING TIME
                         NQ        300  NUMBER OF HYDROGRAPH ORDINATES
                     NDDATE     1JAN90  ENDING DATE
                     NDTIME       1659  ENDING TIME
                      ICENT         19  CENTURY MARK

                COMPUTATION INTERVAL     .02 HOURS
                     TOTAL TIME BASE    4.98 HOURS

         ENGLISH UNITS
              DRAINAGE AREA         SQUARE MILES
              PRECIPITATION DEPTH   INCHES
              LENGTH, ELEVATION     FEET
              FLOW                  CUBIC FEET PER SECOND
              STORAGE VOLUME        ACRE-FEET
              SURFACE AREA          ACRES
              TEMPERATURE           DEGREES FAHRENHEIT



 *** *** *** *** *** *** *** *** *** *** *** *** *** *** *** *** *** *** *** *** *** *** *** *** *** *** *** *** *** *** *** *** ***


           **************
           *            *
  22 KK    *      DET1  *
           *            *
           **************

  23 KO         OUTPUT CONTROL VARIABLES
                      IPRNT          2  PRINT CONTROL
                      IPLOT          2  PLOT CONTROL
                      QSCAL         0.  HYDROGRAPH PLOT SCALE
                      IPNCH          0  PUNCH COMPUTED HYDROGRAPH
                       IOUT         21  SAVE HYDROGRAPH ON THIS UNIT
                      ISAV1          1  FIRST ORDINATE PUNCHED OR SAVED
                      ISAV2        300  LAST ORDINATE PUNCHED OR SAVED
                     TIMINT       .017  TIME INTERVAL IN HOURS

                          BMP 1

              HYDROGRAPH ROUTING DATA

  25 RS         STORAGE ROUTING
                      NSTPS          1  NUMBER OF SUBREACHES
                       ITYP       STOR  TYPE OF INITIAL CONDITION
                     RSVRIC      -1.00  INITIAL CONDITION
                          X        .00 WORKING R AND D COEFFICIENT

  26 SV           STORAGE          .0        .4        .4        .4

  27 SQ         DISCHARGE          0.        5.        7.        9.

  28 SE         ELEVATION      100.00    101.00    102.00    103.00
```

```
                                                                          ***

*** WARNING *** MODIFIED PULS ROUTING MAY BE NUMERICALLY UNSTABLE FOR OUTFLOWS BETWEEN        5. TO        9.
                THE ROUTED HYDROGRAPH SHOULD BE EXAMINED FOR OSCILLATIONS OR OUTFLOWS GREATER THAN PEAK INFLOWS.
                THIS CAN BE CORRECTED BY DECREASING THE TIME INTERVAL OR INCREASING STORAGE (USE A LONGER REACH.)

*******************************************************************************************************************

                                                 HYDROGRAPH AT STATION     DET1

*******************************************************************************************************************
                                           *                                       *
 DA MON HRMN ORD  OUTFLOW  STORAGE    STAGE * DA MON HRMN ORD  OUTFLOW  STORAGE    STAGE * DA MON HRMN ORD  OUTFLOW  STORAGE    STAGE
                                           *                                       *
  1 JAN 1200   1       0.       .0   100.0 *  1 JAN 1340 101       0.       .0   100.1 *  1 JAN 1520 201       1.       .1   100.2
  1 JAN 1201   2       0.       .0   100.0 *  1 JAN 1341 102       0.       .0   100.1 *  1 JAN 1521 202       1.       .1   100.2
  1 JAN 1202   3       0.       .0   100.0 *  1 JAN 1342 103       0.       .0   100.1 *  1 JAN 1522 203       1.       .1   100.2
  1 JAN 1203   4       0.       .0   100.0 *  1 JAN 1343 104       0.       .0   100.1 *  1 JAN 1523 204       1.       .1   100.2
  1 JAN 1204   5       0.       .0   100.0 *  1 JAN 1344 105       0.       .0   100.1 *  1 JAN 1524 205       1.       .1   100.2
  1 JAN 1205   6       0.       .0   100.0 *  1 JAN 1345 106       0.       .0   100.1 *  1 JAN 1525 206       1.       .1   100.2
  1 JAN 1206   7       0.       .0   100.0 *  1 JAN 1346 107       0.       .0   100.1 *  1 JAN 1526 207       1.       .1   100.2
  1 JAN 1207   8       0.       .0   100.0 *  1 JAN 1347 108       0.       .0   100.1 *  1 JAN 1527 208       1.       .1   100.2
  1 JAN 1208   9       0.       .0   100.0 *  1 JAN 1348 109       0.       .0   100.1 *  1 JAN 1528 209       1.       .1   100.2
  1 JAN 1209  10       0.       .0   100.0 *  1 JAN 1349 110       0.       .0   100.1 *  1 JAN 1529 210       1.       .1   100.2
  1 JAN 1210  11       0.       .0   100.0 *  1 JAN 1350 111       0.       .0   100.1 *  1 JAN 1530 211       1.       .1   100.2
  1 JAN 1211  12       0.       .0   100.0 *  1 JAN 1351 112       0.       .0   100.1 *  1 JAN 1531 212       1.       .1   100.2
  1 JAN 1212  13       0.       .0   100.0 *  1 JAN 1352 113       0.       .0   100.1 *  1 JAN 1532 213       1.       .1   100.2
  1 JAN 1213  14       0.       .0   100.0 *  1 JAN 1353 114       0.       .0   100.1 *  1 JAN 1533 214       1.       .1   100.2
  1 JAN 1214  15       0.       .0   100.0 *  1 JAN 1354 115       0.       .0   100.1 *  1 JAN 1534 215       1.       .1   100.2
  1 JAN 1215  16       0.       .0   100.0 *  1 JAN 1355 116       1.       .0   100.1 *  1 JAN 1535 216       1.       .1   100.2
  1 JAN 1216  17       0.       .0   100.0 *  1 JAN 1356 117       1.       .0   100.1 *  1 JAN 1536 217       1.       .1   100.2
  1 JAN 1217  18       0.       .0   100.0 *  1 JAN 1357 118       1.       .0   100.1 *  1 JAN 1537 218       1.       .1   100.2
  1 JAN 1218  19       0.       .0   100.0 *  1 JAN 1358 119       1.       .0   100.1 *  1 JAN 1538 219       1.       .1   100.2
  1 JAN 1219  20       0.       .0   100.0 *  1 JAN 1359 120       1.       .0   100.1 *  1 JAN 1539 220       1.       .1   100.2
  1 JAN 1220  21       0.       .0   100.0 *  1 JAN 1400 121       1.       .0   100.1 *  1 JAN 1540 221       1.       .1   100.2
  1 JAN 1221  22       0.       .0   100.0 *  1 JAN 1401 122       1.       .0   100.1 *  1 JAN 1541 222       1.       .1   100.3
  1 JAN 1222  23       0.       .0   100.0 *  1 JAN 1402 123       1.       .0   100.1 *  1 JAN 1542 223       1.       .1   100.3
  1 JAN 1223  24       0.       .0   100.0 *  1 JAN 1403 124       1.       .0   100.1 *  1 JAN 1543 224       1.       .1   100.3
  1 JAN 1224  25       0.       .0   100.0 *  1 JAN 1404 125       1.       .0   100.1 *  1 JAN 1544 225       1.       .1   100.3
  1 JAN 1225  26       0.       .0   100.0 *  1 JAN 1405 126       1.       .0   100.1 *  1 JAN 1545 226       1.       .1   100.3
  1 JAN 1226  27       0.       .0   100.0 *  1 JAN 1406 127       1.       .0   100.1 *  1 JAN 1546 227       1.       .1   100.3
  1 JAN 1227  28       0.       .0   100.0 *  1 JAN 1407 128       1.       .0   100.1 *  1 JAN 1547 228       1.       .1   100.3
  1 JAN 1228  29       0.       .0   100.0 *  1 JAN 1408 129       1.       .1   100.1 *  1 JAN 1548 229       1.       .1   100.3
  1 JAN 1229  30       0.       .0   100.0 *  1 JAN 1409 130       1.       .1   100.1 *  1 JAN 1549 230       1.       .1   100.3
  1 JAN 1230  31       0.       .0   100.0 *  1 JAN 1410 131       1.       .1   100.1 *  1 JAN 1550 231       1.       .1   100.3
  1 JAN 1231  32       0.       .0   100.0 *  1 JAN 1411 132       1.       .1   100.1 *  1 JAN 1551 232       1.       .1   100.3
  1 JAN 1232  33       0.       .0   100.0 *  1 JAN 1412 133       1.       .1   100.1 *  1 JAN 1552 233       1.       .1   100.3
  1 JAN 1233  34       0.       .0   100.0 *  1 JAN 1413 134       1.       .1   100.1 *  1 JAN 1553 234       1.       .1   100.3
  1 JAN 1234  35       0.       .0   100.0 *  1 JAN 1414 135       1.       .1   100.1 *  1 JAN 1554 235       1.       .1   100.3
  1 JAN 1235  36       0.       .0   100.0 *  1 JAN 1415 136       1.       .1   100.1 *  1 JAN 1555 236       1.       .1   100.3
  1 JAN 1236  37       0.       .0   100.0 *  1 JAN 1416 137       1.       .1   100.1 *  1 JAN 1556 237       1.       .1   100.3
  1 JAN 1237  38       0.       .0   100.0 *  1 JAN 1417 138       1.       .1   100.1 *  1 JAN 1557 238       1.       .1   100.3
  1 JAN 1238  39       0.       .0   100.0 *  1 JAN 1418 139       1.       .1   100.1 *  1 JAN 1558 239       1.       .1   100.3
  1 JAN 1239  40       0.       .0   100.0 *  1 JAN 1419 140       1.       .1   100.1 *  1 JAN 1559 240       1.       .1   100.3
  1 JAN 1240  41       0.       .0   100.0 *  1 JAN 1420 141       1.       .1   100.1 *  1 JAN 1600 241       1.       .1   100.3
  1 JAN 1241  42       0.       .0   100.0 *  1 JAN 1421 142       1.       .1   100.1 *  1 JAN 1601 242       2.       .1   100.3
  1 JAN 1242  43       0.       .0   100.0 *  1 JAN 1422 143       1.       .1   100.1 *  1 JAN 1602 243       2.       .2   100.4
  1 JAN 1243  44       0.       .0   100.0 *  1 JAN 1423 144       1.       .1   100.1 *  1 JAN 1603 244       2.       .2   100.4
  1 JAN 1244  45       0.       .0   100.0 *  1 JAN 1424 145       1.       .1   100.1 *  1 JAN 1604 245       2.       .2   100.4
  1 JAN 1245  46       0.       .0   100.0 *  1 JAN 1425 146       1.       .1   100.1 *  1 JAN 1605 246       2.       .2   100.4
  1 JAN 1246  47       0.       .0   100.0 *  1 JAN 1426 147       1.       .1   100.1 *  1 JAN 1606 247       2.       .2   100.5
  1 JAN 1247  48       0.       .0   100.1 *  1 JAN 1427 148       1.       .1   100.1 *  1 JAN 1607 248       2.       .2   100.5
  1 JAN 1248  49       0.       .0   100.1 *  1 JAN 1428 149       1.       .1   100.1 *  1 JAN 1608 249       3.       .2   100.6
  1 JAN 1249  50       0.       .0   100.1 *  1 JAN 1429 150       1.       .1   100.1 *  1 JAN 1609 250       3.       .2   100.6
  1 JAN 1250  51       0.       .0   100.1 *  1 JAN 1430 151       1.       .1   100.1 *  1 JAN 1610 251       3.       .3   100.6
  1 JAN 1251  52       0.       .0   100.1 *  1 JAN 1431 152       1.       .1   100.1 *  1 JAN 1611 252       3.       .3   100.6
  1 JAN 1252  53       0.       .0   100.1 *  1 JAN 1432 153       1.       .1   100.1 *  1 JAN 1612 253       3.       .3   100.7
  1 JAN 1253  54       0.       .0   100.1 *  1 JAN 1433 154       1.       .1   100.1 *  1 JAN 1613 254       3.       .3   100.7
  1 JAN 1254  55       0.       .0   100.1 *  1 JAN 1434 155       1.       .1   100.1 *  1 JAN 1614 255       3.       .3   100.7
  1 JAN 1255  56       0.       .0   100.1 *  1 JAN 1435 156       1.       .1   100.1 *  1 JAN 1615 256       3.       .3   100.7
  1 JAN 1256  57       0.       .0   100.1 *  1 JAN 1436 157       1.       .1   100.1 *  1 JAN 1616 257       3.       .3   100.7
  1 JAN 1257  58       0.       .0   100.1 *  1 JAN 1437 158       1.       .1   100.1 *  1 JAN 1617 258       3.       .3   100.7
  1 JAN 1258  59       0.       .0   100.1 *  1 JAN 1438 159       1.       .1   100.1 *  1 JAN 1618 259       3.       .3   100.7
  1 JAN 1259  60       0.       .0   100.1 *  1 JAN 1439 160       1.       .1   100.1 *  1 JAN 1619 260       3.       .3   100.7
  1 JAN 1300  61       0.       .0   100.1 *  1 JAN 1440 161       1.       .1   100.1 *  1 JAN 1620 261       3.       .3   100.7
  1 JAN 1301  62       0.       .0   100.1 *  1 JAN 1441 162       1.       .1   100.1 *  1 JAN 1621 262       3.       .3   100.7
  1 JAN 1302  63       0.       .0   100.1 *  1 JAN 1442 163       1.       .1   100.1 *  1 JAN 1622 263       3.       .3   100.7
  1 JAN 1303  64       0.       .0   100.1 *  1 JAN 1443 164       1.       .1   100.1 *  1 JAN 1623 264       3.       .3   100.7
  1 JAN 1304  65       0.       .0   100.1 *  1 JAN 1444 165       1.       .1   100.2 *  1 JAN 1624 265       3.       .3   100.7
  1 JAN 1305  66       0.       .0   100.1 *  1 JAN 1445 166       1.       .1   100.2 *  1 JAN 1625 266       3.       .3   100.7
  1 JAN 1306  67       0.       .0   100.1 *  1 JAN 1446 167       1.       .1   100.2 *  1 JAN 1626 267       3.       .3   100.7
  1 JAN 1307  68       0.       .0   100.1 *  1 JAN 1447 168       1.       .1   100.2 *  1 JAN 1627 268       3.       .3   100.7
  1 JAN 1308  69       0.       .0   100.1 *  1 JAN 1448 169       1.       .1   100.2 *  1 JAN 1628 269       3.       .3   100.7
  1 JAN 1309  70       0.       .0   100.1 *  1 JAN 1449 170       1.       .1   100.2 *  1 JAN 1629 270       3.       .3   100.7
```

```
      1 JAN 1310  71       0.       .0   100.1 *  1 JAN 1450 171       1.       .1   100.2 *  1 JAN 1630 271       3.       .3   100.7
      1 JAN 1311  72       0.       .0   100.1 *  1 JAN 1451 172       1.       .1   100.2 *  1 JAN 1631 272       3.       .3   100.7
      1 JAN 1312  73       0.       .0   100.1 *  1 JAN 1452 173       1.       .1   100.2 *  1 JAN 1632 273       3.       .3   100.7
      1 JAN 1313  74       0.       .0   100.1 *  1 JAN 1453 174       1.       .1   100.2 *  1 JAN 1633 274       3.       .3   100.7
      1 JAN 1314  75       0.       .0   100.1 *  1 JAN 1454 175       1.       .1   100.2 *  1 JAN 1634 275       3.       .3   100.7
      1 JAN 1315  76       0.       .0   100.1 *  1 JAN 1455 176       1.       .1   100.2 *  1 JAN 1635 276       3.       .3   100.6
      1 JAN 1316  77       0.       .0   100.1 *  1 JAN 1456 177       1.       .1   100.2 *  1 JAN 1636 277       3.       .3   100.6
      1 JAN 1317  78       0.       .0   100.1 *  1 JAN 1457 178       1.       .1   100.2 *  1 JAN 1637 278       3.       .3   100.6
      1 JAN 1318  79       0.       .0   100.1 *  1 JAN 1458 179       1.       .1   100.2 *  1 JAN 1638 279       3.       .3   100.6
      1 JAN 1319  80       0.       .0   100.1 *  1 JAN 1459 180       1.       .1   100.2 *  1 JAN 1639 280       3.       .3   100.6
      1 JAN 1320  81       0.       .0   100.1 *  1 JAN 1500 181       1.       .1   100.2 *  1 JAN 1640 281       3.       .3   100.6
      1 JAN 1321  82       0.       .0   100.1 *  1 JAN 1501 182       1.       .1   100.2 *  1 JAN 1641 282       3.       .3   100.6
      1 JAN 1322  83       0.       .0   100.1 *  1 JAN 1502 183       1.       .1   100.2 *  1 JAN 1642 283       3.       .3   100.6
      1 JAN 1323  84       0.       .0   100.1 *  1 JAN 1503 184       1.       .1   100.2 *  1 JAN 1643 284       3.       .3   100.6
      1 JAN 1324  85       0.       .0   100.1 *  1 JAN 1504 185       1.       .1   100.2 *  1 JAN 1644 285       3.       .3   100.6
      1 JAN 1325  86       0.       .0   100.1 *  1 JAN 1505 186       1.       .1   100.2 *  1 JAN 1645 286       3.       .3   100.6
      1 JAN 1326  87       0.       .0   100.1 *  1 JAN 1506 187       1.       .1   100.2 *  1 JAN 1646 287       3.       .2   100.6
      1 JAN 1327  88       0.       .0   100.1 *  1 JAN 1507 188       1.       .1   100.2 *  1 JAN 1647 288       3.       .2   100.6
      1 JAN 1328  89       0.       .0   100.1 *  1 JAN 1508 189       1.       .1   100.2 *  1 JAN 1648 289       3.       .2   100.6
      1 JAN 1329  90       0.       .0   100.1 *  1 JAN 1509 190       1.       .1   100.2 *  1 JAN 1649 290       3.       .2   100.6
      1 JAN 1330  91       0.       .0   100.1 *  1 JAN 1510 191       1.       .1   100.2 *  1 JAN 1650 291       3.       .2   100.6
      1 JAN 1331  92       0.       .0   100.1 *  1 JAN 1511 192       1.       .1   100.2 *  1 JAN 1651 292       3.       .2   100.6
      1 JAN 1332  93       0.       .0   100.1 *  1 JAN 1512 193       1.       .1   100.2 *  1 JAN 1652 293       3.       .2   100.6
      1 JAN 1333  94       0.       .0   100.1 *  1 JAN 1513 194       1.       .1   100.2 *  1 JAN 1653 294       3.       .2   100.5
      1 JAN 1334  95       0.       .0   100.1 *  1 JAN 1514 195       1.       .1   100.2 *  1 JAN 1654 295       3.       .2   100.5
      1 JAN 1335  96       0.       .0   100.1 *  1 JAN 1515 196       1.       .1   100.2 *  1 JAN 1655 296       2.       .2   100.5
      1 JAN 1336  97       0.       .0   100.1 *  1 JAN 1516 197       1.       .1   100.2 *  1 JAN 1656 297       2.       .2   100.5
      1 JAN 1337  98       0.       .0   100.1 *  1 JAN 1517 198       1.       .1   100.2 *  1 JAN 1657 298       2.       .2   100.5
      1 JAN 1338  99       0.       .0   100.1 *  1 JAN 1518 199       1.       .1   100.2 *  1 JAN 1658 299       2.       .2   100.5
      1 JAN 1339 100       0.       .0   100.1 *  1 JAN 1519 200       1.       .1   100.2 *  1 JAN 1659 300       2.       .2   100.5
                                             *                                            *
    *************************************************************************************************************************************

     PEAK FLOW     TIME                              MAXIMUM AVERAGE FLOW
                                            6-HR       24-HR       72-HR      4.98-HR
   +   (CFS)       (HR)
                              (CFS)
   +       3.      4.30                       1.          1.          1.           1.
                           (INCHES)        .916        .916        .916         .916
                            (AC-FT)          0.          0.          0.           0.

    PEAK STORAGE   TIME                             MAXIMUM AVERAGE STORAGE
                                            6-HR       24-HR       72-HR      4.98-HR
   +  (AC-FT)      (HR)
           0.      4.30                       0.          0.          0.           0.

     PEAK STAGE    TIME                              MAXIMUM AVERAGE STAGE
                                            6-HR       24-HR       72-HR      4.98-HR
   +   (FEET)      (HR)
       100.73      4.30                  100.22      100.22      100.22       100.22

                            CUMULATIVE AREA =     .01 SQ MI

   1                                                          STATION     DET1

                               (I) INFLOW,   (O) OUTFLOW
              0.        2.        4.        6.        8.       10.       12.       14.       16.        0.        0.        0.        0.
                                                                                    (S) STORAGE
              .0        .0        .0        .0        .0        .0        .0        .1        .2        .3        .4        .0        .0
    DAHRMN PER
     11200   1I---------.---------.---------.---------.---------.---------S---------.---------.---------.---------.---------.---------.
     11201   2I         .         .         .         .         .         S         .         .         .         .         .         .
     11202   3I         .         .         .         .         .         S         .         .         .         .         .         .
     11203   4OI        .         .         .         .         .         S         .         .         .         .         .         .
     11204   5OI        .         .         .         .         .         S         .         .         .         .         .         .
     11205   6OI        .         .         .         .         .         S         .         .         .         .         .         .
     11206   7OI        .         .         .         .         .         S         .         .         .         .         .         .
     11207   8OI        .         .         .         .         .         S         .         .         .         .         .         .
     11208   9O I       .         .         .         .         .         S         .         .         .         .         .         .
     11209  10O I       .         .         .         .         .         S         .         .         .         .         .         .
     11210  11O I . . . . . . . . . . . . . . . . . . . . . . . . . . . . S . . . . . . . . . . . . . . . . . . . . . . . . . . . . . .
     11211  12O I       .         .         .         .         .         S         .         .         .         .         .         .
     11212  13O I       .         .         .         .         .         S         .         .         .         .         .         .
     11213  14O I       .         .         .         .         .         S         .         .         .         .         .         .
     11214  15O I       .         .         .         .         .         S         .         .         .         .         .         .
     11215  16O I       .         .         .         .         .         .S        .         .         .         .         .         .
     11216  17O I       .         .         .         .         .         .S        .         .         .         .         .         .
     11217  18O I       .         .         .         .         .         .S        .         .         .         .         .         .
     11218  19O I       .         .         .         .         .         .S        .         .         .         .         .         .
     11219  20O I       .         .         .         .         .         .S        .         .         .         .         .         .
     11220  21O I . . . . . . . . . . . . . . . . . . . . . . . . . . . . .S. . . . . . . . . . . . . . . . . . . . . . . . . . . . . .
     11221  22O I       .         .         .         .         .         .S        .         .         .         .         .         .
     11222  23.OI       .         .         .         .         .         .S        .         .         .         .         .         .
     11223  24.OI       .         .         .         .         .         .S        .         .         .         .         .         .
```

```
11224  25.OI       .         .         .         .         .         .S        .         .         .         .         .         .
11225  26.OI       .         .         .         .         .         .S        .         .         .         .         .         .
11226  27.OI       .         .         .         .         .         .S        .         .         .         .         .         .
11227  28.OI       .         .         .         .         .         .S        .         .         .         .         .         .
11228  29.OI       .         .         .         .         .         .S        .         .         .         .         .         .
11229  30.OI       .         .         .         .         .         .S        .         .         .         .         .         .
11230  31.OI . . . . . . . . . . . . . . . . . . . . . . . . . . . . .S. . . . . . . . . . . . . . . . . . . . . . . . . . . . . .
11231  32.OI       .         .         .         .         .         .S        .         .         .         .         .         .
11232  33.OI       .         .         .         .         .         .S        .         .         .         .         .         .
11233  34.OI       .         .         .         .         .         . S       .         .         .         .         .         .
11234  35.OI       .         .         .         .         .         . S       .         .         .         .         .         .
11235  36.OI       .         .         .         .         .         . S       .         .         .         .         .         .
11236  37.OI       .         .         .         .         .         . S       .         .         .         .         .         .
11237  38.OI       .         .         .         .         .         . S       .         .         .         .         .         .
11238  39.OI       .         .         .         .         .         . S       .         .         .         .         .         .
11239  40.OI       .         .         .         .         .         . S       .         .         .         .         .         .
11240  41.O.I. . . . . . . . . . . . . . . . . . . . . . . . . . . . . S . . . . . . . . . . . . . . . . . . . . . . . . . . . . . .
11241  42.O I      .         .         .         .         .         . S       .         .         .         .         .         .
11242  43.O I      .         .         .         .         .         . S       .         .         .         .         .         .
11243  44.O I      .         .         .         .         .         . S       .         .         .         .         .         .
11244  45.O I      .         .         .         .         .         . S       .         .         .         .         .         .
11245  46.O I      .         .         .         .         .         . S       .         .         .         .         .         .
11246  47.O I      .         .         .         .         .         . S       .         .         .         .         .         .
11247  48.O I      .         .         .         .         .         . S       .         .         .         .         .         .
11248  49.O I      .         .         .         .         .         . S       .         .         .         .         .         .
11249  50.O I      .         .         .         .         .         . S       .         .         .         .         .         .
11250  51.O.I. . . . . . . . . . . . . . . . . . . . . . . . . . . . . S . . . . . . . . . . . . . . . . . . . . . . . . . . . . . .
11251  52.O I      .         .         .         .         .         . S       .         .         .         .         .         .
11252  53.O I      .         .         .         .         .         . S       .         .         .         .         .         .
11253  54.O I      .         .         .         .         .         . S       .         .         .         .         .         .
11254  55.O I      .         .         .         .         .         . S       .         .         .         .         .         .
11255  56.O I      .         .         .         .         .         . S       .         .         .         .         .         .
11256  57.O I      .         .         .         .         .         .  S      .         .         .         .         .         .
11257  58.O I      .         .         .         .         .         .  S      .         .         .         .         .         .
11258  59.O I      .         .         .         .         .         .  S      .         .         .         .         .         .
11259  60.O I      .         .         .         .         .         .  S      .         .         .         .         .         .
11300  61.O.I. . . . . . . . . . . . . . . . . . . . . . . . . . . . . .S. . . . . . . . . . . . . . . . . . . . . . . . . . . . .
11301  62.O I      .         .         .         .         .         .  S      .         .         .         .         .         .
11302  63. OI      .         .         .         .         .         .  S      .         .         .         .         .         .
11303  64. OI      .         .         .         .         .         .  S      .         .         .         .         .         .
11304  65. OI      .         .         .         .         .         .  S      .         .         .         .         .         .
11305  66. OI      .         .         .         .         .         .  S      .         .         .         .         .         .
11306  67. OI      .         .         .         .         .         .  S      .         .         .         .         .         .
11307  68. OI      .         .         .         .         .         .  S      .         .         .         .         .         .
11308  69. OI      .         .         .         .         .         .  S      .         .         .         .         .         .
11309  70. OI      .         .         .         .         .         .  S      .         .         .         .         .         .
11310  71. OI. . . . . . . . . . . . . . . . . . . . . . . . . . . . . .S. . . . . . . . . . . . . . . . . . . . . . . . . . . . .
11311  72. OI      .         .         .         .         .         .  S      .         .         .         .         .         .
11312  73. OI      .         .         .         .         .         .  S      .         .         .         .         .         .
11313  74. OI      .         .         .         .         .         .  S      .         .         .         .         .         .
11314  75. OI      .         .         .         .         .         .  S      .         .         .         .         .         .
11315  76. OI      .         .         .         .         .         .  S      .         .         .         .         .         .
11316  77. OI      .         .         .         .         .         .  S      .         .         .         .         .         .
11317  78. OI      .         .         .         .         .         .  S      .         .         .         .         .         .
11318  79. OI      .         .         .         .         .         .  S      .         .         .         .         .         .
11319  80. OI      .         .         .         .         .         .  S      .         .         .         .         .         .
11320  81. OI. . . . . . . . . . . . . . . . . . . . . . . . . . . . . .S. . . . . . . . . . . . . . . . . . . . . . . . . . . . .
11321  82. OI      .         .         .         .         .         .  S      .         .         .         .         .         .
11322  83. OI      .         .         .         .         .         .   S     .         .         .         .         .         .
11323  84. OI      .         .         .         .         .         .   S     .         .         .         .         .         .
11324  85. OI      .         .         .         .         .         .   S     .         .         .         .         .         .
11325  86. OI      .         .         .         .         .         .   S     .         .         .         .         .         .
11326  87. OI      .         .         .         .         .         .   S     .         .         .         .         .         .
11327  88. OI      .         .         .         .         .         .   S     .         .         .         .         .         .
11328  89. OI      .         .         .         .         .         .   S     .         .         .         .         .         .
11329  90. OI      .         .         .         .         .         .   S     .         .         .         .         .         .
11330  91. OI. . . . . . . . . . . . . . . . . . . . . . . . . . . . . . S . . . . . . . . . . . . . . . . . . . . . . . . . . . .
11331  92. OI      .         .         .         .         .         .   S     .         .         .         .         .         .
11332  93. OI      .         .         .         .         .         .   S     .         .         .         .         .         .
11333  94. OI      .         .         .         .         .         .   S     .         .         .         .         .         .
11334  95. OI      .         .         .         .         .         .   S     .         .         .         .         .         .
11335  96. OI      .         .         .         .         .         .   S     .         .         .         .         .         .
11336  97. OI      .         .         .         .         .         .   S     .         .         .         .         .         .
11337  98. OI      .         .         .         .         .         .   S     .         .         .         .         .         .
11338  99. OI      .         .         .         .         .         .   S     .         .         .         .         .         .
11339 100. OI      .         .         .         .         .         .   S     .         .         .         .         .         .
11340 101. OI. . . . . . . . . . . . . . . . . . . . . . . . . . . . . . S . . . . . . . . . . . . . . . . . . . . . . . . . . . .
11341 102. OI      .         .         .         .         .         .   S     .         .         .         .         .         .
11342 103. OI      .         .         .         .         .         .   S     .         .         .         .         .         .
11343 104. OI      .         .         .         .         .         .   S     .         .         .         .         .         .
11344 105. OI      .         .         .         .         .         .   S     .         .         .         .         .         .
11345 106. OI      .         .         .         .         .         .   S     .         .         .         .         .         .
11346 107. OI      .         .         .         .         .         .   S     .         .         .         .         .         .
11347 108. OI      .         .         .         .         .         .   S     .         .         .         .         .         .
```

```
11348 109. OI      .         .         .         .         .         .   S     .         .         .         .         .         .
11349 110. OI      .         .         .         .         .         .   S     .         .         .         .         .         .
11350 111. OI. . . . . . . . . . . . . . . . . . . . . . . . . . . . . . S . . . . . . . . . . . . . . . . . . . . . . . . . . . . .
11351 112. OI      .         .         .         .         .         .    S    .         .         .         .         .         .
11352 113. OI      .         .         .         .         .         .    S    .         .         .         .         .         .
11353 114. OI      .         .         .         .         .         .    S    .         .         .         .         .         .
11354 115. OI      .         .         .         .         .         .    S    .         .         .         .         .         .
11355 116.  I      .         .         .         .         .         .    S    .         .         .         .         .         .
11356 117.  I      .         .         .         .         .         .    S    .         .         .         .         .         .
11357 118.  I      .         .         .         .         .         .    S    .         .         .         .         .         .
11358 119.  OI     .         .         .         .         .         .    S    .         .         .         .         .         .
11359 120.  OI     .         .         .         .         .         .    S    .         .         .         .         .         .
11400 121. .OI . . . . . . . . . . . . . . . . . . . . . . . . . . . . .S. . . . . . . . . . . . . . . . . . . . . . . . . . . . .
11401 122.  OI     .         .         .         .         .         .    S    .         .         .         .         .         .
11402 123.  OI     .         .         .         .         .         .    S    .         .         .         .         .         .
11403 124.  OI     .         .         .         .         .         .    S    .         .         .         .         .         .
11404 125.  OI     .         .         .         .         .         .    S    .         .         .         .         .         .
11405 126.  OI     .         .         .         .         .         .    S    .         .         .         .         .         .
11406 127.  OI     .         .         .         .         .         .    S    .         .         .         .         .         .
11407 128.  OI     .         .         .         .         .         .    S    .         .         .         .         .         .
11408 129.  OI     .         .         .         .         .         .    S    .         .         .         .         .         .
11409 130.  OI     .         .         .         .         .         .    S    .         .         .         .         .         .
11410 131. .OI . . . . . . . . . . . . . . . . . . . . . . . . . . . . .S. . . . . . . . . . . . . . . . . . . . . . . . . . . . .
11411 132.  OI     .         .         .         .         .         .    S    .         .         .         .         .         .
11412 133.  OI     .         .         .         .         .         .    S    .         .         .         .         .         .
11413 134.  OI     .         .         .         .         .         .    S    .         .         .         .         .         .
11414 135.  OI     .         .         .         .         .         .    S    .         .         .         .         .         .
11415 136.  OI     .         .         .         .         .         .    S    .         .         .         .         .         .
11416 137.  OI     .         .         .         .         .         .    S    .         .         .         .         .         .
11417 138.  OI     .         .         .         .         .         .    S    .         .         .         .         .         .
11418 139.  OI     .         .         .         .         .         .    S    .         .         .         .         .         .
11419 140.  OI     .         .         .         .         .         .    S    .         .         .         .         .         .
11420 141. .OI . . . . . . . . . . . . . . . . . . . . . . . . . . . . .S. . . . . . . . . . . . . . . . . . . . . . . . . . . . .
11421 142.  OI     .         .         .         .         .         .    S    .         .         .         .         .         .
11422 143.  OI     .         .         .         .         .         .     S   .         .         .         .         .         .
11423 144.  OI     .         .         .         .         .         .     S   .         .         .         .         .         .
11424 145.  OI     .         .         .         .         .         .     S   .         .         .         .         .         .
11425 146.  OI     .         .         .         .         .         .     S   .         .         .         .         .         .
11426 147.  OI     .         .         .         .         .         .     S   .         .         .         .         .         .
11427 148.  OI     .         .         .         .         .         .     S   .         .         .         .         .         .
11428 149.  OI     .         .         .         .         .         .     S   .         .         .         .         .         .
11429 150.  OI     .         .         .         .         .         .     S   .         .         .         .         .         .
11430 151. .OI . . . . . . . . . . . . . . . . . . . . . . . . . . . . . S . . . . . . . . . . . . . . . . . . . . . . . . . . . .
11431 152.  OI     .         .         .         .         .         .     S   .         .         .         .         .         .
11432 153.  OI     .         .         .         .         .         .     S   .         .         .         .         .         .
11433 154.  OI     .         .         .         .         .         .     S   .         .         .         .         .         .
11434 155.  OI     .         .         .         .         .         .     S   .         .         .         .         .         .
11435 156.  OI     .         .         .         .         .         .     S   .         .         .         .         .         .
11436 157.  OI     .         .         .         .         .         .     S   .         .         .         .         .         .
11437 158.  O I    .         .         .         .         .         .     S   .         .         .         .         .         .
11438 159.  O I    .         .         .         .         .         .     S   .         .         .         .         .         .
11439 160.  O I    .         .         .         .         .         .     S   .         .         .         .         .         .
11440 161. .O.I. . . . . . . . . . . . . . . . . . . . . . . . . . . . . S . . . . . . . . . . . . . . . . . . . . . . . . . . . .
11441 162.  O I    .         .         .         .         .         .     S   .         .         .         .         .         .
11442 163.  O I    .         .         .         .         .         .     S   .         .         .         .         .         .
11443 164.  O I    .         .         .         .         .         .     S   .         .         .         .         .         .
11444 165.  O I    .         .         .         .         .         .     S   .         .         .         .         .         .
11445 166.  O I    .         .         .         .         .         .     S   .         .         .         .         .         .
11446 167.   OI    .         .         .         .         .         .     S   .         .         .         .         .         .
11447 168.   OI    .         .         .         .         .         .      S  .         .         .         .         .         .
11448 169.   OI    .         .         .         .         .         .      S  .         .         .         .         .         .
11449 170.   O I   .         .         .         .         .         .      S  .         .         .         .         .         .
11450 171. . O I . . . . . . . . . . . . . . . . . . . . . . . . . . . . .S. . . . . . . . . . . . . . . . . . . . . . . . . . .
11451 172.   O I   .         .         .         .         .         .      S  .         .         .         .         .         .
11452 173.   O I   .         .         .         .         .         .      S  .         .         .         .         .         .
11453 174.   O I   .         .         .         .         .         .      S  .         .         .         .         .         .
11454 175.   O I   .         .         .         .         .         .      S  .         .         .         .         .         .
11455 176.   O I   .         .         .         .         .         .      S  .         .         .         .         .         .
11456 177.   O I   .         .         .         .         .         .      S  .         .         .         .         .         .
11457 178.   O I   .         .         .         .         .         .      S  .         .         .         .         .         .
11458 179.   O I   .         .         .         .         .         .      S  .         .         .         .         .         .
11459 180.   O I   .         .         .         .         .         .      S  .         .         .         .         .         .
11500 181. . O I . . . . . . . . . . . . . . . . . . . . . . . . . . . . .S. . . . . . . . . . . . . . . . . . . . . . . . . . .
11501 182.   O I   .         .         .         .         .         .      S  .         .         .         .         .         .
11502 183.   O I   .         .         .         .         .         .      S  .         .         .         .         .         .
11503 184.   O I   .         .         .         .         .         .      S  .         .         .         .         .         .
11504 185.   O I   .         .         .         .         .         .      S  .         .         .         .         .         .
11505 186.   O I   .         .         .         .         .         .      S  .         .         .         .         .         .
11506 187.   O I   .         .         .         .         .         .      S  .         .         .         .         .         .
11507 188.   O I   .         .         .         .         .         .      S  .         .         .         .         .         .
11508 189.   O I   .         .         .         .         .         .       S .         .         .         .         .         .
11509 190.   O I   .         .         .         .         .         .       S .         .         .         .         .         .
11510 191. . O I . . . . . . . . . . . . . . . . . . . . . . . . . . . . . S . . . . . . . . . . . . . . . . . . . . . . . . . .
11511 192.   O  I  .         .         .         .         .         .       S .         .         .         .         .         .
```

```
11512 193.   O  I  .         .         .         .         .         .       S .         .         .         .         .         .
11513 194.   O  I  .         .         .         .         .         .       S .         .         .         .         .         .
11514 195.   O  I  .         .         .         .         .         .       S .         .         .         .         .         .
11515 196.   O  I  .         .         .         .         .         .       S .         .         .         .         .         .
11516 197.   O  I  .         .         .         .         .         .       S .         .         .         .         .         .
11517 198.   O  I  .         .         .         .         .         .       S .         .         .         .         .         .
11518 199.   O  I  .         .         .         .         .         .       S .         .         .         .         .         .
11519 200.    O I  .         .         .         .         .         .       S .         .         .         .         .         .
11520 201. . .O.I. . . . . . . . . . . . . . . . . . . . . . . . . . . . . S . . . . . . . . . . . . . . . . . . . . . . . . . .
11521 202.    O I  .         .         .         .         .         .       S .         .         .         .         .         .
11522 203.    O  I .         .         .         .         .         .        S.         .         .         .         .         .
11523 204.    O  I .         .         .         .         .         .        S.         .         .         .         .         .
11524 205.    O  I .         .         .         .         .         .        S.         .         .         .         .         .
11525 206.    O  I .         .         .         .         .         .        S.         .         .         .         .         .
11526 207.    O  I .         .         .         .         .         .        S.         .         .         .         .         .
11527 208.    O  I .         .         .         .         .         .        S.         .         .         .         .         .
11528 209.    O  I .         .         .         .         .         .        S.         .         .         .         .         .
11529 210.    O  I .         .         .         .         .         .        S.         .         .         .         .         .
11530 211. . .O. .I. . . . . . . . . . . . . . . . . . . . . . . . . . . . .S. . . . . . . . . . . . . . . . . . . . . . . . .
11531 212.    O   I.         .         .         .         .         .        S.         .         .         .         .         .
11532 213.    O   I.         .         .         .         .         .        S.         .         .         .         .         .
11533 214.    O   I.         .         .         .         .         .         S         .         .         .         .         .
11534 215.    O    I         .         .         .         .         .         S         .         .         .         .         .
11535 216.    O    I         .         .         .         .         .         S         .         .         .         .         .
11536 217.    O    I         .         .         .         .         .         S         .         .         .         .         .
11537 218.    O    I         .         .         .         .         .         S         .         .         .         .         .
11538 219.     O   .I        .         .         .         .         .         S         .         .         .         .         .
11539 220.     O   .I        .         .         .         .         .         S         .         .         .         .         .
11540 221. . . O . .I. . . . . . . . . . . . . . . . . . . . . . . . . . . . S . . . . . . . . . . . . . . . . . . . . . . . . .
11541 222.     O   .I        .         .         .         .         .         .S        .         .         .         .         .
11542 223.     O   .I        .         .         .         .         .         .S        .         .         .         .         .
11543 224.     O   I         .         .         .         .         .         .S        .         .         .         .         .
11544 225.     O   I         .         .         .         .         .         .S        .         .         .         .         .
11545 226.     O  I.         .         .         .         .         .         .S        .         .         .         .         .
11546 227.     O  I.         .         .         .         .         .         .S        .         .         .         .         .
11547 228.     O I .         .         .         .         .         .         .S        .         .         .         .         .
11548 229.     O I .         .         .         .         .         .         .S        .         .         .         .         .
11549 230.     OI  .         .         .         .         .         .         .S        .         .         .         .         .
11550 231. . . OI. . . . . . . . . . . . . . . . . . . . . . . . . . . . . . .S. . . . . . . . . . . . . . . . . . . . . . . .
11551 232.     I   .         .         .         .         .         .         .S        .         .         .         .         .
11552 233.     I   .         .         .         .         .         .         .S        .         .         .         .         .
11553 234.    IO   .         .         .         .         .         .         .S        .         .         .         .         .
11554 235.   I O   .         .         .         .         .         .         .S        .         .         .         .         .
11555 236.     O   I         .         .         .         .         .         .S        .         .         .         .         .
11556 237.     O   .    I    .         .         .         .         .         . S       .         .         .         .         .
11557 238.     O   .         I         .         .         .         .         . S       .         .         .         .         .
11558 239.      O  .         .    I    .         .         .         .         . S       .         .         .         .         .
11559 240.      O  .         .         I         .         .         .         .  S      .         .         .         .         .
11600 241. . . .O. . . . . . . . . . . . . . .I. . . . . . . . . . . . . . . . . . S . . . . . . . . . . . . . . . . . . . . . . .
11601 242.       O .         .         .         I         .         .         .   S     .         .         .         .         .
11602 243.       O .         .         .         .    I    .         .         .    S    .         .         .         .         .
11603 244.        O.         .         .         .         .I        .         .     S   .         .         .         .         .
11604 245.         O         .         .         .         .    I    .         .       S .         .         .         .         .
11605 246.         O         .         .         .         .         .I        .        S.         .         .         .         .
11606 247.         .O        .         .         .         .         .    I    .         S         .         .         .         .
11607 248.         . O       .         .         .         .         .         .I        . S       .         .         .         .
11608 249.         .  O      .         .         .         .         .    I    .         .   S     .         .         .         .
11609 250.         .   O     .         .         .         .         . I       .         .    S    .         .         .         .
11610 251. . . . . . . O . . . . . . . . . . . . . . . . . . . . . .I. . . . . . . . . . . . . . S . . . . . . . . . . . . . . . . .
11611 252.         .    O    .         .         .         . I       .         .         .      S  .         .         .         .
11612 253.         .    O    .         .         .    I    .         .         .         .       S .         .         .         .
11613 254.         .     O   .         .         .  I      .         .         .         .        S.         .         .         .
11614 255.         .     O   .         .       I .         .         .         .         .         S         .         .         .
11615 256.         .     O   .         .  I      .         .         .         .         .         S         .         .         .
11616 257.         .      O  .       I .         .         .         .         .         .         .S        .         .         .
11617 258.         .      O  .   I     .         .         .         .         .         .         .S        .         .         .
11618 259.         .      O I.         .         .         .         .         .         .         .S        .         .         .
11619 260.         .   I  O  .         .         .         .         .         .         .         .S        .         .         .
11620 261. . . . .I. . . .O. . . . . . . . . . . . . . . . . . . . . . . . . . . . . . . . . . . . .S. . . . . . . . . . . . . .
11621 262.        I.      O  .         .         .         .         .         .         .         .S        .         .         .
11622 263.        I.      O  .         .         .         .         .         .         .         S         .         .         .
11623 264.        I.     O   .         .         .         .         .         .         .         S         .         .         .
11624 265.        I.     O   .         .         .         .         .         .         .         S         .         .         .
11625 266.       I .     O   .         .         .         .         .         .         .         S         .         .         .
11626 267.       I .     O   .         .         .         .         .         .         .         S         .         .         .
11627 268.       I .     O   .         .         .         .         .         .         .        S.         .         .         .
11628 269.       I .     O   .         .         .         .         .         .         .        S.         .         .         .
11629 270.      I  .     O   .         .         .         .         .         .         .        S.         .         .         .
11630 271. . . .I. . . . O . . . . . . . . . . . . . . . . . . . . . . . . . . . . . . . . . . .S. . . . . . . . . . . . . . .
11631 272.      I  .    O    .         .         .         .         .         .         .       S .         .         .         .
11632 273.      I  .    O    .         .         .         .         .         .         .       S .         .         .         .
11633 274.     I   .    O    .         .         .         .         .         .         .       S .         .         .         .
11634 275.     I   .    O    .         .         .         .         .         .         .       S .         .         .         .
11635 276.     I   .    O    .         .         .         .         .         .         .       S .         .         .         .
```

```
  11636 277.     I   .    O    .         .         .         .         .         .         .      S  .         .         .         .
  11637 278.     I   .    O    .         .         .         .         .         .         .      S  .         .         .         .
  11638 279.     I   .    O    .         .         .         .         .         .         .      S  .         .         .         .
  11639 280.     I   .   O     .         .         .         .         .         .         .      S  .         .         .         .
  11640 281. . . I . . . O . . . . . . . . . . . . . . . . . . . . . . . . . . . . . . . . . S . . . . . . . . . . . . . . . . .
  11641 282.     I   .   O     .         .         .         .         .         .         .     S   .         .         .         .
  11642 283.    I    .   O     .         .         .         .         .         .         .     S   .         .         .         .
  11643 284.    I    .   O     .         .         .         .         .         .         .     S   .         .         .         .
  11644 285.    I    .   O     .         .         .         .         .         .         .    S    .         .         .         .
  11645 286.    I    .   O     .         .         .         .         .         .         .    S    .         .         .         .
  11646 287.    I    .   O     .         .         .         .         .         .         .    S    .         .         .         .
  11647 288.    I    .  O      .         .         .         .         .         .         .    S    .         .         .         .
  11648 289.    I    .  O      .         .         .         .         .         .         .   S     .         .         .         .
  11649 290.    I    .  O      .         .         .         .         .         .         .   S     .         .         .         .
  11650 291. . .I. . . .O. . . . . . . . . . . . . . . . . . . . . . . . . . . . . . . . . S . . . . . . . . . . . . . . . . . .
  11651 292.    I    .  O      .         .         .         .         .         .         .   S     .         .         .         .
  11652 293.    I    .  O      .         .         .         .         .         .         .   S     .         .         .         .
  11653 294.   I     .  O      .         .         .         .         .         .         .  S      .         .         .         .
  11654 295.   I     .  O      .         .         .         .         .         .         .  S      .         .         .         .
  11655 296.   I     . O       .         .         .         .         .         .         .  S      .         .         .         .
  11656 297.   I     . O       .         .         .         .         .         .         .  S      .         .         .         .
  11657 298.   I     . O       .         .         .         .         .         .         . S       .         .         .         .
  11658 299.   I     . O       .         .         .         .         .         .         . S       .         .         .         .
  11659 300.---I-----.-O-------.---------.---------.---------.---------.---------.---------.-S-------.---------.---------.---------.
1
1
                                                           RUNOFF SUMMARY
                                                   FLOW IN CUBIC FEET PER SECOND
                                                TIME IN HOURS,  AREA IN SQUARE MILES

                                       PEAK   TIME OF     AVERAGE FLOW FOR MAXIMUM PERIOD      BASIN     MAXIMUM     TIME OF
          OPERATION       STATION      FLOW     PEAK                                            AREA      STAGE     MAX STAGE
+                                                          6-HOUR     24-HOUR     72-HOUR

          HYDROGRAPH AT
+                        SWVHD100        14.    4.12           2.          2.          2.        .01

          ROUTED TO
+                            DET1         3.    4.30           1.          1.          1.        .01
+                                                                                                         100.73        4.30



 *** NORMAL END OF HEC-1 ***
```

```
1*****************************************                                                   ***************************************
 *                                       *                                                   *                                     *
 *   FLOOD HYDROGRAPH PACKAGE  (HEC-1)   *                                                   *    U.S. ARMY CORPS OF ENGINEERS     *
 *               JUN   1998              *                                                   *    HYDROLOGIC ENGINEERING CENTER    *
 *            VERSION 4.1                *                                                   *          609 SECOND STREET          *
 *                                       *                                                   *       DAVIS, CALIFORNIA 95616       *
 *  RUN DATE   06JUL20  TIME  16:42:56   *                                                   *           (916) 756-1104            *
 *                                       *                                                   *                                     *
 *****************************************                                                   ***************************************
```

Detention Routing
Calculation for Basin 200

```
                                                 X     X  XXXXXXX   XXXXX          X
                                                 X     X  X        X     X        XX
                                                 X     X  X        X               X
                                                 XXXXXXX  XXXX     X       XXXXX   X
                                                 X     X  X        X               X
                                                 X     X  X        X     X         X
                                                 X     X  XXXXXXX   XXXXX         XXX




            THIS PROGRAM REPLACES ALL PREVIOUS VERSIONS OF HEC-1 KNOWN AS HEC1 (JAN 73), HEC1GS, HEC1DB, AND HEC1KW.

            THE DEFINITIONS OF VARIABLES -RTIMP- AND -RTIOR- HAVE CHANGED FROM THOSE USED WITH THE 1973-STYLE INPUT STRUCTURE.
            THE DEFINITION OF -AMSKK- ON RM-CARD WAS CHANGED WITH REVISIONS DATED 28 SEP 81. THIS IS THE FORTRAN77 VERSION
            NEW OPTIONS: DAMBREAK OUTFLOW SUBMERGENCE , SINGLE EVENT DAMAGE CALCULATION, DSS:WRITE STAGE FREQUENCY,
            DSS:READ TIME SERIES AT DESIRED CALCULATION INTERVAL   LOSS RATE:GREEN AND AMPT INFILTRATION
            KINEMATIC WAVE: NEW FINITE DIFFERENCE ALGORITHM


1                                                       HEC-1 INPUT                                                     PAGE  1

           LINE           ID.......1.......2.......3.......4.......5.......6.......7.......8.......9......10

 *** FREE ***
                          *DIAGRAM
              1           ID   SOUTH OTAY VTM; J-15013-C
              2           ID   PRELIMINARY DETENTION ANALYSIS FOR BASIN 2
              3           ID   FEBRUARY 28, 2019 - FILE NAME: SWV2HD00.hc1
              4           IT       1 01JAN90    1200     300
              5           IO       5       0
                          *

              6           KKSWVHD200.hc1
              7           KM   RUN DATE   7/6/2020
              8           KM   RATIONAL METHOD HYDROGRAPH PROGRAM
              9           KM   COPYRIGHT 1992, 2014, RICK ENGINEERING COMPANY
             10           KM   6HR RAINFALL IS 2 INCHES
             11           KM   RATIONAL METHOD RUNOFF COEFFICIENT IS 0.8
             12           KM   RATIONAL METHOD TIME OF CONCENTRATION IS 12 MIN.
             13           KM   FOR THIS DATA TO RUN PROPERLY THIS IT CARD MUST BE ADDED TO YOUR HEC-1
             14           KM   IT 2 01JAN90 1200 200
             15           BA  0.0373
             16           IN      12 01JAN90    1154
             17           QI       0     2.3     2.3     2.5     2.5     2.7     2.7     2.9       3     3.2
             18           QI     3.3     3.6     3.8     4.2     4.5     5.1     5.5     6.8     7.7    11.3
             19           QI     8.5    64.8     9.1     6.1     4.8       4     3.5     3.1     2.8     2.6
             20           QI     2.4       0       0       0       0       0       0       0       0       0
             21           QI       0       0
                          *

             22           KK    DET1
             23           KO       2       2       0       0      21
             24           KM   BMP 1
             25           RS       1    STOR      -1
             26           SV       0   1.335   1.336   1.377
             27           SQ       0    16.3    28.0    31.5
             28           SE     100     101     102     103
                          *
             29           ZZ
1
                 SCHEMATIC DIAGRAM OF STREAM NETWORK
 INPUT
  LINE      (V) ROUTING         (--->) DIVERSION OR PUMP FLOW

   NO.      (.) CONNECTOR       (<---) RETURN OF DIVERTED OR PUMPED FLOW

     6    SWVHD200
                 V
                 V
```

```
   22        DET1

 (***) RUNOFF ALSO COMPUTED AT THIS LOCATION
1*****************************************                                                   ***************************************
 *                                       *                                                   *                                     *
 *   FLOOD HYDROGRAPH PACKAGE  (HEC-1)   *                                                   *    U.S. ARMY CORPS OF ENGINEERS     *
 *              JUN   1998               *                                                   *    HYDROLOGIC ENGINEERING CENTER    *
 *           VERSION 4.1                 *                                                   *          609 SECOND STREET          *
 *                                       *                                                   *       DAVIS, CALIFORNIA 95616       *
 *  RUN DATE   06JUL20  TIME  16:42:56   *                                                   *           (916) 756-1104            *
 *                                       *                                                   *                                     *
 *****************************************                                                   ***************************************




                          SOUTH OTAY VTM; J-15013-C
                          PRELIMINARY DETENTION ANALYSIS FOR BASIN 2
                          FEBRUARY 28, 2019 - FILE NAME: SWV2HD00.hc1

    5 IO          OUTPUT CONTROL VARIABLES
                        IPRNT           5  PRINT CONTROL
                        IPLOT           0  PLOT CONTROL
                        QSCAL          0.  HYDROGRAPH PLOT SCALE

      IT          HYDROGRAPH TIME DATA
                         NMIN           1  MINUTES IN COMPUTATION INTERVAL
                        IDATE      1JAN90  STARTING DATE
                        ITIME        1200  STARTING TIME
                           NQ         300  NUMBER OF HYDROGRAPH ORDINATES
                       NDDATE      1JAN90  ENDING DATE
                       NDTIME        1659  ENDING TIME
                        ICENT          19  CENTURY MARK

                    COMPUTATION INTERVAL     .02 HOURS
                         TOTAL TIME BASE    4.98 HOURS

           ENGLISH UNITS
                DRAINAGE AREA         SQUARE MILES
                PRECIPITATION DEPTH   INCHES
                LENGTH, ELEVATION     FEET
                FLOW                  CUBIC FEET PER SECOND
                STORAGE VOLUME        ACRE-FEET
                SURFACE AREA          ACRES
                TEMPERATURE           DEGREES FAHRENHEIT



 *** *** *** *** *** *** *** *** *** *** *** *** *** *** *** *** *** *** *** *** *** *** *** *** *** *** *** *** *** *** *** *** ***


             **************
             *            *
   22 KK     *      DET1  *
             *            *
             **************


   23 KO          OUTPUT CONTROL VARIABLES
                        IPRNT           2  PRINT CONTROL
                        IPLOT           2  PLOT CONTROL
                        QSCAL          0.  HYDROGRAPH PLOT SCALE
                        IPNCH           0  PUNCH COMPUTED HYDROGRAPH
                         IOUT          21  SAVE HYDROGRAPH ON THIS UNIT
                        ISAV1           1  FIRST ORDINATE PUNCHED OR SAVED
                        ISAV2         300  LAST ORDINATE PUNCHED OR SAVED
                       TIMINT        .017  TIME INTERVAL IN HOURS

                             BMP 1

                HYDROGRAPH ROUTING DATA

   25 RS          STORAGE ROUTING
                        NSTPS           1  NUMBER OF SUBREACHES
                         ITYP        STOR  TYPE OF INITIAL CONDITION
                       RSVRIC       -1.00  INITIAL CONDITION
                            X         .00 WORKING R AND D COEFFICIENT

   26 SV            STORAGE          .0       1.3       1.3       1.4

   27 SQ          DISCHARGE          0.       16.       28.       32.

   28 SE          ELEVATION      100.00    101.00    102.00    103.00
```

```
                                                                   ***

 *** WARNING *** MODIFIED PULS ROUTING MAY BE NUMERICALLY UNSTABLE FOR OUTFLOWS BETWEEN       16. TO       28.
                 THE ROUTED HYDROGRAPH SHOULD BE EXAMINED FOR OSCILLATIONS OR OUTFLOWS GREATER THAN PEAK INFLOWS.
                 THIS CAN BE CORRECTED BY DECREASING THE TIME INTERVAL OR INCREASING STORAGE (USE A LONGER REACH.)

 *******************************************************************************************************************

                                                  HYDROGRAPH AT STATION     DET1

 *******************************************************************************************************************
                                          *                                           *
  DA MON HRMN ORD  OUTFLOW  STORAGE    STAGE * DA MON HRMN ORD  OUTFLOW  STORAGE    STAGE * DA MON HRMN ORD  OUTFLOW  STORAGE    STAGE
                                          *                                           *
   1 JAN 1200   1       1.        .1   100.1 *  1 JAN 1340 101       2.        .2   100.2 *  1 JAN 1520 201       4.        .4   100.3
   1 JAN 1201   2       1.        .1   100.1 *  1 JAN 1341 102       2.        .2   100.2 *  1 JAN 1521 202       4.        .4   100.3
   1 JAN 1202   3       1.        .1   100.1 *  1 JAN 1342 103       2.        .2   100.2 *  1 JAN 1522 203       5.        .4   100.3
   1 JAN 1203   4       1.        .1   100.1 *  1 JAN 1343 104       2.        .2   100.2 *  1 JAN 1523 204       5.        .4   100.3
   1 JAN 1204   5       1.        .1   100.1 *  1 JAN 1344 105       2.        .2   100.2 *  1 JAN 1524 205       5.        .4   100.3
   1 JAN 1205   6       1.        .1   100.1 *  1 JAN 1345 106       3.        .2   100.2 *  1 JAN 1525 206       5.        .4   100.3
   1 JAN 1206   7       1.        .1   100.1 *  1 JAN 1346 107       3.        .2   100.2 *  1 JAN 1526 207       5.        .4   100.3
   1 JAN 1207   8       1.        .1   100.1 *  1 JAN 1347 108       3.        .2   100.2 *  1 JAN 1527 208       5.        .4   100.3
   1 JAN 1208   9       1.        .1   100.1 *  1 JAN 1348 109       3.        .2   100.2 *  1 JAN 1528 209       5.        .4   100.3
   1 JAN 1209  10       1.        .1   100.1 *  1 JAN 1349 110       3.        .2   100.2 *  1 JAN 1529 210       5.        .4   100.3
   1 JAN 1210  11       1.        .1   100.1 *  1 JAN 1350 111       3.        .2   100.2 *  1 JAN 1530 211       5.        .4   100.3
   1 JAN 1211  12       1.        .1   100.1 *  1 JAN 1351 112       3.        .2   100.2 *  1 JAN 1531 212       5.        .4   100.3
   1 JAN 1212  13       1.        .1   100.1 *  1 JAN 1352 113       3.        .2   100.2 *  1 JAN 1532 213       5.        .4   100.3
   1 JAN 1213  14       1.        .1   100.1 *  1 JAN 1353 114       3.        .2   100.2 *  1 JAN 1533 214       5.        .4   100.3
   1 JAN 1214  15       1.        .1   100.1 *  1 JAN 1354 115       3.        .2   100.2 *  1 JAN 1534 215       5.        .4   100.3
   1 JAN 1215  16       1.        .1   100.1 *  1 JAN 1355 116       3.        .2   100.2 *  1 JAN 1535 216       5.        .4   100.3
   1 JAN 1216  17       1.        .1   100.1 *  1 JAN 1356 117       3.        .2   100.2 *  1 JAN 1536 217       5.        .4   100.3
   1 JAN 1217  18       1.        .1   100.1 *  1 JAN 1357 118       3.        .2   100.2 *  1 JAN 1537 218       5.        .4   100.3
   1 JAN 1218  19       1.        .1   100.1 *  1 JAN 1358 119       3.        .2   100.2 *  1 JAN 1538 219       5.        .4   100.3
   1 JAN 1219  20       1.        .1   100.1 *  1 JAN 1359 120       3.        .2   100.2 *  1 JAN 1539 220       5.        .4   100.3
   1 JAN 1220  21       1.        .1   100.1 *  1 JAN 1400 121       3.        .2   100.2 *  1 JAN 1540 221       6.        .5   100.3
   1 JAN 1221  22       1.        .1   100.1 *  1 JAN 1401 122       3.        .2   100.2 *  1 JAN 1541 222       6.        .5   100.3
   1 JAN 1222  23       1.        .1   100.1 *  1 JAN 1402 123       3.        .2   100.2 *  1 JAN 1542 223       6.        .5   100.4
   1 JAN 1223  24       1.        .1   100.1 *  1 JAN 1403 124       3.        .2   100.2 *  1 JAN 1543 224       6.        .5   100.4
   1 JAN 1224  25       1.        .1   100.1 *  1 JAN 1404 125       3.        .2   100.2 *  1 JAN 1544 225       6.        .5   100.4
   1 JAN 1225  26       2.        .1   100.1 *  1 JAN 1405 126       3.        .2   100.2 *  1 JAN 1545 226       6.        .5   100.4
   1 JAN 1226  27       2.        .1   100.1 *  1 JAN 1406 127       3.        .2   100.2 *  1 JAN 1546 227       6.        .5   100.4
   1 JAN 1227  28       2.        .1   100.1 *  1 JAN 1407 128       3.        .2   100.2 *  1 JAN 1547 228       6.        .5   100.4
   1 JAN 1228  29       2.        .1   100.1 *  1 JAN 1408 129       3.        .2   100.2 *  1 JAN 1548 229       6.        .5   100.4
   1 JAN 1229  30       2.        .1   100.1 *  1 JAN 1409 130       3.        .2   100.2 *  1 JAN 1549 230       6.        .5   100.4
   1 JAN 1230  31       2.        .1   100.1 *  1 JAN 1410 131       3.        .2   100.2 *  1 JAN 1550 231       6.        .5   100.4
   1 JAN 1231  32       2.        .1   100.1 *  1 JAN 1411 132       3.        .2   100.2 *  1 JAN 1551 232       6.        .5   100.4
   1 JAN 1232  33       2.        .1   100.1 *  1 JAN 1412 133       3.        .2   100.2 *  1 JAN 1552 233       6.        .5   100.4
   1 JAN 1233  34       2.        .1   100.1 *  1 JAN 1413 134       3.        .2   100.2 *  1 JAN 1553 234       6.        .5   100.4
   1 JAN 1234  35       2.        .1   100.1 *  1 JAN 1414 135       3.        .2   100.2 *  1 JAN 1554 235       6.        .5   100.4
   1 JAN 1235  36       2.        .1   100.1 *  1 JAN 1415 136       3.        .2   100.2 *  1 JAN 1555 236       7.        .5   100.4
   1 JAN 1236  37       2.        .1   100.1 *  1 JAN 1416 137       3.        .2   100.2 *  1 JAN 1556 237       7.        .5   100.4
   1 JAN 1237  38       2.        .1   100.1 *  1 JAN 1417 138       3.        .2   100.2 *  1 JAN 1557 238       7.        .6   100.4
   1 JAN 1238  39       2.        .1   100.1 *  1 JAN 1418 139       3.        .2   100.2 *  1 JAN 1558 239       7.        .6   100.4
   1 JAN 1239  40       2.        .1   100.1 *  1 JAN 1419 140       3.        .2   100.2 *  1 JAN 1559 240       8.        .6   100.5
   1 JAN 1240  41       2.        .1   100.1 *  1 JAN 1420 141       3.        .2   100.2 *  1 JAN 1600 241       8.        .7   100.5
   1 JAN 1241  42       2.        .1   100.1 *  1 JAN 1421 142       3.        .2   100.2 *  1 JAN 1601 242       9.        .7   100.5
   1 JAN 1242  43       2.        .1   100.1 *  1 JAN 1422 143       3.        .2   100.2 *  1 JAN 1602 243       9.        .7   100.6
   1 JAN 1243  44       2.        .1   100.1 *  1 JAN 1423 144       3.        .2   100.2 *  1 JAN 1603 244      10.        .8   100.6
   1 JAN 1244  45       2.        .1   100.1 *  1 JAN 1424 145       3.        .2   100.2 *  1 JAN 1604 245      11.        .9   100.6
   1 JAN 1245  46       2.        .1   100.1 *  1 JAN 1425 146       3.        .2   100.2 *  1 JAN 1605 246      11.        .9   100.7
   1 JAN 1246  47       2.        .1   100.1 *  1 JAN 1426 147       3.        .3   100.2 *  1 JAN 1606 247      12.       1.0   100.7
   1 JAN 1247  48       2.        .1   100.1 *  1 JAN 1427 148       3.        .3   100.2 *  1 JAN 1607 248      13.       1.1   100.8
   1 JAN 1248  49       2.        .1   100.1 *  1 JAN 1428 149       3.        .3   100.2 *  1 JAN 1608 249      14.       1.1   100.8
   1 JAN 1249  50       2.        .2   100.1 *  1 JAN 1429 150       3.        .3   100.2 *  1 JAN 1609 250      14.       1.2   100.9
   1 JAN 1250  51       2.        .2   100.1 *  1 JAN 1430 151       3.        .3   100.2 *  1 JAN 1610 251      15.       1.2   100.9
   1 JAN 1251  52       2.        .2   100.1 *  1 JAN 1431 152       3.        .3   100.2 *  1 JAN 1611 252      15.       1.3   100.9
   1 JAN 1252  53       2.        .2   100.1 *  1 JAN 1432 153       3.        .3   100.2 *  1 JAN 1612 253      16.       1.3   101.0
   1 JAN 1253  54       2.        .2   100.1 *  1 JAN 1433 154       3.        .3   100.2 *  1 JAN 1613 254      16.       1.3   101.0
   1 JAN 1254  55       2.        .2   100.1 *  1 JAN 1434 155       3.        .3   100.2 *  1 JAN 1614 255      28.       1.3   102.0
   1 JAN 1255  56       2.        .2   100.1 *  1 JAN 1435 156       3.        .3   100.2 *  1 JAN 1615 256      24.       1.3   101.6
   1 JAN 1256  57       2.        .2   100.1 *  1 JAN 1436 157       3.        .3   100.2 *  1 JAN 1616 257      18.       1.3   101.2
   1 JAN 1257  58       2.        .2   100.1 *  1 JAN 1437 158       3.        .3   100.2 *  1 JAN 1617 258      16.       1.3   101.0
   1 JAN 1258  59       2.        .2   100.1 *  1 JAN 1438 159       3.        .3   100.2 *  1 JAN 1618 259      16.       1.3   101.0
   1 JAN 1259  60       2.        .2   100.1 *  1 JAN 1439 160       3.        .3   100.2 *  1 JAN 1619 260      16.       1.3   101.0
   1 JAN 1300  61       2.        .2   100.1 *  1 JAN 1440 161       3.        .3   100.2 *  1 JAN 1620 261      16.       1.3   101.0
   1 JAN 1301  62       2.        .2   100.1 *  1 JAN 1441 162       3.        .3   100.2 *  1 JAN 1621 262      16.       1.3   101.0
   1 JAN 1302  63       2.        .2   100.1 *  1 JAN 1442 163       3.        .3   100.2 *  1 JAN 1622 263      16.       1.3   101.0
   1 JAN 1303  64       2.        .2   100.1 *  1 JAN 1443 164       3.        .3   100.2 *  1 JAN 1623 264      16.       1.3   101.0
   1 JAN 1304  65       2.        .2   100.1 *  1 JAN 1444 165       3.        .3   100.2 *  1 JAN 1624 265      15.       1.3   100.9
   1 JAN 1305  66       2.        .2   100.1 *  1 JAN 1445 166       3.        .3   100.2 *  1 JAN 1625 266      15.       1.3   100.9
   1 JAN 1306  67       2.        .2   100.1 *  1 JAN 1446 167       3.        .3   100.2 *  1 JAN 1626 267      15.       1.2   100.9
   1 JAN 1307  68       2.        .2   100.1 *  1 JAN 1447 168       3.        .3   100.2 *  1 JAN 1627 268      15.       1.2   100.9
   1 JAN 1308  69       2.        .2   100.1 *  1 JAN 1448 169       3.        .3   100.2 *  1 JAN 1628 269      15.       1.2   100.9
   1 JAN 1309  70       2.        .2   100.1 *  1 JAN 1449 170       4.        .3   100.2 *  1 JAN 1629 270      15.       1.2   100.9
```

```
   1 JAN 1310  71       2.       .2   100.1 *  1 JAN 1450 171       4.       .3   100.2 *  1 JAN 1630 271      15.      1.2   100.9
   1 JAN 1311  72       2.       .2   100.1 *  1 JAN 1451 172       4.       .3   100.2 *  1 JAN 1631 272      14.      1.2   100.9
   1 JAN 1312  73       2.       .2   100.1 *  1 JAN 1452 173       4.       .3   100.2 *  1 JAN 1632 273      14.      1.2   100.9
   1 JAN 1313  74       2.       .2   100.1 *  1 JAN 1453 174       4.       .3   100.2 *  1 JAN 1633 274      14.      1.2   100.9
   1 JAN 1314  75       2.       .2   100.1 *  1 JAN 1454 175       4.       .3   100.2 *  1 JAN 1634 275      14.      1.2   100.9
   1 JAN 1315  76       2.       .2   100.1 *  1 JAN 1455 176       4.       .3   100.2 *  1 JAN 1635 276      14.      1.1   100.9
   1 JAN 1316  77       2.       .2   100.1 *  1 JAN 1456 177       4.       .3   100.2 *  1 JAN 1636 277      14.      1.1   100.8
   1 JAN 1317  78       2.       .2   100.1 *  1 JAN 1457 178       4.       .3   100.2 *  1 JAN 1637 278      14.      1.1   100.8
   1 JAN 1318  79       2.       .2   100.1 *  1 JAN 1458 179       4.       .3   100.2 *  1 JAN 1638 279      13.      1.1   100.8
   1 JAN 1319  80       2.       .2   100.1 *  1 JAN 1459 180       4.       .3   100.2 *  1 JAN 1639 280      13.      1.1   100.8
   1 JAN 1320  81       2.       .2   100.1 *  1 JAN 1500 181       4.       .3   100.2 *  1 JAN 1640 281      13.      1.1   100.8
   1 JAN 1321  82       2.       .2   100.1 *  1 JAN 1501 182       4.       .3   100.2 *  1 JAN 1641 282      13.      1.1   100.8
   1 JAN 1322  83       2.       .2   100.1 *  1 JAN 1502 183       4.       .3   100.2 *  1 JAN 1642 283      13.      1.1   100.8
   1 JAN 1323  84       2.       .2   100.1 *  1 JAN 1503 184       4.       .3   100.2 *  1 JAN 1643 284      13.      1.0   100.8
   1 JAN 1324  85       2.       .2   100.1 *  1 JAN 1504 185       4.       .3   100.2 *  1 JAN 1644 285      13.      1.0   100.8
   1 JAN 1325  86       2.       .2   100.1 *  1 JAN 1505 186       4.       .3   100.2 *  1 JAN 1645 286      13.      1.0   100.8
   1 JAN 1326  87       2.       .2   100.1 *  1 JAN 1506 187       4.       .3   100.2 *  1 JAN 1646 287      12.      1.0   100.8
   1 JAN 1327  88       2.       .2   100.1 *  1 JAN 1507 188       4.       .3   100.2 *  1 JAN 1647 288      12.      1.0   100.8
   1 JAN 1328  89       2.       .2   100.1 *  1 JAN 1508 189       4.       .3   100.2 *  1 JAN 1648 289      12.      1.0   100.7
   1 JAN 1329  90       2.       .2   100.1 *  1 JAN 1509 190       4.       .3   100.2 *  1 JAN 1649 290      12.      1.0   100.7
   1 JAN 1330  91       2.       .2   100.1 *  1 JAN 1510 191       4.       .3   100.2 *  1 JAN 1650 291      12.      1.0   100.7
   1 JAN 1331  92       2.       .2   100.1 *  1 JAN 1511 192       4.       .3   100.3 *  1 JAN 1651 292      12.      1.0   100.7
   1 JAN 1332  93       2.       .2   100.1 *  1 JAN 1512 193       4.       .3   100.3 *  1 JAN 1652 293      12.      1.0   100.7
   1 JAN 1333  94       2.       .2   100.1 *  1 JAN 1513 194       4.       .3   100.3 *  1 JAN 1653 294      12.       .9   100.7
   1 JAN 1334  95       2.       .2   100.1 *  1 JAN 1514 195       4.       .3   100.3 *  1 JAN 1654 295      11.       .9   100.7
   1 JAN 1335  96       2.       .2   100.1 *  1 JAN 1515 196       4.       .3   100.3 *  1 JAN 1655 296      11.       .9   100.7
   1 JAN 1336  97       2.       .2   100.1 *  1 JAN 1516 197       4.       .3   100.3 *  1 JAN 1656 297      11.       .9   100.7
   1 JAN 1337  98       2.       .2   100.1 *  1 JAN 1517 198       4.       .4   100.3 *  1 JAN 1657 298      11.       .9   100.7
   1 JAN 1338  99       2.       .2   100.1 *  1 JAN 1518 199       4.       .4   100.3 *  1 JAN 1658 299      11.       .9   100.7
   1 JAN 1339 100       2.       .2   100.1 *  1 JAN 1519 200       4.       .4   100.3 *  1 JAN 1659 300      11.       .9   100.7
                                            *                                           *
 ***********************************************************************************************************************************

  PEAK FLOW     TIME                          MAXIMUM AVERAGE FLOW
                                      6-HR       24-HR       72-HR      4.98-HR
+   (CFS)       (HR)
                           (CFS)
+      28.      4.23                    5.          5.          5.           5.
                        (INCHES)     1.071       1.071       1.071        1.071
                         (AC-FT)        2.          2.          2.           2.

 PEAK STORAGE   TIME                         MAXIMUM AVERAGE STORAGE
                                      6-HR       24-HR       72-HR      4.98-HR
+  (AC-FT)      (HR)
        1.      4.23                    0.          0.          0.           0.

  PEAK STAGE    TIME                          MAXIMUM AVERAGE STAGE
                                      6-HR       24-HR       72-HR      4.98-HR
+   (FEET)      (HR)
    101.96      4.23                100.32      100.32      100.32       100.32

                         CUMULATIVE AREA =     .04 SQ MI

1                                                          STATION     DET1

                          (I) INFLOW,   (O) OUTFLOW
          0.        10.        20.        30.        40.        50.        60.        70.         0.         0.         0.         0.         0.
                                                                                 (S) STORAGE
          .0        .0        .0        .0        .0        .0        .0        .4        .8       1.2       1.6        .0        .0
 DAHRMN PER
  11200   1.I--------.---------.---------.---------.---------.---------.-S-------.---------.---------.---------.---------.---------.
  11201   2.I        .         .         .         .         .         . S       .         .         .         .         .         .
  11202   3.OI       .         .         .         .         .         . S       .         .         .         .         .         .
  11203   4.OI       .         .         .         .         .         . S       .         .         .         .         .         .
  11204   5.OI       .         .         .         .         .         . S       .         .         .         .         .         .
  11205   6.OI       .         .         .         .         .         . S       .         .         .         .         .         .
  11206   7.OI       .         .         .         .         .         . S       .         .         .         .         .         .
  11207   8.OI       .         .         .         .         .         .  S      .         .         .         .         .         .
  11208   9.OI       .         .         .         .         .         .  S      .         .         .         .         .         .
  11209  10.OI       .         .         .         .         .         .  S      .         .         .         .         .         .
  11210  11.OI . . . . . . . . . . . . . . . . . . . . . . . . . . . . . .S. . . . . . . . . . . . . . . . . . . . . . . . . . . . .
  11211  12.OI       .         .         .         .         .         .  S      .         .         .         .         .         .
  11212  13.OI       .         .         .         .         .         .  S      .         .         .         .         .         .
  11213  14.OI       .         .         .         .         .         .  S      .         .         .         .         .         .
  11214  15.OI       .         .         .         .         .         .  S      .         .         .         .         .         .
  11215  16.OI       .         .         .         .         .         .  S      .         .         .         .         .         .
  11216  17.OI       .         .         .         .         .         .  S      .         .         .         .         .         .
  11217  18.OI       .         .         .         .         .         .  S      .         .         .         .         .         .
  11218  19.OI       .         .         .         .         .         .  S      .         .         .         .         .         .
  11219  20.OI       .         .         .         .         .         .  S      .         .         .         .         .         .
  11220  21.OI . . . . . . . . . . . . . . . . . . . . . . . . . . . . . .S. . . . . . . . . . . . . . . . . . . . . . . . . . . . .
  11221  22.OI       .         .         .         .         .         .  S      .         .         .         .         .         .
  11222  23.OI       .         .         .         .         .         .  S      .         .         .         .         .         .
  11223  24.OI       .         .         .         .         .         .  S      .         .         .         .         .         .
```

```
11224  25.OI       .         .         .         .         .         .  S      .         .         .         .         .         .
11225  26. I       .         .         .         .         .         .  S      .         .         .         .         .         .
11226  27. I       .         .         .         .         .         .  S      .         .         .         .         .         .
11227  28. I       .         .         .         .         .         .  S      .         .         .         .         .         .
11228  29. I       .         .         .         .         .         .  S      .         .         .         .         .         .
11229  30. I       .         .         .         .         .         .  S      .         .         .         .         .         .
11230  31. OI. . . . . . . . . . . . . . . . . . . . . . . . . . . . . .S. . . . . . . . . . . . . . . . . . . . . . . . . . . . .
11231  32. OI      .         .         .         .         .         .  S      .         .         .         .         .         .
11232  33. OI      .         .         .         .         .         .  S      .         .         .         .         .         .
11233  34. OI      .         .         .         .         .         .  S      .         .         .         .         .         .
11234  35. OI      .         .         .         .         .         .  S      .         .         .         .         .         .
11235  36. OI      .         .         .         .         .         .  S      .         .         .         .         .         .
11236  37. OI      .         .         .         .         .         .  S      .         .         .         .         .         .
11237  38. OI      .         .         .         .         .         .  S      .         .         .         .         .         .
11238  39. OI      .         .         .         .         .         .  S      .         .         .         .         .         .
11239  40. OI      .         .         .         .         .         .   S     .         .         .         .         .         .
11240  41. OI. . . . . . . . . . . . . . . . . . . . . . . . . . . . . . S . . . . . . . . . . . . . . . . . . . . . . . . . . . .
11241  42. OI      .         .         .         .         .         .   S     .         .         .         .         .         .
11242  43. OI      .         .         .         .         .         .   S     .         .         .         .         .         .
11243  44. OI      .         .         .         .         .         .   S     .         .         .         .         .         .
11244  45. OI      .         .         .         .         .         .   S     .         .         .         .         .         .
11245  46. OI      .         .         .         .         .         .   S     .         .         .         .         .         .
11246  47. OI      .         .         .         .         .         .   S     .         .         .         .         .         .
11247  48. OI      .         .         .         .         .         .   S     .         .         .         .         .         .
11248  49. OI      .         .         .         .         .         .   S     .         .         .         .         .         .
11249  50. OI      .         .         .         .         .         .   S     .         .         .         .         .         .
11250  51. OI. . . . . . . . . . . . . . . . . . . . . . . . . . . . . . S . . . . . . . . . . . . . . . . . . . . . . . . . . . .
11251  52. OI      .         .         .         .         .         .   S     .         .         .         .         .         .
11252  53. OI      .         .         .         .         .         .   S     .         .         .         .         .         .
11253  54. OI      .         .         .         .         .         .   S     .         .         .         .         .         .
11254  55. OI      .         .         .         .         .         .   S     .         .         .         .         .         .
11255  56. OI      .         .         .         .         .         .   S     .         .         .         .         .         .
11256  57. OI      .         .         .         .         .         .   S     .         .         .         .         .         .
11257  58. OI      .         .         .         .         .         .   S     .         .         .         .         .         .
11258  59. OI      .         .         .         .         .         .   S     .         .         .         .         .         .
11259  60. OI      .         .         .         .         .         .   S     .         .         .         .         .         .
11300  61. OI. . . . . . . . . . . . . . . . . . . . . . . . . . . . . . S . . . . . . . . . . . . . . . . . . . . . . . . . . . .
11301  62. OI      .         .         .         .         .         .   S     .         .         .         .         .         .
11302  63. OI      .         .         .         .         .         .   S     .         .         .         .         .         .
11303  64. OI      .         .         .         .         .         .   S     .         .         .         .         .         .
11304  65. OI      .         .         .         .         .         .   S     .         .         .         .         .         .
11305  66. OI      .         .         .         .         .         .   S     .         .         .         .         .         .
11306  67. OI      .         .         .         .         .         .   S     .         .         .         .         .         .
11307  68. OI      .         .         .         .         .         .   S     .         .         .         .         .         .
11308  69. OI      .         .         .         .         .         .   S     .         .         .         .         .         .
11309  70. OI      .         .         .         .         .         .   S     .         .         .         .         .         .
11310  71. OI. . . . . . . . . . . . . . . . . . . . . . . . . . . . . . S . . . . . . . . . . . . . . . . . . . . . . . . . . . .
11311  72. OI      .         .         .         .         .         .   S     .         .         .         .         .         .
11312  73. OI      .         .         .         .         .         .   S     .         .         .         .         .         .
11313  74. OI      .         .         .         .         .         .   S     .         .         .         .         .         .
11314  75. OI      .         .         .         .         .         .   S     .         .         .         .         .         .
11315  76. OI      .         .         .         .         .         .   S     .         .         .         .         .         .
11316  77. OI      .         .         .         .         .         .   S     .         .         .         .         .         .
11317  78. OI      .         .         .         .         .         .   S     .         .         .         .         .         .
11318  79. OI      .         .         .         .         .         .   S     .         .         .         .         .         .
11319  80. OI      .         .         .         .         .         .    S    .         .         .         .         .         .
11320  81. OI. . . . . . . . . . . . . . . . . . . . . . . . . . . . . . .S. . . . . . . . . . . . . . . . . . . . . . . . . . . .
11321  82. OI      .         .         .         .         .         .    S    .         .         .         .         .         .
11322  83. OI      .         .         .         .         .         .    S    .         .         .         .         .         .
11323  84. OI      .         .         .         .         .         .    S    .         .         .         .         .         .
11324  85. OI      .         .         .         .         .         .    S    .         .         .         .         .         .
11325  86. OI      .         .         .         .         .         .    S    .         .         .         .         .         .
11326  87. OI      .         .         .         .         .         .    S    .         .         .         .         .         .
11327  88. OI      .         .         .         .         .         .    S    .         .         .         .         .         .
11328  89. OI      .         .         .         .         .         .    S    .         .         .         .         .         .
11329  90. OI      .         .         .         .         .         .    S    .         .         .         .         .         .
11330  91. OI. . . . . . . . . . . . . . . . . . . . . . . . . . . . . . .S. . . . . . . . . . . . . . . . . . . . . . . . . . . .
11331  92. OI      .         .         .         .         .         .    S    .         .         .         .         .         .
11332  93. OI      .         .         .         .         .         .    S    .         .         .         .         .         .
11333  94. OI      .         .         .         .         .         .    S    .         .         .         .         .         .
11334  95. OI      .         .         .         .         .         .    S    .         .         .         .         .         .
11335  96. OI      .         .         .         .         .         .    S    .         .         .         .         .         .
11336  97. OI      .         .         .         .         .         .    S    .         .         .         .         .         .
11337  98. OI      .         .         .         .         .         .    S    .         .         .         .         .         .
11338  99. OI      .         .         .         .         .         .    S    .         .         .         .         .         .
11339 100. OI      .         .         .         .         .         .    S    .         .         .         .         .         .
11340 101. OI. . . . . . . . . . . . . . . . . . . . . . . . . . . . . . .S. . . . . . . . . . . . . . . . . . . . . . . . . . . .
11341 102. OI      .         .         .         .         .         .    S    .         .         .         .         .         .
11342 103. OI      .         .         .         .         .         .    S    .         .         .         .         .         .
11343 104. OI      .         .         .         .         .         .    S    .         .         .         .         .         .
11344 105. OI      .         .         .         .         .         .    S    .         .         .         .         .         .
11345 106.  I      .         .         .         .         .         .    S    .         .         .         .         .         .
11346 107.  I      .         .         .         .         .         .    S    .         .         .         .         .         .
11347 108.  I      .         .         .         .         .         .    S    .         .         .         .         .         .
```

```
11348 109.  I      .         .         .         .         .    S    .         .         .         .         .
11349 110.  I      .         .         .         .         .    S    .         .         .         .         .
11350 111. .I. . . . . . . . . . . . . . . . . . . . . . . . . . . . .S. . . . . . . . . . . . . . . . . . . . . . . . . . . .
11351 112.  I      .         .         .         .         .    S    .         .         .         .         .
11352 113.  I      .         .         .         .         .    S    .         .         .         .         .
11353 114.  I      .         .         .         .         .    S    .         .         .         .         .
11354 115.  I      .         .         .         .         .    S    .         .         .         .         .
11355 116.  I      .         .         .         .         .    S    .         .         .         .         .
11356 117.  I      .         .         .         .         .    S    .         .         .         .         .
11357 118.  I      .         .         .         .         .    S    .         .         .         .         .
11358 119.  I      .         .         .         .         .    S    .         .         .         .         .
11359 120.  I      .         .         .         .         .    S    .         .         .         .         .
11400 121. .I. . . . . . . . . . . . . . . . . . . . . . . . . . . . . S . . . . . . . . . . . . . . . . . . . . . . . . . . . .
11401 122.  I      .         .         .         .         .     S   .         .         .         .         .
11402 123.  OI     .         .         .         .         .     S   .         .         .         .         .
11403 124.  OI     .         .         .         .         .     S   .         .         .         .         .
11404 125.  OI     .         .         .         .         .     S   .         .         .         .         .
11405 126.  OI     .         .         .         .         .     S   .         .         .         .         .
11406 127.  OI     .         .         .         .         .     S   .         .         .         .         .
11407 128.  OI     .         .         .         .         .     S   .         .         .         .         .
11408 129.  OI     .         .         .         .         .     S   .         .         .         .         .
11409 130.  OI     .         .         .         .         .     S   .         .         .         .         .
11410 131. .OI . . . . . . . . . . . . . . . . . . . . . . . . . . . . S . . . . . . . . . . . . . . . . . . . . . . . . . . . .
11411 132.  OI     .         .         .         .         .     S   .         .         .         .         .
11412 133.  OI     .         .         .         .         .     S   .         .         .         .         .
11413 134.  OI     .         .         .         .         .     S   .         .         .         .         .
11414 135.  OI     .         .         .         .         .     S   .         .         .         .         .
11415 136.  OI     .         .         .         .         .     S   .         .         .         .         .
11416 137.  OI     .         .         .         .         .     S   .         .         .         .         .
11417 138.  OI     .         .         .         .         .     S   .         .         .         .         .
11418 139.  OI     .         .         .         .         .     S   .         .         .         .         .
11419 140.  OI     .         .         .         .         .     S   .         .         .         .         .
11420 141. .OI . . . . . . . . . . . . . . . . . . . . . . . . . . . . S . . . . . . . . . . . . . . . . . . . . . . . . . . . .
11421 142.  OI     .         .         .         .         .     S   .         .         .         .         .
11422 143.  OI     .         .         .         .         .     S   .         .         .         .         .
11423 144.  OI     .         .         .         .         .     S   .         .         .         .         .
11424 145.  OI     .         .         .         .         .     S   .         .         .         .         .
11425 146.  OI     .         .         .         .         .     S   .         .         .         .         .
11426 147.  OI     .         .         .         .         .     S   .         .         .         .         .
11427 148.  OI     .         .         .         .         .     S   .         .         .         .         .
11428 149.  OI     .         .         .         .         .     S   .         .         .         .         .
11429 150.  OI     .         .         .         .         .     S   .         .         .         .         .
11430 151. .OI . . . . . . . . . . . . . . . . . . . . . . . . . . . . S . . . . . . . . . . . . . . . . . . . . . . . . . . . .
11431 152.  OI     .         .         .         .         .     S   .         .         .         .         .
11432 153.  OI     .         .         .         .         .     S   .         .         .         .         .
11433 154.  OI     .         .         .         .         .      S  .         .         .         .         .
11434 155.  OI     .         .         .         .         .      S  .         .         .         .         .
11435 156.  OI     .         .         .         .         .      S  .         .         .         .         .
11436 157.  OI     .         .         .         .         .      S  .         .         .         .         .
11437 158.  OI     .         .         .         .         .      S  .         .         .         .         .
11438 159.  OI     .         .         .         .         .      S  .         .         .         .         .
11439 160.  OI     .         .         .         .         .      S  .         .         .         .         .
11440 161. .OI . . . . . . . . . . . . . . . . . . . . . . . . . . . . .S. . . . . . . . . . . . . . . . . . . . . . . . . . .
11441 162.  OI     .         .         .         .         .      S  .         .         .         .         .
11442 163.  O I    .         .         .         .         .      S  .         .         .         .         .
11443 164.  O I    .         .         .         .         .      S  .         .         .         .         .
11444 165.  O I    .         .         .         .         .      S  .         .         .         .         .
11445 166.  O I    .         .         .         .         .      S  .         .         .         .         .
11446 167.  O I    .         .         .         .         .      S  .         .         .         .         .
11447 168.  O I    .         .         .         .         .      S  .         .         .         .         .
11448 169.  O I    .         .         .         .         .      S  .         .         .         .         .
11449 170.   OI    .         .         .         .         .      S  .         .         .         .         .
11450 171. . OI. . . . . . . . . . . . . . . . . . . . . . . . . . . . .S. . . . . . . . . . . . . . . . . . . . . . . . . .
11451 172.   OI    .         .         .         .         .      S  .         .         .         .         .
11452 173.   OI    .         .         .         .         .      S  .         .         .         .         .
11453 174.   OI    .         .         .         .         .      S  .         .         .         .         .
11454 175.   OI    .         .         .         .         .      S  .         .         .         .         .
11455 176.   OI    .         .         .         .         .      S  .         .         .         .         .
11456 177.   OI    .         .         .         .         .       S .         .         .         .         .
11457 178.   OI    .         .         .         .         .       S .         .         .         .         .
11458 179.   OI    .         .         .         .         .       S .         .         .         .         .
11459 180.   OI    .         .         .         .         .       S .         .         .         .         .
11500 181. . OI. . . . . . . . . . . . . . . . . . . . . . . . . . . . . S . . . . . . . . . . . . . . . . . . . . . . . . . .
11501 182.   OI    .         .         .         .         .       S .         .         .         .         .
11502 183.   OI    .         .         .         .         .       S .         .         .         .         .
11503 184.   OI    .         .         .         .         .       S .         .         .         .         .
11504 185.   OI    .         .         .         .         .       S .         .         .         .         .
11505 186.   OI    .         .         .         .         .       S .         .         .         .         .
11506 187.   O I   .         .         .         .         .       S .         .         .         .         .
11507 188.   O I   .         .         .         .         .       S .         .         .         .         .
11508 189.   O I   .         .         .         .         .       S .         .         .         .         .
11509 190.   O I   .         .         .         .         .       S .         .         .         .         .
11510 191. . O I . . . . . . . . . . . . . . . . . . . . . . . . . . . . S . . . . . . . . . . . . . . . . . . . . . . . . . .
11511 192.   O I   .         .         .         .         .       S .         .         .         .         .
```

```
11512 193.   O I   .         .         .         .         .         .       S .         .         .         .         .         .
11513 194.   O I   .         .         .         .         .         .       S .         .         .         .         .         .
11514 195.   O I   .         .         .         .         .         .        S.         .         .         .         .         .
11515 196.   O I   .         .         .         .         .         .        S.         .         .         .         .         .
11516 197.   O  I  .         .         .         .         .         .        S.         .         .         .         .         .
11517 198.   O  I  .         .         .         .         .         .        S.         .         .         .         .         .
11518 199.   O  I  .         .         .         .         .         .        S.         .         .         .         .         .
11519 200.   O  I  .         .         .         .         .         .        S.         .         .         .         .         .
11520 201. . O .I. . . . . . . . . . . . . . . . . . . . . . . . . . . . . .S. . . . . . . . . . . . . . . . . . . . . . . . . .
11521 202.   O  I  .         .         .         .         .         .        S.         .         .         .         .         .
11522 203.    O I  .         .         .         .         .         .        S.         .         .         .         .         .
11523 204.    O I  .         .         .         .         .         .        S.         .         .         .         .         .
11524 205.    O I  .         .         .         .         .         .        S.         .         .         .         .         .
11525 206.    O I  .         .         .         .         .         .         S         .         .         .         .         .
11526 207.    O I  .         .         .         .         .         .         S         .         .         .         .         .
11527 208.    O I  .         .         .         .         .         .         S         .         .         .         .         .
11528 209.    O  I .         .         .         .         .         .         S         .         .         .         .         .
11529 210.    O  I .         .         .         .         .         .         S         .         .         .         .         .
11530 211. . .O. I . . . . . . . . . . . . . . . . . . . . . . . . . . . . . S . . . . . . . . . . . . . . . . . . . . . . . . .
11531 212.    O  I .         .         .         .         .         .         S         .         .         .         .         .
11532 213.    O  I .         .         .         .         .         .         S         .         .         .         .         .
11533 214.    O   I.         .         .         .         .         .         S         .         .         .         .         .
11534 215.    O   I.         .         .         .         .         .         S         .         .         .         .         .
11535 216.    O   I.         .         .         .         .         .         .S        .         .         .         .         .
11536 217.    O    I         .         .         .         .         .         .S        .         .         .         .         .
11537 218.    O    I         .         .         .         .         .         .S        .         .         .         .         .
11538 219.    O    I         .         .         .         .         .         .S        .         .         .         .         .
11539 220.    O    I         .         .         .         .         .         .S        .         .         .         .         .
11540 221. . . O . .I. . . . . . . . . . . . . . . . . . . . . . . . . . . . .S. . . . . . . . . . . . . . . . . . . . . . . . .
11541 222.     O   .I        .         .         .         .         .         . S       .         .         .         .         .
11542 223.     O   .I        .         .         .         .         .         . S       .         .         .         .         .
11543 224.     O   .I        .         .         .         .         .         . S       .         .         .         .         .
11544 225.     O   .I        .         .         .         .         .         . S       .         .         .         .         .
11545 226.     O   .I        .         .         .         .         .         . S       .         .         .         .         .
11546 227.     O   I         .         .         .         .         .         . S       .         .         .         .         .
11547 228.     O   I         .         .         .         .         .         .  S      .         .         .         .         .
11548 229.     O   I         .         .         .         .         .         .  S      .         .         .         .         .
11549 230.     O   I         .         .         .         .         .         .  S      .         .         .         .         .
11550 231. . . O .I. . . . . . . . . . . . . . . . . . . . . . . . . . . . . .S. . . . . . . . . . . . . . . . . . . . . . . .
11551 232.     O  I.         .         .         .         .         .         .  S      .         .         .         .         .
11552 233.     O  I.         .         .         .         .         .         .  S      .         .         .         .         .
11553 234.     O  I.         .         .         .         .         .         .  S      .         .         .         .         .
11554 235.     O  I.         .         .         .         .         .         .  S      .         .         .         .         .
11555 236.      O  .  I      .         .         .         .         .         .  S      .         .         .         .         .
11556 237.      O  .       I .         .         .         .         .         .   S     .         .         .         .         .
11557 238.      O  .         .  I      .         .         .         .         .   S     .         .         .         .         .
11558 239.      O  .         .      I  .         .         .         .         .    S    .         .         .         .         .
11559 240.       O .         .         . I       .         .         .         .     S   .         .         .         .         .
11600 241. . . . O . . . . . . . . . . . . .I. . . . . . . . . . . . . . . . . . S . . . . . . . . . . . . . . . . . . . . . . .
11601 242.        O.         .         .         .I        .         .         .       S .         .         .         .         .
11602 243.        O.         .         .         .     I   .         .         .        S.         .         .         .         .
11603 244.         O         .         .         .         .I        .         .         S         .         .         .         .
11604 245.         .O        .         .         .         .    I    .         .         . S       .         .         .         .
11605 246.         .O        .         .         .         .         I         .         .  S      .         .         .         .
11606 247.         . O       .         .         .         .         .    I    .         .    S    .         .         .         .
11607 248.         .  O      .         .         .         .         I         .         .      S  .         .         .         .
11608 249.         .   O     .         .         .         .     I   .         .         .       S .         .         .         .
11609 250.         .   O     .         .         .         .I        .         .         .         S         .         .         .
11610 251. . . . . . . .O. . . . . . . . . . . . I . . . . . . . . . . . . . . . . . . . . .S. . . . . . . . . . . . . . .
11611 252.         .    O    .         .         . I       .         .         .         .         . S       .         .         .
11612 253.         .     O   .         .      I  .         .         .         .         .         . S       .         .         .
11613 254.         .     O   .         . I       .         .         .         .         .         .  S      .         .         .
11614 255.         .         .       I .         .         .         .         .         .         .  S      .         .         .
11615 256.         .         .  IO     .         .         .         .         .         .         .  S      .         .         .
11616 257.         .       I .         .         .         .         .         .         .         .  S      .         .         .
11617 258.         .   I O   .         .         .         .         .         .         .         .  S      .         .         .
11618 259.        I.     O   .         .         .         .         .         .         .         .  S      .         .         .
11619 260.        I.     O   .         .         .         .         .         .         .         .  S      .         .         .
11620 261. . . . .I. . . O . . . . . . . . . . . . . . . . . . . . . . . . . . . . . . . . . . . .S. . . . . . . . . . . . . .
11621 262.       I .     O   .         .         .         .         .         .         .         . S       .         .         .
11622 263.       I .     O   .         .         .         .         .         .         .         . S       .         .         .
11623 264.       I .     O   .         .         .         .         .         .         .         . S       .         .         .
11624 265.       I .    O    .         .         .         .         .         .         .         . S       .         .         .
11625 266.      I  .    O    .         .         .         .         .         .         .         .S        .         .         .
11626 267.      I  .    O    .         .         .         .         .         .         .         .S        .         .         .
11627 268.      I  .    O    .         .         .         .         .         .         .         .S        .         .         .
11628 269.      I  .    O    .         .         .         .         .         .         .         .S        .         .         .
11629 270.     I   .    O    .         .         .         .         .         .         .         S         .         .         .
11630 271. . I . . . .O. . . . . . . . . . . . . . . . . . . . . . . . . . . . . . . . . . . . . . . S . . . . . . . . . . . . . . .
11631 272.     I   .   O     .         .         .         .         .         .         .         S         .         .         .
11632 273.     I   .   O     .         .         .         .         .         .         .        S.         .         .         .
11633 274.     I   .   O     .         .         .         .         .         .         .        S.         .         .         .
11634 275.     I   .   O     .         .         .         .         .         .         .        S.         .         .         .
11635 276.     I   .   O     .         .         .         .         .         .         .       S .         .         .         .
```

```
  11636 277.    I    .   O     .         .         .         .         .         .         .       S .         .         .         .
  11637 278.    I    .   O     .         .         .         .         .         .         .       S .         .         .         .
  11638 279.    I    .  O      .         .         .         .         .         .         .       S .         .         .         .
  11639 280.    I    .  O      .         .         .         .         .         .         .      S  .         .         .         .
  11640 281. . .I. . . .O. . . . . . . . . . . . . . . . . . . . . . . . . . . . . . . . . . . . .S. . . . . . . . . . . . . . . . .
  11641 282.    I    .  O      .         .         .         .         .         .         .      S  .         .         .         .
  11642 283.    I    .  O      .         .         .         .         .         .         .     S   .         .         .         .
  11643 284.    I    .  O      .         .         .         .         .         .         .     S   .         .         .         .
  11644 285.    I    .  O      .         .         .         .         .         .         .     S   .         .         .         .
  11645 286.    I    .  O      .         .         .         .         .         .         .     S   .         .         .         .
  11646 287.    I    . O       .         .         .         .         .         .         .    S    .         .         .         .
  11647 288.   I     . O       .         .         .         .         .         .         .    S    .         .         .         .
  11648 289.   I     . O       .         .         .         .         .         .         .    S    .         .         .         .
  11649 290.   I     . O       .         .         .         .         .         .         .    S    .         .         .         .
  11650 291. . I . . . O . . . . . . . . . . . . . . . . . . . . . . . . . . . . . . . . . . . S . . . . . . . . . . . . . . . . . .
  11651 292.   I     . O       .         .         .         .         .         .         .   S     .         .         .         .
  11652 293.   I     . O       .         .         .         .         .         .         .   S     .         .         .         .
  11653 294.   I     . O       .         .         .         .         .         .         .   S     .         .         .         .
  11654 295.   I     .O        .         .         .         .         .         .         .  S      .         .         .         .
  11655 296.   I     .O        .         .         .         .         .         .         .  S      .         .         .         .
  11656 297.   I     .O        .         .         .         .         .         .         .  S      .         .         .         .
  11657 298.   I     .O        .         .         .         .         .         .         .  S      .         .         .         .
  11658 299.   I     .O        .         .         .         .         .         .         . S       .         .         .         .
  11659 300.---I-----.O--------.---------.---------.---------.---------.---------.---------.-S-------.---------.---------.---------.
1
1
                                                           RUNOFF SUMMARY
                                                   FLOW IN CUBIC FEET PER SECOND
                                                TIME IN HOURS,  AREA IN SQUARE MILES

                                       PEAK   TIME OF     AVERAGE FLOW FOR MAXIMUM PERIOD      BASIN     MAXIMUM     TIME OF
          OPERATION       STATION      FLOW     PEAK                                            AREA      STAGE     MAX STAGE
+                                                          6-HOUR     24-HOUR     72-HOUR

          HYDROGRAPH AT
+                        SWVHD200        65.    4.10           7.          7.          7.        .04

          ROUTED TO
+                            DET1        28.    4.23           5.          5.          5.        .04
+                                                                                                         101.96        4.23


 *** NORMAL END OF HEC-1 ***
```

```
1*****************************************                                                  ***************************************
 *                                       *                                                  *                                     *
 *   FLOOD HYDROGRAPH PACKAGE  (HEC-1)   *                                                  *    U.S. ARMY CORPS OF ENGINEERS     *
 *               JUN   1998              *                                                  *    HYDROLOGIC ENGINEERING CENTER    *
 *            VERSION 4.1                *                                                  *          609 SECOND STREET          *
 *                                       *                                                  *       DAVIS, CALIFORNIA 95616       *
 *  RUN DATE   17FEB22  TIME  14:36:17   *                                                  *           (916) 756-1104            *
 *                                       *                                                  *                                     *
 *****************************************                                                  ***************************************
```

Detention Routing
Calculation for Basin 300

```
                                                 X     X  XXXXXXX   XXXXX           X
                                                 X     X  X        X     X         XX
                                                 X     X  X        X                X
                                                 XXXXXXX  XXXX     X       XXXXX    X
                                                 X     X  X        X                X
                                                 X     X  X        X     X          X
                                                 X     X  XXXXXXX   XXXXX          XXX




            THIS PROGRAM REPLACES ALL PREVIOUS VERSIONS OF HEC-1 KNOWN AS HEC1 (JAN 73), HEC1GS, HEC1DB, AND HEC1KW.

            THE DEFINITIONS OF VARIABLES -RTIMP- AND -RTIOR- HAVE CHANGED FROM THOSE USED WITH THE 1973-STYLE INPUT STRUCTURE.
            THE DEFINITION OF -AMSKK- ON RM-CARD WAS CHANGED WITH REVISIONS DATED 28 SEP 81. THIS IS THE FORTRAN77 VERSION
            NEW OPTIONS: DAMBREAK OUTFLOW SUBMERGENCE , SINGLE EVENT DAMAGE CALCULATION, DSS:WRITE STAGE FREQUENCY,
            DSS:READ TIME SERIES AT DESIRED CALCULATION INTERVAL   LOSS RATE:GREEN AND AMPT INFILTRATION
            KINEMATIC WAVE: NEW FINITE DIFFERENCE ALGORITHM


1                                                      HEC-1 INPUT                                                    PAGE  1

           LINE           ID.......1.......2.......3.......4.......5.......6.......7.......8.......9......10

 *** FREE ***
                          *DIAGRAM
              1           ID   SOUTH OTAY VTM; J-15013-C
              2           ID   DETENTION ANALYSIS FOR BASIN 3
              3           ID   FEBURARY 16, 2022 - FILE NAME: SWV3HD00.hc1
              4           IT       1 01JAN90    1200     300
              5           IO       5       0
                          *

              6           KKSWV385_100YR.hc1
              7           KM   RUN DATE   2/16/2022
              8           KM   RATIONAL METHOD HYDROGRAPH PROGRAM
              9           KM   COPYRIGHT 1992, 2014, RICK ENGINEERING COMPANY
             10           KM   6HR RAINFALL IS 2 INCHES
             11           KM   RATIONAL METHOD RUNOFF COEFFICIENT IS 0.8
             12           KM   RATIONAL METHOD TIME OF CONCENTRATION IS 10 MIN.
             13           KM   FOR THIS DATA TO RUN PROPERLY THIS IT CARD MUST BE ADDED TO YOUR HEC-1
             14           KM   IT 2 01JAN90 1200 200
             15           BA  0.0113
             16           IN      10 01JAN90    1155
             17           QI       0     0.7     0.7     0.7     0.7     0.8     0.8     0.8     0.9     0.9
             18           QI     0.9       1       1     1.1     1.1     1.2     1.3     1.4     1.5     1.7
             19           QI     1.9     2.3     2.6     3.8       5    19.8     3.1     2.1     1.6     1.4
             20           QI     1.2       1       1     0.9     0.8     0.8     0.7       0       0       0
             21           QI       0       0       0       0       0       0       0       0
                          *

             22           KKSWV367_100YR.hc1
             23           KM   RUN DATE   2/16/2022
             24           KM   RATIONAL METHOD HYDROGRAPH PROGRAM
             25           KM   COPYRIGHT 1992, 2014, RICK ENGINEERING COMPANY
             26           KM   6HR RAINFALL IS 2 INCHES
             27           KM   RATIONAL METHOD RUNOFF COEFFICIENT IS 0.8
             28           KM   RATIONAL METHOD TIME OF CONCENTRATION IS 12 MIN.
             29           KM   FOR THIS DATA TO RUN PROPERLY THIS IT CARD MUST BE ADDED TO YOUR HEC-1
             30           KM   IT 2 01JAN90 1200 200
             31           BA  0.0464
             32           IN      12 01JAN90    1154
             33           QI       0     2.8     2.9     3.1     3.1     3.3     3.4     3.6     3.7       4
             34           QI     4.1     4.5     4.7     5.2     5.5     6.4     6.9     8.4     9.6    14.1
             35           QI    11.6    79.4    11.3     7.6     5.9       5     4.3     3.8     3.5     3.2
             36           QI       3       0       0       0       0       0       0       0       0       0
             37           QI       0       0
                          *

             38           KK   VAULT300 COMBINED
```

```
            39           KO       2       2       0       0       0
            40           KM   COMBINE INFLOW HYDROGRAPHS TO VAULT 300
            41           HC       2
                         *
1                                                           HEC-1 INPUT                                             PAGE  2

          LINE           ID.......1.......2.......3.......4.......5.......6.......7.......8.......9......10


            42           KK   VAULT300
            43           KO       2       2       0       0      21
            44           KM   VAULT 300
            45           RS       1    ELEV       5
            46           SV       0   0.202   0.526    0.85   1.173   1.497   1.659   1.821   1.983   2.144
            47           SV   2.306   2.468    2.63   2.792   2.954   3.116   3.277   3.439   3.601   3.763
            48           SQ   0.478   0.701   0.869   1.009   1.132   1.243    2.09   3.594   5.526   7.803
            49           SQ   8.621   9.346  12.136  16.639   22.25  25.404  33.906  47.504  64.397  83.955
            50           SE       0       1       2       3       4       5     5.5       6     6.5       7
            51           SE     7.5       8     8.5       9     9.5      10    10.5      11    11.5      12
                         *
            52           ZZ
1
                    SCHEMATIC DIAGRAM OF STREAM NETWORK
 INPUT
  LINE      (V) ROUTING          (--->) DIVERSION OR PUMP FLOW

   NO.      (.) CONNECTOR        (<---) RETURN OF DIVERTED OR PUMPED FLOW

     6    SWV385_1
                 .
                 .
    22           .    SWV367_1
                 .           .
                 .           .
    38       VAULT............
                 V
                 V
    42       VAULT

 (***) RUNOFF ALSO COMPUTED AT THIS LOCATION
1*****************************************                                                    ***************************************
 *                                       *                                                    *                                     *
 *   FLOOD HYDROGRAPH PACKAGE  (HEC-1)   *                                                    *    U.S. ARMY CORPS OF ENGINEERS     *
 *             JUN   1998                *                                                    *    HYDROLOGIC ENGINEERING CENTER    *
 *          VERSION 4.1                  *                                                    *         609 SECOND STREET           *
 *                                       *                                                    *      DAVIS, CALIFORNIA 95616        *
 *  RUN DATE   17FEB22  TIME  14:36:17   *                                                    *          (916) 756-1104             *
 *                                       *                                                    *                                     *
 *****************************************                                                    ***************************************




                           SOUTH OTAY VTM; J-15013-C
                           DETENTION ANALYSIS FOR BASIN 3
                           FEBURARY 16, 2022 - FILE NAME: SWV3HD00.hc1

    5 IO          OUTPUT CONTROL VARIABLES
                        IPRNT           5  PRINT CONTROL
                        IPLOT           0  PLOT CONTROL
                        QSCAL          0.  HYDROGRAPH PLOT SCALE

      IT          HYDROGRAPH TIME DATA
                         NMIN           1  MINUTES IN COMPUTATION INTERVAL
                        IDATE      1JAN90  STARTING DATE
                        ITIME        1200  STARTING TIME
                           NQ         300  NUMBER OF HYDROGRAPH ORDINATES
                       NDDATE      1JAN90  ENDING DATE
                       NDTIME        1659  ENDING TIME
                       ICENT           19  CENTURY MARK

                    COMPUTATION INTERVAL     .02 HOURS
                         TOTAL TIME BASE    4.98 HOURS

          ENGLISH UNITS
               DRAINAGE AREA         SQUARE MILES
               PRECIPITATION DEPTH   INCHES
               LENGTH, ELEVATION     FEET
               FLOW                  CUBIC FEET PER SECOND
               STORAGE VOLUME        ACRE-FEET
               SURFACE AREA          ACRES
               TEMPERATURE           DEGREES FAHRENHEIT
```

```
*** *** *** *** *** *** *** *** *** *** *** *** *** *** *** *** *** *** *** *** *** *** *** *** *** *** *** *** *** *** *** *** ***


            **************
            *            *
  38 KK     *     VAULT  *     300 COMBINED
            *            *
            **************

  39 KO          OUTPUT CONTROL VARIABLES
                       IPRNT           2  PRINT CONTROL
                       IPLOT           2  PLOT CONTROL
                       QSCAL          0.  HYDROGRAPH PLOT SCALE
                           COMBINE INFLOW HYDROGRAPHS TO VAULT 300

  41 HC          HYDROGRAPH COMBINATION
                       ICOMP           2  NUMBER OF HYDROGRAPHS TO COMBINE

                                                                 ***

************************************************************************************************************************************

                                                  HYDROGRAPH AT STATION    VAULT
                                                       SUM OF  2 HYDROGRAPHS

************************************************************************************************************************************
                                *                                *                                *
   DA MON HRMN  ORD      FLOW   *   DA MON HRMN  ORD      FLOW   *   DA MON HRMN  ORD      FLOW   *   DA MON HRMN  ORD      FLOW
                                *                                *                                *
    1 JAN 1200    1        2.   *    1 JAN 1315   76        4.   *    1 JAN 1430  151        6.   *    1 JAN 1545  226       17.
    1 JAN 1201    2        2.   *    1 JAN 1316   77        4.   *    1 JAN 1431  152        6.   *    1 JAN 1546  227       17.
    1 JAN 1202    3        2.   *    1 JAN 1317   78        4.   *    1 JAN 1432  153        7.   *    1 JAN 1547  228       17.
    1 JAN 1203    4        3.   *    1 JAN 1318   79        5.   *    1 JAN 1433  154        7.   *    1 JAN 1548  229       17.
    1 JAN 1204    5        3.   *    1 JAN 1319   80        5.   *    1 JAN 1434  155        7.   *    1 JAN 1549  230       17.
    1 JAN 1205    6        3.   *    1 JAN 1320   81        5.   *    1 JAN 1435  156        7.   *    1 JAN 1550  231       17.
    1 JAN 1206    7        4.   *    1 JAN 1321   82        5.   *    1 JAN 1436  157        7.   *    1 JAN 1551  232       17.
    1 JAN 1207    8        4.   *    1 JAN 1322   83        5.   *    1 JAN 1437  158        7.   *    1 JAN 1552  233       17.
    1 JAN 1208    9        4.   *    1 JAN 1323   84        5.   *    1 JAN 1438  159        7.   *    1 JAN 1553  234       17.
    1 JAN 1209   10        4.   *    1 JAN 1324   85        5.   *    1 JAN 1439  160        7.   *    1 JAN 1554  235       16.
    1 JAN 1210   11        4.   *    1 JAN 1325   86        5.   *    1 JAN 1440  161        7.   *    1 JAN 1555  236       22.
    1 JAN 1211   12        4.   *    1 JAN 1326   87        5.   *    1 JAN 1441  162        7.   *    1 JAN 1556  237       29.
    1 JAN 1212   13        4.   *    1 JAN 1327   88        5.   *    1 JAN 1442  163        7.   *    1 JAN 1557  238       37.
    1 JAN 1213   14        4.   *    1 JAN 1328   89        5.   *    1 JAN 1443  164        7.   *    1 JAN 1558  239       44.
    1 JAN 1214   15        4.   *    1 JAN 1329   90        5.   *    1 JAN 1444  165        7.   *    1 JAN 1559  240       51.
    1 JAN 1215   16        4.   *    1 JAN 1330   91        5.   *    1 JAN 1445  166        7.   *    1 JAN 1600  241       58.
    1 JAN 1216   17        4.   *    1 JAN 1331   92        5.   *    1 JAN 1446  167        7.   *    1 JAN 1601  242       65.
    1 JAN 1217   18        4.   *    1 JAN 1332   93        5.   *    1 JAN 1447  168        7.   *    1 JAN 1602  243       72.
    1 JAN 1218   19        4.   *    1 JAN 1333   94        5.   *    1 JAN 1448  169        7.   *    1 JAN 1603  244       79.
    1 JAN 1219   20        4.   *    1 JAN 1334   95        5.   *    1 JAN 1449  170        7.   *    1 JAN 1604  245       86.
    1 JAN 1220   21        4.   *    1 JAN 1335   96        5.   *    1 JAN 1450  171        8.   *    1 JAN 1605  246       94.
    1 JAN 1221   22        4.   *    1 JAN 1336   97        5.   *    1 JAN 1451  172        8.   *    1 JAN 1606  247       98.
    1 JAN 1222   23        4.   *    1 JAN 1337   98        5.   *    1 JAN 1452  173        8.   *    1 JAN 1607  248       90.
    1 JAN 1223   24        4.   *    1 JAN 1338   99        5.   *    1 JAN 1453  174        8.   *    1 JAN 1608  249       83.
    1 JAN 1224   25        4.   *    1 JAN 1339  100        5.   *    1 JAN 1454  175        8.   *    1 JAN 1609  250       75.
    1 JAN 1225   26        4.   *    1 JAN 1340  101        5.   *    1 JAN 1455  176        8.   *    1 JAN 1610  251       68.
    1 JAN 1226   27        4.   *    1 JAN 1341  102        5.   *    1 JAN 1456  177        8.   *    1 JAN 1611  252       61.
    1 JAN 1227   28        4.   *    1 JAN 1342  103        5.   *    1 JAN 1457  178        8.   *    1 JAN 1612  253       53.
    1 JAN 1228   29        4.   *    1 JAN 1343  104        5.   *    1 JAN 1458  179        8.   *    1 JAN 1613  254       46.
    1 JAN 1229   30        4.   *    1 JAN 1344  105        5.   *    1 JAN 1459  180        8.   *    1 JAN 1614  255       39.
    1 JAN 1230   31        4.   *    1 JAN 1345  106        5.   *    1 JAN 1500  181        8.   *    1 JAN 1615  256       31.
    1 JAN 1231   32        4.   *    1 JAN 1346  107        5.   *    1 JAN 1501  182        8.   *    1 JAN 1616  257       26.
    1 JAN 1232   33        4.   *    1 JAN 1347  108        5.   *    1 JAN 1502  183        8.   *    1 JAN 1617  258       20.
    1 JAN 1233   34        4.   *    1 JAN 1348  109        5.   *    1 JAN 1503  184        8.   *    1 JAN 1618  259       14.
    1 JAN 1234   35        4.   *    1 JAN 1349  110        5.   *    1 JAN 1504  185        8.   *    1 JAN 1619  260       14.
    1 JAN 1235   36        4.   *    1 JAN 1350  111        5.   *    1 JAN 1505  186        9.   *    1 JAN 1620  261       13.
    1 JAN 1236   37        4.   *    1 JAN 1351  112        5.   *    1 JAN 1506  187        9.   *    1 JAN 1621  262       13.
    1 JAN 1237   38        4.   *    1 JAN 1352  113        5.   *    1 JAN 1507  188        9.   *    1 JAN 1622  263       12.
    1 JAN 1238   39        4.   *    1 JAN 1353  114        5.   *    1 JAN 1508  189        9.   *    1 JAN 1623  264       12.
    1 JAN 1239   40        4.   *    1 JAN 1354  115        5.   *    1 JAN 1509  190        9.   *    1 JAN 1624  265       12.
    1 JAN 1240   41        4.   *    1 JAN 1355  116        5.   *    1 JAN 1510  191        9.   *    1 JAN 1625  266       11.
    1 JAN 1241   42        4.   *    1 JAN 1356  117        5.   *    1 JAN 1511  192        9.   *    1 JAN 1626  267       11.
    1 JAN 1242   43        4.   *    1 JAN 1357  118        5.   *    1 JAN 1512  193        9.   *    1 JAN 1627  268       11.
    1 JAN 1243   44        4.   *    1 JAN 1358  119        5.   *    1 JAN 1513  194       10.   *    1 JAN 1628  269       10.
    1 JAN 1244   45        4.   *    1 JAN 1359  120        5.   *    1 JAN 1514  195       10.   *    1 JAN 1629  270       10.
    1 JAN 1245   46        4.   *    1 JAN 1400  121        5.   *    1 JAN 1515  196       10.   *    1 JAN 1630  271        9.
    1 JAN 1246   47        4.   *    1 JAN 1401  122        5.   *    1 JAN 1516  197       10.   *    1 JAN 1631  272        9.
    1 JAN 1247   48        4.   *    1 JAN 1402  123        5.   *    1 JAN 1517  198       10.   *    1 JAN 1632  273        9.
    1 JAN 1248   49        4.   *    1 JAN 1403  124        5.   *    1 JAN 1518  199       10.   *    1 JAN 1633  274        9.
    1 JAN 1249   50        4.   *    1 JAN 1404  125        6.   *    1 JAN 1519  200       11.   *    1 JAN 1634  275        9.
    1 JAN 1250   51        4.   *    1 JAN 1405  126        6.   *    1 JAN 1520  201       11.   *    1 JAN 1635  276        8.
    1 JAN 1251   52        4.   *    1 JAN 1406  127        6.   *    1 JAN 1521  202       11.   *    1 JAN 1636  277        8.
    1 JAN 1252   53        4.   *    1 JAN 1407  128        6.   *    1 JAN 1522  203       11.   *    1 JAN 1637  278        8.
```

```
         1 JAN 1253   54        4.   *    1 JAN 1408  129        6.   *    1 JAN 1523  204       11.   *    1 JAN 1638  279        8.
         1 JAN 1254   55        4.   *    1 JAN 1409  130        6.   *    1 JAN 1524  205       11.   *    1 JAN 1639  280        8.
         1 JAN 1255   56        4.   *    1 JAN 1410  131        6.   *    1 JAN 1525  206       11.   *    1 JAN 1640  281        8.
         1 JAN 1256   57        4.   *    1 JAN 1411  132        6.   *    1 JAN 1526  207       12.   *    1 JAN 1641  282        8.
         1 JAN 1257   58        4.   *    1 JAN 1412  133        6.   *    1 JAN 1527  208       12.   *    1 JAN 1642  283        7.
         1 JAN 1258   59        4.   *    1 JAN 1413  134        6.   *    1 JAN 1528  209       12.   *    1 JAN 1643  284        7.
         1 JAN 1259   60        4.   *    1 JAN 1414  135        6.   *    1 JAN 1529  210       12.   *    1 JAN 1644  285        7.
         1 JAN 1300   61        4.   *    1 JAN 1415  136        6.   *    1 JAN 1530  211       12.   *    1 JAN 1645  286        7.
         1 JAN 1301   62        4.   *    1 JAN 1416  137        6.   *    1 JAN 1531  212       12.   *    1 JAN 1646  287        7.
         1 JAN 1302   63        4.   *    1 JAN 1417  138        6.   *    1 JAN 1532  213       13.   *    1 JAN 1647  288        7.
         1 JAN 1303   64        4.   *    1 JAN 1418  139        6.   *    1 JAN 1533  214       13.   *    1 JAN 1648  289        7.
         1 JAN 1304   65        4.   *    1 JAN 1419  140        6.   *    1 JAN 1534  215       14.   *    1 JAN 1649  290        7.
         1 JAN 1305   66        4.   *    1 JAN 1420  141        6.   *    1 JAN 1535  216       14.   *    1 JAN 1650  291        7.
         1 JAN 1306   67        4.   *    1 JAN 1421  142        6.   *    1 JAN 1536  217       15.   *    1 JAN 1651  292        7.
         1 JAN 1307   68        4.   *    1 JAN 1422  143        6.   *    1 JAN 1537  218       15.   *    1 JAN 1652  293        6.
         1 JAN 1308   69        4.   *    1 JAN 1423  144        6.   *    1 JAN 1538  219       16.   *    1 JAN 1653  294        6.
         1 JAN 1309   70        4.   *    1 JAN 1424  145        6.   *    1 JAN 1539  220       16.   *    1 JAN 1654  295        6.
         1 JAN 1310   71        4.   *    1 JAN 1425  146        6.   *    1 JAN 1540  221       17.   *    1 JAN 1655  296        6.
         1 JAN 1311   72        4.   *    1 JAN 1426  147        6.   *    1 JAN 1541  222       17.   *    1 JAN 1656  297        6.
         1 JAN 1312   73        4.   *    1 JAN 1427  148        6.   *    1 JAN 1542  223       18.   *    1 JAN 1657  298        6.
         1 JAN 1313   74        4.   *    1 JAN 1428  149        6.   *    1 JAN 1543  224       17.   *    1 JAN 1658  299        6.
         1 JAN 1314   75        4.   *    1 JAN 1429  150        6.   *    1 JAN 1544  225       17.   *    1 JAN 1659  300        6.
                                     *                                *                                *
     ***********************************************************************************************************************************

      PEAK FLOW     TIME                             MAXIMUM AVERAGE FLOW
                                          6-HR       24-HR       72-HR      4.98-HR
    +   (CFS)       (HR)
                               (CFS)
    +      98.      4.10                   11.         11.         11.          11.
                            (INCHES)     1.463       1.463       1.463        1.463
                             (AC-FT)        5.          5.          5.           5.

                             CUMULATIVE AREA =     .06 SQ MI

    1                                                          STATION    VAULT

                              (O) OUTFLOW
              0.       10.       20.       30.       40.       50.       60.       70.       80.       90.      100.        0.        0.
     DAHRMN PER
      11200   1.-O-------.---------.---------.---------.---------.---------.---------.---------.---------.---------.---------.---------.
      11201   2. O       .         .         .         .         .         .         .         .         .         .         .         .
      11202   3. O       .         .         .         .         .         .         .         .         .         .         .         .
      11203   4.  O      .         .         .         .         .         .         .         .         .         .         .         .
      11204   5.  O      .         .         .         .         .         .         .         .         .         .         .         .
      11205   6.  O      .         .         .         .         .         .         .         .         .         .         .         .
      11206   7.   O     .         .         .         .         .         .         .         .         .         .         .         .
      11207   8.   O     .         .         .         .         .         .         .         .         .         .         .         .
      11208   9.   O     .         .         .         .         .         .         .         .         .         .         .         .
      11209  10.   O     .         .         .         .         .         .         .         .         .         .         .         .
      11210  11. . O . . . . . . . . . . . . . . . . . . . . . . . . . . . . . . . . . . . . . . . . . . . . . . . . . . . . . . . . . .
      11211  12.   O     .         .         .         .         .         .         .         .         .         .         .         .
      11212  13.   O     .         .         .         .         .         .         .         .         .         .         .         .
      11213  14.   O     .         .         .         .         .         .         .         .         .         .         .         .
      11214  15.   O     .         .         .         .         .         .         .         .         .         .         .         .
      11215  16.   O     .         .         .         .         .         .         .         .         .         .         .         .
      11216  17.   O     .         .         .         .         .         .         .         .         .         .         .         .
      11217  18.   O     .         .         .         .         .         .         .         .         .         .         .         .
      11218  19.   O     .         .         .         .         .         .         .         .         .         .         .         .
      11219  20.   O     .         .         .         .         .         .         .         .         .         .         .         .
      11220  21. . O . . . . . . . . . . . . . . . . . . . . . . . . . . . . . . . . . . . . . . . . . . . . . . . . . . . . . . . . . .
      11221  22.   O     .         .         .         .         .         .         .         .         .         .         .         .
      11222  23.   O     .         .         .         .         .         .         .         .         .         .         .         .
      11223  24.   O     .         .         .         .         .         .         .         .         .         .         .         .
      11224  25.   O     .         .         .         .         .         .         .         .         .         .         .         .
      11225  26.   O     .         .         .         .         .         .         .         .         .         .         .         .
      11226  27.   O     .         .         .         .         .         .         .         .         .         .         .         .
      11227  28.   O     .         .         .         .         .         .         .         .         .         .         .         .
      11228  29.   O     .         .         .         .         .         .         .         .         .         .         .         .
      11229  30.   O     .         .         .         .         .         .         .         .         .         .         .         .
      11230  31. . O . . . . . . . . . . . . . . . . . . . . . . . . . . . . . . . . . . . . . . . . . . . . . . . . . . . . . . . . . .
      11231  32.   O     .         .         .         .         .         .         .         .         .         .         .         .
      11232  33.   O     .         .         .         .         .         .         .         .         .         .         .         .
      11233  34.   O     .         .         .         .         .         .         .         .         .         .         .         .
      11234  35.   O     .         .         .         .         .         .         .         .         .         .         .         .
      11235  36.   O     .         .         .         .         .         .         .         .         .         .         .         .
      11236  37.   O     .         .         .         .         .         .         .         .         .         .         .         .
      11237  38.   O     .         .         .         .         .         .         .         .         .         .         .         .
      11238  39.   O     .         .         .         .         .         .         .         .         .         .         .         .
      11239  40.   O     .         .         .         .         .         .         .         .         .         .         .         .
      11240  41. . O . . . . . . . . . . . . . . . . . . . . . . . . . . . . . . . . . . . . . . . . . . . . . . . . . . . . . . . . . .
      11241  42.   O     .         .         .         .         .         .         .         .         .         .         .         .
      11242  43.   O     .         .         .         .         .         .         .         .         .         .         .         .
      11243  44.   O     .         .         .         .         .         .         .         .         .         .         .         .
```

```
11244  45.   O     .         .         .         .         .         .         .         .         .         .         .         .
11245  46.   O     .         .         .         .         .         .         .         .         .         .         .         .
11246  47.   O     .         .         .         .         .         .         .         .         .         .         .         .
11247  48.   O     .         .         .         .         .         .         .         .         .         .         .         .
11248  49.   O     .         .         .         .         .         .         .         .         .         .         .         .
11249  50.   O     .         .         .         .         .         .         .         .         .         .         .         .
11250  51. . O . . . . . . . . . . . . . . . . . . . . . . . . . . . . . . . . . . . . . . . . . . . . . . . . . . . . . . . . . . .
11251  52.   O     .         .         .         .         .         .         .         .         .         .         .         .
11252  53.   O     .         .         .         .         .         .         .         .         .         .         .         .
11253  54.   O     .         .         .         .         .         .         .         .         .         .         .         .
11254  55.   O     .         .         .         .         .         .         .         .         .         .         .         .
11255  56.   O     .         .         .         .         .         .         .         .         .         .         .         .
11256  57.   O     .         .         .         .         .         .         .         .         .         .         .         .
11257  58.   O     .         .         .         .         .         .         .         .         .         .         .         .
11258  59.   O     .         .         .         .         .         .         .         .         .         .         .         .
11259  60.   O     .         .         .         .         .         .         .         .         .         .         .         .
11300  61. . O . . . . . . . . . . . . . . . . . . . . . . . . . . . . . . . . . . . . . . . . . . . . . . . . . . . . . . . . . . .
11301  62.   O     .         .         .         .         .         .         .         .         .         .         .         .
11302  63.   O     .         .         .         .         .         .         .         .         .         .         .         .
11303  64.   O     .         .         .         .         .         .         .         .         .         .         .         .
11304  65.   O     .         .         .         .         .         .         .         .         .         .         .         .
11305  66.   O     .         .         .         .         .         .         .         .         .         .         .         .
11306  67.   O     .         .         .         .         .         .         .         .         .         .         .         .
11307  68.   O     .         .         .         .         .         .         .         .         .         .         .         .
11308  69.   O     .         .         .         .         .         .         .         .         .         .         .         .
11309  70.   O     .         .         .         .         .         .         .         .         .         .         .         .
11310  71. . O . . . . . . . . . . . . . . . . . . . . . . . . . . . . . . . . . . . . . . . . . . . . . . . . . . . . . . . . . . .
11311  72.   O     .         .         .         .         .         .         .         .         .         .         .         .
11312  73.   O     .         .         .         .         .         .         .         .         .         .         .         .
11313  74.   O     .         .         .         .         .         .         .         .         .         .         .         .
11314  75.   O     .         .         .         .         .         .         .         .         .         .         .         .
11315  76.   O     .         .         .         .         .         .         .         .         .         .         .         .
11316  77.   O     .         .         .         .         .         .         .         .         .         .         .         .
11317  78.   O     .         .         .         .         .         .         .         .         .         .         .         .
11318  79.    O    .         .         .         .         .         .         .         .         .         .         .         .
11319  80.    O    .         .         .         .         .         .         .         .         .         .         .         .
11320  81. . .O. . . . . . . . . . . . . . . . . . . . . . . . . . . . . . . . . . . . . . . . . . . . . . . . . . . . . . . . . . .
11321  82.    O    .         .         .         .         .         .         .         .         .         .         .         .
11322  83.    O    .         .         .         .         .         .         .         .         .         .         .         .
11323  84.    O    .         .         .         .         .         .         .         .         .         .         .         .
11324  85.    O    .         .         .         .         .         .         .         .         .         .         .         .
11325  86.    O    .         .         .         .         .         .         .         .         .         .         .         .
11326  87.    O    .         .         .         .         .         .         .         .         .         .         .         .
11327  88.    O    .         .         .         .         .         .         .         .         .         .         .         .
11328  89.    O    .         .         .         .         .         .         .         .         .         .         .         .
11329  90.    O    .         .         .         .         .         .         .         .         .         .         .         .
11330  91. . .O. . . . . . . . . . . . . . . . . . . . . . . . . . . . . . . . . . . . . . . . . . . . . . . . . . . . . . . . . . .
11331  92.    O    .         .         .         .         .         .         .         .         .         .         .         .
11332  93.    O    .         .         .         .         .         .         .         .         .         .         .         .
11333  94.    O    .         .         .         .         .         .         .         .         .         .         .         .
11334  95.    O    .         .         .         .         .         .         .         .         .         .         .         .
11335  96.    O    .         .         .         .         .         .         .         .         .         .         .         .
11336  97.    O    .         .         .         .         .         .         .         .         .         .         .         .
11337  98.    O    .         .         .         .         .         .         .         .         .         .         .         .
11338  99.    O    .         .         .         .         .         .         .         .         .         .         .         .
11339 100.    O    .         .         .         .         .         .         .         .         .         .         .         .
11340 101. . .O. . . . . . . . . . . . . . . . . . . . . . . . . . . . . . . . . . . . . . . . . . . . . . . . . . . . . . . . . . .
11341 102.    O    .         .         .         .         .         .         .         .         .         .         .         .
11342 103.    O    .         .         .         .         .         .         .         .         .         .         .         .
11343 104.    O    .         .         .         .         .         .         .         .         .         .         .         .
11344 105.    O    .         .         .         .         .         .         .         .         .         .         .         .
11345 106.    O    .         .         .         .         .         .         .         .         .         .         .         .
11346 107.    O    .         .         .         .         .         .         .         .         .         .         .         .
11347 108.    O    .         .         .         .         .         .         .         .         .         .         .         .
11348 109.    O    .         .         .         .         .         .         .         .         .         .         .         .
11349 110.    O    .         .         .         .         .         .         .         .         .         .         .         .
11350 111. . .O. . . . . . . . . . . . . . . . . . . . . . . . . . . . . . . . . . . . . . . . . . . . . . . . . . . . . . . . . . .
11351 112.    O    .         .         .         .         .         .         .         .         .         .         .         .
11352 113.    O    .         .         .         .         .         .         .         .         .         .         .         .
11353 114.    O    .         .         .         .         .         .         .         .         .         .         .         .
11354 115.    O    .         .         .         .         .         .         .         .         .         .         .         .
11355 116.    O    .         .         .         .         .         .         .         .         .         .         .         .
11356 117.    O    .         .         .         .         .         .         .         .         .         .         .         .
11357 118.    O    .         .         .         .         .         .         .         .         .         .         .         .
11358 119.    O    .         .         .         .         .         .         .         .         .         .         .         .
11359 120.    O    .         .         .         .         .         .         .         .         .         .         .         .
11400 121. . .O. . . . . . . . . . . . . . . . . . . . . . . . . . . . . . . . . . . . . . . . . . . . . . . . . . . . . . . . . . .
11401 122.    O    .         .         .         .         .         .         .         .         .         .         .         .
11402 123.    O    .         .         .         .         .         .         .         .         .         .         .         .
11403 124.    O    .         .         .         .         .         .         .         .         .         .         .         .
11404 125.     O   .         .         .         .         .         .         .         .         .         .         .         .
11405 126.     O   .         .         .         .         .         .         .         .         .         .         .         .
11406 127.     O   .         .         .         .         .         .         .         .         .         .         .         .
11407 128.     O   .         .         .         .         .         .         .         .         .         .         .         .
```

```
11408 129.     O   .         .         .         .         .         .         .         .         .         .         .         .
11409 130.     O   .         .         .         .         .         .         .         .         .         .         .         .
11410 131. . . O . . . . . . . . . . . . . . . . . . . . . . . . . . . . . . . . . . . . . . . . . . . . . . . . . . . . . . . .
11411 132.     O   .         .         .         .         .         .         .         .         .         .         .         .
11412 133.     O   .         .         .         .         .         .         .         .         .         .         .         .
11413 134.     O   .         .         .         .         .         .         .         .         .         .         .         .
11414 135.     O   .         .         .         .         .         .         .         .         .         .         .         .
11415 136.     O   .         .         .         .         .         .         .         .         .         .         .         .
11416 137.     O   .         .         .         .         .         .         .         .         .         .         .         .
11417 138.     O   .         .         .         .         .         .         .         .         .         .         .         .
11418 139.     O   .         .         .         .         .         .         .         .         .         .         .         .
11419 140.     O   .         .         .         .         .         .         .         .         .         .         .         .
11420 141. . . O . . . . . . . . . . . . . . . . . . . . . . . . . . . . . . . . . . . . . . . . . . . . . . . . . . . . . . . .
11421 142.     O   .         .         .         .         .         .         .         .         .         .         .         .
11422 143.     O   .         .         .         .         .         .         .         .         .         .         .         .
11423 144.     O   .         .         .         .         .         .         .         .         .         .         .         .
11424 145.     O   .         .         .         .         .         .         .         .         .         .         .         .
11425 146.     O   .         .         .         .         .         .         .         .         .         .         .         .
11426 147.     O   .         .         .         .         .         .         .         .         .         .         .         .
11427 148.     O   .         .         .         .         .         .         .         .         .         .         .         .
11428 149.     O   .         .         .         .         .         .         .         .         .         .         .         .
11429 150.     O   .         .         .         .         .         .         .         .         .         .         .         .
11430 151. . . O . . . . . . . . . . . . . . . . . . . . . . . . . . . . . . . . . . . . . . . . . . . . . . . . . . . . . . . .
11431 152.     O   .         .         .         .         .         .         .         .         .         .         .         .
11432 153.      O  .         .         .         .         .         .         .         .         .         .         .         .
11433 154.      O  .         .         .         .         .         .         .         .         .         .         .         .
11434 155.      O  .         .         .         .         .         .         .         .         .         .         .         .
11435 156.      O  .         .         .         .         .         .         .         .         .         .         .         .
11436 157.      O  .         .         .         .         .         .         .         .         .         .         .         .
11437 158.      O  .         .         .         .         .         .         .         .         .         .         .         .
11438 159.      O  .         .         .         .         .         .         .         .         .         .         .         .
11439 160.      O  .         .         .         .         .         .         .         .         .         .         .         .
11440 161. . . .O. . . . . . . . . . . . . . . . . . . . . . . . . . . . . . . . . . . . . . . . . . . . . . . . . . . . . . . .
11441 162.      O  .         .         .         .         .         .         .         .         .         .         .         .
11442 163.      O  .         .         .         .         .         .         .         .         .         .         .         .
11443 164.      O  .         .         .         .         .         .         .         .         .         .         .         .
11444 165.      O  .         .         .         .         .         .         .         .         .         .         .         .
11445 166.      O  .         .         .         .         .         .         .         .         .         .         .         .
11446 167.      O  .         .         .         .         .         .         .         .         .         .         .         .
11447 168.      O  .         .         .         .         .         .         .         .         .         .         .         .
11448 169.      O  .         .         .         .         .         .         .         .         .         .         .         .
11449 170.      O  .         .         .         .         .         .         .         .         .         .         .         .
11450 171. . . . O . . . . . . . . . . . . . . . . . . . . . . . . . . . . . . . . . . . . . . . . . . . . . . . . . . . . . . .
11451 172.       O .         .         .         .         .         .         .         .         .         .         .         .
11452 173.       O .         .         .         .         .         .         .         .         .         .         .         .
11453 174.       O .         .         .         .         .         .         .         .         .         .         .         .
11454 175.       O .         .         .         .         .         .         .         .         .         .         .         .
11455 176.       O .         .         .         .         .         .         .         .         .         .         .         .
11456 177.       O .         .         .         .         .         .         .         .         .         .         .         .
11457 178.       O .         .         .         .         .         .         .         .         .         .         .         .
11458 179.       O .         .         .         .         .         .         .         .         .         .         .         .
11459 180.       O .         .         .         .         .         .         .         .         .         .         .         .
11500 181. . . . O . . . . . . . . . . . . . . . . . . . . . . . . . . . . . . . . . . . . . . . . . . . . . . . . . . . . . . .
11501 182.       O .         .         .         .         .         .         .         .         .         .         .         .
11502 183.       O .         .         .         .         .         .         .         .         .         .         .         .
11503 184.       O .         .         .         .         .         .         .         .         .         .         .         .
11504 185.       O .         .         .         .         .         .         .         .         .         .         .         .
11505 186.        O.         .         .         .         .         .         .         .         .         .         .         .
11506 187.        O.         .         .         .         .         .         .         .         .         .         .         .
11507 188.        O.         .         .         .         .         .         .         .         .         .         .         .
11508 189.        O.         .         .         .         .         .         .         .         .         .         .         .
11509 190.        O.         .         .         .         .         .         .         .         .         .         .         .
11510 191. . . . .O. . . . . . . . . . . . . . . . . . . . . . . . . . . . . . . . . . . . . . . . . . . . . . . . . . . . . .
11511 192.        O.         .         .         .         .         .         .         .         .         .         .         .
11512 193.        O.         .         .         .         .         .         .         .         .         .         .         .
11513 194.         O         .         .         .         .         .         .         .         .         .         .         .
11514 195.         O         .         .         .         .         .         .         .         .         .         .         .
11515 196.         O         .         .         .         .         .         .         .         .         .         .         .
11516 197.         O         .         .         .         .         .         .         .         .         .         .         .
11517 198.         O         .         .         .         .         .         .         .         .         .         .         .
11518 199.         O         .         .         .         .         .         .         .         .         .         .         .
11519 200.         .O        .         .         .         .         .         .         .         .         .         .         .
11520 201. . . . . .O. . . . . . . . . . . . . . . . . . . . . . . . . . . . . . . . . . . . . . . . . . . . . . . . . . . . . .
11521 202.         .O        .         .         .         .         .         .         .         .         .         .         .
11522 203.         .O        .         .         .         .         .         .         .         .         .         .         .
11523 204.         .O        .         .         .         .         .         .         .         .         .         .         .
11524 205.         .O        .         .         .         .         .         .         .         .         .         .         .
11525 206.         .O        .         .         .         .         .         .         .         .         .         .         .
11526 207.         . O       .         .         .         .         .         .         .         .         .         .         .
11527 208.         . O       .         .         .         .         .         .         .         .         .         .         .
11528 209.         . O       .         .         .         .         .         .         .         .         .         .         .
11529 210.         . O       .         .         .         .         .         .         .         .         .         .         .
11530 211. . . . . . O . . . . . . . . . . . . . . . . . . . . . . . . . . . . . . . . . . . . . . . . . . . . . . . . . . . . .
11531 212.         . O       .         .         .         .         .         .         .         .         .         .         .
```

```
11532 213.         .  O      .         .         .         .         .         .         .         .         .         .         .
11533 214.         .  O      .         .         .         .         .         .         .         .         .         .         .
11534 215.         .   O     .         .         .         .         .         .         .         .         .         .         .
11535 216.         .   O     .         .         .         .         .         .         .         .         .         .         .
11536 217.         .    O    .         .         .         .         .         .         .         .         .         .         .
11537 218.         .    O    .         .         .         .         .         .         .         .         .         .         .
11538 219.         .     O   .         .         .         .         .         .         .         .         .         .         .
11539 220.         .     O   .         .         .         .         .         .         .         .         .         .         .
11540 221. . . . . . . . .O. . . . . . . . . . . . . . . . . . . . . . . . . . . . . . . . . . . . . . . . . . . . . . . . . .
11541 222.         .      O  .         .         .         .         .         .         .         .         .         .         .
11542 223.         .       O .         .         .         .         .         .         .         .         .         .         .
11543 224.         .      O  .         .         .         .         .         .         .         .         .         .         .
11544 225.         .      O  .         .         .         .         .         .         .         .         .         .         .
11545 226.         .      O  .         .         .         .         .         .         .         .         .         .         .
11546 227.         .      O  .         .         .         .         .         .         .         .         .         .         .
11547 228.         .      O  .         .         .         .         .         .         .         .         .         .         .
11548 229.         .      O  .         .         .         .         .         .         .         .         .         .         .
11549 230.         .      O  .         .         .         .         .         .         .         .         .         .         .
11550 231. . . . . . . . .O. . . . . . . . . . . . . . . . . . . . . . . . . . . . . . . . . . . . . . . . . . . . . . . . . .
11551 232.         .      O  .         .         .         .         .         .         .         .         .         .         .
11552 233.         .      O  .         .         .         .         .         .         .         .         .         .         .
11553 234.         .      O  .         .         .         .         .         .         .         .         .         .         .
11554 235.         .     O   .         .         .         .         .         .         .         .         .         .         .
11555 236.         .         . O       .         .         .         .         .         .         .         .         .         .
11556 237.         .         .        O.         .         .         .         .         .         .         .         .         .
11557 238.         .         .         .      O  .         .         .         .         .         .         .         .         .
11558 239.         .         .         .         .   O     .         .         .         .         .         .         .         .
11559 240.         .         .         .         .         .O        .         .         .         .         .         .         .
11600 241. . . . . . . . . . . . . . . . . . . . . . . . . . . . O . . . . . . . . . . . . . . . . . . . . . . . . . . . . . . .
11601 242.         .         .         .         .         .         .    O    .         .         .         .         .         .
11602 243.         .         .         .         .         .         .         . O       .         .         .         .         .
11603 244.         .         .         .         .         .         .         .        O.         .         .         .         .
11604 245.         .         .         .         .         .         .         .         .     O   .         .         .         .
11605 246.         .         .         .         .         .         .         .         .         .   O     .         .         .
11606 247.         .         .         .         .         .         .         .         .         .       O .         .         .
11607 248.         .         .         .         .         .         .         .         .         O         .         .         .
11608 249.         .         .         .         .         .         .         .         .  O      .         .         .         .
11609 250.         .         .         .         .         .         .         .    O    .         .         .         .         .
11610 251. . . . . . . . . . . . . . . . . . . . . . . . . . . . . . . . . O . . . . . . . . . . . . . . . . . . . . . . . . . .
11611 252.         .         .         .         .         .         .O        .         .         .         .         .         .
11612 253.         .         .         .         .         .  O      .         .         .         .         .         .         .
11613 254.         .         .         .         .     O   .         .         .         .         .         .         .         .
11614 255.         .         .         .        O.         .         .         .         .         .         .         .         .
11615 256.         .         .         .O        .         .         .         .         .         .         .         .         .
11616 257.         .         .     O   .         .         .         .         .         .         .         .         .         .
11617 258.         .         O         .         .         .         .         .         .         .         .         .         .
11618 259.         .   O     .         .         .         .         .         .         .         .         .         .         .
11619 260.         .   O     .         .         .         .         .         .         .         .         .         .         .
11620 261. . . . . . .O. . . . . . . . . . . . . . . . . . . . . . . . . . . . . . . . . . . . . . . . . . . . . . . . . . . . .
11621 262.         .  O      .         .         .         .         .         .         .         .         .         .         .
11622 263.         . O       .         .         .         .         .         .         .         .         .         .         .
11623 264.         . O       .         .         .         .         .         .         .         .         .         .         .
11624 265.         . O       .         .         .         .         .         .         .         .         .         .         .
11625 266.         .O        .         .         .         .         .         .         .         .         .         .         .
11626 267.         .O        .         .         .         .         .         .         .         .         .         .         .
11627 268.         .O        .         .         .         .         .         .         .         .         .         .         .
11628 269.         O         .         .         .         .         .         .         .         .         .         .         .
11629 270.         O         .         .         .         .         .         .         .         .         .         .         .
11630 271. . . . .O. . . . . . . . . . . . . . . . . . . . . . . . . . . . . . . . . . . . . . . . . . . . . . . . . . . . . . .
11631 272.        O.         .         .         .         .         .         .         .         .         .         .         .
11632 273.        O.         .         .         .         .         .         .         .         .         .         .         .
11633 274.        O.         .         .         .         .         .         .         .         .         .         .         .
11634 275.        O.         .         .         .         .         .         .         .         .         .         .         .
11635 276.       O .         .         .         .         .         .         .         .         .         .         .         .
11636 277.       O .         .         .         .         .         .         .         .         .         .         .         .
11637 278.       O .         .         .         .         .         .         .         .         .         .         .         .
11638 279.       O .         .         .         .         .         .         .         .         .         .         .         .
11639 280.       O .         .         .         .         .         .         .         .         .         .         .         .
11640 281. . . . O . . . . . . . . . . . . . . . . . . . . . . . . . . . . . . . . . . . . . . . . . . . . . . . . . . . . . . .
11641 282.       O .         .         .         .         .         .         .         .         .         .         .         .
11642 283.      O  .         .         .         .         .         .         .         .         .         .         .         .
11643 284.      O  .         .         .         .         .         .         .         .         .         .         .         .
11644 285.      O  .         .         .         .         .         .         .         .         .         .         .         .
11645 286.      O  .         .         .         .         .         .         .         .         .         .         .         .
11646 287.      O  .         .         .         .         .         .         .         .         .         .         .         .
11647 288.      O  .         .         .         .         .         .         .         .         .         .         .         .
11648 289.      O  .         .         .         .         .         .         .         .         .         .         .         .
11649 290.      O  .         .         .         .         .         .         .         .         .         .         .         .
11650 291. . . .O. . . . . . . . . . . . . . . . . . . . . . . . . . . . . . . . . . . . . . . . . . . . . . . . . . . . . . . .
11651 292.      O  .         .         .         .         .         .         .         .         .         .         .         .
11652 293.     O   .         .         .         .         .         .         .         .         .         .         .         .
11653 294.     O   .         .         .         .         .         .         .         .         .         .         .         .
11654 295.     O   .         .         .         .         .         .         .         .         .         .         .         .
11655 296.     O   .         .         .         .         .         .         .         .         .         .         .         .
```

```
  11656 297.     O   .         .         .         .         .         .         .         .         .         .         .         .
  11657 298.     O   .         .         .         .         .         .         .         .         .         .         .         .
  11658 299.     O   .         .         .         .         .         .         .         .         .         .         .         .
  11659 300.-----O---.---------.---------.---------.---------.---------.---------.---------.---------.---------.---------.---------.
1



 *** *** *** *** *** *** *** *** *** *** *** *** *** *** *** *** *** *** *** *** *** *** *** *** *** *** *** *** *** *** *** *** ***


             **************
             *            *
   42 KK     *     VAULT  *     300
             *            *
             **************

   43 KO         OUTPUT CONTROL VARIABLES
                        IPRNT           2  PRINT CONTROL
                        IPLOT           2  PLOT CONTROL
                        QSCAL          0.  HYDROGRAPH PLOT SCALE
                        IPNCH           0  PUNCH COMPUTED HYDROGRAPH
                         IOUT          21  SAVE HYDROGRAPH ON THIS UNIT
                        ISAV1           1  FIRST ORDINATE PUNCHED OR SAVED
                        ISAV2         300  LAST ORDINATE PUNCHED OR SAVED
                       TIMINT        .017  TIME INTERVAL IN HOURS

                            VAULT 300

                HYDROGRAPH ROUTING DATA

   45 RS          STORAGE ROUTING
                        NSTPS           1  NUMBER OF SUBREACHES
                         ITYP        ELEV  TYPE OF INITIAL CONDITION
                       RSVRIC        5.00  INITIAL CONDITION
                            X         .00 WORKING R AND D COEFFICIENT

   46 SV            STORAGE          .0        .2        .5        .9       1.2       1.5       1.7       1.8       2.0       2.1
                                    2.3       2.5       2.6       2.8       3.0       3.1       3.3       3.4       3.6       3.8

   48 SQ          DISCHARGE          0.        1.        1.        1.        1.        1.        2.        4.        6.        8.
                                     9.        9.       12.       17.       22.       25.       34.       48.       64.       84.

   50 SE          ELEVATION         .00      1.00      2.00      3.00      4.00      5.00      5.50      6.00      6.50      7.00
                                   7.50      8.00      8.50      9.00      9.50     10.00     10.50     11.00     11.50     12.00
                                                                 ***

 ***********************************************************************************************************************************

                                                   HYDROGRAPH AT STATION    VAULT

 ***********************************************************************************************************************************
                                            *                                           *
  DA MON HRMN ORD  OUTFLOW  STORAGE   STAGE * DA MON HRMN ORD  OUTFLOW  STORAGE   STAGE * DA MON HRMN ORD  OUTFLOW  STORAGE   STAGE
                                            *                                           *
   1 JAN 1200   1       1.      1.5     5.0 *  1 JAN 1340 101       3.      1.8     5.8 *  1 JAN 1520 201       7.      2.1     6.8
   1 JAN 1201   2       1.      1.5     5.0 *  1 JAN 1341 102       3.      1.8     5.8 *  1 JAN 1521 202       7.      2.1     6.8
   1 JAN 1202   3       1.      1.5     5.0 *  1 JAN 1342 103       3.      1.8     5.8 *  1 JAN 1522 203       7.      2.1     6.8
   1 JAN 1203   4       1.      1.5     5.0 *  1 JAN 1343 104       3.      1.8     5.9 *  1 JAN 1523 204       7.      2.1     6.8
   1 JAN 1204   5       1.      1.5     5.0 *  1 JAN 1344 105       3.      1.8     5.9 *  1 JAN 1524 205       7.      2.1     6.8
   1 JAN 1205   6       1.      1.5     5.0 *  1 JAN 1345 106       3.      1.8     5.9 *  1 JAN 1525 206       7.      2.1     6.9
   1 JAN 1206   7       1.      1.5     5.0 *  1 JAN 1346 107       3.      1.8     5.9 *  1 JAN 1526 207       7.      2.1     6.9
   1 JAN 1207   8       1.      1.5     5.0 *  1 JAN 1347 108       3.      1.8     5.9 *  1 JAN 1527 208       7.      2.1     6.9
   1 JAN 1208   9       1.      1.5     5.1 *  1 JAN 1348 109       3.      1.8     5.9 *  1 JAN 1528 209       7.      2.1     6.9
   1 JAN 1209  10       1.      1.5     5.1 *  1 JAN 1349 110       3.      1.8     5.9 *  1 JAN 1529 210       8.      2.1     6.9
   1 JAN 1210  11       1.      1.5     5.1 *  1 JAN 1350 111       3.      1.8     5.9 *  1 JAN 1530 211       8.      2.1     7.0
   1 JAN 1211  12       1.      1.5     5.1 *  1 JAN 1351 112       3.      1.8     5.9 *  1 JAN 1531 212       8.      2.1     7.0
   1 JAN 1212  13       1.      1.5     5.1 *  1 JAN 1352 113       3.      1.8     5.9 *  1 JAN 1532 213       8.      2.1     7.0
   1 JAN 1213  14       1.      1.5     5.1 *  1 JAN 1353 114       3.      1.8     5.9 *  1 JAN 1533 214       8.      2.2     7.0
   1 JAN 1214  15       1.      1.5     5.1 *  1 JAN 1354 115       3.      1.8     5.9 *  1 JAN 1534 215       8.      2.2     7.0
   1 JAN 1215  16       1.      1.5     5.1 *  1 JAN 1355 116       3.      1.8     5.9 *  1 JAN 1535 216       8.      2.2     7.1
   1 JAN 1216  17       1.      1.5     5.1 *  1 JAN 1356 117       3.      1.8     6.0 *  1 JAN 1536 217       8.      2.2     7.1
   1 JAN 1217  18       1.      1.5     5.1 *  1 JAN 1357 118       3.      1.8     6.0 *  1 JAN 1537 218       8.      2.2     7.1
   1 JAN 1218  19       1.      1.5     5.1 *  1 JAN 1358 119       3.      1.8     6.0 *  1 JAN 1538 219       8.      2.2     7.2
   1 JAN 1219  20       2.      1.5     5.2 *  1 JAN 1359 120       4.      1.8     6.0 *  1 JAN 1539 220       8.      2.2     7.2
   1 JAN 1220  21       2.      1.5     5.2 *  1 JAN 1400 121       4.      1.8     6.0 *  1 JAN 1540 221       8.      2.2     7.2
   1 JAN 1221  22       2.      1.6     5.2 *  1 JAN 1401 122       4.      1.8     6.0 *  1 JAN 1541 222       8.      2.2     7.3
   1 JAN 1222  23       2.      1.6     5.2 *  1 JAN 1402 123       4.      1.8     6.0 *  1 JAN 1542 223       8.      2.2     7.3
   1 JAN 1223  24       2.      1.6     5.2 *  1 JAN 1403 124       4.      1.8     6.0 *  1 JAN 1543 224       8.      2.3     7.3
   1 JAN 1224  25       2.      1.6     5.2 *  1 JAN 1404 125       4.      1.8     6.0 *  1 JAN 1544 225       8.      2.3     7.4
   1 JAN 1225  26       2.      1.6     5.2 *  1 JAN 1405 126       4.      1.8     6.0 *  1 JAN 1545 226       8.      2.3     7.4
   1 JAN 1226  27       2.      1.6     5.2 *  1 JAN 1406 127       4.      1.8     6.0 *  1 JAN 1546 227       9.      2.3     7.5
   1 JAN 1227  28       2.      1.6     5.2 *  1 JAN 1407 128       4.      1.8     6.0 *  1 JAN 1547 228       9.      2.3     7.5
```

```
  1 JAN 1228  29      2.      1.6      5.2 *  1 JAN 1408 129      4.      1.8      6.0 *  1 JAN 1548 229      9.      2.3      7.5
  1 JAN 1229  30      2.      1.6      5.2 *  1 JAN 1409 130      4.      1.8      6.1 *  1 JAN 1549 230      9.      2.3      7.6
  1 JAN 1230  31      2.      1.6      5.3 *  1 JAN 1410 131      4.      1.8      6.1 *  1 JAN 1550 231      9.      2.3      7.6
  1 JAN 1231  32      2.      1.6      5.3 *  1 JAN 1411 132      4.      1.8      6.1 *  1 JAN 1551 232      9.      2.3      7.6
  1 JAN 1232  33      2.      1.6      5.3 *  1 JAN 1412 133      4.      1.8      6.1 *  1 JAN 1552 233      9.      2.4      7.7
  1 JAN 1233  34      2.      1.6      5.3 *  1 JAN 1413 134      4.      1.8      6.1 *  1 JAN 1553 234      9.      2.4      7.7
  1 JAN 1234  35      2.      1.6      5.3 *  1 JAN 1414 135      4.      1.9      6.1 *  1 JAN 1554 235      9.      2.4      7.7
  1 JAN 1235  36      2.      1.6      5.3 *  1 JAN 1415 136      4.      1.9      6.1 *  1 JAN 1555 236      9.      2.4      7.8
  1 JAN 1236  37      2.      1.6      5.3 *  1 JAN 1416 137      4.      1.9      6.1 *  1 JAN 1556 237      9.      2.4      7.8
  1 JAN 1237  38      2.      1.6      5.3 *  1 JAN 1417 138      4.      1.9      6.1 *  1 JAN 1557 238      9.      2.4      7.9
  1 JAN 1238  39      2.      1.6      5.3 *  1 JAN 1418 139      4.      1.9      6.1 *  1 JAN 1558 239     10.      2.5      8.1
  1 JAN 1239  40      2.      1.6      5.3 *  1 JAN 1419 140      4.      1.9      6.1 *  1 JAN 1559 240     11.      2.5      8.2
  1 JAN 1240  41      2.      1.6      5.3 *  1 JAN 1420 141      4.      1.9      6.1 *  1 JAN 1600 241     12.      2.6      8.4
  1 JAN 1241  42      2.      1.6      5.3 *  1 JAN 1421 142      4.      1.9      6.1 *  1 JAN 1601 242     13.      2.7      8.6
  1 JAN 1242  43      2.      1.6      5.4 *  1 JAN 1422 143      4.      1.9      6.2 *  1 JAN 1602 243     15.      2.7      8.9
  1 JAN 1243  44      2.      1.6      5.4 *  1 JAN 1423 144      4.      1.9      6.2 *  1 JAN 1603 244     18.      2.8      9.1
  1 JAN 1244  45      2.      1.6      5.4 *  1 JAN 1424 145      4.      1.9      6.2 *  1 JAN 1604 245     21.      2.9      9.4
  1 JAN 1245  46      2.      1.6      5.4 *  1 JAN 1425 146      4.      1.9      6.2 *  1 JAN 1605 246     23.      3.0      9.7
  1 JAN 1246  47      2.      1.6      5.4 *  1 JAN 1426 147      4.      1.9      6.2 *  1 JAN 1606 247     25.      3.1     10.0
  1 JAN 1247  48      2.      1.6      5.4 *  1 JAN 1427 148      4.      1.9      6.2 *  1 JAN 1607 248     30.      3.2     10.3
  1 JAN 1248  49      2.      1.6      5.4 *  1 JAN 1428 149      4.      1.9      6.2 *  1 JAN 1608 249     34.      3.3     10.5
  1 JAN 1249  50      2.      1.6      5.4 *  1 JAN 1429 150      4.      1.9      6.2 *  1 JAN 1609 250     38.      3.3     10.7
  1 JAN 1250  51      2.      1.6      5.4 *  1 JAN 1430 151      4.      1.9      6.2 *  1 JAN 1610 251     42.      3.4     10.8
  1 JAN 1251  52      2.      1.6      5.4 *  1 JAN 1431 152      4.      1.9      6.2 *  1 JAN 1611 252     45.      3.4     10.9
  1 JAN 1252  53      2.      1.6      5.4 *  1 JAN 1432 153      5.      1.9      6.2 *  1 JAN 1612 253     46.      3.4     10.9
  1 JAN 1253  54      2.      1.6      5.5 *  1 JAN 1433 154      5.      1.9      6.2 *  1 JAN 1613 254     46.      3.4     11.0
  1 JAN 1254  55      2.      1.6      5.5 *  1 JAN 1434 155      5.      1.9      6.3 *  1 JAN 1614 255     46.      3.4     10.9
  1 JAN 1255  56      2.      1.6      5.5 *  1 JAN 1435 156      5.      1.9      6.3 *  1 JAN 1615 256     45.      3.4     10.9
  1 JAN 1256  57      2.      1.7      5.5 *  1 JAN 1436 157      5.      1.9      6.3 *  1 JAN 1616 257     43.      3.4     10.8
  1 JAN 1257  58      2.      1.7      5.5 *  1 JAN 1437 158      5.      1.9      6.3 *  1 JAN 1617 258     41.      3.4     10.8
  1 JAN 1258  59      2.      1.7      5.5 *  1 JAN 1438 159      5.      1.9      6.3 *  1 JAN 1618 259     38.      3.3     10.7
  1 JAN 1259  60      2.      1.7      5.5 *  1 JAN 1439 160      5.      1.9      6.3 *  1 JAN 1619 260     36.      3.3     10.6
  1 JAN 1300  61      2.      1.7      5.5 *  1 JAN 1440 161      5.      1.9      6.3 *  1 JAN 1620 261     33.      3.3     10.5
  1 JAN 1301  62      2.      1.7      5.5 *  1 JAN 1441 162      5.      1.9      6.3 *  1 JAN 1621 262     32.      3.2     10.4
  1 JAN 1302  63      2.      1.7      5.5 *  1 JAN 1442 163      5.      1.9      6.3 *  1 JAN 1622 263     31.      3.2     10.3
  1 JAN 1303  64      2.      1.7      5.5 *  1 JAN 1443 164      5.      1.9      6.3 *  1 JAN 1623 264     29.      3.2     10.2
  1 JAN 1304  65      2.      1.7      5.5 *  1 JAN 1444 165      5.      1.9      6.3 *  1 JAN 1624 265     28.      3.2     10.2
  1 JAN 1305  66      2.      1.7      5.6 *  1 JAN 1445 166      5.      1.9      6.3 *  1 JAN 1625 266     27.      3.1     10.1
  1 JAN 1306  67      2.      1.7      5.6 *  1 JAN 1446 167      5.      1.9      6.4 *  1 JAN 1626 267     26.      3.1     10.0
  1 JAN 1307  68      2.      1.7      5.6 *  1 JAN 1447 168      5.      1.9      6.4 *  1 JAN 1627 268     25.      3.1     10.0
  1 JAN 1308  69      2.      1.7      5.6 *  1 JAN 1448 169      5.      1.9      6.4 *  1 JAN 1628 269     25.      3.1      9.9
  1 JAN 1309  70      2.      1.7      5.6 *  1 JAN 1449 170      5.      1.9      6.4 *  1 JAN 1629 270     24.      3.1      9.8
  1 JAN 1310  71      2.      1.7      5.6 *  1 JAN 1450 171      5.      1.9      6.4 *  1 JAN 1630 271     24.      3.0      9.8
  1 JAN 1311  72      2.      1.7      5.6 *  1 JAN 1451 172      5.      2.0      6.4 *  1 JAN 1631 272     24.      3.0      9.7
  1 JAN 1312  73      2.      1.7      5.6 *  1 JAN 1452 173      5.      2.0      6.4 *  1 JAN 1632 273     23.      3.0      9.7
  1 JAN 1313  74      2.      1.7      5.6 *  1 JAN 1453 174      5.      2.0      6.4 *  1 JAN 1633 274     23.      3.0      9.6
  1 JAN 1314  75      2.      1.7      5.6 *  1 JAN 1454 175      5.      2.0      6.4 *  1 JAN 1634 275     22.      3.0      9.5
  1 JAN 1315  76      3.      1.7      5.6 *  1 JAN 1455 176      5.      2.0      6.5 *  1 JAN 1635 276     22.      2.9      9.5
  1 JAN 1316  77      3.      1.7      5.6 *  1 JAN 1456 177      5.      2.0      6.5 *  1 JAN 1636 277     21.      2.9      9.4
  1 JAN 1317  78      3.      1.7      5.7 *  1 JAN 1457 178      5.      2.0      6.5 *  1 JAN 1637 278     21.      2.9      9.4
  1 JAN 1318  79      3.      1.7      5.7 *  1 JAN 1458 179      5.      2.0      6.5 *  1 JAN 1638 279     20.      2.9      9.3
  1 JAN 1319  80      3.      1.7      5.7 *  1 JAN 1459 180      6.      2.0      6.5 *  1 JAN 1639 280     20.      2.9      9.3
  1 JAN 1320  81      3.      1.7      5.7 *  1 JAN 1500 181      6.      2.0      6.5 *  1 JAN 1640 281     19.      2.9      9.2
  1 JAN 1321  82      3.      1.7      5.7 *  1 JAN 1501 182      6.      2.0      6.5 *  1 JAN 1641 282     19.      2.8      9.2
  1 JAN 1322  83      3.      1.7      5.7 *  1 JAN 1502 183      6.      2.0      6.5 *  1 JAN 1642 283     18.      2.8      9.1
  1 JAN 1323  84      3.      1.7      5.7 *  1 JAN 1503 184      6.      2.0      6.5 *  1 JAN 1643 284     17.      2.8      9.1
  1 JAN 1324  85      3.      1.7      5.7 *  1 JAN 1504 185      6.      2.0      6.6 *  1 JAN 1644 285     17.      2.8      9.0
  1 JAN 1325  86      3.      1.7      5.7 *  1 JAN 1505 186      6.      2.0      6.6 *  1 JAN 1645 286     17.      2.8      9.0
  1 JAN 1326  87      3.      1.7      5.7 *  1 JAN 1506 187      6.      2.0      6.6 *  1 JAN 1646 287     16.      2.8      9.0
  1 JAN 1327  88      3.      1.7      5.7 *  1 JAN 1507 188      6.      2.0      6.6 *  1 JAN 1647 288     16.      2.8      8.9
  1 JAN 1328  89      3.      1.7      5.7 *  1 JAN 1508 189      6.      2.0      6.6 *  1 JAN 1648 289     16.      2.8      8.9
  1 JAN 1329  90      3.      1.7      5.7 *  1 JAN 1509 190      6.      2.0      6.6 *  1 JAN 1649 290     15.      2.7      8.8
  1 JAN 1330  91      3.      1.7      5.8 *  1 JAN 1510 191      6.      2.0      6.6 *  1 JAN 1650 291     15.      2.7      8.8
  1 JAN 1331  92      3.      1.7      5.8 *  1 JAN 1511 192      6.      2.0      6.6 *  1 JAN 1651 292     15.      2.7      8.8
  1 JAN 1332  93      3.      1.7      5.8 *  1 JAN 1512 193      6.      2.0      6.7 *  1 JAN 1652 293     14.      2.7      8.7
  1 JAN 1333  94      3.      1.7      5.8 *  1 JAN 1513 194      6.      2.0      6.7 *  1 JAN 1653 294     14.      2.7      8.7
  1 JAN 1334  95      3.      1.8      5.8 *  1 JAN 1514 195      6.      2.0      6.7 *  1 JAN 1654 295     14.      2.7      8.7
  1 JAN 1335  96      3.      1.8      5.8 *  1 JAN 1515 196      6.      2.0      6.7 *  1 JAN 1655 296     13.      2.7      8.6
  1 JAN 1336  97      3.      1.8      5.8 *  1 JAN 1516 197      6.      2.1      6.7 *  1 JAN 1656 297     13.      2.7      8.6
  1 JAN 1337  98      3.      1.8      5.8 *  1 JAN 1517 198      7.      2.1      6.7 *  1 JAN 1657 298     13.      2.7      8.6
  1 JAN 1338  99      3.      1.8      5.8 *  1 JAN 1518 199      7.      2.1      6.7 *  1 JAN 1658 299     13.      2.6      8.6
  1 JAN 1339 100      3.      1.8      5.8 *  1 JAN 1519 200      7.      2.1      6.8 *  1 JAN 1659 300     12.      2.6      8.5
                                           *                                          *
*************************************************************************************************************************************

 PEAK FLOW     TIME                          MAXIMUM AVERAGE FLOW
                                    6-HR       24-HR       72-HR      4.98-HR
+   (CFS)      (HR)
                            (CFS)
+      46.     4.22                   8.          8.          8.          8.
                         (INCHES)     1.093       1.093       1.093       1.093
                          (AC-FT)       3.          3.          3.          3.

PEAK STORAGE   TIME                          MAXIMUM AVERAGE STORAGE
```

```
                                      6-HR       24-HR       72-HR      4.98-HR
+  (AC-FT)      (HR)
        3.      4.22                    2.          2.          2.           2.

  PEAK STAGE    TIME                          MAXIMUM AVERAGE STAGE
                                      6-HR       24-HR       72-HR      4.98-HR
+   (FEET)      (HR)
     10.96      4.22                  6.78        6.78        6.78         6.78

                         CUMULATIVE AREA =     .06 SQ MI

1                                                          STATION    VAULT

                          (I) INFLOW,   (O) OUTFLOW
          0.       20.       40.       60.       80.      100.        0.        0.        0.        0.        0.        0.        0.
                                                                                (S) STORAGE
          .0        .0        .0        .0        .0        .0       1.0       1.5       2.0       2.5       3.0       3.5        .0
 DAHRMN PER
  11200   1.I--------.---------.---------.---------.---------.---------.---------S---------.---------.---------.---------.---------.
  11201   2.I        .         .         .         .         .         .         S         .         .         .         .         .
  11202   3.I        .         .         .         .         .         .         S         .         .         .         .         .
  11203   4.I        .         .         .         .         .         .         S         .         .         .         .         .
  11204   5.I        .         .         .         .         .         .         S         .         .         .         .         .
  11205   6.OI       .         .         .         .         .         .         S         .         .         .         .         .
  11206   7.OI       .         .         .         .         .         .         S         .         .         .         .         .
  11207   8.OI       .         .         .         .         .         .         S         .         .         .         .         .
  11208   9.OI       .         .         .         .         .         .         S         .         .         .         .         .
  11209  10.OI       .         .         .         .         .         .         S         .         .         .         .         .
  11210  11.OI . . . . . . . . . . . . . . . . . . . . . . . . . . . . . . . . . S . . . . . . . . . . . . . . . . . . . . . . . . .
  11211  12.OI       .         .         .         .         .         .         S         .         .         .         .         .
  11212  13.OI       .         .         .         .         .         .         .S        .         .         .         .         .
  11213  14.OI       .         .         .         .         .         .         .S        .         .         .         .         .
  11214  15.OI       .         .         .         .         .         .         .S        .         .         .         .         .
  11215  16.OI       .         .         .         .         .         .         .S        .         .         .         .         .
  11216  17.OI       .         .         .         .         .         .         .S        .         .         .         .         .
  11217  18.OI       .         .         .         .         .         .         .S        .         .         .         .         .
  11218  19.OI       .         .         .         .         .         .         .S        .         .         .         .         .
  11219  20.OI       .         .         .         .         .         .         .S        .         .         .         .         .
  11220  21.OI . . . . . . . . . . . . . . . . . . . . . . . . . . . . . . . . . . .S. . . . . . . . . . . . . . . . . . . . . . . .
  11221  22.OI       .         .         .         .         .         .         .S        .         .         .         .         .
  11222  23.OI       .         .         .         .         .         .         .S        .         .         .         .         .
  11223  24.OI       .         .         .         .         .         .         .S        .         .         .         .         .
  11224  25.OI       .         .         .         .         .         .         .S        .         .         .         .         .
  11225  26.OI       .         .         .         .         .         .         .S        .         .         .         .         .
  11226  27.OI       .         .         .         .         .         .         .S        .         .         .         .         .
  11227  28.OI       .         .         .         .         .         .         .S        .         .         .         .         .
  11228  29.OI       .         .         .         .         .         .         .S        .         .         .         .         .
  11229  30.OI       .         .         .         .         .         .         . S       .         .         .         .         .
  11230  31.OI . . . . . . . . . . . . . . . . . . . . . . . . . . . . . . . . . . . S . . . . . . . . . . . . . . . . . . . . . . . .
  11231  32.OI       .         .         .         .         .         .         . S       .         .         .         .         .
  11232  33.OI       .         .         .         .         .         .         . S       .         .         .         .         .
  11233  34.OI       .         .         .         .         .         .         . S       .         .         .         .         .
  11234  35.OI       .         .         .         .         .         .         . S       .         .         .         .         .
  11235  36.OI       .         .         .         .         .         .         . S       .         .         .         .         .
  11236  37.OI       .         .         .         .         .         .         . S       .         .         .         .         .
  11237  38.OI       .         .         .         .         .         .         . S       .         .         .         .         .
  11238  39.OI       .         .         .         .         .         .         . S       .         .         .         .         .
  11239  40.OI       .         .         .         .         .         .         . S       .         .         .         .         .
  11240  41.OI . . . . . . . . . . . . . . . . . . . . . . . . . . . . . . . . . . . S . . . . . . . . . . . . . . . . . . . . . . . .
  11241  42.OI       .         .         .         .         .         .         . S       .         .         .         .         .
  11242  43.OI       .         .         .         .         .         .         . S       .         .         .         .         .
  11243  44.OI       .         .         .         .         .         .         . S       .         .         .         .         .
  11244  45.OI       .         .         .         .         .         .         . S       .         .         .         .         .
  11245  46.OI       .         .         .         .         .         .         . S       .         .         .         .         .
  11246  47.OI       .         .         .         .         .         .         . S       .         .         .         .         .
  11247  48.OI       .         .         .         .         .         .         .  S      .         .         .         .         .
  11248  49.OI       .         .         .         .         .         .         .  S      .         .         .         .         .
  11249  50.OI       .         .         .         .         .         .         .  S      .         .         .         .         .
  11250  51.OI . . . . . . . . . . . . . . . . . . . . . . . . . . . . . . . . . . . .S. . . . . . . . . . . . . . . . . . . . . . .
  11251  52.OI       .         .         .         .         .         .         .  S      .         .         .         .         .
  11252  53.OI       .         .         .         .         .         .         .  S      .         .         .         .         .
  11253  54.OI       .         .         .         .         .         .         .  S      .         .         .         .         .
  11254  55.OI       .         .         .         .         .         .         .  S      .         .         .         .         .
  11255  56.OI       .         .         .         .         .         .         .  S      .         .         .         .         .
  11256  57.OI       .         .         .         .         .         .         .  S      .         .         .         .         .
  11257  58.OI       .         .         .         .         .         .         .  S      .         .         .         .         .
  11258  59.OI       .         .         .         .         .         .         .  S      .         .         .         .         .
  11259  60.OI       .         .         .         .         .         .         .  S      .         .         .         .         .
  11300  61.OI . . . . . . . . . . . . . . . . . . . . . . . . . . . . . . . . . . . .S. . . . . . . . . . . . . . . . . . . . . . .
  11301  62.OI       .         .         .         .         .         .         .  S      .         .         .         .         .
  11302  63.OI       .         .         .         .         .         .         .  S      .         .         .         .         .
  11303  64.OI       .         .         .         .         .         .         .  S      .         .         .         .         .
  11304  65.OI       .         .         .         .         .         .         .  S      .         .         .         .         .
  11305  66.OI       .         .         .         .         .         .         .   S     .         .         .         .         .
```

```
11306  67.OI       .         .         .         .         .         .         .   S     .         .         .         .         .
11307  68.OI       .         .         .         .         .         .         .   S     .         .         .         .         .
11308  69.OI       .         .         .         .         .         .         .   S     .         .         .         .         .
11309  70.OI       .         .         .         .         .         .         .   S     .         .         .         .         .
11310  71.OI . . . . . . . . . . . . . . . . . . . . . . . . . . . . . . . . . . . S . . . . . . . . . . . . . . . . . . . . . . .
11311  72.OI       .         .         .         .         .         .         .   S     .         .         .         .         .
11312  73.OI       .         .         .         .         .         .         .   S     .         .         .         .         .
11313  74.OI       .         .         .         .         .         .         .   S     .         .         .         .         .
11314  75.OI       .         .         .         .         .         .         .   S     .         .         .         .         .
11315  76.OI       .         .         .         .         .         .         .   S     .         .         .         .         .
11316  77.OI       .         .         .         .         .         .         .   S     .         .         .         .         .
11317  78.OI       .         .         .         .         .         .         .   S     .         .         .         .         .
11318  79.OI       .         .         .         .         .         .         .   S     .         .         .         .         .
11319  80.OI       .         .         .         .         .         .         .   S     .         .         .         .         .
11320  81.OI . . . . . . . . . . . . . . . . . . . . . . . . . . . . . . . . . . . S . . . . . . . . . . . . . . . . . . . . . . .
11321  82.OI       .         .         .         .         .         .         .   S     .         .         .         .         .
11322  83.OI       .         .         .         .         .         .         .   S     .         .         .         .         .
11323  84.OI       .         .         .         .         .         .         .    S    .         .         .         .         .
11324  85.OI       .         .         .         .         .         .         .    S    .         .         .         .         .
11325  86.OI       .         .         .         .         .         .         .    S    .         .         .         .         .
11326  87.OI       .         .         .         .         .         .         .    S    .         .         .         .         .
11327  88.OI       .         .         .         .         .         .         .    S    .         .         .         .         .
11328  89.OI       .         .         .         .         .         .         .    S    .         .         .         .         .
11329  90.OI       .         .         .         .         .         .         .    S    .         .         .         .         .
11330  91.OI . . . . . . . . . . . . . . . . . . . . . . . . . . . . . . . . . . . .S. . . . . . . . . . . . . . . . . . . . . .
11331  92.OI       .         .         .         .         .         .         .    S    .         .         .         .         .
11332  93.OI       .         .         .         .         .         .         .    S    .         .         .         .         .
11333  94.OI       .         .         .         .         .         .         .    S    .         .         .         .         .
11334  95.OI       .         .         .         .         .         .         .    S    .         .         .         .         .
11335  96.OI       .         .         .         .         .         .         .    S    .         .         .         .         .
11336  97.OI       .         .         .         .         .         .         .    S    .         .         .         .         .
11337  98. I       .         .         .         .         .         .         .    S    .         .         .         .         .
11338  99. I       .         .         .         .         .         .         .    S    .         .         .         .         .
11339 100. I       .         .         .         .         .         .         .    S    .         .         .         .         .
11340 101. I . . . . . . . . . . . . . . . . . . . . . . . . . . . . . . . . . . . .S. . . . . . . . . . . . . . . . . . . . . .
11341 102. I       .         .         .         .         .         .         .    S    .         .         .         .         .
11342 103. I       .         .         .         .         .         .         .    S    .         .         .         .         .
11343 104. I       .         .         .         .         .         .         .    S    .         .         .         .         .
11344 105. OI      .         .         .         .         .         .         .     S   .         .         .         .         .
11345 106. OI      .         .         .         .         .         .         .     S   .         .         .         .         .
11346 107. OI      .         .         .         .         .         .         .     S   .         .         .         .         .
11347 108. OI      .         .         .         .         .         .         .     S   .         .         .         .         .
11348 109. OI      .         .         .         .         .         .         .     S   .         .         .         .         .
11349 110. OI      .         .         .         .         .         .         .     S   .         .         .         .         .
11350 111. OI. . . . . . . . . . . . . . . . . . . . . . . . . . . . . . . . . . . S . . . . . . . . . . . . . . . . . . . . . .
11351 112. OI      .         .         .         .         .         .         .     S   .         .         .         .         .
11352 113. OI      .         .         .         .         .         .         .     S   .         .         .         .         .
11353 114. OI      .         .         .         .         .         .         .     S   .         .         .         .         .
11354 115. OI      .         .         .         .         .         .         .     S   .         .         .         .         .
11355 116. OI      .         .         .         .         .         .         .     S   .         .         .         .         .
11356 117. OI      .         .         .         .         .         .         .     S   .         .         .         .         .
11357 118. OI      .         .         .         .         .         .         .     S   .         .         .         .         .
11358 119. OI      .         .         .         .         .         .         .     S   .         .         .         .         .
11359 120. OI      .         .         .         .         .         .         .     S   .         .         .         .         .
11400 121. OI. . . . . . . . . . . . . . . . . . . . . . . . . . . . . . . . . . . S . . . . . . . . . . . . . . . . . . . . . .
11401 122. OI      .         .         .         .         .         .         .     S   .         .         .         .         .
11402 123. OI      .         .         .         .         .         .         .     S   .         .         .         .         .
11403 124. OI      .         .         .         .         .         .         .     S   .         .         .         .         .
11404 125. OI      .         .         .         .         .         .         .      S  .         .         .         .         .
11405 126. OI      .         .         .         .         .         .         .      S  .         .         .         .         .
11406 127. OI      .         .         .         .         .         .         .      S  .         .         .         .         .
11407 128. OI      .         .         .         .         .         .         .      S  .         .         .         .         .
11408 129. OI      .         .         .         .         .         .         .      S  .         .         .         .         .
11409 130. OI      .         .         .         .         .         .         .      S  .         .         .         .         .
11410 131. OI. . . . . . . . . . . . . . . . . . . . . . . . . . . . . . . . . . . .S. . . . . . . . . . . . . . . . . . . . .
11411 132. OI      .         .         .         .         .         .         .      S  .         .         .         .         .
11412 133. OI      .         .         .         .         .         .         .      S  .         .         .         .         .
11413 134. OI      .         .         .         .         .         .         .      S  .         .         .         .         .
11414 135. OI      .         .         .         .         .         .         .      S  .         .         .         .         .
11415 136. OI      .         .         .         .         .         .         .      S  .         .         .         .         .
11416 137. OI      .         .         .         .         .         .         .      S  .         .         .         .         .
11417 138. OI      .         .         .         .         .         .         .      S  .         .         .         .         .
11418 139. OI      .         .         .         .         .         .         .      S  .         .         .         .         .
11419 140. OI      .         .         .         .         .         .         .      S  .         .         .         .         .
11420 141. OI. . . . . . . . . . . . . . . . . . . . . . . . . . . . . . . . . . . .S. . . . . . . . . . . . . . . . . . . . .
11421 142. OI      .         .         .         .         .         .         .      S  .         .         .         .         .
11422 143. OI      .         .         .         .         .         .         .      S  .         .         .         .         .
11423 144. OI      .         .         .         .         .         .         .      S  .         .         .         .         .
11424 145. OI      .         .         .         .         .         .         .       S .         .         .         .         .
11425 146. OI      .         .         .         .         .         .         .       S .         .         .         .         .
11426 147. OI      .         .         .         .         .         .         .       S .         .         .         .         .
11427 148. OI      .         .         .         .         .         .         .       S .         .         .         .         .
11428 149. OI      .         .         .         .         .         .         .       S .         .         .         .         .
11429 150. OI      .         .         .         .         .         .         .       S .         .         .         .         .
```

```
11430 151. OI. . . . . . . . . . . . . . . . . . . . . . . . . . . . . . . . . . . . . S . . . . . . . . . . . . . . . . . . . . .
11431 152. OI      .         .         .         .         .         .         .       S .         .         .         .         .
11432 153. OI      .         .         .         .         .         .         .       S .         .         .         .         .
11433 154. OI      .         .         .         .         .         .         .       S .         .         .         .         .
11434 155. OI      .         .         .         .         .         .         .       S .         .         .         .         .
11435 156. OI      .         .         .         .         .         .         .       S .         .         .         .         .
11436 157. OI      .         .         .         .         .         .         .       S .         .         .         .         .
11437 158. OI      .         .         .         .         .         .         .       S .         .         .         .         .
11438 159. OI      .         .         .         .         .         .         .       S .         .         .         .         .
11439 160. OI      .         .         .         .         .         .         .       S .         .         .         .         .
11440 161. OI. . . . . . . . . . . . . . . . . . . . . . . . . . . . . . . . . . . . . S . . . . . . . . . . . . . . . . . . . . .
11441 162. OI      .         .         .         .         .         .         .       S .         .         .         .         .
11442 163. OI      .         .         .         .         .         .         .        S.         .         .         .         .
11443 164. OI      .         .         .         .         .         .         .        S.         .         .         .         .
11444 165. O I     .         .         .         .         .         .         .        S.         .         .         .         .
11445 166. O I     .         .         .         .         .         .         .        S.         .         .         .         .
11446 167. O I     .         .         .         .         .         .         .        S.         .         .         .         .
11447 168.  OI     .         .         .         .         .         .         .        S.         .         .         .         .
11448 169.  OI     .         .         .         .         .         .         .        S.         .         .         .         .
11449 170.  OI     .         .         .         .         .         .         .        S.         .         .         .         .
11450 171. .OI . . . . . . . . . . . . . . . . . . . . . . . . . . . . . . . . . . . .S. . . . . . . . . . . . . . . . . . . .
11451 172.  OI     .         .         .         .         .         .         .        S.         .         .         .         .
11452 173.  OI     .         .         .         .         .         .         .        S.         .         .         .         .
11453 174.  OI     .         .         .         .         .         .         .        S.         .         .         .         .
11454 175.  OI     .         .         .         .         .         .         .        S.         .         .         .         .
11455 176.  OI     .         .         .         .         .         .         .        S.         .         .         .         .
11456 177.  OI     .         .         .         .         .         .         .        S.         .         .         .         .
11457 178.  OI     .         .         .         .         .         .         .        S.         .         .         .         .
11458 179.  OI     .         .         .         .         .         .         .         S         .         .         .         .
11459 180.  OI     .         .         .         .         .         .         .         S         .         .         .         .
11500 181. .OI . . . . . . . . . . . . . . . . . . . . . . . . . . . . . . . . . . . . . S . . . . . . . . . . . . . . . . . . . .
11501 182.  OI     .         .         .         .         .         .         .         S         .         .         .         .
11502 183.  OI     .         .         .         .         .         .         .         S         .         .         .         .
11503 184.  OI     .         .         .         .         .         .         .         S         .         .         .         .
11504 185.  OI     .         .         .         .         .         .         .         S         .         .         .         .
11505 186.  OI     .         .         .         .         .         .         .         S         .         .         .         .
11506 187.  OI     .         .         .         .         .         .         .         S         .         .         .         .
11507 188.  OI     .         .         .         .         .         .         .         S         .         .         .         .
11508 189.  OI     .         .         .         .         .         .         .         S         .         .         .         .
11509 190.  O I    .         .         .         .         .         .         .         S         .         .         .         .
11510 191. .O.I. . . . . . . . . . . . . . . . . . . . . . . . . . . . . . . . . . . . . S . . . . . . . . . . . . . . . . . . . .
11511 192.  O I    .         .         .         .         .         .         .         .S        .         .         .         .
11512 193.  O I    .         .         .         .         .         .         .         .S        .         .         .         .
11513 194.  O I    .         .         .         .         .         .         .         .S        .         .         .         .
11514 195.  O I    .         .         .         .         .         .         .         .S        .         .         .         .
11515 196.  O I    .         .         .         .         .         .         .         .S        .         .         .         .
11516 197.  O I    .         .         .         .         .         .         .         .S        .         .         .         .
11517 198.  O I    .         .         .         .         .         .         .         .S        .         .         .         .
11518 199.  O I    .         .         .         .         .         .         .         .S        .         .         .         .
11519 200.  O I    .         .         .         .         .         .         .         .S        .         .         .         .
11520 201. .O.I. . . . . . . . . . . . . . . . . . . . . . . . . . . . . . . . . . . . .S. . . . . . . . . . . . . . . . . . .
11521 202.  O I    .         .         .         .         .         .         .         . S       .         .         .         .
11522 203.  O I    .         .         .         .         .         .         .         . S       .         .         .         .
11523 204.   O I   .         .         .         .         .         .         .         . S       .         .         .         .
11524 205.   O I   .         .         .         .         .         .         .         . S       .         .         .         .
11525 206.   O I   .         .         .         .         .         .         .         . S       .         .         .         .
11526 207.   O I   .         .         .         .         .         .         .         . S       .         .         .         .
11527 208.   O I   .         .         .         .         .         .         .         . S       .         .         .         .
11528 209.   O I   .         .         .         .         .         .         .         . S       .         .         .         .
11529 210.   O I   .         .         .         .         .         .         .         . S       .         .         .         .
11530 211. . O I . . . . . . . . . . . . . . . . . . . . . . . . . . . . . . . . . . . . . .S. . . . . . . . . . . . . . . . . .
11531 212.   O I   .         .         .         .         .         .         .         .  S      .         .         .         .
11532 213.   O I   .         .         .         .         .         .         .         .  S      .         .         .         .
11533 214.   O  I  .         .         .         .         .         .         .         .  S      .         .         .         .
11534 215.   O  I  .         .         .         .         .         .         .         .  S      .         .         .         .
11535 216.   O  I  .         .         .         .         .         .         .         .  S      .         .         .         .
11536 217.   O  I  .         .         .         .         .         .         .         .   S     .         .         .         .
11537 218.   O   I .         .         .         .         .         .         .         .   S     .         .         .         .
11538 219.   O   I .         .         .         .         .         .         .         .   S     .         .         .         .
11539 220.   O   I .         .         .         .         .         .         .         .   S     .         .         .         .
11540 221. . O . I . . . . . . . . . . . . . . . . . . . . . . . . . . . . . . . . . . . . . S . . . . . . . . . . . . . . . . . .
11541 222.   O    I.         .         .         .         .         .         .         .    S    .         .         .         .
11542 223.   O    I.         .         .         .         .         .         .         .    S    .         .         .         .
11543 224.   O    I.         .         .         .         .         .         .         .    S    .         .         .         .
11544 225.   O    I.         .         .         .         .         .         .         .    S    .         .         .         .
11545 226.   O    I.         .         .         .         .         .         .         .     S   .         .         .         .
11546 227.   O    I.         .         .         .         .         .         .         .     S   .         .         .         .
11547 228.   O    I.         .         .         .         .         .         .         .     S   .         .         .         .
11548 229.   O    I.         .         .         .         .         .         .         .     S   .         .         .         .
11549 230.   O   I .         .         .         .         .         .         .         .      S  .         .         .         .
11550 231. . O . I . . . . . . . . . . . . . . . . . . . . . . . . . . . . . . . . . . . . . . .S. . . . . . . . . . . . . . . .
11551 232.   O   I .         .         .         .         .         .         .         .      S  .         .         .         .
11552 233.   O   I .         .         .         .         .         .         .         .      S  .         .         .         .
11553 234.   O   I .         .         .         .         .         .         .         .      S  .         .         .         .
```

```
  11554 235.   O   I .         .         .         .         .         .         .         .       S .         .         .         .
  11555 236.    O    .I        .         .         .         .         .         .         .       S .         .         .         .
  11556 237.    O    .    I    .         .         .         .         .         .         .       S .         .         .         .
  11557 238.    O    .       I .         .         .         .         .         .         .        S.         .         .         .
  11558 239.    O    .         . I       .         .         .         .         .         .         S         .         .         .
  11559 240.    O    .         .    I    .         .         .         .         .         .         .S        .         .         .
  11600 241. . . O . . . . . . . . . . .I. . . . . . . . . . . . . . . . . . . . . . . . . . . . . . . S . . . . . . . . . . . . . .
  11601 242.      O  .         .         .  I      .         .         .         .         .         .  S      .         .         .
  11602 243.       O .         .         .     I   .         .         .         .         .         .    S    .         .         .
  11603 244.        O.         .         .         I         .         .         .         .         .      S  .         .         .
  11604 245.         O         .         .         .  I      .         .         .         .         .       S .         .         .
  11605 246.         . O       .         .         .      I  .         .         .         .         .         S         .         .
  11606 247.         .  O      .         .         .        I.         .         .         .         .         . S       .         .
  11607 248.         .    O    .         .         .    I    .         .         .         .         .         .   S     .         .
  11608 249.         .      O  .         .         .I        .         .         .         .         .         .    S    .         .
  11609 250.         .        O.         .       I .         .         .         .         .         .         .      S  .         .
  11610 251. . . . . . . . . . .O. . . . . . I . . . . . . . . . . . . . . . . . . . . . . . . . . . . . . . . . . . . .S. . . . . .
  11611 252.         .         . O       I         .         .         .         .         .         .         .       S .         .
  11612 253.         .         .  O   I  .         .         .         .         .         .         .         .       S .         .
  11613 254.         .         .  I      .         .         .         .         .         .         .         .        S.         .
  11614 255.         .        I.  O      .         .         .         .         .         .         .         .       S .         .
  11615 256.         .     I   . O       .         .         .         .         .         .         .         .       S .         .
  11616 257.         .  I      .O        .         .         .         .         .         .         .         .       S .         .
  11617 258.         I         O         .         .         .         .         .         .         .         .      S  .         .
  11618 259.      I  .        O.         .         .         .         .         .         .         .         .      S  .         .
  11619 260.      I  .       O .         .         .         .         .         .         .         .         .     S   .         .
  11620 261. . . .I. . . . .O. . . . . . . . . . . . . . . . . . . . . . . . . . . . . . . . . . . . . . . . . . . .S. . . . . . .
  11621 262.     I   .     O   .         .         .         .         .         .         .         .         .    S    .         .
  11622 263.     I   .    O    .         .         .         .         .         .         .         .         .   S     .         .
  11623 264.     I   .    O    .         .         .         .         .         .         .         .         .   S     .         .
  11624 265.     I   .   O     .         .         .         .         .         .         .         .         .  S      .         .
  11625 266.     I   .  O      .         .         .         .         .         .         .         .         .  S      .         .
  11626 267.    I    .  O      .         .         .         .         .         .         .         .         . S       .         .
  11627 268.    I    .  O      .         .         .         .         .         .         .         .         . S       .         .
  11628 269.    I    . O       .         .         .         .         .         .         .         .         . S       .         .
  11629 270.    I    . O       .         .         .         .         .         .         .         .         .S        .         .
  11630 271. . .I. . . O . . . . . . . . . . . . . . . . . . . . . . . . . . . . . . . . . . . . . . . . . . . . .S. . . . . . . . .
  11631 272.    I    . O       .         .         .         .         .         .         .         .         S         .         .
  11632 273.    I    . O       .         .         .         .         .         .         .         .         S         .         .
  11633 274.   I     .O        .         .         .         .         .         .         .         .         S         .         .
  11634 275.   I     .O        .         .         .         .         .         .         .         .        S.         .         .
  11635 276.   I     .O        .         .         .         .         .         .         .         .        S.         .         .
  11636 277.   I     .O        .         .         .         .         .         .         .         .        S.         .         .
  11637 278.   I     O         .         .         .         .         .         .         .         .       S .         .         .
  11638 279.   I     O         .         .         .         .         .         .         .         .       S .         .         .
  11639 280.   I     O         .         .         .         .         .         .         .         .       S .         .         .
  11640 281. . I . . O . . . . . . . . . . . . . . . . . . . . . . . . . . . . . . . . . . . . . . . . . . .S. . . . . . . . . . .
  11641 282.   I    O.         .         .         .         .         .         .         .         .      S  .         .         .
  11642 283.   I    O.         .         .         .         .         .         .         .         .      S  .         .         .
  11643 284.   I    O.         .         .         .         .         .         .         .         .     S   .         .         .
  11644 285.   I    O.         .         .         .         .         .         .         .         .     S   .         .         .
  11645 286.   I   O .         .         .         .         .         .         .         .         .     S   .         .         .
  11646 287.  I    O .         .         .         .         .         .         .         .         .     S   .         .         .
  11647 288.  I    O .         .         .         .         .         .         .         .         .    S    .         .         .
  11648 289.  I    O .         .         .         .         .         .         .         .         .    S    .         .         .
  11649 290.  I    O .         .         .         .         .         .         .         .         .    S    .         .         .
  11650 291. .I. .O. . . . . . . . . . . . . . . . . . . . . . . . . . . . . . . . . . . . . . . . . . .S. . . . . . . . . . . .
  11651 292.  I   O  .         .         .         .         .         .         .         .         .   S     .         .         .
  11652 293.  I   O  .         .         .         .         .         .         .         .         .   S     .         .         .
  11653 294.  I   O  .         .         .         .         .         .         .         .         .   S     .         .         .
  11654 295.  I   O  .         .         .         .         .         .         .         .         .   S     .         .         .
  11655 296.  I   O  .         .         .         .         .         .         .         .         .  S      .         .         .
  11656 297.  I   O  .         .         .         .         .         .         .         .         .  S      .         .         .
  11657 298.  I  O   .         .         .         .         .         .         .         .         .  S      .         .         .
  11658 299.  I  O   .         .         .         .         .         .         .         .         .  S      .         .         .
  11659 300.--I--O---.---------.---------.---------.---------.---------.---------.---------.---------.--S------.---------.---------.
1
1
                                                           RUNOFF SUMMARY
                                                   FLOW IN CUBIC FEET PER SECOND
                                                TIME IN HOURS,  AREA IN SQUARE MILES

                                       PEAK   TIME OF     AVERAGE FLOW FOR MAXIMUM PERIOD      BASIN     MAXIMUM     TIME OF
          OPERATION       STATION      FLOW     PEAK                                            AREA      STAGE     MAX STAGE
+                                                          6-HOUR     24-HOUR     72-HOUR

          HYDROGRAPH AT
+                        SWV385_1        20.    4.08           2.          2.          2.        .01

          HYDROGRAPH AT
+                        SWV367_1        79.    4.10           9.          9.          9.        .05

          2 COMBINED AT
+                           VAULT        98.    4.10          11.         11.         11.        .06
```

```
          ROUTED TO
+                          VAULT        46.    4.22           8.          8.          8.        .06
+                                                                                                         10.96        4.22


 *** NORMAL END OF HEC-1 ***
```

```
1*****************************************                                                   ****************************************
 *                                       *                                                   *                                      *
 *   FLOOD HYDROGRAPH PACKAGE  (HEC-1)   *                                                   *    U.S. ARMY CORPS OF ENGINEERS      *
 *               JUN   1998              *                                                   *    HYDROLOGIC ENGINEERING CENTER     *
 *            VERSION 4.1                *                                                   *          609 SECOND STREET           *
 *                                       *                                                   *       DAVIS, CALIFORNIA 95616        *
 *  RUN DATE   17FEB22  TIME  16:29:21   *                                                   *           (916) 756-1104             *
 *                                       *                                                   *                                      *
 *****************************************                                                   ****************************************
```

Detention Routing
Calculation for Basin 1400

```
                                                  X     X  XXXXXXX   XXXXX           X
                                                  X     X  X        X     X         XX
                                                  X     X  X        X                X
                                                  XXXXXXX  XXXX     X        XXXXX   X
                                                  X     X  X        X                X
                                                  X     X  X        X     X          X
                                                  X     X  XXXXXXX   XXXXX          XXX




            THIS PROGRAM REPLACES ALL PREVIOUS VERSIONS OF HEC-1 KNOWN AS HEC1 (JAN 73), HEC1GS, HEC1DB, AND HEC1KW.

            THE DEFINITIONS OF VARIABLES -RTIMP- AND -RTIOR- HAVE CHANGED FROM THOSE USED WITH THE 1973-STYLE INPUT STRUCTURE.
            THE DEFINITION OF -AMSKK- ON RM-CARD WAS CHANGED WITH REVISIONS DATED 28 SEP 81. THIS IS THE FORTRAN77 VERSION
            NEW OPTIONS: DAMBREAK OUTFLOW SUBMERGENCE , SINGLE EVENT DAMAGE CALCULATION, DSS:WRITE STAGE FREQUENCY,
            DSS:READ TIME SERIES AT DESIRED CALCULATION INTERVAL   LOSS RATE:GREEN AND AMPT INFILTRATION
            KINEMATIC WAVE: NEW FINITE DIFFERENCE ALGORITHM


1                                                       HEC-1 INPUT                                            PAGE  1

           LINE           ID.......1.......2.......3.......4.......5.......6.......7.......8.......9......10

 *** FREE ***
                          *DIAGRAM
              1           ID   SOUTH OTAY VTM; J-15013-C
              2           ID   DETENTION ANALYSIS FOR BASIN 3
              3           ID   FEBURARY 16, 2022 - FILE NAME: SWV3HD00.hc1
              4           IT       1 01JAN90    1200     300
              5           IO       5       0
                          *

              6           KKSWV1495_100YR.hc1
              7           KM   RUN DATE   2/17/2022
              8           KM   RATIONAL METHOD HYDROGRAPH PROGRAM
              9           KM   COPYRIGHT 1992, 2014, RICK ENGINEERING COMPANY
             10           KM   6HR RAINFALL IS 2 INCHES
             11           KM   RATIONAL METHOD RUNOFF COEFFICIENT IS 0.8
             12           KM   RATIONAL METHOD TIME OF CONCENTRATION IS 28 MIN.
             13           KM   FOR THIS DATA TO RUN PROPERLY THIS IT CARD MUST BE ADDED TO YOUR HEC-1
             14           KM   IT 2 01JAN90 1200 200
             15           BA  0.0778
             16           IN      28 01JAN90    1134
             17           QI       0       0     5.1     5.4     6.2     6.7     8.2     9.3    13.7    30.3
             18           QI   58.11      11     7.3     5.7       0       0       0       0       0       0
             19           QI       0       0       0       0       0
                          *

             20           KK     BF14
             21           KO       2       2       0       0      21
             22           KM   BIOFILTRATION BASIN 1400
             23           RS       1    ELEV       1
             24           SV   0.285   0.467   0.658   0.757   0.859   0.962   1.068   1.177   1.288   1.401
             25           SV   1.517   1.635   1.756   1.879   2.005   2.133   2.264   2.398   2.534   2.674
             26           SQ   1.761   1.899   2.028   2.276   3.094   3.544   3.901   4.209   4.486   8.209
             27           SQ  14.789  23.225  28.795  33.257  38.689  44.721  48.872  59.689  76.496  97.167
             28           SE       0     0.5       1    1.25     1.5    1.75       2    2.25     2.5    2.75
             29           SE       3    3.25     3.5    3.75       4    4.25     4.5    4.75       5    5.25
                          *
             30           ZZ
1
                 SCHEMATIC DIAGRAM OF STREAM NETWORK
 INPUT
  LINE      (V) ROUTING          (--->) DIVERSION OR PUMP FLOW

   NO.      (.) CONNECTOR        (<---) RETURN OF DIVERTED OR PUMPED FLOW

     6    SWV1495_
                 V
```

```
               V
   20        BF14

 (***) RUNOFF ALSO COMPUTED AT THIS LOCATION
1*****************************************                                                  ***************************************
 *                                       *                                                  *                                     *
 *   FLOOD HYDROGRAPH PACKAGE  (HEC-1)   *                                                  *    U.S. ARMY CORPS OF ENGINEERS     *
 *               JUN   1998              *                                                  *    HYDROLOGIC ENGINEERING CENTER    *
 *            VERSION 4.1                *                                                  *          609 SECOND STREET          *
 *                                       *                                                  *       DAVIS, CALIFORNIA 95616       *
 *  RUN DATE   17FEB22  TIME  16:29:21   *                                                  *           (916) 756-1104            *
 *                                       *                                                  *                                     *
 *****************************************                                                  ***************************************




                          SOUTH OTAY VTM; J-15013-C
                          DETENTION ANALYSIS FOR BASIN 3
                          FEBURARY 16, 2022 - FILE NAME: SWV3HD00.hc1

    5 IO          OUTPUT CONTROL VARIABLES
                        IPRNT           5  PRINT CONTROL
                        IPLOT           0  PLOT CONTROL
                        QSCAL          0.  HYDROGRAPH PLOT SCALE

      IT          HYDROGRAPH TIME DATA
                         NMIN           1  MINUTES IN COMPUTATION INTERVAL
                        IDATE      1JAN90  STARTING DATE
                        ITIME        1200  STARTING TIME
                           NQ         300  NUMBER OF HYDROGRAPH ORDINATES
                       NDDATE      1JAN90  ENDING DATE
                       NDTIME        1659  ENDING TIME
                        ICENT          19  CENTURY MARK

                    COMPUTATION INTERVAL     .02 HOURS
                         TOTAL TIME BASE    4.98 HOURS

           ENGLISH UNITS
                DRAINAGE AREA         SQUARE MILES
                PRECIPITATION DEPTH   INCHES
                LENGTH, ELEVATION     FEET
                FLOW                  CUBIC FEET PER SECOND
                STORAGE VOLUME        ACRE-FEET
                SURFACE AREA          ACRES
                TEMPERATURE           DEGREES FAHRENHEIT



 *** *** *** *** *** *** *** *** *** *** *** *** *** *** *** *** *** *** *** *** *** *** *** *** *** *** *** *** *** *** *** *** *** ***


             **************
             *            *
   20 KK     *      BF14  *
             *            *
             **************

   21 KO          OUTPUT CONTROL VARIABLES
                        IPRNT           2  PRINT CONTROL
                        IPLOT           2  PLOT CONTROL
                        QSCAL          0.  HYDROGRAPH PLOT SCALE
                        IPNCH           0  PUNCH COMPUTED HYDROGRAPH
                         IOUT          21  SAVE HYDROGRAPH ON THIS UNIT
                        ISAV1           1  FIRST ORDINATE PUNCHED OR SAVED
                        ISAV2         300  LAST ORDINATE PUNCHED OR SAVED
                       TIMINT        .017  TIME INTERVAL IN HOURS

                          BIOFILTRATION BASIN 1400

                HYDROGRAPH ROUTING DATA

   23 RS          STORAGE ROUTING
                        NSTPS           1  NUMBER OF SUBREACHES
                         ITYP        ELEV  TYPE OF INITIAL CONDITION
                       RSVRIC        1.00  INITIAL CONDITION
                            X         .00 WORKING R AND D COEFFICIENT

   24 SV            STORAGE          .3         .5         .7         .8         .9        1.0        1.1        1.2        1.3        1.4
                                    1.5        1.6        1.8        1.9        2.0        2.1        2.3        2.4        2.5        2.7

   26 SQ          DISCHARGE          2.         2.         2.         2.         3.         4.         4.         4.         4.         8.
                                    15.        23.        29.        33.        39.        45.        49.        60.        76.        97.
```

```
  28 SE          ELEVATION          .00       .50      1.00      1.25      1.50      1.75      2.00      2.25      2.50      2.75
                                   3.00      3.25      3.50      3.75      4.00      4.25      4.50      4.75      5.00      5.25

                                                                      ***

*********************************************************************************************************************************

                                                     HYDROGRAPH AT STATION     BF14

*********************************************************************************************************************************
                                              *                                              *
 DA MON HRMN ORD   OUTFLOW   STORAGE    STAGE * DA MON HRMN ORD   OUTFLOW   STORAGE    STAGE * DA MON HRMN ORD   OUTFLOW   STORAGE    STAGE
                                              *                                              *
  1 JAN 1200   1        2.        .7      1.0 *  1 JAN 1340 101        4.       1.0      1.7 *  1 JAN 1520 201       11.       1.5      2.9
  1 JAN 1201   2        2.        .7      1.0 *  1 JAN 1341 102        4.       1.0      1.7 *  1 JAN 1521 202       12.       1.5      2.9
  1 JAN 1202   3        2.        .7      1.0 *  1 JAN 1342 103        4.       1.0      1.8 *  1 JAN 1522 203       12.       1.5      2.9
  1 JAN 1203   4        2.        .6      1.0 *  1 JAN 1343 104        4.       1.0      1.8 *  1 JAN 1523 204       12.       1.5      2.9
  1 JAN 1204   5        2.        .6      1.0 *  1 JAN 1344 105        4.       1.0      1.8 *  1 JAN 1524 205       13.       1.5      2.9
  1 JAN 1205   6        2.        .6      1.0 *  1 JAN 1345 106        4.       1.0      1.8 *  1 JAN 1525 206       13.       1.5      2.9
  1 JAN 1206   7        2.        .6      1.0 *  1 JAN 1346 107        4.       1.0      1.8 *  1 JAN 1526 207       13.       1.5      3.0
  1 JAN 1207   8        2.        .6      1.0 *  1 JAN 1347 108        4.       1.0      1.8 *  1 JAN 1527 208       14.       1.5      3.0
  1 JAN 1208   9        2.        .6      1.0 *  1 JAN 1348 109        4.       1.0      1.8 *  1 JAN 1528 209       14.       1.5      3.0
  1 JAN 1209  10        2.        .6      1.0 *  1 JAN 1349 110        4.       1.0      1.8 *  1 JAN 1529 210       15.       1.5      3.0
  1 JAN 1210  11        2.        .6       .9 *  1 JAN 1350 111        4.       1.0      1.8 *  1 JAN 1530 211       15.       1.5      3.0
  1 JAN 1211  12        2.        .6       .9 *  1 JAN 1351 112        4.       1.0      1.8 *  1 JAN 1531 212       16.       1.5      3.0
  1 JAN 1212  13        2.        .6       .9 *  1 JAN 1352 113        4.       1.0      1.9 *  1 JAN 1532 213       16.       1.5      3.0
  1 JAN 1213  14        2.        .6       .9 *  1 JAN 1353 114        4.       1.0      1.9 *  1 JAN 1533 214       17.       1.5      3.1
  1 JAN 1214  15        2.        .6       .9 *  1 JAN 1354 115        4.       1.0      1.9 *  1 JAN 1534 215       17.       1.6      3.1
  1 JAN 1215  16        2.        .6       .9 *  1 JAN 1355 116        4.       1.0      1.9 *  1 JAN 1535 216       18.       1.6      3.1
  1 JAN 1216  17        2.        .6       .9 *  1 JAN 1356 117        4.       1.0      1.9 *  1 JAN 1536 217       19.       1.6      3.1
  1 JAN 1217  18        2.        .6      1.0 *  1 JAN 1357 118        4.       1.0      1.9 *  1 JAN 1537 218       19.       1.6      3.1
  1 JAN 1218  19        2.        .6      1.0 *  1 JAN 1358 119        4.       1.0      1.9 *  1 JAN 1538 219       20.       1.6      3.1
  1 JAN 1219  20        2.        .6      1.0 *  1 JAN 1359 120        4.       1.0      1.9 *  1 JAN 1539 220       20.       1.6      3.2
  1 JAN 1220  21        2.        .6      1.0 *  1 JAN 1400 121        4.       1.0      1.9 *  1 JAN 1540 221       21.       1.6      3.2
  1 JAN 1221  22        2.        .6      1.0 *  1 JAN 1401 122        4.       1.0      1.9 *  1 JAN 1541 222       21.       1.6      3.2
  1 JAN 1222  23        2.        .6      1.0 *  1 JAN 1402 123        4.       1.0      2.0 *  1 JAN 1542 223       22.       1.6      3.2
  1 JAN 1223  24        2.        .6      1.0 *  1 JAN 1403 124        4.       1.1      2.0 *  1 JAN 1543 224       23.       1.6      3.2
  1 JAN 1224  25        2.        .7      1.0 *  1 JAN 1404 125        4.       1.1      2.0 *  1 JAN 1544 225       23.       1.6      3.2
  1 JAN 1225  26        2.        .7      1.0 *  1 JAN 1405 126        4.       1.1      2.0 *  1 JAN 1545 226       24.       1.6      3.3
  1 JAN 1226  27        2.        .7      1.0 *  1 JAN 1406 127        4.       1.1      2.0 *  1 JAN 1546 227       24.       1.7      3.3
  1 JAN 1227  28        2.        .7      1.0 *  1 JAN 1407 128        4.       1.1      2.0 *  1 JAN 1547 228       24.       1.7      3.3
  1 JAN 1228  29        2.        .7      1.0 *  1 JAN 1408 129        4.       1.1      2.0 *  1 JAN 1548 229       25.       1.7      3.3
  1 JAN 1229  30        2.        .7      1.0 *  1 JAN 1409 130        4.       1.1      2.0 *  1 JAN 1549 230       25.       1.7      3.3
  1 JAN 1230  31        2.        .7      1.0 *  1 JAN 1410 131        4.       1.1      2.0 *  1 JAN 1550 231       26.       1.7      3.4
  1 JAN 1231  32        2.        .7      1.0 *  1 JAN 1411 132        4.       1.1      2.1 *  1 JAN 1551 232       26.       1.7      3.4
  1 JAN 1232  33        2.        .7      1.1 *  1 JAN 1412 133        4.       1.1      2.1 *  1 JAN 1552 233       27.       1.7      3.4
  1 JAN 1233  34        2.        .7      1.1 *  1 JAN 1413 134        4.       1.1      2.1 *  1 JAN 1553 234       28.       1.7      3.4
  1 JAN 1234  35        2.        .7      1.1 *  1 JAN 1414 135        4.       1.1      2.1 *  1 JAN 1554 235       28.       1.7      3.5
  1 JAN 1235  36        2.        .7      1.1 *  1 JAN 1415 136        4.       1.1      2.1 *  1 JAN 1555 236       29.       1.8      3.5
  1 JAN 1236  37        2.        .7      1.1 *  1 JAN 1416 137        4.       1.1      2.1 *  1 JAN 1556 237       29.       1.8      3.5
  1 JAN 1237  38        2.        .7      1.1 *  1 JAN 1417 138        4.       1.1      2.1 *  1 JAN 1557 238       30.       1.8      3.6
  1 JAN 1238  39        2.        .7      1.1 *  1 JAN 1418 139        4.       1.1      2.1 *  1 JAN 1558 239       31.       1.8      3.6
  1 JAN 1239  40        2.        .7      1.1 *  1 JAN 1419 140        4.       1.1      2.1 *  1 JAN 1559 240       31.       1.8      3.6
  1 JAN 1240  41        2.        .7      1.1 *  1 JAN 1420 141        4.       1.1      2.2 *  1 JAN 1600 241       32.       1.8      3.7
  1 JAN 1241  42        2.        .7      1.2 *  1 JAN 1421 142        4.       1.1      2.2 *  1 JAN 1601 242       32.       1.9      3.7
  1 JAN 1242  43        2.        .7      1.2 *  1 JAN 1422 143        4.       1.1      2.2 *  1 JAN 1602 243       33.       1.9      3.7
  1 JAN 1243  44        2.        .7      1.2 *  1 JAN 1423 144        4.       1.2      2.2 *  1 JAN 1603 244       34.       1.9      3.8
  1 JAN 1244  45        2.        .7      1.2 *  1 JAN 1424 145        4.       1.2      2.2 *  1 JAN 1604 245       35.       1.9      3.8
  1 JAN 1245  46        2.        .7      1.2 *  1 JAN 1425 146        4.       1.2      2.2 *  1 JAN 1605 246       35.       1.9      3.8
  1 JAN 1246  47        2.        .7      1.2 *  1 JAN 1426 147        4.       1.2      2.2 *  1 JAN 1606 247       36.       1.9      3.9
  1 JAN 1247  48        2.        .7      1.2 *  1 JAN 1427 148        4.       1.2      2.3 *  1 JAN 1607 248       37.       2.0      3.9
  1 JAN 1248  49        2.        .7      1.2 *  1 JAN 1428 149        4.       1.2      2.3 *  1 JAN 1608 249       38.       2.0      4.0
  1 JAN 1249  50        2.        .8      1.2 *  1 JAN 1429 150        4.       1.2      2.3 *  1 JAN 1609 250       39.       2.0      4.0
  1 JAN 1250  51        2.        .8      1.2 *  1 JAN 1430 151        4.       1.2      2.3 *  1 JAN 1610 251       40.       2.0      4.0
  1 JAN 1251  52        2.        .8      1.3 *  1 JAN 1431 152        4.       1.2      2.3 *  1 JAN 1611 252       41.       2.0      4.1
  1 JAN 1252  53        2.        .8      1.3 *  1 JAN 1432 153        4.       1.2      2.3 *  1 JAN 1612 253       42.       2.1      4.1
  1 JAN 1253  54        2.        .8      1.3 *  1 JAN 1433 154        4.       1.2      2.3 *  1 JAN 1613 254       42.       2.1      4.2
  1 JAN 1254  55        2.        .8      1.3 *  1 JAN 1434 155        4.       1.2      2.3 *  1 JAN 1614 255       43.       2.1      4.2
  1 JAN 1255  56        2.        .8      1.3 *  1 JAN 1435 156        4.       1.2      2.4 *  1 JAN 1615 256       44.       2.1      4.2
  1 JAN 1256  57        2.        .8      1.3 *  1 JAN 1436 157        4.       1.2      2.4 *  1 JAN 1616 257       45.       2.1      4.3
  1 JAN 1257  58        3.        .8      1.3 *  1 JAN 1437 158        4.       1.2      2.4 *  1 JAN 1617 258       45.       2.2      4.3
  1 JAN 1258  59        3.        .8      1.3 *  1 JAN 1438 159        4.       1.2      2.4 *  1 JAN 1618 259       46.       2.2      4.3
  1 JAN 1259  60        3.        .8      1.3 *  1 JAN 1439 160        4.       1.2      2.4 *  1 JAN 1619 260       46.       2.2      4.3
  1 JAN 1300  61        3.        .8      1.3 *  1 JAN 1440 161        4.       1.3      2.4 *  1 JAN 1620 261       46.       2.2      4.3
  1 JAN 1301  62        3.        .8      1.4 *  1 JAN 1441 162        4.       1.3      2.4 *  1 JAN 1621 262       46.       2.2      4.3
  1 JAN 1302  63        3.        .8      1.4 *  1 JAN 1442 163        4.       1.3      2.5 *  1 JAN 1622 263       46.       2.2      4.3
  1 JAN 1303  64        3.        .8      1.4 *  1 JAN 1443 164        4.       1.3      2.5 *  1 JAN 1623 264       46.       2.2      4.3
  1 JAN 1304  65        3.        .8      1.4 *  1 JAN 1444 165        4.       1.3      2.5 *  1 JAN 1624 265       46.       2.2      4.3
  1 JAN 1305  66        3.        .8      1.4 *  1 JAN 1445 166        4.       1.3      2.5 *  1 JAN 1625 266       45.       2.2      4.3
  1 JAN 1306  67        3.        .8      1.4 *  1 JAN 1446 167        5.       1.3      2.5 *  1 JAN 1626 267       45.       2.1      4.3
  1 JAN 1307  68        3.        .8      1.4 *  1 JAN 1447 168        5.       1.3      2.5 *  1 JAN 1627 268       45.       2.1      4.3
  1 JAN 1308  69        3.        .8      1.4 *  1 JAN 1448 169        5.       1.3      2.5 *  1 JAN 1628 269       44.       2.1      4.2
  1 JAN 1309  70        3.        .8      1.4 *  1 JAN 1449 170        5.       1.3      2.5 *  1 JAN 1629 270       44.       2.1      4.2
```

```
   1 JAN 1310  71       3.       .8     1.4 *  1 JAN 1450 171       5.      1.3     2.6 *  1 JAN 1630 271      43.      2.1     4.2
   1 JAN 1311  72       3.       .8     1.5 *  1 JAN 1451 172       6.      1.3     2.6 *  1 JAN 1631 272      42.      2.1     4.1
   1 JAN 1312  73       3.       .8     1.5 *  1 JAN 1452 173       6.      1.3     2.6 *  1 JAN 1632 273      41.      2.1     4.1
   1 JAN 1313  74       3.       .8     1.5 *  1 JAN 1453 174       6.      1.3     2.6 *  1 JAN 1633 274      40.      2.0     4.1
   1 JAN 1314  75       3.       .9     1.5 *  1 JAN 1454 175       6.      1.3     2.6 *  1 JAN 1634 275      39.      2.0     4.0
   1 JAN 1315  76       3.       .9     1.5 *  1 JAN 1455 176       6.      1.3     2.6 *  1 JAN 1635 276      38.      2.0     4.0
   1 JAN 1316  77       3.       .9     1.5 *  1 JAN 1456 177       6.      1.3     2.6 *  1 JAN 1636 277      38.      2.0     3.9
   1 JAN 1317  78       3.       .9     1.5 *  1 JAN 1457 178       7.      1.4     2.6 *  1 JAN 1637 278      37.      2.0     3.9
   1 JAN 1318  79       3.       .9     1.5 *  1 JAN 1458 179       7.      1.4     2.7 *  1 JAN 1638 279      35.      1.9     3.9
   1 JAN 1319  80       3.       .9     1.5 *  1 JAN 1459 180       7.      1.4     2.7 *  1 JAN 1639 280      34.      1.9     3.8
   1 JAN 1320  81       3.       .9     1.5 *  1 JAN 1500 181       7.      1.4     2.7 *  1 JAN 1640 281      33.      1.9     3.8
   1 JAN 1321  82       3.       .9     1.5 *  1 JAN 1501 182       7.      1.4     2.7 *  1 JAN 1641 282      32.      1.9     3.7
   1 JAN 1322  83       3.       .9     1.6 *  1 JAN 1502 183       7.      1.4     2.7 *  1 JAN 1642 283      31.      1.8     3.6
   1 JAN 1323  84       3.       .9     1.6 *  1 JAN 1503 184       8.      1.4     2.7 *  1 JAN 1643 284      30.      1.8     3.6
   1 JAN 1324  85       3.       .9     1.6 *  1 JAN 1504 185       8.      1.4     2.7 *  1 JAN 1644 285      29.      1.8     3.5
   1 JAN 1325  86       3.       .9     1.6 *  1 JAN 1505 186       8.      1.4     2.7 *  1 JAN 1645 286      28.      1.7     3.5
   1 JAN 1326  87       3.       .9     1.6 *  1 JAN 1506 187       8.      1.4     2.7 *  1 JAN 1646 287      27.      1.7     3.4
   1 JAN 1327  88       3.       .9     1.6 *  1 JAN 1507 188       8.      1.4     2.8 *  1 JAN 1647 288      26.      1.7     3.4
   1 JAN 1328  89       3.       .9     1.6 *  1 JAN 1508 189       9.      1.4     2.8 *  1 JAN 1648 289      25.      1.7     3.3
   1 JAN 1329  90       3.       .9     1.6 *  1 JAN 1509 190       9.      1.4     2.8 *  1 JAN 1649 290      24.      1.7     3.3
   1 JAN 1330  91       3.       .9     1.6 *  1 JAN 1510 191       9.      1.4     2.8 *  1 JAN 1650 291      23.      1.6     3.3
   1 JAN 1331  92       3.       .9     1.6 *  1 JAN 1511 192       9.      1.4     2.8 *  1 JAN 1651 292      22.      1.6     3.2
   1 JAN 1332  93       3.       .9     1.7 *  1 JAN 1512 193      10.      1.4     2.8 *  1 JAN 1652 293      21.      1.6     3.2
   1 JAN 1333  94       3.       .9     1.7 *  1 JAN 1513 194      10.      1.4     2.8 *  1 JAN 1653 294      20.      1.6     3.2
   1 JAN 1334  95       3.       .9     1.7 *  1 JAN 1514 195      10.      1.4     2.8 *  1 JAN 1654 295      19.      1.6     3.1
   1 JAN 1335  96       3.       .9     1.7 *  1 JAN 1515 196      10.      1.4     2.8 *  1 JAN 1655 296      18.      1.6     3.1
   1 JAN 1336  97       3.       .9     1.7 *  1 JAN 1516 197      11.      1.4     2.8 *  1 JAN 1656 297      17.      1.6     3.1
   1 JAN 1337  98       3.       .9     1.7 *  1 JAN 1517 198      11.      1.4     2.8 *  1 JAN 1657 298      17.      1.5     3.1
   1 JAN 1338  99       3.       .9     1.7 *  1 JAN 1518 199      11.      1.5     2.9 *  1 JAN 1658 299      16.      1.5     3.0
   1 JAN 1339 100       3.      1.0     1.7 *  1 JAN 1519 200      11.      1.5     2.9 *  1 JAN 1659 300      15.      1.5     3.0
                                            *                                           *
 ***********************************************************************************************************************************

  PEAK FLOW     TIME                          MAXIMUM AVERAGE FLOW
                                      6-HR       24-HR       72-HR      4.98-HR
+   (CFS)       (HR)
                           (CFS)
+      46.      4.35                   12.         12.         12.          12.
                        (INCHES)     1.228       1.228       1.228        1.228
                         (AC-FT)        5.          5.          5.           5.

 PEAK STORAGE   TIME                         MAXIMUM AVERAGE STORAGE
                                      6-HR       24-HR       72-HR      4.98-HR
+  (AC-FT)      (HR)
        2.      4.35                    1.          1.          1.           1.

  PEAK STAGE    TIME                          MAXIMUM AVERAGE STAGE
                                      6-HR       24-HR       72-HR      4.98-HR
+   (FEET)      (HR)
      4.33      4.35                  2.38        2.38        2.38         2.38

                         CUMULATIVE AREA =     .08 SQ MI

1                                                          STATION     BF14

                          (I) INFLOW,   (O) OUTFLOW
          0.       10.       20.       30.       40.       50.       60.        0.        0.        0.        0.        0.        0.
                                                                                 (S) STORAGE
          .0        .0        .0        .0        .0        .0        .4        .8       1.2       1.6       2.0       2.4        .0
 DAHRMN PER
  11200    1I-O-------.---------.---------.---------.---------.---------.-----S---.---------.---------.---------.---------.---------.
  11201    2I O       .         .         .         .         .         .     S   .         .         .         .         .         .
  11202    3I O       .         .         .         .         .         .     S   .         .         .         .         .         .
  11203    4I O       .         .         .         .         .         .     S   .         .         .         .         .         .
  11204    5I O       .         .         .         .         .         .     S   .         .         .         .         .         .
  11205    6.IO       .         .         .         .         .         .     S   .         .         .         .         .         .
  11206    7.IO       .         .         .         .         .         .     S   .         .         .         .         .         .
  11207    8.IO       .         .         .         .         .         .     S   .         .         .         .         .         .
  11208    9.IO       .         .         .         .         .         .     S   .         .         .         .         .         .
  11209   10.IO       .         .         .         .         .         .     S   .         .         .         .         .         .
  11210   11.IO . . . . . . . . . . . . . . . . . . . . . . . . . . . . . . . S . . . . . . . . . . . . . . . . . . . . . . . . . . .
  11211   12. I       .         .         .         .         .         .     S   .         .         .         .         .         .
  11212   13. I       .         .         .         .         .         .     S   .         .         .         .         .         .
  11213   14. I       .         .         .         .         .         .     S   .         .         .         .         .         .
  11214   15. I       .         .         .         .         .         .     S   .         .         .         .         .         .
  11215   16. I       .         .         .         .         .         .     S   .         .         .         .         .         .
  11216   17. OI      .         .         .         .         .         .     S   .         .         .         .         .         .
  11217   18. OI      .         .         .         .         .         .     S   .         .         .         .         .         .
  11218   19. OI      .         .         .         .         .         .     S   .         .         .         .         .         .
  11219   20. OI      .         .         .         .         .         .     S   .         .         .         .         .         .
  11220   21. OI. . . . . . . . . . . . . . . . . . . . . . . . . . . . . . . S . . . . . . . . . . . . . . . . . . . . . . . . . . .
  11221   22. OI      .         .         .         .         .         .     S   .         .         .         .         .         .
  11222   23. O I     .         .         .         .         .         .     S   .         .         .         .         .         .
  11223   24. O I     .         .         .         .         .         .     S   .         .         .         .         .         .
```

```
11224  25. O I     .         .         .         .         .         .     S   .         .         .         .         .         .
11225  26. O I     .         .         .         .         .         .     S   .         .         .         .         .         .
11226  27. O I     .         .         .         .         .         .     S   .         .         .         .         .         .
11227  28. O  I    .         .         .         .         .         .      S  .         .         .         .         .         .
11228  29. O  I    .         .         .         .         .         .      S  .         .         .         .         .         .
11229  30. O  I    .         .         .         .         .         .      S  .         .         .         .         .         .
11230  31. O .I. . . . . . . . . . . . . . . . . . . . . . . . . . . . . .S. . . . . . . . . . . . . . . . . . . . . . . . . .
11231  32. O  I    .         .         .         .         .         .      S  .         .         .         .         .         .
11232  33. O  I    .         .         .         .         .         .      S  .         .         .         .         .         .
11233  34. O  I    .         .         .         .         .         .      S  .         .         .         .         .         .
11234  35. O  I    .         .         .         .         .         .      S  .         .         .         .         .         .
11235  36. O  I    .         .         .         .         .         .      S  .         .         .         .         .         .
11236  37. O  I    .         .         .         .         .         .      S  .         .         .         .         .         .
11237  38. O  I    .         .         .         .         .         .       S .         .         .         .         .         .
11238  39. O  I    .         .         .         .         .         .       S .         .         .         .         .         .
11239  40. O  I    .         .         .         .         .         .       S .         .         .         .         .         .
11240  41. O .I. . . . . . . . . . . . . . . . . . . . . . . . . . . . . . S . . . . . . . . . . . . . . . . . . . . . . . . . .
11241  42. O  I    .         .         .         .         .         .       S .         .         .         .         .         .
11242  43. O  I    .         .         .         .         .         .       S .         .         .         .         .         .
11243  44. O  I    .         .         .         .         .         .       S .         .         .         .         .         .
11244  45. O  I    .         .         .         .         .         .       S .         .         .         .         .         .
11245  46. O  I    .         .         .         .         .         .       S .         .         .         .         .         .
11246  47. O  I    .         .         .         .         .         .       S .         .         .         .         .         .
11247  48. O  I    .         .         .         .         .         .        S.         .         .         .         .         .
11248  49. O  I    .         .         .         .         .         .        S.         .         .         .         .         .
11249  50. O  I    .         .         .         .         .         .        S.         .         .         .         .         .
11250  51. O .I. . . . . . . . . . . . . . . . . . . . . . . . . . . . . . .S. . . . . . . . . . . . . . . . . . . . . . . . .
11251  52. O  I    .         .         .         .         .         .        S.         .         .         .         .         .
11252  53. O  I    .         .         .         .         .         .        S.         .         .         .         .         .
11253  54. O  I    .         .         .         .         .         .        S.         .         .         .         .         .
11254  55. O  I    .         .         .         .         .         .        S.         .         .         .         .         .
11255  56. O  I    .         .         .         .         .         .        S.         .         .         .         .         .
11256  57. O  I    .         .         .         .         .         .         S         .         .         .         .         .
11257  58.  O I    .         .         .         .         .         .         S         .         .         .         .         .
11258  59.  O I    .         .         .         .         .         .         S         .         .         .         .         .
11259  60.  O I    .         .         .         .         .         .         S         .         .         .         .         .
11300  61. .O.I. . . . . . . . . . . . . . . . . . . . . . . . . . . . . . . S . . . . . . . . . . . . . . . . . . . . . . . . .
11301  62.  O I    .         .         .         .         .         .         S         .         .         .         .         .
11302  63.  O  I   .         .         .         .         .         .         S         .         .         .         .         .
11303  64.  O  I   .         .         .         .         .         .         S         .         .         .         .         .
11304  65.  O  I   .         .         .         .         .         .         S         .         .         .         .         .
11305  66.  O  I   .         .         .         .         .         .         S         .         .         .         .         .
11306  67.  O  I   .         .         .         .         .         .         .S        .         .         .         .         .
11307  68.  O  I   .         .         .         .         .         .         .S        .         .         .         .         .
11308  69.  O  I   .         .         .         .         .         .         .S        .         .         .         .         .
11309  70.  O  I   .         .         .         .         .         .         .S        .         .         .         .         .
11310  71. .O. I . . . . . . . . . . . . . . . . . . . . . . . . . . . . . . . .S. . . . . . . . . . . . . . . . . . . . . . . .
11311  72.  O  I   .         .         .         .         .         .         .S        .         .         .         .         .
11312  73.  O  I   .         .         .         .         .         .         .S        .         .         .         .         .
11313  74.  O  I   .         .         .         .         .         .         .S        .         .         .         .         .
11314  75.  O  I   .         .         .         .         .         .         .S        .         .         .         .         .
11315  76.  O  I   .         .         .         .         .         .         .S        .         .         .         .         .
11316  77.  O  I   .         .         .         .         .         .         .S        .         .         .         .         .
11317  78.  O  I   .         .         .         .         .         .         . S       .         .         .         .         .
11318  79.  O  I   .         .         .         .         .         .         . S       .         .         .         .         .
11319  80.  O  I   .         .         .         .         .         .         . S       .         .         .         .         .
11320  81. .O. I . . . . . . . . . . . . . . . . . . . . . . . . . . . . . . . . S . . . . . . . . . . . . . . . . . . . . . . . .
11321  82.  O  I   .         .         .         .         .         .         . S       .         .         .         .         .
11322  83.  O  I   .         .         .         .         .         .         . S       .         .         .         .         .
11323  84.  O  I   .         .         .         .         .         .         . S       .         .         .         .         .
11324  85.  O  I   .         .         .         .         .         .         . S       .         .         .         .         .
11325  86.  O  I   .         .         .         .         .         .         . S       .         .         .         .         .
11326  87.  O  I   .         .         .         .         .         .         . S       .         .         .         .         .
11327  88.  O  I   .         .         .         .         .         .         .  S      .         .         .         .         .
11328  89.  O  I   .         .         .         .         .         .         .  S      .         .         .         .         .
11329  90.  O  I   .         .         .         .         .         .         .  S      .         .         .         .         .
11330  91. .O. I . . . . . . . . . . . . . . . . . . . . . . . . . . . . . . . . .S. . . . . . . . . . . . . . . . . . . . . . .
11331  92.  O  I   .         .         .         .         .         .         .  S      .         .         .         .         .
11332  93.  O  I   .         .         .         .         .         .         .  S      .         .         .         .         .
11333  94.  O  I   .         .         .         .         .         .         .  S      .         .         .         .         .
11334  95.  O  I   .         .         .         .         .         .         .  S      .         .         .         .         .
11335  96.  O  I   .         .         .         .         .         .         .  S      .         .         .         .         .
11336  97.  O  I   .         .         .         .         .         .         .  S      .         .         .         .         .
11337  98.  O  I   .         .         .         .         .         .         .   S     .         .         .         .         .
11338  99.  O  I   .         .         .         .         .         .         .   S     .         .         .         .         .
11339 100.  O  I   .         .         .         .         .         .         .   S     .         .         .         .         .
11340 101. . O I . . . . . . . . . . . . . . . . . . . . . . . . . . . . . . . . . S . . . . . . . . . . . . . . . . . . . . . . .
11341 102.   O I   .         .         .         .         .         .         .   S     .         .         .         .         .
11342 103.   O I   .         .         .         .         .         .         .   S     .         .         .         .         .
11343 104.   O  I  .         .         .         .         .         .         .   S     .         .         .         .         .
11344 105.   O  I  .         .         .         .         .         .         .   S     .         .         .         .         .
11345 106.   O  I  .         .         .         .         .         .         .   S     .         .         .         .         .
11346 107.   O  I  .         .         .         .         .         .         .   S     .         .         .         .         .
11347 108.   O  I  .         .         .         .         .         .         .    S    .         .         .         .         .
```

```
11348 109.   O  I  .         .         .         .         .         .         .    S    .         .         .         .         .
11349 110.   O  I  .         .         .         .         .         .         .    S    .         .         .         .         .
11350 111. . O .I. . . . . . . . . . . . . . . . . . . . . . . . . . . . . . . . . .S. . . . . . . . . . . . . . . . . . . . . . .
11351 112.   O  I  .         .         .         .         .         .         .    S    .         .         .         .         .
11352 113.   O  I  .         .         .         .         .         .         .    S    .         .         .         .         .
11353 114.   O  I  .         .         .         .         .         .         .    S    .         .         .         .         .
11354 115.   O  I  .         .         .         .         .         .         .    S    .         .         .         .         .
11355 116.   O  I  .         .         .         .         .         .         .    S    .         .         .         .         .
11356 117.   O  I  .         .         .         .         .         .         .     S   .         .         .         .         .
11357 118.   O  I  .         .         .         .         .         .         .     S   .         .         .         .         .
11358 119.   O  I  .         .         .         .         .         .         .     S   .         .         .         .         .
11359 120.   O  I  .         .         .         .         .         .         .     S   .         .         .         .         .
11400 121. . O .I. . . . . . . . . . . . . . . . . . . . . . . . . . . . . . . . . . S . . . . . . . . . . . . . . . . . . . . . . .
11401 122.   O  I  .         .         .         .         .         .         .     S   .         .         .         .         .
11402 123.   O  I  .         .         .         .         .         .         .     S   .         .         .         .         .
11403 124.   O  I  .         .         .         .         .         .         .     S   .         .         .         .         .
11404 125.   O  I  .         .         .         .         .         .         .     S   .         .         .         .         .
11405 126.   O  I  .         .         .         .         .         .         .      S  .         .         .         .         .
11406 127.   O  I  .         .         .         .         .         .         .      S  .         .         .         .         .
11407 128.   O  I  .         .         .         .         .         .         .      S  .         .         .         .         .
11408 129.   O  I  .         .         .         .         .         .         .      S  .         .         .         .         .
11409 130.   O   I .         .         .         .         .         .         .      S  .         .         .         .         .
11410 131. . O . I . . . . . . . . . . . . . . . . . . . . . . . . . . . . . . . . . .S. . . . . . . . . . . . . . . . . . . . . .
11411 132.   O   I .         .         .         .         .         .         .      S  .         .         .         .         .
11412 133.   O   I .         .         .         .         .         .         .      S  .         .         .         .         .
11413 134.   O   I .         .         .         .         .         .         .       S .         .         .         .         .
11414 135.   O   I .         .         .         .         .         .         .       S .         .         .         .         .
11415 136.   O   I .         .         .         .         .         .         .       S .         .         .         .         .
11416 137.   O   I .         .         .         .         .         .         .       S .         .         .         .         .
11417 138.   O   I .         .         .         .         .         .         .       S .         .         .         .         .
11418 139.   O   I .         .         .         .         .         .         .       S .         .         .         .         .
11419 140.   O   I .         .         .         .         .         .         .       S .         .         .         .         .
11420 141. . O . I . . . . . . . . . . . . . . . . . . . . . . . . . . . . . . . . . . S . . . . . . . . . . . . . . . . . . . . . .
11421 142.   O   I .         .         .         .         .         .         .        S.         .         .         .         .
11422 143.   O   I .         .         .         .         .         .         .        S.         .         .         .         .
11423 144.   O   I .         .         .         .         .         .         .        S.         .         .         .         .
11424 145.   O   I .         .         .         .         .         .         .        S.         .         .         .         .
11425 146.   O   I .         .         .         .         .         .         .        S.         .         .         .         .
11426 147.   O   I .         .         .         .         .         .         .        S.         .         .         .         .
11427 148.   O   I .         .         .         .         .         .         .        S.         .         .         .         .
11428 149.   O   I .         .         .         .         .         .         .         S         .         .         .         .
11429 150.   O   I .         .         .         .         .         .         .         S         .         .         .         .
11430 151. . O . .I. . . . . . . . . . . . . . . . . . . . . . . . . . . . . . . . . . . S . . . . . . . . . . . . . . . . . . . .
11431 152.   O    I.         .         .         .         .         .         .         S         .         .         .         .
11432 153.   O    I.         .         .         .         .         .         .         S         .         .         .         .
11433 154.   O    I.         .         .         .         .         .         .         S         .         .         .         .
11434 155.   O    I.         .         .         .         .         .         .         S         .         .         .         .
11435 156.   O    I.         .         .         .         .         .         .         .S        .         .         .         .
11436 157.   O    I.         .         .         .         .         .         .         .S        .         .         .         .
11437 158.   O    I.         .         .         .         .         .         .         .S        .         .         .         .
11438 159.   O    I.         .         .         .         .         .         .         .S        .         .         .         .
11439 160.   O    I.         .         .         .         .         .         .         .S        .         .         .         .
11440 161. . O . .I. . . . . . . . . . . . . . . . . . . . . . . . . . . . . . . . . . . .S. . . . . . . . . . . . . . . . . . .
11441 162.   O    I.         .         .         .         .         .         .         . S       .         .         .         .
11442 163.   O    I.         .         .         .         .         .         .         . S       .         .         .         .
11443 164.   O    I.         .         .         .         .         .         .         . S       .         .         .         .
11444 165.   O    I.         .         .         .         .         .         .         . S       .         .         .         .
11445 166.   O    I.         .         .         .         .         .         .         . S       .         .         .         .
11446 167.    O   I.         .         .         .         .         .         .         . S       .         .         .         .
11447 168.    O   I.         .         .         .         .         .         .         . S       .         .         .         .
11448 169.    O   I.         .         .         .         .         .         .         .  S      .         .         .         .
11449 170.    O   I.         .         .         .         .         .         .         .  S      .         .         .         .
11450 171. . .O. .I. . . . . . . . . . . . . . . . . . . . . . . . . . . . . . . . . . . . .S. . . . . . . . . . . . . . . . . .
11451 172.     O  I.         .         .         .         .         .         .         .  S      .         .         .         .
11452 173.     O   I         .         .         .         .         .         .         .  S      .         .         .         .
11453 174.     O   I         .         .         .         .         .         .         .  S      .         .         .         .
11454 175.     O   I         .         .         .         .         .         .         .  S      .         .         .         .
11455 176.     O   I         .         .         .         .         .         .         .   S     .         .         .         .
11456 177.     O   I         .         .         .         .         .         .         .   S     .         .         .         .
11457 178.      O  I         .         .         .         .         .         .         .   S     .         .         .         .
11458 179.      O  .I        .         .         .         .         .         .         .   S     .         .         .         .
11459 180.      O  .I        .         .         .         .         .         .         .   S     .         .         .         .
11500 181. . . .O. .I. . . . . . . . . . . . . . . . . . . . . . . . . . . . . . . . . . . . . S . . . . . . . . . . . . . . . . .
11501 182.      O  .I        .         .         .         .         .         .         .   S     .         .         .         .
11502 183.      O  .I        .         .         .         .         .         .         .   S     .         .         .         .
11503 184.       O .I        .         .         .         .         .         .         .    S    .         .         .         .
11504 185.       O . I       .         .         .         .         .         .         .    S    .         .         .         .
11505 186.       O . I       .         .         .         .         .         .         .    S    .         .         .         .
11506 187.       O . I       .         .         .         .         .         .         .    S    .         .         .         .
11507 188.       O . I       .         .         .         .         .         .         .    S    .         .         .         .
11508 189.        O. I       .         .         .         .         .         .         .    S    .         .         .         .
11509 190.        O. I       .         .         .         .         .         .         .    S    .         .         .         .
11510 191. . . . .O. I . . . . . . . . . . . . . . . . . . . . . . . . . . . . . . . . . . . . .S. . . . . . . . . . . . . . . . .
11511 192.        O.  I      .         .         .         .         .         .         .     S   .         .         .         .
```

```
11512 193.         O  I      .         .         .         .         .         .         .     S   .         .         .         .
11513 194.         O  I      .         .         .         .         .         .         .     S   .         .         .         .
11514 195.         O  I      .         .         .         .         .         .         .     S   .         .         .         .
11515 196.         O  I      .         .         .         .         .         .         .     S   .         .         .         .
11516 197.         .O I      .         .         .         .         .         .         .     S   .         .         .         .
11517 198.         .O  I     .         .         .         .         .         .         .     S   .         .         .         .
11518 199.         .O  I     .         .         .         .         .         .         .     S   .         .         .         .
11519 200.         .O  I     .         .         .         .         .         .         .     S   .         .         .         .
11520 201. . . . . .O. .I. . . . . . . . . . . . . . . . . . . . . . . . . . . . . . . . . . . . . S . . . . . . . . . . . . . . . . .
11521 202.         . O  I    .         .         .         .         .         .         .      S  .         .         .         .
11522 203.         . O   I   .         .         .         .         .         .         .      S  .         .         .         .
11523 204.         . O    I  .         .         .         .         .         .         .      S  .         .         .         .
11524 205.         .  O   I  .         .         .         .         .         .         .      S  .         .         .         .
11525 206.         .  O    I .         .         .         .         .         .         .      S  .         .         .         .
11526 207.         .  O    I .         .         .         .         .         .         .      S  .         .         .         .
11527 208.         .   O    I.         .         .         .         .         .         .       S .         .         .         .
11528 209.         .   O     I         .         .         .         .         .         .       S .         .         .         .
11529 210.         .    O    I         .         .         .         .         .         .       S .         .         .         .
11530 211. . . . . . . .O. . .I. . . . . . . . . . . . . . . . . . . . . . . . . . . . . . . . . . . . S . . . . . . . . . . . . . . . .
11531 212.         .     O   .I        .         .         .         .         .         .       S .         .         .         .
11532 213.         .     O   . I       .         .         .         .         .         .       S .         .         .         .
11533 214.         .      O  .  I      .         .         .         .         .         .        S.         .         .         .
11534 215.         .      O  .  I      .         .         .         .         .         .        S.         .         .         .
11535 216.         .       O .   I     .         .         .         .         .         .        S.         .         .         .
11536 217.         .        O.   I     .         .         .         .         .         .        S.         .         .         .
11537 218.         .        O.    I    .         .         .         .         .         .        S.         .         .         .
11538 219.         .         O     I   .         .         .         .         .         .         S         .         .         .
11539 220.         .         O     I   .         .         .         .         .         .         S         .         .         .
11540 221. . . . . . . . . . .O. . .I. . . . . . . . . . . . . . . . . . . . . . . . . . . . . . . . . . S . . . . . . . . . . . . . . . .
11541 222.         .         .O     I  .         .         .         .         .         .         S         .         .         .
11542 223.         .         . O     I .         .         .         .         .         .         S         .         .         .
11543 224.         .         .  O     I.         .         .         .         .         .         .S        .         .         .
11544 225.         .         .  O     I.         .         .         .         .         .         .S        .         .         .
11545 226.         .         .   O     I         .         .         .         .         .         .S        .         .         .
11546 227.         .         .   O     I         .         .         .         .         .         .S        .         .         .
11547 228.         .         .   O     .I        .         .         .         .         .         . S       .         .         .
11548 229.         .         .    O    . I       .         .         .         .         .         . S       .         .         .
11549 230.         .         .    O    .  I      .         .         .         .         .         . S       .         .         .
11550 231. . . . . . . . . . . . O . . . I . . . . . . . . . . . . . . . . . . . . . . . . . . . . . . S . . . . . . . . . . . . . .
11551 232.         .         .     O   .    I    .         .         .         .         .         .  S      .         .         .
11552 233.         .         .      O  .     I   .         .         .         .         .         .  S      .         .         .
11553 234.         .         .       O .      I  .         .         .         .         .         .  S      .         .         .
11554 235.         .         .       O .       I .         .         .         .         .         .   S     .         .         .
11555 236.         .         .        O.        I.         .         .         .         .         .   S     .         .         .
11556 237.         .         .        O.         I         .         .         .         .         .   S     .         .         .
11557 238.         .         .         O         .I        .         .         .         .         .    S    .         .         .
11558 239.         .         .         .O        . I       .         .         .         .         .    S    .         .         .
11559 240.         .         .         .O        .  I      .         .         .         .         .    S    .         .         .
11600 241. . . . . . . . . . . . . . . . O . . . . . I . . . . . . . . . . . . . . . . . . . . . . . . . . . S . . . . . . . . . . . .
11601 242.         .         .         . O       .    I    .         .         .         .         .     S   .         .         .
11602 243.         .         .         .  O      .     I   .         .         .         .         .      S  .         .         .
11603 244.         .         .         .   O     .      I  .         .         .         .         .      S  .         .         .
11604 245.         .         .         .    O    .       I .         .         .         .         .       S .         .         .
11605 246.         .         .         .    O    .        I.         .         .         .         .       S .         .         .
11606 247.         .         .         .     O   .         I         .         .         .         .        S.         .         .
11607 248.         .         .         .      O  .         .I        .         .         .         .        S.         .         .
11608 249.         .         .         .       O .         . I       .         .         .         .         S         .         .
11609 250.         .         .         .        O.         .  I      .         .         .         .         S         .         .
11610 251. . . . . . . . . . . . . . . . . . . . O . . . . . . . I . . . . . . . . . . . . . . . . . . . . . . . . . .S. . . . . . . . . .
11611 252.         .         .         .         .O        .    I    .         .         .         .         .S        .         .
11612 253.         .         .         .         . O       .     I   .         .         .         .         . S       .         .
11613 254.         .         .         .         . O       .      I  .         .         .         .         . S       .         .
11614 255.         .         .         .         .  O      .       I .         .         .         .         .  S      .         .
11615 256.         .         .         .         .   O     .     I   .         .         .         .         .  S      .         .
11616 257.         .         .         .         .    O    .    I    .         .         .         .         .  S      .         .
11617 258.         .         .         .         .    O    .  I      .         .         .         .         .   S     .         .
11618 259.         .         .         .         .     O   .I        .         .         .         .         .   S     .         .
11619 260.         .         .         .         .     O   I         .         .         .         .         .   S     .         .
11620 261. . . . . . . . . . . . . . . . . . . . . . . O I . . . . . . . . . . . . . . . . . . . . . . . . . . . . . . . S . . . . . . . . .
11621 262.         .         .         .         .     I   .         .         .         .         .         .   S     .         .
11622 263.         .         .         .         .    IO   .         .         .         .         .         .   S     .         .
11623 264.         .         .         .         .  I  O   .         .         .         .         .         .   S     .         .
11624 265.         .         .         .         .I    O   .         .         .         .         .         .   S     .         .
11625 266.         .         .         .         I    O    .         .         .         .         .         .   S     .         .
11626 267.         .         .         .       I .    O    .         .         .         .         .         .   S     .         .
11627 268.         .         .         .     I   .    O    .         .         .         .         .         .  S      .         .
11628 269.         .         .         .    I    .   O     .         .         .         .         .         .  S      .         .
11629 270.         .         .         .  I      .   O     .         .         .         .         .         .  S      .         .
11630 271. . . . . . . . . . . . . . . .I. . . . . .O. . . . . . . . . . . . . . . . . . . . . . . . . . . . . . . . . S . . . . . . . . .
11631 272.         .         .         I         . O       .         .         .         .         .         . S       .         .
11632 273.         .         .       I .         .O        .         .         .         .         .         . S       .         .
11633 274.         .         .     I   .         O         .         .         .         .         .         .S        .         .
11634 275.         .         .   I     .        O.         .         .         .         .         .         .S        .         .
11635 276.         .         .  I      .       O .         .         .         .         .         .         S         .         .
```

```
  11636 277.         .         .I        .       O .         .         .         .         .         .        S.         .         .
  11637 278.         .        I.         .      O  .         .         .         .         .         .        S.         .         .
  11638 279.         .       I .         .    O    .         .         .         .         .         .       S .         .         .
  11639 280.         .     I   .         .   O     .         .         .         .         .         .       S .         .         .
  11640 281. . . . . . . I . . . . . . . . .O. . . . . . . . . . . . . . . . . . . . . . . . . . . . . . .S. . . . . . . . . . .
  11641 282.         .  I      .         . O       .         .         .         .         .         .     S   .         .         .
  11642 283.         .I        .         .O        .         .         .         .         .         .     S   .         .         .
  11643 284.         .I        .         O         .         .         .         .         .         .    S    .         .         .
  11644 285.         .I        .        O.         .         .         .         .         .         .   S     .         .         .
  11645 286.         .I        .       O .         .         .         .         .         .         .   S     .         .         .
  11646 287.         I         .      O  .         .         .         .         .         .         .  S      .         .         .
  11647 288.         I         .     O   .         .         .         .         .         .         .  S      .         .         .
  11648 289.         I         .    O    .         .         .         .         .         .         . S       .         .         .
  11649 290.         I         .   O     .         .         .         .         .         .         .S        .         .         .
  11650 291. . . . . I . . . . . .O. . . . . . . . . . . . . . . . . . . . . . . . . . . . . . . . . .S. . . . . . . . . . . . . .
  11651 292.         I         . O       .         .         .         .         .         .         .S        .         .         .
  11652 293.         I         .O        .         .         .         .         .         .         S         .         .         .
  11653 294.         I         O         .         .         .         .         .         .         S         .         .         .
  11654 295.        I.        O.         .         .         .         .         .         .        S.         .         .         .
  11655 296.        I.       O .         .         .         .         .         .         .        S.         .         .         .
  11656 297.        I.      O  .         .         .         .         .         .         .        S.         .         .         .
  11657 298.        I.      O  .         .         .         .         .         .         .        S.         .         .         .
  11658 299.        I.     O   .         .         .         .         .         .         .       S .         .         .         .
  11659 300.--------I.----O----.---------.---------.---------.---------.---------.---------.-------S-.---------.---------.---------.
1
1
                                                           RUNOFF SUMMARY
                                                   FLOW IN CUBIC FEET PER SECOND
                                                TIME IN HOURS,  AREA IN SQUARE MILES

                                       PEAK   TIME OF     AVERAGE FLOW FOR MAXIMUM PERIOD      BASIN     MAXIMUM     TIME OF
          OPERATION       STATION      FLOW     PEAK                                            AREA      STAGE     MAX STAGE
+                                                          6-HOUR     24-HOUR     72-HOUR

          HYDROGRAPH AT
+                        SWV1495_        58.    4.23          14.         14.         14.        .08

          ROUTED TO
+                            BF14        46.    4.35          12.         12.         12.        .08
+                                                                                                           4.33        4.35


 *** NORMAL END OF HEC-1 ***
```

APPENDIX G

FEMA FIRMETTE

NOTES TO USERS

This map is for use in administering the National Flood Insurance Program. It does not necessarily identify all areas subject to flooding, particularly from local drainage sources of small size. The **community map repository** should be consulted for possible updated or additional flood hazard information.

To obtain more detailed information in areas where **Base Flood Elevations** (BFEs) and/or **floodways** have been determined, users are encouraged to consult the Flood Profiles and Floodway Data and/or Summary of Stillwater Elevations tables contained within the Flood Insurance Study (FIS) report that accompanies this FIRM. Users should be aware that BFEs shown on the FIRM represent rounded whole-foot elevations. These BFEs are intended for flood insurance rating purposes only and should not be used as the sole source of flood elevation information. Accordingly, flood elevation data presented in the FIS report should be utilized in conjunction with the FIRM for purposes of construction and/or floodplain management.

Coastal Base Flood Elevations (BFEs) shown on this map apply only landward of 0.0' North American Vertical Datum of 1988 (NAVD 88). Users of this FIRM should be aware that coastal flood elevations are also provided in the Summary of Stillwater Elevations table in the Flood Insurance Study report for this jurisdiction. Elevations shown in the Summary of Stillwater Elevations table should be used for construction and/or floodplain management purposes when they are higher than the elevations shown on this FIRM.

Boundaries of the **floodways** were computed at cross sections and interpolated between cross sections. The floodways were based on hydraulic considerations with regard to requirements of the National Flood Insurance Program. Floodway widths and other pertinent floodway data are provided in the Flood Insurance Study report for this jurisdiction.

Certain areas not in Special Flood Hazard Areas may be protected by **flood control structures**. Refer to Section 2.4 "Flood Protection Measures" of the Flood Insurance Study report for information on flood control structures for this jurisdiction.

The **projection** used in the preparation of this map was Universal Transverse Mercator (UTM) Zone 11. The **horizontal datum** was NAD83, GRS1980 spheroid. Differences in datum, spheroid, projection or UTM zones used in the production of FIRMs for adjacent jurisdictions may result in slight positional differences in map features across jurisdiction boundaries. These differences do not affect the accuracy of this FIRM.

Flood elevations on this map are referenced to the North American Vertical Datum of 1988. These flood elevations must be compared to structure and ground elevations referenced to the same **vertical datum**. For information regarding conversion between the National Geodetic Vertical Datum of 1929 and the North American Vertical Datum of 1988, visit the National Geodetic Survey website at http://www.ngs.noaa.gov/ or contact the National Geodetic Survey at the following address:

NGS Information Services
NOAA, N/NGS12
National Geodetic Survey
SSMC-3, #9202
1315 East-West Highway
Silver Spring, Maryland 20910-3282
(301) 713-3242

To obtain current elevation, description, and/or location information for **bench marks** shown on this map, please contact the Information Services Branch of the National Geodetic Survey at **(301) 713-3242** or visit its website at http://www.ngs.noaa.gov/.

Base map information shown on this FIRM was provided in digital format by the USDA National Agriculture Imagery Program (NAIP). this information was photogrammetrically compiled at a scale of 1:24,000 from aerial photography dated 2009.

This map reflects more detailed and up-to-date **stream channel configurations** than those shown on the previous FIRM for this jurisdiction. The floodplains and floodways that were transferred from the previous FIRM may have been adjusted to conform to these new stream channel configurations. As a result, the Flood Profiles and Floodway Data tables *in the Flood Insurance Study report (which contains authoritative hydraulic data)* may reflect stream channel distances that differ from what is shown on this map.

Corporate limits shown on this map are based on the best data available at the time of publication. Because changes due to annexations or de-annexations may have occurred after this map was published, map users should contact appropriate community officials to verify current corporate limit locations.

Please refer to the separately printed **Map Index** for an overview map of the county showing the layout of map panels; community map repository addresses; and a Listing of Communities table containing National Flood Insurance Program dates for each community as well as a listing of the panels on which each community is located.

Contact the **FEMA Map Service Center** at 1-877-FEMA MAP (1-877-336-2627) for information on available products associated with this FIRM. Available products may include previously issued Letters of Map Change, a Flood Insurance Study report, and/or digital versions of this map. The FEMA Map Service Center may also be reached by Fax at 1-800-358-9620 and its website at http://msc.fema.gov/.

If you have **questions about this map** or questions concerning the National Flood Insurance Program in general, please call **1-877-FEMA MAP** (1-877-336-2627) or visit the FEMA website at http://www.fema.gov/business/nfip/.

The **"profile base lines"** depicted on this map represent the hydraulic modeling baselines that match the flood profiles in the FIS report. As a result of improved topographic data, the "profile base line", in some cases, may deviate significantly from the channel centerline or appear outside the SFHA.

Provisionally Accredited Levee Notes to Users: Check with your local community to obtain more information, such as the estimated level of protection provided (which may exceed the 1-percent-annual-chance level) and Emergency Action Plan, on the levee system(s) shown as providing protection for areas on this panel. To maintain accreditation, the levee owner or community is required to submit the data and documentation necessary to comply with Section 65.10 of the NFIP regulations by July 23, 2000. If the community or owner does not provide the necessary data and documentation or if the data and documentation provided indicate the levee system does not comply with Section 65.10 requirements, FEMA will revise the flood hazard and risk information for this area to reflect de-accreditation of the levee system. To mitigate flood risk in residual risk areas, property owners and residents are encouraged to consider flood insurance and floodproofing or other protective measures. For more information on flood insurance, interested parties should visit the FEMA Website at http://www.fema.gov/business/nfip/index/.shtm.

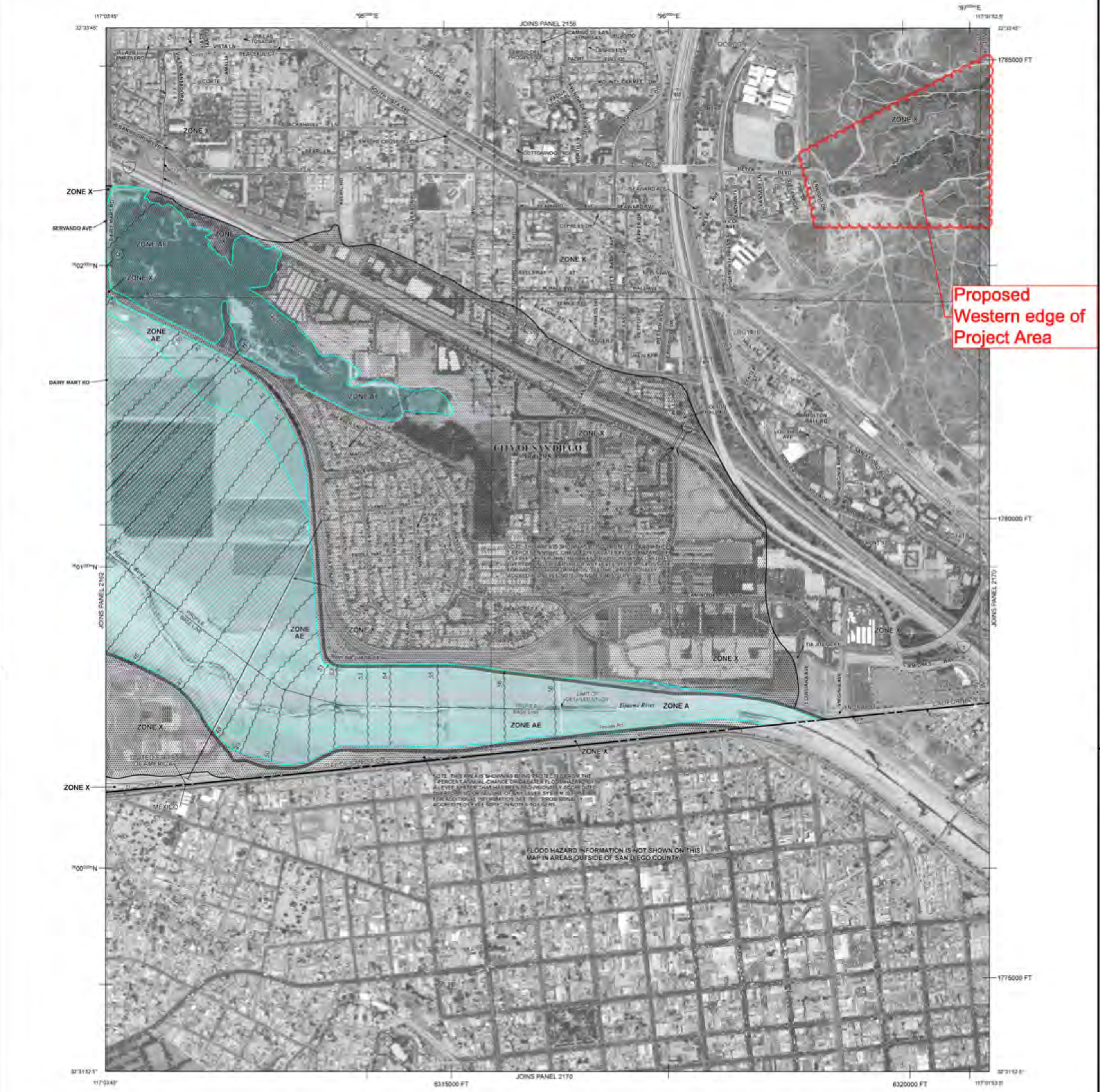

LEGEND

▨ SPECIAL FLOOD HAZARD AREAS SUBJECT TO INUNDATION BY THE 1% ANNUAL CHANCE FLOOD

The 1% annual chance flood (100-year flood), also known as the base flood, is the flood that has a 1% chance of being equaled or exceeded in any given year. The Special Flood Hazard Area is the area subject to flooding by the 1% annual chance flood. Areas of Special Flood Hazard include Zones A, AE, AH, AO, AR, A99, V, and VE. The Base Flood Elevation is the water-surface elevation of the 1% annual chance flood.

ZONE A	No Base Flood Elevations determined.
ZONE AE	Base Flood Elevations determined.
ZONE AH	Flood depths of 1 to 3 feet (usually areas of ponding); Base Flood Elevations determined.
ZONE AO	Flood depths of 1 to 3 feet (usually sheet flow on sloping terrain); average depths determined. For areas of alluvial fan flooding, velocities also determined.
ZONE AR	Special Flood Hazard Area formerly protected from the 1% annual chance flood by a flood control system that was subsequently decertified. Zone AR indicates that the former flood control system is being restored to provide protection from the 1% annual chance or greater flood.
ZONE A99	Areas to be protected from 1% annual chance flood event by a Federal flood protection system under construction; no Base Flood Elevations determined.
ZONE V	Coastal flood zone with velocity hazard (wave action); no Base Flood Elevations determined.
ZONE VE	Coastal flood zone with velocity hazard (wave action); Base Flood Elevations determined.

▨ FLOODWAY AREAS IN ZONE AE

The floodway is the channel of a stream plus any adjacent floodplain areas that must be kept free of encroachment so that the 1% annual chance flood can be carried without substantial increases in flood heights.

▨ OTHER FLOOD AREAS

ZONE X	Areas of 0.2% annual chance flood; areas of 1% annual chance flood with average depths of less than 1 foot or with drainage areas less than 1 square mile; and areas protected by levees from 1% annual chance flood.

☐ OTHER AREAS

ZONE X	Areas determined to be outside the 0.2% annual chance floodplain.
ZONE D	Areas in which flood hazards are undetermined, but possible.

▨ COASTAL BARRIER RESOURCES SYSTEM (CBRS) AREAS

▨ OTHERWISE PROTECTED AREAS (OPAs)

CBRS areas and OPAs are normally located within or adjacent to Special Flood Hazard Areas.

———	1% annual chance floodplain boundary
———	0.2% annual chance floodplain boundary
— — —	Floodway boundary
— — —	Zone D boundary
••••••••	CBRS and OPA boundary
▨ ←	Boundary dividing Special Flood Hazard Area Zones and boundary dividing Special Flood Hazard Areas of different Base Flood Elevations, flood depths, or flood velocities
~~ 513 ~~~	Base Flood Elevation line and value; elevation in feet*
(EL 987)	Base Flood Elevation value where uniform within zone; elevation in feet*

* Referenced to the North American Vertical Datum of 1988

(A)———(A)	Cross section line
(23)- - - -(23)	Transect line
97°07'30", 32°22'30"	Geographic coordinates referenced to the North American Datum of 1983 (NAD 83), Western Hemisphere
⁴275ᵐᵐᴱ	1000-meter Universal Transverse Mercator grid ticks, zone 11
6000000 FT	5000-foot grid values: California State Plane coordinate system, Zone VI (FIPSZONE = 406), Lambert projection
DX5510 ×	Bench mark (see explanation in Notes to Users section of this FIRM panel)
● M1.5	River Mile

MAP REPOSITORIES
Refer to Map Repositories list on Map Index

EFFECTIVE DATE OF COUNTYWIDE
FLOOD INSURANCE RATE MAP
June 19, 1997

EFFECTIVE DATE(S) OF REVISION(S) TO THIS PANEL
May 16, 2012 – to update corporate limits, to add roads and road names, to incorporate previously issued Letters of Map Revision, and to update map elevations to North American Vertical Datum of 1988.

For community map revision history prior to countywide mapping, refer to the Community Map History table located in the Flood Insurance Study report for this jurisdiction.

To determine if flood insurance is available in this community, contact your insurance agent or call the National Flood Insurance Program at 1-800-638-6620.

MAP SCALE 1" = 500'

NFIP
NATIONAL FLOOD INSURANCE PROGRAM

PANEL 2166G

FIRM

FLOOD INSURANCE RATE MAP

SAN DIEGO COUNTY, CALIFORNIA

AND INCORPORATED AREAS

PANEL 2166 OF 2375

(SEE MAP INDEX FOR FIRM PANEL LAYOUT)

CONTAINS:

COMMUNITY	NUMBER	PANEL	SUFFIX
SAN DIEGO, CITY OF	060295	2166	G

Notice to User: The **Map Number** shown below should be used when placing map orders; the **Community Number** shown above should be used on insurance applications for the subject community.

MAP NUMBER
06073C2166G

MAP REVISED
MAY 16, 2012

Federal Emergency Management Agency

National Flood Hazard Layer FIRMette

FEMA

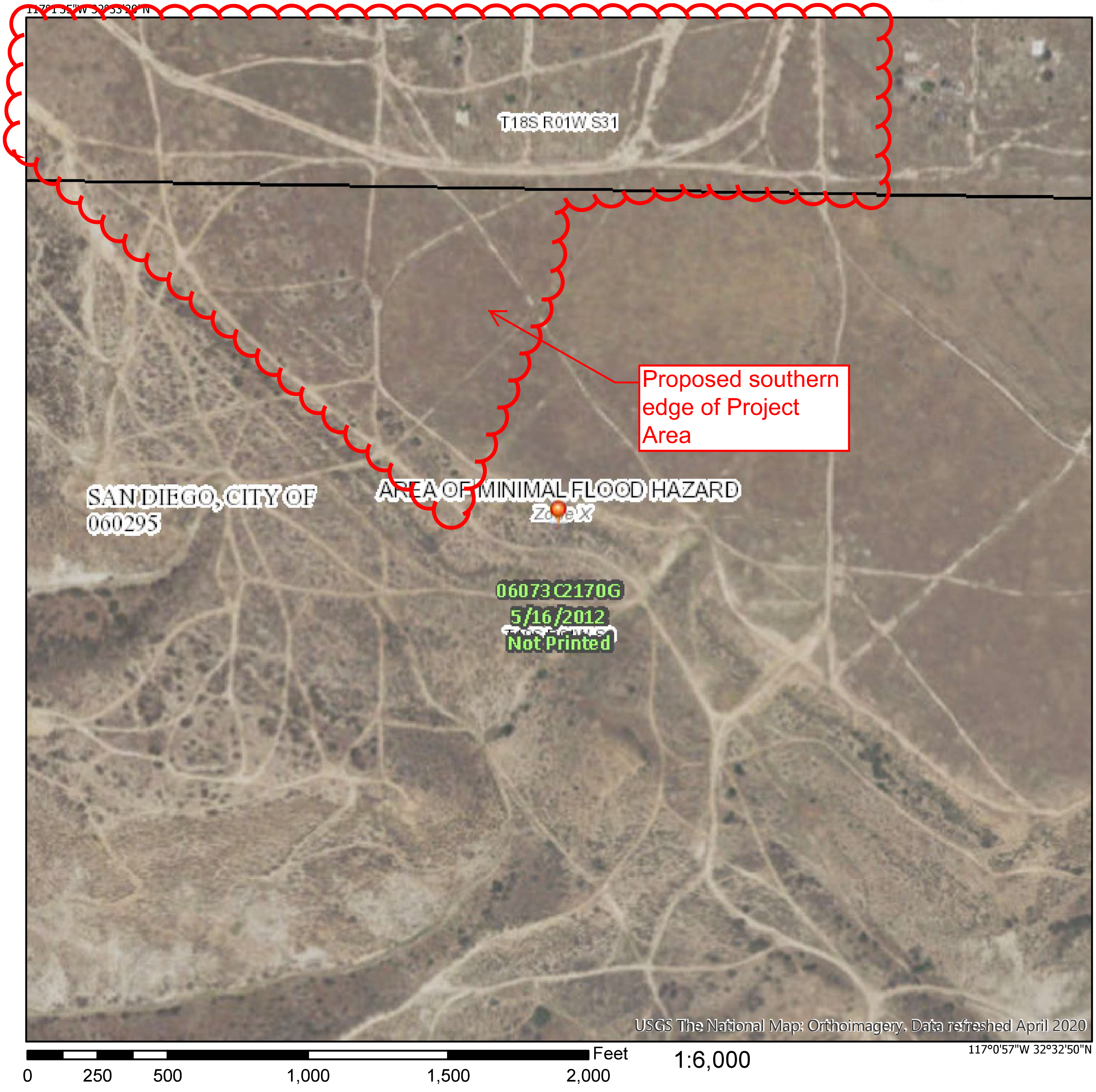

Legend

SEE FIS REPORT FOR DETAILED LEGEND AND INDEX MAP FOR FIRM PANEL LAYOUT

SPECIAL FLOOD HAZARD AREAS	■	Without Base Flood Elevation (BFE) *Zone A, V, A99*
		With BFE or Depth *Zone AE, AO, AH, VE, AR*
	▨	Regulatory Floodway
OTHER AREAS OF FLOOD HAZARD	■	0.2% Annual Chance Flood Hazard, Areas of 1% annual chance flood with average depth less than one foot or with drainage areas of less than one square mile *Zone X*
	▨	Future Conditions 1% Annual Chance Flood Hazard *Zone X*
	▨	Area with Reduced Flood Risk due to Levee. See Notes. *Zone X*
	▨	Area with Flood Risk due to Levee *Zone D*
OTHER AREAS	NO SCREEN	Area of Minimal Flood Hazard *Zone X*
	▭	Effective LOMRs
	■	Area of Undetermined Flood Hazard *Zone D*
GENERAL STRUCTURES	— — —	Channel, Culvert, or Storm Sewer
	ıııııı	Levee, Dike, or Floodwall
OTHER FEATURES	B 20.2 17.5	Cross Sections with 1% Annual Chance Water Surface Elevation
	8 — —	Coastal Transect
	513	Base Flood Elevation Line (BFE)
	═	Limit of Study
	═	Jurisdiction Boundary
	--- ---	Coastal Transect Baseline
	—	Profile Baseline
	—	Hydrographic Feature
MAP PANELS	☐	Digital Data Available
	☐	No Digital Data Available
	☒	Unmapped

N

The pin displayed on the map is an approximate point selected by the user and does not represent an authoritative property location.

This map complies with FEMA's standards for the use of digital flood maps if it is not void as described below. The basemap shown complies with FEMA's basemap accuracy standards

The flood hazard information is derived directly from the authoritative NFHL web services provided by FEMA. This map was exported on 7/10/2020 at 2:40 PM and does not reflect changes or amendments subsequent to this date and time. The NFHL and effective information may change or become superseded by new data over time.

This map image is void if the one or more of the following map elements do not appear: basemap imagery, flood zone labels, legend, scale bar, map creation date, community identifiers, FIRM panel number, and FIRM effective date. Map images for unmapped and unmodernized areas cannot be used for regulatory purposes.

National Flood Hazard Layer FIRMette

FEMA

117°1'39"W 32°33'48"N

Legend

SEE FIS REPORT FOR DETAILED LEGEND AND INDEX MAP FOR FIRM PANEL LAYOUT

SPECIAL FLOOD HAZARD AREAS	🟦	Without Base Flood Elevation (BFE) *Zone A, V, A99* With BFE or Depth *Zone AE, AO, AH, VE, AR*
	▨	Regulatory Floodway
OTHER AREAS OF FLOOD HAZARD	🟧	0.2% Annual Chance Flood Hazard, Areas of 1% annual chance flood with average depth less than one foot or with drainage areas of less than one square mile *Zone X*
	▨	Future Conditions 1% Annual Chance Flood Hazard *Zone X*
	▨	Area with Reduced Flood Risk due to Levee. See Notes. *Zone X*
	▨	Area with Flood Risk due to Levee *Zone D*
OTHER AREAS	NO SCREEN	Area of Minimal Flood Hazard *Zone X*
	▭	Effective LOMRs
	▭	Area of Undetermined Flood Hazard *Zone D*
GENERAL STRUCTURES	— — —	Channel, Culvert, or Storm Sewer
	I I I I I I I	Levee, Dike, or Floodwall
OTHER FEATURES	B 20.2 17.5	Cross Sections with 1% Annual Chance Water Surface Elevation
	8 — —	Coastal Transect
	513	Base Flood Elevation Line (BFE)
	—	Limit of Study
	—	Jurisdiction Boundary
	— — —	Coastal Transect Baseline
	- —	Profile Baseline
	—	Hydrographic Feature
MAP PANELS	☐	Digital Data Available
	⬚	No Digital Data Available
	☒	Unmapped

N

The pin displayed on the map is an approximate point selected by the user and does not represent an authoritative property location.

This map complies with FEMA's standards for the use of digital flood maps if it is not void as described below. The basemap shown complies with FEMA's basemap accuracy standards

The flood hazard information is derived directly from the authoritative NFHL web services provided by FEMA. This map was exported on 7/10/2020 at 2:50 PM and does not reflect changes or amendments subsequent to this date and time. The NFHL and effective information may change or become superseded by new data over time.

This map image is void if the one or more of the following map elements do not appear: basemap imagery, flood zone labels, legend, scale bar, map creation date, community identifiers, FIRM panel number, and FIRM effective date. Map images for unmapped and unmodernized areas cannot be used for regulatory purposes.

National Flood Hazard Layer FIRMette

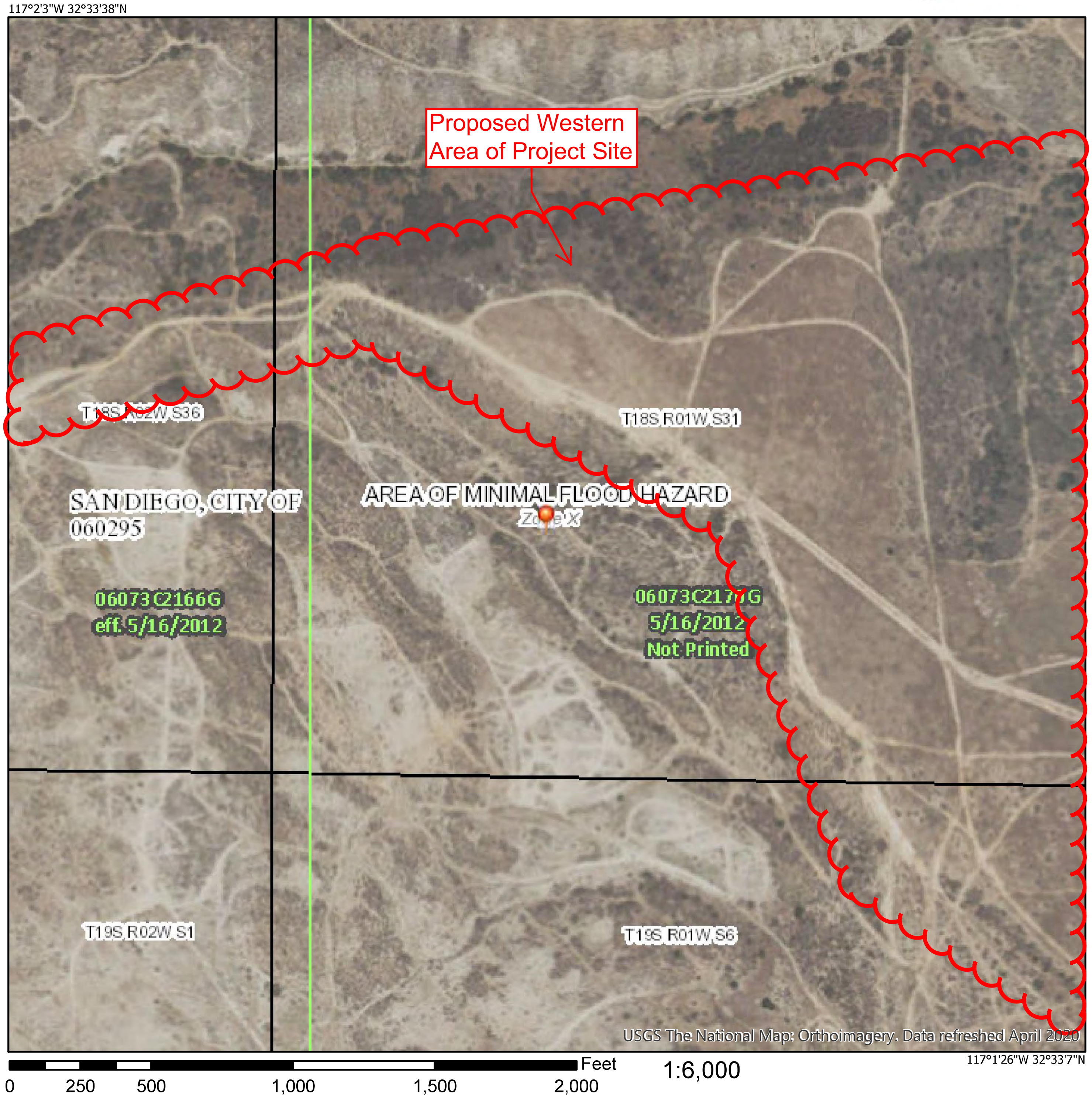

Legend

SEE FIS REPORT FOR DETAILED LEGEND AND INDEX MAP FOR FIRM PANEL LAYOUT

SPECIAL FLOOD HAZARD AREAS
- Without Base Flood Elevation (BFE) *Zone A, V, A99*
- With BFE or Depth *Zone AE, AO, AH, VE, AR*
- Regulatory Floodway

OTHER AREAS OF FLOOD HAZARD
- 0.2% Annual Chance Flood Hazard, Areas of 1% annual chance flood with average depth less than one foot or with drainage areas of less than one square mile *Zone X*
- Future Conditions 1% Annual Chance Flood Hazard *Zone X*
- Area with Reduced Flood Risk due to Levee. See Notes. *Zone X*
- Area with Flood Risk due to Levee *Zone D*

OTHER AREAS
- NO SCREEN Area of Minimal Flood Hazard *Zone X*
- Effective LOMRs
- Area of Undetermined Flood Hazard *Zone D*

GENERAL STRUCTURES
- Channel, Culvert, or Storm Sewer
- Levee, Dike, or Floodwall

OTHER FEATURES
- 20.2 / 17.5 Cross Sections with 1% Annual Chance Water Surface Elevation
- 8 Coastal Transect
- 513 Base Flood Elevation Line (BFE)
- Limit of Study
- Jurisdiction Boundary
- Coastal Transect Baseline
- Profile Baseline
- Hydrographic Feature

MAP PANELS
- Digital Data Available
- No Digital Data Available
- Unmapped

N

The pin displayed on the map is an approximate point selected by the user and does not represent an authoritative property location.

This map complies with FEMA's standards for the use of digital flood maps if it is not void as described below. The basemap shown complies with FEMA's basemap accuracy standards

The flood hazard information is derived directly from the authoritative NFHL web services provided by FEMA. This map was exported on 7/10/2020 at 2:52 PM and does not reflect changes or amendments subsequent to this date and time. The NFHL and effective information may change or become superseded by new data over time.

This map image is void if the one or more of the following map elements do not appear: basemap imagery, flood zone labels, legend, scale bar, map creation date, community identifiers, FIRM panel number, and FIRM effective date. Map images for unmapped and unmodernized areas cannot be used for regulatory purposes.

APPENDIX H

City of San Diego Meeting Minutes

RICK
ENGINEERING COMPANY

Meeting Minutes

January 28, 2022
City of San Diego
9:00 a.m. – 10:00 a.m.

SUBJECT: 15013C: SOUTHWEST VILLAGE – DRAINAGE DIVERSION AWAY FROM LANDSLIDE AREA

Participants:

City of San Diego:
Thomas Bui (TB) - DSD, Sean Torres (ST) – Discretionary, Eric Mosolgo (EM) – Ministerial
Rick Engineering:
Tim Gabrielson (TG), Brendan Hastie (BH)
TriPointe Homes (TPH) Representatives:
Maykia Vang – Civil Sense – Civil (MV), Wayne Chang – Chang Consultants – Drainage (WC)

ITEMS OF DISCUSSION

- Introductions
- Design History
- Overview of Project Drainage
- Moody Canyon Sub-watershed
- Spring Canyon Sub-watershed
- Action Items

Meeting Minutes:

1. **Design History**

BH and TG shared the project history includes:

- Specific Plan
- VTM, including Technical Reports (Drainage & Detention Study, PDP SWQMP & HMP)
- The SP and VTM had both been processed with the City for a while (2018 through 2020), and the VTM and Tech Reports were near approval around July 2020, and had incorporated numerous meetings with DSD, SWD Operations, etc, as it pertained to Public vs Private Storm Drain, Outfalls, and WQ/HMP BMPs.
  - Conceptual Drainage & Water Quality Summary for Southwest Village Specific Plan, last revised July 16, 2020
  - DS for South Otay Mesa VTM, last revised 7/16/2020
  - PDP SWQMP for South Otay Mesa VTM, last revised 7/16/2020

2. Drainage Overview

BH shared an overview of the project drainage, including:

- Moody Canyon Sub-watershed – the VTM area mostly drained this direction in the prior design. Beyer Blvd extension runs parallel along Moody Canyon as well.
    - This area discharges to an Existing 54-inch RCP in Beyer Blvd, west of the site.
    - BH - The project would detain back to existing peak flow rates for the 100-year design storm event, to be equal or less than existing conditions.
        - EM – requested that the project take a look at capacity of the immediate downstream existing system, but acknowledged not needing to hydraulically analyze it beyond that.
- Spring Canyon Sub-watershed – the easterly half of the Specific Plan area generally drains east towards Spring Canyon (some through tributaries Dillon Canyon, and Finger Canyon).
    - Spring Canyon terminates at the International Border, entering a large culvert system. The canyon is not visible per aerial imagery on the Mexico side but per topography would head west towards the TJ River, which then enters back into the US.
    - BH – The project would detain back to existing peak flow rates for the 5-year, 10-year, 25-year, 50-year, and 100-year storm events (per the Detention Criteria for flows from City areas to International Border). The project would also control flows for HMP.
    - BH – For TPH, this portion of the Specific Plan area, and future VTM, would discharge through:
        - Outfall #9 - which would be extended down the steep slope to the toe, discharging near the toe of the northern bank of Spring Canyon, just upstream of the Culvert Structure near the border; and
        - Outfall #10 – into the headwaters of Finger Canyon, which goes to Dillon Canyon, then Spring Canyon
- Landslide Area – generally surrounds the west and south of the Specific Plan area.
    - There were numerous Proposed Outfalls towards the Landslide Area, with Existing Drainage Boundaries that drained their direction.
    - The prior design, up through 2020, had paid close attention to mimic drainage areas towards downstream areas (i.e. – minimize diversion), and to also control flow rates and volumes with Detention (100-year), and Hydromodification Management (0.1Q2 through Q10)
    - TG-Recent Geotechnical Borings and explorations of the Landslides for geotechnical characteristics and a groundwater study was performed to model the Landslide slope stability. The recommendations by both the Geotechnical engineer and the groundwater consultant were to not discharge drainage to the landslide slopes as the drainage could infiltrate the landslide through infiltration or enter fissures and cause stability issues with the Landslide area.

        - TB- commented that we should coordinate with City staff and our Environmental team for the reduction of drainage to environmental habitat

3. Revised Drainage Approach with Diversion

- The areas that were previously going to discharge across the landslide areas, will now be conveyed either north the Moody Canyon system, or south and east to the Spring Canyon system.
- To "mitigate" the drainage diversion, the project will utilize the proposed underground storage vaults and above ground basin (for Beyer Blvd), to "Detain" back to Pre-project levels, AND, to meet "HMP" requirements back to Pre-development conditions.
    - VTM 1 will be entirely conveyed to the Moody Canyon Subwatershed.
        - The private development areas south of Beyer Blvd will be mitigated with an enlarged Vault and BMP system within the Private Development area, and then discharge into the Public SD system within Beyer Blvd.
        - The public SD system in Beyer Blvd will be mitigated with the above ground Biofiltration Basin, at the western end of the Beyer Blvd Extension.
    - Moody Canyon & Beyer Blvd - There was discussion of several alternatives for how to approach the drainage outfall from the private development area (Basin 300) into Moody Canyon:
        - Alt 1 – required relocated Outfall 3 to be further west, but still outlet down into the CDFW easement area, which would be difficult to access, still require City ownership of the SD, and greater environmental impacts.
            - TB/EM/ST were not in favor of another drainage outfall into a canyon due to long term maintenance and environmental impacts
        - Alt 2 (SELECTED through discussion) – while not typically preferred to commingle private treated/mitigated water with untreated/unmitigated public water, this approach would allow the discharge of the private treated/mitigated runoff into the Beyer SD.
            - The detention and HMP will be modeled in-series and shown that they still collectively mitigate the diversion and meet the HMP criteria for the downstream POC (which for these areas would be considered the 1st open channel downstream of the Ex 54-inch RCP in existing Beyer Blvd, which is TJ River Estuary area, which is known more for sedimentation issues than erosion issues).
            - The WQ flowrates would commingle; however, the onsite private vault would fill and release low flows over time through the Private Compact Biofiltration BMPs, while the Beyer Blvd drainage would route quickly to the Beyer Basin for WQ treatment. The timing considerations, in addition to the unique

        constraints of the site related to the Landslide and Environmentally Sensitive Canyon Areas, result in this non-traditional approach being a preferred solution for the various stakeholders.
        - EM/ST agreed in concept that this should be the direction for the project to proceed with and to submit the reports and analysis for review with the Next VTM submittal
    - VTM 2 (future VTM) would be located within the area that will drain towards the Spring Canyon Subwatershed. As mentioned above, it would detain back to existing peak flow rates for the 5-year, 10-year, 25-year, 50-year, and 100-year storm events (per the Detention Criteria for flows from City areas to International Border), and also control flows for HMP.
    - TB/EM/ST all agreed with the overall revised approach to drainage and the proposed methods and criteria to mitigate for the required diversion.

4. Other Items of Discussion

- ST – asked if the landslide areas would become City Open Space in the future? Suggested P&R be included in the discussion, so they are aware.
    - TG noted P&R has been part of many conversations to date, including coordination on the interface between Beyer Blvd, the Beyer regional stormwater basin, and the Beyer Park being design/constructed by the City (designed by others).
- TB – noted that Environmental Planning should be included in the discussions, made aware of the revised project approach.
- EM – asked about downstream Ex. 54-inch RCP capacity, as noted above.
- EM - asked how the public/private flows will interact for low flows to high flows, and the different timing. BH to discuss in the revised drainage reports
- The Regional Beyer Basin will only be sized to address the Public untreated drainage from the tributary streets (Beyer, Street A, and West Ave), but modeled to account for being in-series from a detention and HMP standpoint.
- Small portions of public streets, similar to the past design and approvals, will enter the private development areas and be treated and detained within the private BMPs.
- Further evaluation of public easements will need to be evaluated for VTM 2 outfall #9 and #10.

5. Recap:

1) RICK to proceed with the proposed diversion related to reducing potential impacts to the Landslide Area, and will document the design approach with the revised Drainage Study (with Detention) and PDP SWQMP (with HMP).
2) RICK will be updating the Specific Plan, VTM, and Tech Reports to resubmit to the City of SD DSD on 3/16/2022.

DIST	COUNTY	ROUTE	POST MILES TOTAL PROJECT	[illegible]	[illegible]
11	SD	805	0.5-3.7	1	385
	SD	75	4.5-5.4		

I-805-1(82)1

STATE OF CALIFORNIA
BUSINESS AND TRANSPORTATION AGENCY
DEPARTMENT OF PUBLIC WORKS
DIVISION OF HIGHWAYS

PROJECT PLANS FOR CONSTRUCTION ON
STATE HIGHWAY

IN SAN DIEGO COUNTY IN AND NEAR SAN DIEGO AND CHULA VISTA ON ROUTE 805 FROM ROUTE 5 TO 3.2 MILES NORTH OF ROUTE 5 AND ON ROUTE 75 FROM 0.5 MILE EAST TO 0.3 MILE WEST OF ROUTE 805

To be supplemented by Standard Plans dated January 1971

SCALE IN FEET
500 0 500 1000 1500

Legend

▬	Grading & Paving
▨	Grading
═	Under Construction
┅	Future Construction

Length of Work-3.2 miles (Route 805)

Length of Work-0.8 mile (Route 75)

T. R. VASQUEZ 3/72
R. H. CLARK 3/72
J. D. GRASBERGER 3/72

Drawn By	Date
Checked By	Date

The detailed plans are a portion of the route for the State Highway adopted by the California Highway Commission on September 27, 1960 and June 29, 1965 and declared a FREEWAY by resolution of the California Highway Commission on September 27, 1960 and June 29, 1965.

Approved December 26, 1972

DEPUTY STATE HIGHWAY ENGINEER
REGISTERED CIVIL ENGINEER NO. 7605

AS BUILT PLANS
Contract No [illegible]
Date Completed [illegible]
Document No [illegible]

"AS BUILT"
CONTRACT [illegible]
DATE COMPLETED [illegible]

Contract No. 11-045814

11201 045811

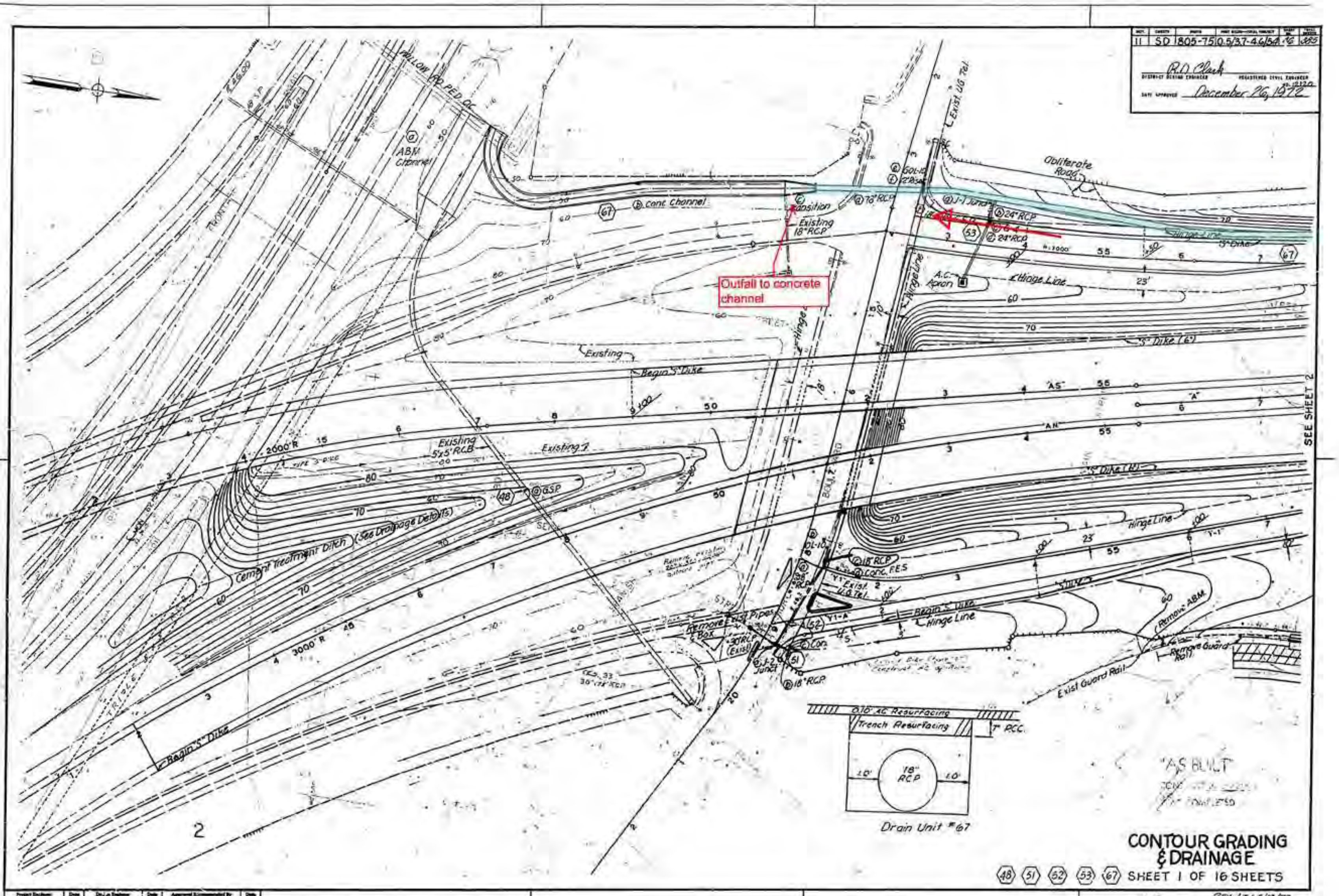

11	SD	805-75	0.5/3.7-4.6/5.4	16	395

R.D. Clark
DISTRICT DESIGN ENGINEER
REGISTERED CIVIL ENGINEER No. 12120
DATE APPROVED December 26, 1972

CONTOUR GRADING & DRAINAGE

(48) (51) (52) (53) (67) SHEET 1 OF 16 SHEETS

46

45

REV. 4.7.1 6/10/72

FORM WH-33A-77

AS BUILT PLANS
Contract No. 11-0-[illegible]
Date Completed 7-9-75
Document No. [illegible]

I HEREBY CERTIFY THAT THIS IS A TRUE AND ACCURATE COPY OF THE ABOVE DOCUMENT TAKEN UNDER MY DIRECTION AND CONTROL ON THIS DATE IN SACRAMENTO, CALIFORNIA PURSUANT TO AUTHORIZATION BY THE DIRECTOR OF TRANSPORTATION.

SCALE 1" = 50' · MICROFILM - STATE OF CALIFORNIA - DEPARTMENT OF TRANSPORTATION - MICROFILM · SCALE 1" = 20'

DIST	COUNTY	ROUTE	POST MILES—TOTAL PROJECT	SHEET No.	TOTAL SHEETS
11	SD	805-75	05/37-46/5.4	47	385

B.D. Clark
DISTRICT DESIGN ENGINEER
REGISTERED CIVIL ENGINEER No. 12120
DATE APPROVED December 26, 1972

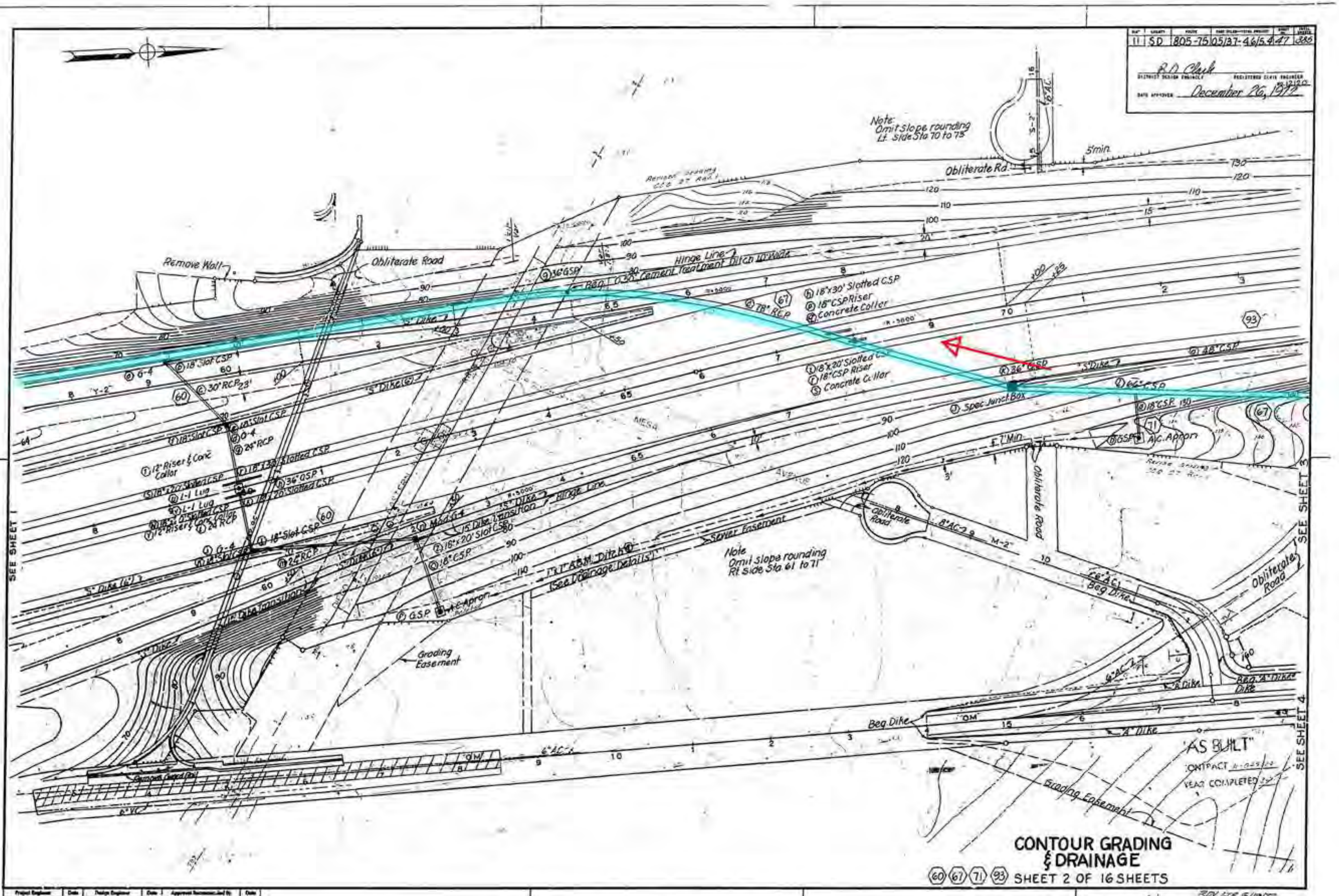

CONTOUR GRADING & DRAINAGE

⑥⓪ ⑥⑦ ⑦① ⑨③ SHEET 2 OF 16 SHEETS

47

46

REV. STR. 6/19/72

FORM WH23A-77

Project Engineer | Date | Design Engineer | Date | Approved Recommended By | Date

AS BUILT PLANS
Contract No. 11-045804
Date Completed 7-5-76
Document No. 4000628

MICROFILMED
JUL 26 '76

I HEREBY CERTIFY THAT THIS IS A TRUE AND ACCURATE COPY OF THE ABOVE DOCUMENT TAKEN UNDER MY DIRECTION AND CONTROL ON THIS DATE AT SACRAMENTO, CALIFORNIA PURSUANT TO AUTHORIZATION BY THE DIRECTOR OF TRANSPORTATION.

DATE 7/26/76

MICROFILM – STATE OF CALIFORNIA – DEPARTMENT OF TRANSPORTATION – MICROFILM

SCALE 1" = 50'
SCALE 1" = 10' or 1" = 100'
SCALE 1" = 20'
SCALE 1" = 40'

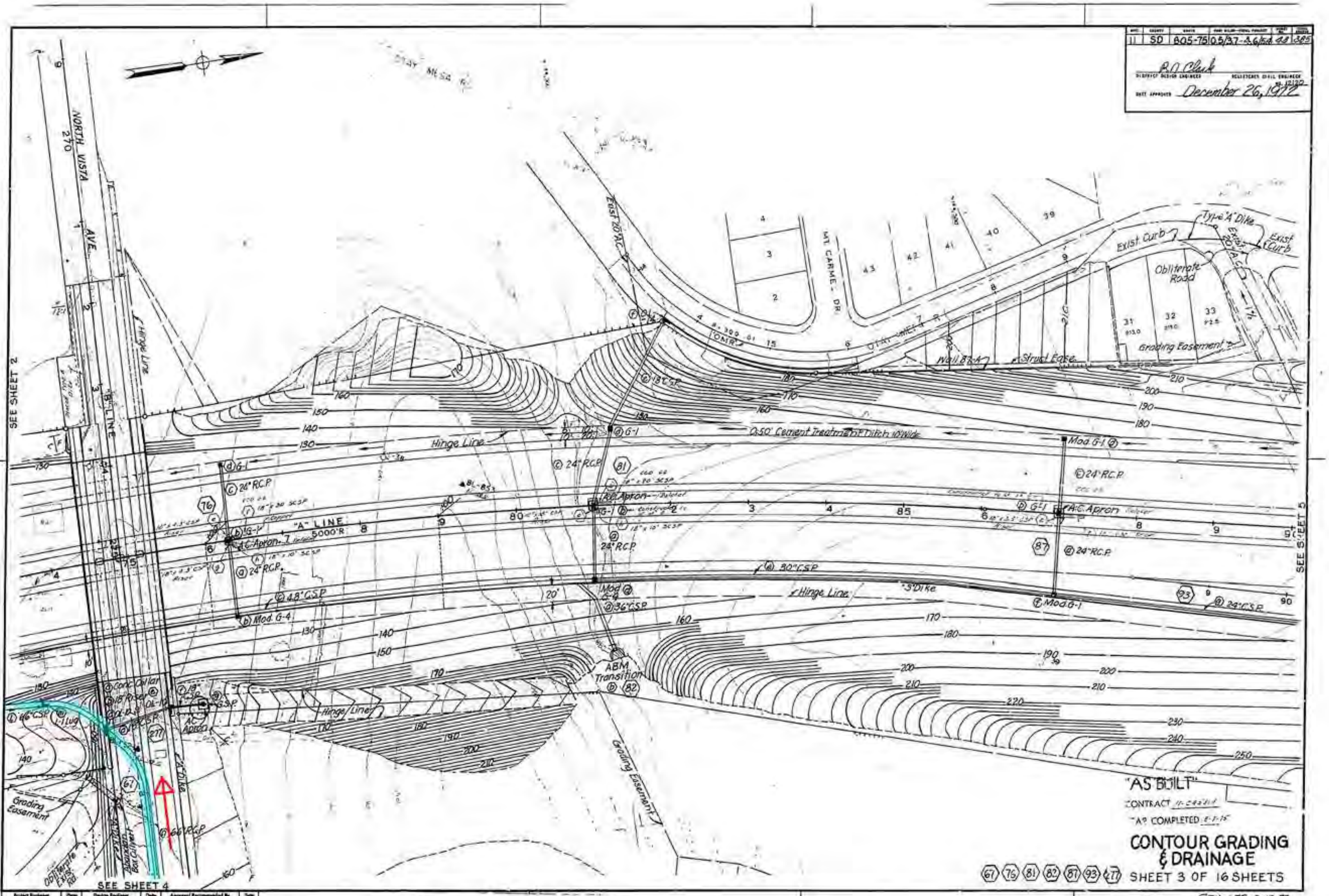

DIST.	COUNTY	ROUTE	POST MILES—TOTAL PROJECT	SHEET NO.	TOTAL SHEETS
11	SD	805-75	0.5/37-4.6/5.4	48	385

B.O. Clark
DISTRICT DESIGN ENGINEER
REGISTERED CIVIL ENGINEER
No. 12120
DATE APPROVED December 26, 1972

"AS BUILT"
CONTRACT 11-043814
"AB" COMPLETED 8-1-75

CONTOUR GRADING & DRAINAGE

67 76 81 82 87 93 277 SHEET 3 OF 16 SHEETS

47 REV. LTR 6-19-72.

FORM WH23A-97

48

MICROFILMED
JUL 2 6 1976

AS BUILT PLANS
Contract No. 11-043814
Date Completed 7-9-75
Document No. A000 6281

I HEREBY CERTIFY THAT THIS IS A TRUE AND ACCURATE COPY OF THE ABOVE DOCUMENT TAKEN UNDER MY DIRECTION AND CONTROL ON THIS DATE IN SACRAMENTO, CALIFORNIA PURSUANT TO AUTHORIZATION BY THE DIRECTOR OF TRANSPORTATION.
7/26/76

SCALE 1"=50'
SCALE 1"=20'
SCALE 1"=40'
SCALE 1"=100'
MICROFILM - STATE OF CALIFORNIA - DEPARTMENT OF TRANSPORTATION - MICROFILM

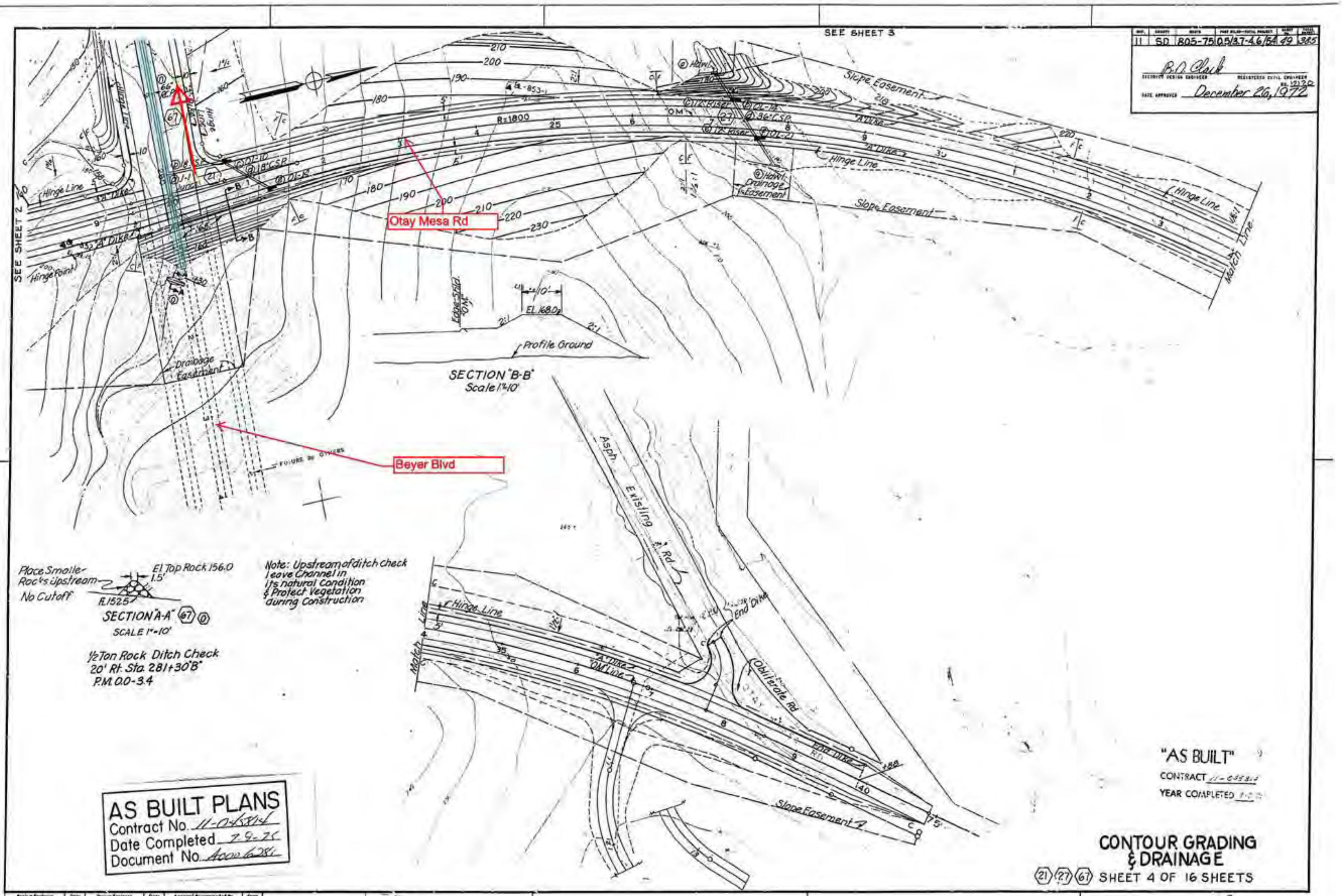

DIST.	COUNTY	ROUTE	POST MILES—TOTAL PROJECT	SHEET No.	TOTAL SHEETS
11	SD	805-75	0.5/3.7-4.6/5.4	49	385

B.D. Clark
SUPERVISING DESIGN ENGINEER
REGISTERED CIVIL ENGINEER No. 12120
DATE APPROVED December 26, 1972

"AS BUILT"
CONTRACT 11-045814
YEAR COMPLETED 7-9-75

AS BUILT PLANS
Contract No. 11-045814
Date Completed 7-9-75
Document No. A0006286

CONTOUR GRADING & DRAINAGE

㉑ ㉗ ⑥⑦ SHEET 4 OF 16 SHEETS

Project Engineer	Date	Design Engineer	Date	Approval Recommended By	Date

MICROFILMED

FORM WH23A-97

I HEREBY CERTIFY THAT THIS IS A TRUE AND ACCURATE COPY OF THE ABOVE DOCUMENT TAKEN UNDER MY DIRECTION AND CONTROL ON THIS DATE IN SACRAMENTO, CALIFORNIA PURSUANT TO AUTHORIZATION BY THE DIRECTOR OF TRANSPORTATION.

DATE 7/26/86 SIGNATURE TITLE

GENERAL NOTES

1. WHERE NEW UNDERGROUND CONNECTS TO EXISTING WORK IT SHALL BE THE RESPONSIBILITY OF THE CONTRACTOR TO DETERMINE THE LOCATIONS AND ELEVATION OF EXISTING WORK PRIOR TO EXCAVATION FOR NEW WORK AND TO CONNECT THE NEW WORK THERETO.
2. PRIOR TO MIXING WITH CEMENT AND WATER, ALL MINERAL AGGREGATE USED FOR THE PRODUCTION OF CEMENT TREATED BASE SHALL HAVE A SAND EQUIVALENT OF NOT LESS THAN 30, WHEN TESTED BY CALIFORNIA DIVISION OF HIGHWAYS TEST METHOD NUMBER CALIFORNIA 217.
3. CONTRACTORS MAKING ANY TYPE OF EXCAVATION ON THIS PROJECT AFTER ROUGH GRADE AND PRIOR TO FINISH GRADE SHALL REMOVE FROM THE SITE OR TO AREA DESIGNATED BY ENGINEER OF WORK, ALL EXCAVATION MATERIAL EXCEPT THAT USED AS COMPACTED BACKFILL IN SUCH EXCAVATION.
4. THE CONTRACTOR SHALL VERIFY THE LOCATION OF AND PROTECT ALL EXISTING IMPROVEMENTS BEFORE AND DURING CONSTRUCTION.
5. TOP OF STORM DRAIN BOXES SHALL BE CONSTRUCTED CONCURRENT WITH ADJOINING CURBS AND GUTTERS.
6. ALL STRUCTURES IN STREET RIGHT OF WAY SHALL BE KEPT AT LEAST 12" BELOW FINISH GRADE UNTIL CURBS, SIDEWALK AND PAVEMENT ARE INSTALLED AND SHALL THEN BE ADJUSTED TO FINISH GRADE.
7. PROVIDE ADEQUATE PROTECTION - CRASH POST, TYPE "G" CURB - PEDESTAL, FOR FIRE HYDRANTS IN ROLLED CURB AREAS - SEE DETAIL. FLANGE SHALL BE ABOVE PEDESTAL.
8. ENGINEER'S GRADE STAKES SHALL BE PROVIDED ON PARTIAL WIDTH STREETS BEFORE PAVING BEGINS.
9. ELECTRICAL & TELEPHONE SERVICE FACILITIES SHALL BE INSTALLED UNDERGROUND IN ACCORDANCE WITH SECTION 102.0404 OF THE MUNICIPAL CODE AND SUBDIVISION BOARD RESOLUTION NO. *264*
THERE ARE EXISTING 12 KVA OVERHEAD LINES ALONG WESTERN EDGE THIS SUBDIVISION TO BE UNDERGROUNDED
10. ALL UNDERGROUND UTILITIES & LATERALS TO BE INSTALLED BEFORE CONSTRUCTION OF CURBS OR CONCRETE
11. CROSS-GUTTERS OR SURFACING OF STREETS.
CONTRACTOR SHALL VERIFY LOCATIONS OF DRIVEWAYS AND SHALL CONSTRUCT DRIVEWAY DEPRESSION CONCURRENT WITH CURB CONSTRUCTION FOR EACH LOT. STANDARD DRAWING NUMBERS G-14, G-15, G-15

WATER AND SEWER NOTES

1. THE WATER AND SEWER FACILITIES SHOWN ON THESE PLANS SHALL BE CONSTRUCTED IN ACCORDANCE WITH THE REQUIREMENTS OF THE WATER UTILITIES DIRECTOR.
2. EACH BUILDING SHALL RECEIVE A 1-INCH WATER SERVICE AND 4-INCH SEWER HOUSE CONNECTION. LOCATION TO BE DETERMINED IN THE FIELD BY THE ENGINEER OF WORK. THE "AS BUILT" LOCATIONS SHALL BE SHOWN ON THESE PLANS AND THE SEWER LATERAL TABLE COMPLETED PRIOR TO ACCEPTANCE OF THE WATER AND SEWER FACILITIES.
3. WATER SERVICES, SEWER LATERALS AND FIRE HYDRANT SERVICES ARE TO BE INSTALLED IN ACCORDANCE WITH THE STANDARD DRAWINGS. THE LOCATION OF WATER AND SEWER FACILITIES SHOWN ON THESE PLANS SHALL TAKE PRECEDENCE IN CASE OF CONFLICTS WITH OTHER UTILITIES NOT SHOWN HEREON.
4. SUBSTITUTION OF MATERIALS FOR CONSTRUCTION OF WATER AND SEWER FACILITIES WILL NOT BE ALLOWED UNLESS APPROVED BY THE WATER UTILITIES DIRECTOR.
5. LOCATE WATER SERVICES AND SEWER HOUSE CONNECTIONS OUT OF DRIVEWAYS. THE SEWER HOUSE CONNECTION SHALL BE A MINIMUM 5' DISTANCE DOWNSTREAM FROM THE WATER SERVICE.
6. WHERE SEWER LATERALS CROSS THE CURB LINE, A LETTER "S" SHALL BE STAMPED OR CHISELED IN THE CURB FACE (1-1/2-INCHES HIGH AND 3/16-INCHES DEEP).
7. COVER OVER WATER MAIN IS TO BE 3' UNLESS OTHER IS CALLED OUT. IF OVER 5' OF COVER AND LESS THAN 2.5', A.C. MAIN IS NOT ACCEPTABLE.
8. SEWER LATERALS ARE TO BE SPACED SO THERE IS ONLY ONE CONNECTION IN ANY ONE PIPE LENGTH. DOUBLE WYES ARE NOT TO BE USED.
9. OPEN ENDS OF ALL SEWER MAINS AND SEWER LATERALS SHALL BE PLUGGED WITH *PVC PLUGS*
10. ALL LATERALS WITH LESS THAN 4-FOOT COVER TO INVERT BE CONCRETE ENCASED.
11. ALL SEWER MAINS AND LATERALS SHALL BE CONSTRUCTED IN ACCORDANCE WITH THE CURRENT SEWER AGENCY AND STREET AGENCY STANDARDS FOR SEWER CONSTRUCTION AND SAID STANDARDS WILL GOVERN ALL SEWER TRENCH BACKFILL.
12. SUBSTITUTION OF MATERIALS FOR CONSTRUCTION OF WATER AND SEWER FACILITIES SHALL NOT BE ALLOWED UNLESS APPROVED BY THE WATER UTILITIES DIRECTOR.
13. ALL WATER MAINS SHALL BE CLASS 150 UNLESS OTHERWISE NOTED.
14. ALL MANHOLE COVERS, GATE VALVE COVERS AND STREET MONUMENTS SHALL BE ADJUSTED TO FINISH GRADE. (NEW OR EXISTING).
15. PRESSURE REGULATORS REQUIRED ON WATER SERVICES.
16. BYPASS REQUIRED ON 12" AND 16" GATE VALVES.

SCALE 1" = 100'

●	INDICATES CONTROL MONUMENTS	
■	INDICATES STREET NAME SIGN	
	INDICATES FIRE HYDRANT	
☒	INDICATES STREET LIGHT SYSTEM	
—o—	INDICATES SEWER MAIN & MANHOLE	
②	INDICATES IMPROVEMENT PLAN SHEET NO.	
——	INDICATES STORM DRAIN	

KEY MAP SYMBOLS

	A.D.T	
BEYER BOULEVARD	20,000	8" A.C. ON 10½" C.T.B.
EAST BEYER BOULEVARD	10,000	8" A.C. ON 10½" C.T.B.
ENCHANTED PLACE	CUL-DE-SAC	2" A.C. ON 5" C.T.B.
FANTASY LANE	CUL-DE-SAC	2" A.C. ON 5" C.T.B.
ILIO AVENUE	CUL-DE-SAC	2" A.C. ON 5" C.T.B.
ENRIGHT DRIVE	LOCAL	2" A.C. ON 5" C.T.B.
DELANY DRIVE	2000	2" A.C. ON 5" C.T.B.

TELEPHONE, GAS & ELECTRIC NOTES

1. NOTICE: ALL TELEPHONE SERVICES WITH THIS SUBDIVISION ARE "UNDERGROUND INSTALLATION". FOR LOCATION OF CABLES AND APPURTENANCES CONTACT THE PACIFIC TELEPHONE & TELEGRAPH CO.
2. NOTICE: ALL ELECTRICAL AND GAS SERVICES *WITHIN* THIS SUBDIVISION ARE "UNDERGROUND INSTALLATION". FOR LOCATION OF ELECTRICAL CABLES AND GAS PIPING AND APPURTENANCES, CONTACT SAN DIEGO GAS & ELECTRIC COMPANY.

STREET LIGHT NOTES

1. CONTRACTOR INSTALLING THE STREET LIGHTING DISTRIBUTION SYSTEM SHALL NOTIFY FIELD ENGINEER, , PHONE 236-5520 A MINIMUM OF 3 DAYS BEFORE BEGINNING OF WORK FOR APPROVAL OF CONDUIT LOCATION AND REQUIREMENTS.
2. CONTRACTOR SHALL VERIFY ALL STREET LIGHTS ARE BURNING AND NOTIFY FIELD ENGINEER, , PHONE 236-5520 A MINIMUM OF 4 WEEKS AFTER FINAL ELECTRICAL INSPECTION.

8 9500 LUMEN 100 WATT TYPE III HIGH PRESSURE SODIUM VAPOR WITH CUTOFF FIXTURE
3 16000 LUMEN 150 WATT TYPE III HIGH PRESSURE SODIUM VAPOR WITH CUTOFF FIXTURE AND TYPE XV STEEL STANDARD

SOILS REPORT

WILLIAM S. KROOSKOS & ASSOCIATES
REPORT DATED JULY 21, 1977
PROJECT No. 77-5343

STORM DRAIN ALTERNATES

ALTERNATE NO. 1: ASBESTOS CEMENT DRAIN PIPE, SPECIAL PROVISION P-21 SHALL GOVERN (A.C.P. SHALL BE 2000-D)

ALTERNATE NO 2: CAST IN PLACE CONCRETE PIPE, SPECIAL PROVISION P-16 SHALL GOVERN

REFERENCE DRAWINGS

OTAY MESA SEWER AND SAN YSIDRO SCHOOL DISTRICT WATER MAIN DWGS: 16864-1-D, 16864-2-D, AND 16864-3-D

WATER CONNECTIONS

CONNECTION NO. 1 - $2000.00

SITE DEVELOPMENT

GRADING - SHEETS 9 & 10
LANDSCAPING - SHEETS 9 & 11
IRRIGATION - SHEETS 9 & 11
EXCAVATION = 24,500 C.Y.
EMBANKMENT = 150,000 C.Y.
(IMPORT) = 125,500 C.Y.

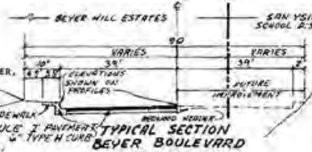

TYPICAL SECTION BEYER BOULEVARD
NO SCALE

WORK TO BE DONE

The Improvements consist of the following work to be done according to these plans and the Specifications and Standard Drawings of the City of San Diego.

SPECIFICATIONS

(1) Green Book Standard Specifications (1976 Ed.) Document No. 755163 filed May 10, 1976, and
(2) City of San Diego Standard Special Provisions, Document No. 756403, filed February 25, 1977.

STANDARD DRAWINGS

(1) City of San Diego Standard Drawings (1977 Ed.) Document No. 758672 filed March 21, 1977, and
(2) ( )* Denotes City of San Diego Standard Drawing per Document No. 735691, filed April 26, 1971.

IMPROVEMENTS	STD. DWG. NO.	SYMBOL
A.C. PAVEMENT	(G-58)* / (G-59-T)*	
TYPE "G" CURB	*G-2*	
PAVEMENT CUTOFF WALL	G-22	
CROSS GUTTER	G-12	
SIDEWALK	G-7	
PEDESTRIAN RAMP	SDG-101	
A.C. BERM	G-5	6" B-1
CONTROL MONUMENT (3)	(M-21-T)*	◉
DRIVEWAY	G-14	
2" A.C.		☒
SEWER MAIN (JOHNS-MANVILLE)	S-4, S-5	8" P.V.C.
SEWER CONCRETE MANHOLE	S-1, M-3 (SEE DETAIL SHT)	M.H.
4" PVC SEWER HOUSE CONNECTION	S-13	Ⓢ
CONCRETE CRADLE FOR SEWERS	S-6	
CUT OFF WALL	S-10	
WATER MAIN (TYLER FITTINGS JOHNS-MANVILLE)	W-21, W-17, W-18, W-20	8" A.C.
1" COPPER WATER SERVICE	(W-2)*, W-15-A2, (W-27)*	Ⓦ
GATE VALVE AND BOX *W/BYPASS 12"×16" G.V.* *GATE VALVE COVER ONLY*	*SDW-109*, W-11-A, W-12-B, (W-26)* *I-27*	8" G.V.
FIRE HYDRANT ASSEMBLY	W-10, W-11-A	F.H.
BLOW-OFF ASSEMBLY	SDW-102	B.O.
MULTI SERVICE FITTING	(W-60)*	
2" AIR VALVE	*(W-19)**	
STORM DRAIN	D-60	
CURB INLET TYPE B, B-1	D-2	
GRAVITY HEADWALL	D-32	
STORM DRAIN CLEAN OUT	D-9 D-10	
CONCRETE LUG	D-63	
WING TYPE HEADWALL	D-35	
CURB OUTLET A & B	D-25	
STREET NAME SIGN	SDM-102, SDM-103	■
STREET LIGHT SYSTEM	E-1, E-2, E-4	
BARRICADES AND GUARD POST	M-9	

MAINTAINING TRAFFIC. THE CONTRACTOR SHALL MAINTAIN ONE LANE OF TRAFFIC IN EACH DIRECTION DURING WORKING HOURS OF 8:30 AM TO 3:30 PM AND SHALL MAINTAIN FULL WIDTH OF TRAVEL LANES OF EXISTING ROADWAY DURING THE HOURS OF 3:30 PM AND 8:30 AM, ON SATURDAY, SUNDAY, AND DESIGNATED LEGAL HOLIDAYS, AND WHEN CONSTRUCTION OPERATIONS ARE NOT ACTIVELY IN PROGRESS ON WORKING DAYS THE CONTRACTOR SHALL MAINTAIN ALL TRAVEL LANES OF THE ROADWAY. ANY DEVIATION OF THESE REQUIREMENTS SHALL BE IN ACCORDANCE WITH SECTION 7-10.3 OF THE STANDARD SPECIFICATIONS.

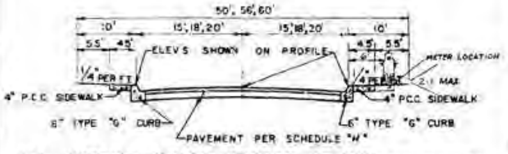

ALL INTERIOR TYPICAL STREET SECTION (NOT TO SCALE)

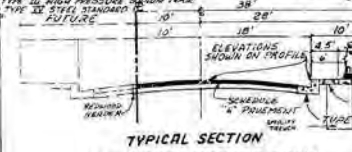

TYPICAL SECTION
BOUNDARY ENRIGHT DRIVE
NO SCALE

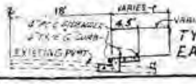

TYPICAL SECTION
EAST BEYER BLVD
NO SCALE

BENCH MARK

THESE PLANS ARE NOT TO BE USED FOR CONSTRUCTION UNTIL THE NOTICE TO PROCEED, OR A BONDED SUBDIVISION PERMIT HAS BEEN ISSUED BY THE CITY ENGINEER

"AS BUILT"

DATE:

PRIVATE CONTRACT

ENGINEER OF WORK
ASSOCIATED ENGINEERS
3968 GROTON STREET
SAN DIEGO, CALIF. 92110
PHONE (714) 224-2487

R.C.E. 25320

DATE

PLANS FOR THE PUBLIC IMPROVEMENTS
IN AND ADJOINING
BEYER HILL ESTATES

CITY OF SAN DIEGO, CALIFORNIA
SHEET *2* OF *17* SHEETS

T.M. 77-215
W.O. NO. 70772

C.E. *12-14-78*

AS BUILT

CONTRACTOR *ALLEN-HALL*
INSPECTOR *C.C. 'ERA/STAKE'*
DATE STARTED *3-16-79*
DATE COMPLETED *12-18-81*

192-1755

17793-1-D

1181

DATUM IS BELIEVED TO BE NGVD29. PLANS DATE = 1979

ALL ELEVATIONS ON THIS SHEET (CALCULATED AND ORIGINAL) ARE IN NGVD29

ELEVATIONS TO BE SHIFTED UPWARDS 2.3 FT FOR NAVD88

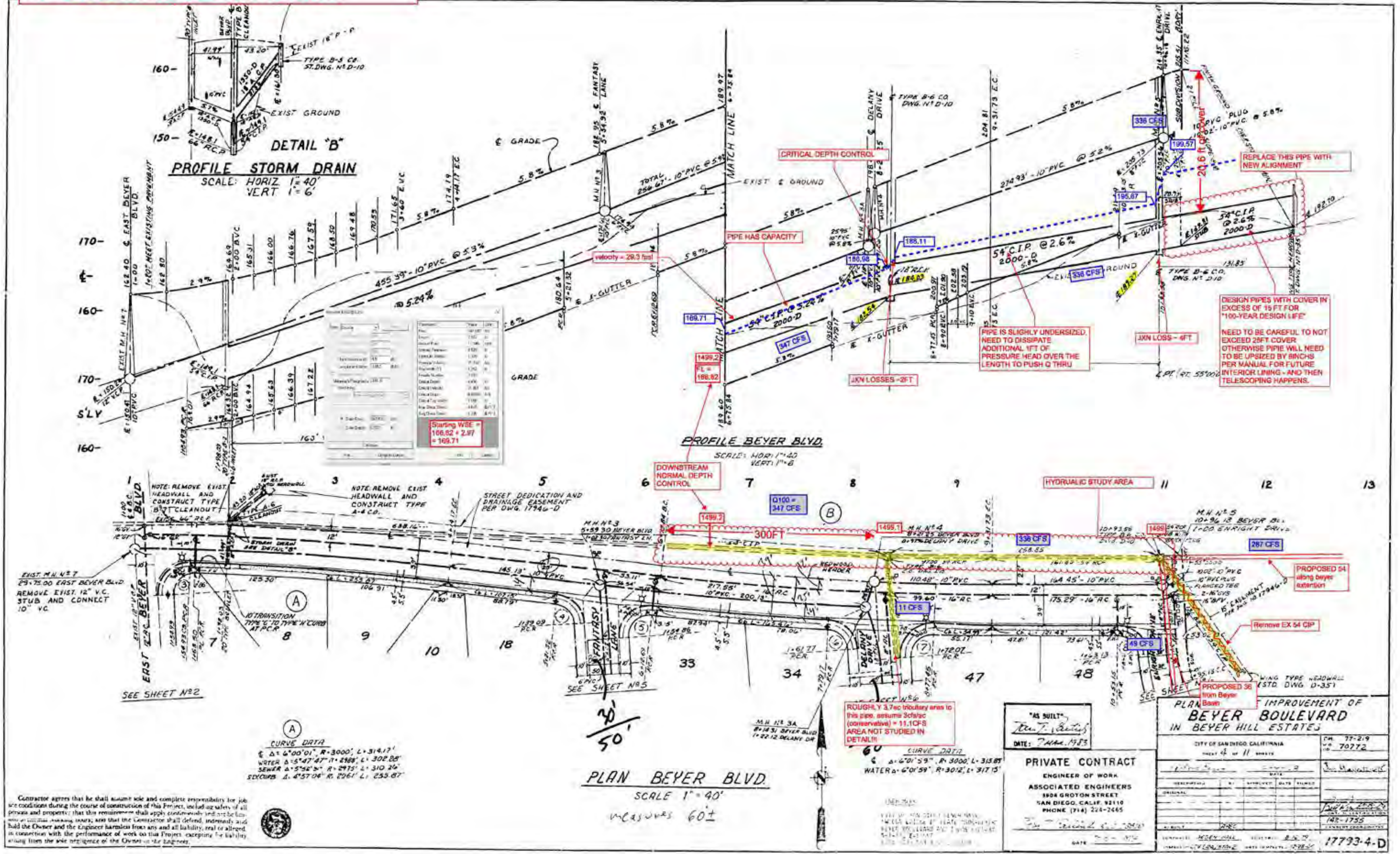

APPENDIX I

Moody Canyon Hydraulic Calculations

PROPOSED CULVERT BEYER BLVD

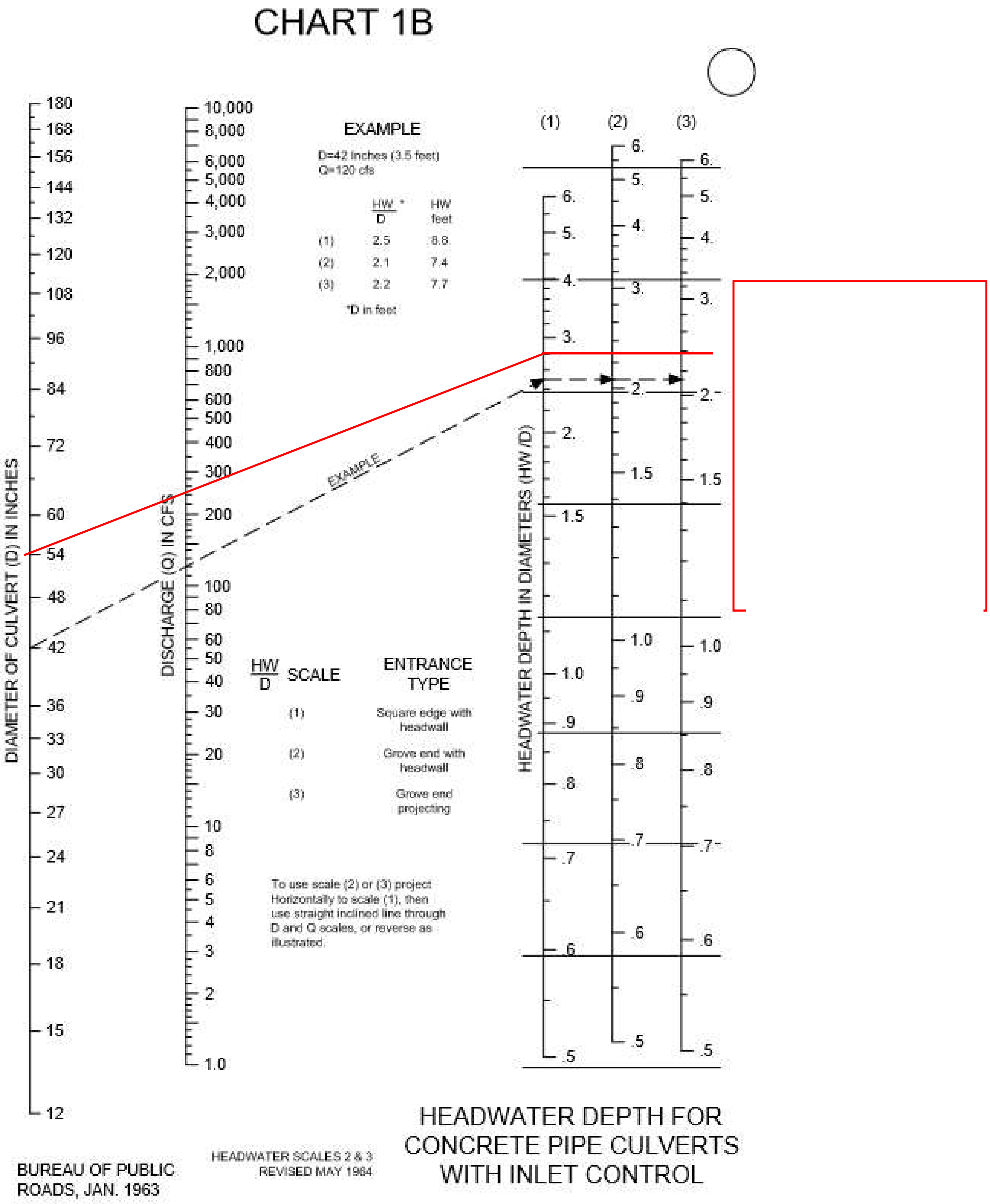

Figure E-1. Circular Culvert Nomograph (Chart 1B)

Hydraulic Analysis Report

Elevation (ft)	Elevation (ft)	Manning's n
100.00	100.00	0.0300
128.71	95.00	0.0300
148.60	90.00	0.0300
150.98	89.00	0.0300
164.25	90.00	0.0300
178.52	95.00	0.0300
197.10	100.00	-----

Project Data

Project Title: 15013C Southwest Village

Designer: EJS

Project Date: Thursday, December 15, 2022

Project Units: U.S. Customary Units

Notes:

Channel Analysis: CROSS SECTION 1420-1430

Notes:

Input Parameters

Channel Type: Custom Cross Section

Cross Section Data

Longitudinal Slope: 0.0400 ft/ft

Flow: 257.3000 cfs

Result Parameters

Depth: 1.8873 ft

Area of Flow: 24.3962 ft^2

Wetted Perimeter: 22.2095 ft

Hydraulic Radius: 1.0985 ft

Average Velocity: 10.5467 ft/s

Top Width: 21.7091 ft

Froude Number: 1.7533

Critical Depth: 2.4392 ft

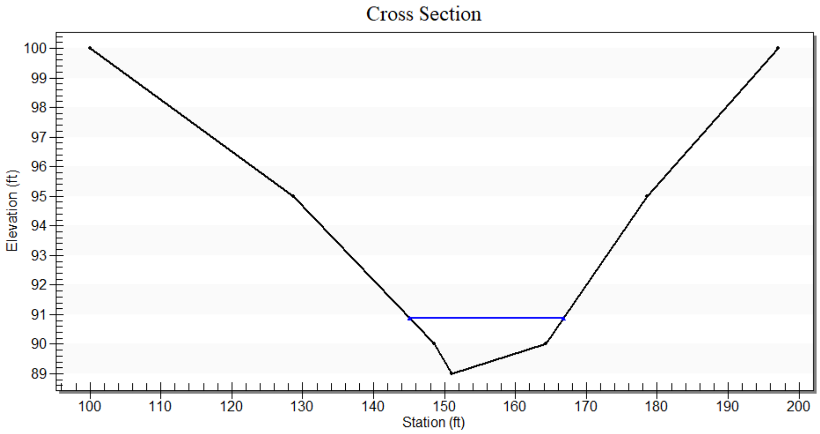

Critical Velocity: 6.8765 ft/s

Critical Slope: 0.0119 ft/ft

Elevation (ft)	Elevation (ft)	Manning's n
100.00	100.00	0.0300
131.10	95.00	0.0300
167.81	90.00	0.0300
175.17	88.00	0.0300
194.73	90.00	0.0300
203.81	94.00	0.0300
221.48	95.00	0.0300
247.29	100.00	-----

Critical Top Width: 25.48 ft

Calculated Max Shear Stress: 4.7108 lb/ft^2

Calculated Avg Shear Stress: 2.7418 lb/ft^2

Composite Manning's n Equation: Lotter method

Manning's n: 0.0300

Channel Analysis: CROSS SECTION 1410-1420

Notes:

Input Parameters

Channel Type: Custom Cross Section

Cross Section Data

Longitudinal Slope: 0.0400 ft/ft

Flow: 211.3900 cfs

Result Parameters

Depth: 1.8393 ft

Area of Flow: 22.7689 ft^2

Wetted Perimeter: 25.0970 ft

Hydraulic Radius: 0.9072 ft

Average Velocity: 9.2841 ft/s

Top Width: 24.7576 ft

Froude Number: 1.7061

Critical Depth: 2.2673 ft

Critical Velocity: 6.1344 ft/s

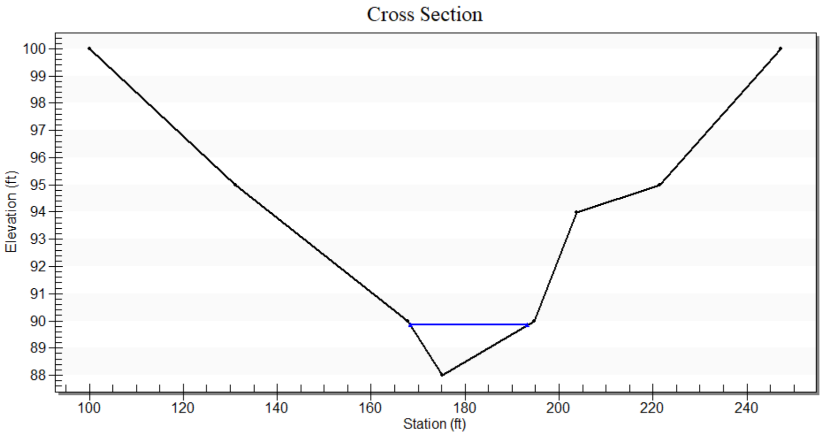

Critical Slope: 0.0127 ft/ft

Critical Top Width: 29.49 ft

Elevation (ft)	Elevation (ft)	Manning's n
100.00	100.00	0.0300
117.26	95.00	0.0300
135.66	90.00	0.0300
154.56	86.00	0.0300
206.33	86.00	0.0300
237.35	90.00	0.0300
262.64	95.00	0.0300
290.64	100.00	-----

Calculated Max Shear Stress: 4.5910 lb/ft^2

Calculated Avg Shear Stress: 2.2645 lb/ft^2

Composite Manning's n Equation: Lotter method

Manning's n: 0.0300

Channel Analysis: CROSS SECTION 1405-1410

Notes:

Input Parameters

Channel Type: Custom Cross Section

Cross Section Data

Longitudinal Slope: 0.0400 ft/ft

Flow: 137.7100 cfs

Result Parameters

Depth: 0.4493 ft

Area of Flow: 24.5216 ft^2

Wetted Perimeter: 57.4535 ft

Hydraulic Radius: 0.4268 ft

Average Velocity: 5.6159 ft/s

Top Width: 57.3776 ft

Froude Number: 1.5139

Critical Depth: 0.5888 ft

Critical Velocity: 4.2181 ft/s

Critical Slope: 0.0160 ft/ft

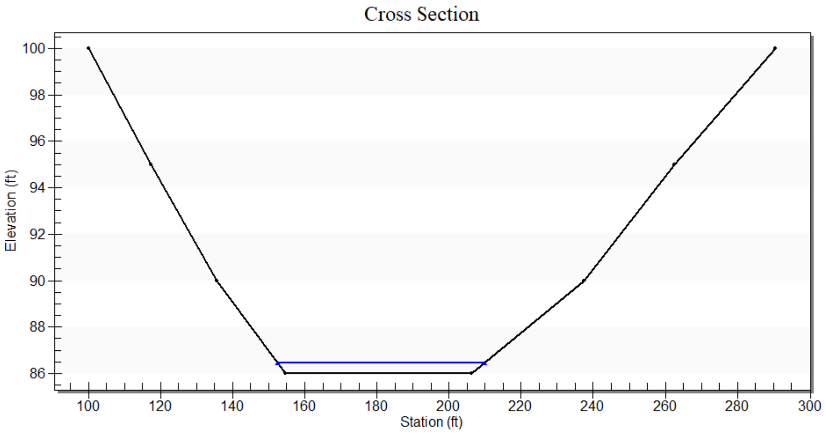

Critical Top Width: 59.12 ft

Calculated Max Shear Stress: 1.1215 lb/ft^2

Elevation (ft)	Elevation (ft)	Manning's n
100.00	100.00	0.0300
132.50	95.00	0.0300
165.25	91.00	0.0300
187.63	92.00	0.0300
220.27	95.00	0.0300
255.77	100.00	-----

Calculated Avg Shear Stress: 1.0653 lb/ft^2

Composite Manning's n Equation: Lotter method

Manning's n: 0.0300

Channel Analysis: CROSS SECTION 1404-1405

Notes:

Input Parameters

Channel Type: Custom Cross Section

Cross Section Data

Longitudinal Slope: 0.0400 ft/ft

Flow: 93.8400 cfs

Result Parameters

Depth: 0.9946 ft

Area of Flow: 15.1185 ft^2

Wetted Perimeter: 30.4845 ft

Hydraulic Radius: 0.4959 ft

Average Velocity: 6.2070 ft/s

Top Width: 30.4018 ft

Froude Number: 1.5511

Critical Depth: 1.1777 ft

Critical Velocity: 4.4649 ft/s

Critical Slope: 0.0155 ft/ft

Critical Top Width: 33.96 ft

Calculated Max Shear Stress: 2.4825 lb/ft^2

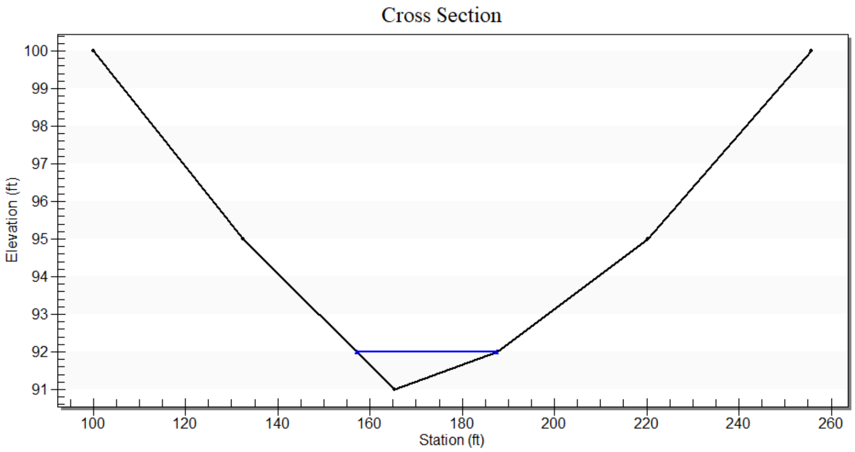

Calculated Avg Shear Stress: 1.2379 lb/ft^2

Composite Manning's n Equation: Lotter method

Elevation (ft)	Elevation (ft)	Manning's n
100.00	100.00	0.0300
128.08	95.00	0.0300
162.51	91.00	0.0300
168.52	90.00	0.0300
177.00	91.00	0.0300
203.62	95.00	0.0300
229.14	100.00	-----

Manning's n: 0.0300

Channel Analysis: CROSS SECTION 299-1410

Notes:

Input Parameters

Channel Type: Custom Cross Section

Cross Section Data

Longitudinal Slope: 0.0400 ft/ft

Flow: 87.1700 cfs

Result Parameters

Depth: 1.2838 ft

Area of Flow: 11.9721 ft^2

Wetted Perimeter: 19.0007 ft

Hydraulic Radius: 0.6301 ft

Average Velocity: 7.2811 ft/s

Top Width: 18.8217 ft

Froude Number: 1.6088

Critical Depth: 1.5511 ft

Critical Velocity: 4.9673 ft/s

Critical Slope: 0.0145 ft/ft

Critical Top Width: 22.90 ft

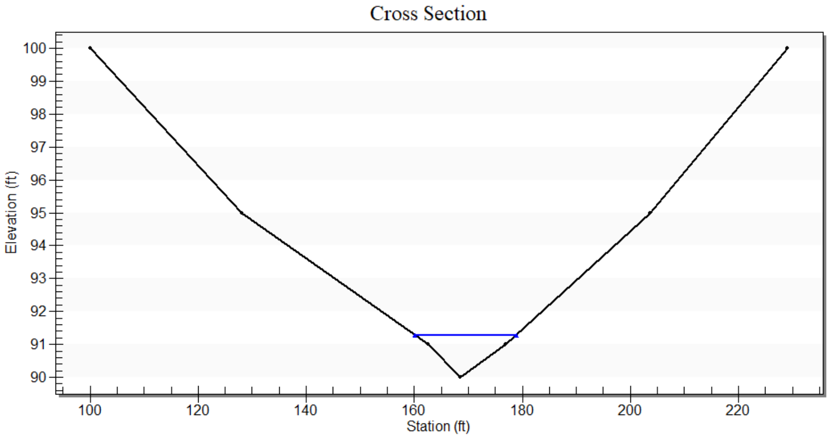

Calculated Max Shear Stress: 3.2044 lb/ft^2

Calculated Avg Shear Stress: 1.5727 lb/ft^2

Composite Manning's n Equation: Lotter method

Manning's n: 0.0300

Elevation (ft)	Elevation (ft)	Manning's n
100.00	100.00	0.0300
131.52	95.00	0.0300
158.88	90.00	0.0300
169.63	88.00	0.0300
187.25	88.00	0.0300
196.38	90.00	0.0300
201.21	91.00	0.0300
217.31	91.00	0.0300
231.96	95.00	0.0300
254.13	100.00	-----

Channel Analysis: CROSS SECTION 199-1405

Notes:

Input Parameters

Channel Type: Custom Cross Section

Cross Section Data

Longitudinal Slope: 0.0400 ft/ft

Flow: 40.2200 cfs

Result Parameters

Depth: 0.4045 ft

Area of Flow: 7.9414 ft^2

Wetted Perimeter: 21.7254 ft

Hydraulic Radius: 0.3655 ft

Average Velocity: 5.0646 ft/s

Top Width: 21.6443 ft

Froude Number: 1.4735

Critical Depth: 0.5176 ft

Critical Velocity: 3.8471 ft/s

Critical Slope: 0.0171 ft/ft

Critical Top Width: 22.77 ft

Calculated Max Shear Stress: 1.0095 lb/ft^2

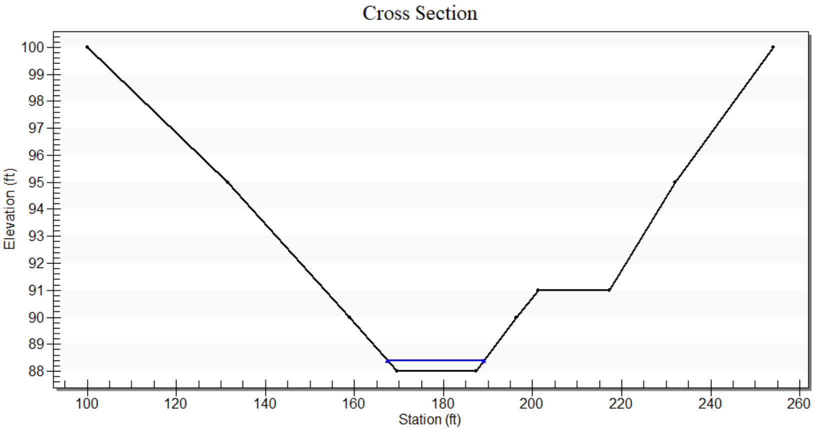

Calculated Avg Shear Stress: 0.9124 lb/ft^2

Composite Manning's n Equation: Lotter method

Manning's n: 0.0300

APPENDIX J

Technical Memorandum Addressing Hydrology and Water Quality for Emergency Access Road

RICK
ENGINEERING COMPANY

May 14, 2024

City of San Diego
Development Services
101 Ash Street
San Diego, California 92101

SUBJECT: SOUTHWEST VILLAGE – TECHNICAL MEMORANDUM ADDRESSING HYDROLOGY AND WATER QUALITY FOR EMERGENCY VEHICLE ACCESS ROAD "PROJECT ALTERNATIVE"
(RICK ENGINEERING COMPANY JOB NUMBER 15013-C)

1. Introduction

This letter report presents the existing and proposed hydrology and water quality analysis associated with the proposed emergency vehicle access road "Project Alternative" that runs north to south from the existing Jeep Trail to the United States Mexico border fence where it connects with the continuation of the Jeep Trail (herein referred to as the "project"). The project is adjacent to the Southwest Village project area. The Southwest Village project is a smaller portion of the overall community of Otay Mesa. Specifically, the Southwest Village project boundary is generally located south of State Route 905, east of Interstate 805, north of US-Mexico border, and immediately west of the northerly branch of Spring Canyon.

The proposed improvements for this "Project Alternative" include use of an existing jeep trail to serve as emergency vehicle access as a secondary access route into and out of the overall project limits. For much of the trail, the unimproved road is already established and traversable, however, there are locations which exceed 10% to 15% grades. Based on coordination with the project design team and local fire officials, it's our understanding that segments that exceed 10% should be paved, whereas the flatter segments can remain unpaved. The following sections of this memorandum address Drainage (aka Hydrology) and Water Quality considerations for this emergency vehicle access.

2. Drainage Characteristics, Methodology and Results (i.e. – "Hydrology")

As mentioned above, the emergency vehicle access road will generally follow the horizontal alignment of an existing jeep trail and will only be adjusted vertically as-needed to reduce the existing steep segments that are currently greater than 15% to be 15% or less. From a drainage perspective, the design will maintain existing drainage boundaries and flow patterns between existing and proposed conditions. To help illustrate the drainage characteristics, an exhibit has been prepared and the drainage boundaries are described as Basins 1, 2, and 3, for the extents of the EVA alignment that will connect from near the border fence at the south end to the development limits on the mesa (to the north). The overall existing condition of the project (Basin 1, 2, and 3) can be described as natural hills, canyons, and unpaved trails with grasses and sparce shrubbery. An overall existing percent impervious of 0% has been identified for Basins 1, 2, and 3, where little to no existing pavement is present. The proposed pavement for segments steeper than 10% will increase runoff slightly, however, the design maintains the existing drainage boundaries and patterns and allows for runoff to continue to sheet across the surrounding pervious areas for Basins 1 and 2, and will be conveyed via ditches in Basin 3 to an existing drainage collection facility in the Federal property adjacent to the border fence.

The rational method was used to approximate peak flow rates for Basins 1, 2, and 3 using guidance from the "City of San Diego Transportation & Storm Water Design Manuals Drainage Design Manual," January 2017 edition (herein referred to as The Drainage Design Manual). The 100-year storm event was used as the design storm event and a five-minute time of concentration was assumed in rational method calculations (which is conservative, actual times of concentration are likely a bit longer and result in lower corresponding intensities and peak flow rates. For the purposes of this comparison, it's been assumed that the entire segment of EVA road is paved within Basins 1, 2, and 3; whereas the current proposed approach would only pave the segments greater than 10%. Rational method results are shown below in Table 1.

Table 1: Existing and Proposed Hydrology for Emergency Vehicle Access

Drainage Basin #	**POI #**	**Project Condition**	**Percent impervious**	**Runoff Coefficient**	**Tributary Area**	**Intensity**	**100-year Flow Rates,**	**% Change in 100-yr Peak Discharge (Pre to Post)**
				C[1]	**A**	**I[2]**	**Q_{100}**	
			%		**(acres)**	**(in/hr)**	**(cfs)**	
1	1	Pre-project	0%	0.45	21.1	4.4	41.8	2%[3]
	1	Post-project	2%	0.46	21.1	4.4	42.5	
2	2	Pre-project	0%	0.45	5.4	4.4	10.7	4%[4]
	2	Post-project	4%	0.47	5.4	4.4	11.2	
3	3	Pre-project	0%	0.45	12.8	4.4	25.3	5%[5]
	3	Post-project	5%	0.47	12.8	4.4	26.7	

Notes:

1. Runoff coefficients were determined using Table A-1. Runoff Coefficients for Rational Method located in Appendix A of the Drainage Design Manual.
2. Intensity was determined based on a 100-year storm event and a 5-minute time of concentration for each basin. Figure A-1 Intensity-Duration-Frequency Design Chart in Appendix A of the Drainage Design Manual was used.
3. Basin 1 discharges to a sump within Basin 1's drainage boundaries. Although the 100-year peak discharge is shown to increase from Basin 1 it is anticipated that the surrounding area will see no increase in storm water runoff.
4. Basin 2 ultimately discharges to Basin 1. Although the 100-year peak discharge is shown to increase from Basin 2 it is anticipated that the surrounding area will see no increase in storm water runoff.
5. Basin 3 discharges to a sump near the existing Border Fence, to an existing drainage facility just east of the existing access road near the bottom of the steep slope. There will be slight increase in runoff to this location based on the proposed pavement, however, it will be conveyed via brow ditches down the steep segments and dissipated via riprap near the low points of each side of the road, prior to entering the existing drainage facilities. The increase is shown to be 5% without considering attenuation effects within the existing sump area and due to the existing drainage outlet works. This minimal increase is considered negligible.

The following describes each of the three (3) drainage basins in further detail:

In the existing condition, Basin 1, flows in a southwesterly direction to a low point located within Basin 1's drainage boundaries (POI-1). Basin 1 ultimately discharges to POI-1. In the proposed project condition Basin 1 will remain very similar to the existing project condition. The only improvement proposed in Basin 1 is a portion of paved emergency access road. This will slightly increase the percent impervious of Basin 1. All other drainage characteristics of Basin 1 will remain the same. It is anticipated that because Basin 1 discharges to a low point within its own drainage boundary proposed improvements to Basin 1 will not result in an increase of stormwater runoff to the surrounding area.

In the existing condition, Basin 2, flows in a southwesterly direction to a low point located within Basin 2 (POI-2). Basin 2 in the proposed project condition will remain very similar to the existing project condition. The only improvement proposed in the post-project condition of Basin 2 will be a portion of paved emergency access road. All other drainage characteristics of Basin 2 will remain the same. It is anticipated that in the 100-year storm event may overtop the local sump located at POI-2 and flow into Basin 1. Since runoff within Basin 2 is also contained within existing sump areas at POI-2 and POI-1, there is no net increase of runoff in the proposed condition from the project site in the event of a 100-year storm.

In the existing condition Basin 3 drains south before entering an existing drainage facility near the border fence (POI-3). The existing drainage facility appears to be hydraulically connected to a culvert which crosses the border. Drainage on the southside of the border makes its way westerly and connects into the Tijuana River. Based upon the available information, it is assumed that the runoff is conveyed via a system of storm drain and open channels to a concrete lined reach of the Tijuana River on the Mexican side of the border. In the proposed condition

Basin 3 will follow the same drainage pattern and discharge to POI-3. An increase of 1.4 cfs is anticipated at POI-3, which represents a 5% increase. This minor increase is considered negligible and is likely attenuated further within the existing sump and drainage outlet structure.

3. Water Quality Analysis, Methodology and Results

Basins 1 and 2 qualify as a singular self-mitigating DMA per section 5.2.1 of "The City of San Diego Stormwater Standards," last revised May 2021 (herein referred to as "The Storm Water Standards"). The impervious area within Basin 1 and 2 is 2 and 4 percent respectively of the surrounding drainage area from which runoff will dissipate across the existing pervious areas, which is less than the 5% allowable for self-mitigating areas. Furthermore, these areas do not discharge beyond the existing low points, so there is no concern for the discharge of pollutants from these two drainage basins.

Basin 3 discharges to POI-3. The amount of impervious area within this drainage basin is also at the 5% or less threshold to qualify for a self-mitigating DMA, however, the drainage is not able to surface discharge across large portions of the surrounding pervious areas as typically intended for self-mitigating DMAs. Due to the steep grades of the existing road, and the adjacent steep hillsides draining towards the roadway corridor, brow ditches have been proposed to help collect runoff from the roadway (and in some cases the surrounding hillside) and discharge it towards the south in the vicinity of the existing drainage collection facility. Riprap would be used at the end of the brow ditches on both sides of the improved roadway. The paving of this section is needed to provide emergency vehicle access which means the typical pollutants associated with a roadway are not expected to occur along this segment. The addition of permanent storm water BMPs is not very practical or feasible given the steep grades along the existing road alignment, nor at the low point as the property is not under the ownership of this project and is part of the federal ownership associated with the border fence. Due to these constraints, the lack of actual traffic and associated pollutants of concern, and the amount of impervious area is still equal to 5% or less, we recommend allowing this reach to remain untreated, whether it's categorized as a self-mitigating DMA or untreated DMA.

6. Conclusion

This letter report presents the existing and proposed hydrology and water quality analysis for the emergency vehicle access "project alternative" for the overall project. Peak flow rates for the 100-year storm event were determined using the Rational Method in conformance with the Drainage Design Manual. From a drainage or hydrological perspective, the change to peak flow rates are minimal in each of the three (3) drainage basins, estimated at less than 5% in each case, two of which are self-contained within existing low points and do not discharge from the site. From a water quality perspective, pollutants of concern are not anticipated to be present as they would for a normal use roadway. Stormwater runoff occurring within Basins 1 and 2 meet the criteria associated with self-mitigating DMAs since the amount of impervious area will be equal to or less than 5% of the overall drainage management area (DMA). The paved sections will runoff across pervious areas before eventually reaching the existing low points which do not discharge from the site. For Basin 3, the amount of impervious area is also equal to or less than 5% of the overall DMA, however, it has less opportunity to discharge across the surrounding pervious areas due to the steep hillsides draining towards the existing road alignment. Due to the physical constraints along this segment, the lack of actual traffic and associated pollutants of concern, and the amount of impervious area is still equal to 5% or less, we recommend allowing this segment to remain untreated, whether it's categorized as a self-mitigating DMA or untreated DMA. The eventual discharge from Basin 3 is collected near the border fence in an existing drainage structure, conveyed south into Mexico, and eventually outlets into the concrete-lined Tijuana River further west within Mexico.

The combined post project drainage map / drainage management area exhibit is included in Attachment 2 of this letter.

Please feel free to contact Eric Hengesbaugh or myself if you have any questions and/or concerns at (619) 291-0707.

Sincerely,

RICK ENGINEERING COMPANY

Brendan Hastie

Brendan Hastie, P.E.
R.C.E. #65809, Exp. 9/25
Principal

BH:EGH:vs/files/Report/15013-C.017

Attachment 1

Normal Depth Drainage Ditch and Storm Drain Sizing

Hydraulic Analysis Report

Project Data

Project Title: Drainage Conduit
Designer:
Project Date: Monday, May 13, 2024
Project Units: U.S. Customary Units
Notes:

Channel Analysis: West Type "A" Lined Ditch

Notes:

Input Parameters

Channel Type: Triangular
Side Slope 1 (Z1): 2.5000 ft/ft
Side Slope 2 (Z2): 2.5000 ft/ft
Longitudinal Slope: 0.1450 ft/ft
Manning's n: 0.0130
Flow: 10.4000 cfs

Result Parameters

Depth: 0.5023 ft
Area of Flow: 0.6307 ft^2
Wetted Perimeter: 2.7048 ft
Hydraulic Radius: 0.2332 ft
Average Velocity: 16.4897 ft/s
Top Width: 2.5114 ft
Froude Number: 5.7987
Critical Depth: 1.0145 ft
Critical Velocity: 4.0416 ft/s
Critical Slope: 0.0034 ft/ft
Critical Top Width: 5.07 ft
Calculated Max Shear Stress: 4.5446 lb/ft^2
Calculated Avg Shear Stress: 2.1098 lb/ft^2

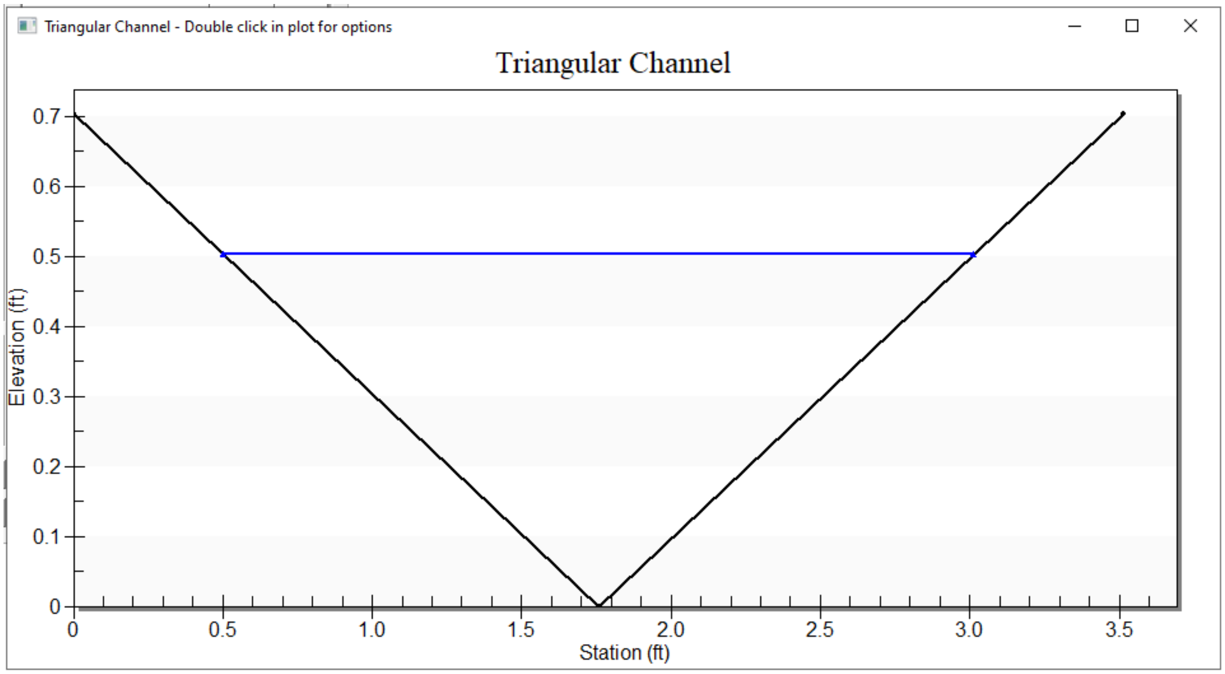

Runnoff from the 100-year storm event has been modeled and is shown as the blue line in the cross-section of the drainage ditch located west of the emergency evacuation route above. An 18-inch deep Type “A” lined ditch is proposed. Per “City of San Diego Standard Drawings for Engineering and Capital Improvement Projects Construction 2021 Edition.”

Channel Analysis: East Type "A" Lined Ditch

Notes:

Input Parameters

Channel Type: Triangular

Side Slope 1 (Z1): 2.5000 ft/ft

Side Slope 2 (Z2): 2.5000 ft/ft

Longitudinal Slope: 0.1450 ft/ft

Manning's n: 0.0130

Flow: 16.3000 cfs

Result Parameters

Depth: 0.5945 ft

Area of Flow: 0.8835 ft^2

Wetted Perimeter: 3.2013 ft

Hydraulic Radius: 0.2760 ft

Average Velocity: 18.4502 ft/s

Top Width: 2.9723 ft

Froude Number: 5.9639

Critical Depth: 1.2143 ft

Critical Velocity: 4.4216 ft/s

Critical Slope: 0.0032 ft/ft

Critical Top Width: 6.07 ft

Calculated Max Shear Stress: 5.3787 lb/ft^2

Calculated Avg Shear Stress: 2.4970 lb/ft^2

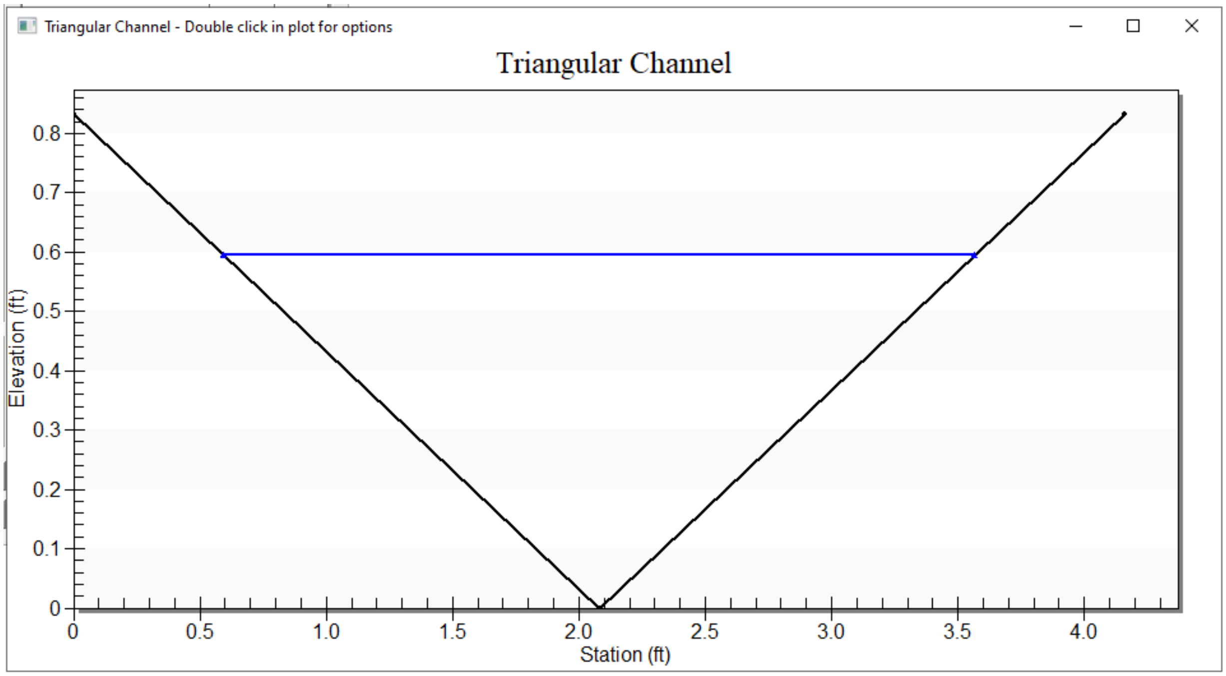

Runnoff from the 100-year storm event has been modeled and is shown as the blue line in the cross-section of the drainage ditch located east of the emergency evacuation route above. An 18-inch deep Type “A” lined ditch is proposed. Per “City of San Diego Standard Drawings for Engineering and Capital Improvement Projects Construction 2021 Edition.”

Channel Analysis: CrossEvacRoadSD

Notes:

Input Parameters

Channel Type: Circular

Pipe Diameter: 1.5000 ft

Longitudinal Slope: 0.0100 ft/ft

Manning's n: 0.0130

Flow: 10.4000 cfs

Result Parameters

Depth: 1.2161 ft

Area of Flow: 1.5347 ft^2

Wetted Perimeter: 3.3622 ft

Hydraulic Radius: 0.4565 ft

Average Velocity: 6.7765 ft/s

Top Width: 1.1751 ft

Froude Number: 1.0450

Critical Depth: 1.2400 ft

Critical Velocity: 6.6570 ft/s

Critical Slope: 0.0097 ft/ft

Critical Top Width: 1.14 ft

Calculated Max Shear Stress: 0.7589 lb/ft^2

Calculated Avg Shear Stress: 0.2848 lb/ft^2

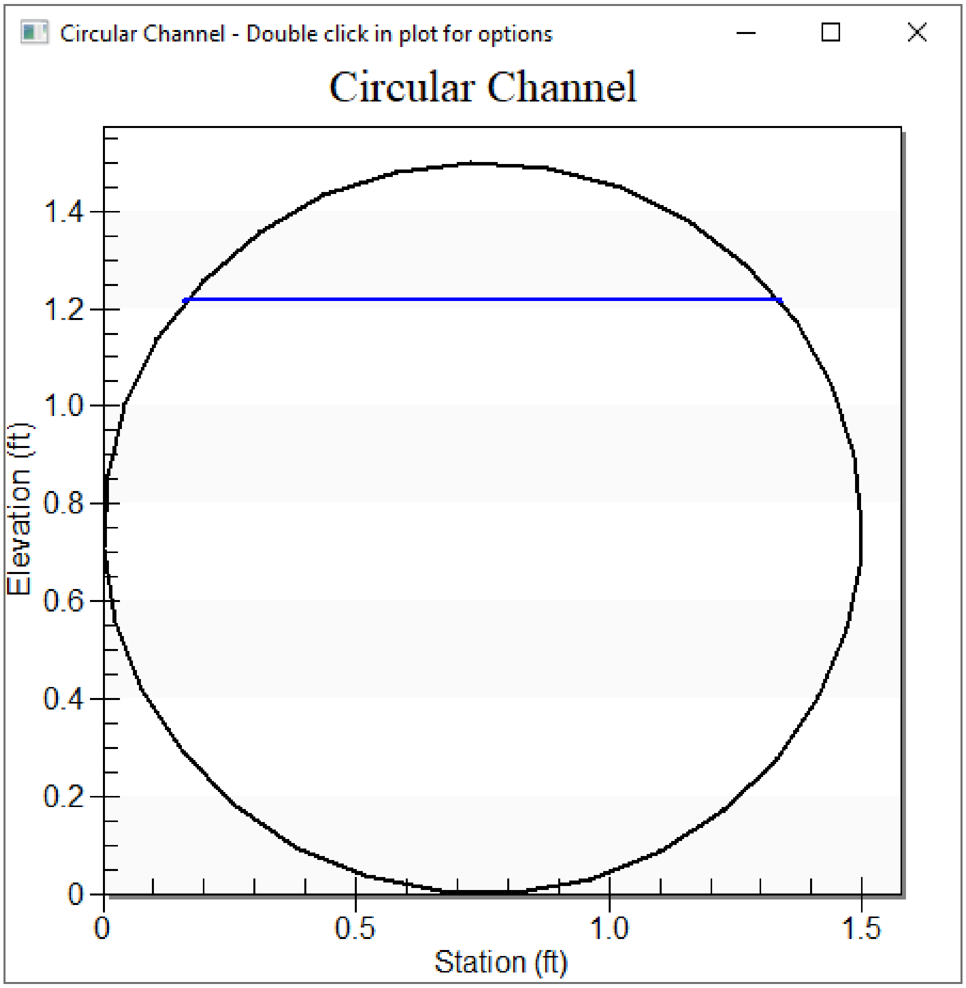

Runnoff from the 100-year storm event has been modeled and is shown as the blue line in the cross-section of the storm drain pipe which crosses the down stream end of the emergancy evacation route, flowing from west to east above. An 18-inch RCP is proposed.

Attachment 2

Post Project Drainage Map / Drainage Management Area Exhibit

(Combined Exhibit)

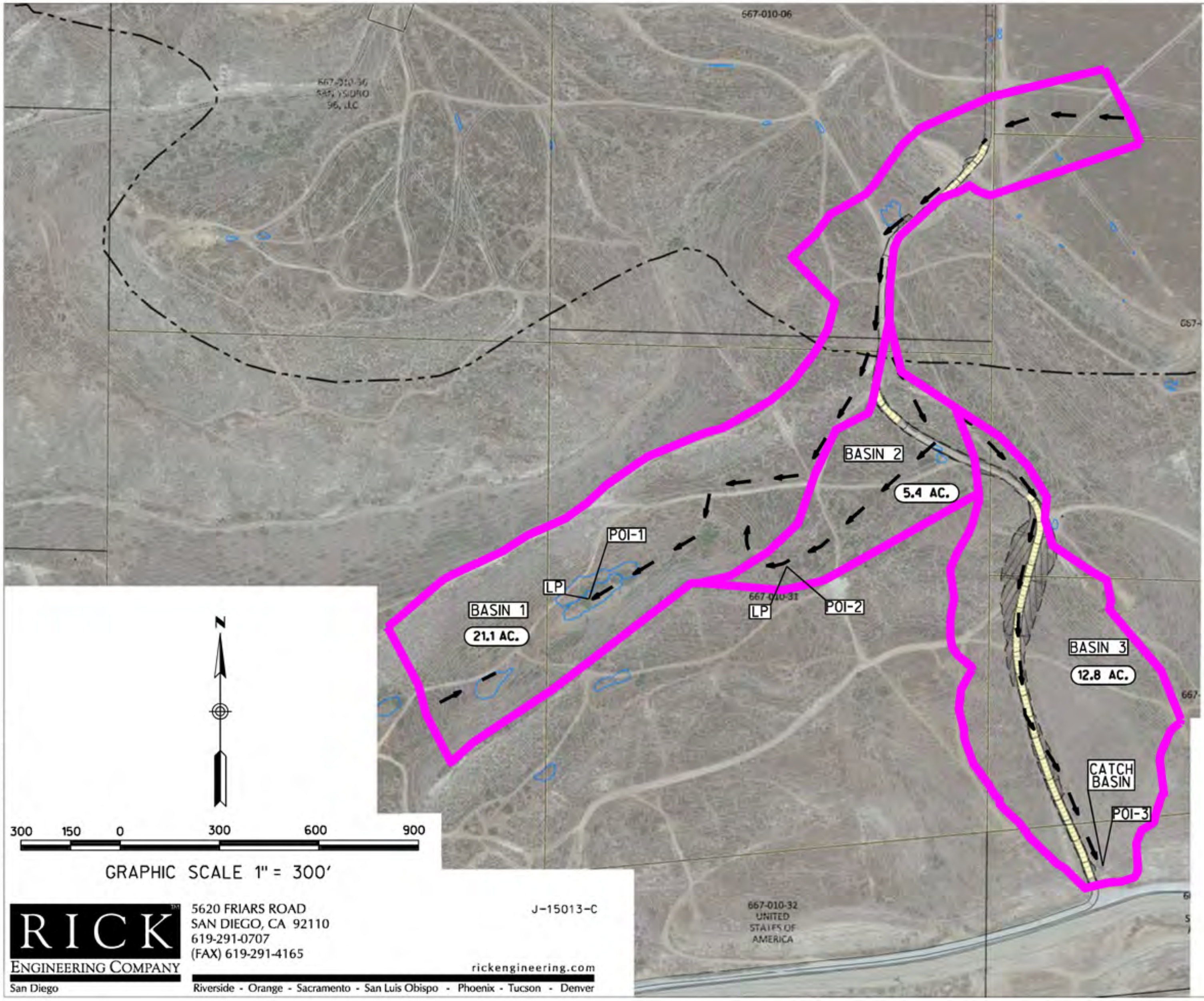

LEGEND

◎	POI
(XX.X AC.)	BASIN AREA
🟪	MAJOR BASIN BOUNDARY
↷	EXISTING SHALLOW SUMP OVERFLOW DIRECTION
→ –	FLOW PATH
🟨	POTENTIAL PAVING

NOTES

1. POI-1 IS LOCATED AT A SUMP WITHIN BASIN 1. THERE WILL BE NO NET RUNOFF DISCHARGING FROM BASIN 1.
2. POI-2 IS LOCATED AT A LOCAL SUMP WITHIN BASIN 2. DURING BIGGER STORM EVENTS IT IS ANTICIPATED THE POI-2 WILL DISCHARGE TO BASIN 1.
3. POI-3 IS LOCATED AT A CATCH BASIN WHICH DISCHARGES TO A CULVERT AND IS TRIBUTARY TO THE TIJUANA RIVER

EMERGENCY VEHICLE ACCESS
FOR
SOUTHWEST VILLAGE VTM
(POST-PROJECT)

J-15013-C Date: December 18, 2021

RICK
ENGINEERING COMPANY
San Diego

5620 FRIARS ROAD
SAN DIEGO, CA 92110
619-291-0707
(FAX) 619-291-4165

J-15013-C

rickengineering.com
Riverside - Orange - Sacramento - San Luis Obispo - Phoenix - Tucson - Denver

\\ap.rickeng.com\projects\C_SD_J\15013 - South Otay\WaterResources\EvacuationRoute\15013C_eht_EVARoute.dgn
\\ap.rickeng.com\projects\C_SD_J\15013 - South Otay\WaterResources\EvacuationRoute\SD CorpStds 2005.dscript
02-JAN-2024 14:57

NOT FOR CONSTRUCTION

MAP POCKET 1

Drainage Study Map
for
Southwest Village VTM
[Pre-project]

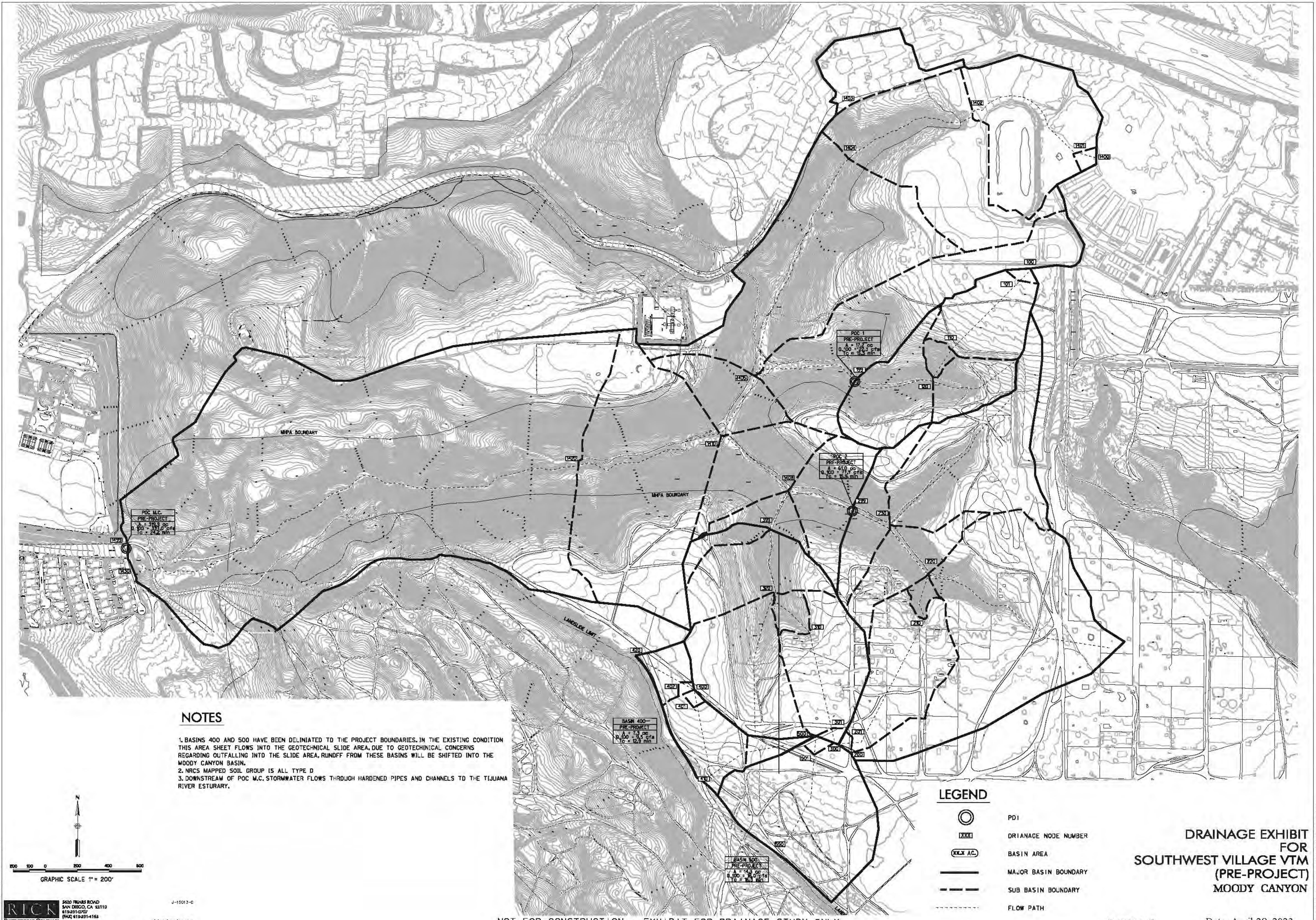

NOTES

1. BASINS 400 AND 500 HAVE BEEN DELINIATED TO THE PROJECT BOUNDARIES. IN THE EXISTING CONDITION THIS AREA SHEET FLOWS INTO THE GEOTECHNICAL SLIDE AREA. DUE TO GEOTECHINICAL CONCERNS REGARDING OUTFALLING INTO THE SLIDE AREA, RUNOFF FROM THESE BASINS WILL BE SHIFTED INTO THE MOODY CANYON BASIN.
2. NRCS MAPPED SOIL GROUP IS ALL TYPE D
3. DOWNSTREAM OF POC M.C. STORMWATER FLOWS THROUGH HARDENED PIPES AND CHANNELS TO THE TIJUANA RIVER ESTURARY.

LEGEND

◎	PDI
XXX	DRIANAGE NODE NUMBER
(XX.X AC.)	BASIN AREA
━━━	MAJOR BASIN BOUNDARY
━ ━ ━	SUB BASIN BOUNDARY
- - - - - -	FLOW PATH

DRAINAGE EXHIBIT
FOR
SOUTHWEST VILLAGE VTM
(PRE-PROJECT)
MOODY CANYON

J-15013-C

Date: April 28, 2023

NOT FOR CONSTRUCTION - EXHIBIT FOR DRAINAGE STUDY ONLY

RICK
ENGINEERING COMPANY
San Diego
5620 FRIARS ROAD
SAN DIEGO, CA 92110
619-291-0707
(FAX) 619-291-4165
rickengineering.com
Riverside - Orange - Sacramento - San Luis Obispo - Phoenix - Tucson - Denver

J-15013-C

MAP POCKET 2

Drainage Study Map
for
Southwest Village VTM
[Post-project]

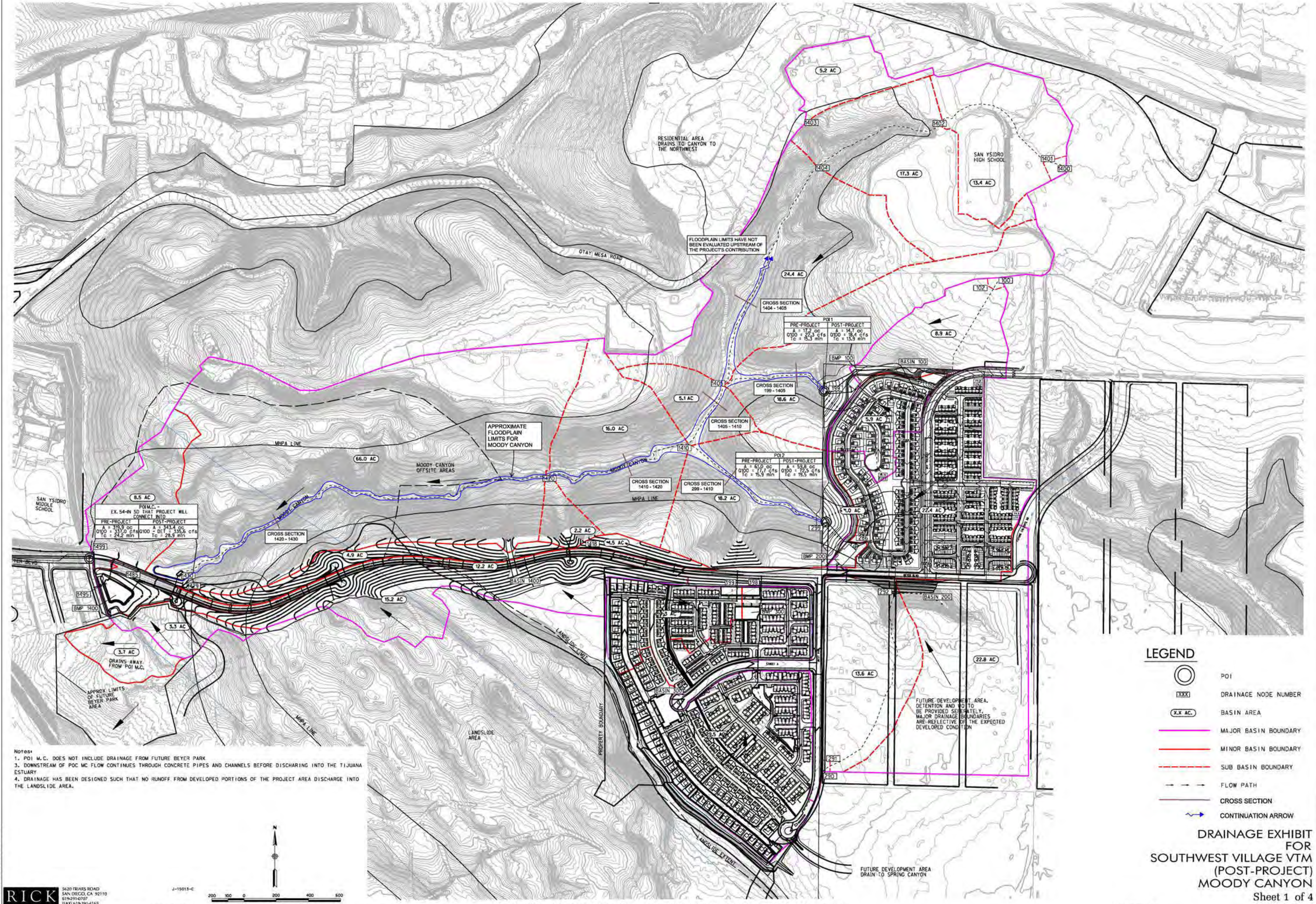

POI1	
PRE-PROJECT	POST-PROJECT
A = 17.2 ac Q100 = 22.3 cfs Tc = 15.3 min	A = 14.7 ac Q100 = 18.4 cfs Tc = 13.9 min

POI2	
PRE-PROJECT	POST-PROJECT
A = 61.0 ac Q100 = 77.7 cfs Tc = 15.9 min	A = 59.8 ac Q100 = 72.5 cfs Tc = 19.5 min

POI M.C. - EX. 54-IN SD THAT PROJECT WILL CONNECT INTO	
PRE-PROJECT	POST-PROJECT
A = 319.9 ac Q100 = 337.0 cfs Tc = 24.2 min	A = 343.4 ac Q100 - DET = 335.6 cfs Tc = 28.9 min

Notes:

1. POI M.C. DOES NOT INCLUDE DRAINAGE FROM FUTURE BEYER PARK
3. DOWNSTREAM OF POC MC FLOW CONTINUES THROUGH CONCRETE PIPES AND CHANNELS BEFORE DISCHARING INTO THE TIJUANA ESTUARY
4. DRAINAGE HAS BEEN DESIGNED SUCH THAT NO RUNOFF FROM DEVELOPED PORTIONS OF THE PROJECT AREA DISCHARGE INTO THE LANDSLIDE AREA.

LEGEND

◎	POI
[XXX]	DRAINAGE NODE NUMBER
(X.X AC.)	BASIN AREA
━	MAJOR BASIN BOUNDARY
━	MINOR BASIN BOUNDARY
╌	SUB BASIN BOUNDARY
→ → →	FLOW PATH
─	CROSS SECTION
⤳	CONTINUATION ARROW

DRAINAGE EXHIBIT
FOR
SOUTHWEST VILLAGE VTM
(POST-PROJECT)
MOODY CANYON

Sheet 1 of 4
April 28, 2023

J-15013-C

RICK ENGINEERING COMPANY
San Diego
5620 FRIARS ROAD
SAN DIEGO, CA 92110
619-291-0707
(FAX) 619-291-4165
rickengineering.com
Riverside - Orange - Sacramento - San Luis Obispo - Phoenix - Tucson - Denver
J-15013-C

NOT FOR CONSTRUCTION - EXHIBIT FOR DRAINAGE STUDY ONLY

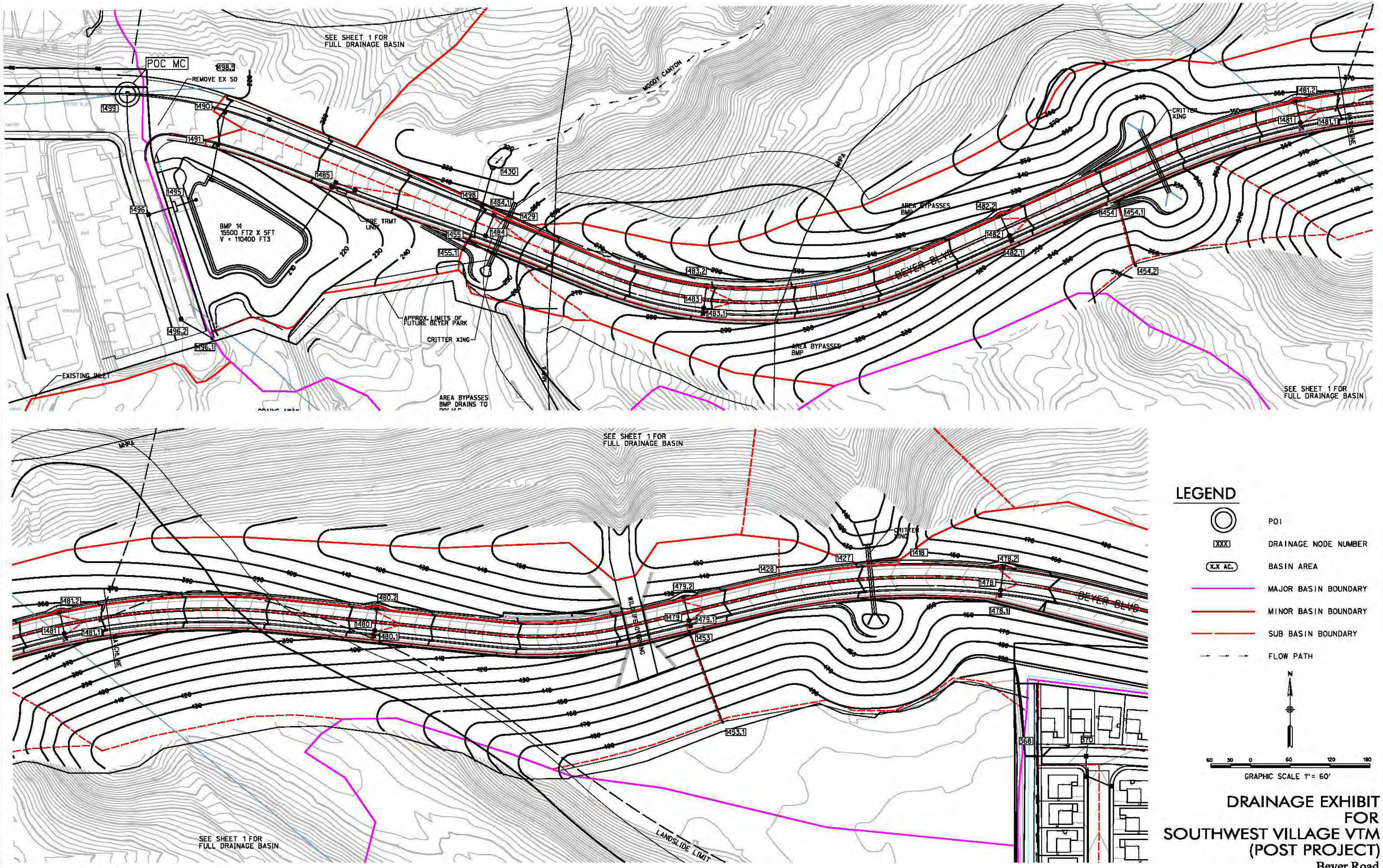

DRAINAGE EXHIBIT FOR SOUTHWEST VILLAGE VTM (POST PROJECT)

Beyer Road

Sheet 2 of 4

April 28, 2023

J-15013-C

NOT FOR CONSTRUCTION - EXHIBIT FOR DRAINAGE STUDY ONLY

RICK
ENGINEERING COMPANY
San Diego
5620 FRIARS ROAD
SAN DIEGO, CA 92110
619-291-0707
(FAX) 619-291-4165
rickengineering.com
Riverside - Orange - Sacramento - San Luis Obispo - Phoenix - Tucson - Denver

J-15013-C

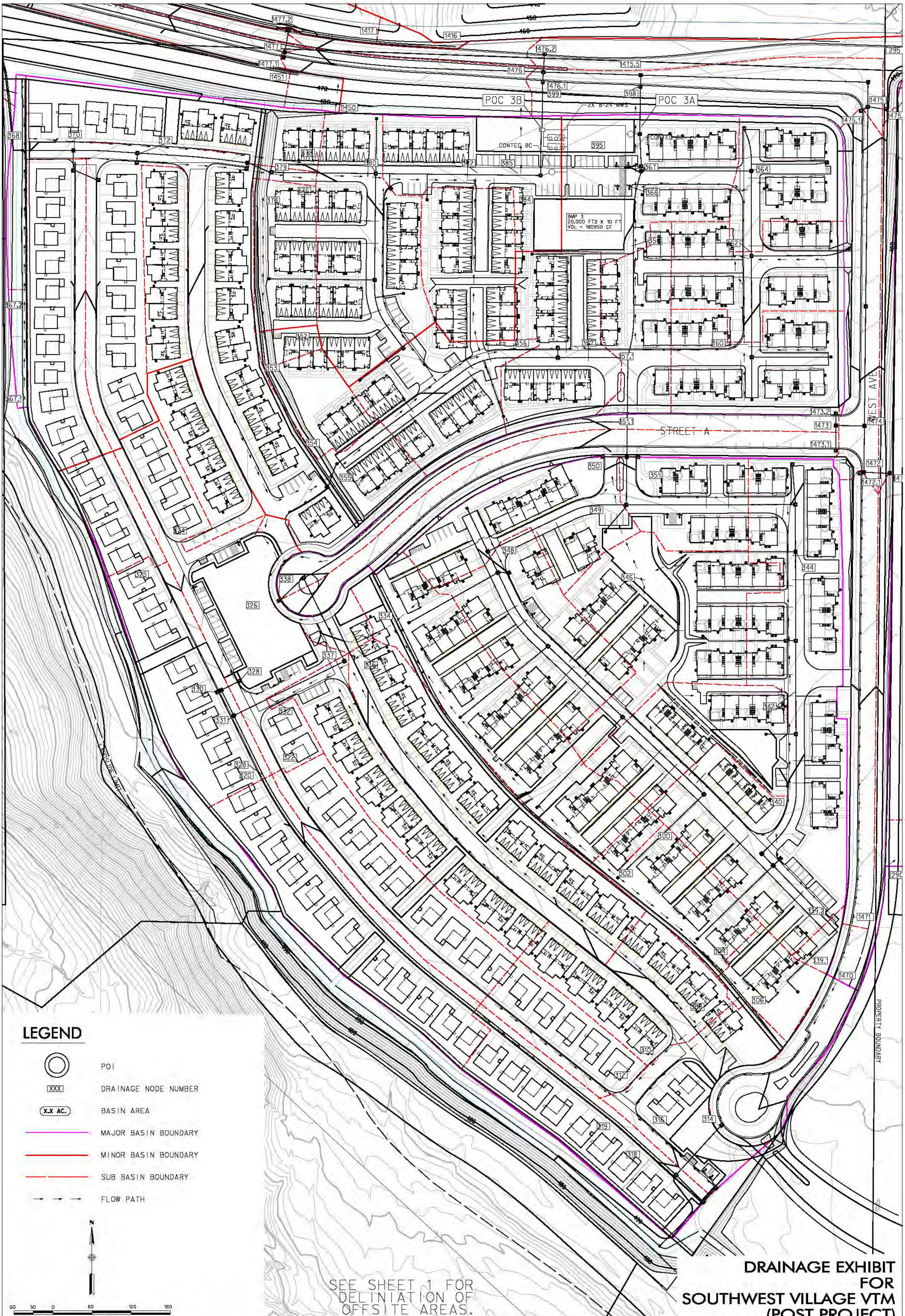

DRAINAGE EXHIBIT FOR SOUTHWEST VILLAGE VTM (POST PROJECT)

Sheet 3 of 4

BASIN 300
PA 10-14

April 28, 2023

J-15013-C

RICK
ENGINEERING COMPANY
San Diego

5620 FRIARS ROAD
SAN DIEGO, CA 92110
619-291-0707
(FAX) 619-291-4165

J-15013-C

rickengineering.com

Riverside - Orange - Sacramento - San Luis Obispo - Phoenix - Tucson - Denver

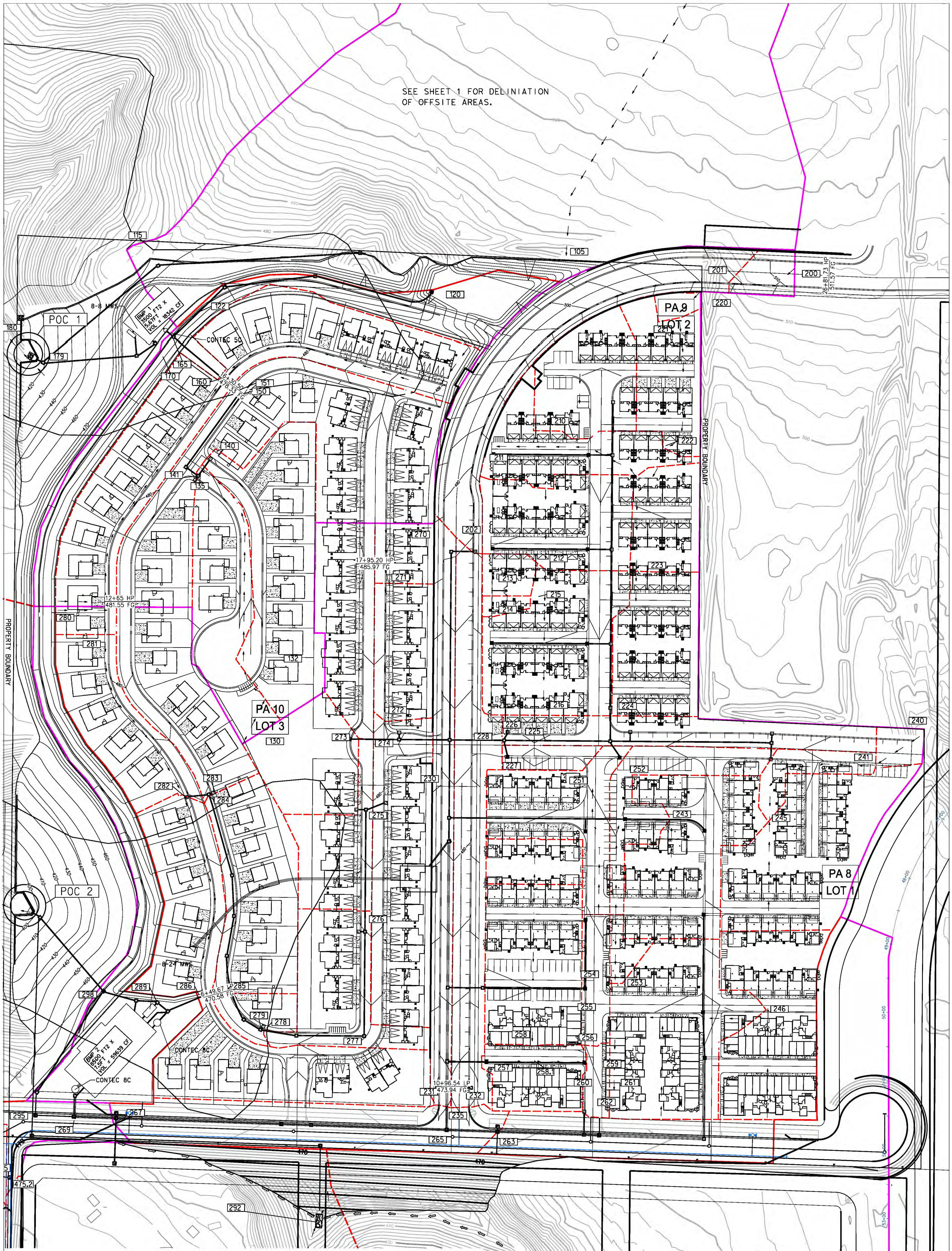

LEGEND

◎	POI
XXX	DRAINAGE NODE NUMBER
X.X AC.	BASIN AREA
▬	MAJOR BASIN BOUNDARY
▬	MINOR BASIN BOUNDARY
– – –	SUB BASIN BOUNDARY
→ → →	FLOW PATH

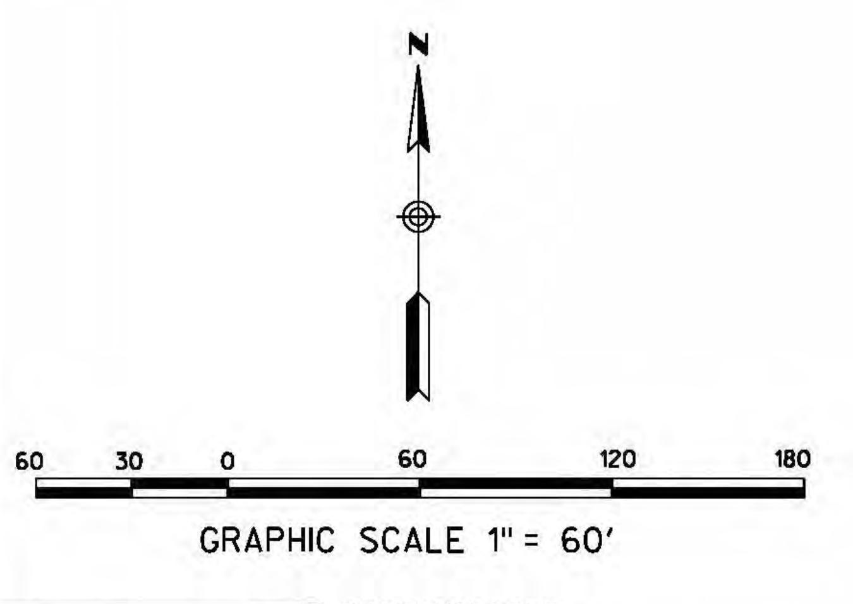

GRAPHIC SCALE 1" = 60'

RICK
ENGINEERING COMPANY
San Diego

5620 FRIARS ROAD
SAN DIEGO, CA 92110
619-291-0707
(FAX) 619-291-4165

rickengineering.com
Riverside - Orange - Sacramento - San Luis Obispo - Phoenix - Tucson - Denver

J-15013-C

DRAINAGE EXHIBIT
FOR
SOUTHWEST VILLAGE VTM
(POST PROJECT)

BASIN 100
& 200
PA 8-10

Sheet 4 of 4
April 28, 2023
J-15013-C

THIS EXHIBIT IS TAKEN FROM THE PDPSWQMP THAT ACCOMPANIES THE DRAINAGE STUDY. IT HAS BEEN INCLUDED TO CLEARLY IDENIFY ALL DIVERSIONS THAT WILL HAPPEN AS PART OF THE PROJECT.

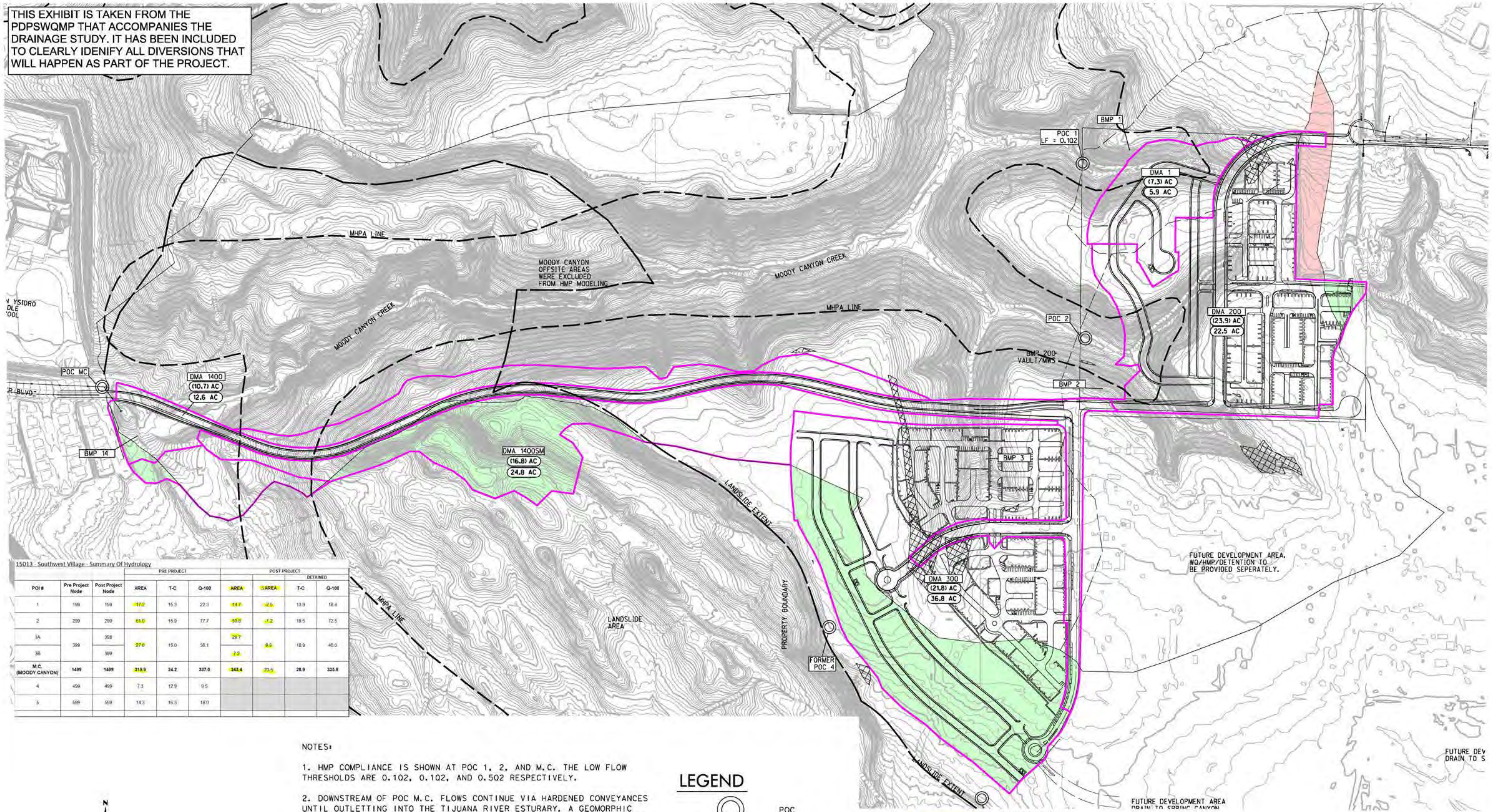

15013 - Southwest Village - Summary Of Hydrology

			PRE PROJECT			POST PROJECT			
								DETAINED	
POI #	Pre Project Node	Post Project Node	AREA	T-C	Q-100	AREA	ΔAREA	T-C	Q-100
1	199	199	17.2	15.3	22.3	14.7	-2.5	13.9	18.4
2	299	299	61.0	15.9	77.7	59.8	-1.2	18.5	72.5
3A	399	398	27.6	15.0	36.1	29.7	9.3	18.9	46.0
3B		399				7.2			
M.C. (MOODY CANYON)	**1499**	**1499**	**319.9**	**24.2**	**337.0**	**343.4**	23.5	**28.9**	**335.8**
4	499	499	7.3	12.9	9.5				
5	599	599	14.3	16.3	18.0				

NOTES:

1. HMP COMPLIANCE IS SHOWN AT POC 1, 2, AND M.C. THE LOW FLOW THRESHOLDS ARE 0.1Q2, 0.1Q2, AND 0.5Q2 RESPECTIVELY.

2. DOWNSTREAM OF POC M.C. FLOWS CONTINUE VIA HARDENED CONVEYANCES UNTIL OUTLETTING INTO THE TIJUANA RIVER ESTUARY. A GEOMORPHIC CHANNEL ASSESSMENT WILL BE PERFORMED AS PART OF FINAL ENGINEERING.

3. GEOTECHNICAL ENGINEERS HAVE DEEMED THAT PLACING STORM DRAIN OUTFALLS IN THE LANDSLIDE REGION IS UNFEASIBLE. THEREFORE A SIGNIFICANT DIVERSION WILL BE REQUIRED FOR AREAS THAT ARE SLATED FOR DEVELOPMENT THAT NATURALLY DRAIN INTO THAT AREA. THE FOUR BMPs PROPOSED AS PART OF THE PROJECT WORK TO OFFSET NEGATIVE IMPACTS DUE TO THE DIVERSION.

4. BASED ON THE SAN DIEGO REGIONAL MAPPING DOCUMENT, THERE IS A FEW POTENTIAL CRITICAL COURSE SEDIMENT YIELD AREAS THAT ARE IDENTIFIED WITHIN THE PROJECT AREA. WHERE THE PCCSYA EXISTS, A MORE DETAILED ANALYSIS MAY BE REQUIRED PRIOR TO OR DURING THE FINAL ENGINEERING (CONSTRUCTION DOCUMENT) STAGE TO ADDRESS THE REQUIREMENTS.

LEGEND

◎	POC	━	POST PROJECT MAJOR BASIN BOUNDARY
DMA 300	DMA ID	━	POST PROJECT MINOR BASIN BOUNDARY
(X,X AC)	BASIN AREA PRE PROJECT	🟩	DIVERSIONS INTO MOODY CANYON
X,X AC	BASIN AREA POST PROJECT	🟥	DIVERSIONS OUT OF MOODY CANYON
───	PRE PROJECT MAJOR BASIN BOUNDARY	▨	PCCSYA
— — —	PRE PROJECT MINOR BASIN BOUNDARY		

N

200 100 0 200 400 600

GRAPHIC SCALE 1" = 200'

HYDROMODIFICATION EXHIBIT FOR SOUTHWEST VILLAGE VTM

Sheet 1 of 1

J-15013-C

Date: April 28, 2023

RICK ENGINEERING COMPANY
San Diego
5620 FRIARS ROAD
SAN DIEGO, CA 92110
619-291-0707
(FAX) 619-291-4165
rickengineering.com
Riverside · Orange · Sacramento · San Luis Obispo · Phoenix · Tucson · Denver

J-15013-C

NOT FOR CONSTRUCTION - EXHIBIT FOR DRAINAGE STUDY ONLY

Attachment 6

Geotechnical and Groundwater Investigation Report

Attach project's geotechnical and groundwater investigation report. Refer to Appendix C.4 to determine the reporting requirements.

THIS PAGE INTENTIONALLY LEFT BLANK FOR DOUBLE-SIDED PRINTING

GEOTECHNICAL FEASIBILITY STUDY

SOUTH OTAY MESA PROPERTY
SAN DIEGO, CALIFORNIA

GEOCON
INCORPORATED

GEOTECHNICAL
CONSULTANTS

PREPARED FOR

PARDEE HOMES

SAN DIEGO, CALIFORNIA

OCTOBER 4, 2002

GEOCON
INCORPORATED

GEOTECHNICAL CONSULTANTS

Project No. 06847-42-01
October 4, 2002

Pardee Homes
12626 High Bluff Drive, Suite 100
San Diego, California 92130

Attention: Mr. John Arvin

Subject: SOUTH OTAY MESA PROPERTY
SAN DIEGO, CALIFORNIA
GEOTECHNICAL FEASIBILITY STUDY

Gentlemen:

In accordance with your request, we have performed a geotechnical feasibility study for the subject property. The investigation was performed as part of a due diligence study to identify overall site soil and geologic conditions, and potential geotechnical constraints that could impact development.

Based on the results of this study, it is our opinion that the site is feasible for development. Several conditions exist such as expansive soils, difficult excavation characteristics and a setback from a large landslide that will require special consideration for site development. The accompanying report presents the results of our study and preliminary conclusions and recommendations regarding the geotechnical aspects of site development.

Should you have questions regarding this report, or if we may be of further service, please contact the undersigned at your convenience.

Very truly yours,

GEOCON INCORPORATED

James L. Brown
GE 2176

REGISTERED PROFESSIONAL ENGINEER
JAMES L. BROWN
No. 002176
Exp. 6/30/05
GEOTECHNICAL
STATE OF CALIFORNIA

George Copenhaver

George C. Copenhaver
CEG 86

REGISTERED GEOLOGIST
GEORGE CALVIN COPENHAVER, JR.
#86
CERTIFIED ENGINEERING GEOLOGIST
11/30/03
STATE OF CALIFORNIA

GCC:JLB:dlj

(4/del) Addressee
(2) PBS&J
Attention: Mr.Craig Close

TABLE OF CONTENTS

TABLE OF CONTENTS (Continued)

GEOTECHNICAL FEASIBILITY STUDY

1. PURPOSE AND SCOPE

This report presents the findings of our geotechnical feasibility study for the proposed South Otay Mesa property located south of Old Otay Mesa Road and Highway 905 in San Diego, California (see Vicinity Map, Figure No. 1). The purpose of the investigation was to identify general site geology, examine the site soil conditions, define the upper boundary of a large landslide complex situated along the western and southern property boundary, and identify geotechnical constraints that may impact developing the property.

The scope of this study included review of stereoscopic aerial photographs, readily available published and unpublished geologic literature (see *List of References*) and a previous geotechnical report for a property immediately southwest of the site entitled *Intermodal Transportation Center, San Ysidro, California Geotechnical Investigation* prepared by Geocon Incorporated dated May 21, 2001. Also reviewed was *Exhibit 'A' South Otay Mesa Geotechnical Investigation*, a plan view of the site with proposed trench and boring locations and site access prepared by Project Design Consultants dated August 14, 2002 (Revision). A field investigation, laboratory testing and engineering analyses were also performed as part of our overall site evaluation.

The field investigation was performed between August 22 and September 3, 2002 and consisted of a site reconnaissance by an engineering geologist, geologic mapping, drilling of 7 large-diameter borings, and excavation of 29 backhoe trenches. The large diameter borings were excavated to examine the soil and geologic conditions immediately adjacent to the backscarp of the large landslide complex (the San Ysidro Landslide) that is located along the extreme western and southern edges of Otay Mesa. Exploratory trenches were scattered across the higher-elevation site-interior to further define the extent and thickness of surficial terrace deposit clays that typically cap Otay Mesa. Details of the field investigation as well as boring and trench logs are presented in Appendix A. Our field investigation was monitored by a biologist and archaeologist to direct ingress and egress and to establish exploratory boring and trench sites. A paleontologist was also present to observe formational soils encountered in the exploratory excavations for the potential presence of fossils.

Laboratory tests were performed on selected soil samples obtained during the field investigation to determine pertinent physical properties. Details of the laboratory testing and a summary of the test results are presented in Appendix B.

The base map used to depict the site soil and geologic conditions consisted of a copy of the *SANGIS* 2' contour topography from 1992 aerial photography, prepared by Project Design Consultants (see Figure No. 2, Map Pocket). The Geologic Map depicts existing topography, mapped geologic features, the approximate locations of exploratory excavations and the surveyed backscarp location of the landslide complex along the western and southern rim of the mesa.

2. SITE AND PROJECT DESCRIPTION

The irregularly-shaped site consists of approximately 300 acres of undeveloped, formerly cultivated farm land located in the Otay Mesa area east of San Ysidro and south of U.S. Highway 905 (see Vicinity Map, Figure No. 1). The site is situated south of the new San Ysidro High School and is bounded by undeveloped properties, or designated open-space to the west, south and east.

Topographically, the property is characterized by a large mesa with nearly flat to gently inclined ground surfaces at the higher elevations. Three steep-walled canyons named Moody Canyon, Dillon Canyon and Finger Canyon cut into the mesa and represent tributary drainages that empty into Tijuana River to the south and west of the site. Ground surfaces over much of the project area are smooth and essentially featureless because of cultivation and offroad vehicle disturbance over the years. Site elevations vary from a high of approximately 510 feet Mean Sea Level (MSL) along the northern mesa top, to a low of approximately 370 feet MSL in Finger Canyon in the southeastern portion of the site.

Vegetation types consist mostly of annual grassland, disturbed by numerous unimproved dirt roads used by local residents, off-road recreational vehicles, and the U.S. Border Patrol. Localized areas of native vegetation such as coastal scrub and vernal pool habitat have been mapped, and were avoided by this investigation by confining subsurface geotechnical excavations to previously disturbed roadways. Review of 1953 air photographs indicates the site was previously stripped of vegetation and has been seasonally cultivated. Existing man made improvements include several family dwellings in the north-central portions. An abandoned water well was noted near the southwestern project limits.

The above locations and descriptions are based on our site reconnaissance, review of published geologic literature and the above referenced studies. If property boundaries change from those shown on the Geologic Map, Geocon Incorporated should be contacted for review of plans and possible revisions to this report.

3. SOIL AND GEOLOGIC CONDITIONS

Soil and geologic conditions at the site were identified by a review of published and unpublished geologic literature for the general area, soil exposures noted during geologic mapping and observations of the subsurface explorations. Surficial soils encountered during the field investigation included undocumented fill, topsoil, alluvium and landslide debris. Geologic units include

Pleistocene-age Terrace Deposits, and the Tertiary-age San Diego and Otay Formations. Each of these units is described below and their approximate limits are depicted on the Geologic Map (Figure 2, Map Pocket).

3.1 Undocumented Fill (Qudf)

Undocumented fills exist mainly as elongate prisms of end-dump materials following the rims of Moody Canyon and Dillon Canyon in the north portions of the project area (see Figure 2). Another area was also mapped along the north edges of Finger Canyon. The fills are relatively thin (on the order of 5 feet or less) along the edges of the canyons, but appear to be much thicker where small tributary canyons or gullies have been filled. In upper Dillon Canyon area, for example, the fill appears to be on the order of 20 feet thick. The fills generally consist of loose, porous, clayey-sandy soil with abundant oversize concrete, asphalt, organic debris and trash. The undocumented fill in its present condition is not suitable for support of structural loading, fill and/or surface improvements. Undocumented fills within planned areas of grading will require complete removal and/or recompaction. Spreading the material and separating (picking) unsuitable materials will be required prior to placing as compacted fill.

3.2 Topsoil (unmapped)

A relatively thin layer of topsoil (typically on the order of 1 to 2 feet in thickness) blankets the natural mesa surface and is generally comprised of stiff, humid to damp, dark brown sandy clay or silty sand. The topsoil is compressible in its present condition and will require removal and recompaction within areas of planned development.

3.3 Landslide Debris (Qls)

A complex of deep-seated landslides has been mapped along the western and southern mesa rim by Tan (1995), the City of San Diego Seismic Safety Element (1995, Sheets 2 and 3) and by this study (see Geologic Map, Figure No. 2). This landslide complex, also known as the *San Ysidro Landslide*, is located west and south of proposed Future Development Limits as shown on the earlier referenced *Exhibit* 'A'. Seven large-diameter exploratory borings were located along the proposed Future Development Limits to verify the position of the landslide backscarp with the development limit. All borings were positioned at, or just inside the Future Development Limit boundary (see Geologic Map, Figure 2). After down-hole logging of each boring by an engineering geologist, all borings, without exception, were found to have encountered an intact, approximately horizontal succession of sedimentary strata. In general, the borings encountered Pleistocene-aged Terrace Deposits (Lindavista Formation), underlain by Tertiary-aged San Diego Formation and Otay Formation. This stratigraphic sequence and structure is very similar in elevation and location to that described in the same area by Kennedy and Tan (1977) and Tan (1995). Boring locations and the backscarp of the landslide were field surveyed to determine the precise location of the landslide with respect to the proposed development limit. The surveyed location of the landslide backscarp is shown on the Geologic Map (Figure 2, Map Pocket).

Down-hole logging indicated massive to horizontal, or approximately horizontal bedding of the sedimentary units. Exceptions were discontinuous foreset beds and cross-laminations of horizontally bedded sandstone members of the San Diego Formation (see Boring LB-5). Bedding plane shears, clayseams, adversely oriented fractures, continuous jointing or fracturing were not encountered in any of the borings.

In our opinion, landslides or landslide-related geologic structures should not adversely impact development east of the backscarp of the San Ysidro landslide. However, due to the relatively steep backscarp, a 50-foot building setback is warranted to provide a buffer zone in the event that surficial sloughages of the backscarp occur.

3.4 Alluvium (Qal)

Alluvium exists at or near the bottom of the major drainages of Moody Canyon, Dillon Canyon and Finger Canyon, and may extend into smaller canyon tributaries. Although no exploratory excavations were conducted in these major drainages, previous investigations in the Otay Mesa area indicate that alluvial deposits in tributary canyons can be on the order of 15 to 20 feet thick.

3.5 Terrace Deposits (Qtc and Qtg)

Terrace deposits that are stratigraphically similar to the Pleistocene-age Lindavista Formation cap the entire mesa (see Geologic Map, Figure 2). These deposits were encountered in all exploratory borings and trenches, and are divided on the geologic map into two members. The upper Terrace Deposit member consists of a highly expansive clay deposit designated as Qtc. A very dense, granular cobble conglomerate member (Qtg) underlies the clay. Each member is described below.

Terrace Deposit Clay (Qtc) was encountered in the majority of the exploratory trenches across the site. The clay encountered varied from 3 to 11 feet in thickness and consisted of stiff, moist, dark brown to olive clay. Trenches T-8, T-9, T-10 and T-28 encountered the greatest thicknesses in an elongate area in the southern half of the project. Figure 2 (Geologic Map) shows contoured thicknesses of clay based on mapping and the thickness encountered in each of the excavations. Expansion testing indicates the clay possesses highly expansive characteristics. The clay will require remedial grading in the form of removal and replacement with *low* expansive materials.

Terrace Deposit Gravel (Qtg) was encountered in all borings and trenches and consists of dense to very dense interbedded reddish brown sandy coarse gravel and gravelly sands, with some silt and clay. Large-diameter borings, with difficulty were able to penetrate this deposit and establish thicknesses ranging between 23 feet and 72 feet (see Boring Nos. LB-1 through LB-7). Down-hole logging of this unit revealed massive to horizontal bedding and approximately horizontal imbrication of gravel clasts and cobble layers. Interbedded horizontally laminated sand layers were also observed. Gravel clasts typically consisted of rounded to subrounded volcanic, metasedimentary and granitic rocks that varied in dimension from approximately 3 inches up to 2 feet. Differences in thickness of this unit are interpreted as ground surface variations and very irregular, disconformable, basal deposition scour-contacts with the underlying Tertiary-age formations.

Excavation of the Terrace Deposit Gravel required a very heavy effort with the drill rig during drilling and in some zones required the use of a rock core bucket to penetrate the deposit. Cobbles and boulders within the deposit generally increased in size with depth. In general, the upper 10 to 15 feet consisted of gravels less than 12 inches in dimension and contained zones with a relatively low percentage of cobble. This upper zone should provide good capping material. Deeper materials contained a much higher percentage of cobble and larger boulders. Excavation of this deposit will require a very heavy effort with conventional heavy-duty earth moving equipment. Larger than normal excavators may be required to excavate deeper utility trenches. Larger cobble and rock may require screening if placed near finish grade elevations.

3.6 San Diego Formation (Tsd)

Dense, light yellowish brown to gray-brown silty, fine micaceous sandstone with some thin interbedded conglomerate layers of the Pliocene-age San Diego Formation were encountered in borings LB-1, LB-2, LB-3, LB-5 and LB-7 immediately below the Pleistocene-age Terrace Deposit Gravel (Qtg) unit described above. Down-hole logging of the Qtg/Tsd contact in all of the foregoing borings indicated an irregularly horizontal depositional contact scoured into the generally finer-grained horizontally bedded sandstone of the San Diego Formation. The elevation of this disconformable contact varies between a low of approximately 430 feet MSL in boring LB-5 to a high of approximately 457 feet MSL in boring LB-7, with the average contact elevation at 442 feet MSL. The presence of interbedded, coarse subrounded volcanic conglomerate layers in borings LB-3, LB-4 and LB-5 is suggestive of a recently reported nonmarine facies of the San Diego Formation (Wagner, H. M., 2001). The San Diego Formation is suitable for support of structural fill and/or loading in its present condition.

3.7 Otay Formation (To)

Dense to hard, light olive to gray-brown, horizontally interbedded clayey siltstones, silty claystones and fine-grained sandstone of the Oligocene-age Otay Formation sandstone-mudstone member were encountered in borings LB-3, LB-4, LB-5 and LB-6 immediately below the Pliocene-age San Diego Formation. Down-hole logging of the contact with the San Diego Formation indicated a sharp, but irregular, depositional contact scoured into the generally finer-grained massive to horizontal beds of the Otay Formation. Remolded clayseams or adverse bedding plane features were not observed in any of the borings. Claystones observed in borings LB-3 and LB-6 were very hard and massive with significant silt (see Appendix A). Remolded and direct shear tests yield high strength values (see Appendix B). Some discontinuous, steep to vertical joints in borings LB-3 and LB-4 are also described. Potential adverse conditions for slope stability in the Otay Formation within planned development are negligible in the absence of shallow adverse bedding plane parallel clayseams. The Otay sandstone-mudstone member as encountered is very dense and is suitable for support of structural loads and/or fills in its present condition. The sandstone portions typically possess low expansion and good shear strength properties.

4. GROUNDWATER

No seeps, springs or groundwater conditions were observed or encountered during our site reconnaissance or during our field investigation. Dependant upon the time of year, water may accumulate in the major drainages. Dependent upon the time of year that development is initiated, some dewatering may be required in order to accomplish remedial grading. Groundwater is not anticipated to adversely impact development of the property.

5. GEOLOGIC STRUCTURE

Bedding and formational contact attitudes observed and/or measured during the investigation are mostly horizontal, exceptions being localized undulations and cross`-laminations within a horizontally bedded unit. The coarse conglomeratic portions of the Terrace Deposit Gravel (Qtg) are typically massive with few discernible attitudes, other than approximately horizontal imbrication of conglomerate clasts. Adverse geologic structures, based on observations of the exploratory excavations, do not present a significant hazard to development. However, during grading, cut slopes should be evaluated by an engineering geologist to confirm the presence or absence of adverse bedding plane shears.

Review of the City of San Diego, Seismic Safety Study, Geologic Hazards and Faults, 1995 edition indicates the site is designated in Geologic Hazard Category 53. Category 53 is described as Other Terrain, level or sloping terrain, unfavorable geologic structure, low to moderate risk

6. GEOLOGIC HAZARDS

6.1 Faulting and Seismicity

No active faults or potentially active faults are known to exist on the site. Our reconnaissance mapping, subsurface evidence obtained from the exploratory excavations and a review of published geologic maps and reports indicate that the site is not located on any known *active* fault trace. A southern strand of the potentially active La Nacion fault is mapped approximately 1 mile west of the site on the City of San Diego Seismic Safety Study. Projection of the strike of this fault does not extend closer than one mile from the site. Also earlier mapping by Kennedy and Tan (1977) showed conjectural northwestern-striking splinter faults extending southeastward form the La Nacion Fault and buried beneath the San Ysidro landslide complex. These also do not extend onto the site and may represent secondary backscarps of the landslide complex. The Rose Canyon Fault is the nearest active fault, located approximately 13 miles west of the site.

The distance of known active faults to the site was determined from the computer program EQFAULT (BLAKE, 1989a, updated 2,000). Principal references used by EQFAULT in selecting faults to be included were Jennings (1994), Anderson (1984) and Wesnousky (1986). The program also estimates ground accelerations at the site for the maximum seismic event. Attenuation relationships by Geomatrix (1994) were used in the analysis.

Within a search radius of 62 miles (100 kilometers) from the site, 13 known active faults were identified. The results of the deterministic analyses indicate that the Rose Canyon Fault is the dominant source of potential ground motion at the site. Earthquakes having a maximum earthquake Magnitude of 6.9 are considered to be representative of the potential for seismic ground shaking within the site (from this fault). The "maximum credible earthquake" is defined as the maximum earthquake that seems possible of occurring under the presently known tectonic framework (California Division of Mines and Geology Notes, Number 43). The estimated maximum peak ground acceleration from the Elsinore-Julian and Elsinore-Temecula Faults is approximately 0.19 g. Presented on Table 6.2 are the earthquake events and site accelerations based on attenuation relationships of Sadigh, *et al.*(1997) for the faults considered most likely to subject the site to ground shaking.

TABLE 6.2
MAXIMUM EARTHQUAKE MAGNITUDE AND PEAK SITE ACCELERATIONS

Fault Name	Distance From Site (miles)	Maximum Earthquake Magnitude	Peak Site Accelerations
Elsinore – Temecula	31	6.8	0.07
Elsinore – Julian	26	7.1	0.11
Newport – Inglewood (Offshore)	28	6.9	0.09
Rose Canyon	13	6.9	0.19
Earthquake Valley	32	6.5	0.06
Coronado Bank	26	7.4	0.13

The site could be subjected to moderate to severe ground shaking in the event of a major earthquake on any of the above listed faults, or other regional active faults in the southern California area. Structures for the site should be constructed in accordance with current UBC seismic codes and local ordinances.

6.2 Liquefaction

Liquefaction is limited to granular soil deposits located below the groundwater table which are in a relatively loose, unconsolidated condition that are subjected to ground accelerations from a large earthquake. Liquefaction is typified by a complete loss of shear strength within the deposit due to a very rapid buildup in pore water pressures where the soil behaves as a liquid rather than a solid. Impacts associated with liquefaction include surface rupture, sand boils and settlement.

Since loose surficial deposits will be removed and recompacted, and subdrains will be installed within canyon drainages to prevent the buildup of groundwater, liquefaction potential for these deposits is considered to be very low. The very dense relatively dry nature of the geologic units on site precludes liquefaction from occurring in these deposits.

7. CONCLUSIONS AND RECOMMENDATIONS

7.1 General

7.1.1 No soil or geologic conditions were encountered during our field investigation, or noted in our geologic review that would preclude the development of the property. Preliminary recommendations for grading and remediation of geotechnical constraints are provided herein.

7.1.2 It is recommended that additional geotechnical studies be performed as development plans become more finalized. The additional studies can better define depths of remedial grading and provide more soil and geologic information specific to the proposed development.

7.1.3 Several conditions were encountered that will require special consideration during grading. These conditions are considered constraints either from a soil and geologic perspective or economic considerations (i.e., increased grading costs). The constraints identified from this study are compressible deposits, highly expansive Terrace Deposit clays, difficult excavation characteristics of Terrace Deposit gravels and a very large landslide complex along the west and southern rim of the mesa. Each constraint is discussed below.

7.2 Geotechnical Constraints

7.2.1 *Compressible Deposits*. Soil deposits that are loose and compressible have been identified at several locations across the site. These deposits include undocumented fill (Qudf), alluvium (Qal) and topsoil. Complete removal and recompaction of these materials will be required in areas intended to support structural improvements. Spreading and removal of unsuitable debris (construction debris and trash) within the undocumented fills will be required prior to compaction.

7.2.2 *Highly Expansive Terrace Clay (Qtc) Deposits*. Highly expansive clays of the upper portion of the Terrace Deposit exist across the site. Trench excavations indicate that the clay varies in thickness from approximately 3 feet to 11 feet. The clay thickness generally tends to increase from north to south. The Geologic Map (Figure 2, Map Pocket) shows contours of clay thickness as well as the thickness at each trench location. Laboratory expansion index (EI) testing yielded results varying from 91 to 120. These materials are not recommended to be within 5 feet of finish grade elevations as they are expansive enough to result in soil heave and subsequent distress. Remedial grading in the form of mining the underlying sands and gravels and burying the clays and/or mixing with the sand and gravel to result in an acceptable finish grade EI will be required. Mixing of the underlying Terrace Gravels at an approximate 50/50 ratio resulted in EI values varying from 28 to 87. This will require a substantial amount of remedial grading and should be accounted for when establishing a site grading budget.

7.2.3 *Difficult Excavation of Terrace Gravel (Qtg).* Terrace gravel deposits that underlie the clay consist of dense to very dense, cobble conglomerate with the percentage of gravel and size of cobbles and boulders increasing with depth. Excavations that extend into the larger cobble and higher percentage gravel and cobble zones will require a very heavy excavation effort (based on difficulty encountered during drilling and trenching). Deep utility excavations may require the use of a larger excavator (such as a Caterpillar 375) to efficiently dig the deposit. Mine areas to generate low expansive soils, if extended to the large cobble zones will require deep ripping with a large bulldozer (D9 or larger). In addition, larger cobbles and boulders (greater than 12 inches) should not be placed within 3 feet of finish grade.

7.2.4 *Large Landslide Complex.* A very large, well known and publicized landslide complex is situated along the entire west and south rim of the mesa. This landslide complex is so large that mitigation would require significant additional studies as well as grading to define the geometry, evaluate stability and to stabilize the slide mass. One of the primary purposes of this study was to accurately define the backscarp of the landslide for purposes of establishing the maximum amount of developable area on the mesa. Borings were situated as close as possible to a proposed development limits line based on previous mapping. The borings were advanced to demonstrate that beyond the landslide backscarp, intact sedimentary bedrock units exist (i.e. stable soil conditions). In addition, during the field investigation, the backscarp was mapped in detail and surveyed to determine an accurate location. Results of the borings, mapping and surveying are shown on the Geologic Map where the surveyed landslide backscarp is plotted. Along the majority of the mesa rim, the surveyed location is at or slightly to the west of the original estimated development limits line.

Cross Section A-A' was generated to perform a global stability analysis of the landslide complex. Basal landslide geometry was obtained from boring and stability analysis information associated with the Intermodal Transportation Facility southwest of the site. The cross section was extended onto the mesa rim to encompass the entire width of the landslide. The analysis indicated a minimum factor of safety of 1.28 with the failure surface approximately 2,000 feet to the west of the mesa rim (results are shown on Figure 3). Additional analyses indicated that for failure surfaces closer to the site, higher factors of safety resulted due to more soil resistance from the larger soil mass. Although the factor of safety is less than 1.5, it indicates that additional global movement (entire slide mass) should not occur such that adverse impacts to the mesa exist. However, due to the very steep backscarp at the mesa rim, we recommend that a 50-foot building setback from the surveyed location be established to provide a buffer zone in the event of surficial instability of the backscarp.

7.3 Soil and Excavation Characteristics

7.3.1 The soil conditions encountered varied from highly expansive clays of the upper Terrace Deposit clay (Qtc) to very low expansive sands and gravels of the Terrace Deposit gravels (Qtg) and sandstone of the San Diego Formation.

7.3.2 It is anticipated that the surficial deposits (undocumented fill, alluvium and topsoil) and the Terrace Deposit clay can be excavated with a light to moderate effort with conventional heavy duty grading equipment. Heavy to very heavy effort is anticipated to efficiently excavate the deeper Terrace Deposit gravels.

7.3.3 Water-soluble sulfate testing was performed on representative samples of the soil and geologic units encountered at the site. The test results indicate that the Terrace Deposit clay has a sulfate content indicative of a sulfate exposure varying from *negligible* to *severe* based upon Table 19-A-4 of the 1997 Uniform Building Code (UBC). Remaining samples tested (Terrace Gravels) yielded soils with a *negligible* sulfate exposure. It should be noted that the presence of water-soluble sulfates is not a visually discernible characteristic. Therefore, other soil samples from the site could yield different concentrations. Additionally, over time landscaping activities (i.e. addition of fertilizers and other soil nutrients) or chemicals within the local water supply may affect the sulfate concentration.

7.4 Grading

7.4.1 All grading should be performed in accordance with the *Recommended Grading Specifications* contained in Appendix C. Where the recommendations of this section conflict with those of Appendix C; **the recommendations of this section take precedence**.

7.4.2 Prior to commencing grading, a preconstruction conference should be held at the site with the owner and/or developer, grading contractor, civil engineer and geotechnical engineer in attendance. Special soil handling and/or the grading plans can be discussed at that time.

7.4.3 Site preparation should begin with the removal of all deleterious material and vegetation. The depth of removal should be such that material exposed in cut areas or soils to be used as fill are relatively free of organic matter. Material generated during stripping and/or site demolition should be exported from the site.

7.4.4 All compressible surficial soils including undocumented fills, topsoil, and alluvium should be removed to firm natural ground and properly recompacted prior to placing structural fill and/or loading. Deeper than normal benching and/or stripping operations for sloping ground surfaces will be required for removal of the thicker topsoil.

7.4.5 Remedial grading to remove the alluvium may encounter groundwater, dependent upon the time of year the grading is performed. Specialized equipment and/or dewatering may be required in order to completely remove the alluvium.

7.4.6 Grading should result in soil within 5 feet of finish grade comprised of granular *low* expansive material. This will require removal of the upper Terrace Deposit clay, mining of the underlying sand and gravel, placing the clay at the base of the mine excavation up to 5 feet of proposed grade and placing a 5-foot cap of low expansive soil. The clays can be mixed with the underlying sand and gravel to result in a soil mix with a lower expansion potential. Laboratory testing indicated that mixed soil resulted in a *medium* expansion potential. This would require less mining, however, due to medium expansive soil, minimum Category II foundation recommendations would be required.

7.4.7 After removal of unsuitable materials as described above is performed, the site should then be brought to final subgrade elevations with structural fill compacted in layers. In general, soils native to the site are suitable for re-use as fill if free from vegetation, debris and other deleterious matter. Layers of fill should be no thicker than will allow for adequate bonding and compaction. All fill, including backfill and scarified ground surfaces, should be compacted to at least 90 percent of laboratory maximum dry density as determined by ASTM Test Procedure D-1557; at or slightly above optimum moisture content. Clays should be placed at a minimum of 4 percent above optimum moisture content. Fill areas with in-place density test results indicating moisture contents less that specified will require additional moisture conditioning prior to placing additional fill.

7.4.8 Oversize material (defined as material greater than 12 inches in nominal dimension) may be generated during excavation of the Terrace Gravel deposit. Placement of the oversize cobble and boulders should be performed in accordance with the recommendations in Appendix C. For fill areas it is recommended that oversize materials not be placed within 5 feet of proposed finish grade elevation for building pads and 3 feet below the deepest utility within streets.

7.4.9 Cut pads that expose expansive clay should be undercut to a depth of at least 5 feet. After the overexcavations have been performed, the area should be brought back to design subgrade elevations with properly compacted *low* expansive granular soils.

7.4.10 It is recommended that the cut portion of cut-fill transition pads be undercut to a depth of at least 3 feet and replaced with properly compacted *low* expansive fill soils.

7.5 Subdrains

7.5.1 Subdrains should be installed in the canyons to be filled. The subdrains should extend up the canyons to approximately 15 feet below proposed ultimate finish grade elevations and at least 2 feet below any proposed utilities.

7.5.2 The lower 20 feet of subdrains exiting the base of compacted fill slopes should consist of nonperforated pipe. A cutoff wall should be constructed immediately below the junction of the perforated pipe with the nonperforated pipe. The cutoff wall should extend at least 6 inches beyond the sides and the bottom of the subdrain trench and 6 inches above the top of the pipe.

7.5.3 Where subdrain systems do not outlet into permanent structures such as storm drains, the outlet pipe should be provided with a concrete headwall, riprap, or similar device.

7.5.4 After installation of the subdrains, the project civil engineer should survey the locations and prepare accurate as-built plans of the subdrain locations. The project soils engineer should verify the as-built subdrain outlet. The contractor should ensure that an adequate drainage gradient is maintained throughout the system, and that the subdrain outlet is free of obstructions.

7.6 Slope Stability

7.6.1 Slope stability analyses were performed for proposed cut and fill slopes using shear strength parameters based upon laboratory test results from this current investigation and experience with similar soil and geologic conditions. The results of the analysis indicate that cut and fill slopes have a factor-of-safety of at least 1.5 against deep seated and surficial instability for heights up to 40 feet. The results of the analyses are presented on Figures 4 and 5.

7.6.2 All cut slopes be observed during grading by an engineering geologist to verify that the soil and geologic conditions do not differ significantly from those anticipated and to determine if adverse bedding, fractures or joints exist. Remedial grading procedures may be recommended should adverse geologic conditions be observed.

7.6.3 The outer 15 feet of fill slopes, measured horizontal to the slope face, should be composed of properly compacted granular "soil" fill to reduce the potential for surface sloughing.

7.6.4 All fill slopes should be overbuilt at least 3 feet horizontally, and cut back to the design finish grade. As an alternative, fill slopes may be compacted by back-rolling at vertical intervals not to exceed 4 feet and then track-walking with a D-8 dozer, or equivalent, upon completion such that the fill soils are uniformly compacted to at least 90 percent relative compaction to the face of the finished slope.

7.6.5 All slopes should be planted, drained and properly maintained to reduce erosion.

7.7 Foundations

7.7.1 The foundation recommendations that follow are for one- or two-story residential structures and are separated into categories dependent on the thickness and geometry of the underlying fill soils as well as the Expansion Index of the prevailing subgrade soils of a particular building pad (or lot). The recommended minimum foundation and interior concrete slab design criteria for each Category is presented on the following page.

7.7.2 Foundations for either Category I, II, or III may be designed for an allowable soil bearing pressure of 2,000 pounds per square foot (psf) (dead plus live load). This bearing pressure may be increased by one-third for transient loads such as wind or seismic forces.

TABLE 7.7.1
FOUNDATION RECOMMENDATIONS BY CATEGORY

Foundation Category	Minimum Footing Depth (inches)	Continuous Footing Reinforcement	Interior Slab Reinforcement
I	12	One No. 4 bar top and bottom	6 x 6-10/10 welded wire mesh at slab mid-point
II	18	Two No. 4 bars top and bottom	No. 3 bars at 24 inches on center, both directions
III	24	Two No. 5 bars top and bottom	No. 3 bars at 18 inches on center, both directions

CATEGORY CRITERIA

Category I:	Maximum fill thickness is less than 20 feet and Expansion Index is less than or equal to 50.
Category II:	Maximum fill thickness is less than 50 feet and Expansion Index is less than or equal to 90, or variation in fill thickness is between 10 feet and 20 feet.
Category III:	Fill thickness exceeds 50 feet, or variation in fill thickness exceeds 20 feet, or Expansion Index exceeds 90, but is less than 130.

Notes:

1. All footings should have a minimum width of 12 inches.
2. Footing depth is measured from lowest adjacent subgrade.
3. All interior living area concrete slabs should be at least 4 inches thick for Categories I and II and 5 inches thick for Category III.
4. All interior concrete slabs should be underlain by at least 4 inches (3 inches for Category III) of clean sand or crushed rock.
5. All slabs expected to receive moisture-sensitive floor coverings or used to store moisture-sensitive materials should be underlain by a vapor barrier covered with at least 2 inches of the clean sand recommended in No. 4 above.

7.7.3 Isolated footings located beyond the perimeter of the building that support structural elements connected to the building are not recommended for Category III. Where this condition cannot be avoided, the isolated footings should be connected to the building foundation system with grade beams.

7.7.4 For Foundation Category III, the structural slab design should consider using interior stiffening beams and connecting isolated footings and/or increasing the slab thickness. In addition, consideration should be given to connecting patio slabs, which exceed 5 feet in width, to the building foundation to reduce the potential for future separation to occur.

7.7.5 No special subgrade presaturation is deemed necessary prior to placing concrete, however, the exposed foundation and slab subgrade soils should be sprinkled, as necessary, to maintain a moist condition as would be expected in any such concrete placement.

7.7.6 Where buildings or other improvements are planned near the top of a slope steeper than 3:1 (horizontal:vertical), special foundations and/or design considerations are recommended due to the tendency for lateral soil movement to occur.

- For fill slopes less than 20 feet high, building footings should be deepened such that the bottom outside edge of the footing is at least 7 feet horizontally from the face of the slope.
- Where the height of the fill slope exceeds 20 feet, the minimum horizontal distance should be increased to H/3 (where H equals the vertical distance from the top of the slope to the toe) but need not exceed 40 feet. For composite (fill over cut) slopes, H equals the vertical distance from the top of the slope to the bottom of the fill portion of the slope. An acceptable alternative to deepening the footings would be the use of a post-tensioned slab and foundation system or increased footing and slab reinforcement. Specific design parameters or recommendations for either of these alternatives can be provided once the building location and fill slope geometry have been determined.
- For cut slopes in dense formational materials, or fill slopes inclined at 3:1 (horizontal:vertical) or flatter, the bottom outside edge of building footings should be at least 7 feet horizontally from the face of the slope, regardless of slope height.
- Swimming pools located within 7 feet of the top of cut or fill slopes are not recommended. Where such a condition cannot be avoided, it is recommended that the portion of the swimming pool wall within 7 feet of the slope face be designed assuming that the adjacent soil provides no lateral support. This recommendation applies to fill slopes up to 30 feet in height, and cut slopes regardless of height. For swimming pools located near the top of fill slopes greater than 30 feet in height, additional recommendations may be required and Geocon Incorporated should be contacted for a review of specific site conditions.
- Although other improvements which are relatively rigid or brittle, such as concrete flatwork or masonry walls may experience some distress if located near the top of a slope, it is generally not economical to mitigate this potential. It may be possible, however, to incorporate design measures which would permit some lateral soil movement without causing extensive distress. Geocon Incorporated should be consulted for specific recommendations.

7.7.7 As an alternative to the foundation recommendations for each category, consideration should be given to the use of post-tensioned concrete slab and foundation systems for the support of the proposed structures. The post-tensioned systems should be designed by a structural engineer experienced in post-tensioned slab design and design criteria of the

Post-Tensioning Institute (UBC Standard No. 1816). Although this procedure was developed for expansive soils, it is understood that it can also be used to reduce the potential for foundation distress due to differential fill settlement. The post-tensioned design should incorporate the geotechnical parameters presented on the following table entitled *Post-Tensioned Foundation System Design Parameters* for the particular Foundation Category designated.

TABLE 7.7.2
POST-TENSIONED FOUNDATION SYSTEM DESIGN PARAMETERS

Post-Tensioning Institute (PTI) Design Parameters	Foundation Category I	Foundation Category II	Foundation Category III
1. Thornthwaite Index	-20	-20	-20
2. Clay Type—Montmorillonite	Yes	Yes	Yes
3. Clay Portion (Maximum)	30%	50%	70%
4. Depth to Constant Soil Suction	7.0 ft.	7.0 ft.	7.0 ft.
5. Soil Suction	3.6 ft.	3.6 ft.	3.6 ft.
6. Moisture Velocity	0.7 in./mo.	0.7 in./mo.	0.7 in./mo.
7. Edge Lift Moisture Variation Distance	2.6 ft.	2.6 ft.	2.6 ft.
8. Edge Lift	0.41 in.	0.78 in.	1.15 in.
9. Center Lift Moisture Variation Distance	5.3 ft.	5.3 ft.	5.3 ft.
10. Center Lift	2.12 in.	3.21 in.	4.74 in.

7.7.8 UBC Standard No. 1816 uses interior stiffener beams in its structural design procedures. If the structural engineer proposes a post-tensioned foundation design method **other than UBC Standard No. 1816**, it is recommended that interior stiffener beams be used for Foundation Categories II and III. The depth of the perimeter foundation should be at least 12 inches for Foundation Category I. Where the Expansion Index for a particular building pad exceeds 50 but is less than 91, the perimeter footing depth should be at least 18 inches; and where it exceeds 90 but is less than 130, the perimeter footing depth should be at least 24 inches. Geocon Incorporated should be consulted to provide additional design parameters as required by the structural engineer.

7.7.9 The recommendations of this report are intended to reduce the potential for cracking of slabs due to expansive soils (if present), differential settlement of deep fills or fills of varying thicknesses. However, even with the incorporation of the recommendations presented herein, foundations, stucco walls, and slabs-on-grade placed on such conditions may still exhibit some cracking due to soil movement and/or shrinkage. The occurrence of concrete shrinkage cracks is independent of the supporting soil characteristics. Their occurrence may be reduced and/or controlled by limiting the slump of the concrete, proper concrete placement and curing, and by the placement of crack control joints at periodic intervals, in particular, where re-entry slab corners occur.

7.8 Retaining Walls and Lateral Loads

7.8.1 Retaining walls not restrained at the top and having a level backfill surface should be designed for an active soil pressure equivalent to the pressure exerted by a fluid density of 30 pounds per cubic foot (pcf). Where the backfill will be inclined at no steeper than 2.0 to 1.0, an active soil pressure of 40 pcf is recommended. These soil pressures assume that the backfill materials within an area bounded by the wall and a 1:1 plane extending upward from the base of the wall possess an Expansion Index of less than 50. For those lots with finish grade soils having an Expansion Index greater than 50 and/or where backfill materials do not conform to the above criteria, Geocon Incorporated should be consulted for additional recommendations.

7.8.2 Unrestrained walls are those that are allowed to rotate more than 0.001H at the top of the wall. Where walls are restrained from movement at the top, an additional uniform pressure of 7H psf (where H equals the height of the retaining wall portion of the wall in feet) should be added to the above active soil pressure.

7.8.3 All retaining walls should be provided with a drainage system adequate to prevent the buildup of hydrostatic forces and should be waterproofed as required by the project architect. The use of drainage openings through the base of the wall (weep holes, etc.) is not recommended where the seepage could be a nuisance or otherwise adversely impact the property adjacent to the base of the wall. The above recommendations assume a properly compacted granular (Expansion Index less than 50) backfill material with no hydrostatic forces or imposed surcharge load. If conditions different than those described are anticipated, or if specific drainage details are desired, Geocon Incorporated should be contacted for additional recommendations.

7.8.4 In general, wall foundations having a minimum depth and width of one foot may be designed for an allowable soil bearing pressure of 2,000 psf, provided the soil within 3 feet below the base of the wall has an Expansion Index of less than 90. The proximity of the foundation to the top of a slope steeper than 3:1 could impact the allowable soil bearing pressure. Therefore, Geocon Incorporated should be consulted where such a condition is anticipated.

7.8.5 For resistance to lateral loads, an allowable passive earth pressure equivalent to a fluid density of 300 pcf is recommended for footings or shear keys poured neat against properly compacted granular fill soils or undisturbed natural soils. The allowable passive pressure assumes a horizontal surface extending at least 5 feet or three times the surface generating the passive pressure, whichever is greater. The upper 12 inches of material not protected by floor slabs or pavement should not be included in the design for lateral resistance. An allowable friction coefficient of 0.4 may be used for resistance to sliding between soil and concrete. This friction coefficient may be combined with the allowable passive earth pressure when determining resistance to lateral loads.

7.8.6 The recommendations presented above are generally applicable to the design of rigid concrete or masonry retaining walls having a maximum height of 8 feet. In the event that walls higher than 8 feet or other types of walls are planned, such as crib-type walls, Geocon Incorporated should be consulted for additional recommendations.

7.9 Slope Maintenance

7.9.1 Slopes that are steeper than 3:1 (horizontal:vertical) may, under conditions which are both difficult to prevent and predict, be susceptible to near surface (surficial) slope instability. The instability is typically limited to the outer three feet of a portion of the slope and usually does not directly impact the improvements on the pad areas above or below the slope. The occurrence of surficial instability is more prevalent on fill slopes and is generally preceded by a period of heavy rainfall, excessive irrigation, or the migration of subsurface seepage. The disturbance and/or loosening of the surficial soils, as might result from root growth, soil expansion, or excavation for irrigation lines and slope planting, may also be a significant contributing factor to surficial instability. It is, therefore, recommended that, to the maximum extent practical: (a) disturbed/loosened surficial soils be either removed or properly recompacted, (b) irrigation systems be periodically inspected and maintained to eliminate leaks and excessive irrigation, and (c) surface drains on and adjacent to slopes be periodically maintained to preclude ponding or erosion. Although the incorporation of the above recommendations should reduce the potential for surficial slope instability, it will not eliminate the possibility, and, therefore, it may be necessary to rebuild or repair a portion of the project's slopes in the future.

7.10 Drainage

7.10.1 Adequate drainage provisions are imperative. Under no circumstances should water be allowed to pond adjacent to footings. The building pads should be properly finish graded after the buildings and other improvements are in place so that drainage water is directed away from foundations, pavements, concrete slabs, and slope tops to controlled drainage devices.

7.11 Grading Plan Review

7.11.1. The soil engineer and engineering geologist should review the grading plans prior to finalization to verify their compliance with the recommendations of this report and determine the necessity for additional analyses and/or recommendations.

LIMITATIONS AND UNIFORMITY OF CONDITIONS

1. The recommendations of this report pertain only to the site investigated and are based upon the assumption that the soil conditions do not deviate from those disclosed in the investigation. If any variations or undesirable conditions are encountered during construction, or if the proposed construction will differ from that anticipated herein, Geocon Incorporated should be notified so that supplemental recommendations can be given. The evaluation or identification of the potential presence of hazardous or corrosive materials was not part of the scope of services provided by Geocon Incorporated.

2. This report is issued with the understanding that it is the responsibility of the owner, or of his representative, to ensure that the information and recommendations contained herein are brought to the attention of the architect and engineer for the project and incorporated into the plans, and the necessary steps are taken to see that the contractor and subcontractors carry out such recommendations in the field.

3. The findings of this report are valid as of the present date. However, changes in the conditions of a property can occur with the passage of time, whether they be due to natural processes or the works of man on this or adjacent properties. In addition, changes in applicable or appropriate standards may occur, whether they result from legislation or the broadening of knowledge. Accordingly, the findings of this report may be invalidated wholly or partially by changes outside our control. Therefore, this report is subject to review and should not be relied upon after a period of three years.

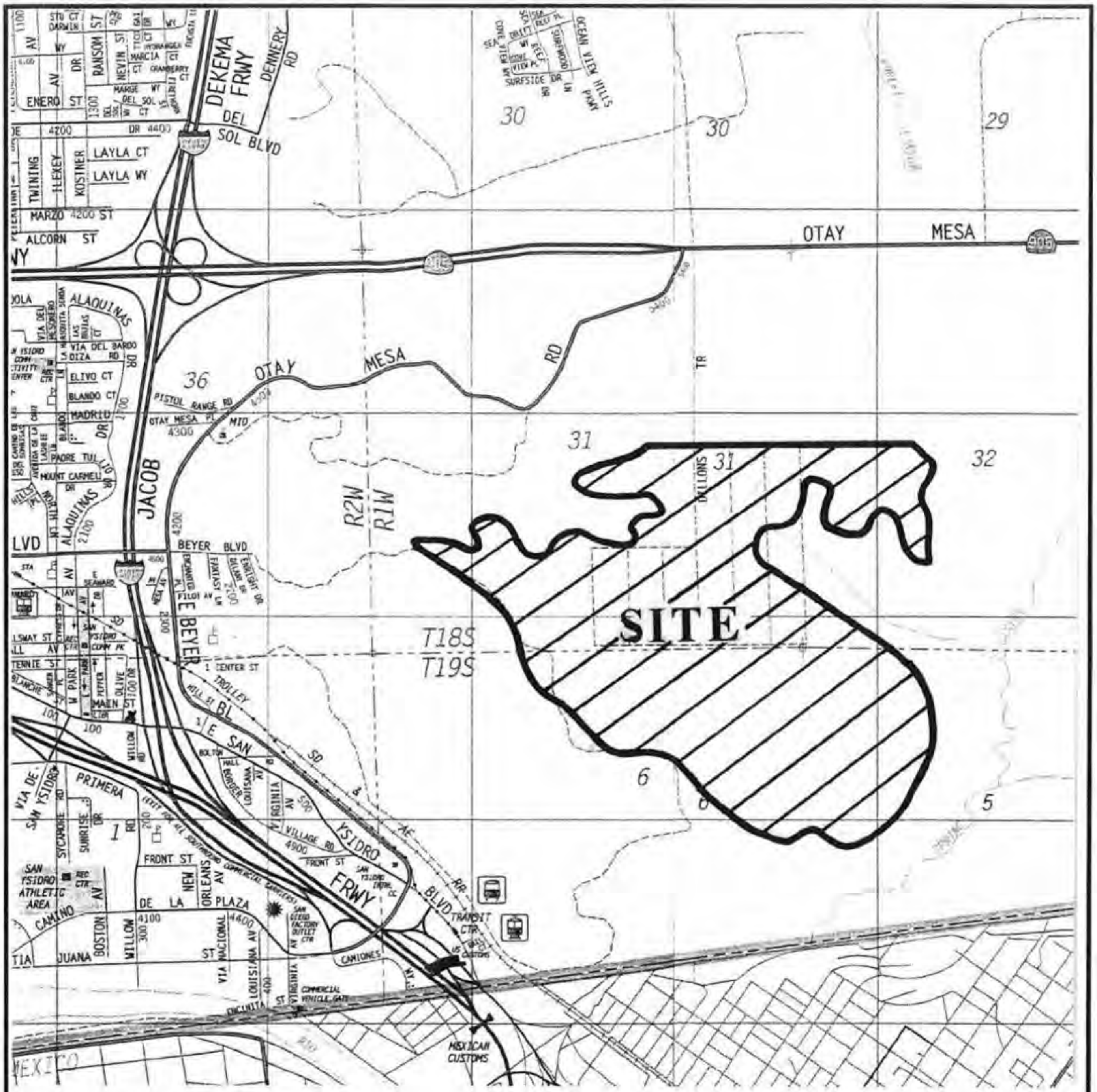

SOURCE : 2002 THOMAS BROTHERS MAP
SAN DIEGO COUNTY, CALIFORNIA

N

NO SCALE

GEOCON
INCORPORATED

GEOTECHNICAL CONSULTANTS
6960 FLANDERS DRIVE - SAN DIEGO, CALIFORNIA 92121-2974
PHONE 858 558-6900 - FAX 858 558-6159

GCC / TA | DSK / D000D

VICINITY MAP

SOUTH OTAY MESA
SAN DIEGO, CALIFORNIA

DATE **10-04-2002** | PROJECT NO. 06847 - 42 - 01 | FIG. 1

1VIC1

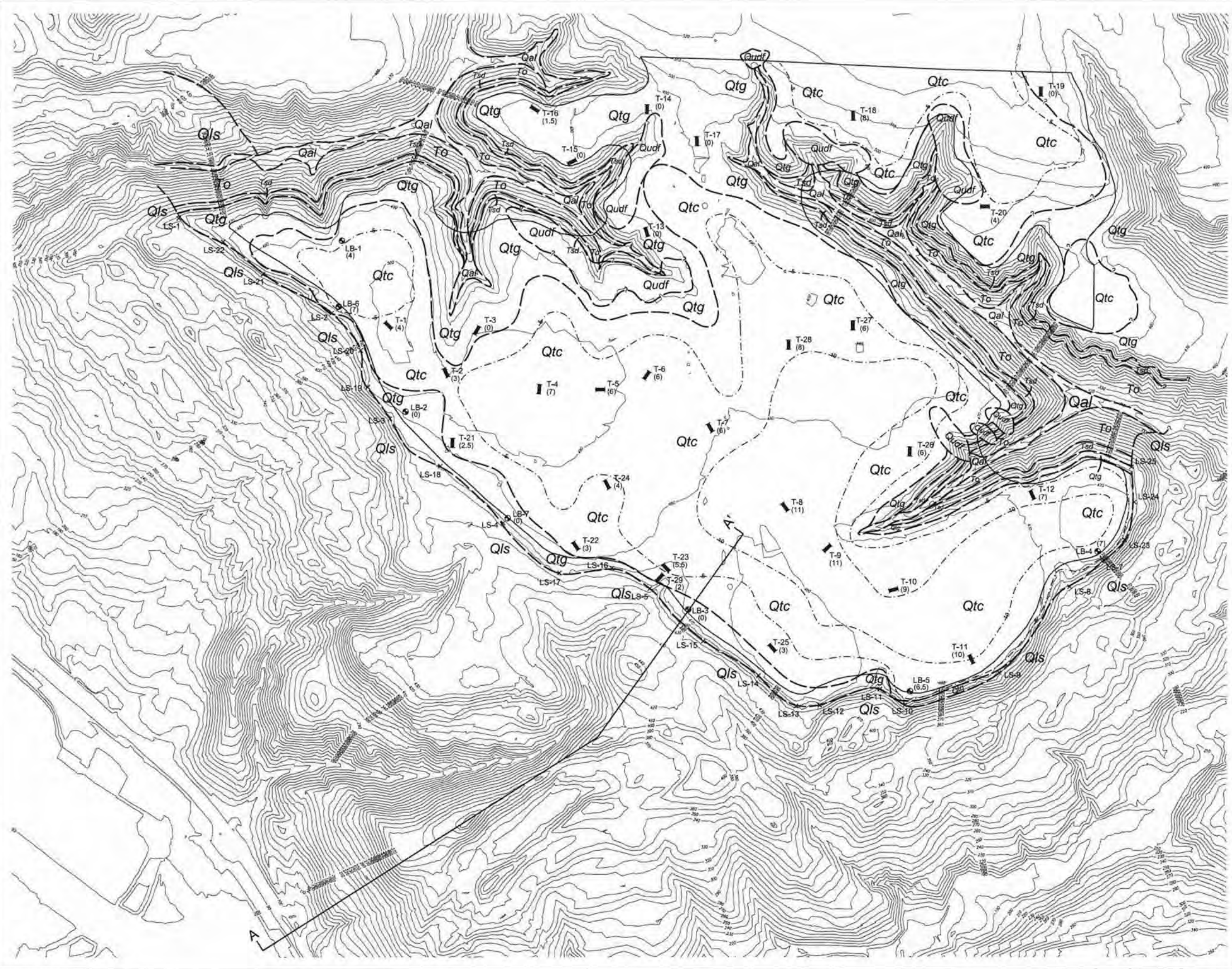

GEOCON LEGEND

Qudf	UNDOCUMENTED FILL
Qls	LANDSLIDE DEBRIS
Qal	ALLUVIUM
Qtc	TERRACE DEPOSIT CLAY (Dot-Dash Contours Indicate Thickness In Feet)
Qtg	TERRACE DEPOSIT GRAVEL
Tsd	SAN DIEGO FORMATION
To	OTAY FORMATION
⁀‿	APPROX. LOCATION OF GEOLOGIC CONTACT (Queried Where Uncertain)
-·-·-	CONTOURS CLAY-THICKNESS (Feet)
LB-7 (0) ◕	SURVEYED LOCATION OF LARGE-DIAMETER EXPLORATORY BORING (Thickness of Terrace Deposit Clay In Feet)
LS-25 ×	SURVEYED LOCATION OF LANDSLIDE BACKSCARP
T-29 (2) ▬	APPROX. LOCATION OF EXPLORATORY BACKHOE TRENCH (Thickness of Terrace Deposit Clay In Feet)
A A'	GEOLOGIC CROSS-SECTION
	FUTURE DEVELOPMENTLIMITS BOUNDARY

GEOLOGIC MAP
SOUTH OTAY MESA
SAN DIEGO, CALIFORNIA

GEOCON
INCORPORATED
GEOTECHNICAL CONSULTANTS
6960 FLANDERS DRIVE - SAN DIEGO, CALIFORNIA 92121-2974
PHONE 858 558-6900 - FAX 858 558-6159

SCALE 1" = 300'
DATE 10 - 04 - 2002
PROJECT NO. 06847 - 42 - 01
SHEET 1 OF 1
FIGURE 2

Project No. 06847-42-01
Analysis Date: 10/4/2002

SOUTH OTAY MESA PROPERTY
SAN YSIDRO, CALIFORNIA

Cross Section A - A'

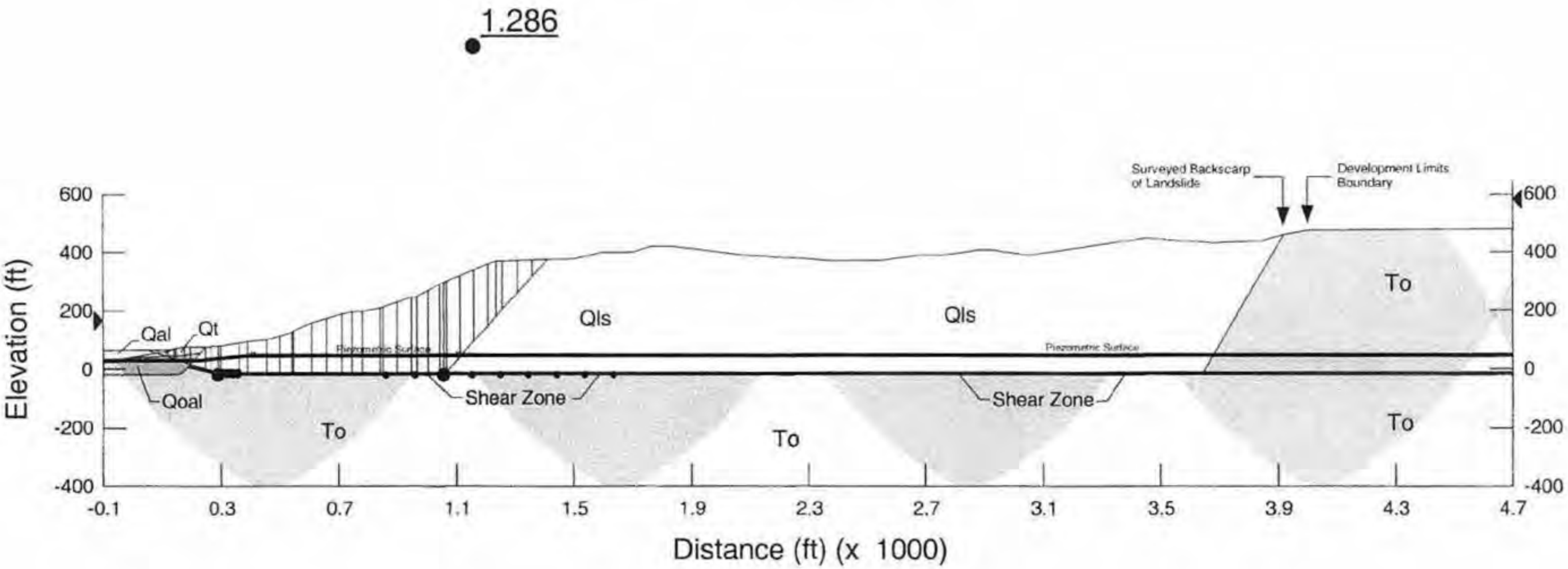

Soil Type	Unit Weight (psf)	Angle of Internal Friction (deg)	Cohesion (psf)
Qal	125	35	100
Qoal	125	39	250
Qt	120	33	100
Qls	125	30	300
Shear	120	9	50
To	125	34	450

File Name: South Otay Mesa\AA1.slz

Figure 3

ASSUMED CONDITIONS:

Slope Height	$H = 40$ feet
Slope Inclination	2:1 (Horizontal :Vertical)
Total Unit Weight of Soil	$\gamma_t = 120$ pounds per cubic foot
Angle of Internal Friction	$\phi = 32$ degrees
Apparent Cohesion	$C = 500$ pounds per square foot
No Seepage Forces	

ANALYSIS:

$\gamma_{c_o} = \frac{\gamma H \tan\phi}{C}$ Equation (3-3), Reference 1

$FS = \frac{N_{cf} C}{\gamma H}$ Equation (3-2), Reference 1

$\gamma_{c_o} = 5.9$ Calculated Using Eq. (3-3)

$N_{cf} = 24$ Determined Using Figure 10, Reference 2

$FS = 2.50$ Factor of Safety Calculated Using Eq. (3-2)

REFERENCES:

(1) Janbu, N., Stability Analysis of Slopes with Dimensionless Parameters, Harvard Soil Mechanics, Series No. 46, 1954.

(2) Janbu, N., Discussion of J.M. Bell, Dimensionless Parameters for Homogeneous Earth Slopes, Journal of Soil Mechanics and Foundation Design, No. SM6, November 1967.

SLOPE STABILITY ANALYSIS

SOUTH OTAY MESA PROPERTY

SAN DIEGO, CALIFORNIA

FIGURE 4

ASSUMED CONDITIONS:

Slope Height	H	=	Infinite	
Depth of Saturation	Z	=	3	feet
Slope Inclination	2:1	(Horizontal :Vertical)		
Slope Angle	i	=	26.6	degrees
Unit Weight of Water	γ_w	=	62.4	pounds per cubic foot
Total Unit Weight of Soil	γ_t	=	120	pounds per cubic foot
Angle of Internal Friction	ϕ	=	32	degrees
Apparent Cohesion	C	=	500	pounds per square foot

Slope saturated to vertical depth Z below slope face.
Seepage forces parallel to slope face

ANALYSIS:

$$FS = \frac{C + (\gamma_t - \gamma_w) Z \cos^2 i \tan\phi}{\gamma_t Z \sin i \cos i} = 4.0$$

REFERENCES:

(1) Haefeli, R. *The Stability of Slopes Acted Upon by Parallel Seepage,* Proc. Second International Conference, SMFE, Rotterdam, 1948, 1, 57-62.

(2) Skempton, A. W., and F. A. Delory, *Stability of Natural Slopes in London Clay*, Proc. Fourth International Conference, SMFE, London, 1957, 2, 378-81.

SURFICIAL SLOPE STABILITY ANALYSIS

SOUTH OTAY MESA PROPERTY

SAN DIEGO, CALIFORNIA

FIGURE 5

APPENDIX A

APPENDIX A

FIELD INVESTIGATION

The field investigation was performed during the period of August 22 through September 3, 2002 and consisted of a site reconnaissance, excavation of 7 large-diameter borings and 29 backhoe trenches. The approximate locations of the boring and trench excavations are shown on the Geologic Map (Figure 2, Map Pocket).

The large diameter borings were excavated to depths varying from 37 to 73 feet below existing grade using a Soilmec 108 truck mounted drill rig equipped with a 30-inch diameter auger. Relatively undisturbed samples were obtained from the borings by driving a split-tube samples 12 inches into the undisturbed soil mass with blows from a telescoping Kelly bar varying if weight from 1,700 pounds to 4,500 pounds. The sample was equipped with 1-inch by 2-3/8 inch-diameter brass rings to facilitate removal and laboratory testing.

Backhoe trenches were excavated to depths varying from 6 to 16 feet using a John Deere 510 rubber tire backhoe equipped with a 24-inch wide bucket. Disturbed bulk and chunk samples were obtained at selected locations in the exploratory trenches.

The soils encountered in the exploratory excavations were visually examined, classified and logged. Logs of borings and trenches are presented on Figures A-1 through A-47. The logs depict the soil and geologic conditions encountered and the depth as which samples were obtained.

PROJECT NO. 06847-42-01

BORING LB 1

ELEV. (MSL.) 492 DATE COMPLETED 8/23/02

EQUIPMENT SOILMEC 108 TRUCK MT

DEPTH IN FEET	SAMPLE NO.	LITHOLOGY	GROUNDWATER	SOIL CLASS (USCS)	MATERIAL DESCRIPTION	PENETRATION RESISTANCE (BLOWS/FT.)	DRY DENSITY (P.C.F.)	MOISTURE CONTENT (%)
0					**TERRACE DEPOSIT CLAY** Stiff, damp, dark brown, very Sandy CLAY			
2				CL				
4					**TERRACE DEPOSIT GRAVEL** Medium dense, humid to damp, light reddish brown, Gravelly, coarse SAND, trace clay, silt, slight caving			
6	LB1-1	▨		SP				
8								
10					Medium dense, moist, reddish brown, very Gravelly, Silty SAND, with some clay, subrounded to rounded, fine to medium size (1" to 6" diameter)			
12	LB1-2	▨						
14								
16				SM-GM				
18								
20								
22								
24								
26								
28								

Figure A-1, Log of Boring LB 1

SOM

SAMPLE SYMBOLS	☐ ... SAMPLING UNSUCCESSFUL	◧ ... STANDARD PENETRATION TEST	■ ... DRIVE SAMPLE (UNDISTURBED)
	▨ ... DISTURBED OR BAG SAMPLE	◣ ... CHUNK SAMPLE	▼ ... WATER TABLE OR SEEPAGE

NOTE: THE LOG OF SUBSURFACE CONDITIONS SHOWN HEREON APPLIES ONLY AT THE SPECIFIC BORING OR TRENCH LOCATION AND AT THE DATE INDICATED. IT IS NOT WARRANTED TO BE REPRESENTATIVE OF SUBSURFACE CONDITIONS AT OTHER LOCATIONS AND TIMES.

PROJECT NO. 06847-42-01

BORING LB 1

ELEV. (MSL.) 492 DATE COMPLETED 8/23/02

EQUIPMENT SOILMEC 108 TRUCK MT

DEPTH IN FEET	SAMPLE NO.	LITHOLOGY	GROUNDWATER	SOIL CLASS (USCS)	MATERIAL DESCRIPTION	PENETRATION RESISTANCE (BLOWS/FT.)	DRY DENSITY (P.C.F.)	MOISTURE CONTENT (%)
30								
32				SM-GM				
34								
36					Very dense, moist, light to medium red brown, Silty, Sandy, very coarse GRAVEL, 8" to 24" diameter clasts, trace clay			
38								
	LB1-3			GM				
40								
42					-12 inch clean sand layer; horizontal laminated bedding			
44								
46								
48	LB1-4							
					Dense, moist, medium reddish brown, very Silty, Sandy, medium to coarse GRAVEL			
50								
52				GM-SM				
54								
56								
58					-Sharp depositional contact at 58.5 feet N55E, 5NW with undulations dipping approximately 2 degrees to SW and NW			
				SM				

Figure A-2, Log of Boring LB 1

SOM

SAMPLE SYMBOLS	☐ ... SAMPLING UNSUCCESSFUL	◧ ... STANDARD PENETRATION TEST	■ ... DRIVE SAMPLE (UNDISTURBED)
	▨ ... DISTURBED OR BAG SAMPLE	◪ ... CHUNK SAMPLE	▼ ... WATER TABLE OR SEEPAGE

NOTE: THE LOG OF SUBSURFACE CONDITIONS SHOWN HEREON APPLIES ONLY AT THE SPECIFIC BORING OR TRENCH LOCATION AND AT THE DATE INDICATED. IT IS NOT WARRANTED TO BE REPRESENTATIVE OF SUBSURFACE CONDITIONS AT OTHER LOCATIONS AND TIMES.

PROJECT NO. 06847-42-01

BORING LB 1

ELEV. (MSL.) 492 DATE COMPLETED 8/23/02
EQUIPMENT SOILMEC 108 TRUCK MT

DEPTH IN FEET	SAMPLE NO.	LITHOLOGY	GROUNDWATER	SOIL CLASS (USCS)	MATERIAL DESCRIPTION	PENETRATION RESISTANCE (BLOWS/FT.)	DRY DENSITY (P.C.F.)	MOISTURE CONTENT (%)
60 - 66	LB1-5 ⊠	▨			**SAN DIEGO FORMATION** Dense, damp, light gray to yellow-brown, Silty fine SANDSTONE with some friable (cohesionless when disturbed) sand layers -Horizontal to gently undulating laminated micaceous beds (interbedded sandy siltstone and sandstone with 1" to 3" thick alternating beds			
66					BORING TERMINATED AT 66 FEET			

Figure A-3, Log of Boring LB 1

SOM

SAMPLE SYMBOLS			
	☐ ... SAMPLING UNSUCCESSFUL	◧ ... STANDARD PENETRATION TEST	■ ... DRIVE SAMPLE (UNDISTURBED)
	⊠ ... DISTURBED OR BAG SAMPLE	◪ ... CHUNK SAMPLE	▼ ... WATER TABLE OR SEEPAGE

NOTE: THE LOG OF SUBSURFACE CONDITIONS SHOWN HEREON APPLIES ONLY AT THE SPECIFIC BORING OR TRENCH LOCATION AND AT THE DATE INDICATED. IT IS NOT WARRANTED TO BE REPRESENTATIVE OF SUBSURFACE CONDITIONS AT OTHER LOCATIONS AND TIMES.

PROJECT NO. 06847-42-01

BORING LB 2

ELEV. (MSL.) 484 DATE COMPLETED 8/23/02

EQUIPMENT SOILMEC 108 TRUCK MT

DEPTH IN FEET	SAMPLE NO.	LITHOLOGY	GROUNDWATER	SOIL CLASS (USCS)	MATERIAL DESCRIPTION	PENETRATION RESISTANCE (BLOWS/FT.)	DRY DENSITY (P.C.F.)	MOISTURE CONTENT (%)
0					**TERRACE DEPOSIT GRAVEL** Dense, humid to damp, medium reddish brown, Gravelly, Silty, fine to medium SAND, some clay			
2								
4				SM				
6								
8								
10					-Horizontal, sharp depositional contact			
12					Dense, humid to damp, light reddish brown, very Gravelly, medium to coarse SAND			
14								
16				SP-GP	-Upper part is noncohesive, (when disturbed), with ~8 foot diameter "belling" of boring between 15 and 19 feet; horizontal imbrication of cobbles with clean sand with heavy mineral (magnetite) laminations			
18								
20								
22					-Transitional contact			
24					Very dense, moist, medium brown, Sandy, very coarse GRAVEL			
26				GM	-Oversize boulders - cobbles 6" to 24" diameter			
28								

Figure A-4, Log of Boring LB 2

SOM

SAMPLE SYMBOLS

☐ ... SAMPLING UNSUCCESSFUL
◧ ... STANDARD PENETRATION TEST
■ ... DRIVE SAMPLE (UNDISTURBED)
▨ ... DISTURBED OR BAG SAMPLE
◪ ... CHUNK SAMPLE
▼ ... WATER TABLE OR SEEPAGE

NOTE: THE LOG OF SUBSURFACE CONDITIONS SHOWN HEREON APPLIES ONLY AT THE SPECIFIC BORING OR TRENCH LOCATION AND AT THE DATE INDICATED. IT IS NOT WARRANTED TO BE REPRESENTATIVE OF SUBSURFACE CONDITIONS AT OTHER LOCATIONS AND TIMES.

PROJECT NO. 06847-42-01

BORING LB 2

ELEV. (MSL.) 484 DATE COMPLETED 8/23/02

EQUIPMENT SOILMEC 108 TRUCK MT

DEPTH IN FEET	SAMPLE NO.	LITHOLOGY	GROUNDWATER	SOIL CLASS (USCS)	MATERIAL DESCRIPTION	PENETRATION RESISTANCE (BLOWS/FT.)	DRY DENSITY (P.C.F.)	MOISTURE CONTENT (%)
30								
32					-Irregular horizontal scour-contact			
34					**SAN DIEGO FORMATION** Dense, damp, light gray-brown, Silty fine SANDSTONE -Interbedded micaceous siltstone layers; undulating approximately horizontal laminated bedding (observed from 10 to 15 feet above contact and from intact chunks in spoil pile)			
36								
38				SM				
40								
42								
44								
46								
48								
					BORING TERMINATED AT 49 FEET *NOTE: Because of "belling" in noncohesive bouldery materials from 15 to 19 feet, downhole logging could not be safely performed beyond 15 feet			

Figure A-5, Log of Boring LB 2

SOM

SAMPLE SYMBOLS			
	☐ ... SAMPLING UNSUCCESSFUL	◧ ... STANDARD PENETRATION TEST	■ ... DRIVE SAMPLE (UNDISTURBED)
	▨ ... DISTURBED OR BAG SAMPLE	◩ ... CHUNK SAMPLE	▼ ... WATER TABLE OR SEEPAGE

NOTE: THE LOG OF SUBSURFACE CONDITIONS SHOWN HEREON APPLIES ONLY AT THE SPECIFIC BORING OR TRENCH LOCATION AND AT THE DATE INDICATED. IT IS NOT WARRANTED TO BE REPRESENTATIVE OF SUBSURFACE CONDITIONS AT OTHER LOCATIONS AND TIMES.

PROJECT NO. 06847-42-01

BORING LB 3

ELEV. (MSL.) 472 DATE COMPLETED 8/23/02

EQUIPMENT SOILMEC 108 TRUCK MT

DEPTH IN FEET	SAMPLE NO.	LITHOLOGY	GROUNDWATER	SOIL CLASS (USCS)	MATERIAL DESCRIPTION	PENETRATION RESISTANCE (BLOWS/FT.)	DRY DENSITY (P.C.F.)	MOISTURE CONTENT (%)
0					**TERRACE DEPOSIT GRAVEL** Medium dense to dense, damp, light to medium reddish brown, Sandy, medium to coarse GRAVEL to very Gravelly SAND, with some silt and trace clay			
2								
4								
6								
8				GM-SM				
10								
12								
14								
16					-Irregular transition 15 to 17 feet			
18					Dense, moist, medium reddish brown, Sandy, very coarse GRAVEL			
20					-Frequent occurances of 18 to 14 inch diameter, boulders of subrounded to rounded volcanic and granitic rock			
22				GM				
24								
26					-Very irregular, approximately horizontal, sharp depositional (scour) contact			
28				SM	**SAN DIEGO FORMATION** Dense, damp, light brown, Silty, fine to medium SANDSTONE			

Figure A-6, Log of Boring LB 3

SOM

SAMPLE SYMBOLS

☐ ... SAMPLING UNSUCCESSFUL

◧ ... STANDARD PENETRATION TEST

■ ... DRIVE SAMPLE (UNDISTURBED)

▨ ... DISTURBED OR BAG SAMPLE

◪ ... CHUNK SAMPLE

▼ ... WATER TABLE OR SEEPAGE

NOTE: THE LOG OF SUBSURFACE CONDITIONS SHOWN HEREON APPLIES ONLY AT THE SPECIFIC BORING OR TRENCH LOCATION AND AT THE DATE INDICATED. IT IS NOT WARRANTED TO BE REPRESENTATIVE OF SUBSURFACE CONDITIONS AT OTHER LOCATIONS AND TIMES.

PROJECT NO. 06847-42-01

BORING LB 3

ELEV. (MSL.) 472 DATE COMPLETED 8/23/02

EQUIPMENT SOILMEC 108 TRUCK MT

DEPTH IN FEET	SAMPLE NO.	LITHOLOGY	GROUNDWATER	SOIL CLASS (USCS)	MATERIAL DESCRIPTION	PENETRATION RESISTANCE (BLOWS/FT.)	DRY DENSITY (P.C.F.)	MOISTURE CONTENT (%)
30								
32				GM	Dense, moist, reddish brown, Sandy coarse GRAVEL, subrounded to subangular -Horizontal, sharp scour-contact			
34								
36								
38				SM	Dense, damp, light tan-brown, very Silty fine SANDSTONE, micaceous			
40				GM	Very dense, moist, reddish brown, Sandy coarse GRAVEL -Sharp, horizontal scour-contact			
42								
44	LB3-1 ▨			SM	**OTAY FORMATION** Very dense, damp, light gray-olive, Silty, very fine SANDSTONE -Joint N80W, 80N, terminated by contact below -Sharp, horizontal scour-contact			
46								
48	LB3-2 ▨ LB3-3 ▨			CL	Very stiff to hard, moist, light brown-pink, Silty CLAYSTONE; possibly bentonitic, massive and blocky			
50								
52					BORING TERMINATED AT 52 FEET			

Figure A-7, Log of Boring LB 3

SOM

SAMPLE SYMBOLS

☐ ... SAMPLING UNSUCCESSFUL
◧ ... STANDARD PENETRATION TEST
■ ... DRIVE SAMPLE (UNDISTURBED)
▨ ... DISTURBED OR BAG SAMPLE
◪ ... CHUNK SAMPLE
▼ ... WATER TABLE OR SEEPAGE

NOTE: THE LOG OF SUBSURFACE CONDITIONS SHOWN HEREON APPLIES ONLY AT THE SPECIFIC BORING OR TRENCH LOCATION AND AT THE DATE INDICATED. IT IS NOT WARRANTED TO BE REPRESENTATIVE OF SUBSURFACE CONDITIONS AT OTHER LOCATIONS AND TIMES.

PROJECT NO. 06847-42-01

BORING LB 4

ELEV. (MSL.) 476 DATE COMPLETED 8/28/02

EQUIPMENT SOILMEC 108 TRUCK MT

DEPTH IN FEET	SAMPLE NO.	LITHOLOGY	GROUNDWATER	SOIL CLASS (USCS)	MATERIAL DESCRIPTION	PENETRATION RESISTANCE (BLOWS/FT.)	DRY DENSITY (P.C.F.)	MOISTURE CONTENT (%)
0 2 4 6				CL-SC	**TERRACE DEPOSIT CLAY** Stiff, damp, dark reddish brown to brown, very Sandy CLAY; massive, with some fine gravel -Irregular, approximately horizontal contact			
8 10 12				SP-GP	**TERRACE DEPOSIT GRAVEL** Dense, damp, medium to light reddish brown, very Gravelly coarse SAND -Sloughing, low cohesion, when disturbed			
14 16 18 20 22 24 26 28				GM	Dense, damp, light to medium reddish brown, Sandy, very coarse GRAVEL, with some silt, trace clay			

Figure A-8, Log of Boring LB 4

SOM

SAMPLE SYMBOLS			
	☐ ... SAMPLING UNSUCCESSFUL	◧ ... STANDARD PENETRATION TEST	■ ... DRIVE SAMPLE (UNDISTURBED)
	▨ ... DISTURBED OR BAG SAMPLE	◪ ... CHUNK SAMPLE	▼ ... WATER TABLE OR SEEPAGE

NOTE: THE LOG OF SUBSURFACE CONDITIONS SHOWN HEREON APPLIES ONLY AT THE SPECIFIC BORING OR TRENCH LOCATION AND AT THE DATE INDICATED. IT IS NOT WARRANTED TO BE REPRESENTATIVE OF SUBSURFACE CONDITIONS AT OTHER LOCATIONS AND TIMES.

PROJECT NO. 06847-42-01

BORING LB 4

ELEV. (MSL.) 476 DATE COMPLETED 8/28/02

EQUIPMENT SOILMEC 108 TRUCK MT

DEPTH IN FEET	SAMPLE NO.	LITHOLOGY	GROUNDWATER	SOIL CLASS (USCS)	MATERIAL DESCRIPTION	PENETRATION RESISTANCE (BLOWS/FT.)	DRY DENSITY (P.C.F.)	MOISTURE CONTENT (%)
30					-Horizontal scour-contact			
32				SM	**SAN DIEGO FORMATION** Dense, damp, light yellow brown-tan, Silty, fine to medium SANDSTONE -Horizontal contact			
34 36				GP-SP	Very dense, moist, medium brown-olive, Sandy coarse GRAVEL			
38				SM	Dense, damp, light yellow brown-tan, Silty, fine to medium SANDSTONE			
40 42 44 46				GP-SP	Very dense, moist, medium to dark brown, Sandy coarse GRAVEL, with trace clay -Very irregular (undulating), approximately horizontal scour-contact			
48 50 52					Medium dense, damp to humid, light to medium brown (mottled) Silty medium SAND, with angular rip-up clasts of siltstone and sandstone (intraformational breccia?), micaceous -Very irregular, approximately horizontal scour-contact			
54 56	LB4-1 ◣ LB4-2 ⊠			ML-CL	**OTAY FORMATION** Dense, damp to moist, light olive-gray-brown, Clayey SILTSTONE with random steep discontinuous joints, and thin (1" to 3" thick) claystone layers with horizontal laminations N60W, vertical joint; pinches out less than 24 inches along strike and dip, and is truncated by San Diego Formation scour-contact above, at 53.5 feet			
58				ML	Dense, damp, light olive-gray, Sandy SILTSTONE			

Figure A-9, Log of Boring LB 4

SOM

SAMPLE SYMBOLS
- ☐ ... SAMPLING UNSUCCESSFUL
- ◧ ... STANDARD PENETRATION TEST
- ■ ... DRIVE SAMPLE (UNDISTURBED)
- ⊠ ... DISTURBED OR BAG SAMPLE
- ◣ ... CHUNK SAMPLE
- ▼ ... WATER TABLE OR SEEPAGE

NOTE: THE LOG OF SUBSURFACE CONDITIONS SHOWN HEREON APPLIES ONLY AT THE SPECIFIC BORING OR TRENCH LOCATION AND AT THE DATE INDICATED. IT IS NOT WARRANTED TO BE REPRESENTATIVE OF SUBSURFACE CONDITIONS AT OTHER LOCATIONS AND TIMES.

PROJECT NO. 06847-42-01

BORING LB 4

ELEV. (MSL.) 476 DATE COMPLETED 8/28/02

EQUIPMENT SOILMEC 108 TRUCK MT

DEPTH IN FEET	SAMPLE NO.	LITHOLOGY	GROUNDWATER	SOIL CLASS (USCS)	MATERIAL DESCRIPTION	PENETRATION RESISTANCE (BLOWS/FT.)	DRY DENSITY (P.C.F.)	MOISTURE CONTENT (%)
60		▨						
62					BORING TERMINATED AT 62 FEET			

Figure A-10, Log of Boring LB 4

SOM

SAMPLE SYMBOLS
☐ ... SAMPLING UNSUCCESSFUL
◧ ... STANDARD PENETRATION TEST
■ ... DRIVE SAMPLE (UNDISTURBED)
⊠ ... DISTURBED OR BAG SAMPLE
◪ ... CHUNK SAMPLE
▼ ... WATER TABLE OR SEEPAGE

NOTE: THE LOG OF SUBSURFACE CONDITIONS SHOWN HEREON APPLIES ONLY AT THE SPECIFIC BORING OR TRENCH LOCATION AND AT THE DATE INDICATED. IT IS NOT WARRANTED TO BE REPRESENTATIVE OF SUBSURFACE CONDITIONS AT OTHER LOCATIONS AND TIMES.

PROJECT NO. 06847-42-01

BORING LB 5

ELEV. (MSL.) 477 DATE COMPLETED 8/30/02

EQUIPMENT SOILMEC 108 TRUCK MT

DEPTH IN FEET	SAMPLE NO.	LITHOLOGY	GROUNDWATER	SOIL CLASS (USCS)	MATERIAL DESCRIPTION	PENETRATION RESISTANCE (BLOWS/FT.)	DRY DENSITY (P.C.F.)	MOISTURE CONTENT (%)
0					**TERRACE DEPOSIT CLAY** Stiff, damp to moist, dark brown, Sandy CLAY, with some cobble			
2								
4				CL				
6					-Irregular, approximately horizontal contact			
8					**TERRACE DEPOSIT GRAVEL** Medium dense to dense, medium to dark reddish brown, very Gravelly SAND; some silt, trace clay			
10								
12				SM-GM				
14								
16								
18								
20					Very dense, damp, medium to dark reddish brown, Sandy, very coarse GRAVEL, with 8 to 18 inches diameter cobbles; some silt			
22								
24				GM				
26								
28								

Figure A-11, Log of Boring LB 5

SOM

SAMPLE SYMBOLS	☐ ... SAMPLING UNSUCCESSFUL	◧ ... STANDARD PENETRATION TEST	■ ... DRIVE SAMPLE (UNDISTURBED)
	▨ ... DISTURBED OR BAG SAMPLE	◪ ... CHUNK SAMPLE	▼ ... WATER TABLE OR SEEPAGE

NOTE: THE LOG OF SUBSURFACE CONDITIONS SHOWN HEREON APPLIES ONLY AT THE SPECIFIC BORING OR TRENCH LOCATION AND AT THE DATE INDICATED. IT IS NOT WARRANTED TO BE REPRESENTATIVE OF SUBSURFACE CONDITIONS AT OTHER LOCATIONS AND TIMES.

PROJECT NO. 06847-42-01

BORING LB 5

ELEV. (MSL.) 477 DATE COMPLETED 8/30/02

EQUIPMENT SOILMEC 108 TRUCK MT

DEPTH IN FEET	SAMPLE NO.	LITHOLOGY	GROUNDWATER	SOIL CLASS (USCS)	MATERIAL DESCRIPTION	PENETRATION RESISTANCE (BLOWS/FT.)	DRY DENSITY (P.C.F.)	MOISTURE CONTENT (%)
30								
32								
34								
36								
38				GM				
40								
42								
44								
46								
48					-Sharp, horizontal scour-contact at 48.5 feet			
50					**SAN DIEGO FORMATION** Dense, damp, light tan-brown, Silty, fine to medium SANDSTONE; massive to cross-laminated, micaceous			
52				SM	-6" pebble conglomerate layer, horizontally imbricated, rounded to subrounded dark volcanic rock			
54								
56					-Contact transitional over 6 inches and approximately horizontal			
58				SM-ML	**OTAY FORMATION** Very dense, damp, light olive-gray-brown, very Silty, very fine SANDSTONE, with some clay lenses			

Figure A-12, Log of Boring LB 5

SOM

SAMPLE SYMBOLS			
	☐ ... SAMPLING UNSUCCESSFUL	◧ ... STANDARD PENETRATION TEST	■ ... DRIVE SAMPLE (UNDISTURBED)
	▨ ... DISTURBED OR BAG SAMPLE	◣ ... CHUNK SAMPLE	▼ ... WATER TABLE OR SEEPAGE

NOTE: THE LOG OF SUBSURFACE CONDITIONS SHOWN HEREON APPLIES ONLY AT THE SPECIFIC BORING OR TRENCH LOCATION AND AT THE DATE INDICATED. IT IS NOT WARRANTED TO BE REPRESENTATIVE OF SUBSURFACE CONDITIONS AT OTHER LOCATIONS AND TIMES.

PROJECT NO. 06847-42-01

BORING LB 5

ELEV. (MSL.) 477 DATE COMPLETED 8/30/02

EQUIPMENT SOILMEC 108 TRUCK MT

DEPTH IN FEET	SAMPLE NO.	LITHOLOGY	GROUNDWATER	SOIL CLASS (USCS)	MATERIAL DESCRIPTION	PENETRATION RESISTANCE (BLOWS/FT.)	DRY DENSITY (P.C.F.)	MOISTURE CONTENT (%)
60		▨						
					BORING TERMINATED AT 61 FEET			

Figure A-13, Log of Boring LB 5

SOM

SAMPLE SYMBOLS

☐ ... SAMPLING UNSUCCESSFUL
◧ ... STANDARD PENETRATION TEST
■ ... DRIVE SAMPLE (UNDISTURBED)
⊠ ... DISTURBED OR BAG SAMPLE
◣ ... CHUNK SAMPLE
▼ ... WATER TABLE OR SEEPAGE

RACE DEPOSIT CLAY

NOTE: THE LOG OF SUBSURFACE CONDITIONS SHOWN HEREON APPLIES ONLY AT THE SPECIFIC BORING OR TRENCH LOCATION AND AT THE DATE INDICATED. IT IS NOT WARRANTED TO BE REPRESENTATIVE OF SUBSURFACE CONDITIONS AT OTHER LOCATIONS AND TIMES.

PROJECT NO. 06847-42-01

GY TER

TRENCH T 18

PROJECT NO. 06847-42-01

BORING LB 6

ELEV. (MSL.) **496** DATE COMPLETED **8/30/02**

EQUIPMENT **SOILMEC 108 TRUCK MT**

DEPTH IN FEET	SAMPLE NO.	LITHOLOGY	GROUNDWATER	SOIL CLASS (USCS)	MATERIAL DESCRIPTION	PENETRATION RESISTANCE (BLOWS/FT.)	DRY DENSITY (P.C.F.)	MOISTURE CONTENT (%)
0 2 4 6				CL	**TERRACE DEPOSIT CLAY** Stiff, moist, dark yellow brown, Sandy CLAY, with some fine gravel, massive			
8 10				SM	**TERRACE DEPOSIT GRAVEL** Medium dense to dense, damp, medium reddish brown, very Gravelly, Silty, medium to coarse SAND with trace clay			
12 14 16 18 20 22 24 26 28				GP-SP	Dense, damp, medium reddish brown, very Sandy coarse GRAVEL, with cobbles 6 to 8 inches, low cohesion, (when disturbed), with some sloughing			
				SP				

Figure A-14, Log of Boring LB 6

SOM

SAMPLE SYMBOLS
- ☐ ... SAMPLING UNSUCCESSFUL
- ▨ ... DISTURBED OR BAG SAMPLE
- ◧ ... STANDARD PENETRATION TEST
- ◪ ... CHUNK SAMPLE
- ■ ... DRIVE SAMPLE (UNDISTURBED)
- ▼ ... WATER TABLE OR SEEPAGE

NOTE: THE LOG OF SUBSURFACE CONDITIONS SHOWN HEREON APPLIES ONLY AT THE SPECIFIC BORING OR TRENCH LOCATION AND AT THE DATE INDICATED. IT IS NOT WARRANTED TO BE REPRESENTATIVE OF SUBSURFACE CONDITIONS AT OTHER LOCATIONS AND TIMES.

PROJECT NO. 06847-42-01

BORING LB 6

ELEV. (MSL.) 496 DATE COMPLETED 8/30/02

EQUIPMENT SOILMEC 108 TRUCK MT

DEPTH IN FEET	SAMPLE NO.	LITHOLOGY	GROUNDWATER	SOIL CLASS (USCS)	MATERIAL DESCRIPTION	PENETRATION RESISTANCE (BLOWS/FT.)	DRY DENSITY (P.C.F.)	MOISTURE CONTENT (%)
30 32 34 36	LB6-1 ▨			SP	Medium dense to dense, damp, light reddish brown, Gravelly coarse SAND -Sloughing and non cohesive (when disturbed), crossbedded			
38 40 42 44 46 48 50 52 54 56 58				GM	Very dense, damp to moist, medium brown to reddish brown, Sandy, very coarse GRAVEL -Oversize cobbles 8 to 20 inches diameter in slightly silty coarse sand matrix, with trace clay			

Figure A-15, Log of Boring LB 6

SOM

SAMPLE SYMBOLS			
	☐ ... SAMPLING UNSUCCESSFUL	◧ ... STANDARD PENETRATION TEST	■ ... DRIVE SAMPLE (UNDISTURBED)
	▨ ... DISTURBED OR BAG SAMPLE	◪ ... CHUNK SAMPLE	▼ ... WATER TABLE OR SEEPAGE

NOTE: THE LOG OF SUBSURFACE CONDITIONS SHOWN HEREON APPLIES ONLY AT THE SPECIFIC BORING OR TRENCH LOCATION AND AT THE DATE INDICATED. IT IS NOT WARRANTED TO BE REPRESENTATIVE OF SUBSURFACE CONDITIONS AT OTHER LOCATIONS AND TIMES.

PROJECT NO. 06847-42-01

BORING LB 6

ELEV. (MSL.) 496 DATE COMPLETED 8/30/02

EQUIPMENT SOILMEC 108 TRUCK MT

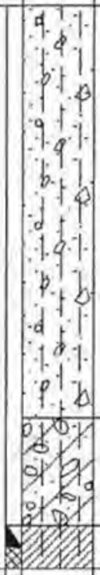

DEPTH IN FEET	SAMPLE NO.	LITHOLOGY	GROUNDWATER	SOIL CLASS (USCS)	MATERIAL DESCRIPTION	PENETRATION RESISTANCE (BLOWS/FT.)	DRY DENSITY (P.C.F.)	MOISTURE CONTENT (%)
60								
62								
64				GM				
66								
68								
70					Becomes Clayey to Silty, with fine to medium rounded conglomerate layers, horizontally imbricated -Approximately horizontal to undulating scour-deposition contact			
72	LB6-2	◣		CL	**OTAY FORMATION** Hard, moist, light olive-gray, Silty CLAYSTONE; massive, blocky		72.8	40.5
	LB6-3	▨						

BORING TERMINATED AT 73 FEET

Figure A-16, Log of Boring LB 6

SOM

SAMPLE SYMBOLS			
	☐ ... SAMPLING UNSUCCESSFUL	◧ ... STANDARD PENETRATION TEST	■ ... DRIVE SAMPLE (UNDISTURBED)
	▨ ... DISTURBED OR BAG SAMPLE	◣ ... CHUNK SAMPLE	▼ ... WATER TABLE OR SEEPAGE

NOTE: THE LOG OF SUBSURFACE CONDITIONS SHOWN HEREON APPLIES ONLY AT THE SPECIFIC BORING OR TRENCH LOCATION AND AT THE DATE INDICATED. IT IS NOT WARRANTED TO BE REPRESENTATIVE OF SUBSURFACE CONDITIONS AT OTHER LOCATIONS AND TIMES.

PROJECT NO. 06847-42-01

BORING LB 7

ELEV. (MSL.) 475 DATE COMPLETED 9/3/33

EQUIPMENT **SOILMEC 108 TRUCK MT**

DEPTH IN FEET	SAMPLE NO.	LITHOLOGY	GROUNDWATER	SOIL CLASS (USCS)	MATERIAL DESCRIPTION	PENETRATION RESISTANCE (BLOWS/FT.)	DRY DENSITY (P.C.F.)	MOISTURE CONTENT (%)
0 2 4 6 8 10				SM-GM	**TERRACE DEPOSIT GRAVEL** Medium dense to dense, dry to humid, light reddish brown, very Gravelly, Silty medium SAND -Massive to approximately horizontal bedding, with horizontally imbricated cobble layers -Gravel becomes coarser (6 to 8 inches diameter)			
12 14 16 18 20 22				GM	Dense to very dense, damp, medium reddish brown, Sandy, very coarse GRAVEL, with some silt, trace clay and oversize cobbles (8 to 20 inches diameter) -Irregular scour-contact; overall approximately horizontal attitude			
24 26 28				SM	**SAN DIEGO FORMATION** Dense, damp, light brown-olive, Silty fine SANDSTONE, micaceous -Vertical discontinuous joint with 1/16" to 1/8" clay lining NE-SW strike, terminated by overlying terrace deposit contact and extends 2 to 3 feet in depth			
				SP	Dense, humid to damp, light tan-brown, medium to			

Figure A-17, Log of Boring LB 7

SOM

SAMPLE SYMBOLS
☐ ... SAMPLING UNSUCCESSFUL ◧ ... STANDARD PENETRATION TEST ■ ... DRIVE SAMPLE (UNDISTURBED)
▨ ... DISTURBED OR BAG SAMPLE ◪ ... CHUNK SAMPLE ▼ ... WATER TABLE OR SEEPAGE

NOTE: THE LOG OF SUBSURFACE CONDITIONS SHOWN HEREON APPLIES ONLY AT THE SPECIFIC BORING OR TRENCH LOCATION AND AT THE DATE INDICATED. IT IS NOT WARRANTED TO BE REPRESENTATIVE OF SUBSURFACE CONDITIONS AT OTHER LOCATIONS AND TIMES.

PROJECT NO. 06847-42-01

BORING LB 7

ELEV. (MSL.) 475 DATE COMPLETED 9/3/33

EQUIPMENT SOILMEC 108 TRUCK MT

DEPTH IN FEET	SAMPLE NO.	LITHOLOGY	GROUNDWATER	SOIL CLASS (USCS)	MATERIAL DESCRIPTION	PENETRATION RESISTANCE (BLOWS/FT.)	DRY DENSITY (P.C.F.)	MOISTURE CONTENT (%)
30					coarse SANDSTONE, with thin horizontal layer of bentonitic claystone rip-up clasts at 29 feet (approximately 3" thick) -Approximately horizontal contact			
32 34				SM	Dense, damp, light brown-tan, very Silty fine SANDSTONE -Approximately horizontal bedding-contact			
36				SM	Dense, damp, medium red-brown, Silty, medium to coarse SANDSTONE			

BORING TERMINATED AT 36.5 FEET

Figure A-18, Log of Boring LB 7

SOM

SAMPLE SYMBOLS
☐ ... SAMPLING UNSUCCESSFUL
▨ ... DISTURBED OR BAG SAMPLE
◧ ... STANDARD PENETRATION TEST
◩ ... CHUNK SAMPLE
■ ... DRIVE SAMPLE (UNDISTURBED)
▼ ... WATER TABLE OR SEEPAGE

NOTE: THE LOG OF SUBSURFACE CONDITIONS SHOWN HEREON APPLIES ONLY AT THE SPECIFIC BORING OR TRENCH LOCATION AND AT THE DATE INDICATED. IT IS NOT WARRANTED TO BE REPRESENTATIVE OF SUBSURFACE CONDITIONS AT OTHER LOCATIONS AND TIMES.

PROJECT NO. 06847-42-01

TRENCH T 1

ELEV. (MSL.) **501** DATE COMPLETED **8/22/02**

EQUIPMENT **JD 510 RUBBER TIRE**

DEPTH IN FEET	SAMPLE NO.	LITHOLOGY	GROUNDWATER	SOIL CLASS (USCS)	MATERIAL DESCRIPTION	PENETRATION RESISTANCE (BLOWS/FT.)	DRY DENSITY (P.C.F.)	MOISTURE CONTENT (%)
0				CH	**TERRACE DEPOSIT CLAY** Hard, dry, dark yellowish brown, CLAY, cracking, rootlets; topsoil zone			
2	▨ T1-1			CH	Hard, moist to damp, dark yellowish brown, CLAY			
4 6 8 10	▨ T1-2			SW	**TERRACE DEPOSIT GRAVEL** Dense, dry to moist, dark yellowish orange, well graded SAND with rounded gravel, less than 10% rounded cobbles and boulders to 1 foot diameter; caving.			

TRENCH TERMINATED AT 11 FEET

Figure A-19, Log of Trench T 1

SOM

SAMPLE SYMBOLS

☐ ... SAMPLING UNSUCCESSFUL
▨ ... DISTURBED OR BAG SAMPLE
◧ ... STANDARD PENETRATION TEST
◩ ... CHUNK SAMPLE
■ ... DRIVE SAMPLE (UNDISTURBED)
▼ ... WATER TABLE OR SEEPAGE

NOTE: THE LOG OF SUBSURFACE CONDITIONS SHOWN HEREON APPLIES ONLY AT THE SPECIFIC BORING OR TRENCH LOCATION AND AT THE DATE INDICATED. IT IS NOT WARRANTED TO BE REPRESENTATIVE OF SUBSURFACE CONDITIONS AT OTHER LOCATIONS AND TIMES.

PROJECT NO. 06847-42-01

TRENCH T 2

ELEV. (MSL.) 490 DATE COMPLETED 8/22/02

EQUIPMENT **JD 510 RUBBER TIRE**

DEPTH IN FEET	SAMPLE NO.	LITHOLOGY	GROUNDWATER	SOIL CLASS (USCS)	MATERIAL DESCRIPTION	PENETRATION RESISTANCE (BLOWS/FT.)	DRY DENSITY (P.C.F.)	MOISTURE CONTENT (%)
0		▨		CH	**TERRACE DEPOSIT CLAY** Hard, dry, dark yellowish brown, CLAY, cracking, and rootlets; topsoil zone			
2		▨		CH	Hard, moist, dark yellowish brown, CLAY			
4		░			**TERRACE DEPOSIT GRAVEL** Dense, dry to moist, dark yellowish orange, well graded SAND with rounded gravel. 10 to 20% rounded cobbles and boulders up to 2 foot diameter, caving			
6		░		SW				
8		░						
10					TRENCH TERMINATED AT 10 FEET			

Figure A-20, Log of Trench T 2

SOM

SAMPLE SYMBOLS	☐ ... SAMPLING UNSUCCESSFUL	◧ ... STANDARD PENETRATION TEST	■ ... DRIVE SAMPLE (UNDISTURBED)
	▩ ... DISTURBED OR BAG SAMPLE	◪ ... CHUNK SAMPLE	▼ ... WATER TABLE OR SEEPAGE

NOTE: THE LOG OF SUBSURFACE CONDITIONS SHOWN HEREON APPLIES ONLY AT THE SPECIFIC BORING OR TRENCH LOCATION AND AT THE DATE INDICATED. IT IS NOT WARRANTED TO BE REPRESENTATIVE OF SUBSURFACE CONDITIONS AT OTHER LOCATIONS AND TIMES.

PROJECT NO. 06847-42-01

TRENCH T 3

ELEV. (MSL.) 490 DATE COMPLETED 8/22/02

EQUIPMENT JD 510 RUBBER TIRE

DEPTH IN FEET	SAMPLE NO.	LITHOLOGY	GROUNDWATER	SOIL CLASS (USCS)	MATERIAL DESCRIPTION	PENETRATION RESISTANCE (BLOWS/FT.)	DRY DENSITY (P.C.F.)	MOISTURE CONTENT (%)
0	T3-1	▨		CH	**TOPSOIL** Hard, dry, dark yellowish brown, CLAY, cracking, rootlets			
2					**TERRACE DEPOSIT GRAVEL** Dense, dry to moist, dark yellowish orange, Clayey, well graded SAND with gravel, approximately 20% rounded cobbles and boulders up to 1 foot diameter; scattered caliche			
4								
6	T3-2	▨		SC				
8								
10					TRENCH TERMINATED AT 10 FEET			

Figure A-21, Log of Trench T 3

SOM

SAMPLE SYMBOLS			
	☐ ... SAMPLING UNSUCCESSFUL	◧ ... STANDARD PENETRATION TEST	■ ... DRIVE SAMPLE (UNDISTURBED)
	▨ ... DISTURBED OR BAG SAMPLE	◪ ... CHUNK SAMPLE	▼ ... WATER TABLE OR SEEPAGE

NOTE: THE LOG OF SUBSURFACE CONDITIONS SHOWN HEREON APPLIES ONLY AT THE SPECIFIC BORING OR TRENCH LOCATION AND AT THE DATE INDICATED. IT IS NOT WARRANTED TO BE REPRESENTATIVE OF SUBSURFACE CONDITIONS AT OTHER LOCATIONS AND TIMES.

PROJECT NO. 06847-42-01

TRENCH T 4

ELEV. (MSL.) 496 DATE COMPLETED 8/22/02

EQUIPMENT **JD 510 RUBBER TIRE**

DEPTH IN FEET	SAMPLE NO.	LITHOLOGY	GROUNDWATER	SOIL CLASS (USCS)	MATERIAL DESCRIPTION	PENETRATION RESISTANCE (BLOWS/FT.)	DRY DENSITY (P.C.F.)	MOISTURE CONTENT (%)
0				CH	**TERRACE DEPOSIT CLAY** Hard, dry, dark yellowish brown, CLAY, cracking, roots; topsoil zone			
2 4 6				CH	Hard, moist, dark yellowish brown, CLAY			
8 10				SW	**TERRACE DEPOSIT GRAVEL** Dense, moist, dark yellowish orange, well graded SAND with rounded gravel; approximately 10 to 20% rounded cobbles and boulders up to 1 foot diameter			
					TRENCH TERMINATED AT 10 FEET			

Figure A-22, Log of Trench T 4

SOM

SAMPLE SYMBOLS

☐ ... SAMPLING UNSUCCESSFUL
◧ ... STANDARD PENETRATION TEST
■ ... DRIVE SAMPLE (UNDISTURBED)
▨ ... DISTURBED OR BAG SAMPLE
◪ ... CHUNK SAMPLE
▼ ... WATER TABLE OR SEEPAGE

NOTE: THE LOG OF SUBSURFACE CONDITIONS SHOWN HEREON APPLIES ONLY AT THE SPECIFIC BORING OR TRENCH LOCATION AND AT THE DATE INDICATED. IT IS NOT WARRANTED TO BE REPRESENTATIVE OF SUBSURFACE CONDITIONS AT OTHER LOCATIONS AND TIMES.

PROJECT NO. 06847-42-01

TRENCH T 5

ELEV. (MSL.) 492 DATE COMPLETED 8/22/02

EQUIPMENT JD 510 RUBBER TIRE

DEPTH IN FEET	SAMPLE NO.	LITHOLOGY	GROUNDWATER	SOIL CLASS (USCS)	MATERIAL DESCRIPTION	PENETRATION RESISTANCE (BLOWS/FT.)	DRY DENSITY (P.C.F.)	MOISTURE CONTENT (%)
0				CH	**TERRACE DEPOSIT CLAY** Firm to hard, damp to dry, dark yellowish brown, CLAY; topsoil zone			
2 4	T5-1 ◣ T5-2 ▨ T5-3 ◣			CH	Hard, moist, moderate yellowish brown, CLAY			
6	T5-4 ▨			SW	**TERRACE DEPOSIT GRAVEL** Dense, moist, dark yellowish orange, well graded SAND with rounded gravel; approximately 10 to 20% rounded cobbles and boulders to 1 foot diameter			
8 10	T5-5 ▨			SW-CH	SAND interbedded with firm, yellowish gray clay beds			
12 14				SW	No clay interbeds			

TRENCH TERMINATED AT 15 FEET

Figure A-23, Log of Trench T 5

SOM

SAMPLE SYMBOLS

☐ ... SAMPLING UNSUCCESSFUL
◧ ... STANDARD PENETRATION TEST
■ ... DRIVE SAMPLE (UNDISTURBED)
▨ ... DISTURBED OR BAG SAMPLE
◣ ... CHUNK SAMPLE
▼ ... WATER TABLE OR SEEPAGE

NOTE: THE LOG OF SUBSURFACE CONDITIONS SHOWN HEREON APPLIES ONLY AT THE SPECIFIC BORING OR TRENCH LOCATION AND AT THE DATE INDICATED. IT IS NOT WARRANTED TO BE REPRESENTATIVE OF SUBSURFACE CONDITIONS AT OTHER LOCATIONS AND TIMES.

PROJECT NO. 06847-42-01

TRENCH T 6

ELEV. (MSL.) **489** DATE COMPLETED **8/22/02**

EQUIPMENT **JD 510 RUBBER TIRE**

DEPTH IN FEET	SAMPLE NO.	LITHOLOGY	GROUNDWATER	SOIL CLASS (USCS)	MATERIAL DESCRIPTION	PENETRATION RESISTANCE (BLOWS/FT.)	DRY DENSITY (P.C.F.)	MOISTURE CONTENT (%)
0		▨		CH	**TERRACE DEPOSIT CLAY** Firm to hard, damp to dry, dark yellowish brown, CLAY, abundant soil carbonate; topsoil zone			
2 4		▨		CH	Firm to hard, moist, moderate olive brown, CLAY			
6 8 10		▨		SW-SC	**TERRACE DEPOSIT GRAVEL** Dense, moist, dark to pale yellowish orange, well graded SAND with clay and fine and coarse gravel; scattered cobbles, less than 8 inches diameter			
12					TRENCH TERMINATED AT 12 FEET			

Figure A-24, Log of Trench T 6

SOM

SAMPLE SYMBOLS

☐ ... SAMPLING UNSUCCESSFUL ◧ ... STANDARD PENETRATION TEST ■ ... DRIVE SAMPLE (UNDISTURBED)

▩ ... DISTURBED OR BAG SAMPLE ◪ ... CHUNK SAMPLE ▼ ... WATER TABLE OR SEEPAGE

NOTE: THE LOG OF SUBSURFACE CONDITIONS SHOWN HEREON APPLIES ONLY AT THE SPECIFIC BORING OR TRENCH LOCATION AND AT THE DATE INDICATED. IT IS NOT WARRANTED TO BE REPRESENTATIVE OF SUBSURFACE CONDITIONS AT OTHER LOCATIONS AND TIMES.

PROJECT NO. 06847-42-01

TRENCH T 7

ELEV. (MSL.) **481** DATE COMPLETED **8/22/02**

EQUIPMENT **JD 510 RUBBER TIRE**

DEPTH IN FEET	SAMPLE NO.	LITHOLOGY	GROUNDWATER	SOIL CLASS (USCS)	MATERIAL DESCRIPTION	PENETRATION RESISTANCE (BLOWS/FT.)	DRY DENSITY (P.C.F.)	MOISTURE CONTENT (%)
0				CH	**TERRACE DEPOSIT CLAY** Firm to hard, dry, dark yellowish brown, CLAY, abundant soil carbonate; topsoil zone			
2	◣ T7-1			CH	Hard, damp to dry, dark yellowish brown, CLAY			
4	◣ T7-2 ▨ T7-3			CH	Becomes moist, moderate yellowish brown, CLAY with sand			
6 8 10	▨ T7-4			SW	**TERRACE DEPOSIT GRAVEL** Dense, moist, moderate yellowish brown, well graded, fine to coarse SAND with rounded, fine to coarse gravel, approximately 10 to 20% rounded cobbles and boulders up to 1 foot diameter, caving			
					TRENCH TERMINATED AT 11 FEET			

Figure A-25, Log of Trench T 7

SOM

SAMPLE SYMBOLS

☐ ... SAMPLING UNSUCCESSFUL

◧ ... STANDARD PENETRATION TEST

■ ... DRIVE SAMPLE (UNDISTURBED)

▨ ... DISTURBED OR BAG SAMPLE

◣ ... CHUNK SAMPLE

▼ ... WATER TABLE OR SEEPAGE

NOTE: THE LOG OF SUBSURFACE CONDITIONS SHOWN HEREON APPLIES ONLY AT THE SPECIFIC BORING OR TRENCH LOCATION AND AT THE DATE INDICATED. IT IS NOT WARRANTED TO BE REPRESENTATIVE OF SUBSURFACE CONDITIONS AT OTHER LOCATIONS AND TIMES.

PROJECT NO. 06847-42-01

TRENCH T 8

ELEV. (MSL.) **476** DATE COMPLETED **8/22/02**

EQUIPMENT **JD 510 RUBBER TIRE**

DEPTH IN FEET	SAMPLE NO.	LITHOLOGY	GROUNDWATER	SOIL CLASS (USCS)	MATERIAL DESCRIPTION	PENETRATION RESISTANCE (BLOWS/FT.)	DRY DENSITY (P.C.F.)	MOISTURE CONTENT (%)
0				CH	**TERRACE DEPOSIT CLAY** Firm, dark yellowish brown, CLAY, abundant soil carbonate, roots; topsoil zone			
2 4 6 8 10	T8-1 ▨			CH	Firm to hard, moist, moderate olive brown, CLAY with gravel, scattered cobbles less than 8 inch diameter			
12	T8-2 ▨			SC	**TERRACE DEPOSIT GRAVEL** Dense, moist, moderate brown, Clayey SAND with rounded gravel, approximately 20% cobbles and boulders up to 18 inches diameter			
14					TRENCH TERMINATED AT 14 FEET			

Figure A-26, Log of Trench T 8

SOM

SAMPLE SYMBOLS	☐ ... SAMPLING UNSUCCESSFUL	◧ ... STANDARD PENETRATION TEST	■ ... DRIVE SAMPLE (UNDISTURBED)
	▨ ... DISTURBED OR BAG SAMPLE	◣ ... CHUNK SAMPLE	▼ ... WATER TABLE OR SEEPAGE

NOTE: THE LOG OF SUBSURFACE CONDITIONS SHOWN HEREON APPLIES ONLY AT THE SPECIFIC BORING OR TRENCH LOCATION AND AT THE DATE INDICATED. IT IS NOT WARRANTED TO BE REPRESENTATIVE OF SUBSURFACE CONDITIONS AT OTHER LOCATIONS AND TIMES.

PROJECT NO. 06847-42-01

TRENCH T 9

ELEV. (MSL.) **474** DATE COMPLETED **8/22/02**

EQUIPMENT **JD 510 RUBBER TIRE**

DEPTH IN FEET	SAMPLE NO.	LITHOLOGY	GROUNDWATER	SOIL CLASS (USCS)	MATERIAL DESCRIPTION	PENETRATION RESISTANCE (BLOWS/FT.)	DRY DENSITY (P.C.F.)	MOISTURE CONTENT (%)
0		▨		CH	**TERRACE DEPOSIT CLAY** Hard, dry, dark yellowish brown, CLAY, cracks, roots; topsoil zone			
2		▨			Hard, moist, dark yellowish brown, CLAY, approximately 10% rounded gravel above 3 feet. No gravel below 3 feet			
4	T9-1 ◣	▨						
6		▨		CH				
8		▨						
10		▨						
12				SC	**TERRACE DEPOSIT GRAVEL** Dense, moist, moderate brown, Clayey SAND with rounded gravel, approximately 20% cobbles and boulders up to 18 inches diameter			

TRENCH TERMINATED AT 12 FEET
(REFUSAL)

Figure A-27, Log of Trench T 9

SOM

SAMPLE SYMBOLS			
	☐ ... SAMPLING UNSUCCESSFUL	◧ ... STANDARD PENETRATION TEST	■ ... DRIVE SAMPLE (UNDISTURBED)
	⊠ ... DISTURBED OR BAG SAMPLE	◣ ... CHUNK SAMPLE	▼ ... WATER TABLE OR SEEPAGE

PROJECT NO. 06847-42-01

TRENCH T 10

ELEV. (MSL.) 479 DATE COMPLETED 8/22/02

EQUIPMENT JD 510 RUBBER TIRE

DEPTH IN FEET	SAMPLE NO.	LITHOLOGY	GROUNDWATER	SOIL CLASS (USCS)	MATERIAL DESCRIPTION	PENETRATION RESISTANCE (BLOWS/FT.)	DRY DENSITY (P.C.F.)	MOISTURE CONTENT (%)
0		▨		CH	**TERRACE DEPOSIT CLAY** Hard, dry, dark yellowish brown, CLAY, cracks, roots, caliche; topsoil zone			
2		▨			Firm to hard, moist, pale to dark yellowish brown, CLAY			
4	T10-1 ◣	▨						
	T10-2 ▨	▨		CH				
6		▨						
8		▨						
10	T10-3 ▨	▨		SC	**TERRACE DEPOSIT GRAVEL** Dense, moist, moderate brown, Clayey SAND with gravel, approximately 10% cobbles and boulders up to 1 foot diameter			
12					TRENCH TERMINATED AT 12 FEET			

Figure A-28, Log of Trench T 10

SOM

SAMPLE SYMBOLS			
	☐ ... SAMPLING UNSUCCESSFUL	◧ ... STANDARD PENETRATION TEST	■ ... DRIVE SAMPLE (UNDISTURBED)
	▨ ... DISTURBED OR BAG SAMPLE	◣ ... CHUNK SAMPLE	▼ ... WATER TABLE OR SEEPAGE

NOTE: THE LOG OF SUBSURFACE CONDITIONS SHOWN HEREON APPLIES ONLY AT THE SPECIFIC BORING OR TRENCH LOCATION AND AT THE DATE INDICATED. IT IS NOT WARRANTED TO BE REPRESENTATIVE OF SUBSURFACE CONDITIONS AT OTHER LOCATIONS AND TIMES.

PROJECT NO. 06847-42-01

TRENCH T 11

ELEV. (MSL.) 481 DATE COMPLETED 8/22/02

EQUIPMENT JD 510 RUBBER TIRE

DEPTH IN FEET	SAMPLE NO.	LITHOLOGY	GROUNDWATER	SOIL CLASS (USCS)	MATERIAL DESCRIPTION	PENETRATION RESISTANCE (BLOWS/FT.)	DRY DENSITY (P.C.F.)	MOISTURE CONTENT (%)
0				CH	**TERRACE DEPOSIT CLAY** Hard, dry, dark yellowish brown, CLAY, caliche and rootlets; topsoil zone			
2					Firm to hard, moist, pale yellowish brown, CLAY			
4								
6				CH				
8								
10					-1 foot boulder			
				SC	**TERRACE DEPOSIT GRAVEL** Dense, moist, moderate brown, Clayey SAND with gravel, approximately 10% rounded cobbles and boulders up to 1 foot diameter			

TRENCH TERMINATED AT 11 FEET

Figure A-29, Log of Trench T 11

SOM

SAMPLE SYMBOLS			
SAMPLE SYMBOLS	☐ ... SAMPLING UNSUCCESSFUL	◧ ... STANDARD PENETRATION TEST	■ ... DRIVE SAMPLE (UNDISTURBED)
	▨ ... DISTURBED OR BAG SAMPLE	◪ ... CHUNK SAMPLE	▼ ... WATER TABLE OR SEEPAGE

NOTE: THE LOG OF SUBSURFACE CONDITIONS SHOWN HEREON APPLIES ONLY AT THE SPECIFIC BORING OR TRENCH LOCATION AND AT THE DATE INDICATED. IT IS NOT WARRANTED TO BE REPRESENTATIVE OF SUBSURFACE CONDITIONS AT OTHER LOCATIONS AND TIMES.

PROJECT NO. 06847-42-01

TRENCH T 12

ELEV. (MSL.) 464 DATE COMPLETED 8/22/02

EQUIPMENT **JD 510 RUBBER TIRE**

DEPTH IN FEET	SAMPLE NO.	LITHOLOGY	GROUNDWATER	SOIL CLASS (USCS)	MATERIAL DESCRIPTION	PENETRATION RESISTANCE (BLOWS/FT.)	DRY DENSITY (P.C.F.)	MOISTURE CONTENT (%)
0		▨		CH	**TERRACE DEPOSIT CLAY** Hard, dry, dark yellowish brown, CLAY, caliche and roots			
2 4 6		▨		CH	Firm to hard, moist, pale yellowish brown, CLAY with rounded gravel			
8 10	T12-1 ▨	▨		SC	**TERRACE DEPOSIT CLAY** Dense, moist, moderate yellowish brown, Clayey SAND			
					TRENCH TERMINATED AT 11 FEET			

Figure A-30, Log of Trench T 12

SOM

SAMPLE SYMBOLS	☐ ... SAMPLING UNSUCCESSFUL	◧ ... STANDARD PENETRATION TEST	■ ... DRIVE SAMPLE (UNDISTURBED)
	▨ ... DISTURBED OR BAG SAMPLE	◣ ... CHUNK SAMPLE	▼ ... WATER TABLE OR SEEPAGE

NOTE: THE LOG OF SUBSURFACE CONDITIONS SHOWN HEREON APPLIES ONLY AT THE SPECIFIC BORING OR TRENCH LOCATION AND AT THE DATE INDICATED. IT IS NOT WARRANTED TO BE REPRESENTATIVE OF SUBSURFACE CONDITIONS AT OTHER LOCATIONS AND TIMES.

PROJECT NO. 06847-42-01

TRENCH T 13

ELEV. (MSL.) **478** DATE COMPLETED **8/23/02**

EQUIPMENT **JD 510 RUBBER TIRE**

DEPTH IN FEET	SAMPLE NO.	LITHOLOGY	GROUNDWATER	SOIL CLASS (USCS)	MATERIAL DESCRIPTION	PENETRATION RESISTANCE (BLOWS/FT.)	DRY DENSITY (P.C.F.)	MOISTURE CONTENT (%)
0 – 2				SM	**TOPSOIL** Dense, dry, dark yellowish brown, Silty SAND, porous, soil cracking, roots			
2 – 6	T13-1 ▨ (at 4)			SC	**TERRACE DEPOSIT GRAVEL** Dense, moist, moderate yellowish brown, Clayey SAND, scattered rounded gravel and cobbles less than 6 inches diameter			
6					TRENCH TERMINATED AT 6 FEET			

Figure A-31, Log of Trench T 13

SOM

SAMPLE SYMBOLS

☐ ... SAMPLING UNSUCCESSFUL

▨ ... DISTURBED OR BAG SAMPLE

◧ ... STANDARD PENETRATION TEST

◪ ... CHUNK SAMPLE

■ ... DRIVE SAMPLE (UNDISTURBED)

▼ ... WATER TABLE OR SEEPAGE

NOTE: THE LOG OF SUBSURFACE CONDITIONS SHOWN HEREON APPLIES ONLY AT THE SPECIFIC BORING OR TRENCH LOCATION AND AT THE DATE INDICATED. IT IS NOT WARRANTED TO BE REPRESENTATIVE OF SUBSURFACE CONDITIONS AT OTHER LOCATIONS AND TIMES.

PROJECT NO. 06847-42-01

TRENCH T 14

ELEV. (MSL.) **480** DATE COMPLETED **8/23/02**

EQUIPMENT **JD 510 RUBBER TIRE**

DEPTH IN FEET	SAMPLE NO.	LITHOLOGY	GROUNDWATER	SOIL CLASS (USCS)	MATERIAL DESCRIPTION	PENETRATION RESISTANCE (BLOWS/FT.)	DRY DENSITY (P.C.F.)	MOISTURE CONTENT (%)
0				SM	**TOPSOIL** Dense, dry, dark yellowish brown, Silty SAND, porous, soil cracking, roots			
2	▨ T14-1				**TERRACE DEPOSIT GRAVEL** Dense, moist, light to moderate brown, Silty fine SAND, partially cemented in places Moderate olive brown below 4 feet			
4	▨ T14-2			SM				
6	◣ T14-3			CL	Hard, damp, light olive gray, CLAY			
8					Very dense, partially cemented in places, damp to moist, dusky yellow, light olive brown and moderate olive brown, fine SAND			
10	▨ T14-4			SP				
12								
14					-1 foot thick clayey sand with rounded gravel, scattered round cobbles less than 6 inches diameter			
16	◣ T14-5				-2 foot diameter boulder at 15 feet Predominantly light olive gray below 15 feet			
					TRENCH TERMINATED AT 16 FEET			

Figure A-32, Log of Trench T 14

SOM

SAMPLE SYMBOLS

☐ ... SAMPLING UNSUCCESSFUL

▨ ... DISTURBED OR BAG SAMPLE

◧ ... STANDARD PENETRATION TEST

◣ ... CHUNK SAMPLE

■ ... DRIVE SAMPLE (UNDISTURBED)

▼ ... WATER TABLE OR SEEPAGE

NOTE: THE LOG OF SUBSURFACE CONDITIONS SHOWN HEREON APPLIES ONLY AT THE SPECIFIC BORING OR TRENCH LOCATION AND AT THE DATE INDICATED. IT IS NOT WARRANTED TO BE REPRESENTATIVE OF SUBSURFACE CONDITIONS AT OTHER LOCATIONS AND TIMES.

PROJECT NO. 06847-42-01

TRENCH T 15

ELEV. (MSL.) 473 DATE COMPLETED 8/23/02

EQUIPMENT JD 510 RUBBER TIRE

DEPTH IN FEET	SAMPLE NO.	LITHOLOGY	GROUNDWATER	SOIL CLASS (USCS)	MATERIAL DESCRIPTION	PENETRATION RESISTANCE (BLOWS/FT.)	DRY DENSITY (P.C.F.)	MOISTURE CONTENT (%)
0				SM	**TOPSOIL** Dense, dry, dark yellowish brown, Silty SAND, porous, soil cracking, roots			
2 4 6 8 10				SC	**TERRACE DEPOSIT GRAVEL** Dense, moist, moderate yellowish brown, Clayey SAND with rounded gravel, approximately 25% rounded cobbles up to 1 foot diameter. Coarsens downward, approximately 50% cobbles and boulders up to 2 feet diameter below 6 feet -Light olive gray below 10 feet			
					TRENCH TERMINATED AT 11 FEET			

Figure A-33, Log of Trench T 15

SOM

SAMPLE SYMBOLS

☐ ... SAMPLING UNSUCCESSFUL

◧ ... STANDARD PENETRATION TEST

■ ... DRIVE SAMPLE (UNDISTURBED)

▨ ... DISTURBED OR BAG SAMPLE

◩ ... CHUNK SAMPLE

▼ ... WATER TABLE OR SEEPAGE

NOTE: THE LOG OF SUBSURFACE CONDITIONS SHOWN HEREON APPLIES ONLY AT THE SPECIFIC BORING OR TRENCH LOCATION AND AT THE DATE INDICATED. IT IS NOT WARRANTED TO BE REPRESENTATIVE OF SUBSURFACE CONDITIONS AT OTHER LOCATIONS AND TIMES.

PROJECT NO. 06847-42-01

DEPTH IN FEET	SAMPLE NO.	LITHOLOGY	GROUNDWATER	SOIL CLASS (USCS)	**TRENCH T 16** ELEV. (MSL.) **472** DATE COMPLETED **8/23/02** EQUIPMENT **JD 510 RUBBER TIRE**	PENETRATION RESISTANCE (BLOWS/FT.)	DRY DENSITY (P.C.F.)	MOISTURE CONTENT (%)
					MATERIAL DESCRIPTION			
0				CH	**TOPSOIL** Hard, dry, dark yellowish brown, CLAY			
2					**TERRACE DEPOSIT GRAVEL** Dense, moist, moderate yellowish brown, Clayey SAND with rounded gravel, approximately 10 to 20% rounded cobbles, less than 8 inches diameter			
4				SC				
6								
8					TRENCH TERMINATED AT 8 FEET			

Figure A-34, Log of Trench T 16

SOM

SAMPLE SYMBOLS	☐ ... SAMPLING UNSUCCESSFUL	◧ ... STANDARD PENETRATION TEST	■ ... DRIVE SAMPLE (UNDISTURBED)
	▨ ... DISTURBED OR BAG SAMPLE	◩ ... CHUNK SAMPLE	▼ ... WATER TABLE OR SEEPAGE

NOTE: THE LOG OF SUBSURFACE CONDITIONS SHOWN HEREON APPLIES ONLY AT THE SPECIFIC BORING OR TRENCH LOCATION AND AT THE DATE INDICATED. IT IS NOT WARRANTED TO BE REPRESENTATIVE OF SUBSURFACE CONDITIONS AT OTHER LOCATIONS AND TIMES.

PROJECT NO. 06847-42-01

TRENCH T 17

ELEV. (MSL.) **491** DATE COMPLETED **8/23/02**

EQUIPMENT **JD 510 RUBBER TIRE**

DEPTH IN FEET	SAMPLE NO.	LITHOLOGY	GROUNDWATER	SOIL CLASS (USCS)	MATERIAL DESCRIPTION	PENETRATION RESISTANCE (BLOWS/FT.)	DRY DENSITY (P.C.F.)	MOISTURE CONTENT (%)
0 2				SM	**TOPSOIL** Dense, dry to damp, dark yellowish brown, Silty SAND			
4 6	T17-1 ▨			SC	**TERRACE DEPOSIT GRAVEL** Dense, moist, moderate yellowish brown, Clayey SAND, scattered rounded gravel and cobbles less than 6 inches diameter			
8					TRENCH TERMINATED AT 8 FEET			

Figure A-35, Log of Trench T 17

SOM

SAMPLE SYMBOLS

☐ ... SAMPLING UNSUCCESSFUL
◧ ... STANDARD PENETRATION TEST
■ ... DRIVE SAMPLE (UNDISTURBED)
▨ ... DISTURBED OR BAG SAMPLE
◪ ... CHUNK SAMPLE
▼ ... WATER TABLE OR SEEPAGE

NOTE: THE LOG OF SUBSURFACE CONDITIONS SHOWN HEREON APPLIES ONLY AT THE SPECIFIC BORING OR TRENCH LOCATION AND AT THE DATE INDICATED. IT IS NOT WARRANTED TO BE REPRESENTATIVE OF SUBSURFACE CONDITIONS AT OTHER LOCATIONS AND TIMES.

PROJECT NO. 06847-42-01

TRENCH T 18

ELEV. (MSL.) 508 DATE COMPLETED 8/23/02

EQUIPMENT **JD 510 RUBBER TIRE**

DEPTH IN FEET	SAMPLE NO.	LITHOLOGY	GROUNDWATER	SOIL CLASS (USCS)	MATERIAL DESCRIPTION	PENETRATION RESISTANCE (BLOWS/FT.)	DRY DENSITY (P.C.F.)	MOISTURE CONTENT (%)
0				CH	**TERRACE DEPOSIT CLAY** Hard, dry, dark yellowish brown, CLAY, abundant caliche, soil cracking; topsoil zone			
2	T18-1 ▨			CH	Hard, moist, moderate yellowish brown, CLAY with sand, abundant soil, calcium sulfate or carbonate (?)			
4 6				SC/CH	Dense, moist, light olive brown, Clayey SAND/Sandy CLAY with gravel, approximately 20% rounded cobbles less than 6 inches diameter			
8 10	T18-2 ▨			SC	**TERRACE DEPOSIT GRAVEL** Dense, moist, moderate yellowish brown, Clayey SAND with gravel, approximately 10% rounded and angular cobbles less than 6 inches diameter			
					TRENCH TERMINATED AT 11 FEET			

Figure A-36, Log of Trench T 18

SOM

SAMPLE SYMBOLS	☐ ... SAMPLING UNSUCCESSFUL	◧ ... STANDARD PENETRATION TEST	■ ... DRIVE SAMPLE (UNDISTURBED)
	▨ ... DISTURBED OR BAG SAMPLE	◣ ... CHUNK SAMPLE	▼ ... WATER TABLE OR SEEPAGE

NOTE: THE LOG OF SUBSURFACE CONDITIONS SHOWN HEREON APPLIES ONLY AT THE SPECIFIC BORING OR TRENCH LOCATION AND AT THE DATE INDICATED. IT IS NOT WARRANTED TO BE REPRESENTATIVE OF SUBSURFACE CONDITIONS AT OTHER LOCATIONS AND TIMES.

PROJECT NO. 06847-42-01

TRENCH T 19

ELEV. (MSL.) **518** DATE COMPLETED **8/23/02**

EQUIPMENT **JD 510 RUBBER TIRE**

DEPTH IN FEET	SAMPLE NO.	LITHOLOGY	GROUNDWATER	SOIL CLASS (USCS)	MATERIAL DESCRIPTION	PENETRATION RESISTANCE (BLOWS/FT.)	DRY DENSITY (P.C.F.)	MOISTURE CONTENT (%)
0		▨		SC	**TOPSOIL** Dense, dry, dark yellowish brown, Clayey SAND			
2		○		GP	**TERRACE DEPOSIT GRAVEL** Predominantly cobbles and rounded boulders up to 2 feet diameter			
4 6		▨		SC	Dense, moist, moderate yellowish brown, Clayey SAND with approximately 10% rounded cobbles less than 8 inches diameter			
					TRENCH TERMINATED AT 7 FEET			

Figure A-37, Log of Trench T 19

SOM

SAMPLE SYMBOLS

☐ ... SAMPLING UNSUCCESSFUL

▨ ... DISTURBED OR BAG SAMPLE

◧ ... STANDARD PENETRATION TEST

◪ ... CHUNK SAMPLE

■ ... DRIVE SAMPLE (UNDISTURBED)

▼ ... WATER TABLE OR SEEPAGE

NOTE: THE LOG OF SUBSURFACE CONDITIONS SHOWN HEREON APPLIES ONLY AT THE SPECIFIC BORING OR TRENCH LOCATION AND AT THE DATE INDICATED. IT IS NOT WARRANTED TO BE REPRESENTATIVE OF SUBSURFACE CONDITIONS AT OTHER LOCATIONS AND TIMES.

PROJECT NO. 06847-42-01

TRENCH T 20

ELEV. (MSL.) 492 DATE COMPLETED 8/23/02

EQUIPMENT **JD 510 RUBBER TIRE**

DEPTH IN FEET	SAMPLE NO.	LITHOLOGY	GROUNDWATER	SOIL CLASS (USCS)	MATERIAL DESCRIPTION	PENETRATION RESISTANCE (BLOWS/FT.)	DRY DENSITY (P.C.F.)	MOISTURE CONTENT (%)
0				CH	**TERRACE DEPOSIT CLAY** Hard, dry, dark yellowish brown, CLAY, soil cracks; topsoil zone			
2	T20-1	▨		CH	Hard, moist, moderate yellowish brown, CLAY with sand			
4					**TERRACE DEPOSIT GRAVEL** Stiff to medium dense, moist, moderate yellowish brown, Sandy SILT/Silty fine SAND			
6	T20-2	▨		MH/SM				
8								
10				SC	Dense, moist, moderate yellowish brown, Clayey SAND with approximately 10% rounded cobbles less than 8 inches diameter			
12					TRENCH TERMINATED AT 12 FEET			

Figure A-38, Log of Trench T 20

SOM

SAMPLE SYMBOLS			
	☐ ... SAMPLING UNSUCCESSFUL	◧ ... STANDARD PENETRATION TEST	■ ... DRIVE SAMPLE (UNDISTURBED)
	▨ ... DISTURBED OR BAG SAMPLE	◪ ... CHUNK SAMPLE	▼ ... WATER TABLE OR SEEPAGE

NOTE: THE LOG OF SUBSURFACE CONDITIONS SHOWN HEREON APPLIES ONLY AT THE SPECIFIC BORING OR TRENCH LOCATION AND AT THE DATE INDICATED. IT IS NOT WARRANTED TO BE REPRESENTATIVE OF SUBSURFACE CONDITIONS AT OTHER LOCATIONS AND TIMES.

PROJECT NO. 06847-42-01

DEPTH IN FEET	SAMPLE NO.	LITHOLOGY	GROUNDWATER	SOIL CLASS (USCS)	**TRENCH T 21** ELEV. (MSL.) **483** DATE COMPLETED **8/23/02** EQUIPMENT **JD 510 RUBBER TIRE**	PENETRATION RESISTANCE (BLOWS/FT.)	DRY DENSITY (P.C.F.)	MOISTURE CONTENT (%)
					MATERIAL DESCRIPTION			
0 2	T21-1 ▩			CH	**TOPSOIL** Hard, dry to damp, dark yellowish brown, CLAY			
4				SC	**TERRACE DEPOSIT GRAVEL** Dense, moist, moderate yellowish brown, Clayey SAND with gravel, approximately 20% rounded cobbles up to 1 foot diameter			
6					TRENCH TERMINATED AT 6 FEET			

Figure A-39, Log of Trench T 21

SOM

SAMPLE SYMBOLS	☐ ... SAMPLING UNSUCCESSFUL	◧ ... STANDARD PENETRATION TEST	■ ... DRIVE SAMPLE (UNDISTURBED)
	▩ ... DISTURBED OR BAG SAMPLE	◣ ... CHUNK SAMPLE	▼ ... WATER TABLE OR SEEPAGE

NOTE: THE LOG OF SUBSURFACE CONDITIONS SHOWN HEREON APPLIES ONLY AT THE SPECIFIC BORING OR TRENCH LOCATION AND AT THE DATE INDICATED. IT IS NOT WARRANTED TO BE REPRESENTATIVE OF SUBSURFACE CONDITIONS AT OTHER LOCATIONS AND TIMES.

PROJECT NO. 06847-42-01

TRENCH T 22

ELEV. (MSL.) **486** DATE COMPLETED **8/26/02**

EQUIPMENT **JD 510 RUBBER TIRE**

DEPTH IN FEET	SAMPLE NO.	LITHOLOGY	GROUNDWATER	SOIL CLASS (USCS)	MATERIAL DESCRIPTION	PENETRATION RESISTANCE (BLOWS/FT.)	DRY DENSITY (P.C.F.)	MOISTURE CONTENT (%)
0		▨		CH	**TERRACE DEPOSIT CLAY** Hard, dry, moderate yellowish brown, CLAY, cracked roots			
2		▨		CH	Hard, moist, moderate yellowish brown, CLAY			
4		⁘		SM	Dense, damp, moderate and light brown, Silty, fine to coarse SAND with rounded gravel, approximately 30% cobbles and boulders up to 1 foot diameter			
6					TRENCH TERMINATED AT 6 FEET			

Figure A-40, Log of Trench T 22

SOM

SAMPLE SYMBOLS
☐ ... SAMPLING UNSUCCESSFUL
◧ ... STANDARD PENETRATION TEST
■ ... DRIVE SAMPLE (UNDISTURBED)
▩ ... DISTURBED OR BAG SAMPLE
◪ ... CHUNK SAMPLE
▼ ... WATER TABLE OR SEEPAGE

NOTE: THE LOG OF SUBSURFACE CONDITIONS SHOWN HEREON APPLIES ONLY AT THE SPECIFIC BORING OR TRENCH LOCATION AND AT THE DATE INDICATED. IT IS NOT WARRANTED TO BE REPRESENTATIVE OF SUBSURFACE CONDITIONS AT OTHER LOCATIONS AND TIMES.

PROJECT NO. 06847-42-01

TRENCH T 23

ELEV. (MSL.) **468** DATE COMPLETED **8/26/02**

EQUIPMENT **JD 510 RUBBER TIRE**

DEPTH IN FEET	SAMPLE NO.	LITHOLOGY	GROUNDWATER	SOIL CLASS (USCS)	MATERIAL DESCRIPTION	PENETRATION RESISTANCE (BLOWS/FT.)	DRY DENSITY (P.C.F.)	MOISTURE CONTENT (%)
0								
				CH	**TERRACE DEPOSIT CLAY** Hard, moist, moderate yellowish brown, CLAY, cracked roots			
2	T23-1 ▨			CH	Firm, moist, moderate yellowish brown, CLAY			
4				CH	Firm, moist, moderate yellow brown, Sandy CLAY			
6	T23-2 ▨			SC	**TERRACE DEPOSIT GRAVEL** Becomes dense, moist, moderate yellowish brown and dark yellowish orange, Clayey SAND with gravel, approximately 25% cobbles and boulders up to 2 feet diameter			
8								
					TRENCH TERMINATED AT 9 FEET			

Figure A-41, Log of Trench T 23

SOM

SAMPLE SYMBOLS

☐ ... SAMPLING UNSUCCESSFUL
◧ ... STANDARD PENETRATION TEST
■ ... DRIVE SAMPLE (UNDISTURBED)
▨ ... DISTURBED OR BAG SAMPLE
◩ ... CHUNK SAMPLE
▼ ... WATER TABLE OR SEEPAGE

NOTE: THE LOG OF SUBSURFACE CONDITIONS SHOWN HEREON APPLIES ONLY AT THE SPECIFIC BORING OR TRENCH LOCATION AND AT THE DATE INDICATED. IT IS NOT WARRANTED TO BE REPRESENTATIVE OF SUBSURFACE CONDITIONS AT OTHER LOCATIONS AND TIMES.

PROJECT NO. 06847-42-01

TRENCH T 24

ELEV. (MSL.) **485** DATE COMPLETED **8/26/02**

EQUIPMENT **JD 510 RUBBER TIRE**

DEPTH IN FEET	SAMPLE NO.	LITHOLOGY	GROUNDWATER	SOIL CLASS (USCS)	MATERIAL DESCRIPTION	PENETRATION RESISTANCE (BLOWS/FT.)	DRY DENSITY (P.C.F.)	MOISTURE CONTENT (%)
0				CH	**TERRACE DEPOSIT CLAY** Hard, dry, moderate yellowish brown, CLAY, cracked roots; topsoil zone			
2				CH	Firm, moist, moderate yellowish brown, CLAY			
4 6 8 10	T24-1 ▨			SM	**TERRACE DEPOSIT GRAVEL** Dense, moist, dark yellowish orange to moderate yellowish brown, Silty fine SAND, scattered gravel and cobbles, rounded, less than 6 inches diameter			
12	T24-2 ▨			SM	Becomes moderate yellowish brown			
14	T24-3 ▨			SW	Becomes dense, moist, moderate yellowish brown, well graded SAND with rounded fine gravel, approximately 20% rounded cobbles less than 1 foot diameter, caving			
16					TRENCH TERMINATED AT 16 FEET			

Figure A-42, Log of Trench T 24

SDM

SAMPLE SYMBOLS

☐ ... SAMPLING UNSUCCESSFUL

◧ ... STANDARD PENETRATION TEST

■ ... DRIVE SAMPLE (UNDISTURBED)

▨ ... DISTURBED OR BAG SAMPLE

◪ ... CHUNK SAMPLE

▼ ... WATER TABLE OR SEEPAGE

NOTE: THE LOG OF SUBSURFACE CONDITIONS SHOWN HEREON APPLIES ONLY AT THE SPECIFIC BORING OR TRENCH LOCATION AND AT THE DATE INDICATED. IT IS NOT WARRANTED TO BE REPRESENTATIVE OF SUBSURFACE CONDITIONS AT OTHER LOCATIONS AND TIMES.

PROJECT NO. 06847-42-01

TRENCH T 25

ELEV. (MSL.) 484 DATE COMPLETED 8/26/02

EQUIPMENT JD 510 RUBBER TIRE

DEPTH IN FEET	SAMPLE NO.	LITHOLOGY	GROUNDWATER	SOIL CLASS (USCS)	MATERIAL DESCRIPTION	PENETRATION RESISTANCE (BLOWS/FT.)	DRY DENSITY (P.C.F.)	MOISTURE CONTENT (%)
0				CH	**TERRACE DEPOSIT CLAY** Hard, dry, dark yellowish brown, CLAY, cracks, roots			
2				CH	Hard, moist, dark yellowish brown, CLAY			
4				SC	**TERRACE DEPOSIT GRAVEL** Dense, moist, moderate brown, Clayey SAND with rounded gravel, approximately 20% cobbles and boulders up to 1 foot diameter			
6	T25-1			SC	No cobbles or boulders below 4.5 feet			
8					TRENCH TERMINATED AT 8 FEET			

Figure A-43, Log of Trench T 25

SDM

SAMPLE SYMBOLS
☐ ... SAMPLING UNSUCCESSFUL ◧ ... STANDARD PENETRATION TEST ■ ... DRIVE SAMPLE (UNDISTURBED)
▨ ... DISTURBED OR BAG SAMPLE ◩ ... CHUNK SAMPLE ▼ ... WATER TABLE OR SEEPAGE

NOTE: THE LOG OF SUBSURFACE CONDITIONS SHOWN HEREON APPLIES ONLY AT THE SPECIFIC BORING OR TRENCH LOCATION AND AT THE DATE INDICATED. IT IS NOT WARRANTED TO BE REPRESENTATIVE OF SUBSURFACE CONDITIONS AT OTHER LOCATIONS AND TIMES.

PROJECT NO. 06847-42-01

TRENCH T 26

ELEV. (MSL.) **478** DATE COMPLETED **8/26/02**

EQUIPMENT **JD 510 RUBBER TIRE**

DEPTH IN FEET	SAMPLE NO.	LITHOLOGY	GROUNDWATER	SOIL CLASS (USCS)	MATERIAL DESCRIPTION	PENETRATION RESISTANCE (BLOWS/FT.)	DRY DENSITY (P.C.F.)	MOISTURE CONTENT (%)
0		▨		CH	**TERRACE DEPOSIT CLAY** Hard, dry, dark yellowish brown, CLAY, caliche, rootlets; topsoil zone			
2 4		▨		CH	Firm to hard, moist, pale yellowish brown, CLAY			
6 8		▨		SC	**TERRACE DEPOSIT GRAVEL** Dense, moist, moderate brown, Clayey SAND with gravel, approximately 10% rounded cobbles and boulders up to 2 feet diameter			
					TRENCH TERMINATED AT 9 FEET			

Figure A-44, Log of Trench T 26

SOM

SAMPLE SYMBOLS	☐ ... SAMPLING UNSUCCESSFUL	◧ ... STANDARD PENETRATION TEST	■ ... DRIVE SAMPLE (UNDISTURBED)
	▩ ... DISTURBED OR BAG SAMPLE	◪ ... CHUNK SAMPLE	▼ ... WATER TABLE OR SEEPAGE

NOTE: THE LOG OF SUBSURFACE CONDITIONS SHOWN HEREON APPLIES ONLY AT THE SPECIFIC BORING OR TRENCH LOCATION AND AT THE DATE INDICATED. IT IS NOT WARRANTED TO BE REPRESENTATIVE OF SUBSURFACE CONDITIONS AT OTHER LOCATIONS AND TIMES.

PROJECT NO. 06847-42-01

TRENCH T 27

ELEV. (MSL.) **489** DATE COMPLETED **8/26/02**

EQUIPMENT **JD 510 RUBBER TIRE**

DEPTH IN FEET	SAMPLE NO.	LITHOLOGY	GROUNDWATER	SOIL CLASS (USCS)	MATERIAL DESCRIPTION	PENETRATION RESISTANCE (BLOWS/FT.)	DRY DENSITY (P.C.F.)	MOISTURE CONTENT (%)
0		▨		CH	**TERRACE DEPOSIT CLAY** Hard, dry, dark yellowish brown, CLAY, caliche, roots; topsoil zone			
2 4		▨		CH	Firm to hard, moist, pale yellowish brown, CLAY			
6 8		▨		SC	**TERRACE DEPOSIT GRAVEL** Dense, moist, moderate yellowish brown, Clayey SAND with gravel, approximately 10% rounded cobbles and boulders up to 1 foot diameter			
					TRENCH TERMINATED AT 9 FEET			

Figure A-45, Log of Trench T 27

SOM

SAMPLE SYMBOLS			
	☐ ... SAMPLING UNSUCCESSFUL	◧ ... STANDARD PENETRATION TEST	■ ... DRIVE SAMPLE (UNDISTURBED)
	▩ ... DISTURBED OR BAG SAMPLE	◣ ... CHUNK SAMPLE	▼ ... WATER TABLE OR SEEPAGE

NOTE: THE LOG OF SUBSURFACE CONDITIONS SHOWN HEREON APPLIES ONLY AT THE SPECIFIC BORING OR TRENCH LOCATION AND AT THE DATE INDICATED. IT IS NOT WARRANTED TO BE REPRESENTATIVE OF SUBSURFACE CONDITIONS AT OTHER LOCATIONS AND TIMES.

PROJECT NO. 06847-42-01

TRENCH T 28

ELEV. (MSL.) 487 DATE COMPLETED 8/26/02

EQUIPMENT JD 510 RUBBER TIRE

DEPTH IN FEET	SAMPLE NO.	LITHOLOGY	GROUNDWATER	SOIL CLASS (USCS)	MATERIAL DESCRIPTION	PENETRATION RESISTANCE (BLOWS/FT.)	DRY DENSITY (P.C.F.)	MOISTURE CONTENT (%)
0				CH	**TERRACE DEPOSIT CLAY** Hard, dry, dark yellowish brown, CLAY, caliche, rootlets; topsoil zone			
2 4 6				CH	Firm to hard, moist, pale yellowish brown, CLAY, gravelly in upper 3 feet			
8 10				SC	**TERRACE DEPOSIT GRAVEL** Dense, moist, moderate yellowish brown, Clayey SAND with coarse gravel, approximately 10% rounded cobbles and boulders up to 1 foot diameter			
					TRENCH TERMINATED AT 11 FEET			

Figure A-46, Log of Trench T 28

SOM

SAMPLE SYMBOLS	☐ ... SAMPLING UNSUCCESSFUL	◧ ... STANDARD PENETRATION TEST	■ ... DRIVE SAMPLE (UNDISTURBED)
	▨ ... DISTURBED OR BAG SAMPLE	◩ ... CHUNK SAMPLE	▼ ... WATER TABLE OR SEEPAGE

NOTE: THE LOG OF SUBSURFACE CONDITIONS SHOWN HEREON APPLIES ONLY AT THE SPECIFIC BORING OR TRENCH LOCATION AND AT THE DATE INDICATED. IT IS NOT WARRANTED TO BE REPRESENTATIVE OF SUBSURFACE CONDITIONS AT OTHER LOCATIONS AND TIMES.

PROJECT NO. 06847-42-01

TRENCH T 29

ELEV. (MSL.) 465 DATE COMPLETED 8/26/02

EQUIPMENT JD 510 RUBBER TIRE

DEPTH IN FEET	SAMPLE NO.	LITHOLOGY	GROUNDWATER	SOIL CLASS (USCS)	MATERIAL DESCRIPTION	PENETRATION RESISTANCE (BLOWS/FT.)	DRY DENSITY (P.C.F.)	MOISTURE CONTENT (%)
0				CH	**TOPSOIL** Hard, dry, dark yellowish brown, CLAY with gravel, cracking, roots			
2				SC-GC	**TERRACE DEPOSIT GRAVEL** Dense, moist, dusky yellow and moderate yellowish brown, Clayey, very Gravelly SAND, approximately 30% rounded cobbles and boulders up to 2.5 feet diameter			
12	T29-1 ◣			SM	**SAN DIEGO FORMATION** Dense, damp, dusky yellow to light olive brown, Silty fine SAND			
14					TRENCH TERMINATED AT 14 FEET			

Figure A-47, Log of Trench T 29

SOM

SAMPLE SYMBOLS

☐ ... SAMPLING UNSUCCESSFUL ◧ ... STANDARD PENETRATION TEST ■ ... DRIVE SAMPLE (UNDISTURBED)

▨ ... DISTURBED OR BAG SAMPLE ◣ ... CHUNK SAMPLE ▼ ... WATER TABLE OR SEEPAGE

NOTE: THE LOG OF SUBSURFACE CONDITIONS SHOWN HEREON APPLIES ONLY AT THE SPECIFIC BORING OR TRENCH LOCATION AND AT THE DATE INDICATED. IT IS NOT WARRANTED TO BE REPRESENTATIVE OF SUBSURFACE CONDITIONS AT OTHER LOCATIONS AND TIMES.

APPENDIX B

APPENDIX B

LABORATORY TESTING

Laboratory tests were performed in accordance with generally accepted test methods of the American Society for Testing and Materials (ASTM) or other suggested procedures. Selected samples were tested for their in-place dry density and moisture content, direct shear strength, compaction, expansion, and soluble sulfate characteristics. The results of the tests are summarized in tabular and graphical form herewith. The in-place dry density and moisture content of the samples tested are presented on the Boring logs in Appendix A.

TABLE B-I
SUMMARY OF LABORATORY MAXIMUM DRY DENSITY AND OPTIMUM MOISTURE CONTENT TEST RESULTS
ASTM D 1557

Sample No.	Description	Maximum Dry Density (pcf)	Optimum Moisture Content (% dry wt.)
LB1-2	Yellowish brown, sandy Gravel with little clay	136.1	6.2
LB1-5	Dark olive-brown, silty, vine SAND with trace rock	114.9	14.4
LB3-3	Gray-brown, fine sandy Clay	104.6	18.0
T5-2	Light yellow-brown, silty Clay	109.0	17.5

TABLE B-II
SUMMARY OF DIRECT SHEAR TEST RESULTS

Sample No.	Dry Density (pcf)	Moisture Content (%)	Unit Cohesion (psf)	Angle of Shear Resistance (degrees)
LB3-3	93.4	19.0	500	32

Sample remolded to approximately 90 percent of maximum laboratory dry density at near optimum moisture content.

TABLE B-III
SUMMARY OF LABORATORY EXPANSION INDEX TEST RESULTS

Sample No.	Moisture Content		Dry Density (pcf)	Expansion Index
	Before Test (%)	After Test (%)		
LB1-2	8.1	18.0	120.8	3
T1-1	13.3	30.0	101.1	98
T1-2	7.8	22.7	120.6	0
T10-2	18.0	39.1	87.4	91
T10-3	10.1	22.6	110.5	19
T18-1	13.3	30.7	102.2	120
T18-2	11.0	22.7	109.3	9
T1-mix	9.9	22.1	115.3	28
T10-mix	13.7	30.4	100.2	87
T18-mix	11.7	25.1	107.4	80

TABLE B-IV
SUMMARY OF LABORATORY SOLUBLE SULFATE TEST RESULTS

Sample No.	Sulfate (% SO_4)	Sulfate Exposure*
T1-1	.027	Negligible
T1-2	.013	Negligible
T10-2	.162	Moderate
T10-3	.036	Negligible
T18-1	.260	Severe
T18-2	.038	Negligible

*Reference: 1997 Uniform Building Code Table 19-A-3.

APPENDIX C

APPENDIX C

RECOMMENDED GRADING SPECIFICATIONS

FOR

SOUTH OTAY MESA PROPERTY
SAN DIEGO, CALIFORNIA

PROJECT NO. 06847-42-01

RECOMMENDED GRADING SPECIFICATIONS

1. GENERAL

1.1. These Recommended Grading Specifications shall be used in conjunction with the Geotechnical Report for the project prepared by Geocon Incorporated. The recommendations contained in the text of the Geotechnical Report are a part of the earthwork and grading specifications and shall supersede the provisions contained hereinafter in the case of conflict.

1.2. Prior to the commencement of grading, a geotechnical consultant (Consultant) shall be employed for the purpose of observing earthwork procedures and testing the fills for substantial conformance with the recommendations of the Geotechnical Report and these specifications. It will be necessary that the Consultant provide adequate testing and observation services so that he may determine that, in his opinion, the work was performed in substantial conformance with these specifications. It shall be the responsibility of the Contractor to assist the Consultant and keep him apprised of work schedules and changes so that personnel may be scheduled accordingly.

1.3. It shall be the sole responsibility of the Contractor to provide adequate equipment and methods to accomplish the work in accordance with applicable grading codes or agency ordinances, these specifications and the approved grading plans. If, in the opinion of the Consultant, unsatisfactory conditions such as questionable soil materials, poor moisture condition, inadequate compaction, adverse weather, and so forth, result in a quality of work not in conformance with these specifications, the Consultant will be empowered to reject the work and recommend to the Owner that construction be stopped until the unacceptable conditions are corrected.

2. DEFINITIONS

2.1. **Owner** shall refer to the owner of the property or the entity on whose behalf the grading work is being performed and who has contracted with the Contractor to have grading performed.

2.2. **Contractor** shall refer to the Contractor performing the site grading work.

2.3. **Civil Engineer** or **Engineer of Work** shall refer to the California licensed Civil Engineer or consulting firm responsible for preparation of the grading plans, surveying and verifying as-graded topography.

2.4. **Consultant** shall refer to the soil engineering and engineering geology consulting firm retained to provide geotechnical services for the project.

2.5. **Soil Engineer** shall refer to a California licensed Civil Engineer retained by the Owner, who is experienced in the practice of geotechnical engineering. The Soil Engineer shall be responsible for having qualified representatives on-site to observe and test the Contractor's work for conformance with these specifications.

2.6. **Engineering Geologist** shall refer to a California licensed Engineering Geologist retained by the Owner to provide geologic observations and recommendations during the site grading.

2.7. **Geotechnical Report** shall refer to a soil report (including all addenda) which may include a geologic reconnaissance or geologic investigation that was prepared specifically for the development of the project for which these Recommended Grading Specifications are intended to apply.

3. MATERIALS

3.1. Materials for compacted fill shall consist of any soil excavated from the cut areas or imported to the site that, in the opinion of the Consultant, is suitable for use in construction of fills. In general, fill materials can be classified as *soil* fills, *soil-rock* fills or *rock* fills, as defined below.

3.1.1. **Soil fills** are defined as fills containing no rocks or hard lumps greater than 12 inches in maximum dimension and containing at least 40 percent by weight of material smaller than 3/4 inch in size.

3.1.2. **Soil-rock fills** are defined as fills containing no rocks or hard lumps larger than 4 feet in maximum dimension and containing a sufficient matrix of soil fill to allow for proper compaction of soil fill around the rock fragments or hard lumps as specified in Paragraph 6.2. **Oversize rock** is defined as material greater than 12 inches.

3.1.3. **Rock fills** are defined as fills containing no rocks or hard lumps larger than 3 feet in maximum dimension and containing little or no fines. Fines are defined as material smaller than 3/4 inch in maximum dimension. The quantity of fines shall be less than approximately 20 percent of the rock fill quantity.

3.2. Material of a perishable, spongy, or otherwise unsuitable nature as determined by the Consultant shall not be used in fills.

3.3. Materials used for fill, either imported or on-site, shall not contain hazardous materials as defined by the California Code of Regulations, Title 22, Division 4, Chapter 30, Articles 9 and 10; 40CFR; and any other applicable local, state or federal laws. The Consultant shall not be responsible for the identification or analysis of the potential presence of hazardous materials. However, if observations, odors or soil discoloration cause Consultant to suspect the presence of hazardous materials, the Consultant may request from the Owner the termination of grading operations within the affected area. Prior to resuming grading operations, the Owner shall provide a written report to the Consultant indicating that the suspected materials are not hazardous as defined by applicable laws and regulations.

3.4. The outer 15 feet of *soil-rock* fill slopes, measured horizontally, should be composed of properly compacted *soil* fill materials approved by the Consultant. *Rock* fill may extend to the slope face, provided that the slope is not steeper than 2:1 (horizontal:vertical) and a soil layer no thicker than 12 inches is track-walked onto the face for landscaping purposes. This procedure may be utilized, provided it is acceptable to the governing agency, Owner and Consultant.

3.5. Representative samples of soil materials to be used for fill shall be tested in the laboratory by the Consultant to determine the maximum density, optimum moisture content, and, where appropriate, shear strength, expansion, and gradation characteristics of the soil.

3.6. During grading, soil or groundwater conditions other than those identified in the Geotechnical Report may be encountered by the Contractor. The Consultant shall be notified immediately to evaluate the significance of the unanticipated condition

4. CLEARING AND PREPARING AREAS TO BE FILLED

4.1. Areas to be excavated and filled shall be cleared and grubbed. Clearing shall consist of complete removal above the ground surface of trees, stumps, brush, vegetation, man-made structures and similar debris. Grubbing shall consist of removal of stumps, roots, buried logs and other unsuitable material and shall be performed in areas to be graded. Roots and other projections exceeding 1-1/2 inches in diameter shall be removed to a depth of 3 feet below the surface of the ground. Borrow areas shall be grubbed to the extent necessary to provide suitable fill materials.

4.2. Any asphalt pavement material removed during clearing operations should be properly disposed at an approved off-site facility. Concrete fragments which are free of reinforcing steel may be placed in fills, provided they are placed in accordance with Section 6.2 or 6.3 of this document.

4.3. After clearing and grubbing of organic matter or other unsuitable material, loose or porous soils shall be removed to the depth recommended in the Geotechnical Report. The depth of removal and compaction shall be observed and approved by a representative of the Consultant. The exposed surface shall then be plowed or scarified to a minimum depth of 6 inches and until the surface is free from uneven features that would tend to prevent uniform compaction by the equipment to be used.

4.4. Where the slope ratio of the original ground is steeper than 6:1 (horizontal:vertical), or where recommended by the Consultant, the original ground should be benched in accordance with the following illustration.

TYPICAL BENCHING DETAIL

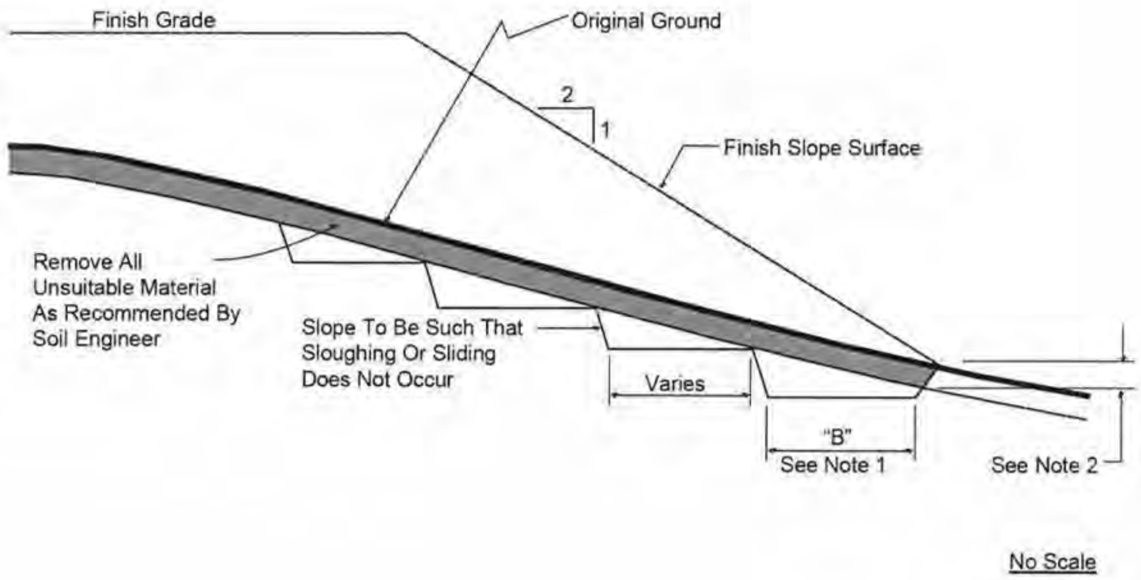

DETAIL NOTES:

(1) Key width "B" should be a minimum of 10 feet wide, or sufficiently wide to permit complete coverage with the compaction equipment used. The base of the key should be graded horizontal, or inclined slightly into the natural slope.

(2) The outside of the bottom key should be below the topsoil or unsuitable surficial material and at least 2 feet into dense formational material. Where hard rock is exposed in the bottom of the key, the depth and configuration of the key may be modified as approved by the Consultant.

4.5. After areas to receive fill have been cleared, plowed or scarified, the surface should be disced or bladed by the Contractor until it is uniform and free from large clods. The area should then be moisture conditioned to achieve the proper moisture content, and compacted as recommended in Section 6.0 of these specifications.

5. COMPACTION EQUIPMENT

5.1. Compaction of *soil* or *soil-rock* fill shall be accomplished by sheepsfoot or segmented-steel wheeled rollers, vibratory rollers, multiple-wheel pneumatic-tired rollers, or other types of acceptable compaction equipment. Equipment shall be of such a design that it will be capable of compacting the *soil* or *soil-rock* fill to the specified relative compaction at the specified moisture content.

5.2. Compaction of *rock* fills shall be performed in accordance with Section 6.3.

6. PLACING, SPREADING AND COMPACTION OF FILL MATERIAL

6.1. *Soil* fill, as defined in Paragraph 3.1.1, shall be placed by the Contractor in accordance with the following recommendations;

6.1.1. *Soil* fill shall be placed by the Contractor in layers that, when compacted, should generally not exceed 8 inches. Each layer shall be spread evenly and shall be thoroughly mixed during spreading to obtain uniformity of material and moisture in each layer. The entire fill shall be constructed as a unit in nearly level lifts. Rock materials greater than 12 inches in maximum dimension shall be placed in accordance with Section 6.2 or 6.3 of these specifications.

6.1.2. In general, the *soil* fill shall be compacted at a moisture content at or above the optimum moisture content as determined by ASTM D1557-00.

6.1.3. When the moisture content of *soil* fill is below that specified by the Consultant, water shall be added by the Contractor until the moisture content is in the range specified.

6.1.4. When the moisture content of the *soil* fill is above the range specified by the Consultant or too wet to achieve proper compaction, the *soil* fill shall be aerated by the Contractor by blading/mixing, or other satisfactory methods until the moisture content is within the range specified.

6.1.5. After each layer has been placed, mixed, and spread evenly, it shall be thoroughly compacted by the Contractor to a relative compaction of at least 90 percent. Relative compaction is defined as the ratio (expressed in percent) of the in-place dry density of the compacted fill to the maximum laboratory dry density as determined in accordance with ASTM D1557-00. Compaction shall be continuous over the entire area, and compaction equipment shall make sufficient passes so that the specified minimum relative compaction has been achieved throughout the entire fill.

6.1.6. Soils having an Expansion Index of greater than 50 may be used in fills if placed at least 3 feet below finish pad grade and should be compacted at a moisture content generally 2 to 4 percent greater than the optimum moisture content for the material.

6.1.7. Properly compacted *soil* fill shall extend to the design surface of fill slopes. To achieve proper compaction, it is recommended that fill slopes be over-built by at least 3 feet and then cut to the design grade. This procedure is considered preferable to track-walking of slopes, as described in the following paragraph.

6.1.8. As an alternative to over-building of slopes, slope faces may be back-rolled with a heavy-duty loaded sheepsfoot or vibratory roller at maximum 4-foot fill height intervals. Upon completion, slopes should then be track-walked with a D-8 dozer or similar equipment, such that a dozer track covers all slope surfaces at least twice.

6.2. *Soil-rock* fill, as defined in Paragraph 3.1.2, shall be placed by the Contractor in accordance with the following recommendations:

6.2.1. Rocks larger than 12 inches but less than 4 feet in maximum dimension may be incorporated into the compacted *soil* fill, but shall be limited to the area measured 15 feet minimum horizontally from the slope face and 5 feet below finish grade or 3 feet below the deepest utility, whichever is deeper.

6.2.2. Rocks or rock fragments up to 4 feet in maximum dimension may either be individually placed or placed in windrows. Under certain conditions, rocks or rock fragments up to 10 feet in maximum dimension may be placed using similar methods. The acceptability of placing rock materials greater than 4 feet in maximum dimension shall be evaluated during grading as specific cases arise and shall be approved by the Consultant prior to placement.

6.2.3. For individual placement, sufficient space shall be provided between rocks to allow for passage of compaction equipment.

6.2.4. For windrow placement, the rocks should be placed in trenches excavated in properly compacted *soil* fill. Trenches should be approximately 5 feet wide and 4 feet deep in maximum dimension. The voids around and beneath rocks should be filled with approved granular soil having a Sand Equivalent of 30 or greater and should be compacted by flooding. Windrows may also be placed utilizing an "open-face" method in lieu of the trench procedure, however, this method should first be approved by the Consultant.

6.2.5. Windrows should generally be parallel to each other and may be placed either parallel to or perpendicular to the face of the slope depending on the site geometry. The minimum horizontal spacing for windrows shall be 12 feet center-to-center with a 5-foot stagger or offset from lower courses to next overlying course. The minimum vertical spacing between windrow courses shall be 2 feet from the top of a lower windrow to the bottom of the next higher windrow.

6.2.6. All rock placement, fill placement and flooding of approved granular soil in the windrows must be continuously observed by the Consultant or his representative.

6.3. *Rock* fills, as defined in Section 3.1.3., shall be placed by the Contractor in accordance with the following recommendations:

6.3.1. The base of the *rock* fill shall be placed on a sloping surface (minimum slope of 2 percent, maximum slope of 5 percent). The surface shall slope toward suitable subdrainage outlet facilities. The *rock* fills shall be provided with subdrains during construction so that a hydrostatic pressure buildup does not develop. The subdrains shall be permanently connected to controlled drainage facilities to control post--construction infiltration of water.

6.3.2. *Rock* fills shall be placed in lifts not exceeding 3 feet. Placement shall be by rock trucks traversing previously placed lifts and dumping at the edge of the currently placed lift. Spreading of the *rock* fill shall be by dozer to facilitate *seating* of the rock. The *rock* fill shall be watered heavily during placement. Watering shall consist of water trucks traversing in front of the current rock lift face and spraying water continuously during rock placement. Compaction equipment with compactive energy comparable to or greater than that of a 20-ton steel vibratory roller or other compaction equipment providing suitable energy to achieve the required compaction or deflection as recommended in Paragraph 6.3.3 shall be utilized. The number of passes to be made will be determined as described in Paragraph 6.3.3. Once a *rock* fill lift has been covered with *soil* fill, no additional *rock* fill lifts will be permitted over the *soil* fill.

6.3.3. Plate bearing tests, in accordance with ASTM D1196-93, may be performed in both the compacted *soil* fill and in the *rock* fill to aid in determining the number of passes of the compaction equipment to be performed. If performed, a minimum of three plate bearing tests shall be performed in the properly compacted *soil* fill (minimum relative compaction of 90 percent). Plate bearing tests shall then be performed on areas of *rock* fill having two passes, four passes and six passes of the compaction equipment, respectively. The number of passes required for the *rock* fill shall be determined by comparing the results of the plate bearing tests for the *soil* fill and the *rock* fill and by evaluating the deflection variation with number of passes. The required number of passes of the compaction equipment will be performed as necessary until the plate bearing deflections are equal to or less than that determined for the properly compacted *soil* fill. In no case will the required number of passes be less than two.

6.3.4. A representative of the Consultant shall be present during *rock* fill operations to verify that the minimum number of "passes" have been obtained, that water is being properly applied and that specified procedures are being followed. The actual number of plate bearing tests will be determined by the Consultant during grading. In general, at least one test should be performed for each approximately 5,000 to 10,000 cubic yards of *rock* fill placed.

6.3.5. Test pits shall be excavated by the Contractor so that the Consultant can state that, in his opinion, sufficient water is present and that voids between large rocks are properly filled with smaller rock material. In-place density testing will not be required in the *rock* fills.

6.3.6. To reduce the potential for "piping" of fines into the *rock* fill from overlying *soil* fill material, a 2-foot layer of graded filter material shall be placed above the uppermost lift of *rock* fill. The need to place graded filter material below the *rock* should be determined by the Consultant prior to commencing grading. The gradation of the graded filter material will be determined at the time the *rock* fill is being excavated. Materials typical of the *rock* fill should be submitted to the Consultant in a timely manner, to allow design of the graded filter prior to the commencement of *rock* fill placement.

6.3.7. All *rock* fill placement shall be continuously observed during placement by representatives of the Consultant.

7. OBSERVATION AND TESTING

7.1. The Consultant shall be the Owners representative to observe and perform tests during clearing, grubbing, filling and compaction operations. In general, no more than 2 feet in vertical elevation of *soil* or *soil-rock* fill shall be placed without at least one field density test being performed within that interval. In addition, a minimum of one field density test shall be performed for every 2,000 cubic yards of *soil* or *soil-rock* fill placed and compacted.

7.2. The Consultant shall perform random field density tests of the compacted *soil* or *soil-rock* fill to provide a basis for expressing an opinion as to whether the fill material is compacted as specified. Density tests shall be performed in the compacted materials below any disturbed surface. When these tests indicate that the density of any layer of fill or portion thereof is below that specified, the particular layer or areas represented by the test shall be reworked until the specified density has been achieved.

7.3. During placement of *rock* fill, the Consultant shall verify that the minimum number of passes have been obtained per the criteria discussed in Section 6.3.3. The Consultant shall request the excavation of observation pits and may perform plate bearing tests on the placed *rock* fills. The observation pits will be excavated to provide a basis for expressing an opinion as to whether the *rock* fill is properly seated and sufficient moisture has been applied to the material. If performed, plate bearing tests will be performed randomly on the surface of the most-recently placed lift. Plate bearing tests will be performed to provide a basis for expressing an opinion as to whether the *rock* fill is adequately seated. The maximum deflection in the *rock* fill determined in Section 6.3.3 shall be less than the maximum deflection of the properly compacted *soil* fill. When any of the above criteria indicate that a layer of *rock* fill or any portion thereof is below that specified, the affected layer or area shall be reworked until the *rock* fill has been adequately seated and sufficient moisture applied.

7.4. A settlement monitoring program designed by the Consultant may be conducted in areas of *rock* fill placement. The specific design of the monitoring program shall be as recommended in the Conclusions and Recommendations section of the project Geotechnical Report or in the final report of testing and observation services performed during grading.

7.5. The Consultant shall observe the placement of subdrains, to verify that the drainage devices have been placed and constructed in substantial conformance with project specifications.

7.6. Testing procedures shall conform to the following Standards as appropriate:

7.6.1. Soil and Soil-Rock Fills:

7.6.1.1. Field Density Test, ASTM D1556-00, *Density of Soil In-Place By the Sand-Cone Method.*

7.6.1.2. Field Density Test, Nuclear Method, ASTM D2922-96, *Density of Soil and Soil-Aggregate In-Place by Nuclear Methods (Shallow Depth).*

7.6.1.3. Laboratory Compaction Test, ASTM D1557-00, *Moisture-Density Relations of Soils and Soil-Aggregate Mixtures Using 10-Pound Hammer and 18-Inch Drop.*

7.6.1.4. Expansion Index Test, ASTM D4829-95, *Expansion Index Test.*

7.6.2. Rock Fills

7.6.2.1. Field Plate Bearing Test, ASTM D1196-93 (Reapproved 1997) *Standard Method for Nonreparative Static Plate Load Tests of Soils and Flexible Pavement Components, For Use in Evaluation and Design of Airport and Highway Pavements.*

8. PROTECTION OF WORK

8.1. During construction, the Contractor shall properly grade all excavated surfaces to provide positive drainage and prevent ponding of water. Drainage of surface water shall be controlled to avoid damage to adjoining properties or to finished work on the site. The Contractor shall take remedial measures to prevent erosion of freshly graded areas until such time as permanent drainage and erosion control features have been installed. Areas subjected to erosion or sedimentation shall be properly prepared in accordance with the Specifications prior to placing additional fill or structures.

8.2. After completion of grading as observed and tested by the Consultant, no further excavation or filling shall be conducted except in conjunction with the services of the Consultant.

9. CERTIFICATIONS AND FINAL REPORTS

9.1. Upon completion of the work, Contractor shall furnish Owner a certification by the Civil Engineer stating that the lots and/or building pads are graded to within 0.1 foot vertically of elevations shown on the grading plan and that all tops and toes of slopes are within 0.5 foot horizontally of the positions shown on the grading plans. After installation of a section of subdrain, the project Civil Engineer should survey its location and prepare an *as-built* plan of the subdrain location. The project Civil Engineer should verify the proper outlet for the subdrains and the Contractor should ensure that the drain system is free of obstructions.

9.2. The Owner is responsible for furnishing a final as-graded soil and geologic report satisfactory to the appropriate governing or accepting agencies. The as-graded report should be prepared and signed by a California licensed Civil Engineer experienced in geotechnical engineering and by a California Certified Engineering Geologist, indicating that the geotechnical aspects of the grading were performed in substantial conformance with the Specifications or approved changes to the Specifications.

LIST OF REFERENCES

1. Abbott, P. L. and J. A. May, *Eocene Geologic History San Diego Region,* SEPM, Pacific Section, 1991.

2. Anderson, J. G., *Synthesis of Seismicity and Geologic Data in California,* U.S. Geologic Survey Open-File Report, 84-424, 1984, pp. 1-186.

3. Blake, T. F. *EQFAULT, A Computer Program for the Deterministic Prediction of Peak Horizontal Acceleration from Digitized California Faults,* User's Manual, 1989a, p. 79.

5. *City of San Diego Seismic Safety Study, Geologic Hazards and Faults*, 1995 Edition.

6. California Geological Survey, formerly Division of Mines and Geology, *Landslide Hazards in the Southern Part of the San Diego County Metropolitan Area, San Diego County, California,* DMG Open-File Report 95-03, 1995.

7. ------, *Probabilistic Seismic Hazard Assessment for the State of California,* DMG Open-File Report, 96-08, 1996.

8. Jennings, C. W., *Fault Activity Map of California and Adjacent Areas,* California Geologic Survey, formerly Division of Mines and Geology, 1975 (revised 1987).

9. Kennedy, M. P., *Geology of the San Diego Metropolitan Area, California,* Bulletin 200, California Geological Survey, formerly Division of Mines and Geology, 1975.

11. San Diego Association of Geologists, *Geology of Southwestern San Diego County, California and Northwestern Baja California,* edited by Gregory T. Ferrand, 1976.

12. Unpublished reports, aerial photographs, and maps on file with Geocon Incorporated.

13. Wesnousky, S. G., *Earthquakes, Quaternary Faults, and Seismic Hazard in California,* Journal of Geophysical Research, Vol. 91, No. B12, 1986, pp. 12, 587, 631.