Appendix J:
Transportation Supporting Informatin

THIS PAGE INTENTIONALLY LEFT BLANK

MEMORANDUM

URBAN | CROSSROADS

DATE: August 6, 2024
TO: Cecilia So, First Carbon Solutions
FROM: Alex So, Urban Crossroads, Inc.
JOB NO: 15858-01 VMT

HIGHLAND GROVE TTM NO. 38910 VEHICLE MILES TRAVELED (VMT) ASSESSMENT

Urban Crossroads, Inc. has completed the following Vehicle Miles Traveled (VMT) Assessment for the Highland Grove TTM No. 38910 (**Project**), located immediately north of El Sobrante Road, east of McAllister Street, and south of Travertine Drive in the County of Riverside.

PROJECT OVERVIEW

The Project consists of the development of 128 single-family detached residential dwelling units and associated improvements. A preliminary site plan can be found in Attachment A.

BACKGROUND

The California Environmental Quality Act (CEQA) requires all lead agencies to adopt VMT as the measure for identifying transportation impacts for land use projects. The VMT analysis presented in this report has been developed based on the adopted County of Riverside Transportation Analysis Guidelines for Level of Service Vehicle Miles Traveled (December 2020) (**County Guidelines**) (1).

VMT SCREENING

Consistent with County Guidelines, projects should evaluate available screening criteria based on their location and project type to determine if a presumption of a less than significant transportation impact can be made. The following screening criteria are listed in the County Guidelines, and those applicable to the proposed Project (highlighted in **bold**) were selected for further review:

- **Small Projects**
- **High Quality Transit Areas (HQTA)**
- Local Serving Retail (not applicable)
- **Affordable Housing**

- Local Essential Service (not applicable)
- **Map-Based Screening**
- Redevelopment Projects (not applicable)

SMALL PROJECTS SCREENING

The County Guidelines list two types of screening criteria that may apply to "small projects." The first is a vehicle trip threshold of 110 trips per day. Trips anticipated to be generated by the Project are estimated based on trip generation rates collected by the Institute of Transportation Engineers (ITE) Trip Generation Manual, 11th Edition, 2021 (2). The Project is anticipated to generate 1,208 vehicle trip-ends (includes both inbound and outbound trips) per day that would exceed the 110 daily trip threshold (see Attachment B).

Also under the Small Projects screening criteria, County Guidelines state that land use projects estimated to generate greenhouse gas (GHG) emissions below 3,000 Metric Tons of Carbon Dioxide Equivalent ($MTCO_2e$) per year are also anticipated to result in a less than significant VMT impact.[1]

In July 2024, the California Air Pollution Control Officers Association (CAPCOA) in conjunction with other California air districts, including SCAQMD, released the latest version of the CalEEMod Version 2022.1.1.26. This latest version of CalEEMod supersedes the version used in the County Guidelines to determine land use intensity and development sizes that would be equivalent to 3,000 MTCO2e.

Based on GHG estimates for the Project using the latest CalEEMod tool to determine if the Project would exceed the County's impact threshold. The Project is forecast to generate a net total of 2,460.37 MTCO2e/yr., which would not exceed the 3,000 MTCO2e threshold (see Attachment C).

Small Projects screening criteria is met.

HIGH QUALITY TRANSIT AREAS (HQTA) SCREENING

Projects located within a Transit Priority Area (TPA) (i.e., within ½ mile of an existing "major transit stop"[2] or an existing stop along a "high-quality transit corridor"[3]) may be presumed to have a less than significant impact, absent substantial evidence to the contrary. However, the presumption may not be appropriate if a project:

- Has a Floor Area Ratio (FAR) of less than 0.75.
- Includes more parking for use by residents, customers, or employees of the project than required by the jurisdiction (if the jurisdiction requires the project to supply parking).

[1] County Guidelines; Page 19.
[2] Pub. Resources Code, § 21064.3 ("'Major transit stop' means a site containing an existing rail transit station, a ferry terminal served by either a bus or rail transit service, or the intersection of two or more major bus routes with a frequency of service interval of 15 minutes or less during the morning and afternoon peak commute periods.").
[3] Pub. Resources Code, § 21155 ("For purposes of this section, a high-quality transit corridor means a corridor with fixed route bus service with service intervals no longer than 15 minutes during peak commute hours.").

- Is inconsistent with the applicable Sustainable Communities Strategy (as determined by the lead agency, with input from the Metropolitan Planning Organization); or
- Replaces affordable residential units with a smaller number of moderate- or high-income residential units.

The Project does not intend to develop a FAR of greater than 0.75 to meet the secondary criteria. Therefore, irrespective of the Project's location to any HQTA, the Project would not qualify for this screening criteria.

HQTA screening criteria is not met.

AFFORDABLE HOUSING

Projects consisting of a high percentage of affordable housing, as determined by the Riverside County Planning and Transportation Departments, are presumed to have a less than significant impact on VMT as lower-income residents make fewer trips on average. The Project does not intend to develop any income-qualified dwelling units.

Affordable Housing screening criteria is not met.

MAP-BASED SCREENING

County Guidelines note that "residential and office projects that locate in areas with low VMT, and that incorporate similar features (i.e., density, mix of uses, transit accessibility), will tend to exhibit similarly low VMT." Urban Crossroads has obtained a VMT data table from County Staff for all traffic analysis zones (TAZs) within Riverside County that provides VMT per capita and VMT per employee for the purposes of identifying low VMT areas. The data utilizes the sub-regional Riverside Transportation Analysis Model (RIVTAM) to measure baseline VMT performance for individual TAZs and a comparison was made to the applicable impact threshold (e.g., VMT per employee for office or industrial land uses and VMT per capita for residential land uses).

Utilizing the RIVTAM, the parcel in which the Project resides was located to determine the appropriate TAZ. The Project resides in TAZ 3386, which in the base year RIVTAM model generates 35.7 VMT per capita. The current Countywide average VMT per capita is 15.2, which is the County's adopted threshold for residential projects. The Project resides in a TAZ that generates VMT per capita above the County threshold and does not qualify for low VMT area/map-based screening.

Map-Based screening criteria is not met.

CONCLUSION

In summary, the Project meets the Small Projects screening criteria and is therefore determined to have a less than significant VMT impact; no additional VMT analysis is required.

If you have any questions, please contact me directly at aso@urbanxroads.com.

REFERENCES

1. **County of Riverside.** *Transportation Analysis Guidelines for Level of Service Vehicle Miles Traveled.* County of Riverside : s.n., December 2020.
2. **Institute of Transportation Engineers.** *Trip Generation Manual.* 11th Edition. 2021.
3. **County of Riverside.** *Transportation Analysis Guidelines for Level of Service Vehicle Miles Traveled.* County of Riverside : s.n., December 2020.

ATTACHMENT A
PRELIMINARY SITE PLAN

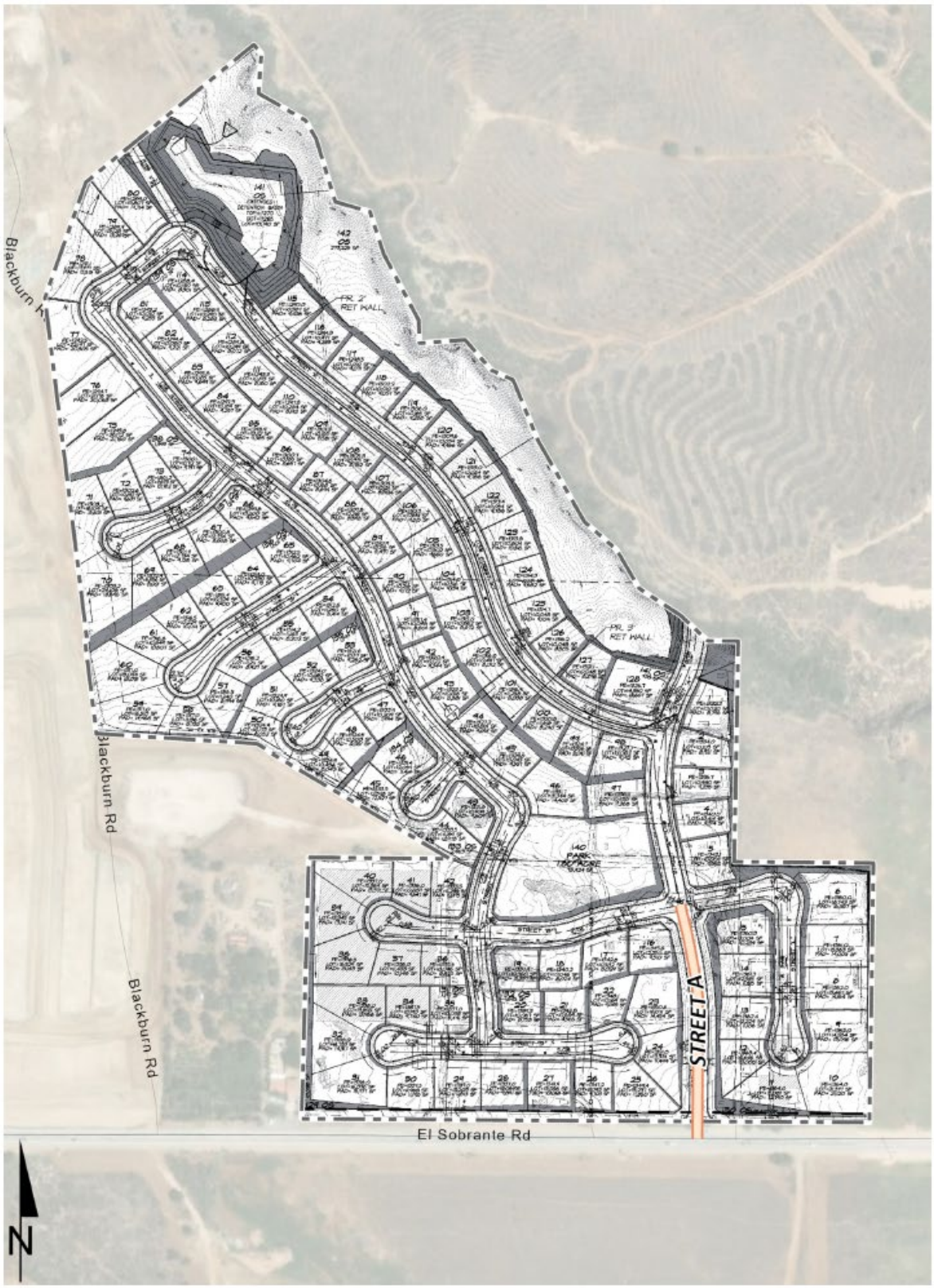
Blackburn Rd
Blackburn Rd
Blackburn Rd
STREET A
El Sobrante Rd
N

ATTACHMENT B
PROJECT TRIP GENERATION SUMMARY

Trip Generation Summary

Land Use[1]	Units[2]	ITE LU Code	AM Peak Hour In	AM Peak Hour Out	AM Peak Hour Total	PM Peak Hour In	PM Peak Hour Out	PM Peak Hour Total	Daily
Single Family Detached Residential	DU	210	0.18	0.52	0.70	0.59	0.35	0.94	9.43

[1] Trip Generation Source: Institute of Transportation Engineers (ITE), Trip Generation Manual, Eleventh Edition (2021).

[2] DU = Dwelling Units

Land Use	Quantity	Units[1]	AM Peak Hour In	AM Peak Hour Out	AM Peak Hour Total	PM Peak Hour In	PM Peak Hour Out	PM Peak Hour Total	Daily
Highland Grove II (TTM No. 38910)	128	DU	23	66	89	76	45	121	1,208

[1] DU = Dwelling Units

ATTACHMENT C
CALEEMOD OUTPUT WORKSHEETS

Riverside County - Highland Grove II Custom Report

Table of Contents

1. Basic Project Information

1.1. Basic Project Information

1.2. Land Use Types

1.3. User-Selected Emission Reduction Measures by Emissions Sector

2. Emissions Summary

2.1. Construction Emissions Compared Against Thresholds

2.2. Construction Emissions by Year, Unmitigated

2.4. Operations Emissions Compared Against Thresholds

2.5. Operations Emissions by Sector, Unmitigated

3. Construction Emissions Details

3.1. Demolition (2027) - Unmitigated

3.3. Site Preparation (2027) - Unmitigated

3.5. Grading (2027) - Unmitigated

3.7. Grading (2028) - Unmitigated

3.9. Building Construction (2028) - Unmitigated

3.11. Building Construction (2029) - Unmitigated

3.13. Building Construction (2030) - Unmitigated

3.15. Paving (2028) - Unmitigated

3.17. Architectural Coating (2028) - Unmitigated

4. Operations Emissions Details

4.1. Mobile Emissions by Land Use

4.1.1. Unmitigated

4.2. Energy

4.2.1. Electricity Emissions By Land Use - Unmitigated

4.2.3. Natural Gas Emissions By Land Use - Unmitigated

4.3. Area Emissions by Source

4.3.1. Unmitigated

4.4. Water Emissions by Land Use

4.4.1. Unmitigated

4.5. Waste Emissions by Land Use

4.5.1. Unmitigated

4.6. Refrigerant Emissions by Land Use

4.6.1. Unmitigated

4.7. Offroad Emissions By Equipment Type

4.7.1. Unmitigated

4.8. Stationary Emissions By Equipment Type

4.8.1. Unmitigated

4.9. User Defined Emissions By Equipment Type

4.9.1. Unmitigated

4.10. Soil Carbon Accumulation By Vegetation Type

4.10.1. Soil Carbon Accumulation By Vegetation Type - Unmitigated

4.10.2. Above and Belowground Carbon Accumulation by Land Use Type - Unmitigated

4.10.3. Avoided and Sequestered Emissions by Species - Unmitigated

5. Activity Data

5.1. Construction Schedule

5.2. Off-Road Equipment

5.2.1. Unmitigated

5.3. Construction Vehicles

5.3.1. Unmitigated

5.4. Vehicles

5.4.1. Construction Vehicle Control Strategies

5.5. Architectural Coatings

5.6. Dust Mitigation

5.6.1. Construction Earthmoving Activities

5.6.2. Construction Earthmoving Control Strategies

5.7. Construction Paving

5.8. Construction Electricity Consumption and Emissions Factors

5.9. Operational Mobile Sources

5.9.1. Unmitigated

5.10. Operational Area Sources

5.10.1. Hearths

5.10.1.1. Unmitigated

5.10.2. Architectural Coatings

5.10.3. Landscape Equipment

5.11. Operational Energy Consumption

5.11.1. Unmitigated

5.12. Operational Water and Wastewater Consumption

5.12.1. Unmitigated

5.13. Operational Waste Generation

5.13.1. Unmitigated
5.14. Operational Refrigeration and Air Conditioning Equipment
5.14.1. Unmitigated
5.15. Operational Off-Road Equipment
5.15.1. Unmitigated
5.16. Stationary Sources
5.16.1. Emergency Generators and Fire Pumps
5.16.2. Process Boilers
5.17. User Defined
5.18. Vegetation
5.18.1. Land Use Change
5.18.1.1. Unmitigated
5.18.1. Biomass Cover Type
5.18.1.1. Unmitigated
5.18.2. Sequestration
5.18.2.1. Unmitigated
6. Climate Risk Detailed Report
6.1. Climate Risk Summary

6.2. Initial Climate Risk Scores

6.3. Adjusted Climate Risk Scores

7. Health and Equity Details

7.1. CalEnviroScreen 4.0 Scores

7.2. Healthy Places Index Scores

7.3. Overall Health & Equity Scores

7.4. Health & Equity Measures

7.5. Evaluation Scorecard

7.6. Health & Equity Custom Measures

8. User Changes to Default Data

1. Basic Project Information

1.1. Basic Project Information

Data Field	Value
Project Name	Riverside County - Highland Grove II
Construction Start Date	1/4/2027
Operational Year	2030
Lead Agency	Riverside County
Land Use Scale	Project/site
Analysis Level for Defaults	County
Windspeed (m/s)	2.20
Precipitation (days)	9.00
Location	13300 El Sobrante Rd, Riverside, CA 92503, USA
County	Riverside-South Coast
City	Unincorporated
Air District	South Coast AQMD
Air Basin	South Coast
TAZ	5461
EDFZ	11
Electric Utility	Southern California Edison
Gas Utility	Southern California Gas
App Version	2022.1.1.26

1.2. Land Use Types

Land Use Subtype	Size	Unit	Lot Acreage	Building Area (sq ft)	Landscape Area (sq ft)	Special Landscape Area (sq ft)	Population	Description

Single Family Housing	128	Dwelling Unit	39.3	374,100	1,727,753	165,260	413	(SF home Lot Area 35.48 + 3.79 acre Basin and Downslope Area) -480 sqft driveway space -
Other Asphalt Surfaces	535	1000sqft	12.3	0.00	0.00	—	—	—
Other Non-Asphalt Surfaces	45.9	1000sqft	1.05	0.00	0.00	—	—	—
City Park	1.80	Acre	1.80	0.00	0.00	0.00	—	—
Other Non-Asphalt Surfaces	32.0	1000sqft	0.74	0.00	0.00	—	—	—

1.3. User-Selected Emission Reduction Measures by Emissions Sector

No measures selected

2. Emissions Summary

2.1. Construction Emissions Compared Against Thresholds

Criteria Pollutants (lb/day for daily, ton/yr for annual) and GHGs (lb/day for daily, MT/yr for annual)

Un/Mit.	TOG	ROG	NOx	CO	SO2	PM10E	PM10D	PM10T	PM2.5E	PM2.5D	PM2.5T	BCO2	NBCO2	CO2T	CH4	N2O	R	CO2e
Daily, Summer (Max)	—	—	—	—	—	—	—	—	—	—	—	—	—	—	—	—	—	—
Unmit.	37.2	36.6	37.4	39.2	0.07	1.56	26.5	28.1	1.44	13.5	15.0	—	8,064	8,064	0.29	0.41	5.81	8,177
Daily, Winter (Max)	—	—	—	—	—	—	—	—	—	—	—	—	—	—	—	—	—	—
Unmit.	2.81	2.31	22.7	23.0	0.05	0.84	5.06	5.57	0.78	1.89	2.37	—	6,034	6,034	0.19	0.41	0.14	6,162
Average Daily (Max)	—	—	—	—	—	—	—	—	—	—	—	—	—	—	—	—	—	—
Unmit.	8.60	8.33	13.6	16.9	0.03	0.51	5.13	5.65	0.48	2.07	2.54	—	4,243	4,243	0.14	0.26	1.48	4,306

Annual (Max)	—	—	—	—	—	—	—	—	—	—	—	—	—	—	—	—	—	—
Unmit.	1.57	1.52	2.49	3.09	0.01	0.09	0.94	1.03	0.09	0.38	0.46	—	703	703	0.02	0.04	0.24	713

2.2. Construction Emissions by Year, Unmitigated

Criteria Pollutants (lb/day for daily, ton/yr for annual) and GHGs (lb/day for daily, MT/yr for annual)

Year	TOG	ROG	NOx	CO	SO2	PM10E	PM10D	PM10T	PM2.5E	PM2.5D	PM2.5T	BCO2	NBCO2	CO2T	CH4	N2O	R	CO2e
Daily - Summer (Max)	—	—	—	—	—	—	—	—	—	—	—	—	—	—	—	—	—	—
2027	4.94	4.16	37.4	39.2	0.07	1.56	26.5	28.1	1.44	13.5	15.0	—	7,362	7,362	0.29	0.41	5.36	7,391
2028	37.2	36.6	23.9	36.7	0.07	0.78	5.06	5.55	0.72	1.89	2.34	—	8,064	8,064	0.27	0.40	5.81	8,177
2029	2.04	1.72	14.3	23.4	0.04	0.45	0.72	1.17	0.41	0.17	0.59	—	4,823	4,823	0.17	0.11	2.39	4,862
2030	1.98	1.66	13.9	23.2	0.04	0.42	0.72	1.14	0.39	0.17	0.56	—	4,802	4,802	0.17	0.11	2.12	4,841
Daily - Winter (Max)	—	—	—	—	—	—	—	—	—	—	—	—	—	—	—	—	—	—
2027	2.81	2.31	22.7	20.0	0.05	0.84	5.06	5.57	0.78	1.89	2.37	—	6,034	6,034	0.19	0.41	0.14	6,162
2028	2.09	1.76	14.9	23.0	0.04	0.49	5.06	5.55	0.45	1.89	2.34	—	5,509	5,509	0.17	0.40	0.13	5,633
2029	2.03	1.70	14.3	22.8	0.04	0.45	0.72	1.17	0.41	0.17	0.59	—	4,775	4,775	0.17	0.11	0.06	4,812
2030	1.97	1.65	14.0	22.6	0.04	0.42	0.72	1.14	0.39	0.17	0.56	—	4,755	4,755	0.17	0.11	0.05	4,792
Average Daily	—	—	—	—	—	—	—	—	—	—	—	—	—	—	—	—	—	—
2027	1.71	1.41	13.6	13.1	0.03	0.51	5.13	5.65	0.48	2.07	2.54	—	4,180	4,180	0.13	0.26	1.48	4,262
2028	8.60	8.33	12.2	16.9	0.03	0.41	1.65	2.06	0.38	0.56	0.93	—	4,243	4,243	0.14	0.19	1.33	4,306
2029	1.45	1.21	10.2	16.4	0.03	0.32	0.51	0.83	0.29	0.12	0.42	—	3,416	3,416	0.12	0.08	0.74	3,443
2030	1.37	1.14	9.67	15.8	0.03	0.29	0.50	0.79	0.27	0.12	0.39	—	3,298	3,298	0.12	0.08	0.63	3,325
Annual	—	—	—	—	—	—	—	—	—	—	—	—	—	—	—	—	—	—
2027	0.31	0.26	2.49	2.39	0.01	0.09	0.94	1.03	0.09	0.38	0.46	—	692	692	0.02	0.04	0.24	706
2028	1.57	1.52	2.23	3.09	0.01	0.07	0.30	0.38	0.07	0.10	0.17	—	703	703	0.02	0.03	0.22	713

2029	0.26	0.22	1.86	2.99	0.01	0.06	0.09	0.15	0.05	0.02	0.08	—	566	566	0.02	0.01	0.12	570
2030	0.25	0.21	1.77	2.87	0.01	0.05	0.09	0.14	0.05	0.02	0.07	—	546	546	0.02	0.01	0.11	550

2.4. Operations Emissions Compared Against Thresholds

Criteria Pollutants (lb/day for daily, ton/yr for annual) and GHGs (lb/day for daily, MT/yr for annual)

Un/Mit.	TOG	ROG	NOx	CO	SO2	PM10E	PM10D	PM10T	PM2.5E	PM2.5D	PM2.5T	BCO2	NBCO2	CO2T	CH4	N2O	R	CO2e
Daily, Summer (Max)	—	—	—	—	—	—	—	—	—	—	—	—	—	—	—	—	—	—
Unmit.	14.5	13.8	6.95	48.3	0.13	0.31	10.4	10.7	0.31	2.65	2.95	73.2	17,142	17,215	8.04	0.52	29.3	17,599
Daily, Winter (Max)	—	—	—	—	—	—	—	—	—	—	—	—	—	—	—	—	—	—
Unmit.	13.5	13.0	7.16	34.5	0.12	0.31	10.4	10.7	0.31	2.65	2.95	73.2	16,437	16,510	8.05	0.53	3.37	16,872
Average Daily (Max)	—	—	—	—	—	—	—	—	—	—	—	—	—	—	—	—	—	—
Unmit.	13.8	13.3	5.60	39.9	0.11	0.18	10.4	10.5	0.17	2.63	2.80	73.2	14,415	14,488	8.01	0.53	14.2	14,861
Annual (Max)	—	—	—	—	—	—	—	—	—	—	—	—	—	—	—	—	—	—
Unmit.	2.51	2.42	1.02	7.29	0.02	0.03	1.89	1.92	0.03	0.48	0.51	12.1	2,387	2,399	1.33	0.09	2.34	2,460

2.5. Operations Emissions by Sector, Unmitigated

Criteria Pollutants (lb/day for daily, ton/yr for annual) and GHGs (lb/day for daily, MT/yr for annual)

Sector	TOG	ROG	NOx	CO	SO2	PM10E	PM10D	PM10T	PM2.5E	PM2.5D	PM2.5T	BCO2	NBCO2	CO2T	CH4	N2O	R	CO2e
Daily, Summer (Max)	—	—	—	—	—	—	—	—	—	—	—	—	—	—	—	—	—	—
Mobile	4.70	4.29	3.93	39.7	0.11	0.07	10.4	10.5	0.07	2.65	2.71	—	11,300	11,300	0.40	0.47	26.6	11,476
Area	9.62	9.48	1.87	8.05	0.01	0.15	—	0.15	0.15	—	0.15	0.00	2,310	2,310	0.04	< 0.005	—	2,313
Energy	0.13	0.07	1.15	0.49	0.01	0.09	—	0.09	0.09	—	0.09	—	3,201	3,201	0.24	0.02	—	3,212

Water	—	—	—	—	—	—	—	—	—	—	—	9.98	331	341	1.04	0.03	—	375
Waste	—	—	—	—	—	—	—	—	—	—	—	63.2	0.00	63.2	6.31	0.00	—	221
Refrig.	—	—	—	—	—	—	—	—	—	—	—	—	—	—	—	—	2.68	2.68
Total	14.5	13.8	6.95	48.3	0.13	0.31	10.4	10.7	0.31	2.65	2.95	73.2	17,142	17,215	8.04	0.52	29.3	17,599
Daily, Winter (Max)	—	—	—	—	—	—	—	—	—	—	—	—	—	—	—	—	—	—
Mobile	4.46	4.04	4.21	33.2	0.10	0.07	10.4	10.5	0.07	2.65	2.71	—	10,614	10,614	0.41	0.48	0.69	10,769
Area	8.95	8.85	1.80	0.77	0.01	0.15	—	0.15	0.15	—	0.15	0.00	2,291	2,291	0.04	< 0.005	—	2,293
Energy	0.13	0.07	1.15	0.49	0.01	0.09	—	0.09	0.09	—	0.09	—	3,201	3,201	0.24	0.02	—	3,212
Water	—	—	—	—	—	—	—	—	—	—	—	9.98	331	341	1.04	0.03	—	375
Waste	—	—	—	—	—	—	—	—	—	—	—	63.2	0.00	63.2	6.31	0.00	—	221
Refrig.	—	—	—	—	—	—	—	—	—	—	—	—	—	—	—	—	2.68	2.68
Total	13.5	13.0	7.16	34.5	0.12	0.31	10.4	10.7	0.31	2.65	2.95	73.2	16,437	16,510	8.05	0.53	3.37	16,872
Average Daily	—	—	—	—	—	—	—	—	—	—	—	—	—	—	—	—	—	—
Mobile	4.42	4.00	4.28	34.4	0.10	0.07	10.4	10.4	0.07	2.63	2.70	—	10,713	10,713	0.41	0.49	11.5	10,880
Area	9.21	9.18	0.17	5.04	< 0.005	0.01	—	0.01	0.01	—	0.01	0.00	170	170	< 0.005	< 0.005	—	170
Energy	0.13	0.07	1.15	0.49	0.01	0.09	—	0.09	0.09	—	0.09	—	3,201	3,201	0.24	0.02	—	3,212
Water	—	—	—	—	—	—	—	—	—	—	—	9.98	331	341	1.04	0.03	—	375
Waste	—	—	—	—	—	—	—	—	—	—	—	63.2	0.00	63.2	6.31	0.00	—	221
Refrig.	—	—	—	—	—	—	—	—	—	—	—	—	—	—	—	—	2.68	2.68
Total	13.8	13.3	5.60	39.9	0.11	0.18	10.4	10.5	0.17	2.63	2.80	73.2	14,415	14,488	8.01	0.53	14.2	14,861
Annual	—	—	—	—	—	—	—	—	—	—	—	—	—	—	—	—	—	—
Mobile	0.81	0.73	0.78	6.28	0.02	0.01	1.89	1.91	0.01	0.48	0.49	—	1,774	1,774	0.07	0.08	1.90	1,801
Area	1.68	1.68	0.03	0.92	< 0.005	< 0.005	—	< 0.005	< 0.005	—	< 0.005	0.00	28.2	28.2	< 0.005	< 0.005	—	28.2
Energy	0.02	0.01	0.21	0.09	< 0.005	0.02	—	0.02	0.02	—	0.02	—	530	530	0.04	< 0.005	—	532
Water	—	—	—	—	—	—	—	—	—	—	—	1.65	54.8	56.4	0.17	< 0.005	—	62.1
Waste	—	—	—	—	—	—	—	—	—	—	—	10.5	0.00	10.5	1.05	0.00	—	36.6

Refrig.	—	—	—	—	—	—	—	—	—	—	—	—	—	—	—	—	0.44	0.44
Total	2.51	2.42	1.02	7.29	0.02	0.03	1.89	1.92	0.03	0.48	0.51	12.1	2,387	2,399	1.33	0.09	2.34	2,460

3. Construction Emissions Details

3.1. Demolition (2027) - Unmitigated

Criteria Pollutants (lb/day for daily, ton/yr for annual) and GHGs (lb/day for daily, MT/yr for annual)

Location	TOG	ROG	NOx	CO	SO2	PM10E	PM10D	PM10T	PM2.5E	PM2.5D	PM2.5T	BCO2	NBCO2	CO2T	CH4	N2O	R	CO2e
Onsite	—	—	—	—	—	—	—	—	—	—	—	—	—	—	—	—	—	—
Daily, Summer (Max)	—	—	—	—	—	—	—	—	—	—	—	—	—	—	—	—	—	—
Off-Road Equipment	2.64	2.21	19.9	18.6	0.03	0.80	—	0.80	0.73	—	0.73	—	3,427	3,427	0.14	0.03	—	3,439
Demolition	—	—	—	—	—	—	3.12	3.12	—	0.47	0.47	—	—	—	—	—	—	—
Onsite truck	0.00	0.00	0.00	0.00	0.00	0.00	0.00	0.00	0.00	0.00	0.00	—	0.00	0.00	0.00	0.00	0.00	0.00
Daily, Winter (Max)	—	—	—	—	—	—	—	—	—	—	—	—	—	—	—	—	—	—
Off-Road Equipment	2.64	2.21	19.9	18.6	0.03	0.80	—	0.80	0.73	—	0.73	—	3,427	3,427	0.14	0.03	—	3,439
Demolition	—	—	—	—	—	—	3.12	3.12	—	0.47	0.47	—	—	—	—	—	—	—
Onsite truck	0.00	0.00	0.00	0.00	0.00	0.00	0.00	0.00	0.00	0.00	0.00	—	0.00	0.00	0.00	0.00	0.00	0.00
Average Daily	—	—	—	—	—	—	—	—	—	—	—	—	—	—	—	—	—	—

Off-Road	0.51	0.42	3.82	3.57	0.01	0.15	—	0.15	0.14	—	0.14	—	657	657	0.03	0.01	—	659
Demolition	—	—	—	—	—	—	0.60	0.60	—	0.09	0.09	—	—	—	—	—	—	—
Onsite truck	0.00	0.00	0.00	0.00	0.00	0.00	0.00	0.00	0.00	0.00	0.00	—	0.00	0.00	0.00	0.00	0.00	0.00
Annual	—	—	—	—	—	—	—	—	—	—	—	—	—	—	—	—	—	—
Off-Road Equipment	0.09	0.08	0.70	0.65	< 0.005	0.03	—	0.03	0.03	—	0.03	—	109	109	< 0.005	< 0.005	—	109
Demolition	—	—	—	—	—	—	0.11	0.11	—	0.02	0.02	—	—	—	—	—	—	—
Onsite truck	0.00	0.00	0.00	0.00	0.00	0.00	0.00	0.00	0.00	0.00	0.00	—	0.00	0.00	0.00	0.00	0.00	0.00
Offsite	—	—	—	—	—	—	—	—	—	—	—	—	—	—	—	—	—	—
Daily, Summer (Max)	—	—	—	—	—	—	—	—	—	—	—	—	—	—	—	—	—	—
Worker	0.07	0.06	0.05	1.00	0.00	0.00	0.20	0.20	0.00	0.05	0.05	—	203	203	< 0.005	0.01	0.63	206
Vendor	0.00	0.00	0.00	0.00	0.00	0.00	0.00	0.00	0.00	0.00	0.00	—	0.00	0.00	0.00	0.00	0.00	0.00
Hauling	0.11	0.04	2.63	0.65	0.02	0.05	0.66	0.71	0.05	0.18	0.23	—	2,419	2,419	0.05	0.38	4.66	2,537
Daily, Winter (Max)	—	—	—	—	—	—	—	—	—	—	—	—	—	—	—	—	—	—
Worker	0.06	0.06	0.06	0.75	0.00	0.00	0.20	0.20	0.00	0.05	0.05	—	187	187	< 0.005	0.01	0.02	189
Vendor	0.00	0.00	0.00	0.00	0.00	0.00	0.00	0.00	0.00	0.00	0.00	—	0.00	0.00	0.00	0.00	0.00	0.00
Hauling	0.10	0.04	2.76	0.66	0.02	0.05	0.66	0.71	0.05	0.18	0.23	—	2,420	2,420	0.05	0.38	0.12	2,534
Average Daily	—	—	—	—	—	—	—	—	—	—	—	—	—	—	—	—	—	—
Worker	0.01	0.01	0.01	0.15	0.00	0.00	0.04	0.04	0.00	0.01	0.01	—	36.3	36.3	< 0.005	< 0.005	0.05	36.7
Vendor	0.00	0.00	0.00	0.00	0.00	0.00	0.00	0.00	0.00	0.00	0.00	—	0.00	0.00	0.00	0.00	0.00	0.00
Hauling	0.02	0.01	0.53	0.13	< 0.005	0.01	0.13	0.14	0.01	0.04	0.04	—	464	464	0.01	0.07	0.39	486

Annual	—	—	—	—	—	—	—	—	—	—	—	—	—	—	—	—	—	—
Worker	< 0.005	< 0.005	< 0.005	0.03	0.00	0.00	0.01	0.01	0.00	< 0.005	< 0.005	—	6.00	6.00	< 0.005	< 0.005	0.01	6.08
Vendor	0.00	0.00	0.00	0.00	0.00	0.00	0.00	0.00	0.00	0.00	0.00	—	0.00	0.00	0.00	0.00	0.00	0.00
Hauling	< 0.005	< 0.005	0.10	0.02	< 0.005	< 0.005	0.02	0.02	< 0.005	0.01	0.01	—	76.8	76.8	< 0.005	0.01	0.06	80.5

3.3. Site Preparation (2027) - Unmitigated

Criteria Pollutants (lb/day for daily, ton/yr for annual) and GHGs (lb/day for daily, MT/yr for annual)

Location	TOG	ROG	NOx	CO	SO2	PM10E	PM10D	PM10T	PM2.5E	PM2.5D	PM2.5T	BCO2	NBCO2	CO2T	CH4	N2O	R	CO2e
Onsite	—	—	—	—	—	—	—	—	—	—	—	—	—	—	—	—	—	—
Daily, Summer (Max)	—	—	—	—	—	—	—	—	—	—	—	—	—	—	—	—	—	—
Off-Road Equipment	4.84	4.07	37.3	37.7	0.07	1.56	—	1.56	1.44	—	1.44	—	7,058	7,058	0.29	0.06	—	7,082
Dust From Material Movement	—	—	—	—	—	—	26.2	26.2	—	13.5	13.5	—	—	—	—	—	—	—
Onsite truck	0.00	0.00	0.00	0.00	0.00	0.00	0.00	0.00	0.00	0.00	0.00	—	0.00	0.00	0.00	0.00	0.00	0.00
Daily, Winter (Max)	—	—	—	—	—	—	—	—	—	—	—	—	—	—	—	—	—	—
Average Daily	—	—	—	—	—	—	—	—	—	—	—	—	—	—	—	—	—	—
Off-Road Equipment	0.40	0.33	3.06	3.10	0.01	0.13	—	0.13	0.12	—	0.12	—	580	580	0.02	< 0.005	—	582
Dust From Material Movement	—	—	—	—	—	—	2.15	2.15	—	1.11	1.11	—	—	—	—	—	—	—

Onsite truck	0.00	0.00	0.00	0.00	0.00	0.00	0.00	0.00	0.00	0.00	0.00	—	0.00	0.00	0.00	0.00	0.00	0.00
Annual	—	—	—	—	—	—	—	—	—	—	—	—	—	—	—	—	—	—
Off-Road Equipment	0.07	0.06	0.56	0.56	< 0.005	0.02	—	0.02	0.02	—	0.02	—	96.0	96.0	< 0.005	< 0.005	—	96.4
Dust From Material Movement	—	—	—	—	—	—	0.39	0.39	—	0.20	0.20	—	—	—	—	—	—	—
Onsite truck	0.00	0.00	0.00	0.00	0.00	0.00	0.00	0.00	0.00	0.00	0.00	—	0.00	0.00	0.00	0.00	0.00	0.00
Offsite	—	—	—	—	—	—	—	—	—	—	—	—	—	—	—	—	—	—
Daily, Summer (Max)	—	—	—	—	—	—	—	—	—	—	—	—	—	—	—	—	—	—
Worker	0.10	0.09	0.08	1.49	0.00	0.00	0.29	0.29	0.00	0.07	0.07	—	305	305	< 0.005	0.01	0.95	309
Vendor	0.00	0.00	0.00	0.00	0.00	0.00	0.00	0.00	0.00	0.00	0.00	—	0.00	0.00	0.00	0.00	0.00	0.00
Hauling	0.00	0.00	0.00	0.00	0.00	0.00	0.00	0.00	0.00	0.00	0.00	—	0.00	0.00	0.00	0.00	0.00	0.00
Daily, Winter (Max)	—	—	—	—	—	—	—	—	—	—	—	—	—	—	—	—	—	—
Average Daily	—	—	—	—	—	—	—	—	—	—	—	—	—	—	—	—	—	—
Worker	0.01	0.01	0.01	0.10	0.00	0.00	0.02	0.02	0.00	0.01	0.01	—	23.3	23.3	< 0.005	< 0.005	0.03	23.6
Vendor	0.00	0.00	0.00	0.00	0.00	0.00	0.00	0.00	0.00	0.00	0.00	—	0.00	0.00	0.00	0.00	0.00	0.00
Hauling	0.00	0.00	0.00	0.00	0.00	0.00	0.00	0.00	0.00	0.00	0.00	—	0.00	0.00	0.00	0.00	0.00	0.00
Annual	—	—	—	—	—	—	—	—	—	—	—	—	—	—	—	—	—	—
Worker	< 0.005	< 0.005	< 0.005	0.02	0.00	0.00	< 0.005	< 0.005	0.00	< 0.005	< 0.005	—	3.86	3.86	< 0.005	< 0.005	0.01	3.91
Vendor	0.00	0.00	0.00	0.00	0.00	0.00	0.00	0.00	0.00	0.00	0.00	—	0.00	0.00	0.00	0.00	0.00	0.00
Hauling	0.00	0.00	0.00	0.00	0.00	0.00	0.00	0.00	0.00	0.00	0.00	—	0.00	0.00	0.00	0.00	0.00	0.00

3.5. Grading (2027) - Unmitigated

Criteria Pollutants (lb/day for daily, ton/yr for annual) and GHGs (lb/day for daily, MT/yr for annual)

Location	TOG	ROG	NOx	CO	SO2	PM10E	PM10D	PM10T	PM2.5E	PM2.5D	PM2.5T	BCO2	NBCO2	CO2T	CH4	N2O	R	CO2e
Onsite	—	—	—	—	—	—	—	—	—	—	—	—	—	—	—	—	—	—
Daily, Summer (Max)	—	—	—	—	—	—	—	—	—	—	—	—	—	—	—	—	—	—
Off-Road Equipment	1.58	1.33	11.5	12.3	0.03	0.47	—	0.47	0.43	—	0.43	—	2,969	2,969	0.12	0.02	—	2,979
Dust From Material Movement	—	—	—	—	—	—	4.15	4.15	—	1.65	1.65	—	—	—	—	—	—	—
Onsite truck	0.00	0.00	0.00	0.00	0.00	0.00	0.00	0.00	0.00	0.00	0.00	—	0.00	0.00	0.00	0.00	0.00	0.00
Daily, Winter (Max)	—	—	—	—	—	—	—	—	—	—	—	—	—	—	—	—	—	—
Off-Road Equipment	1.58	1.33	11.5	12.3	0.03	0.47	—	0.47	0.43	—	0.43	—	2,969	2,969	0.12	0.02	—	2,979
Dust From Material Movement	—	—	—	—	—	—	4.15	4.15	—	1.65	1.65	—	—	—	—	—	—	—
Onsite truck	0.00	0.00	0.00	0.00	0.00	0.00	0.00	0.00	0.00	0.00	0.00	—	0.00	0.00	0.00	0.00	0.00	0.00
Average Daily	—	—	—	—	—	—	—	—	—	—	—	—	—	—	—	—	—	—
Off-Road Equipment	0.69	0.58	5.00	5.33	0.01	0.20	—	0.20	0.19	—	0.19	—	1,290	1,290	0.05	0.01	—	1,294

Dust From Material Movement	—	—	—	—	—	—	1.80	1.80	—	0.72	0.72	—	—	—	—	—	—	—
Onsite truck	0.00	0.00	0.00	0.00	0.00	0.00	0.00	0.00	0.00	0.00	0.00	—	0.00	0.00	0.00	0.00	0.00	0.00
Annual	—	—	—	—	—	—	—	—	—	—	—	—	—	—	—	—	—	—
Off-Road Equipment	0.13	0.11	0.91	0.97	< 0.005	0.04	—	0.04	0.03	—	0.03	—	214	214	0.01	< 0.005	—	214
Dust From Material Movement	—	—	—	—	—	—	0.33	0.33	—	0.13	0.13	—	—	—	—	—	—	—
Onsite truck	0.00	0.00	0.00	0.00	0.00	0.00	0.00	0.00	0.00	0.00	0.00	—	0.00	0.00	0.00	0.00	0.00	0.00
Offsite	—	—	—	—	—	—	—	—	—	—	—	—	—	—	—	—	—	—
Daily, Summer (Max)	—	—	—	—	—	—	—	—	—	—	—	—	—	—	—	—	—	—
Worker	0.09	0.08	0.07	1.33	0.00	0.00	0.26	0.26	0.00	0.06	0.06	—	271	271	< 0.005	0.01	0.84	274
Vendor	0.00	0.00	0.00	0.00	0.00	0.00	0.00	0.00	0.00	0.00	0.00	—	0.00	0.00	0.00	0.00	0.00	0.00
Hauling	0.10	0.04	2.55	0.63	0.02	0.05	0.64	0.69	0.05	0.18	0.23	—	2,347	2,347	0.05	0.37	4.52	2,462
Daily, Winter (Max)	—	—	—	—	—	—	—	—	—	—	—	—	—	—	—	—	—	—
Worker	0.09	0.08	0.08	1.00	0.00	0.00	0.26	0.26	0.00	0.06	0.06	—	249	249	< 0.005	0.01	0.02	252
Vendor	0.00	0.00	0.00	0.00	0.00	0.00	0.00	0.00	0.00	0.00	0.00	—	0.00	0.00	0.00	0.00	0.00	0.00
Hauling	0.10	0.04	2.68	0.64	0.02	0.05	0.64	0.69	0.05	0.18	0.23	—	2,348	2,348	0.05	0.37	0.12	2,459
Average Daily	—	—	—	—	—	—	—	—	—	—	—	—	—	—	—	—	—	—
Worker	0.04	0.03	0.04	0.46	0.00	0.00	0.11	0.11	0.00	0.03	0.03	—	110	110	< 0.005	< 0.005	0.16	111
Vendor	0.00	0.00	0.00	0.00	0.00	0.00	0.00	0.00	0.00	0.00	0.00	—	0.00	0.00	0.00	0.00	0.00	0.00

Hauling	0.04	0.02	1.17	0.28	0.01	0.02	0.28	0.30	0.02	0.08	0.10	—	1,020	1,020	0.02	0.16	0.85	1,069
Annual	—	—	—	—	—	—	—	—	—	—	—	—	—	—	—	—	—	—
Worker	0.01	0.01	0.01	0.08	0.00	0.00	0.02	0.02	0.00	< 0.005	< 0.005	—	18.1	18.1	< 0.005	< 0.005	0.03	18.4
Vendor	0.00	0.00	0.00	0.00	0.00	0.00	0.00	0.00	0.00	0.00	0.00	—	0.00	0.00	0.00	0.00	0.00	0.00
Hauling	0.01	< 0.005	0.21	0.05	< 0.005	< 0.005	0.05	0.05	< 0.005	0.01	0.02	—	169	169	< 0.005	0.03	0.14	177

3.7. Grading (2028) - Unmitigated

Criteria Pollutants (lb/day for daily, ton/yr for annual) and GHGs (lb/day for daily, MT/yr for annual)

Location	TOG	ROG	NOx	CO	SO2	PM10E	PM10D	PM10T	PM2.5E	PM2.5D	PM2.5T	BCO2	NBCO2	CO2T	CH4	N2O	R	CO2e
Onsite	—	—	—	—	—	—	—	—	—	—	—	—	—	—	—	—	—	—
Daily, Summer (Max)	—	—	—	—	—	—	—	—	—	—	—	—	—	—	—	—	—	—
Off-Road Equipment	1.54	1.30	10.9	12.2	0.03	0.44	—	0.44	0.41	—	0.41	—	2,969	2,969	0.12	0.02	—	2,979
Dust From Material Movement	—	—	—	—	—	—	4.15	4.15	—	1.65	1.65	—	—	—	—	—	—	—
Onsite truck	0.00	0.00	0.00	0.00	0.00	0.00	0.00	0.00	0.00	0.00	0.00	—	0.00	0.00	0.00	0.00	0.00	0.00
Daily, Winter (Max)	—	—	—	—	—	—	—	—	—	—	—	—	—	—	—	—	—	—
Off-Road Equipment	1.54	1.30	10.9	12.2	0.03	0.44	—	0.44	0.41	—	0.41	—	2,969	2,969	0.12	0.02	—	2,979
Dust From Material Movement	—	—	—	—	—	—	4.15	4.15	—	1.65	1.65	—	—	—	—	—	—	—

Onsite truck	0.00	0.00	0.00	0.00	0.00	0.00	0.00	0.00	0.00	0.00	0.00	—	0.00	0.00	0.00	0.00	0.00	0.00
Average Daily	—	—	—	—	—	—	—	—	—	—	—	—	—	—	—	—	—	—
Off-Road Equipment	0.36	0.30	2.55	2.85	0.01	0.10	—	0.10	0.09	—	0.09	—	691	691	0.03	0.01	—	694
Dust From Material Movement	—	—	—	—	—	—	0.97	0.97	—	0.38	0.38	—	—	—	—	—	—	—
Onsite truck	0.00	0.00	0.00	0.00	0.00	0.00	0.00	0.00	0.00	0.00	0.00	—	0.00	0.00	0.00	0.00	0.00	0.00
Annual	—	—	—	—	—	—	—	—	—	—	—	—	—	—	—	—	—	—
Off-Road Equipment	0.07	0.06	0.47	0.52	< 0.005	0.02	—	0.02	0.02	—	0.02	—	114	114	< 0.005	< 0.005	—	115
Dust From Material Movement	—	—	—	—	—	—	0.18	0.18	—	0.07	0.07	—	—	—	—	—	—	—
Onsite truck	0.00	0.00	0.00	0.00	0.00	0.00	0.00	0.00	0.00	0.00	0.00	—	0.00	0.00	0.00	0.00	0.00	0.00
Offsite	—	—	—	—	—	—	—	—	—	—	—	—	—	—	—	—	—	—
Daily, Summer (Max)	—	—	—	—	—	—	—	—	—	—	—	—	—	—	—	—	—	—
Worker	0.09	0.08	0.07	1.24	0.00	0.00	0.26	0.26	0.00	0.06	0.06	—	266	266	< 0.005	0.01	0.75	269
Vendor	0.00	0.00	0.00	0.00	0.00	0.00	0.00	0.00	0.00	0.00	0.00	—	0.00	0.00	0.00	0.00	0.00	0.00
Hauling	0.10	0.04	2.49	0.62	0.02	0.05	0.64	0.69	0.05	0.18	0.23	—	2,294	2,294	0.05	0.37	4.17	2,409
Daily, Winter (Max)	—	—	—	—	—	—	—	—	—	—	—	—	—	—	—	—	—	—
Worker	0.07	0.07	0.08	0.94	0.00	0.00	0.26	0.26	0.00	0.06	0.06	—	244	244	< 0.005	0.01	0.02	247

Vendor	0.00	0.00	0.00	0.00	0.00	0.00	0.00	0.00	0.00	0.00	0.00	—	0.00	0.00	0.00	0.00	0.00	0.00
Hauling	0.10	0.04	2.60	0.63	0.02	0.05	0.64	0.69	0.05	0.18	0.23	—	2,295	2,295	0.05	0.37	0.11	2,406
Average Daily	—	—	—	—	—	—	—	—	—	—	—	—	—	—	—	—	—	—
Worker	0.02	0.02	0.02	0.23	0.00	0.00	0.06	0.06	0.00	0.01	0.01	—	57.6	57.6	< 0.005	< 0.005	0.08	58.4
Vendor	0.00	0.00	0.00	0.00	0.00	0.00	0.00	0.00	0.00	0.00	0.00	—	0.00	0.00	0.00	0.00	0.00	0.00
Hauling	0.02	0.01	0.61	0.14	< 0.005	0.01	0.15	0.16	0.01	0.04	0.05	—	534	534	0.01	0.09	0.42	561
Annual	—	—	—	—	—	—	—	—	—	—	—	—	—	—	—	—	—	—
Worker	< 0.005	< 0.005	< 0.005	0.04	0.00	0.00	0.01	0.01	0.00	< 0.005	< 0.005	—	9.54	9.54	< 0.005	< 0.005	0.01	9.67
Vendor	0.00	0.00	0.00	0.00	0.00	0.00	0.00	0.00	0.00	0.00	0.00	—	0.00	0.00	0.00	0.00	0.00	0.00
Hauling	< 0.005	< 0.005	0.11	0.03	< 0.005	< 0.005	0.03	0.03	< 0.005	0.01	0.01	—	88.5	88.5	< 0.005	0.01	0.07	92.8

3.9. Building Construction (2028) - Unmitigated

Criteria Pollutants (lb/day for daily, ton/yr for annual) and GHGs (lb/day for daily, MT/yr for annual)

Location	TOG	ROG	NOx	CO	SO2	PM10E	PM10D	PM10T	PM2.5E	PM2.5D	PM2.5T	BCO2	NBCO2	CO2T	CH4	N2O	R	CO2e
Onsite	—	—	—	—	—	—	—	—	—	—	—	—	—	—	—	—	—	—
Daily, Summer (Max)	—	—	—	—	—	—	—	—	—	—	—	—	—	—	—	—	—	—
Off-Road Equipment	1.90	1.59	14.3	20.7	0.04	0.48	—	0.48	0.44	—	0.44	—	3,838	3,838	0.16	0.03	—	3,851
Onsite truck	0.00	0.00	0.00	0.00	0.00	0.00	0.00	0.00	0.00	0.00	0.00	—	0.00	0.00	0.00	0.00	0.00	0.00
Daily, Winter (Max)	—	—	—	—	—	—	—	—	—	—	—	—	—	—	—	—	—	—
Off-Road Equipment	1.90	1.59	14.3	20.7	0.04	0.48	—	0.48	0.44	—	0.44	—	3,838	3,838	0.16	0.03	—	3,851

Onsite truck	0.00	0.00	0.00	0.00	0.00	0.00	0.00	0.00	0.00	0.00	0.00	—	0.00	0.00	0.00	0.00	0.00	0.00
Average Daily	—	—	—	—	—	—	—	—	—	—	—	—	—	—	—	—	—	—
Off-Road Equipment	0.91	0.76	6.85	9.93	0.02	0.23	—	0.23	0.21	—	0.21	—	1,840	1,840	0.07	0.01	—	1,846
Onsite truck	0.00	0.00	0.00	0.00	0.00	0.00	0.00	0.00	0.00	0.00	0.00	—	0.00	0.00	0.00	0.00	0.00	0.00
Annual	—	—	—	—	—	—	—	—	—	—	—	—	—	—	—	—	—	—
Off-Road Equipment	0.17	0.14	1.25	1.81	< 0.005	0.04	—	0.04	0.04	—	0.04	—	305	305	0.01	< 0.005	—	306
Onsite truck	0.00	0.00	0.00	0.00	0.00	0.00	0.00	0.00	0.00	0.00	0.00	—	0.00	0.00	0.00	0.00	0.00	0.00
Offsite	—	—	—	—	—	—	—	—	—	—	—	—	—	—	—	—	—	—
Daily, Summer (Max)	—	—	—	—	—	—	—	—	—	—	—	—	—	—	—	—	—	—
Worker	0.20	0.18	0.16	2.85	0.00	0.00	0.60	0.60	0.00	0.14	0.14	—	612	612	0.01	0.02	1.74	621
Vendor	0.02	0.01	0.40	0.13	< 0.005	0.01	0.12	0.12	0.01	0.03	0.04	—	395	395	0.01	0.06	0.94	414
Hauling	0.00	0.00	0.00	0.00	0.00	0.00	0.00	0.00	0.00	0.00	0.00	—	0.00	0.00	0.00	0.00	0.00	0.00
Daily, Winter (Max)	—	—	—	—	—	—	—	—	—	—	—	—	—	—	—	—	—	—
Worker	0.17	0.17	0.18	2.16	0.00	0.00	0.60	0.60	0.00	0.14	0.14	—	563	563	0.01	0.02	0.05	570
Vendor	0.02	0.01	0.42	0.13	< 0.005	0.01	0.12	0.12	0.01	0.03	0.04	—	396	396	0.01	0.06	0.02	414
Hauling	0.00	0.00	0.00	0.00	0.00	0.00	0.00	0.00	0.00	0.00	0.00	—	0.00	0.00	0.00	0.00	0.00	0.00
Average Daily	—	—	—	—	—	—	—	—	—	—	—	—	—	—	—	—	—	—
Worker	0.08	0.08	0.09	1.09	0.00	0.00	0.29	0.29	0.00	0.07	0.07	—	273	273	< 0.005	0.01	0.36	277
Vendor	0.01	< 0.005	0.20	0.06	< 0.005	< 0.005	0.06	0.06	< 0.005	0.02	0.02	—	190	190	< 0.005	0.03	0.19	198

Hauling	0.00	0.00	0.00	0.00	0.00	0.00	0.00	0.00	0.00	0.00	0.00	—	0.00	0.00	0.00	0.00	0.00	0.00
Annual	—	—	—	—	—	—	—	—	—	—	—	—	—	—	—	—	—	—
Worker	0.02	0.01	0.02	0.20	0.00	0.00	0.05	0.05	0.00	0.01	0.01	—	45.3	45.3	< 0.005	< 0.005	0.06	45.8
Vendor	< 0.005	< 0.005	0.04	0.01	< 0.005	< 0.005	0.01	0.01	< 0.005	< 0.005	< 0.005	—	31.4	31.4	< 0.005	< 0.005	0.03	32.9
Hauling	0.00	0.00	0.00	0.00	0.00	0.00	0.00	0.00	0.00	0.00	0.00	—	0.00	0.00	0.00	0.00	0.00	0.00

3.11. Building Construction (2029) - Unmitigated

Criteria Pollutants (lb/day for daily, ton/yr for annual) and GHGs (lb/day for daily, MT/yr for annual)

Location	TOG	ROG	NOx	CO	SO2	PM10E	PM10D	PM10T	PM2.5E	PM2.5D	PM2.5T	BCO2	NBCO2	CO2T	CH4	N2O	R	CO2e
Onsite	—	—	—	—	—	—	—	—	—	—	—	—	—	—	—	—	—	—
Daily, Summer (Max)	—	—	—	—	—	—	—	—	—	—	—	—	—	—	—	—	—	—
Off-Road Equipment	1.85	1.54	13.7	20.7	0.04	0.44	—	0.44	0.41	—	0.41	—	3,837	3,837	0.16	0.03	—	3,850
Onsite truck	0.00	0.00	0.00	0.00	0.00	0.00	0.00	0.00	0.00	0.00	0.00	—	0.00	0.00	0.00	0.00	0.00	0.00
Daily, Winter (Max)	—	—	—	—	—	—	—	—	—	—	—	—	—	—	—	—	—	—
Off-Road Equipment	1.85	1.54	13.7	20.7	0.04	0.44	—	0.44	0.41	—	0.41	—	3,837	3,837	0.16	0.03	—	3,850
Onsite truck	0.00	0.00	0.00	0.00	0.00	0.00	0.00	0.00	0.00	0.00	0.00	—	0.00	0.00	0.00	0.00	0.00	0.00
Average Daily	—	—	—	—	—	—	—	—	—	—	—	—	—	—	—	—	—	—
Off-Road Equipment	1.32	1.10	9.81	14.8	0.03	0.32	—	0.32	0.29	—	0.29	—	2,741	2,741	0.11	0.02	—	2,750

Onsite truck	0.00	0.00	0.00	0.00	0.00	0.00	0.00	0.00	0.00	0.00	0.00	—	0.00	0.00	0.00	0.00	0.00	0.00
Annual	—	—	—	—	—	—	—	—	—	—	—	—	—	—	—	—	—	—
Off-Road Equipment	0.24	0.20	1.79	2.69	< 0.005	0.06	—	0.06	0.05	—	0.05	—	454	454	0.02	< 0.005	—	455
Onsite truck	0.00	0.00	0.00	0.00	0.00	0.00	0.00	0.00	0.00	0.00	0.00	—	0.00	0.00	0.00	0.00	0.00	0.00
Offsite	—	—	—	—	—	—	—	—	—	—	—	—	—	—	—	—	—	—
Daily, Summer (Max)	—	—	—	—	—	—	—	—	—	—	—	—	—	—	—	—	—	—
Worker	0.17	0.17	0.14	2.67	0.00	0.00	0.60	0.60	0.00	0.14	0.14	—	601	601	0.01	0.02	1.55	609
Vendor	0.02	0.01	0.39	0.13	< 0.005	0.01	0.12	0.12	0.01	0.03	0.04	—	385	385	0.01	0.06	0.84	403
Hauling	0.00	0.00	0.00	0.00	0.00	0.00	0.00	0.00	0.00	0.00	0.00	—	0.00	0.00	0.00	0.00	0.00	0.00
Daily, Winter (Max)	—	—	—	—	—	—	—	—	—	—	—	—	—	—	—	—	—	—
Worker	0.16	0.14	0.16	2.00	0.00	0.00	0.60	0.60	0.00	0.14	0.14	—	553	553	0.01	0.02	0.04	560
Vendor	0.02	0.01	0.40	0.13	< 0.005	0.01	0.12	0.12	0.01	0.03	0.04	—	385	385	0.01	0.06	0.02	403
Hauling	0.00	0.00	0.00	0.00	0.00	0.00	0.00	0.00	0.00	0.00	0.00	—	0.00	0.00	0.00	0.00	0.00	0.00
Average Daily	—	—	—	—	—	—	—	—	—	—	—	—	—	—	—	—	—	—
Worker	0.12	0.10	0.11	1.51	0.00	0.00	0.43	0.43	0.00	0.10	0.10	—	400	400	0.01	0.02	0.48	405
Vendor	0.01	0.01	0.29	0.09	< 0.005	< 0.005	0.08	0.09	< 0.005	0.02	0.03	—	275	275	< 0.005	0.04	0.26	288
Hauling	0.00	0.00	0.00	0.00	0.00	0.00	0.00	0.00	0.00	0.00	0.00	—	0.00	0.00	0.00	0.00	0.00	0.00
Annual	—	—	—	—	—	—	—	—	—	—	—	—	—	—	—	—	—	—
Worker	0.02	0.02	0.02	0.28	0.00	0.00	0.08	0.08	0.00	0.02	0.02	—	66.2	66.2	< 0.005	< 0.005	0.08	67.1
Vendor	< 0.005	< 0.005	0.05	0.02	< 0.005	< 0.005	0.02	0.02	< 0.005	< 0.005	0.01	—	45.5	45.5	< 0.005	0.01	0.04	47.6
Hauling	0.00	0.00	0.00	0.00	0.00	0.00	0.00	0.00	0.00	0.00	0.00	—	0.00	0.00	0.00	0.00	0.00	0.00

3.13. Building Construction (2030) - Unmitigated

Criteria Pollutants (lb/day for daily, ton/yr for annual) and GHGs (lb/day for daily, MT/yr for annual)

Location	TOG	ROG	NOx	CO	SO2	PM10E	PM10D	PM10T	PM2.5E	PM2.5D	PM2.5T	BCO2	NBCO2	CO2T	CH4	N2O	R	CO2e
Onsite	—	—	—	—	—	—	—	—	—	—	—	—	—	—	—	—	—	—
Daily, Summer (Max)	—	—	—	—	—	—	—	—	—	—	—	—	—	—	—	—	—	—
Off-Road Equipment	1.80	1.51	13.4	20.6	0.04	0.42	—	0.42	0.38	—	0.38	—	3,837	3,837	0.16	0.03	—	3,850
Onsite truck	0.00	0.00	0.00	0.00	0.00	0.00	0.00	0.00	0.00	0.00	0.00	—	0.00	0.00	0.00	0.00	0.00	0.00
Daily, Winter (Max)	—	—	—	—	—	—	—	—	—	—	—	—	—	—	—	—	—	—
Off-Road Equipment	1.80	1.51	13.4	20.6	0.04	0.42	—	0.42	0.38	—	0.38	—	3,837	3,837	0.16	0.03	—	3,850
Onsite truck	0.00	0.00	0.00	0.00	0.00	0.00	0.00	0.00	0.00	0.00	0.00	—	0.00	0.00	0.00	0.00	0.00	0.00
Average Daily	—	—	—	—	—	—	—	—	—	—	—	—	—	—	—	—	—	—
Off-Road Equipment	1.25	1.04	9.31	14.3	0.03	0.29	—	0.29	0.27	—	0.27	—	2,658	2,658	0.11	0.02	—	2,667
Onsite truck	0.00	0.00	0.00	0.00	0.00	0.00	0.00	0.00	0.00	0.00	0.00	—	0.00	0.00	0.00	0.00	0.00	0.00
Annual	—	—	—	—	—	—	—	—	—	—	—	—	—	—	—	—	—	—
Off-Road Equipment	0.23	0.19	1.70	2.61	< 0.005	0.05	—	0.05	0.05	—	0.05	—	440	440	0.02	< 0.005	—	442

Onsite truck	0.00	0.00	0.00	0.00	0.00	0.00	0.00	0.00	0.00	0.00	0.00	—	0.00	0.00	0.00	0.00	0.00	0.00
Offsite	—	—	—	—	—	—	—	—	—	—	—	—	—	—	—	—	—	—
Daily, Summer (Max)	—	—	—	—	—	—	—	—	—	—	—	—	—	—	—	—	—	—
Worker	0.16	0.14	0.12	2.48	0.00	0.00	0.60	0.60	0.00	0.14	0.14	—	591	591	0.01	0.02	1.38	599
Vendor	0.02	0.01	0.37	0.12	< 0.005	0.01	0.12	0.12	0.01	0.03	0.04	—	374	374	0.01	0.06	0.74	392
Hauling	0.00	0.00	0.00	0.00	0.00	0.00	0.00	0.00	0.00	0.00	0.00	—	0.00	0.00	0.00	0.00	0.00	0.00
Daily, Winter (Max)	—	—	—	—	—	—	—	—	—	—	—	—	—	—	—	—	—	—
Worker	0.16	0.14	0.14	1.89	0.00	0.00	0.60	0.60	0.00	0.14	0.14	—	544	544	0.01	0.02	0.04	551
Vendor	0.02	0.01	0.39	0.13	< 0.005	0.01	0.12	0.12	0.01	0.03	0.04	—	374	374	0.01	0.06	0.02	391
Hauling	0.00	0.00	0.00	0.00	0.00	0.00	0.00	0.00	0.00	0.00	0.00	—	0.00	0.00	0.00	0.00	0.00	0.00
Average Daily	—	—	—	—	—	—	—	—	—	—	—	—	—	—	—	—	—	—
Worker	0.11	0.09	0.10	1.37	0.00	0.00	0.41	0.41	0.00	0.10	0.10	—	382	382	< 0.005	0.02	0.41	387
Vendor	0.01	0.01	0.27	0.09	< 0.005	< 0.005	0.08	0.08	< 0.005	0.02	0.03	—	259	259	< 0.005	0.04	0.22	271
Hauling	0.00	0.00	0.00	0.00	0.00	0.00	0.00	0.00	0.00	0.00	0.00	—	0.00	0.00	0.00	0.00	0.00	0.00
Annual	—	—	—	—	—	—	—	—	—	—	—	—	—	—	—	—	—	—
Worker	0.02	0.02	0.02	0.25	0.00	0.00	0.08	0.08	0.00	0.02	0.02	—	63.2	63.2	< 0.005	< 0.005	0.07	64.0
Vendor	< 0.005	< 0.005	0.05	0.02	< 0.005	< 0.005	0.01	0.02	< 0.005	< 0.005	< 0.005	—	42.9	42.9	< 0.005	0.01	0.04	44.9
Hauling	0.00	0.00	0.00	0.00	0.00	0.00	0.00	0.00	0.00	0.00	0.00	—	0.00	0.00	0.00	0.00	0.00	0.00

3.15. Paving (2028) - Unmitigated

Criteria Pollutants (lb/day for daily, ton/yr for annual) and GHGs (lb/day for daily, MT/yr for annual)

Location	TOG	ROG	NOx	CO	SO2	PM10E	PM10D	PM10T	PM2.5E	PM2.5D	PM2.5T	BCO2	NBCO2	CO2T	CH4	N2O	R	CO2e
Onsite	—	—	—	—	—	—	—	—	—	—	—	—	—	—	—	—	—	—

Daily, Summer (Max)	—	—	—	—	—	—	—	—	—	—	—	—	—	—	—	—	—	—
Off-Road Equipment	0.82	0.69	6.63	9.91	0.01	0.26	—	0.26	0.24	—	0.24	—	1,511	1,511	0.06	0.01	—	1,516
Paving	0.43	0.43	—	—	—	—	—	—	—	—	—	—	—	—	—	—	—	—
Onsite truck	0.00	0.00	0.00	0.00	0.00	0.00	0.00	0.00	0.00	0.00	0.00	—	0.00	0.00	0.00	0.00	0.00	0.00
Daily, Winter (Max)	—	—	—	—	—	—	—	—	—	—	—	—	—	—	—	—	—	—
Average Daily	—	—	—	—	—	—	—	—	—	—	—	—	—	—	—	—	—	—
Off-Road Equipment	0.17	0.14	1.36	2.04	< 0.005	0.05	—	0.05	0.05	—	0.05	—	310	310	0.01	< 0.005	—	312
Paving	0.09	0.09	—	—	—	—	—	—	—	—	—	—	—	—	—	—	—	—
Onsite truck	0.00	0.00	0.00	0.00	0.00	0.00	0.00	0.00	0.00	0.00	0.00	—	0.00	0.00	0.00	0.00	0.00	0.00
Annual	—	—	—	—	—	—	—	—	—	—	—	—	—	—	—	—	—	—
Off-Road Equipment	0.03	0.03	0.25	0.37	< 0.005	0.01	—	0.01	0.01	—	0.01	—	51.4	51.4	< 0.005	< 0.005	—	51.6
Paving	0.02	0.02	—	—	—	—	—	—	—	—	—	—	—	—	—	—	—	—
Onsite truck	0.00	0.00	0.00	0.00	0.00	0.00	0.00	0.00	0.00	0.00	0.00	—	0.00	0.00	0.00	0.00	0.00	0.00
Offsite	—	—	—	—	—	—	—	—	—	—	—	—	—	—	—	—	—	—
Daily, Summer (Max)	—	—	—	—	—	—	—	—	—	—	—	—	—	—	—	—	—	—
Worker	0.07	0.06	0.05	0.93	0.00	0.00	0.20	0.20	0.00	0.05	0.05	—	199	199	< 0.005	0.01	0.57	202

Vendor	0.07	0.03	1.57	0.51	0.01	0.02	0.34	0.37	0.02	0.10	0.12	—	1,252	1,252	0.03	0.20	2.22	1,315
Hauling	0.00	0.00	0.00	0.00	0.00	0.00	0.00	0.00	0.00	0.00	0.00	—	0.00	0.00	0.00	0.00	0.00	0.00
Daily, Winter (Max)	—	—	—	—	—	—	—	—	—	—	—	—	—	—	—	—	—	—
Average Daily	—	—	—	—	—	—	—	—	—	—	—	—	—	—	—	—	—	—
Worker	0.01	0.01	0.01	0.15	0.00	0.00	0.04	0.04	0.00	0.01	0.01	—	38.1	38.1	< 0.005	< 0.005	0.05	38.6
Vendor	0.02	0.01	0.34	0.11	< 0.005	0.01	0.07	0.07	0.01	0.02	0.02	—	257	257	0.01	0.04	0.20	270
Hauling	0.00	0.00	0.00	0.00	0.00	0.00	0.00	0.00	0.00	0.00	0.00	—	0.00	0.00	0.00	0.00	0.00	0.00
Annual	—	—	—	—	—	—	—	—	—	—	—	—	—	—	—	—	—	—
Worker	< 0.005	< 0.005	< 0.005	0.03	0.00	0.00	0.01	0.01	0.00	< 0.005	< 0.005	—	6.31	6.31	< 0.005	< 0.005	0.01	6.40
Vendor	< 0.005	< 0.005	0.06	0.02	< 0.005	< 0.005	0.01	0.01	< 0.005	< 0.005	< 0.005	—	42.6	42.6	< 0.005	0.01	0.03	44.7
Hauling	0.00	0.00	0.00	0.00	0.00	0.00	0.00	0.00	0.00	0.00	0.00	—	0.00	0.00	0.00	0.00	0.00	0.00

3.17. Architectural Coating (2028) - Unmitigated

Criteria Pollutants (lb/day for daily, ton/yr for annual) and GHGs (lb/day for daily, MT/yr for annual)

Location	TOG	ROG	NOx	CO	SO2	PM10E	PM10D	PM10T	PM2.5E	PM2.5D	PM2.5T	BCO2	NBCO2	CO2T	CH4	N2O	R	CO2e
Onsite	—	—	—	—	—	—	—	—	—	—	—	—	—	—	—	—	—	—
Daily, Summer (Max)	—	—	—	—	—	—	—	—	—	—	—	—	—	—	—	—	—	—
Off-Road Equipment	0.13	0.11	0.81	1.12	< 0.005	0.02	—	0.02	0.01	—	0.01	—	134	134	0.01	< 0.005	—	134
Architectural Coatings	33.5	33.5	—	—	—	—	—	—	—	—	—	—	—	—	—	—	—	—
Onsite truck	0.00	0.00	0.00	0.00	0.00	0.00	0.00	0.00	0.00	0.00	0.00	—	0.00	0.00	0.00	0.00	0.00	0.00

Daily, Winter (Max)	—	—	—	—	—	—	—	—	—	—	—	—	—	—	—	—	—	—
Average Daily	—	—	—	—	—	—	—	—	—	—	—	—	—	—	—	—	—	—
Off-Road Equipment	0.03	0.02	0.17	0.23	< 0.005	< 0.005	—	< 0.005	< 0.005	—	< 0.005	—	27.4	27.4	< 0.005	< 0.005	—	27.5
Architectural Coatings	6.88	6.88	—	—	—	—	—	—	—	—	—	—	—	—	—	—	—	—
Onsite truck	0.00	0.00	0.00	0.00	0.00	0.00	0.00	0.00	0.00	0.00	0.00	—	0.00	0.00	0.00	0.00	0.00	0.00
Annual	—	—	—	—	—	—	—	—	—	—	—	—	—	—	—	—	—	—
Off-Road Equipment	< 0.005	< 0.005	0.03	0.04	< 0.005	< 0.005	—	< 0.005	< 0.005	—	< 0.005	—	4.54	4.54	< 0.005	< 0.005	—	4.56
Architectural Coatings	1.26	1.26	—	—	—	—	—	—	—	—	—	—	—	—	—	—	—	—
Onsite truck	0.00	0.00	0.00	0.00	0.00	0.00	0.00	0.00	0.00	0.00	0.00	—	0.00	0.00	0.00	0.00	0.00	0.00
Offsite	—	—	—	—	—	—	—	—	—	—	—	—	—	—	—	—	—	—
Daily, Summer (Max)	—	—	—	—	—	—	—	—	—	—	—	—	—	—	—	—	—	—
Worker	0.04	0.04	0.03	0.57	0.00	0.00	0.12	0.12	0.00	0.03	0.03	—	122	122	< 0.005	< 0.005	0.35	124
Vendor	0.00	0.00	0.00	0.00	0.00	0.00	0.00	0.00	0.00	0.00	0.00	—	0.00	0.00	0.00	0.00	0.00	0.00
Hauling	0.00	0.00	0.00	0.00	0.00	0.00	0.00	0.00	0.00	0.00	0.00	—	0.00	0.00	0.00	0.00	0.00	0.00
Daily, Winter (Max)	—	—	—	—	—	—	—	—	—	—	—	—	—	—	—	—	—	—

Average Daily	—	—	—	—	—	—	—	—	—	—	—	—	—	—	—	—	—	—
Worker	0.01	0.01	0.01	0.09	0.00	0.00	0.02	0.02	0.00	0.01	0.01	—	23.4	23.4	< 0.005	< 0.005	0.03	23.7
Vendor	0.00	0.00	0.00	0.00	0.00	0.00	0.00	0.00	0.00	0.00	0.00	—	0.00	0.00	0.00	0.00	0.00	0.00
Hauling	0.00	0.00	0.00	0.00	0.00	0.00	0.00	0.00	0.00	0.00	0.00	—	0.00	0.00	0.00	0.00	0.00	0.00
Annual	—	—	—	—	—	—	—	—	—	—	—	—	—	—	—	—	—	—
Worker	< 0.005	< 0.005	< 0.005	0.02	0.00	0.00	< 0.005	< 0.005	0.00	< 0.005	< 0.005	—	3.88	3.88	< 0.005	< 0.005	0.01	3.93
Vendor	0.00	0.00	0.00	0.00	0.00	0.00	0.00	0.00	0.00	0.00	0.00	—	0.00	0.00	0.00	0.00	0.00	0.00
Hauling	0.00	0.00	0.00	0.00	0.00	0.00	0.00	0.00	0.00	0.00	0.00	—	0.00	0.00	0.00	0.00	0.00	0.00

4. Operations Emissions Details

4.1. Mobile Emissions by Land Use

4.1.1. Unmitigated

Criteria Pollutants (lb/day for daily, ton/yr for annual) and GHGs (lb/day for daily, MT/yr for annual)

Land Use	TOG	ROG	NOx	CO	SO2	PM10E	PM10D	PM10T	PM2.5E	PM2.5D	PM2.5T	BCO2	NBCO2	CO2T	CH4	N2O	R	CO2e
Daily, Summer (Max)	—	—	—	—	—	—	—	—	—	—	—	—	—	—	—	—	—	—
Single Family Housing	4.70	4.29	3.93	39.7	0.11	0.07	10.4	10.5	0.07	2.65	2.71	—	11,300	11,300	0.40	0.47	26.6	11,476
Other Asphalt Surfaces	0.00	0.00	0.00	0.00	0.00	0.00	0.00	0.00	0.00	0.00	0.00	—	0.00	0.00	0.00	0.00	0.00	0.00
Other Non-Asphalt Surfaces	0.00	0.00	0.00	0.00	0.00	0.00	0.00	0.00	0.00	0.00	0.00	—	0.00	0.00	0.00	0.00	0.00	0.00
City Park	0.00	0.00	0.00	0.00	0.00	0.00	0.00	0.00	0.00	0.00	0.00	—	0.00	0.00	0.00	0.00	0.00	0.00

Total	4.70	4.29	3.93	39.7	0.11	0.07	10.4	10.5	0.07	2.65	2.71	—	11,300	11,300	0.40	0.47	26.6	11,476
Daily, Winter (Max)	—	—	—	—	—	—	—	—	—	—	—	—	—	—	—	—	—	—
Single Family Housing	4.46	4.04	4.21	33.2	0.10	0.07	10.4	10.5	0.07	2.65	2.71	—	10,614	10,614	0.41	0.48	0.69	10,769
Other Asphalt Surfaces	0.00	0.00	0.00	0.00	0.00	0.00	0.00	0.00	0.00	0.00	0.00	—	0.00	0.00	0.00	0.00	0.00	0.00
Other Non-Asphalt Surfaces	0.00	0.00	0.00	0.00	0.00	0.00	0.00	0.00	0.00	0.00	0.00	—	0.00	0.00	0.00	0.00	0.00	0.00
City Park	0.00	0.00	0.00	0.00	0.00	0.00	0.00	0.00	0.00	0.00	0.00	—	0.00	0.00	0.00	0.00	0.00	0.00
Total	4.46	4.04	4.21	33.2	0.10	0.07	10.4	10.5	0.07	2.65	2.71	—	10,614	10,614	0.41	0.48	0.69	10,769
Annual	—	—	—	—	—	—	—	—	—	—	—	—	—	—	—	—	—	—
Single Family Housing	0.81	0.73	0.78	6.28	0.02	0.01	1.89	1.91	0.01	0.48	0.49	—	1,774	1,774	0.07	0.08	1.90	1,801
Other Asphalt Surfaces	0.00	0.00	0.00	0.00	0.00	0.00	0.00	0.00	0.00	0.00	0.00	—	0.00	0.00	0.00	0.00	0.00	0.00
Other Non-Asphalt Surfaces	0.00	0.00	0.00	0.00	0.00	0.00	0.00	0.00	0.00	0.00	0.00	—	0.00	0.00	0.00	0.00	0.00	0.00
City Park	0.00	0.00	0.00	0.00	0.00	0.00	0.00	0.00	0.00	0.00	0.00	—	0.00	0.00	0.00	0.00	0.00	0.00
Total	0.81	0.73	0.78	6.28	0.02	0.01	1.89	1.91	0.01	0.48	0.49	—	1,774	1,774	0.07	0.08	1.90	1,801

4.2. Energy

4.2.1. Electricity Emissions By Land Use - Unmitigated

Criteria Pollutants (lb/day for daily, ton/yr for annual) and GHGs (lb/day for daily, MT/yr for annual)

Land Use	TOG	ROG	NOx	CO	SO2	PM10E	PM10D	PM10T	PM2.5E	PM2.5D	PM2.5T	BCO2	NBCO2	CO2T	CH4	N2O	R	CO2e
Daily, Summer (Max)	—	—	—	—	—	—	—	—	—	—	—	—	—	—	—	—	—	—
Single Family Housing	—	—	—	—	—	—	—	—	—	—	—	—	1,742	1,742	0.11	0.01	—	1,749
Other Asphalt Surfaces	—	—	—	—	—	—	—	—	—	—	—	—	0.00	0.00	0.00	0.00	—	0.00
Other Non-Asphalt Surfaces	—	—	—	—	—	—	—	—	—	—	—	—	0.00	0.00	0.00	0.00	—	0.00
City Park	—	—	—	—	—	—	—	—	—	—	—	—	0.00	0.00	0.00	0.00	—	0.00
Total	—	—	—	—	—	—	—	—	—	—	—	—	1,742	1,742	0.11	0.01	—	1,749
Daily, Winter (Max)	—	—	—	—	—	—	—	—	—	—	—	—	—	—	—	—	—	—
Single Family Housing	—	—	—	—	—	—	—	—	—	—	—	—	1,742	1,742	0.11	0.01	—	1,749
Other Asphalt Surfaces	—	—	—	—	—	—	—	—	—	—	—	—	0.00	0.00	0.00	0.00	—	0.00
Other Non-Asphalt Surfaces	—	—	—	—	—	—	—	—	—	—	—	—	0.00	0.00	0.00	0.00	—	0.00
City Park	—	—	—	—	—	—	—	—	—	—	—	—	0.00	0.00	0.00	0.00	—	0.00
Total	—	—	—	—	—	—	—	—	—	—	—	—	1,742	1,742	0.11	0.01	—	1,749
Annual	—	—	—	—	—	—	—	—	—	—	—	—	—	—	—	—	—	—
Single Family Housing	—	—	—	—	—	—	—	—	—	—	—	—	288	288	0.02	< 0.005	—	290

Other Asphalt Surfaces	—	—	—	—	—	—	—	—	—	—	—	—	0.00	0.00	0.00	0.00	—	0.00
Other Non-Asphalt Surfaces	—	—	—	—	—	—	—	—	—	—	—	—	0.00	0.00	0.00	0.00	—	0.00
City Park	—	—	—	—	—	—	—	—	—	—	—	—	0.00	0.00	0.00	0.00	—	0.00
Total	—	—	—	—	—	—	—	—	—	—	—	—	288	288	0.02	< 0.005	—	290

4.2.3. Natural Gas Emissions By Land Use - Unmitigated

Criteria Pollutants (lb/day for daily, ton/yr for annual) and GHGs (lb/day for daily, MT/yr for annual)

Land Use	TOG	ROG	NOx	CO	SO2	PM10E	PM10D	PM10T	PM2.5E	PM2.5D	PM2.5T	BCO2	NBCO2	CO2T	CH4	N2O	R	CO2e
Daily, Summer (Max)	—	—	—	—	—	—	—	—	—	—	—	—	—	—	—	—	—	—
Single Family Housing	0.13	0.07	1.15	0.49	0.01	0.09	—	0.09	0.09	—	0.09	—	1,459	1,459	0.13	< 0.005	—	1,463
Other Asphalt Surfaces	0.00	0.00	0.00	0.00	0.00	0.00	—	0.00	0.00	—	0.00	—	0.00	0.00	0.00	0.00	—	0.00
Other Non-Asphalt Surfaces	0.00	0.00	0.00	0.00	0.00	0.00	—	0.00	0.00	—	0.00	—	0.00	0.00	0.00	0.00	—	0.00
City Park	0.00	0.00	0.00	0.00	0.00	0.00	—	0.00	0.00	—	0.00	—	0.00	0.00	0.00	0.00	—	0.00
Total	0.13	0.07	1.15	0.49	0.01	0.09	—	0.09	0.09	—	0.09	—	1,459	1,459	0.13	< 0.005	—	1,463
Daily, Winter (Max)	—	—	—	—	—	—	—	—	—	—	—	—	—	—	—	—	—	—
Single Family Housing	0.13	0.07	1.15	0.49	0.01	0.09	—	0.09	0.09	—	0.09	—	1,459	1,459	0.13	< 0.005	—	1,463

Other Asphalt Surfaces	0.00	0.00	0.00	0.00	0.00	0.00	—	0.00	0.00	—	0.00	—	0.00	0.00	0.00	0.00	—	0.00
Other Non-Asphalt Surfaces	0.00	0.00	0.00	0.00	0.00	0.00	—	0.00	0.00	—	0.00	—	0.00	0.00	0.00	0.00	—	0.00
City Park	0.00	0.00	0.00	0.00	0.00	0.00	—	0.00	0.00	—	0.00	—	0.00	0.00	0.00	0.00	—	0.00
Total	0.13	0.07	1.15	0.49	0.01	0.09	—	0.09	0.09	—	0.09	—	1,459	1,459	0.13	< 0.005	—	1,463
Annual	—	—	—	—	—	—	—	—	—	—	—	—	—	—	—	—	—	—
Single Family Housing	0.02	0.01	0.21	0.09	< 0.005	0.02	—	0.02	0.02	—	0.02	—	242	242	0.02	< 0.005	—	242
Other Asphalt Surfaces	0.00	0.00	0.00	0.00	0.00	0.00	—	0.00	0.00	—	0.00	—	0.00	0.00	0.00	0.00	—	0.00
Other Non-Asphalt Surfaces	0.00	0.00	0.00	0.00	0.00	0.00	—	0.00	0.00	—	0.00	—	0.00	0.00	0.00	0.00	—	0.00
City Park	0.00	0.00	0.00	0.00	0.00	0.00	—	0.00	0.00	—	0.00	—	0.00	0.00	0.00	0.00	—	0.00
Total	0.02	0.01	0.21	0.09	< 0.005	0.02	—	0.02	0.02	—	0.02	—	242	242	0.02	< 0.005	—	242

4.3. Area Emissions by Source

4.3.1. Unmitigated

Criteria Pollutants (lb/day for daily, ton/yr for annual) and GHGs (lb/day for daily, MT/yr for annual)

Source	TOG	ROG	NOx	CO	SO2	PM10E	PM10D	PM10T	PM2.5E	PM2.5D	PM2.5T	BCO2	NBCO2	CO2T	CH4	N2O	R	CO2e
Daily, Summer (Max)	—	—	—	—	—	—	—	—	—	—	—	—	—	—	—	—	—	—
Hearths	0.21	0.11	1.80	0.77	0.01	0.15	—	0.15	0.15	—	0.15	0.00	2,291	2,291	0.04	< 0.005	—	2,293

Consumer Product	8.05	8.05	—	—	—	—	—	—	—	—	—	—	—	—	—	—	—	—
Architectural Coatings	0.69	0.69	—	—	—	—	—	—	—	—	—	—	—	—	—	—	—	—
Landscape Equipment	0.66	0.63	0.07	7.29	< 0.005	< 0.005	—	< 0.005	< 0.005	—	< 0.005	—	19.4	19.4	< 0.005	< 0.005	—	19.5
Total	9.62	9.48	1.87	8.05	0.01	0.15	—	0.15	0.15	—	0.15	0.00	2,310	2,310	0.04	< 0.005	—	2,313
Daily, Winter (Max)	—	—	—	—	—	—	—	—	—	—	—	—	—	—	—	—	—	—
Hearths	0.21	0.11	1.80	0.77	0.01	0.15	—	0.15	0.15	—	0.15	0.00	2,291	2,291	0.04	< 0.005	—	2,293
Consumer Products	8.05	8.05	—	—	—	—	—	—	—	—	—	—	—	—	—	—	—	—
Architectural Coatings	0.69	0.69	—	—	—	—	—	—	—	—	—	—	—	—	—	—	—	—
Total	8.95	8.85	1.80	0.77	0.01	0.15	—	0.15	0.15	—	0.15	0.00	2,291	2,291	0.04	< 0.005	—	2,293
Annual	—	—	—	—	—	—	—	—	—	—	—	—	—	—	—	—	—	—
Hearths	< 0.005	< 0.005	0.02	0.01	< 0.005	< 0.005	—	< 0.005	< 0.005	—	< 0.005	0.00	26.0	26.0	< 0.005	< 0.005	—	26.0
Consumer Products	1.47	1.47	—	—	—	—	—	—	—	—	—	—	—	—	—	—	—	—
Architectural Coatings	0.13	0.13	—	—	—	—	—	—	—	—	—	—	—	—	—	—	—	—

Landscape Equipm	0.08	0.08	0.01	0.91	< 0.005	< 0.005	—	< 0.005	< 0.005	—	< 0.005	—	2.20	2.20	< 0.005	< 0.005	—	2.21
Total	1.68	1.68	0.03	0.92	< 0.005	< 0.005	—	< 0.005	< 0.005	—	< 0.005	0.00	28.2	28.2	< 0.005	< 0.005	—	28.2

4.4. Water Emissions by Land Use

4.4.1. Unmitigated

Criteria Pollutants (lb/day for daily, ton/yr for annual) and GHGs (lb/day for daily, MT/yr for annual)

Land Use	TOG	ROG	NOx	CO	SO2	PM10E	PM10D	PM10T	PM2.5E	PM2.5D	PM2.5T	BCO2	NBCO2	CO2T	CH4	N2O	R	CO2e
Daily, Summer (Max)	—	—	—	—	—	—	—	—	—	—	—	—	—	—	—	—	—	—
Single Family Housing	—	—	—	—	—	—	—	—	—	—	—	9.98	331	341	1.04	0.03	—	375
Other Asphalt Surfaces	—	—	—	—	—	—	—	—	—	—	—	0.00	0.00	0.00	0.00	0.00	—	0.00
Other Non-Asphalt Surfaces	—	—	—	—	—	—	—	—	—	—	—	0.00	0.00	0.00	0.00	0.00	—	0.00
City Park	—	—	—	—	—	—	—	—	—	—	—	0.00	0.00	0.00	0.00	0.00	—	0.00
Total	—	—	—	—	—	—	—	—	—	—	—	9.98	331	341	1.04	0.03	—	375
Daily, Winter (Max)	—	—	—	—	—	—	—	—	—	—	—	—	—	—	—	—	—	—
Single Family Housing	—	—	—	—	—	—	—	—	—	—	—	9.98	331	341	1.04	0.03	—	375
Other Asphalt Surfaces	—	—	—	—	—	—	—	—	—	—	—	0.00	0.00	0.00	0.00	0.00	—	0.00

Other Non-Asphalt Surfaces	—	—	—	—	—	—	—	—	—	—	—	0.00	0.00	0.00	0.00	0.00	—	0.00
City Park	—	—	—	—	—	—	—	—	—	—	—	0.00	0.00	0.00	0.00	0.00	—	0.00
Total	—	—	—	—	—	—	—	—	—	—	—	9.98	331	341	1.04	0.03	—	375
Annual	—	—	—	—	—	—	—	—	—	—	—	—	—	—	—	—	—	—
Single Family Housing	—	—	—	—	—	—	—	—	—	—	—	1.65	54.8	56.4	0.17	< 0.005	—	62.1
Other Asphalt Surfaces	—	—	—	—	—	—	—	—	—	—	—	0.00	0.00	0.00	0.00	0.00	—	0.00
Other Non-Asphalt Surfaces	—	—	—	—	—	—	—	—	—	—	—	0.00	0.00	0.00	0.00	0.00	—	0.00
City Park	—	—	—	—	—	—	—	—	—	—	—	0.00	0.00	0.00	0.00	0.00	—	0.00
Total	—	—	—	—	—	—	—	—	—	—	—	1.65	54.8	56.4	0.17	< 0.005	—	62.1

4.5. Waste Emissions by Land Use

4.5.1. Unmitigated

Criteria Pollutants (lb/day for daily, ton/yr for annual) and GHGs (lb/day for daily, MT/yr for annual)

Land Use	TOG	ROG	NOx	CO	SO2	PM10E	PM10D	PM10T	PM2.5E	PM2.5D	PM2.5T	BCO2	NBCO2	CO2T	CH4	N2O	R	CO2e
Daily, Summer (Max)	—	—	—	—	—	—	—	—	—	—	—	—	—	—	—	—	—	—
Single Family Housing	—	—	—	—	—	—	—	—	—	—	—	63.1	0.00	63.1	6.31	0.00	—	221
Other Asphalt Surfaces	—	—	—	—	—	—	—	—	—	—	—	0.00	0.00	0.00	0.00	0.00	—	0.00

Other Non-Asphalt Surfaces	—	—	—	—	—	—	—	—	—	—	—	0.00	0.00	0.00	0.00	0.00	—	0.00
City Park	—	—	—	—	—	—	—	—	—	—	—	0.08	0.00	0.08	0.01	0.00	—	0.29
Total	—	—	—	—	—	—	—	—	—	—	—	63.2	0.00	63.2	6.31	0.00	—	221
Daily, Winter (Max)	—	—	—	—	—	—	—	—	—	—	—	—	—	—	—	—	—	—
Single Family Housing	—	—	—	—	—	—	—	—	—	—	—	63.1	0.00	63.1	6.31	0.00	—	221
Other Asphalt Surfaces	—	—	—	—	—	—	—	—	—	—	—	0.00	0.00	0.00	0.00	0.00	—	0.00
Other Non-Asphalt Surfaces	—	—	—	—	—	—	—	—	—	—	—	0.00	0.00	0.00	0.00	0.00	—	0.00
City Park	—	—	—	—	—	—	—	—	—	—	—	0.08	0.00	0.08	0.01	0.00	—	0.29
Total	—	—	—	—	—	—	—	—	—	—	—	63.2	0.00	63.2	6.31	0.00	—	221
Annual	—	—	—	—	—	—	—	—	—	—	—	—	—	—	—	—	—	—
Single Family Housing	—	—	—	—	—	—	—	—	—	—	—	10.4	0.00	10.4	1.04	0.00	—	36.5
Other Asphalt Surfaces	—	—	—	—	—	—	—	—	—	—	—	0.00	0.00	0.00	0.00	0.00	—	0.00
Other Non-Asphalt Surfaces	—	—	—	—	—	—	—	—	—	—	—	0.00	0.00	0.00	0.00	0.00	—	0.00
City Park	—	—	—	—	—	—	—	—	—	—	—	0.01	0.00	0.01	< 0.005	0.00	—	0.05
Total	—	—	—	—	—	—	—	—	—	—	—	10.5	0.00	10.5	1.05	0.00	—	36.6

4.6. Refrigerant Emissions by Land Use

4.6.1. Unmitigated

Criteria Pollutants (lb/day for daily, ton/yr for annual) and GHGs (lb/day for daily, MT/yr for annual)

Land Use	TOG	ROG	NOx	CO	SO2	PM10E	PM10D	PM10T	PM2.5E	PM2.5D	PM2.5T	BCO2	NBCO2	CO2T	CH4	N2O	R	CO2e
Daily, Summer (Max)	—	—	—	—	—	—	—	—	—	—	—	—	—	—	—	—	—	—
Single Family Housing	—	—	—	—	—	—	—	—	—	—	—	—	—	—	—	—	2.68	2.68
City Park	—	—	—	—	—	—	—	—	—	—	—	—	—	—	—	—	0.00	0.00
Total	—	—	—	—	—	—	—	—	—	—	—	—	—	—	—	—	2.68	2.68
Daily, Winter (Max)	—	—	—	—	—	—	—	—	—	—	—	—	—	—	—	—	—	—
Single Family Housing	—	—	—	—	—	—	—	—	—	—	—	—	—	—	—	—	2.68	2.68
City Park	—	—	—	—	—	—	—	—	—	—	—	—	—	—	—	—	0.00	0.00
Total	—	—	—	—	—	—	—	—	—	—	—	—	—	—	—	—	2.68	2.68
Annual	—	—	—	—	—	—	—	—	—	—	—	—	—	—	—	—	—	—
Single Family Housing	—	—	—	—	—	—	—	—	—	—	—	—	—	—	—	—	0.44	0.44
City Park	—	—	—	—	—	—	—	—	—	—	—	—	—	—	—	—	0.00	0.00
Total	—	—	—	—	—	—	—	—	—	—	—	—	—	—	—	—	0.44	0.44

4.7. Offroad Emissions By Equipment Type

4.7.1. Unmitigated

Criteria Pollutants (lb/day for daily, ton/yr for annual) and GHGs (lb/day for daily, MT/yr for annual)

Equipment Type	TOG	ROG	NOx	CO	SO2	PM10E	PM10D	PM10T	PM2.5E	PM2.5D	PM2.5T	BCO2	NBCO2	CO2T	CH4	N2O	R	CO2e
Daily, Summer (Max)	—	—	—	—	—	—	—	—	—	—	—	—	—	—	—	—	—	—
Total	—	—	—	—	—	—	—	—	—	—	—	—	—	—	—	—	—	—
Daily, Winter (Max)	—	—	—	—	—	—	—	—	—	—	—	—	—	—	—	—	—	—
Total	—	—	—	—	—	—	—	—	—	—	—	—	—	—	—	—	—	—
Annual	—	—	—	—	—	—	—	—	—	—	—	—	—	—	—	—	—	—
Total	—	—	—	—	—	—	—	—	—	—	—	—	—	—	—	—	—	—

4.8. Stationary Emissions By Equipment Type

4.8.1. Unmitigated

Criteria Pollutants (lb/day for daily, ton/yr for annual) and GHGs (lb/day for daily, MT/yr for annual)

Equipment Type	TOG	ROG	NOx	CO	SO2	PM10E	PM10D	PM10T	PM2.5E	PM2.5D	PM2.5T	BCO2	NBCO2	CO2T	CH4	N2O	R	CO2e
Daily, Summer (Max)	—	—	—	—	—	—	—	—	—	—	—	—	—	—	—	—	—	—
Total	—	—	—	—	—	—	—	—	—	—	—	—	—	—	—	—	—	—
Daily, Winter (Max)	—	—	—	—	—	—	—	—	—	—	—	—	—	—	—	—	—	—
Total	—	—	—	—	—	—	—	—	—	—	—	—	—	—	—	—	—	—
Annual	—	—	—	—	—	—	—	—	—	—	—	—	—	—	—	—	—	—

Total	—	—	—	—	—	—	—	—	—	—	—	—	—	—	—	—	—	—

4.9. User Defined Emissions By Equipment Type

4.9.1. Unmitigated

Criteria Pollutants (lb/day for daily, ton/yr for annual) and GHGs (lb/day for daily, MT/yr for annual)

Equipment Type	TOG	ROG	NOx	CO	SO2	PM10E	PM10D	PM10T	PM2.5E	PM2.5D	PM2.5T	BCO2	NBCO2	CO2T	CH4	N2O	R	CO2e
Daily, Summer (Max)	—	—	—	—	—	—	—	—	—	—	—	—	—	—	—	—	—	—
Total	—	—	—	—	—	—	—	—	—	—	—	—	—	—	—	—	—	—
Daily, Winter (Max)	—	—	—	—	—	—	—	—	—	—	—	—	—	—	—	—	—	—
Total	—	—	—	—	—	—	—	—	—	—	—	—	—	—	—	—	—	—
Annual	—	—	—	—	—	—	—	—	—	—	—	—	—	—	—	—	—	—
Total	—	—	—	—	—	—	—	—	—	—	—	—	—	—	—	—	—	—

4.10. Soil Carbon Accumulation By Vegetation Type

4.10.1. Soil Carbon Accumulation By Vegetation Type - Unmitigated

Criteria Pollutants (lb/day for daily, ton/yr for annual) and GHGs (lb/day for daily, MT/yr for annual)

Vegetation	TOG	ROG	NOx	CO	SO2	PM10E	PM10D	PM10T	PM2.5E	PM2.5D	PM2.5T	BCO2	NBCO2	CO2T	CH4	N2O	R	CO2e
Daily, Summer (Max)	—	—	—	—	—	—	—	—	—	—	—	—	—	—	—	—	—	—
Total	—	—	—	—	—	—	—	—	—	—	—	—	—	—	—	—	—	—
Daily, Winter (Max)	—	—	—	—	—	—	—	—	—	—	—	—	—	—	—	—	—	—

Total	—	—	—	—	—	—	—	—	—	—	—	—	—	—	—	—	—	—
Annual	—	—	—	—	—	—	—	—	—	—	—	—	—	—	—	—	—	—
Total	—	—	—	—	—	—	—	—	—	—	—	—	—	—	—	—	—	—

4.10.2. Above and Belowground Carbon Accumulation by Land Use Type - Unmitigated

Criteria Pollutants (lb/day for daily, ton/yr for annual) and GHGs (lb/day for daily, MT/yr for annual)

Land Use	TOG	ROG	NOx	CO	SO2	PM10E	PM10D	PM10T	PM2.5E	PM2.5D	PM2.5T	BCO2	NBCO2	CO2T	CH4	N2O	R	CO2e
Daily, Summer (Max)	—	—	—	—	—	—	—	—	—	—	—	—	—	—	—	—	—	—
Total	—	—	—	—	—	—	—	—	—	—	—	—	—	—	—	—	—	—
Daily, Winter (Max)	—	—	—	—	—	—	—	—	—	—	—	—	—	—	—	—	—	—
Total	—	—	—	—	—	—	—	—	—	—	—	—	—	—	—	—	—	—
Annual	—	—	—	—	—	—	—	—	—	—	—	—	—	—	—	—	—	—
Total	—	—	—	—	—	—	—	—	—	—	—	—	—	—	—	—	—	—

4.10.3. Avoided and Sequestered Emissions by Species - Unmitigated

Criteria Pollutants (lb/day for daily, ton/yr for annual) and GHGs (lb/day for daily, MT/yr for annual)

Species	TOG	ROG	NOx	CO	SO2	PM10E	PM10D	PM10T	PM2.5E	PM2.5D	PM2.5T	BCO2	NBCO2	CO2T	CH4	N2O	R	CO2e
Daily, Summer (Max)	—	—	—	—	—	—	—	—	—	—	—	—	—	—	—	—	—	—
Avoided	—	—	—	—	—	—	—	—	—	—	—	—	—	—	—	—	—	—
Subtotal	—	—	—	—	—	—	—	—	—	—	—	—	—	—	—	—	—	—
Sequestered	—	—	—	—	—	—	—	—	—	—	—	—	—	—	—	—	—	—
Subtotal	—	—	—	—	—	—	—	—	—	—	—	—	—	—	—	—	—	—

Removed	—	—	—	—	—	—	—	—	—	—	—	—	—	—	—	—	—	—
Subtotal	—	—	—	—	—	—	—	—	—	—	—	—	—	—	—	—	—	—
—	—	—	—	—	—	—	—	—	—	—	—	—	—	—	—	—	—	—
Daily, Winter (Max)	—	—	—	—	—	—	—	—	—	—	—	—	—	—	—	—	—	—
Avoided	—	—	—	—	—	—	—	—	—	—	—	—	—	—	—	—	—	—
Subtotal	—	—	—	—	—	—	—	—	—	—	—	—	—	—	—	—	—	—
Sequestered	—	—	—	—	—	—	—	—	—	—	—	—	—	—	—	—	—	—
Subtotal	—	—	—	—	—	—	—	—	—	—	—	—	—	—	—	—	—	—
Removed	—	—	—	—	—	—	—	—	—	—	—	—	—	—	—	—	—	—
Subtotal	—	—	—	—	—	—	—	—	—	—	—	—	—	—	—	—	—	—
—	—	—	—	—	—	—	—	—	—	—	—	—	—	—	—	—	—	—
Annual	—	—	—	—	—	—	—	—	—	—	—	—	—	—	—	—	—	—
Avoided	—	—	—	—	—	—	—	—	—	—	—	—	—	—	—	—	—	—
Subtotal	—	—	—	—	—	—	—	—	—	—	—	—	—	—	—	—	—	—
Sequestered	—	—	—	—	—	—	—	—	—	—	—	—	—	—	—	—	—	—
Subtotal	—	—	—	—	—	—	—	—	—	—	—	—	—	—	—	—	—	—
Removed	—	—	—	—	—	—	—	—	—	—	—	—	—	—	—	—	—	—
Subtotal	—	—	—	—	—	—	—	—	—	—	—	—	—	—	—	—	—	—
—	—	—	—	—	—	—	—	—	—	—	—	—	—	—	—	—	—	—

5. Activity Data

5.1. Construction Schedule

Phase Name	Phase Type	Start Date	End Date	Days Per Week	Work Days per Phase	Phase Description
Demolition	Demolition	1/4/2027	4/9/2027	5.00	70.0	—
Site Preparation	Site Preparation	4/12/2027	5/21/2027	5.00	30.0	—
Grading	Grading	5/24/2027	4/28/2028	5.00	245	—
Building Construction	Building Construction	5/1/2028	12/20/2030	5.00	690	—
Paving	Paving	6/5/2028	9/15/2028	5.00	75.0	—
Architectural Coating	Architectural Coating	5/1/2028	8/11/2028	5.00	75.0	—

5.2. Off-Road Equipment

5.2.1. Unmitigated

Phase Name	Equipment Type	Fuel Type	Engine Tier	Number per Day	Hours Per Day	Horsepower	Load Factor
Demolition	Concrete/Industrial Saws	Diesel	Average	1.00	8.00	33.0	0.73
Demolition	Excavators	Diesel	Average	3.00	8.00	36.0	0.38
Demolition	Rubber Tired Dozers	Diesel	Average	2.00	8.00	367	0.40
Site Preparation	Rubber Tired Dozers	Diesel	Average	4.00	8.00	367	0.40
Site Preparation	Tractors/Loaders/Backhoes	Diesel	Average	5.00	8.50	84.0	0.37
Grading	Excavators	Diesel	Average	2.00	3.60	36.0	0.38
Grading	Graders	Diesel	Average	1.00	3.60	148	0.41
Grading	Rubber Tired Dozers	Diesel	Average	1.00	3.60	367	0.40
Grading	Scrapers	Diesel	Average	2.00	3.60	423	0.48
Grading	Tractors/Loaders/Backhoes	Diesel	Average	2.00	3.60	84.0	0.37
Building Construction	Cranes	Diesel	Average	2.00	5.60	367	0.29
Building Construction	Forklifts	Diesel	Average	5.00	7.70	82.0	0.20
Building Construction	Generator Sets	Diesel	Average	2.00	6.40	14.0	0.74
Building Construction	Tractors/Loaders/Backhoes	Diesel	Average	4.00	8.40	84.0	0.37

Building Construction	Welders	Diesel	Average	2.00	6.40	46.0	0.45
Paving	Pavers	Diesel	Average	2.00	8.00	81.0	0.42
Paving	Paving Equipment	Diesel	Average	2.00	8.00	89.0	0.36
Paving	Rollers	Diesel	Average	2.00	8.00	36.0	0.38
Architectural Coating	Air Compressors	Diesel	Average	1.00	6.00	37.0	0.48

5.3. Construction Vehicles

5.3.1. Unmitigated

Phase Name	Trip Type	One-Way Trips per Day	Miles per Trip	Vehicle Mix
Demolition	—	—	—	—
Demolition	Worker	15.0	18.5	LDA,LDT1,LDT2
Demolition	Vendor	—	10.2	HHDT,MHDT
Demolition	Hauling	36.4	20.0	HHDT
Demolition	Onsite truck	—	—	HHDT
Site Preparation	—	—	—	—
Site Preparation	Worker	22.5	18.5	LDA,LDT1,LDT2
Site Preparation	Vendor	—	10.2	HHDT,MHDT
Site Preparation	Hauling	0.00	20.0	HHDT
Site Preparation	Onsite truck	—	—	HHDT
Grading	—	—	—	—
Grading	Worker	20.0	18.5	LDA,LDT1,LDT2
Grading	Vendor	—	10.2	HHDT,MHDT
Grading	Hauling	35.3	20.0	HHDT
Grading	Onsite truck	—	—	HHDT
Building Construction	—	—	—	—
Building Construction	Worker	46.1	18.5	LDA,LDT1,LDT2
Building Construction	Vendor	13.7	10.2	HHDT,MHDT

Building Construction	Hauling	0.00	20.0	HHDT
Building Construction	Onsite truck	—	—	HHDT
Paving	—	—	—	—
Paving	Worker	15.0	18.5	LDA,LDT1,LDT2
Paving	Vendor	37.0	10.2	HHDT
Paving	Hauling	0.00	20.0	HHDT
Paving	Onsite truck	—	—	HHDT
Architectural Coating	—	—	—	—
Architectural Coating	Worker	9.22	18.5	LDA,LDT1,LDT2
Architectural Coating	Vendor	—	10.2	HHDT,MHDT
Architectural Coating	Hauling	0.00	20.0	HHDT
Architectural Coating	Onsite truck	—	—	HHDT

5.4. Vehicles

5.4.1. Construction Vehicle Control Strategies

Non-applicable. No control strategies activated by user.

5.5. Architectural Coatings

Phase Name	Residential Interior Area Coated (sq ft)	Residential Exterior Area Coated (sq ft)	Non-Residential Interior Area Coated (sq ft)	Non-Residential Exterior Area Coated (sq ft)	Parking Area Coated (sq ft)
Architectural Coating	757,553	252,518	0.00	0.00	36,773

5.6. Dust Mitigation

5.6.1. Construction Earthmoving Activities

Phase Name	Material Imported (Cubic Yards)	Material Exported (Cubic Yards)	Acres Graded (acres)	Material Demolished (Ton of Debris)	Acres Paved (acres)
Demolition	0.00	0.00	0.00	10,200	—

Site Preparation	0.00	0.00	60.0	0.00	—
Grading	0.00	69,266	331	0.00	—
Paving	0.00	0.00	0.00	0.00	15.5

5.6.2. Construction Earthmoving Control Strategies

Non-applicable. No control strategies activated by user.

5.7. Construction Paving

Land Use	Area Paved (acres)	% Asphalt
Single Family Housing	1.41	0%
Other Asphalt Surfaces	12.3	100%
Other Non-Asphalt Surfaces	1.05	0%
City Park	0.00	0%
Other Non-Asphalt Surfaces	0.74	0%

5.8. Construction Electricity Consumption and Emissions Factors

kWh per Year and Emission Factor (lb/MWh)

Year	kWh per Year	CO2	CH4	N2O
2027	0.00	532	0.03	< 0.005
2028	0.00	532	0.03	< 0.005
2029	0.00	532	0.03	< 0.005
2030	0.00	532	0.03	< 0.005

5.9. Operational Mobile Sources

5.9.1. Unmitigated

Land Use Type	Trips/Weekday	Trips/Saturday	Trips/Sunday	Trips/Year	VMT/Weekday	VMT/Saturday	VMT/Sunday	VMT/Year

Single Family Housing	1,207	1,207	1,207	440,570	14,731	14,731	14,731	5,376,688
Other Asphalt Surfaces	0.00	0.00	0.00	0.00	0.00	0.00	0.00	0.00
Other Non-Asphalt Surfaces	0.00	0.00	0.00	0.00	0.00	0.00	0.00	0.00
City Park	0.00	0.00	0.00	0.00	0.00	0.00	0.00	0.00
Other Non-Asphalt Surfaces	0.00	0.00	0.00	0.00	0.00	0.00	0.00	0.00

5.10. Operational Area Sources

5.10.1. Hearths

5.10.1.1. Unmitigated

Hearth Type	Unmitigated (number)
Single Family Housing	—
Wood Fireplaces	0
Gas Fireplaces	109
Propane Fireplaces	0
Electric Fireplaces	0
No Fireplaces	13
Conventional Wood Stoves	0
Catalytic Wood Stoves	6
Non-Catalytic Wood Stoves	6
Pellet Wood Stoves	0

5.10.2. Architectural Coatings

Residential Interior Area Coated (sq ft)	Residential Exterior Area Coated (sq ft)	Non-Residential Interior Area Coated (sq ft)	Non-Residential Exterior Area Coated (sq ft)	Parking Area Coated (sq ft)

757552.5	252,518	0.00	0.00	36,773

5.10.3. Landscape Equipment

Season	Unit	Value
Snow Days	day/yr	0.00
Summer Days	day/yr	250

5.11. Operational Energy Consumption

5.11.1. Unmitigated

Electricity (kWh/yr) and CO2 and CH4 and N2O and Natural Gas (kBTU/yr)

Land Use	Electricity (kWh/yr)	CO2	CH4	N2O	Natural Gas (kBTU/yr)
Single Family Housing	1,195,423	532	0.0330	0.0040	4,552,232
Other Asphalt Surfaces	0.00	532	0.0330	0.0040	0.00
Other Non-Asphalt Surfaces	0.00	532	0.0330	0.0040	0.00
City Park	0.00	532	0.0330	0.0040	0.00
Other Non-Asphalt Surfaces	0.00	532	0.0330	0.0040	0.00

5.12. Operational Water and Wastewater Consumption

5.12.1. Unmitigated

Land Use	Indoor Water (gal/year)	Outdoor Water (gal/year)
Single Family Housing	5,206,243	36,102,790
Other Asphalt Surfaces	0.00	0.00
Other Non-Asphalt Surfaces	0.00	0.00
City Park	0.00	0.00
Other Non-Asphalt Surfaces	0.00	0.00

5.13. Operational Waste Generation

5.13.1. Unmitigated

Land Use	Waste (ton/year)	Cogeneration (kWh/year)
Single Family Housing	117	—
Other Asphalt Surfaces	0.00	—
Other Non-Asphalt Surfaces	0.00	—
City Park	0.15	—
Other Non-Asphalt Surfaces	0.00	—

5.14. Operational Refrigeration and Air Conditioning Equipment

5.14.1. Unmitigated

Land Use Type	Equipment Type	Refrigerant	GWP	Quantity (kg)	Operations Leak Rate	Service Leak Rate	Times Serviced
Single Family Housing	Average room A/C & Other residential A/C and heat pumps	R-410A	2,088	< 0.005	2.50	2.50	10.0
Single Family Housing	Household refrigerators and/or freezers	R-134a	1,430	0.12	0.60	0.00	1.00
City Park	Other commercial A/C and heat pumps	R-410A	2,088	< 0.005	4.00	4.00	18.0
City Park	Stand-alone retail refrigerators and freezers	R-134a	1,430	0.04	1.00	0.00	1.00

5.15. Operational Off-Road Equipment

5.15.1. Unmitigated

Equipment Type	Fuel Type	Engine Tier	Number per Day	Hours Per Day	Horsepower	Load Factor

5.16. Stationary Sources

5.16.1. Emergency Generators and Fire Pumps

Equipment Type	Fuel Type	Number per Day	Hours per Day	Hours per Year	Horsepower	Load Factor

5.16.2. Process Boilers

Equipment Type	Fuel Type	Number	Boiler Rating (MMBtu/hr)	Daily Heat Input (MMBtu/day)	Annual Heat Input (MMBtu/yr)

5.17. User Defined

Equipment Type	Fuel Type

5.18. Vegetation

5.18.1. Land Use Change

5.18.1.1. Unmitigated

Vegetation Land Use Type	Vegetation Soil Type	Initial Acres	Final Acres

5.18.1. Biomass Cover Type

5.18.1.1. Unmitigated

Biomass Cover Type	Initial Acres	Final Acres

5.18.2. Sequestration

5.18.2.1. Unmitigated

Tree Type	Number	Electricity Saved (kWh/year)	Natural Gas Saved (btu/year)

6. Climate Risk Detailed Report

6.1. Climate Risk Summary

Cal-Adapt midcentury 2040–2059 average projections for four hazards are reported below for your project location. These are under Representation Concentration Pathway (RCP) 8.5 which assumes GHG emissions will continue to rise strongly through 2050 and then plateau around 2100.

Climate Hazard	Result for Project Location	Unit
Temperature and Extreme Heat	27.2	annual days of extreme heat
Extreme Precipitation	1.80	annual days with precipitation above 20 mm
Sea Level Rise	—	meters of inundation depth
Wildfire	19.0	annual hectares burned

Temperature and Extreme Heat data are for grid cell in which your project are located. The projection is based on the 98th historical percentile of daily maximum/minimum temperatures from observed historical data (32 climate model ensemble from Cal-Adapt, 2040–2059 average under RCP 8.5). Each grid cell is 6 kilometers (km) by 6 km, or 3.7 miles (mi) by 3.7 mi.
Extreme Precipitation data are for the grid cell in which your project are located. The threshold of 20 mm is equivalent to about ¾ an inch of rain, which would be light to moderate rainfall if received over a full day or heavy rain if received over a period of 2 to 4 hours. Each grid cell is 6 kilometers (km) by 6 km, or 3.7 miles (mi) by 3.7 mi.
Sea Level Rise data are for the grid cell in which your project are located. The projections are from Radke et al. (2017), as reported in Cal-Adapt (Radke et al., 2017, CEC-500-2017-008), and consider inundation location and depth for the San Francisco Bay, the Sacramento-San Joaquin River Delta and California coast resulting different increments of sea level rise coupled with extreme storm events. Users may select from four scenarios to view the range in potential inundation depth for the grid cell. The four scenarios are: No rise, 0.5 meter, 1.0 meter, 1.41 meters
Wildfire data are for the grid cell in which your project are located. The projections are from UC Davis, as reported in Cal-Adapt (2040–2059 average under RCP 8.5), and consider historical data of climate, vegetation, population density, and large (> 400 ha) fire history. Users may select from four model simulations to view the range in potential wildfire probabilities for the grid cell. The four simulations make different assumptions about expected rainfall and temperature are: Warmer/drier (HadGEM2-ES), Cooler/wetter (CNRM-CM5), Average conditions (CanESM2), Range of different rainfall and temperature possibilities (MIROC5). Each grid cell is 6 kilometers (km) by 6 km, or 3.7 miles (mi) by 3.7 mi.

6.2. Initial Climate Risk Scores

Climate Hazard	Exposure Score	Sensitivity Score	Adaptive Capacity Score	Vulnerability Score
Temperature and Extreme Heat	3	0	0	N/A
Extreme Precipitation	N/A	N/A	N/A	N/A
Sea Level Rise	1	0	0	N/A
Wildfire	1	0	0	N/A
Flooding	N/A	N/A	N/A	N/A
Drought	N/A	N/A	N/A	N/A
Snowpack Reduction	N/A	N/A	N/A	N/A
Air Quality Degradation	0	0	0	N/A

The sensitivity score reflects the extent to which a project would be adversely affected by exposure to a climate hazard. Exposure is rated on a scale of 1 to 5, with a score of 5 representing the greatest exposure.
The adaptive capacity of a project refers to its ability to manage and reduce vulnerabilities from projected climate hazards. Adaptive capacity is rated on a scale of 1 to 5, with a score of 5 representing the greatest ability to adapt.
The overall vulnerability scores are calculated based on the potential impacts and adaptive capacity assessments for each hazard. Scores do not include implementation of climate risk reduction measures.

6.3. Adjusted Climate Risk Scores

Climate Hazard	Exposure Score	Sensitivity Score	Adaptive Capacity Score	Vulnerability Score
Temperature and Extreme Heat	3	1	1	3
Extreme Precipitation	N/A	N/A	N/A	N/A
Sea Level Rise	1	1	1	2
Wildfire	1	1	1	2
Flooding	N/A	N/A	N/A	N/A
Drought	N/A	N/A	N/A	N/A
Snowpack Reduction	N/A	N/A	N/A	N/A
Air Quality Degradation	1	1	1	2

The sensitivity score reflects the extent to which a project would be adversely affected by exposure to a climate hazard. Exposure is rated on a scale of 1 to 5, with a score of 5 representing the greatest exposure.
The adaptive capacity of a project refers to its ability to manage and reduce vulnerabilities from projected climate hazards. Adaptive capacity is rated on a scale of 1 to 5, with a score of 5 representing the greatest ability to adapt.
The overall vulnerability scores are calculated based on the potential impacts and adaptive capacity assessments for each hazard. Scores include implementation of climate risk reduction measures.

7. Health and Equity Details

7.1. CalEnviroScreen 4.0 Scores

The maximum CalEnviroScreen score is 100. A high score (i.e., greater than 50) reflects a higher pollution burden compared to other census tracts in the state.

Indicator	Result for Project Census Tract
Exposure Indicators	—
AQ-Ozone	91.1
AQ-PM	67.9
AQ-DPM	8.08

Drinking Water	76.1
Lead Risk Housing	2.41
Pesticides	18.2
Toxic Releases	58.2
Traffic	16.6
Effect Indicators	—
CleanUp Sites	37.6
Groundwater	30.9
Haz Waste Facilities/Generators	16.6
Impaired Water Bodies	0.00
Solid Waste	23.0
Sensitive Population	—
Asthma	43.7
Cardio-vascular	52.3
Low Birth Weights	15.5
Socioeconomic Factor Indicators	—
Education	30.0
Housing	14.7
Linguistic	2.81
Poverty	12.2
Unemployment	7.14

7.2. Healthy Places Index Scores

The maximum Health Places Index score is 100. A high score (i.e., greater than 50) reflects healthier community conditions compared to other census tracts in the state.

Indicator	Result for Project Census Tract
Economic	—
Above Poverty	77.55678173
Employed	38.00846914

Median HI	85.12767869
Education	—
Bachelor's or higher	34.23585269
High school enrollment	26.43397921
Preschool enrollment	8.17400231
Transportation	—
Auto Access	73.42486847
Active commuting	15.02630566
Social	—
2-parent households	65.73848325
Voting	49.13383806
Neighborhood	—
Alcohol availability	93.71230592
Park access	9.303220839
Retail density	5.979725395
Supermarket access	2.399589375
Tree canopy	8.225330425
Housing	—
Homeownership	97.06146542
Housing habitability	91.50519697
Low-inc homeowner severe housing cost burden	85.15334274
Low-inc renter severe housing cost burden	50.78916977
Uncrowded housing	87.19363531
Health Outcomes	—
Insured adults	74.51559091
Arthritis	0.0
Asthma ER Admissions	54.9
High Blood Pressure	0.0

Cancer (excluding skin)	0.0
Asthma	0.0
Coronary Heart Disease	0.0
Chronic Obstructive Pulmonary Disease	0.0
Diagnosed Diabetes	0.0
Life Expectancy at Birth	38.4
Cognitively Disabled	4.9
Physically Disabled	41.1
Heart Attack ER Admissions	48.4
Mental Health Not Good	0.0
Chronic Kidney Disease	0.0
Obesity	0.0
Pedestrian Injuries	70.9
Physical Health Not Good	0.0
Stroke	0.0
Health Risk Behaviors	—
Binge Drinking	0.0
Current Smoker	0.0
No Leisure Time for Physical Activity	0.0
Climate Change Exposures	—
Wildfire Risk	33.4
SLR Inundation Area	0.0
Children	72.4
Elderly	47.3
English Speaking	61.7
Foreign-born	17.2
Outdoor Workers	43.1
Climate Change Adaptive Capacity	—

Impervious Surface Cover	93.8
Traffic Density	13.4
Traffic Access	23.0
Other Indices	—
Hardship	33.6
Other Decision Support	—
2016 Voting	64.2

7.3. Overall Health & Equity Scores

Metric	Result for Project Census Tract
CalEnviroScreen 4.0 Score for Project Location (a)	16.0
Healthy Places Index Score for Project Location (b)	55.0
Project Located in a Designated Disadvantaged Community (Senate Bill 535)	No
Project Located in a Low-Income Community (Assembly Bill 1550)	No
Project Located in a Community Air Protection Program Community (Assembly Bill 617)	No

a: The maximum CalEnviroScreen score is 100. A high score (i.e., greater than 50) reflects a higher pollution burden compared to other census tracts in the state.
b: The maximum Health Places Index score is 100. A high score (i.e., greater than 50) reflects healthier community conditions compared to other census tracts in the state.

7.4. Health & Equity Measures

No Health & Equity Measures selected.

7.5. Evaluation Scorecard

Health & Equity Evaluation Scorecard not completed.

7.6. Health & Equity Custom Measures

No Health & Equity Custom Measures created.

8. User Changes to Default Data

Screen	Justification
Land Use	land use information based on site plan and applicant-provided information

Construction: Construction Phases	schedule based on applicant provided information
Construction: Off-Road Equipment	equipment based on applicant provided information
Construction: Architectural Coatings	architectural coatings based on applicant provided information
Operations: Hearths	per SCAQMD rule 445 - wood burning devices
Operations: Vehicle Data	updated per trip generation summary for the project.

URBAN | CROSSROADS

HIGHLAND GROVE TTM NO. 38910

TRAFFIC ANALYSIS

PREPARED BY: Charlene So | cso@urbanxroads.com
Jared Brawner | jbrawner@urbanxroads.com
Aric Evatt | aevatt@urbanxroads.com

Reference Number	Agency	Date
15858-03 TA Report	County of Riverside	August 15, 2024

TABLE OF CONTENTS

Table of Contents ii

Appendices iv

List of Exhibits v

List of Tables vi

List of Abbreviated Terms vii

1 Summary of Findings 1

1.1 Project Overview 3
1.2 Analysis Scenarios 5
1.3 Study Area 6
1.4 General Plan Consistency Requirements for Intersections 8
1.5 Recommendations 9
1.6 Queuing Analysis 12

2 Methodologies 15

2.1 Level of Service 15
2.2 Intersection Capacity Analysis 15
2.3 Traffic Signal Warrant Analysis Methodology 17
2.4 Queuing Analysis 18
2.5 Minimum Acceptable Levels of Service (LOS) 19
2.6 Deficiency Criteria 20
2.7 Project Fair Share Calculation Methodology 20

3 Area Conditions 21

3.1 Existing Circulation Network 21
3.2 County of Riverside General Plan Circulation Element 21
3.3 City of Riverside General Plan Circulation Element 21
3.4 Bicycle & Pedestrian Facilities 26
3.5 Transit Service 26
3.6 Existing (2024) Traffic Counts 26
3.7 Intersection Operations Analysis 32
3.8 Traffic Signal Warrants Analysis 32
3.9 Queuing Analysis 33
3.10 Project Deficiencies and Recommended Improvements 35

4 Projected Future Traffic 37

4.1 Project Trip Generation 37
4.2 Project Trip Distribution 38

4.3 Modal Split 38
4.4 Project Trip Assignment 38
4.5 Background Traffic 38
4.6 Cumulative Development Traffic 41
5 EAP (2030) Traffic Conditions 45
5.1 Roadway Improvements 45
5.2 EAP (2030) Traffic Volume Forecasts 45
5.3 Intersection Operations Analysis 45
5.4 Traffic Signal Warrants Analysis 48
5.5 Queuing Analysis 49
5.6 Deficiencies and Recommended Improvements 51
6 EAPC (2030) Traffic Conditions 53
6.1 Roadway Improvements 53
6.2 EAPC (2030) Traffic Volume Forecasts 53
6.3 Intersection Operations Analysis 53
6.4 Traffic Signal Warrants Analysis 55
6.5 Queuing Analysis 56
6.6 Deficiencies and Recommended Improvements 58
7 Local and Regional Funding Mechanisms 61
7.1 Riverside County Transportation Uniform Mitigation Fee (TUMF) 61
7.2 Riverside County Development Impact Fee (DIF) Program 61
7.3 Measure A 61
7.4 Fair Share Contribution 62
8 References 63

APPENDICES

Appendix 1.1: Approved Traffic Study Scoping Agreement

Appendix 1.2: Site Adjacent Queues

Appendix 3.1: Traffic Counts

Appendix 3.2: Existing (2024) Conditions Intersection Operations Analysis Worksheets

Appendix 3.3: Existing (2024) Conditions Traffic Signal Warrant Analysis Worksheets

Appendix 3.4: Existing (2024) Conditions Queuing Analysis Worksheets

Appendix 3.5: Existing (2024) Conditions Intersection Operations Analysis Worksheets With Improvements

Appendix 5.1: EAP (2030) (Project Only) Conditions Intersection Operations Analysis Worksheets

Appendix 5.2: EAP (2030) (Project plus Highland Grove IV plus Greentree) Conditions Intersection Operations Analysis Worksheets

Appendix 5.3: EAP (2030) (Project Only) Conditions Traffic Signal Warrant Analysis Worksheets

Appendix 5.4: EAP (2030) (Project plus Highland Grove IV plus Greentree) Conditions Traffic Signal Warrant Analysis Worksheets

Appendix 5.5: EAP (2030) (Project Only) Conditions Queuing Analysis Worksheets

Appendix 5.6: EAP (2030) (Project plus Highland Grove IV plus Greentree) Conditions Queuing Analysis Worksheets

Appendix 5.7: EAP (2030) (Project Only) Conditions Intersection Operations Analysis Worksheets With Improvements

Appendix 5.8: EAP (2030) (Project plus Highland Grove IV plus Greentree) Conditions Intersection Operations Analysis Worksheets With Improvements

Appendix 6.1: EAPC (2030) Conditions Intersection Operations Analysis Worksheets

Appendix 6.2: EAPC (2030) Conditions Queuing Analysis Worksheets

Appendix 6.3: EAPC (2030) Conditions Intersection Operations Analysis Worksheets With Improvements

LIST OF EXHIBITS

Exhibit 1-1: Location Map 2
Exhibit 1-2: Preliminary Site Plan 4
Exhibit 1-3: Study Area 7
Exhibit 1-4: Site Access Recommendations 11
Exhibit 3-1: Existing Number of Through Lanes and Intersection Controls 22
Exhibit 3-2: County of Riverside General Plan Circulation Element 23
Exhibit 3-3: County of Riverside General Plan Roadway Cross-Sections 24
Exhibit 3-4: City of Riverside General Plan Circulation Element 25
Exhibit 3-5 County of Riverside General Plan Bike Network 27
Exhibit 3-6 City of Riverside Bike Plan 28
Exhibit 3-7 Existing Pedestrian Facilities 29
Exhibit 3-8 Existing Transit Routes 30
Exhibit 3-9 Existing (2024) Traffic Volumes 31
Exhibit 4-1: Project Trip Distribution 39
Exhibit 4-2: Project Only Traffic Volumes 40
Exhibit 4-3: Cumulative Development Location Map 42
Exhibit 4-4: Cumulative Only Traffic Volumes 43
Exhibit 5-1: EAP (2030) (Project only) Traffic Volumes 46
Exhibit 5-2: EAP (2030) (Project plus Highland Grove IV plus Greentree) Traffic Volumes 47
Exhibit 6-1: EAPC (2030) Traffic Volumes 54

LIST OF TABLES

Table 1-1: Intersection Analysis Locations 6
Table 1-2: Summary of LOS 8
Table 1-3: Summary of Improvements by Analysis Scenario 10
Table 2-1: Signalized Intersection LOS Thresholds 16
Table 2-2: Unsignalized Intersection LOS Thresholds 17
Table 2-3: Traffic Signal Warrant Analysis Locations 18
Table 3-1: Intersection Analysis for Existing (2024) Conditions 32
Table 3-2: Peak Hour Queuing Summary for Existing (2024) Conditions 34
Table 3-3: Intersection Analysis for Existing (2024) Conditions With Improvements 35
Table 3-4: Peak Hour Queuing Summary for Existing (2024) Conditions With improvements 36
Table 4-1: Project Trip Generation Summary 37
Table 4-2: Cumulative Development land use Summary 41
Table 5-1: Intersection Analysis for EAP (2030) Conditions 48
Table 5-2: Peak Hour Queuing Summary for EAP (2030) Conditions 50
Table 5-3: Intersection Analysis for EAP (2030) Conditions With Improvements 52
Table 5-4: Peak Hour Queuing Summary for EAP (2030) Conditions With improvements 52
Table 6-1: Intersection Analysis for EAPC (2030) Conditions 55
Table 6-2: Peak Hour Queuing Summary for EAPC (2030) Conditions 57
Table 6-3: Intersection Analysis for EAPC (2030) Conditions With Improvements 58
Table 6-4: Peak Hour Queuing Summary for EAP (2030) Conditions With improvements 59
Table 7-1: Project Fair Share Calculations 62

LIST OF ABBREVIATED TERMS

(1)	Reference
ADT	Average Daily Traffic
CA MUTCD	California Manual on Uniform Traffic Control Devices
Caltrans	California Department of Transportation
CEQA	California Environmental Quality Act
CMP	Congestion Management Program
DIF	Development Impact Fee
EAP	Existing Plus Ambient Growth Plus Project
EAPC	Existing Plus Ambient Growth Plus Project Plus Cumulative
HCM	Highway Capacity Manual
ITE	Institute of Transportation Engineers
LOS	Level of Service
OPR	Office of Planning and Research
PHF	Peak Hour Factor
Project	Highland Grove TTM No. 38910
RCTC	Riverside County Transportation Commission
RTA	Riverside Transit Authority
TA	Traffic Analysis
TTM	Tentative Tract Map
TUMF	Transportation Uniform Mitigation Fee
WRCOG	Western Riverside Council of Governments
v/c	Volume to Capacity
VMT	Vehicle Miles Traveled

This page intentionally left blank

1 SUMMARY OF FINDINGS

This report presents the results of the Traffic Analysis (TA) for the Highland Grove Tentative Tract Map (**TTM**) No. 38910 (**Project**), which is located immediately north of El Sobrante Road, east of McAllister Street, and south of Travertine Drive in the County of Riverside, as shown on Exhibit 1-1.

The purpose of this TA is to evaluate the potential circulation system deficiencies that may result from the development of the proposed Project and, where necessary, recommend improvements to achieve acceptable operations consistent with General Plan level of service goals and policies. This TA has been prepared in accordance with the County of Riverside's Transportation Analysis Guidelines for Level of Service Vehicle Miles Traveled (December 2020) (**County Guidelines**) and through consultation with County of Riverside staff during the scoping process. (1) The approved Project Traffic Study Scoping Agreement is provided in Appendix 1.1 of this TA.

EXHIBIT 1-1 : LOCATION MAP

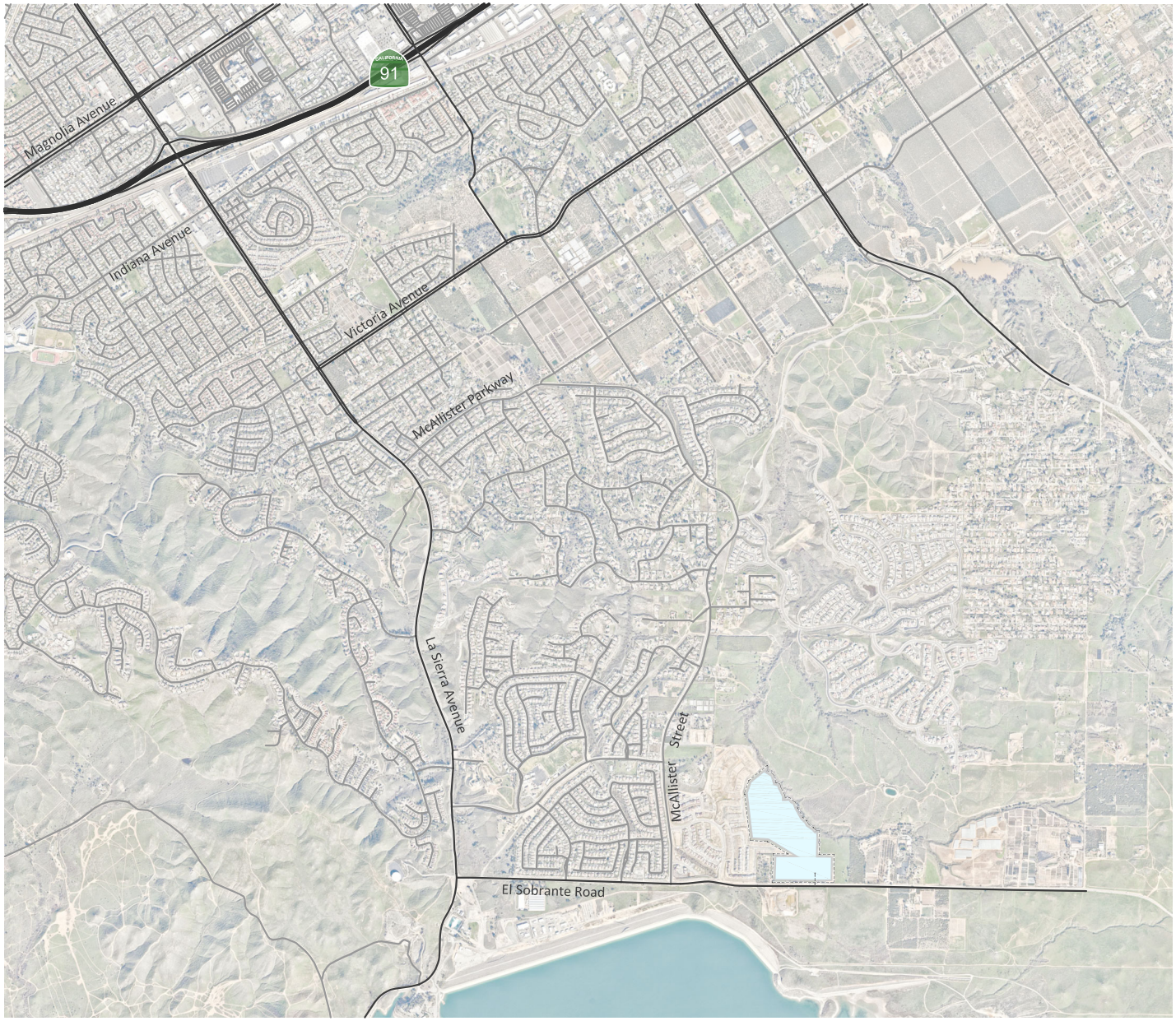

15858.dwg loc

1.1 PROJECT OVERVIEW

1.1.1 LAND USE

The Project consists of the development of 128 single-family detached residential dwelling units. A preliminary site plan for the Project is shown in Exhibit 1-2. Primary access to the Project site will be accommodated via a new connection to El Sobrante Road (via Street A). Street A at El Sobrante Road is assumed to allow for full access (no left turn restrictions). The Project is anticipated to have an Opening Year of 2030.

1.1.2 TRIP GENERATION

In order to develop the traffic characteristics of the Project, trip-generation statistics published in the Institute of Transportation Engineers (ITE) Trip Generation Manual (11th Edition, 2021) were used to estimate the Project's trip generation based on the Single Family Detached Housing (ITE Land Use Code 210) land use category. The Project is anticipated to generate 1,208 two-way trip-ends per day with 89 AM peak hour trips and 121 PM peak hour trips. The assumptions and methods used to estimate the Project's trip generation characteristics are discussed in greater detail in Section 4.1 *Project Trip Generation* of this report.

EXHIBIT 1-2 : PRELIMINARY SITE PLAN

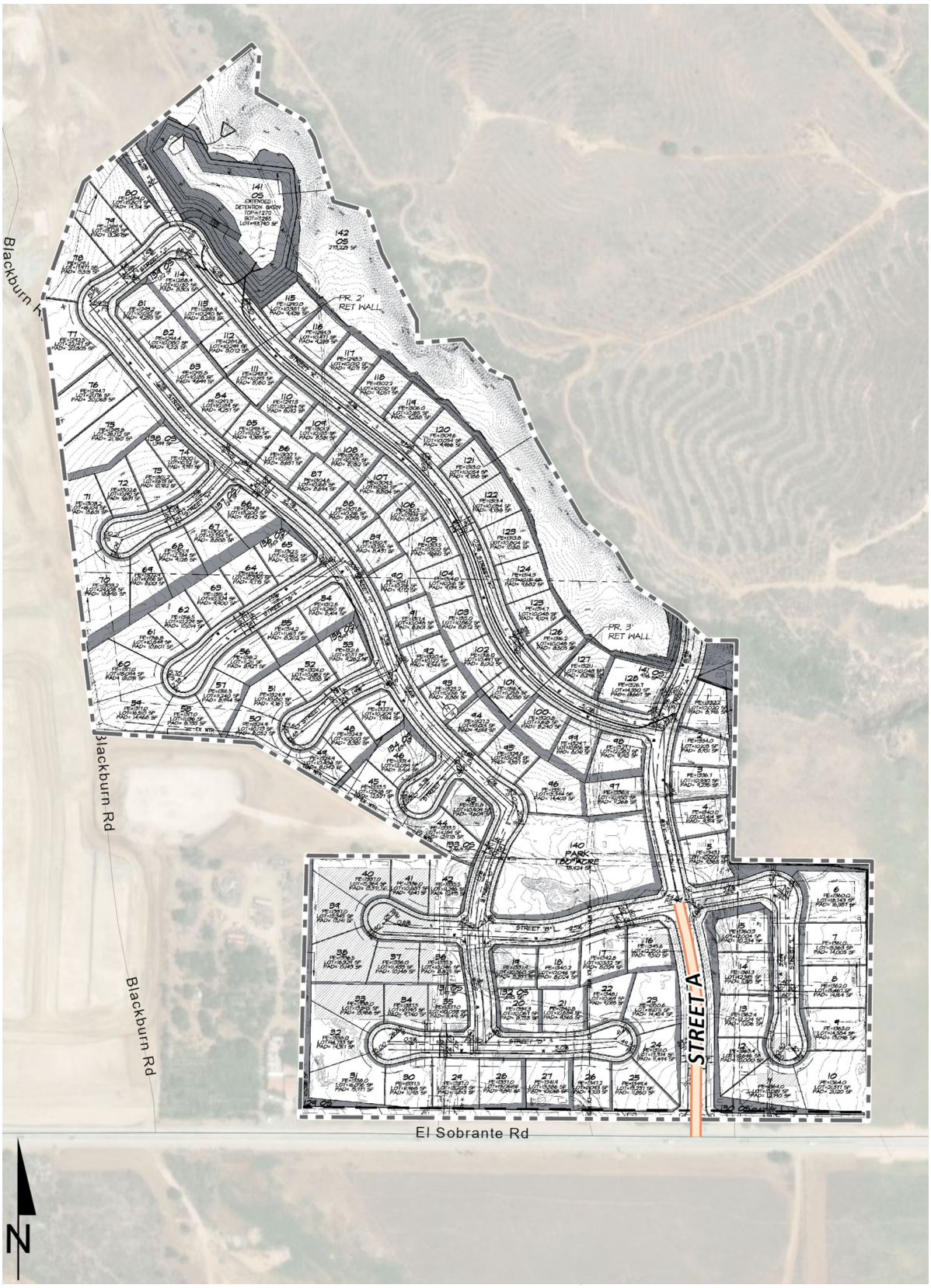

15858.dwg site

1.2 ANALYSIS SCENARIOS

For the purposes of this TA, potential deficiencies to intersection level of service (LOS) have been assessed for each of the following conditions:

- Existing (2024) Conditions
- Existing plus Ambient Growth plus Project (EAP) (2030) Conditions – Project only
- EAP (2030) Conditions – Project plus Highland Grove IV plus Greentree
- Existing plus Ambient Growth plus Project plus Cumulative (EAPC) (2030) Conditions

1.2.1 EXISTING (2024) CONDITIONS

Information for Existing (2024) conditions is disclosed to represent the baseline traffic conditions as they existed at the time this report was prepared. Local schools were in session and operating on normal bell schedules at the time traffic counts were collected. Construction activity was occurring at the intersection of McAllister Street at El Sobrante Road (#7); however, the usual number of lanes were not affected. Traffic counts were conducted in April 2024.

1.2.2 EAP (2030) CONDITIONS

The EAP (2030) (Project only) conditions analysis determines the potential circulation system deficiencies based on a comparison of the EAP (Project only) traffic conditions to Existing conditions. The roadway network is similar to Existing conditions except for new connections to be constructed by the Project. To account for background traffic growth, an ambient growth factor from Existing (2024) conditions of 12.62% (2 percent per year, compounded over 6 years) is included for EAP (2030) traffic conditions. The assumed ambient growth factor is based on the requirements per the County Guidelines. Consistent with County Guidelines, the EAP analysis is intended to identify "Opening Year" deficiencies associated with the development of the Project based on the expected background growth within the study area.

The EAP (2030) (Project plus Highland Grove IV plus Greentree) conditions analysis determines the potential near-term circulation system deficiencies based on a comparison of the EAP (Project plus Highland Grove IV plus Greentree) traffic conditions to Existing conditions. The EAP (Project plus Highland Grove IV plus Greentree) traffic conditions are similar to EAP (Project only) traffic conditions except for the inclusion of traffic from the Highland Grove IV and Greentree developments. The analysis is intended to identify "Opening Year" deficiencies associated with the development of the Project and the adjacent Highland Grove IV and Greentree developments, based on the expected background growth within the study area.

1.2.3 EAPC (2030) CONDITIONS

The EAPC (2030) traffic conditions analysis determines the potential near-term cumulative circulation system deficiencies. The roadway network is similar to Existing conditions except for new connections to be constructed by the Project. To account for background traffic growth, an ambient growth factor from Existing (2024) conditions of 12.62% (2 percent per year, compounded over 6 years) is included for EAPC (2030) traffic. Conservatively, this TA estimates the area ambient traffic growth and then adds traffic generated by other known or probable related projects. These related projects are at least in part already accounted for in the assumed ambient growth rates; and some of these related projects may not be implemented and operational within the 2030 Opening Year time frame assumed for the Project. The resulting traffic growth utilized in the TA (ambient growth factor plus traffic generated by related projects) would therefore tend to overstate rather than understate background cumulative traffic deficiencies under 2030 conditions.

1.3 STUDY AREA

For the purposes of this TA, 8 study area intersections were selected for evaluation based on County Guidelines and consultation with County staff. (1) The 8 study area intersections shown on Exhibit 1-3 and listed in Table 1-1 have been selected for assessment based on the County's analysis criteria of 50 or more peak hour trips. The study area intersections will be evaluated using the Highway Capacity Manual (HCM) 7th Edition methodology.

TABLE 1-1: INTERSECTION ANALYSIS LOCATIONS

#	Intersection	Jurisdiction	CMP?
1	La Sierra Av. & SR-91 WB Ramps	City of Riverside, Caltrans	No
2	La Sierra Av. & SR-91 EB Ramps	City of Riverside, Caltrans	No
3	La Sierra Av. & Indiana Av.	City of Riverside	No
4	La Sierra Av. & Victoria Av.	County of Riverside, City of Riverside	No
5	La Sierra Av. & McAllister St.	County of Riverside	No
6	La Sierra Av. & El Sobrante Rd.	County of Riverside	No
7	McAllister St. & El Sobrante Rd.	County of Riverside	No
8	Street A & El Sobrante Rd.	County of Riverside	No

The intent of a Congestion Management Program (CMP) is to directly link land use, transportation, and air quality, thereby prompting reasonable growth management programs that will effectively utilize new transportation funds, alleviate traffic congestion and related deficiencies, and improve air quality. The County of Riverside CMP became effective with the passage of Proposition 111 in 1990 and most recently updated in 2019 as part of the Riverside County Long Range Transportation Study. The Riverside County Transportation Commission (RCTC) adopted the 2019 CMP for the County of Riverside in December 2019. (2) There are no study area intersections identified as a Riverside County CMP intersection.

EXHIBIT 1-3 : STUDY AREA

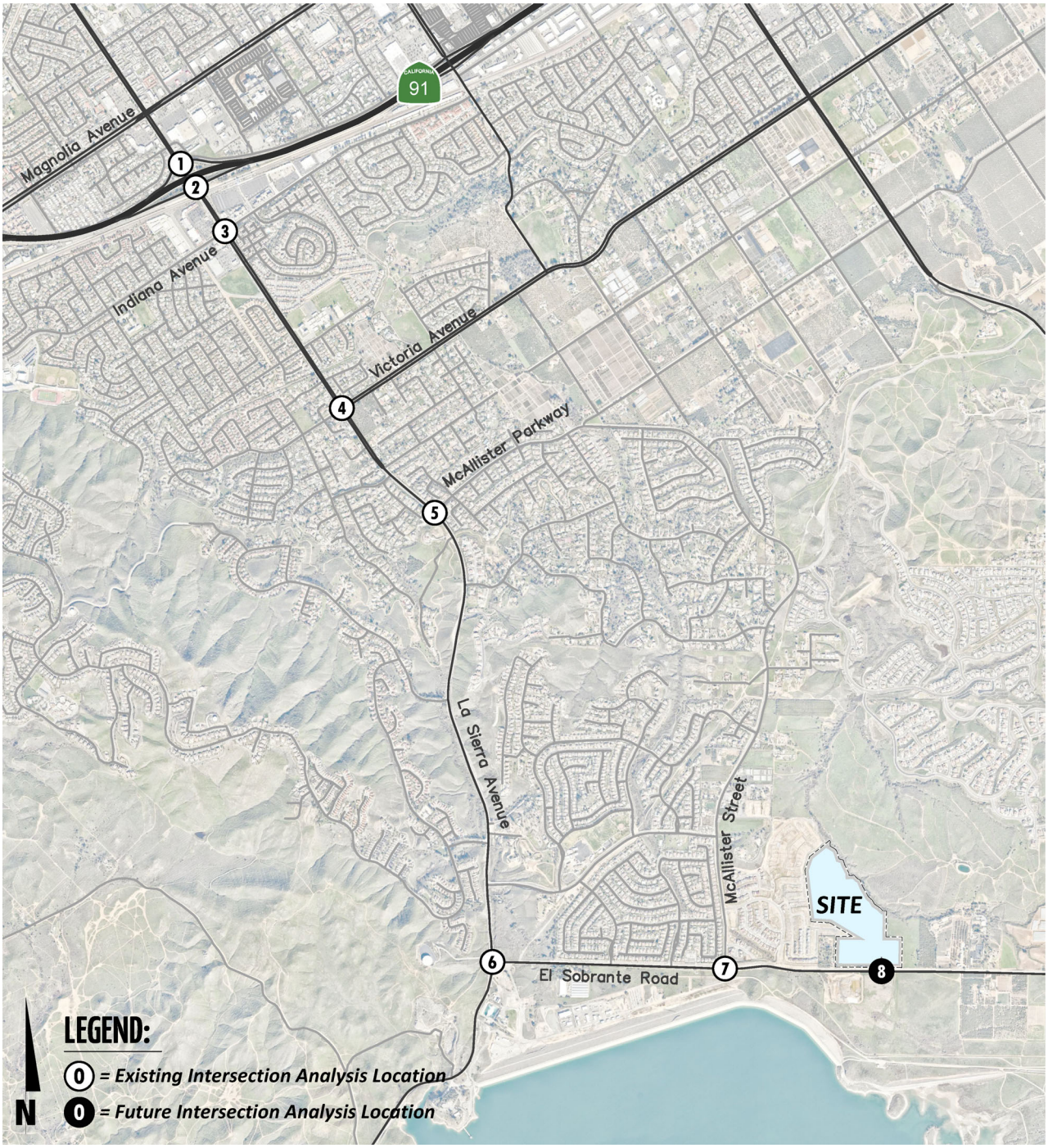

1.4 GENERAL PLAN CONSISTENCY REQUIREMENTS FOR INTERSECTIONS

This section provides a brief overview of the intersection LOS deficiencies identified in this report. The LOS standards used for this assessment are consistent with those identified in the County of Riverside General Plan. Section 2 *Methodologies* provides a detailed explanation on the methodologies used for this assessment, while Section 3 *Area Conditions,* Section 5 *EAP (2030) Traffic Conditions,* and Section 6 *EAPC (2030) Traffic Conditions* include the operations analysis results for each analysis scenario. Additionally, a summary of the peak hour LOS analysis results is presented in Table 1-2.

1.4.1 EXISTING (2024) CONDITIONS

The assessment of Existing (2024) traffic conditions is performed to establish a baseline of current LOS operations from which the effects of the Project's future contribution of traffic can be measured. The study area intersections were found to currently operate at an acceptable LOS (i.e., at or above the County of Riverside's adopted General Plan thresholds) during the peak hours, with the exception of the following intersections:

- La Sierra Avenue & El Sobrante Road (#6) – LOS F PM peak hour only
- McAllister Street & El Sobrante Road (#7) – LOS E PM peak hour only

1.4.2 EAP AND EAPC (2030) CONDITIONS

An assessment of Opening Year and Cumulative traffic conditions is performed to identify whether the traffic contribution associated with both the Project and that of other reasonably foreseeable future development projects in the area have the potential to cause intersection LOS to fall below the City's adopted thresholds. The Project's contribution to these forecasted LOS deficiencies is typically addressed through fee payments to an established fee program (both local and regional).

The results of the LOS assessments for Opening Year and Cumulative traffic conditions are also summarized in Table 1-3, while Section 5 *EAP (2030) Traffic Conditions* and Section 6 *EAPC (2030) Traffic Conditions* of the report provide a more detailed list of the forecast LOS deficiencies.

TABLE 1-2: SUMMARY OF LOS

		Existing (2024)	EAP (2030) Project Only	EAP (2030) Project + Highland Grove + Greentree	EAPC (2030)
1	**La Sierra Av. & SR-91 WB Ramps**				
2	**La Sierra Av. & SR-91 EB Ramps**				
3	**La Sierra Av. & Indiana Av.**				
4	**La Sierra Av. & Victoria Av.**				
5	**La Sierra Av. & McAllister St.**				
6	**La Sierra Av. & El Sobrante Rd.**				
7	**McAllister St. & El Sobrante Rd.**				
8	**Street A & El Sobrante Rd.**	N/A			

LEGEND

= AM Peak Hour
= PM Peak Hour
= A-D
= E
= F

1.5 RECOMMENDATIONS

1.5.1 INTERSECTION IMPROVEMENT RECOMMENDATIONS NECESSARY TO MAINTAIN GENERAL PLAN CONSISTENCY

The summary of intersection improvement recommendations to maintain General Plan LOS standards for EAP and EAPC (2030) are listed in Table 1-3 below.

1.5.2 ON-SITE CIRCULATION RECOMMENDATIONS

The following recommendations, based on the improvements needed to accommodate site access and maintain acceptable peak hour LOS at site access and on-site intersections, are described below and shown on Exhibit 1-4. The site adjacent queuing analysis worksheets are provided in Appendix 1.2 for EAPC (2030) traffic conditions. No site adjacent queues are anticipated with the proposed improvements.

Recommendation 1 – Street A & El Sobrante Road (#8) – The following improvements are necessary to accommodate site access:

- Project to install a stop control on the southbound approach (Street A) to implement a cross-street stop-controlled intersection and construct a shared left-right turn lane.
- Project to construct an eastbound left turn lane with a minimum of 100-feet of storage.

Recommendation 2 – Street A is a north-south oriented roadway bisecting the Project site, providing primary Project access to El Sobrante Road. Project to construct Street A at its ultimate full-section width as a Local roadway (60-foot right-of-way), from El Sobrante Road to the Project's northern boundary, consistent with the County's standards.

On-site traffic signing and striping should be implemented agreeable with the provisions of the California Manual on Uniform Traffic Control Devices (CA MUTCD) and in conjunction with detailed construction plans for the Project site.

Sight distance at each Project access point should be reviewed with respect to standard Caltrans and County of Riverside sight distance standards at the time of preparation of final grading, landscape, and street improvement plans.

TABLE 1-3: SUMMARY OF IMPROVEMENTS BY ANALYSIS SCENARIO

#	Intersection Location	Jurisdiction	Analysis Scenario				Improvements in DIF, TUMF, etc.[1,2]	Project Responsibility	Project Fair Share
			Existing (2024)	EAP (2030) (Project Only)	EAP (2030) (Project plus Highland Grove IV plus Greentree)	EAPC (2030)			
6	La Sierra Av. & El Sobrante Rd.	County of Riverside	Install a Traffic Signal	Same	Same	Same	No	Fair Share	13.6%
						Add WB right turn lane with overlap phasing	No	Fair Share	
7	McAllister St. & El Sobrante Rd.	County of Riverside	Install a Traffic Signal	Same	Same	Same	No	Fair Share	17.9%

[1] Improvements included in regional/City DIF programs have been identified as such.

[2] Program improvements constructed by project may be eligible for fee credit. In lieu fee payment is at the discretion of the City.

EXHIBIT 1-4 : SITE ACCESS RECOMMENDATIONS



LEGEND

- = Future Intersection Analysis Location
- = Existing Traffic Lane
- 100' = Minimum Turn Pocket Length Improvement
- = Stop Sign Improvement
- = Traffic Lane Improvement

15858 icon recs.dwg - recs

1.6 QUEUING ANALYSIS

The traffic modeling and signal timing optimization software package SimTraffic has been utilized to assess the queues, for both on-site roadways (Project design features) and off-site interchange off-ramp queues. SimTraffic is designed to model networks of signalized and unsignalized intersections, with the primary purpose of checking and fine-tuning signal operations. SimTraffic uses the input parameters from Synchro to generate random simulations. These random simulations generated by SimTraffic have been utilized to determine the 95th percentile queue lengths observed for each applicable turn lane. A SimTraffic simulation has been recorded up to 5 times, during the weekday AM and weekday PM peak hours, and has been seeded for 15-minute periods with 60-minute recording intervals.

1.6.1 OFF-SITE QUEUING

Existing (2024) Conditions

A queuing analysis has also been conducted at all signalized study area intersections along La Sierra Avenue at the request of the County. Based on the results of this analysis, the following movements currently experience queuing issues during the weekday AM or weekday PM peak 95th percentile traffic flows:

- La Sierra Avenue & SR-91 WB Ramps (#1), northbound left turn lane – AM and PM peak hours
- La Sierra Avenue & SR-91 WB Ramps (#1), southbound through lane – PM peak hour only
- La Sierra Avenue & SR-91 EB Ramps (#2), southbound left turn lane – PM peak hour only
- La Sierra Avenue & Indiana Avenue (#3), northbound left turn lane – AM peak hour only
- La Sierra Avenue & Indiana Avenue (#3), eastbound left turn lane – AM and PM peak hours
- La Sierra Avenue & Indiana Avenue (#3), eastbound right turn lane – PM peak hour only
- La Sierra Avenue & Victoria Avenue (#4), southbound left turn lane – PM peak hour only
- La Sierra Avenue & Victoria Avenue (#4), westbound left turn lane – PM peak hour only
- La Sierra Avenue & McAllister Parkway (#5), southbound left turn lane – PM peak hour only

Opening Year Traffic Conditions – EAP and EAPC

The following additional movement is anticipated to experience queuing issues during the weekday AM or weekday PM peak 95th percentile traffic flows, in addition to the movements identified under Existing (2024) Conditions, under EAP (2030) (Project only) traffic conditions:

- La Sierra Avenue & Indiana Avenue (#3), northbound left turn lane – PM peak hour
- La Sierra Avenue & Indiana Avenue (#3), northbound through lane – AM peak hour only
- La Sierra Avenue & Indiana Avenue (#3), westbound right turn lane – AM and PM peak hours
- La Sierra Avenue & Victoria Avenue (#4), southbound left turn lane – AM peak hour

There are no additional movements anticipated to experience queuing issues during the weekday AM or weekday PM peak 95th percentile traffic flows with the addition of Highland Grove IV and Greentree traffic under EAP (2030) (Project plus Highland Grove IV plus Greentree) traffic conditions.

With the addition of the remaining cumulative traffic, the following additional movements are anticipated to experience queuing issues during the weekday AM or weekday PM peak 95th percentile traffic flows under EAPC (2030) traffic conditions:

- La Sierra Avenue & SR-91 WB Ramps (#1), southbound through lane – AM peak hour
- La Sierra Avenue & SR-91 WB Ramps (#1), southbound right turn lane – PM peak hour only
- La Sierra Avenue & SR-91 EB Ramps (#2), southbound left turn lane – AM peak hour
- La Sierra Avenue & McAllister Parkway (#5), southbound left turn lane – AM peak hour

1.6.2 ON-SITE QUEUING

The results of the site adjacent queuing analysis worksheets for the weekday AM and PM peak hours are provided in Appendix 1.2 of this report for EAPC (2030) traffic conditions and have been used to verify the recommended pocket lengths for each of the future intersections anticipated to be completed as part of the Project, as discussed in Section 1.5.2 *On-Site Circulation Recommendations*. Exhibit 1-4 provides the necessary turn pocket lengths, based on the results of the on-site queuing analysis.

This page intentionally left blank

2 METHODOLOGIES

This section of the report presents the methodologies used to perform the traffic analyses summarized in this report. The methodologies described are consistent with County of Riverside's Traffic Study Guidelines.

2.1 LEVEL OF SERVICE

Traffic operations of roadway facilities are described using the term "Level of Service" (LOS). LOS is a qualitative description of traffic flow based on several factors, such as speed, travel time, delay, and freedom to maneuver. Six levels are typically defined ranging from LOS A, representing completely free-flow conditions, to LOS F, representing a breakdown in flow resulting in stop-and-go conditions. LOS E represents operations at or near capacity, an unstable level where vehicles are operating with the minimum spacing for maintaining uniform flow.

2.2 INTERSECTION CAPACITY ANALYSIS

The definitions of LOS for interrupted traffic flow (flow restrained by the existence of traffic signals and other traffic control devices) differ slightly depending on the type of traffic control. The LOS is typically dependent on the quality of traffic flow at the intersections along a roadway. The 7th Edition Highway Capacity Manual (HCM) methodology expresses the LOS at an intersection in terms of delay time for the various intersection approaches. (3) The HCM uses different procedures depending on the type of intersection control.

2.2.1 SIGNALIZED INTERSECTIONS

The County of Riverside, City of Riverside, and California Department of Transportation (Caltrans) require signalized intersection operations analysis based on the methodology described in the HCM. (3) Intersection LOS operations are based on an intersection's average control delay. Control delay includes initial deceleration delay, queue move-up time, stopped delay, and final acceleration delay. For signalized intersections, LOS is related to the average control delay per vehicle and is correlated to a LOS designation as described in Table 2-1.

The traffic modeling and signal timing optimization software package Synchro (Version 12) has been utilized to analyze signalized intersections. Synchro is a macroscopic traffic software program that is based on the signalized intersection capacity analysis as specified in the HCM. Macroscopic level models represent traffic in terms of aggregate measures for each movement at the study intersections. Equations are used to determine measures of effectiveness such as delay and queue length. The level of service and capacity analysis performed by Synchro takes into consideration optimization and coordination of signalized intersections within a network.

TABLE 2-1: SIGNALIZED INTERSECTION LOS THRESHOLDS

Description	Average Control Delay (Seconds), V/C ≤ 1.0	Level of Service, V/C ≤ 1.0[1]
Operations with very low delay occurring with favorable progression and/or short cycle length.	0 to 10.00	A
Operations with low delay occurring with good progression and/or short cycle lengths.	10.01 to 20.00	B
Operations with average delays resulting from fair progression and/or longer cycle lengths. Individual cycle failures begin to appear.	20.01 to 35.00	C
Operations with longer delays due to a combination of unfavorable progression, long cycle lengths, or high V/C ratios. Many vehicles stop and individual cycle failures are noticeable.	35.01 to 55.00	D
Operations with high delay values indicating poor progression, long cycle lengths, and high V/C ratios. Individual cycle failures are frequent occurrences. This is considered to be the limit of acceptable delay.	55.01 to 80.00	E
Operation with delays unacceptable to most drivers occurring due to over saturation, poor progression, or very long cycle lengths.	80.01 and up	F

Source: HCM, 7th Edition

[1] If V/C is greater than 1.0, then LOS is F per HCM.

A saturation flow rate of 1900 has been utilized for all study area intersections located within the County of Riverside and City of Riverside. The peak hour traffic volumes have been adjusted using a peak hour factor (PHF) to reflect peak 15-minute volumes. Customary practice for LOS analysis is to use a peak 15-minute rate of flow. However, flow rates are typically expressed in vehicles per hour. The PHF is the relationship between the peak 15-minute flow rate and the full hourly volume (e.g., PHF = [Hourly Volume] / [4 x Peak 15-minute Flow Rate]). The use of a 15-minute PHF produces a more detailed analysis as compared to analyzing vehicles per hour. Existing PHFs have been used for all analysis scenarios. Per the HCM, PHF values over 0.95 often are indicative of high traffic volumes with capacity constraints on peak hour flows while lower PHF values are indicative of greater variability of flow during the peak hour. (3)

2.2.2 UNSIGNALIZED INTERSECTIONS

The County of Riverside and City of Riverside require the operations of unsignalized intersections be evaluated using the methodology described in the HCM. (3) The LOS rating is based on the weighted average control delay expressed in seconds per vehicle (see Table 2-2). At two-way or side-street stop-controlled intersections, LOS is calculated for each controlled movement and for the left turn movement from the major street, as well as for the intersection as a whole. For approaches composed of a single lane, the delay is computed as the average of all movements in that lane. Delay for the intersection is reported for the worst individual movement at a two-way stop-controlled intersection. For all-way stop-controlled intersections, LOS is computed for the intersection as a whole (average delay).

TABLE 2-2: UNSIGNALIZED INTERSECTION LOS THRESHOLDS

Description	Average Control Delay (Seconds), V/C ≤ 1.0	Level of Service, V/C ≤ 1.0[1]
Little or no delays.	0 to 10.00	A
Short traffic delays.	10.01 to 15.00	B
Average traffic delays.	15.01 to 25.00	C
Long traffic delays.	25.01 to 35.00	D
Very long traffic delays.	35.01 to 50.00	E
Extreme traffic delays with intersection capacity exceeded.	> 50.00	F

Source: HCM, 7th Edition

[1] If V/C is greater than 1.0, then LOS is F per HCM.

2.3 TRAFFIC SIGNAL WARRANT ANALYSIS METHODOLOGY

The term “signal warrants” refers to the list of established criteria used by Caltrans and other public agencies to quantitatively justify or determine the potential need for installation of a traffic signal at an otherwise unsignalized intersection. This TA uses the signal warrant criteria presented in the latest edition of the Caltrans California Manual on Uniform Traffic Control Devices (CA MUTCD). (4)

The signal warrant criteria for Existing study area intersections are based upon several factors, including volume of vehicular and pedestrian traffic, frequency of accidents, and location of school areas. The CA MUTCD indicates that the installation of a traffic signal should be considered if one or more of the signal warrants are met. (4) Specifically, this TA utilizes the Peak Hour Volume-based Warrant 3 as the appropriate representative traffic signal warrant analysis for existing traffic conditions and for all future analysis scenarios for existing unsignalized intersections. Warrant 3 is appropriate to use for this TA because it provides specialized warrant criteria for intersections with rural characteristics. For the purposes of this study, the speed limit was the basis for determining whether Urban or Rural warrants were used for a given intersection. Rural warrants have been used on the major roadways with unsignalized intersections with posted speed limits over 40 miles per hour, while urban warrants have been used where speeds are 40 miles per hour or below.

Future intersections that do not currently exist have been assessed regarding the potential need for new traffic signals based on future average daily traffic (ADT) volumes, using the Caltrans planning level ADT-based signal warrant analysis worksheets. Similarly, the speed limit has been used as the basis for determining the use of Urban and Rural warrants. Traffic signal warrant analyses were performed for the following study area intersections shown in Table 2-3.

TABLE 2-3: TRAFFIC SIGNAL WARRANT ANALYSIS LOCATIONS

#	Intersection
6	La Sierra Av. & El Sobrante Rd.
7	McAllister St. & El Sobrante Rd.
8	Street A & El Sobrante Rd.

The Existing conditions traffic signal warrant analysis is presented in the subsequent section, Section 3 *Area Conditions* of this report. The traffic signal warrant analyses for future conditions are presented in Section 5 *EAP (2030) Traffic Conditions* and Section 6 *EAPC (2030) Traffic Conditions* of this report. It is important to note that a signal warrant defines the minimum condition under which the installation of a traffic signal might be warranted. Meeting this threshold condition does not require that a traffic control signal be installed at a particular location, but rather, that other traffic factors and conditions be evaluated in order to determine whether the signal is truly justified. It should also be noted that signal warrants do not necessarily correlate with LOS. An intersection may satisfy a signal warrant condition and operate at or above acceptable LOS or operate below acceptable LOS and not meet a signal warrant.

2.4 QUEUING ANALYSIS

Consistent with Caltrans requirements, the 95th percentile queuing of vehicles has been assessed at the off-ramps to determine potential queuing deficiencies at the freeway ramp intersections of the SR-91 Freeway at the existing La Sierra Avenue interchanges. Specifically, the off-ramp queuing analysis is utilized to identify any potential queuing and "spill back" onto the SR-91 Freeway mainline from the off-ramps. The 95th percentile queue has also been utilized to assess the queues at La Sierra Avenue to identify any potential queuing. Additionally, the County has requested a queueing analysis at all signalized study area intersections, for both turn lanes and through lanes. The results of this analysis are presented in the subsequent sections of this traffic study.

The traffic progression analysis tool and HCM intersection analysis program, Synchro, has been used to assess the potential deficiencies/needs of the intersections with traffic added from the proposed Project. Storage (turn-pocket) length recommendations at the ramps have been based upon the 95th percentile queue resulting from the Synchro progression analysis. The footnote from the Synchro output sheets indicates if the 95th percentile cycle exceeds capacity. Traffic is simulated for two complete cycles of the 95th percentile traffic in Synchro in order to account for the effects of spillover between cycles. In practice, the 95th percentile queue shown will rarely be exceeded and the queues shown with the footnote are acceptable for the design of storage bays. The 95th percentile queue is derived from the average queue plus 1.65 standard deviations.

At the request of the County of Riverside, the traffic modeling and signal timing optimization software package Synchro/SimTraffic (Version 12) has been utilized to assess queues at the Project access points. Synchro is a macroscopic traffic software program that is based on the signalized and unsignalized intersection capacity analyses as specified in the HCM. SimTraffic is designed to model networks of signalized and unsignalized intersections, with the primary purpose of checking and fine-tuning signal operations. SimTraffic uses the input parameters from Synchro to generate random simulations.

The 95th percentile queue is not necessarily ever observed; it is simply based on statistical calculations (or Average Queue plus 1.65 standard deviations). Many jurisdictions utilize the 95th percentile queues for design purposes. SimTraffic simulations have been recorded 5 times, during the weekday AM and weekday PM peak hours, and has been seeded for 15-minute periods with 60-minute recording intervals. For the purposes of this traffic analysis, the County has requested the maximum queues be reported from the Simtraffic software. The results of the queuing analysis are presented in the subsequent sections. Queuing worksheets for the site adjacent queuing analysis are included in Appendix 1.2.

2.5 MINIMUM ACCEPTABLE LEVELS OF SERVICE (LOS)

Minimum acceptable LOS and associated definitions of intersection deficiencies has been obtained from each of the applicable surrounding jurisdictions.

2.5.1 COUNTY OF RIVERSIDE

The definition of an intersection deficiency has been obtained from the County of Riverside General Plan. Riverside County General Plan Policy C 2.1 states that the County will maintain the following County-wide target LOS:

The following minimum target levels of service have been designated for the review of development proposals in the unincorporated areas of Riverside County with respect to transportation impacts on roadways designated in the Riverside County Circulation Plan which are currently County maintained, or are intended to be accepted into the County maintained roadway system:

- *LOS C shall apply to all development proposals in any area of the Riverside County not located within the boundaries of an Area Plan, as well as those areas located within the following Area Plans: REMAP, Eastern Coachella Valley, Desert Center, Palo Verde Valley, and those non-Community Development areas of the Elsinore, Lake Mathews/Woodcrest, Mead Valley and Temescal Canyon Area Plans.*
- *LOS D shall apply to all development proposals located within any of the following Area Plans: Eastvale, Jurupa, Highgrove, Reche Canyon/Badlands, Lakeview/Nuevo, Sun City/Menifee Valley, Harvest Valley/Winchester, Southwest Area, The Pass, San Jacinto Valley, Western Coachella Valley and those Community Development Areas of the Elsinore, Lake Mathews/Woodcrest, Mead Valley and Temescal Canyon Area Plans.*
- *LOS E may be allowed by the Board of Supervisors within designated areas where transit-oriented development and walkable communities are proposed.*

The applicable minimum LOS utilized for the purposes of this analysis is LOS D per the County-wide target LOS for projects located within the Lake Mathews/Woodcrest Area Plan.

2.5.2 CITY OF RIVERSIDE

Per the City of Riverside traffic study guidelines, for Projects that are in conformance with the General Plan:

a) LOS C is to be maintained at all street intersections;

b) LOS D is to be maintained at intersections of Collector or higher classification (see General Plan Policy CCM 2.3).

As such, and consistent with the County of Riverside, LOS D has been utilized as the minimum acceptable LOS for intersections within the City of Riverside.

2.5.3 CALTRANS

Senate Bill 743 (SB 743), approved in 2013, endeavors to change the way transportation impacts will be determined according to the California Environmental Quality Act (CEQA). The Office of Planning and Research (OPR) has recommended the use of vehicle miles traveled (VMT) as the replacement for automobile delay-based LOS. Caltrans acknowledges automobile delay will no longer be considered a CEQA impact for development projects and will use VMT as the metric for determining impacts on the State Highway System. However, LOS D has been utilized as the target LOS for Caltrans facilities, consistent with the County of Riverside.

2.6 DEFICIENCY CRITERIA

This section outlines the methodology used in this analysis related to identifying circulation system deficiencies. The following deficiency criteria has been utilized for the County of Riverside. To determine whether the addition of project-related traffic at a study intersection would result in a deficiency, the following will be utilized:

- A deficiency occurs at study area intersections if the pre-Project condition is at or better than LOS D (i.e., acceptable LOS), and the addition of project trips causes the peak hour LOS of the study area intersection to operate at unacceptable LOS (i.e., LOS E or F). Per the County of Riverside traffic study guidelines, for intersections currently operating at unacceptable LOS (LOS E or F), a deficiency will occur if the Project contributes peak hour trips to pre-project traffic conditions.

2.7 PROJECT FAIR SHARE CALCULATION METHODOLOGY

Improvements found to be included in the County TUMF and/or DIF programs will be identified as such. For improvements that do not appear to be in either of the pre-existing fee programs, a fair share contribution based on the Project's proportional share may be imposed in order to address the Project's share of deficiencies in lieu of construction. It should be noted that fair share calculations are for informational purposes only and the County Traffic Engineer will determine the appropriate improvements to be implemented by a project (to be identified in the conditions of approval). The Project's fair share cost of improvements would be determined based on the following equation, which is the ratio of Project traffic to new traffic, where new traffic is total future traffic less existing baseline traffic:

Project Fair Share % = Project Traffic / (EAPC (2030) Total Traffic – Existing (2024) Traffic)

3 AREA CONDITIONS

This section provides a summary of the existing circulation network, the County of Riverside General Plan Circulation Network, and a review of existing peak hour intersection operations, traffic signal warrant, and off-ramp queuing analyses.

3.1 EXISTING CIRCULATION NETWORK

Pursuant to the scoping agreement with County of Riverside staff (Appendix 1.1), the study area includes a total of 8 existing and future intersections as shown previously on Exhibit 1-3, where the Project is anticipated to contribute 50 or more peak hour trips or were added at the County's request during the scoping process. Exhibit 3-1 illustrates the study area intersections located near the proposed Project and identifies the number of through traffic lanes for existing roadways and intersection traffic controls.

3.2 COUNTY OF RIVERSIDE GENERAL PLAN CIRCULATION ELEMENT

As noted previously, the Project site is located within the County of Riverside. The roadway classifications and planned (ultimate) roadway cross-sections of the major roadways within the study area, as identified on County of Riverside General Plan Circulation Element, are described subsequently. Exhibit 3-2 shows the County of Riverside General Plan Circulation Element and Exhibit 3-3 illustrates the County of Riverside General Plan roadway cross-sections.

Arterials are four-lane divided roadways (typically divided by a raised median or painted two-way turn-lane) with a 128-foot right-of-way and an 86-foot curb-to-curb measurement. These roadways serve both regional through-traffic and inter-city traffic and typically direct traffic onto and off-of the freeways. The following study area roadways within the County of Riverside are classified as an Arterial:

- La Sierra Avenue
- El Sobrante Road

Collectors are two-lane roadways. These roadways typically have a 74-foot right-of-way and a 40-foot curb-to-curb measurement. The following study area roadway within the County of Riverside is classified as a Collector:

- McAllister Street

3.3 CITY OF RIVERSIDE GENERAL PLAN CIRCULATION ELEMENT

Exhibit 3-4 shows the City of Riverside General Plan Circulation Element.

EXHIBIT 3-1 : EXISTING NUMBER OF THROUGH LANES AND INTERSECTION CONTROLS

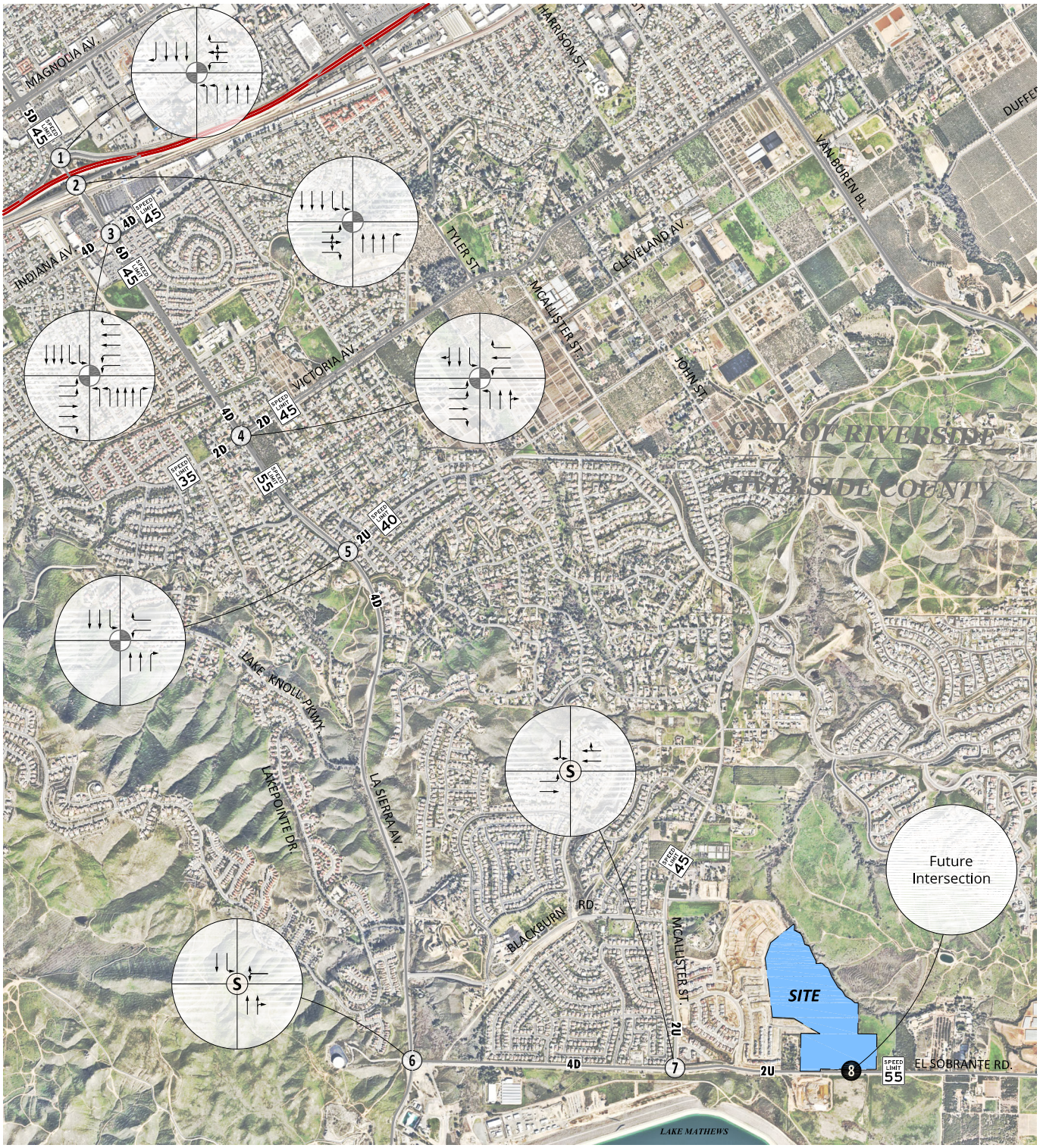

LEGEND

- ⓪ = *Existing Intersection Analysis Location*
- ⓪ = *Future Intersection Analysis Location*
- = *Existing Traffic Signal*
- Ⓢ = *Existing All-Way Stop*
- = *Existing Traffic Lane*

15858 icon recs.dwg - icon

EXHIBIT 3-2 : COUNTY OF RIVERSIDE GENERAL PLAN CIRCULATION ELEMENT

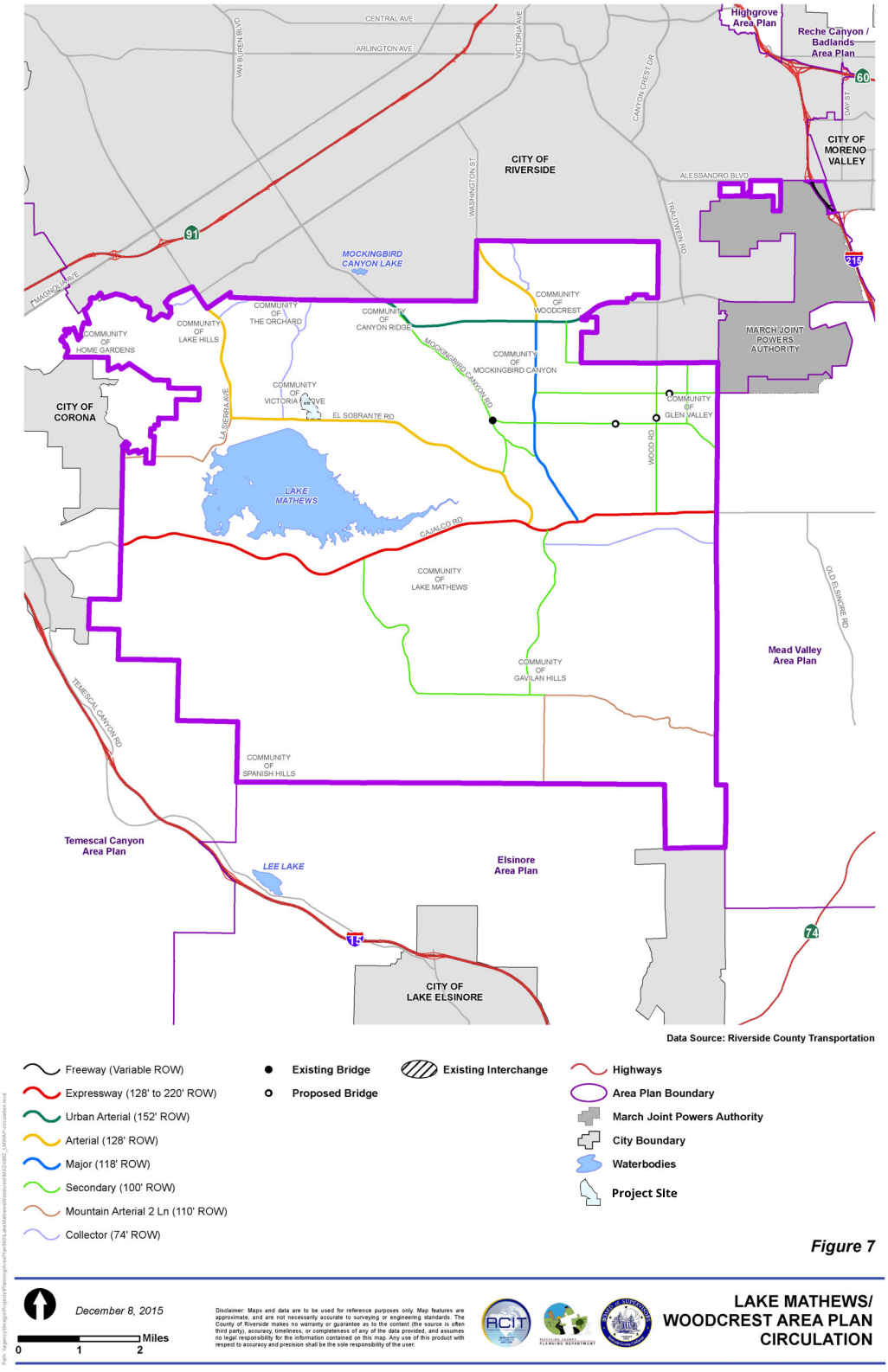

EXHIBIT 3-3 : COUNTY OF RIVERSIDE GENERAL PLAN ROADWAY CROSS-SECTIONS

Figure C-3 Street Classification Cross-Sections

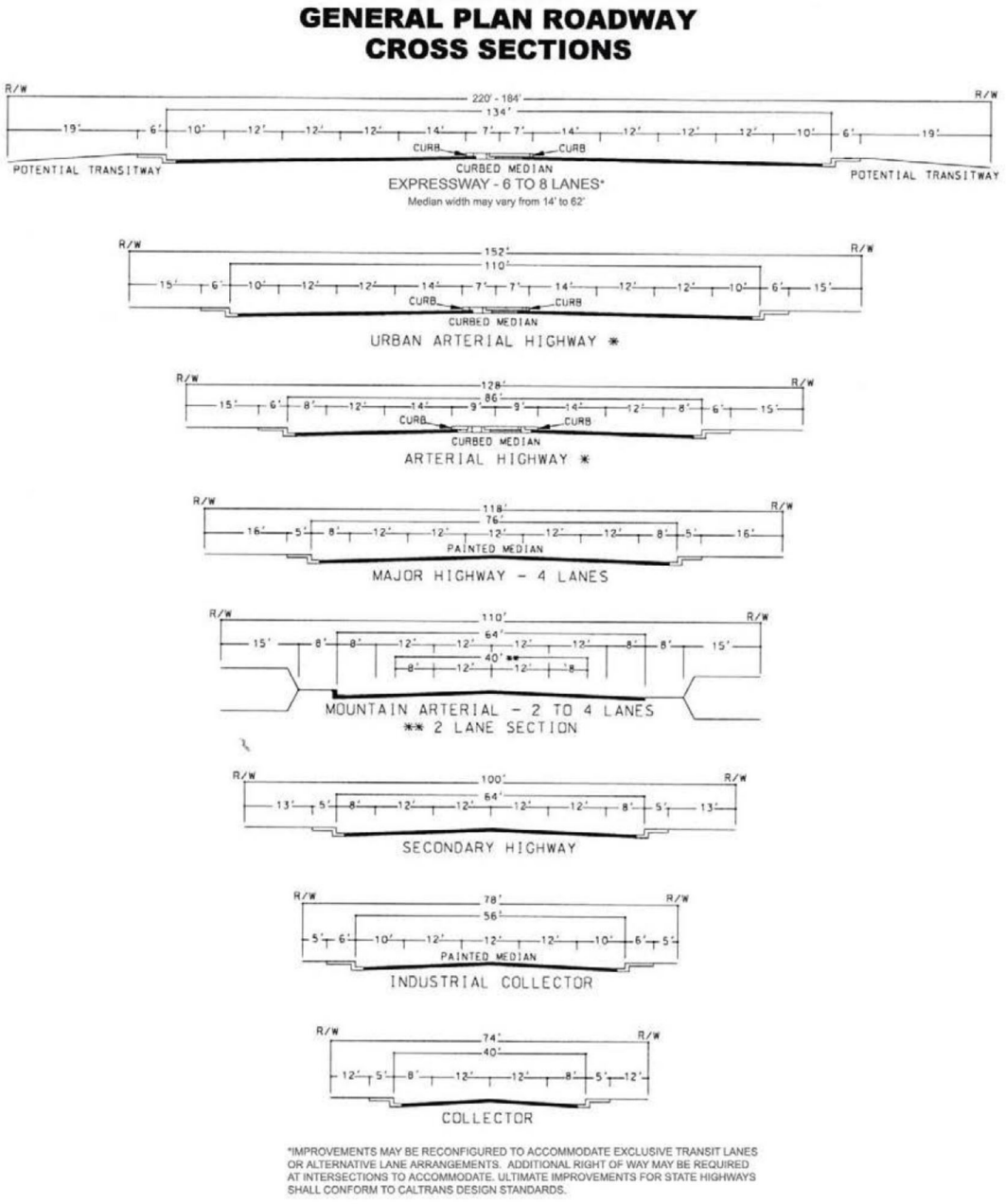

15858.dwg x sect

EXHIBIT 3-4 : CITY OF RIVERSIDE GENERAL PLAN CIRCULATION ELEMENT

CIRCULATION ELEMENT

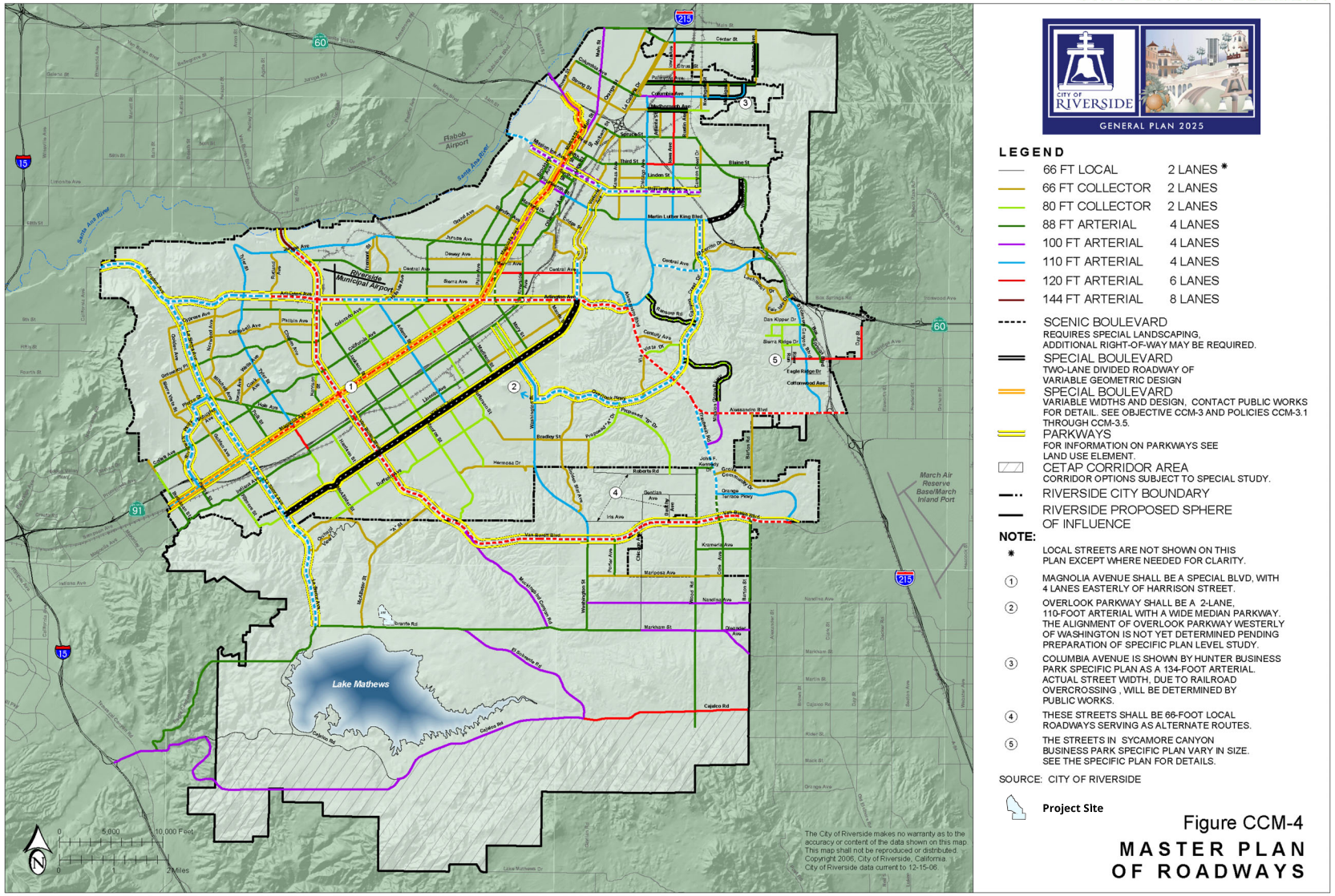

15858.dwg gpce

3.4 BICYCLE & PEDESTRIAN FACILITIES

The County of Riverside and City of Riverside bike networks are shown on Exhibit 3-5 and Exhibit 3-6, respectively. As shown on Exhibit 3-6, there is a planned Combination Trail (Regional Trail and Class I Bike Path proposed along La Sierra Avenue and El Sobrante Road. There is a proposed Regional Trail (Urban/Suburban) proposed along McAllister Street and a Community Trail proposed in the vicinity of the Project site.

Exhibit 3-7 illustrates the existing crosswalks throughout the study area. As shown on Exhibit 3-7, there are pedestrian facilities in place in the vicinity of the Project site along portions of McAllister Street and El Sobrante Road.

3.5 TRANSIT SERVICE

The study area is currently served by Riverside Transit Agency (RTA). There are currently no transit routes or stops along El Sobrante Road near the proposed Project. The transit services are illustrated on Exhibit 3-8. Transit service is reviewed and updated by RTA periodically to address ridership, budget, and community demand needs. Changes in land use can affect these periodic adjustments which may lead to either enhanced or reduced service where appropriate.

3.6 EXISTING (2024) TRAFFIC COUNTS

The intersection LOS analysis is based on the traffic volumes observed during the peak hour conditions using traffic count data collected in April 2024 when local schools were in session and operating on normal bell schedules. The following peak hours were selected for analysis:

- Weekday AM Peak Hour (peak hour between 7:00 AM and 9:00 AM)
- Weekday PM Peak Hour (peak hour between 4:00 PM and 6:00 PM)

Local schools were in session and operating on normal bell schedules at the time traffic counts were collected. Construction activity was occurring at the intersection of McAllister Street at El Sobrante Road (#7); however, the usual number of lanes were not affected. The raw manual peak hour turning movement traffic count data sheets are included in Appendix 3.1.

Existing weekday ADT volumes on arterial highways throughout the study area are shown on Exhibit 3-9. Existing ADT volumes were based upon factored intersection peak hour counts collected by Urban Crossroads, Inc. using the following formula for each intersection leg:

Weekday PM Peak Hour (Approach Volume + Exit Volume) x 10.57 = Leg Volume

A comparison of the PM peak hour and daily traffic volumes of various roadway segments within the study area indicated that the peak-to-daily relationship is approximately 9.46 percent. As such, the above equation utilizing a factor of 10.57 estimates the ADT volumes on the study area roadway segments assuming a peak-to-daily relationship of approximately 9.46 percent (i.e., 1/0.0946 = 10.57) and was assumed to sufficiently estimate ADT volumes for planning-level analyses. This factor is consistent with that used for other traffic studies within the study area. Existing weekday AM and weekday PM peak hour intersection volumes are shown on Exhibit 3-9.

EXHIBIT 3-5 : COUNTY OF RIVERSIDE GENERAL PLAN BIKE NETWORK

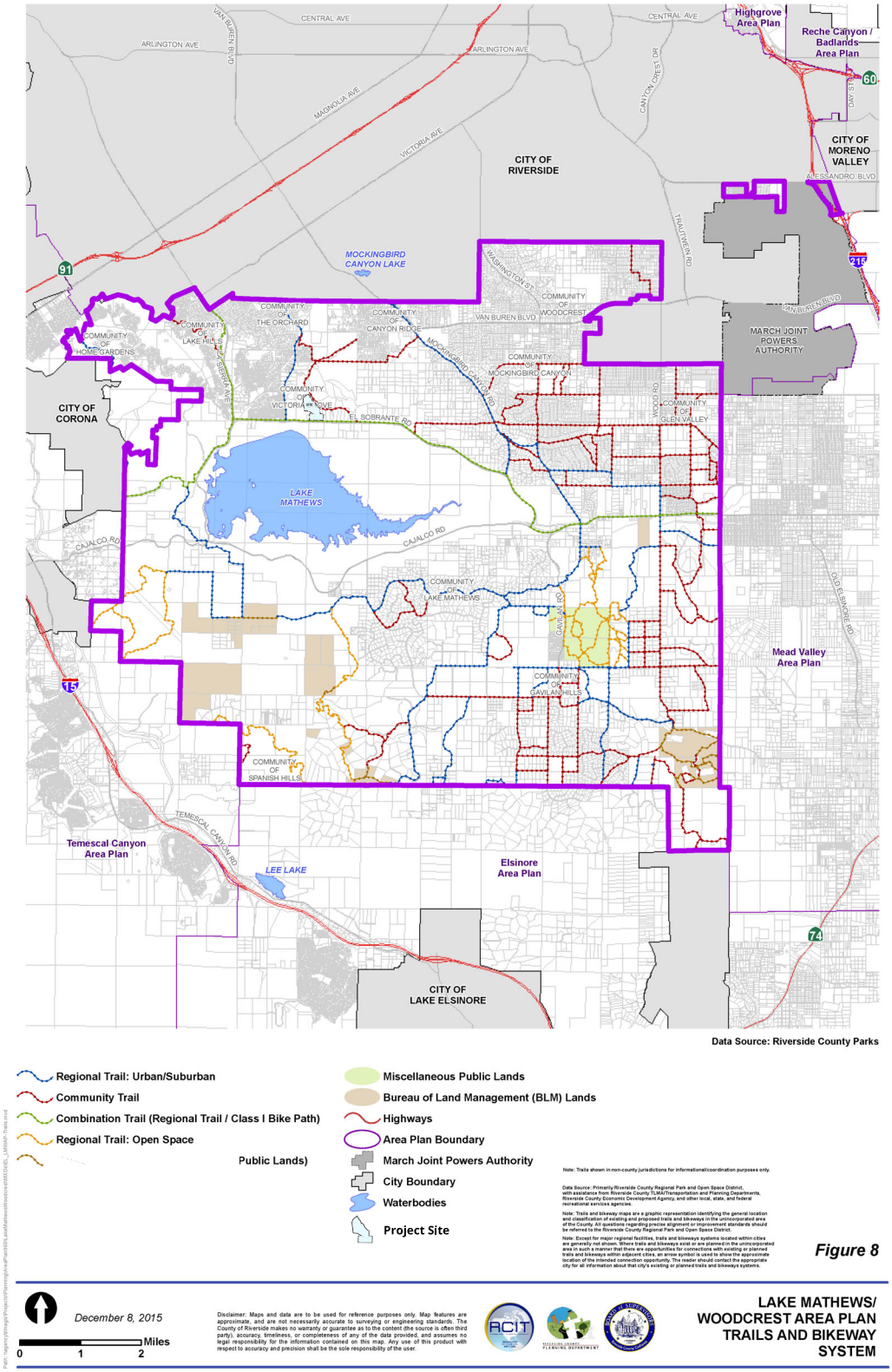

EXHIBIT 3-6 : CITY OF RIVERSIDE BIKE PLAN

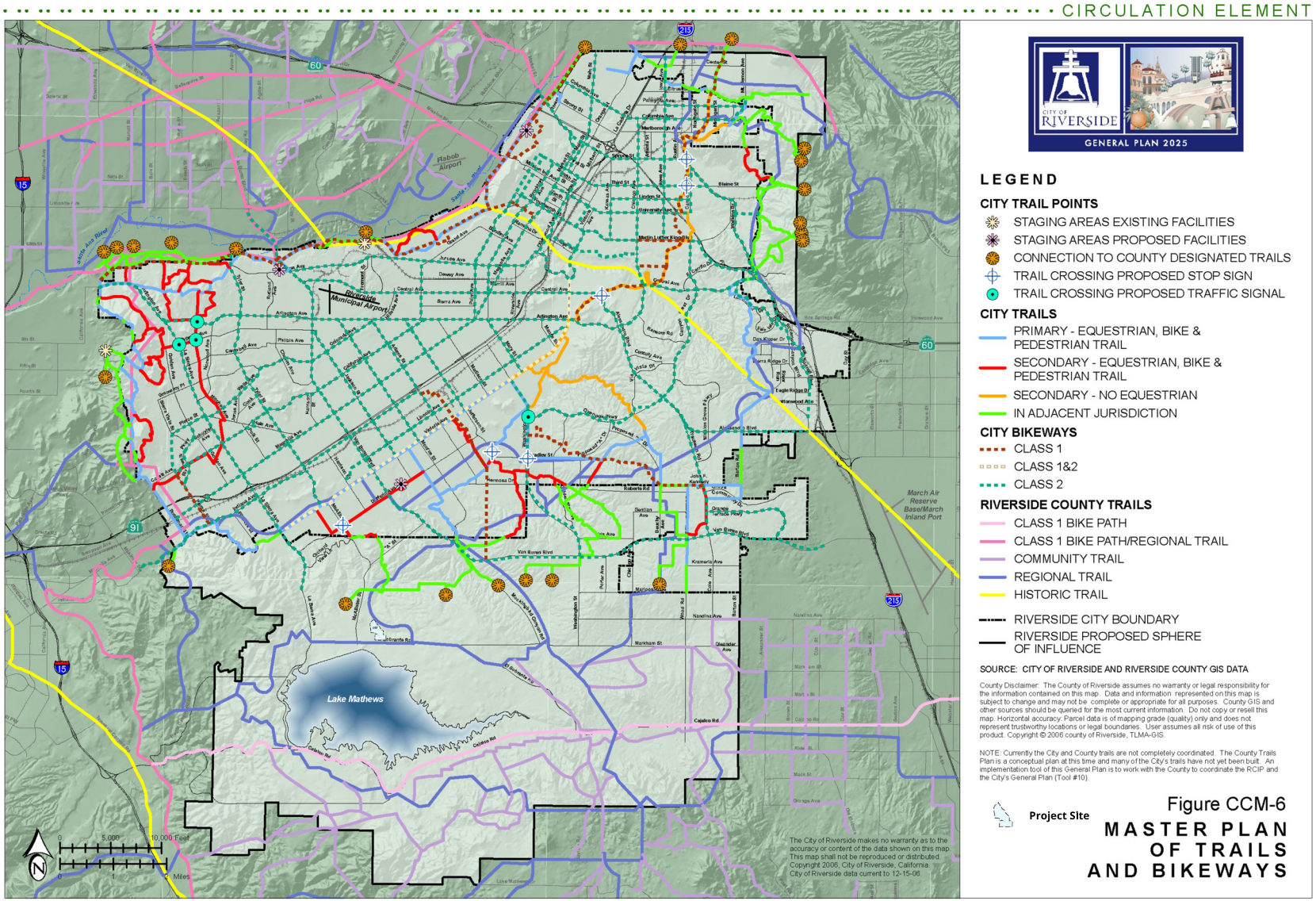

15858.dwg bike

EXHIBIT 3-7 : EXISTING PEDESTRIAN FACILITIES

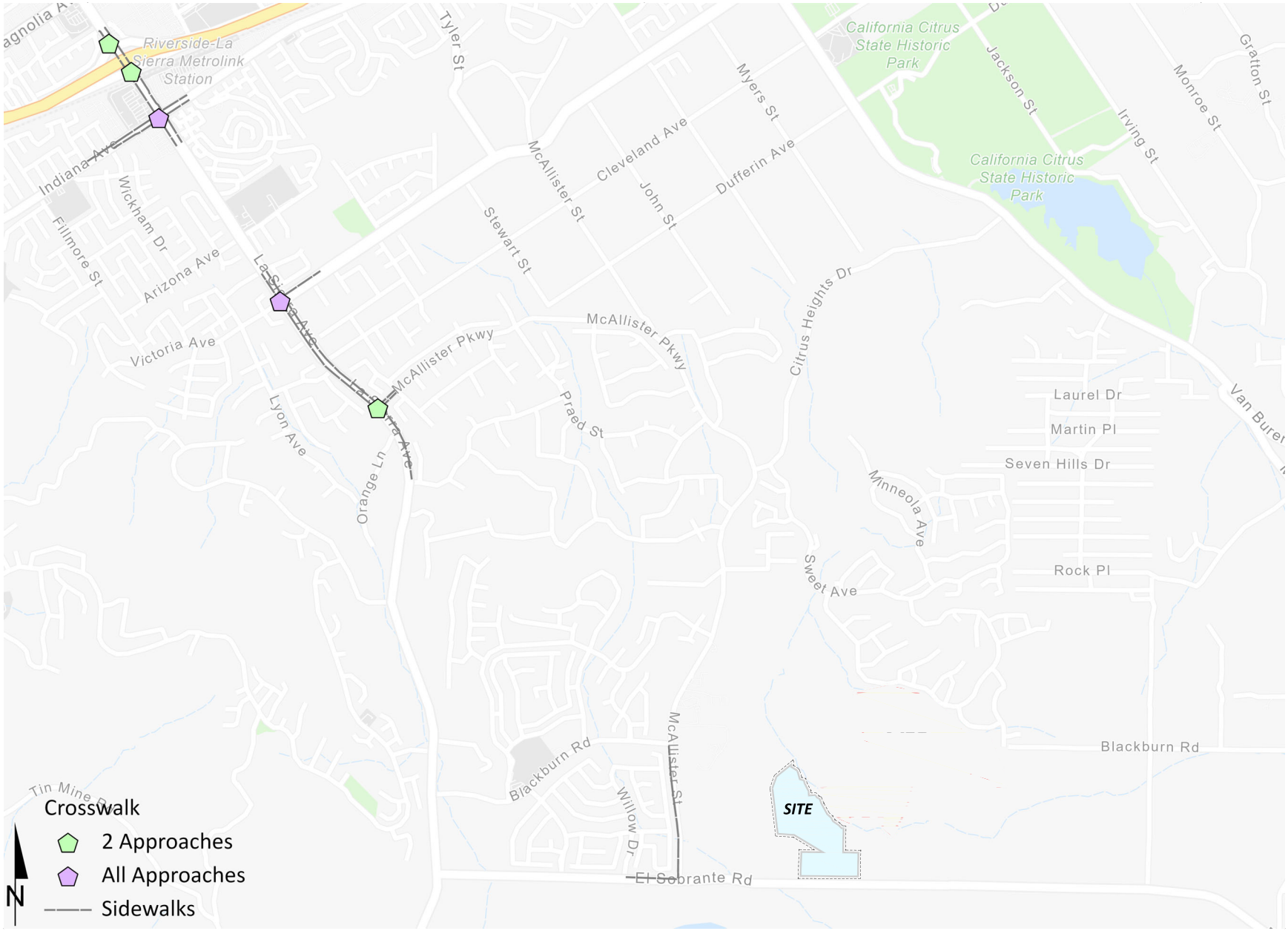

15858.dwg ped

EXHIBIT 3-8 : EXISTING TRANSIT ROUTES

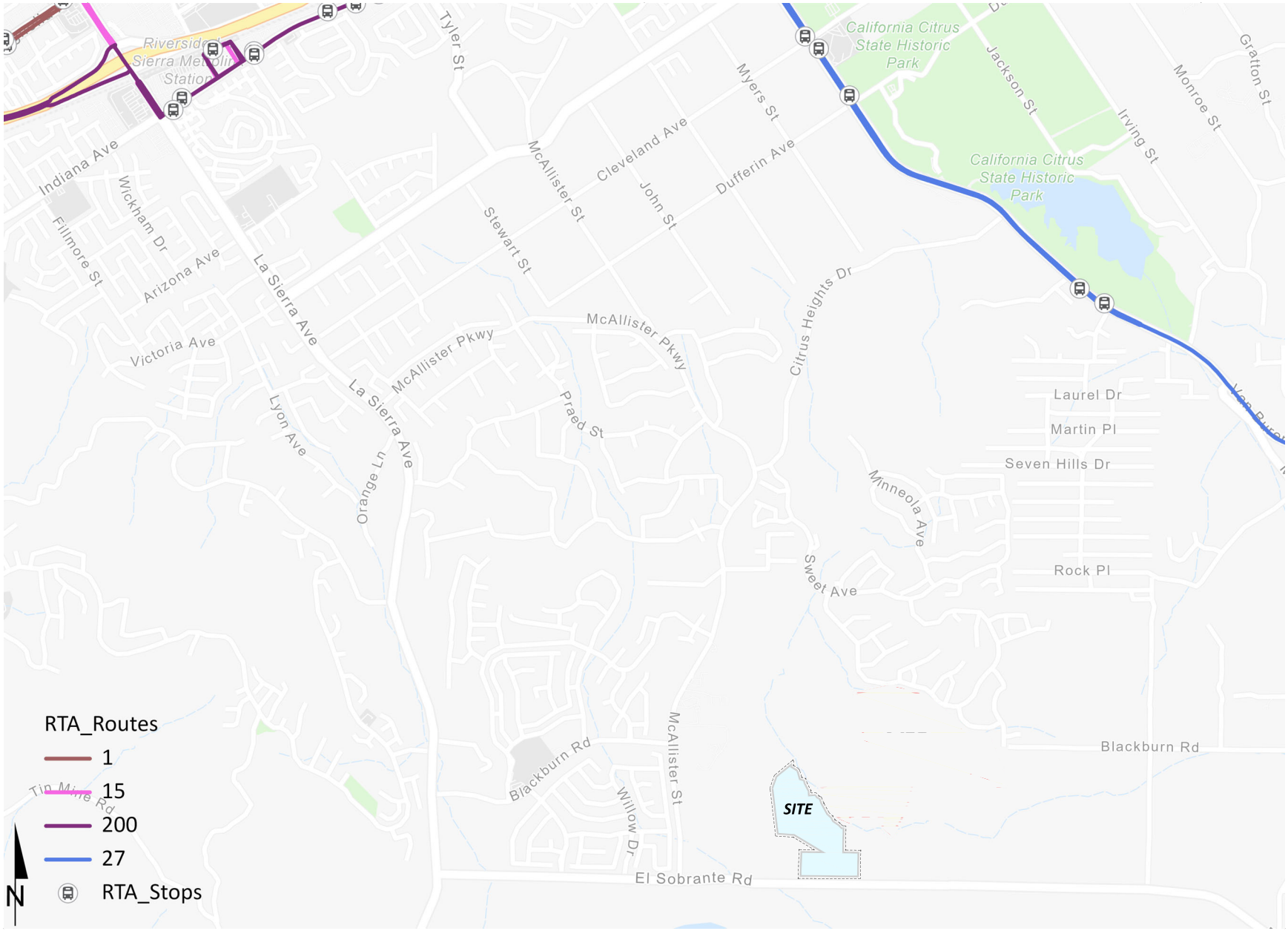

15858.dwg transit

EXHIBIT 3-9 : EXISTING (2024) TRAFFIC VOLUMES

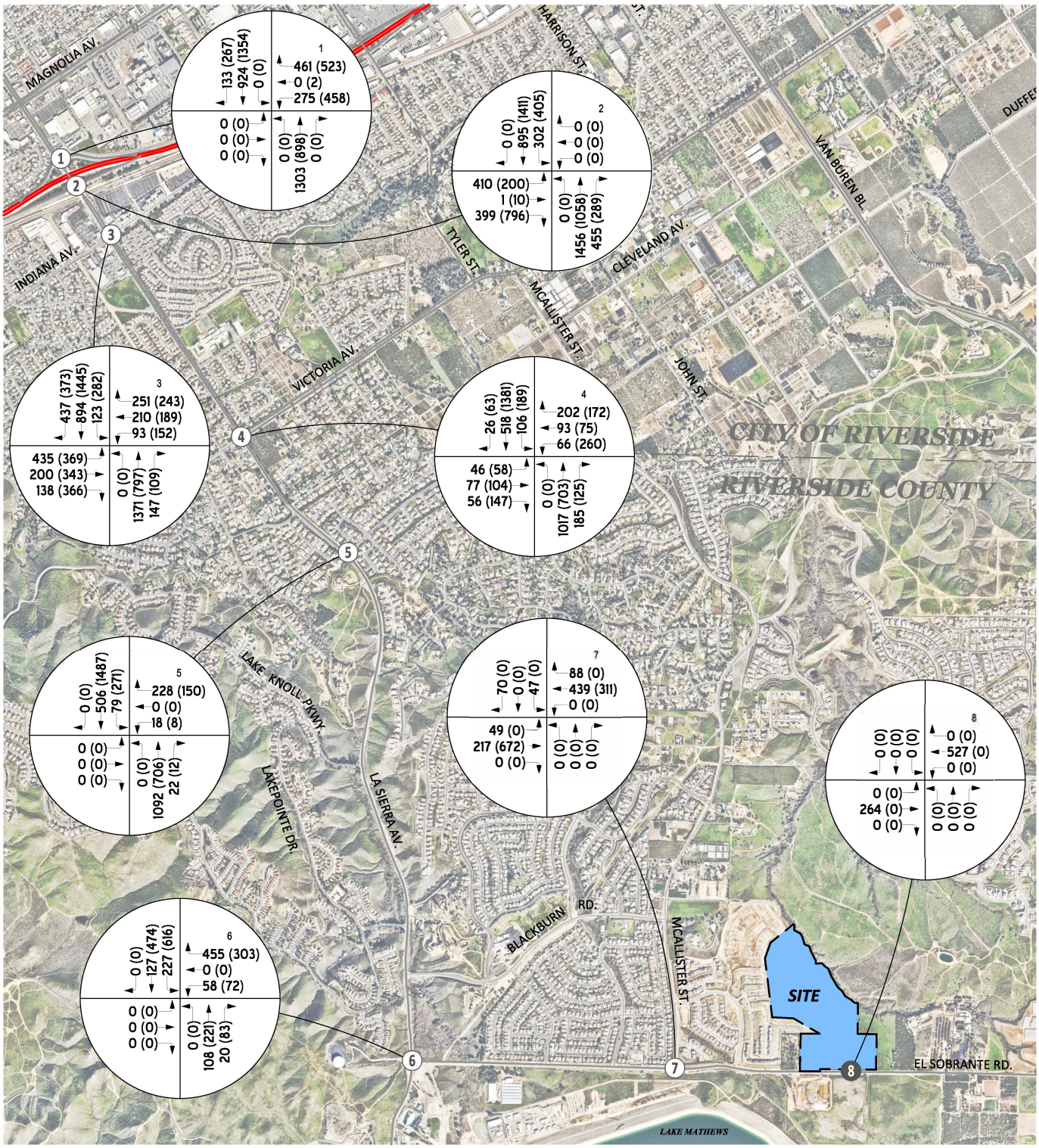

LEGEND

(0) = *Existing Intersection Analysis Location*

0 = *Future Intersection Analysis Location*

00 (00) = *Peak Hour Intersection Volume AM (PM)*

##.# = *Average Daily Trips (1000's)*

15858 vol.dwg - ex

3.7 INTERSECTION OPERATIONS ANALYSIS

Existing peak hour traffic operations have been evaluated for the study area intersections based on the analysis methodologies presented in Section 2.2 *Intersection Capacity Analysis* of this report. The intersection operations analysis results are summarized in Table 3-1, which indicates that all existing study area intersections are currently operating at acceptable LOS during the peak hours, with the exception of the following intersections:

- La Sierra Avenue & El Sobrante Road (#6) – LOS F PM peak hour only
- McAllister Street & El Sobrante Road (#7) – LOS E PM peak hour only

The intersection operations analysis worksheets are included in Appendix 3.2 of this TA.

TABLE 3-1: INTERSECTION ANALYSIS FOR EXISTING (2024) CONDITIONS

#	Intersection	Traffic Control[2]	Delay[1] (secs.) AM	Delay[1] (secs.) PM	Level of Service AM	Level of Service PM
1	La Sierra Av. & SR-91 WB Ramps	TS	17.9	20.0	B	C
2	La Sierra Av. & SR-91 EB Ramps	TS	22.0	27.8	C	C
3	La Sierra Av. & Indiana Av.	TS	31.8	34.9	C	C
4	La Sierra Av. & Victoria Av.	TS	23.0	36.0	C	D
5	La Sierra Av. & McAllister St.	TS	11.6	10.2	B	B
6	La Sierra Av. & El Sobrante Rd.	AWS	16.3	**75.3**	C	**F**
7	McAllister St. & El Sobrante Rd.	AWS	10.7	**39.4**	B	**E**
8	Street A & El Sobrante Rd.		Future Intersection			

* BOLD = Level of Service (LOS) does not meet the applicable jurisdictional requirements (i.e., unacceptable LOS).

[1] Per the Highway Capacity Manual (7th Edition), overall average intersection Delay and level of service are shown for intersections with a traffic signal or all way stop control. For intersections with cross street stop control, the delay and level of service for the worst individual movement (or movements sharing a single lane) are shown. HCM delay reported in seconds.

[2] TS = Traffic Signal; AWS = All-way Stop

3.8 TRAFFIC SIGNAL WARRANTS ANALYSIS

Traffic signal warrants for Existing traffic conditions are based on existing peak hour intersection turning volumes. The following unsignalized study area intersections currently meet a peak hour traffic signal under Existing traffic conditions:

- La Sierra Avenue & El Sobrante Road (#6)
- McAllister Street & El Sobrante Road (#7)

Existing conditions traffic signal warrant analysis worksheets are provided in Appendix 3.3.

3.9 QUEUING ANALYSIS

A queuing analysis was performed for all movements at signalized study area intersections. Queuing analysis findings are presented in Table 3-2. As shown in Table 3-2, the following movements currently experience queuing issues during the weekday AM or weekday PM peak 95th percentile traffic flows:

- La Sierra Avenue & SR-91 WB Ramps (#1), northbound left turn lane – AM and PM peak hours
- La Sierra Avenue & SR-91 WB Ramps (#1), southbound through lane – PM peak hour only
- La Sierra Avenue & SR-91 EB Ramps (#2), southbound left turn lane – PM peak hour only
- La Sierra Avenue & Indiana Avenue (#3), northbound left turn lane – AM peak hour only
- La Sierra Avenue & Indiana Avenue (#3), eastbound left turn lane – AM and PM peak hours
- La Sierra Avenue & Indiana Avenue (#3), eastbound right turn lane – PM peak hour only
- La Sierra Avenue & Victoria Avenue (#4), southbound left turn lane – PM peak hour only
- La Sierra Avenue & Victoria Avenue (#4), westbound left turn lane – PM peak hour only
- La Sierra Avenue & McAllister Parkway (#5), southbound left turn lane – PM peak hour only

It should be noted that the Simtraffic maximum queues have been reported at the request of the County. However, improvements have been identified to address the 95th percentile queueing deficiencies. Worksheets for Existing (2024) traffic conditions off-ramp queuing analysis are provided in Appendix 3.4.

TABLE 3-2: PEAK HOUR QUEUING SUMMARY FOR EXISTING (2024) CONDITIONS

Intersection	Movement	Available Stacking Distance (Feet)	Synchro: 95th Percentile Queue (Feet)		Acceptable?[1]		Simtraffic: Maximum Queue (Feet)	
			AM Peak Hour	PM Peak Hour	AM	PM	AM Peak Hour	PM Peak Hour
La Sierra Av. & SR-91 WB Ramps (#1)	NBL	150	**271**	**176**	**No**	**No**	357	281
	NBT	450	313	251	Yes	Yes	285	238
	SBT	300	245	**342**	Yes	**No**	458	664
	SBR	150	49	96	Yes	Yes	123	187
	WBL	500	226	300	Yes	Yes	238	298
	WBT	1,200	187	235	Yes	Yes	307	363
	WBR	500	180	197	Yes	Yes	268	304
La Sierra Av. & SR-91 EB Ramps (#2)	NBT	900	359	284	Yes	Yes	475	367
	NBR	415	61	62	Yes	Yes	269	144
	SBL	150	120	**188** [2]	Yes	**No**	212	218
	SBT	450	29	281	Yes	Yes	212	322
	EBL	1,690	252	128	Yes	Yes	289	127
	EBT	1,690	218	346	Yes	Yes	468	373
	EBR	450	153	290	Yes	Yes	400	314
La Sierra Av. & Indiana Av. (#3)	NBL	200	**234** [2]	174 [2]	**No**	Yes	274	174
	NBT	590	508 [2]	254	Yes	Yes	594	262
	NBR	315	49	44	Yes	Yes	142	88
	SBL	355	111 [2]	207 [2]	Yes	Yes	129	249
	SBT	900	312	542 [2]	Yes	Yes	242	389
	SBR	540	91	72	Yes	Yes	280	221
	EBL	205	**294** [2]	**263** [2]	**No**	**No**	260	260
	EBT	1,010	84	151	Yes	Yes	256	316
	EBR	205	41	**236**	Yes	**No**	91	243
	WBL	200	70	101	Yes	Yes	122	122
	WBT	535	101	91	Yes	Yes	150	129
	WBR	130	122	116	Yes	Yes	181	151
La Sierra Av. & Victoria Av. (#4)	NBL	210	73	55	Yes	Yes	162	158
	NBT	1,300	578	397	Yes	Yes	388	332
	SBL	210	187 [2]	**301** [2]	Yes	**No**	188	274
	SBT	1,310	202	841 [2]	Yes	Yes	205	553
	EBL	130	41	48	Yes	Yes	81	112
	EBT	325	98	121	Yes	Yes	130	151
	EBR	325	7	30	Yes	Yes	60	135
	WBL	200	129 [2]	**412** [2]	Yes	**No**	122	290
	WBT	530	111	81	Yes	Yes	128	314
	WBR	200	89	50	Yes	Yes	151	210
La Sierra Av. & McAllister St. (#5)	NBT	1,475	436	306	Yes	Yes	272	213
	NBR	200	16	14	Yes	Yes	35	31
	SBL	150	114	**280**	Yes	**No**	125	275
	SBT	1,065	107	431	Yes	Yes	136	269
	WBL	150	32	19	Yes	Yes	46	24
	WBR	400	62	53	Yes	Yes	135	82

[1] Stacking distance is acceptable if the required stacking distance is less than or equal to the stacking distance provided for the 95th percentile queue only. An additional 15 feet of stacking which is assumed to be provided in the transition for turn pockets is reflected in the stacking distance shown on this table, where applicable.

[2] 95th percentile volume exceeds capacity, queue may be longer. Queue shown is maximum after two cycles.

3.10 PROJECT DEFICIENCIES AND RECOMMENDED IMPROVEMENTS

This section provides a summary of Project deficiencies and recommended improvements based on the County of Riverside deficiency criteria discussed in Section 2.6 *Deficiency Criteria*.

3.10.1 INTERSECTIONS

Intersection improvements necessary to improve project-related traffic deficiencies are shown in Table 3-3. The improvements have been identified to improve the deficiencies back to acceptable levels. Worksheets for Existing (2024) conditions, with improvements, HCM calculation worksheets are provided in Appendix 3.5.

TABLE 3-3: INTERSECTION ANALYSIS FOR EXISTING (2024) CONDITIONS WITH IMPROVEMENTS

			Intersection Approach Lanes[1]												Delay[2] (secs.)		Level of Service	
		Traffic	Northbound			Southbound			Eastbound			Westbound						
#	Intersection	Control[3]	L	T	R	L	T	R	L	T	R	L	T	R	AM	PM	AM	PM
6	La Sierra Av. & El Sobrante Rd.																	
	- Without Improvements	AWS	0	2	0	1	1	0	0	0	0	0	1	0	16.3	**75.3**	C	**F**
	- With Improvements	**TS**	0	2	0	1	1	0	0	0	0	0	1	0	17.2	21.8	B	C
7	McAllister St. & El Sobrante Rd.																	
	- Without Improvements	AWS	0	0	0	0	1	0	1	1	0	0	2	0	10.7	**39.4**	B	**E**
	- With Improvements	**TS**	0	0	0	0	1	0	1	1	0	0	2	0	8.5	8.1	A	A

BOLD = LOS does not meet the applicable jurisdictional requirements (i.e., unacceptable LOS).

[1] When a right turn is designated, the lane can either be striped or unstriped. To function as a right turn lane there must be sufficient width for right turning vehicles to travel outside the through lanes.

L = Left; T = Through; R = Right; **1** = Improvement

[2] Per the Highway Capacity Manual (7th Edition), overall average intersection Delay and level of service are shown for intersections with a traffic signal or all way stop control. For intersections with cross street stop control, the delay and level of service for the worst individual movement (or movements sharing a single lane) are shown. HCM delay reported in seconds.

[3] TS = Traffic Signal; AWS = All-way Stop; **TS** = Improvement

3.10.2 QUEUES

Improvements to address queuing deficiencies have been identified where feasible and are shown in Table 3-4. Improvements have not been identified at the following movements, as improvements are not considered feasible due to physical constraints on the existing roadways:

- La Sierra Avenue & SR-91 westbound Ramps (#1), northbound left turn lane
- La Sierra Avenue & SR-91 westbound Ramps (#1), southbound through lane
- La Sierra Avenue & SR-91 eastbound Ramps (#2), southbound left turn lane
- La Sierra Avenue & Indiana Avenue (#3), eastbound left turn lane

TABLE 3-4: PEAK HOUR QUEUING SUMMARY FOR EXISTING (2024) CONDITIONS WITH IMPROVEMENTS

Intersection	Movement	Available Stacking Distance (Feet)[3]	Synchro: 95th Percentile Queue (Feet) AM Peak Hour	Synchro: 95th Percentile Queue (Feet) PM Peak Hour	Acceptable? [1] AM	Acceptable? [1] PM
La Sierra Av. & Indiana Av. (#3)	NBL	**325**	234 [2]	174 [2]	Yes	Yes
La Sierra Av. & Victoria Av. (#4)	SBL	**325**	187 [2]	301 [2]	Yes	Yes
	WBL	**500**	129 [2]	412 [2]	Yes	Yes
La Sierra Av. & McAllister St. (#5)	SBL	**400**	137	280	Yes	Yes

[1] Stacking Distance is acceptable if the required stacking distance is less than or equal to the stacking distance provided for the 95th percentile queue only. An additional 15 feet of stacking which is assumed to be provided in the transition for turn pockets is reflected in the stacking distance shown on this table, where applicable.

[2] 95th percentile volume exceeds capacity, queue may be longer. Queue shown is maximum after two cycles.

[3] **100** = Improvement

4 PROJECTED FUTURE TRAFFIC

This section presents the traffic volumes estimated to be generated by the Project, as well as the Project's trip assignment onto the study area roadway network. The Project is anticipated to have an Opening Year of 2030. The Project includes the development of 128 single-family detached residential dwelling units. Primary access to the Project site will be accommodated via a new connection to El Sobrante Road (via Street A). Street A at El Sobrante Road is assumed to allow for full access (no left turn restrictions). Regional access to the Project site is available from the SR-91 Freeway via the La Sierra Avenue interchange.

4.1 PROJECT TRIP GENERATION

4.1.1 PROPOSED PROJECT TRIP GENERATION

Trip generation represents the amount of traffic which is both attracted to and produced by a development. Determining traffic generation for a specific project is therefore based upon forecasting the amount of traffic that is expected to be both attracted to and produced by the specific land uses being proposed for a given development. In order to develop the traffic characteristics of the proposed Project, trip-generation statistics published in the ITE Trip Generation Manual (11th Edition, 2021) for Single Family Detached Residential (ITE Land Use Code 210) was used to calculate the trip generation. (5)

The trip generation summary illustrating daily and peak hour trip generation estimates for the proposed Project are shown in Table 4-1. The Project is anticipated to generate 1,208 two-way trip-ends per day with 89 AM peak hour trips and 121 PM peak hour trips.

TABLE 4-1: PROJECT TRIP GENERATION SUMMARY

Land Use[1]	Units[2]	ITE LU Code	AM Peak Hour In	AM Peak Hour Out	AM Peak Hour Total	PM Peak Hour In	PM Peak Hour Out	PM Peak Hour Total	Daily
Single Family Detached Residential	DU	210	0.18	0.52	0.70	0.59	0.35	0.94	9.43

[1] Trip Generation Source: Institute of Transportation Engineers (ITE), Trip Generation Manual, Eleventh Edition (2021).

[2] DU = Dwelling Units

Land Use	Quantity	Units[1]	AM Peak Hour In	AM Peak Hour Out	AM Peak Hour Total	PM Peak Hour In	PM Peak Hour Out	PM Peak Hour Total	Daily
Highland Grove II (TTM No. 38910)	128	DU	23	66	89	76	45	121	1,208

[1] DU = Dwelling Units

4.2 PROJECT TRIP DISTRIBUTION

The Project trip distribution represents the directional orientation of traffic to and from the Project site. Trip distribution is the process of identifying the probable destinations, directions, or traffic routes that will be utilized by Project traffic. The potential interaction between the planned land uses and surrounding regional access routes are considered, to identify the route where the Project traffic would distribute. Exhibit 4-1 shows the Project trip distribution patterns. Project trip distribution patterns are based on traffic counts from 2023 for the applicable study area intersections (Attachment B of the Scoping Agreement in Appendix 1.1)

4.3 MODAL SPLIT

The potential for Project trips (non-truck) to be reduced by the use of public transit, walking, or bicycling have not been included as part of the Project's estimated trip generation. Essentially, the Project's traffic projections are "conservative" in that these alternative travel modes would reduce the forecasted traffic volumes.

4.4 PROJECT TRIP ASSIGNMENT

The assignment of traffic from the Project area to the adjoining roadway system is based upon the Project trip generation, trip distribution, and the arterial highway and local street system improvements that would be in place by the time of initial occupancy of the Project. Based on the identified Project traffic generation and trip distribution patterns, the Project only ADT and peak hour intersection turning movement volumes are shown on Exhibit 4-2.

4.5 BACKGROUND TRAFFIC

Future year traffic forecasts have been based upon background (ambient) growth at 2% per year, compounded annually, for 2030 conditions. The total ambient growth is 12.62% for 2030 traffic conditions (compounded growth of 2 percent per year over 6 years or $1.02^{6\ years}$). The ambient growth factor is intended to approximate regional traffic growth. This ambient growth rate is added to existing traffic volumes to account for area-wide growth not reflected by cumulative development projects. Ambient growth has been added to daily and peak hour traffic volumes on surrounding roadways, in addition to traffic generated by the development of future projects that have been approved but not yet built and/or for which development applications have been filed and are under consideration by governing agencies.

EXHIBIT 4-1 : PROJECT TRIP DISTRIBUTION

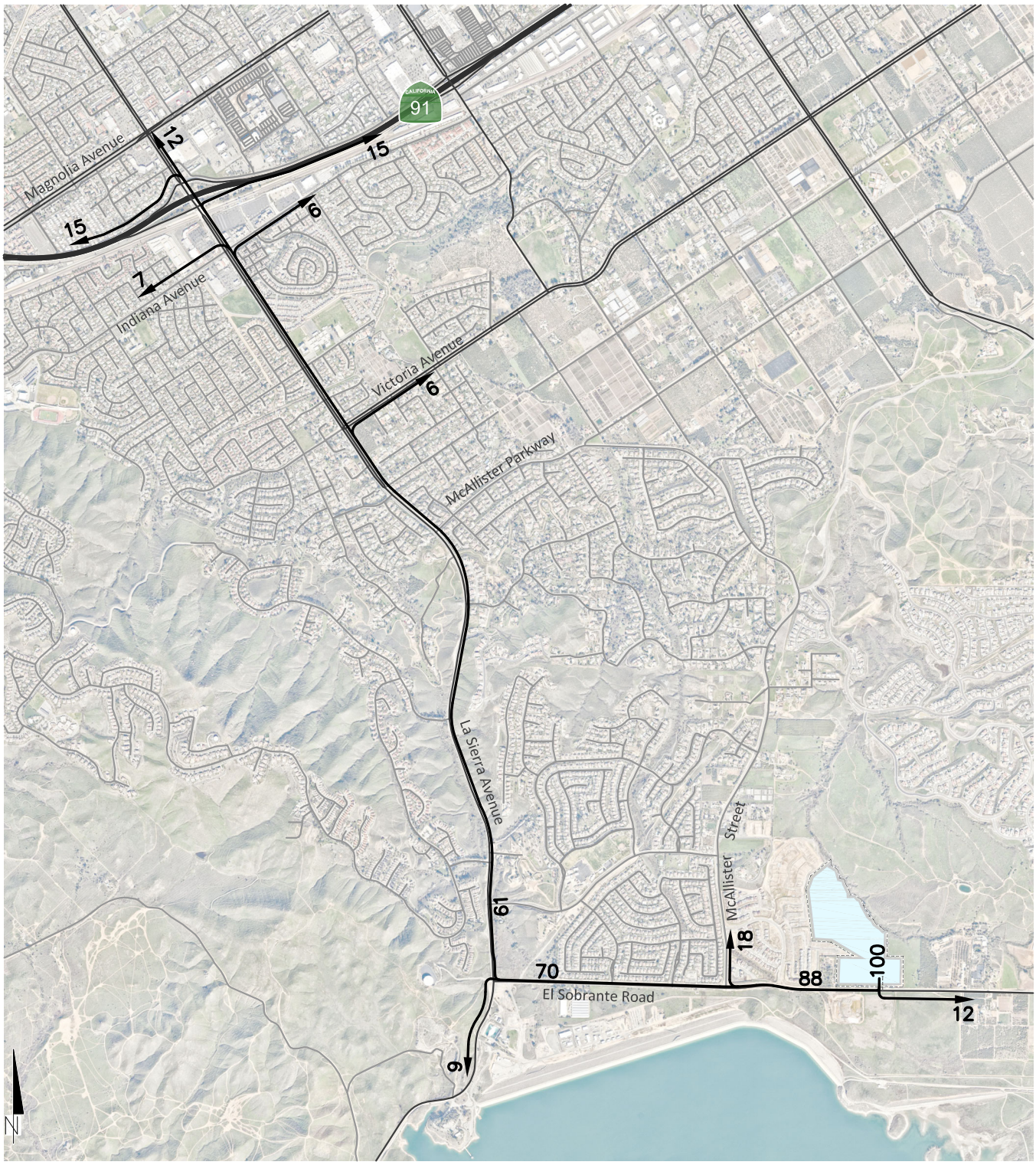

LEGEND

10 = *Percent To/From Project*

→ = *Trip Distribution*

EXHIBIT 4-2 : PROJECT ONLY TRAFFIC VOLUMES

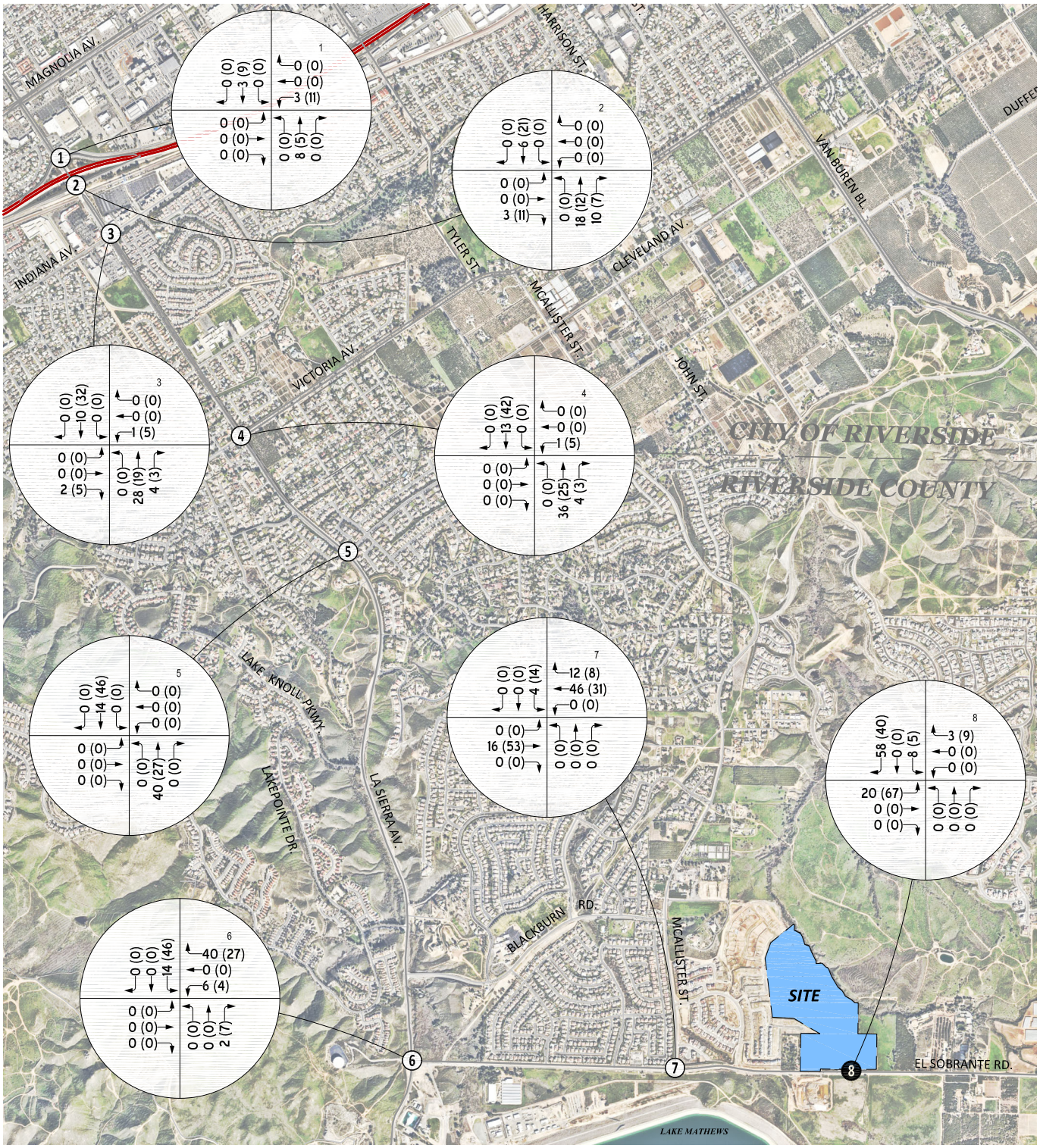

LEGEND

(0) = *Existing Intersection Analysis Location*

0 = *Future Intersection Analysis Location*

00 (00) = *Peak Hour Intersection Volume AM (PM)*

##.# = *Average Daily Trips (1000's)*

4.6 CUMULATIVE DEVELOPMENT TRAFFIC

A cumulative project list was developed for the purposes of this analysis through consultation with planning and engineering staff from the County of Riverside and City of Riverside. The cumulative project list includes known and foreseeable projects that are anticipated to contribute traffic to the study area intersections.

Where applicable, cumulative projects anticipated to contribute measurable traffic (i.e., 50 or more peak hour trips) to study area intersections have been manually added to the study area network to generate EAPC forecasts. In other words, this list of cumulative development projects has been reviewed to determine which projects would likely contribute measurable traffic through the study area intersections (e.g., those cumulative projects in close proximity to the proposed Project). For the purposes of this analysis, the cumulative projects that were determined to affect one or more of the study area intersections are shown on Exhibit 4-3, listed in Table 4-2, and have been considered for inclusion. Any additional traffic generated by other projects not on the cumulative projects list is likely accounted for through background ambient growth factors that have been applied to the peak hour volumes at study area intersections as discussed in Section 4.5 *Background Traffic*. Cumulative Only ADT and peak hour intersection turning movement volumes are shown on Exhibit 4-4.

TABLE 4-2: CUMULATIVE DEVELOPMENT LAND USE SUMMARY

No.	Project Name	Land Use[1]	Quantity	Units[2]
County of Riverside				
RC1	PM37227	Single Family Residential	9	DU
RC2	Highland Grove Vistas 4 (TTM No. 38927)	Single Family Residential	206	DU
RC3	TTM38520	Single Family Residential	45	DU
RC4	Greentree (TTM No. 38605)	Single Family Residential	163	DU
City of Riverside				
R1	P13-0165, P13-0166, P13-0167, P13-0168	Gas Sation w/ Car Wash	16.0	AC
R2	P18-0600	Retail/Restaurant w/ Drive Thru	4.494	TSF
R3	PR-2021-001151	Apartment Units & Dental Office	8.139	TSF
R4	P19-0410, P19-0411, P19-0412	Single Family Residential	34	DU
R5	PR-2023-001476	Coffee Shop w/ Drive-Thru (Starbucks)	2.300	TSF
R6	P18-0396, P18-0370	Multi-Family Residential	57	DU
R7	PR-2021-000713	Hospital Tower Expansion	318.433	TSF
R8	PR-2022-001468	Multi-Family Residential	38	DU
R9	P19-0863	Multi-Family Residential	450	DU
		Commercial Retail	9.000	TSF
R10	P14-0176	Single Family Residential	14	DU

[1] TSF = Thousand Square Feet; DU = Dwelling Units; AC = Acres

EXHIBIT 4-3 : CUMULATIVE DEVELOPMENT LOCATION MAP



15858.dwg cd

EXHIBIT 4-4 : CUMULATIVE ONLY TRAFFIC VOLUMES

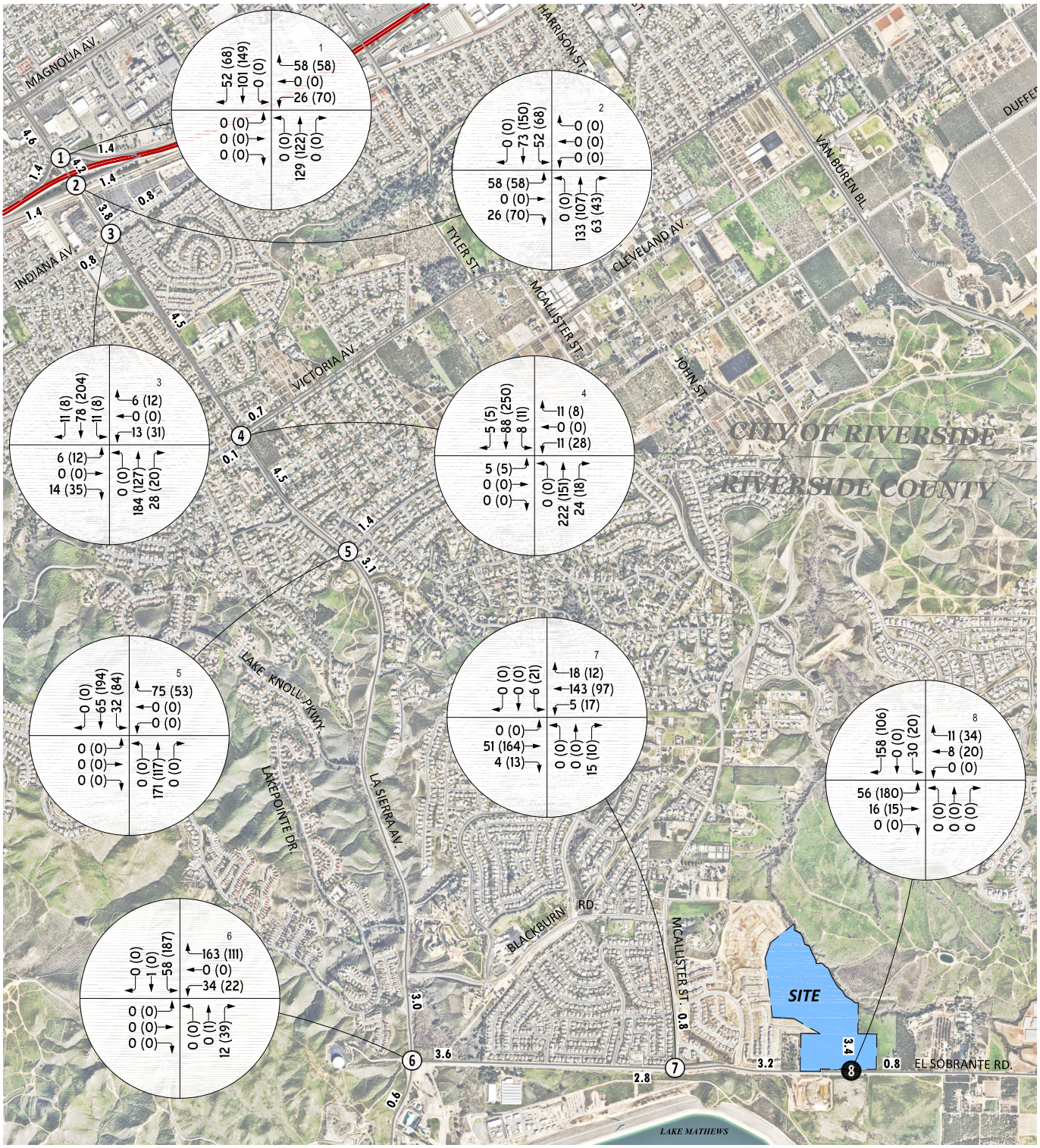

LEGEND

⓪ = *Existing Intersection Analysis Location*	00 (00) = *Peak Hour Intersection Volume AM (PM)*
⓿ = *Future Intersection Analysis Location*	##.# = *Average Daily Trips (1000's)*

This page intentionally left blank

5 EAP (2030) TRAFFIC CONDITIONS

This section discusses the traffic forecasts for EAP (2030) conditions and the resulting intersection operations, traffic signal warrant, and queuing analyses.

5.1 ROADWAY IMPROVEMENTS

The lane configurations and traffic controls assumed to be in place for EAP (2030) conditions are consistent with those shown previously on Exhibit 3-1, with the exception of the following:

- Project driveways and those facilities assumed to be constructed by the Project to provide site access are also assumed to be in place for EAP conditions only (e.g., intersection and roadway improvements at the Project's frontage and driveways).

5.2 EAP (2030) TRAFFIC VOLUME FORECASTS

5.2.1 EAP (2030) (PROJECT ONLY) GROWTH TRAFFIC VOLUME FORECASTS

This scenario includes Existing (2024) traffic volumes plus an ambient growth factor of 12.62% and the addition of Project traffic. The weekday ADT volumes and peak hour volumes which can be expected for EAP (2030) (Project only) traffic conditions are shown on Exhibit 5-1.

5.2.2 EAP (2030) (PROJECT PLUS HIGHLAND GROVE IV PLUS GREENTREE) GROWTH TRAFFIC VOLUME FORECASTS

This scenario includes Existing (2024) traffic volumes plus an ambient growth factor of 12.62%, the addition of Project traffic, the addition of traffic from the Highland Grove IV and Greentree developments. The weekday ADT volumes and peak hour volumes which can be expected for EAP (2030) (Project plus Highland Grove IV plus Greentree) traffic conditions are shown on Exhibit 5-2.

5.3 INTERSECTION OPERATIONS ANALYSIS

EAP (2030) peak hour traffic operations have been evaluated for the study area intersections based on the analysis methodologies presented in Section 2 Methodologies of this TA. The intersection analysis results are summarized in Table 5-1 for EAP traffic conditions, which indicate that all of the study area intersections are anticipated to continue to operate at an acceptable LOS under EAP (2030) (Project only) traffic conditions, with the exception of the following intersections:

- La Sierra Avenue & El Sobrante Road (#6) – LOS F PM peak hour only
- McAllister Street & El Sobrante Road (#7) – LOS F PM peak hour only

EXHIBIT 5-1 : EAP (2030) TRAFFIC VOLUMES

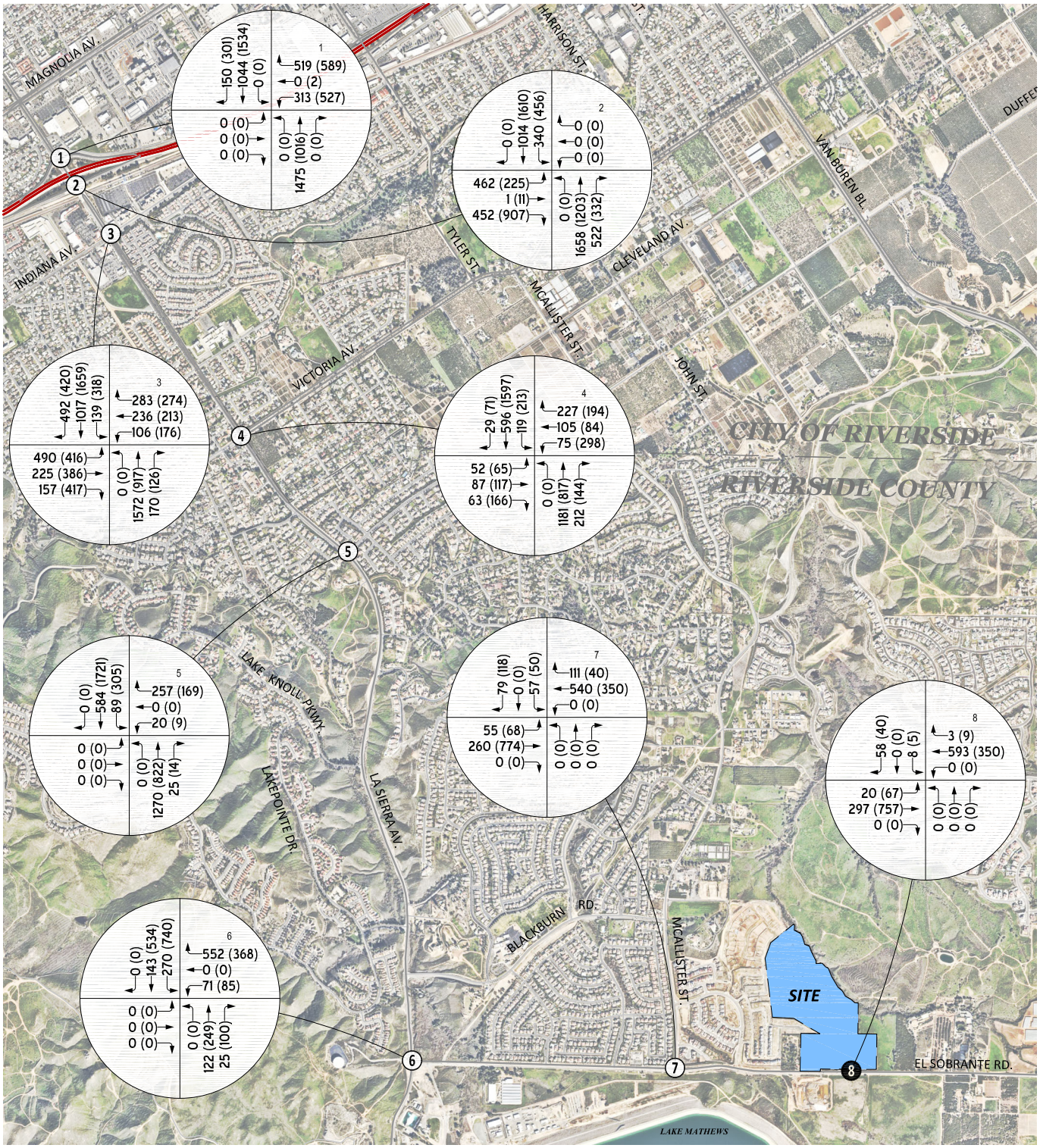

LEGEND

(0) = *Existing Intersection Analysis Location*	**00 (00)** = *Peak Hour Intersection Volume AM (PM)*
0 = *Future Intersection Analysis Location*	*##.#* = *Average Daily Trips (1000's)*

EXHIBIT 5-2 : EAP (2030) (PLUS HIGHLAND GROVE IV PLUS GREENTREE) TRAFFIC VOLUMES

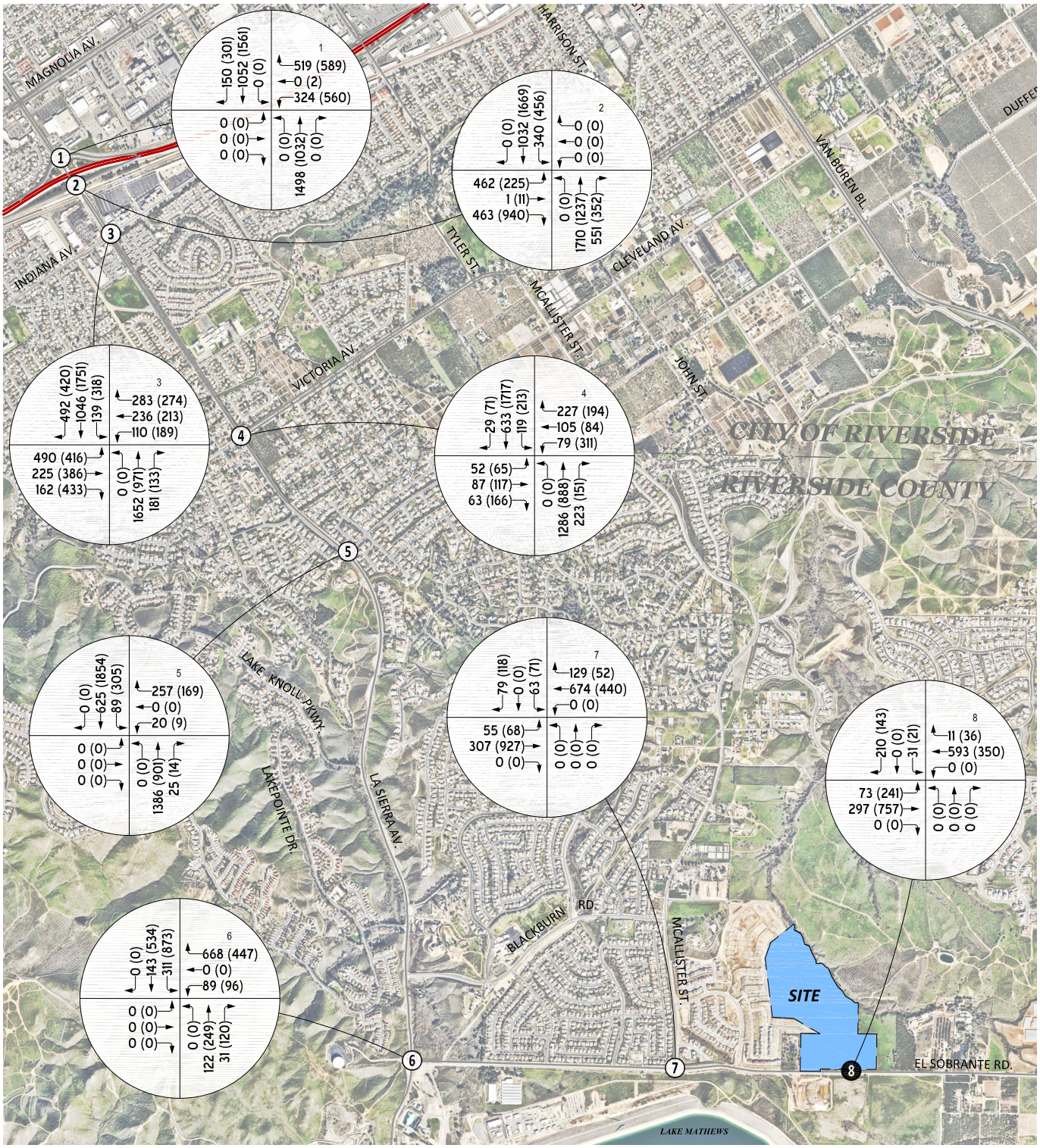

LEGEND

① = *Existing Intersection Analysis Location*

⓪ = *Future Intersection Analysis Location*

00 (00) = *Peak Hour Intersection Volume AM (PM)*

##.# = *Average Daily Trips (1000's)*

15858 vol.dwg - eap +

TABLE 5-1: INTERSECTION ANALYSIS FOR EAP (2030) CONDITIONS

#	Intersection	Traffic Control[2]	Existing (2024) Delay[1] (secs.) AM	Existing (2024) Delay[1] (secs.) PM	Existing (2024) Level of Service AM	Existing (2024) Level of Service PM	EAP (2030) Project Only Delay[1] (secs.) AM	EAP (2030) Project Only Delay[1] (secs.) PM	EAP (2030) Project Only Level of Service AM	EAP (2030) Project Only Level of Service PM	EAP (2030) Project plus Highland Grove IV plus Greentree Delay[1] (secs.) AM	EAP (2030) Project plus Highland Grove IV plus Greentree Delay[1] (secs.) PM	EAP (2030) Project plus Highland Grove IV plus Greentree Level of Service AM	EAP (2030) Project plus Highland Grove IV plus Greentree Level of Service PM
1	La Sierra Av. & SR-91 WB Ramps	TS	17.9	20.0	B	C	18.7	21.8	B	C	18.9	22.5	B	C
2	La Sierra Av. & SR-91 EB Ramps	TS	22.0	27.8	C	C	23.9	30.7	C	C	24.0	31.2	C	D
3	La Sierra Av. & Indiana Av.	TS	31.8	34.9	C	C	39.6	43.5	D	D	41.7	48.9	D	D
4	La Sierra Av. & Victoria Av.	TS	23.0	36.0	C	D	29.2	40.8	C	D	32.9	48.7	C	D
5	La Sierra Av. & McAllister St.	TS	11.6	10.2	B	B	12.9	11.9	B	B	13.6	12.4	B	B
6	La Sierra Av. & El Sobrante Rd.	AWS	16.3	**75.3**	C	**F**	28.8	**>100.0**	D	**F**	**71.3**	**>100.0**	**F**	**F**
7	McAllister St. & El Sobrante Rd.	AWS	10.7	**39.4**	B	**E**	12.5	**94.7**	B	**F**	16.0	**>100.0**	C	**F**
8	Street A & El Sobrante Rd.	CSS	Future Intersection				14.3	11.9	B	B	23.9	16.6	C	C

* **BOLD** = Level of Service (LOS) does not meet the applicable jurisdictional requirements (i.e., unacceptable LOS).

[1] Per the Highway Capacity Manual (7th Edition), overall average intersection Delay and level of service are shown for intersections with a traffic signal or all way stop control. For intersections with cross street stop control, the delay and level of service for the worst individual movement (or movements sharing a single lane) are shown. HCM delay reported in seconds.

[2] TS = Traffic Signal; CSS = Cross-street Stop; AWS = All-way Stop; TS = Improvement

There are no additional study area intersections anticipated to operate at an unacceptable LOS during the peak hours, with the addition of the Highland Grove IV and Greentree development traffic, under EAP (2030) (Project plus Highland Grove IV plus Greentree) traffic conditions. However, La Sierra Avenue & El Sobrante Road (#6) is anticipated to operate at an unacceptable LOS (LOS F) during the AM peak hour in addition to the previously identified deficiency during the PM peak hour. The intersection operations analysis worksheets for EAP traffic conditions are included in Appendices 5.1 and 5.2 of this TA.

5.4 TRAFFIC SIGNAL WARRANTS ANALYSIS

The traffic signal warrant analysis for EAP (2030) traffic conditions are based on the planning level ADT volume-based traffic signal warrants. No additional unsignalized study area intersections are anticipated to meet either peak hour volume or ADT volume-based warrants under EAP (2030) (Project only) conditions (see Appendix 5.3).

With the addition of Highland Grove IV and Greentree development traffic, the following unsignalized study area intersection is anticipated to meet an ADT volume-based traffic signal warrant under EAP (2030) (Project plus Highland Grove IV plus Greentree) conditions (see Appendix 5.4):

- Street A & El Sobrante Road (#6)

5.5 QUEUING ANALYSIS

Queuing analysis findings are presented in Table 5-2. As shown in Table 5-2, the following additional movements are anticipated to experience queuing issues during the weekday AM or weekday PM peak 95th percentile traffic flows under EAP (2030) (Project only) conditions, in addition to the movements identified under Existing (2024) Conditions:

- La Sierra Avenue & Indiana Avenue (#3), northbound left turn lane – PM peak hour
- La Sierra Avenue & Indiana Avenue (#3), northbound through lane – AM peak hour only
- La Sierra Avenue & Indiana Avenue (#3), westbound right turn lane – AM and PM peak hours
- La Sierra Avenue & Victoria Avenue (#4), southbound left turn lane – AM peak hour

There are no additional movements anticipated to experience queuing issues during the weekday AM or weekday PM peak 95th percentile traffic flows with the addition of Highland Grove IV and Greentree traffic under EAP (2030) (Project plus Highland Grove IV plus Greentree) traffic conditions.

It should be noted that the Simtraffic maximum queues have been reported at the request of the County. However, improvements have been identified to address the 95th percentile queues. Worksheets for EAP (2030) traffic conditions off-ramp queuing analysis are provided in Appendices 5.5 and 5.6.

TABLE 5-2: PEAK HOUR QUEUING SUMMARY FOR EAP (2030) CONDITIONS

			Existing (2024)						EAP (2030) (Project Only)						EAP (2030) (Project plus Highland Grove IV plus Greentree)					
			Synchro: 95th Percentile Queue (Feet)		Acceptable? [1]		Simtraffic: Maximum Queue (Feet)		Synchro: 95th Percentile Queue (Feet)		Acceptable? [1]		Simtraffic: Maximum Queue (Feet)		Synchro: 95th Percentile Queue (Feet)		Acceptable? [1]		Simtraffic: Maximum Queue (Feet)	
Intersection	Movement	Available Stacking Distance (Feet)	AM Peak Hour	PM Peak Hour	AM	PM	AM Peak Hour	PM Peak Hour	AM Peak Hour	PM Peak Hour	AM	PM	AM Peak Hour	PM Peak Hour	AM Peak Hour	PM Peak Hour	AM	PM	AM Peak Hour	PM Peak Hour
La Sierra Av. & SR-91 WB Ramps (#1)	NBL	150	**271**	**176**	**No**	**No**	357	281	**305**	**198** [2]	**No**	**No**	351	256	**317**	**193** [2]	**No**	**No**	359	232
	NBT	450	313	251	Yes	Yes	285	238	379	282	Yes	Yes	286	247	387	285	Yes	Yes	291	244
	SBT	300	245	**342**	Yes	**No**	458	664	284	**404**	Yes	**No**	537	931	287	**414**	Yes	**No**	485	927
	SBR	150	49	96	Yes	Yes	123	187	61	123	Yes	Yes	166	190	61	125	Yes	Yes	188	190
	WBL	500	226	300	Yes	Yes	238	298	249	349	Yes	Yes	258	338	258	357	Yes	Yes	286	315
	WBT	1,200	187	235	Yes	Yes	307	363	213	289	Yes	Yes	323	385	213	319	Yes	Yes	330	386
	WBR	500	180	197	Yes	Yes	268	304	202	266	Yes	Yes	297	345	202	274	Yes	Yes	288	355
La Sierra Av. & SR-91 EB Ramps (#2)	NBT	900	359	284	Yes	Yes	475	367	431	338 [2]	Yes	Yes	696	443	451	367 [2]	Yes	Yes	672	434
	NBR	415	61	62	Yes	Yes	269	144	65	66	Yes	Yes	402	162	66	67	Yes	Yes	415	228
	SBL	150	120	**188** [2]	Yes	**No**	212	218	139	**228** [2]	Yes	**No**	196	226	141 [2]	**216** [2]	Yes	**No**	209	221
	SBT	450	29	281	Yes	Yes	212	322	39	360	Yes	Yes	182	395	42	401	Yes	Yes	245	350
	EBL	1,690	252	128	Yes	Yes	289	127	287	144	Yes	Yes	441	307	291	144	Yes	Yes	532	315
	EBT	1,690	218	346	Yes	Yes	468	373	257	425 [2]	Yes	Yes	542	504	257	482 [2]	Yes	Yes	664	723
	EBR	450	153	290	Yes	Yes	400	314	208	354	Yes	Yes	488	441	213	373	Yes	Yes	511	422
La Sierra Av. & Indiana Av. (#3)	NBL	200	**234** [2]	174 [2]	**No**	Yes	274	174	**281** [2]	**204** [2]	**No**	**No**	275	245	**294** [2]	217 [2]	**No**	**No**	275	245
	NBT	590	508 [2]	254	Yes	Yes	594	262	**638** [2]	298	**No**	Yes	650	297	**690** [2]	315	**No**	Yes	744	252
	NBR	315	49	44	Yes	Yes	142	88	61	47	Yes	Yes	357	113	68	46	Yes	Yes	354	319
	SBL	355	111 [2]	207 [2]	Yes	Yes	129	249	129 [2]	244 [2]	Yes	Yes	119	445	129 [2]	228 [2]	Yes	Yes	265	445
	SBT	900	312	542 [2]	Yes	Yes	242	389	363	679 [2]	Yes	Yes	269	843	393	709 [2]	Yes	Yes	255	866
	SBR	540	91	72	Yes	Yes	280	221	175	78	Yes	Yes	275	660	175	75	Yes	Yes	315	660
	EBL	205	**294** [2]	**263** [2]	**No**	**No**	260	260	**347** [2]	**310** [2]	**No**	**No**	265	265	**347** [2]	**334** [2]	**No**	**No**	265	265
	EBT	1,010	84	151	Yes	Yes	256	316	93	170	Yes	Yes	840	696	93	172	Yes	Yes	689	1,352
	EBR	205	41	**236**	Yes	**No**	91	243	44	**306**	Yes	**No**	96	268	44	**342**	Yes	**No**	122	384
	WBL	200	70	101	Yes	Yes	122	122	77	114	Yes	Yes	104	146	79	133 [2]	Yes	Yes	89	142
	WBT	535	101	91	Yes	Yes	150	129	112	101	Yes	Yes	199	188	112	101	Yes	Yes	221	237
	WBR	130	122	116	Yes	Yes	181	151	**156**	**154**	**No**	**No**	182	183	**156**	**157**	**No**	**No**	188	189
La Sierra Av. & Victoria Av. (#4)	NBL	210	73	55	Yes	Yes	162	158	81	60 [2]	Yes	Yes	274	153	81	60 [2]	Yes	Yes	274	274
	NBT	1,300	578	397	Yes	Yes	388	332	794 [2]	516 [2]	Yes	Yes	542	368	905 [2]	611 [2]	Yes	Yes	582	473
	SBL	210	187 [2]	**301** [2]	Yes	**No**	188	274	**218** [2]	**339** [2]	**No**	**No**	184	275	**218** [2]	**308** [2]	**No**	**No**	156	275
	SBT	1,310	202	841 [2]	Yes	Yes	205	553	237	1,034 [2]	Yes	Yes	260	1,134	253	1,131 [2]	Yes	Yes	233	1,434
	EBL	130	41	48	Yes	Yes	81	112	45	52	Yes	Yes	83	98	45	52	Yes	Yes	87	100
	EBT	325	98	121	Yes	Yes	130	151	107	134	Yes	Yes	163	172	107	134	Yes	Yes	138	168
	EBR	325	7	30	Yes	Yes	60	135	13	46	Yes	Yes	66	174	13	46	Yes	Yes	58	199
	WBL	200	129 [2]	**412** [2]	Yes	**No**	122	290	152 [2]	**497** [2]	Yes	**No**	150	305	162 [2]	**536** [2]	Yes	**No**	165	305
	WBT	530	111	81	Yes	Yes	128	314	124	89	Yes	Yes	149	1,103	124	91	Yes	Yes	142	1,477
	WBR	200	89	50	Yes	Yes	151	210	127	53	Yes	Yes	177	290	131	54	Yes	Yes	188	330
La Sierra Av. & McAllister St. (#5)	NBT	1,475	436	306	Yes	Yes	272	213	560	381	Yes	Yes	290	212	648	428	Yes	Yes	338	265
	NBR	200	16	14	Yes	Yes	35	31	19	16	Yes	Yes	48	28	19	17	Yes	Yes	97	36
	SBL	150	114	**280**	Yes	**No**	125	275	125	**320**	Yes	**No**	150	280	125	**320**	Yes	**No**	138	290
	SBT	1,065	107	431	Yes	Yes	136	269	126	568	Yes	Yes	133	264	136	670	Yes	Yes	169	297
	WBL	150	32	19	Yes	Yes	46	24	35	21	Yes	Yes	42	42	35	21	Yes	Yes	80	40
	WBR	400	62	53	Yes	Yes	135	82	102	57	Yes	Yes	193	107	106	57	Yes	Yes	207	133

[1] Stacking Distance is acceptable if the required stacking distance is less than or equal to the stacking distance provided for the 95th percentile queue only. An additional 15 feet of stacking which is assumed to be provided in the transition for turn pockets is reflected in the stacking distance shown on this table, where applicable.
[2] 95th percentile volume exceeds capacity, queue may be longer. Queue shown is maximum after two cycles.
[3] Although 95th percentile queue is anticipated to exceed the available storage for the turn lane, the adjacent through lane has sufficient storage to accommodate any spillover without spilling back and affecting the SR-91 Freeway mainline.

5.6 DEFICIENCIES AND RECOMMENDED IMPROVEMENTS

This section provides a summary of deficiencies and recommended improvements based on the County of Riverside deficiency criteria discussed in Section 2.6 *Deficiency Criteria*.

5.6.1 INTERSECTIONS

Intersection improvements necessary to improve project-related traffic deficiencies are shown in Table 5-3. The improvements have been identified to improve the deficiencies back to acceptable levels. Worksheets for EAP (2030) conditions, with improvements, HCM calculation worksheets are provided in Appendices 5.7 and 5.8.

5.6.1 QUEUES

Improvements to address queuing deficiencies have been identified where feasible and are shown in Table 5-4. Improvements have not been identified at the following movements, as improvements are not considered feasible due to physical constraints on the existing roadways:

- La Sierra Avenue & SR-91 WB Ramps (#1), northbound left turn lane
- La Sierra Avenue & SR-91 WB Ramps (#1), southbound through lane
- La Sierra Avenue & SR-91 RB Ramps (#2), southbound left turn lane
- La Sierra Avenue & Indiana Avenue (#3), northbound through lane
- La Sierra Avenue & Indiana Avenue (#3), eastbound left turn lane
- La Sierra Avenue & Indiana Avenue (#3), eastbound right turn lane

TABLE 5-3: INTERSECTION ANALYSIS FOR EAP (2030) CONDITIONS WITH IMPROVEMENTS

#	Intersection	Traffic Control[3]	Intersection Approach Lanes[1] Northbound L	T	R	Southbound L	T	R	Eastbound L	T	R	Westbound L	T	R	Delay[2] (secs.) AM	PM	Level of Service AM	PM
6	La Sierra Av. & El Sobrante Rd.																	
	Project Only Without Improvements:	AWS	0	2	0	1	1	0	0	0	0	0	1	0	28.8	**>100.0**	D	**F**
	Project plus Highland Grove IV plus Greentree Without Improvements:	AWS	0	2	0	1	1	0	0	0	0	0	1	0	**71.3**	**>100.0**	**F**	**F**
	Project Only With Improvements:	**TS**	0	2	0	1	1	0	0	0	0	0	1	0	20.5	34.2	C	C
	Project plus Highland Grove IV plus Greentree With Improvements:	**TS**	0	2	0	1	1	0	0	0	0	0	1	0	35.1	54.7	D	D
7	McAllister St. & El Sobrante Rd.																	
	Project Only Without Improvements:	AWS	0	0	0	0	1	0	1	1	0	0	2	0	12.5	**94.7**	B	**F**
	Project plus Highland Grove IV plus Greentree Without Improvements:	AWS	0	0	0	0	1	0	1	1	0	0	2	0	16.0	**>100.0**	C	**F**
	Project Only With Improvements:	**TS**	0	0	0	0	1	0	1	1	0	0	2	0	9.0	9.2	A	A
	Project plus Highland Grove IV plus Greentree With Improvements:	**TS**	0	0	0	0	1	0	1	1	0	0	2	0	9.1	10.6	B	B

BOLD = LOS does not meet the applicable jurisdictional requirements (i.e., unacceptable LOS).

[1] When a right turn is designated, the lane can either be striped or unstriped. To function as a right turn lane there must be sufficient width for right turning vehicles to travel outside the through lanes.

L = Left; T = Through; R = Right; **1** = Improvement

[2] Per the Highway Capacity Manual 6th Edition, overall average intersection delay and level of service are shown for intersections with a traffic signal or all-way stop control. For intersections with cross street stop control, the delay and level of service for the worst individual movement (or movements sharing a single lane) are shown.

[3] TS = Traffic Signal; AWS = All-way Stop; **TS** = Improvement

TABLE 5-4: PEAK HOUR QUEUING SUMMARY FOR EAP (2030) CONDITIONS WITH IMPROVEMENTS

Intersection	Movement	Available Stacking Distance (Feet)	Project Only Synchro: 95th Percentile Queue (Feet) AM Peak Hour	PM Peak Hour	Acceptable? [1] AM	PM	Project plus Highland Grove IV plus Greentree Synchro: 95th Percentile Queue (Feet) AM Peak Hour	PM Peak Hour	Acceptable? [1] AM	PM
La Sierra Av. & Indiana Av. (#3)	NBL	**325**	281 [2]	204 [2]	Yes	Yes	294 [2]	217 [2]	Yes	Yes
La Sierra Av. & Victoria Av. (#4)	SBL	**325**	218 [2]	**339** [2]	Yes	**No**	218 [2]	**349** [2]	Yes	**No**
	WBL	**500**	152 [2]	497 [2]	Yes	Yes	162 [2]	**536** [2]	Yes	**No**
La Sierra Av. & McAllister St. (#5)	SBL	**475**	155	320	Yes	Yes	155	320	Yes	Yes

[1] Stacking Distance is acceptable if the required stacking distance is less than or equal to the stacking distance provided for the 95th percentile queue only. An additional 15 feet of stacking which is assumed to be provided in the transition for turn pockets is reflected in the stacking distance shown on this table, where applicable.

[2] 95th percentile volume exceeds capacity, queue may be longer. Queue shown is maximum after two cycles.

[3] **100** = Improvement

6 EAPC (2030) TRAFFIC CONDITIONS

This section discusses the traffic forecasts for EAPC (2030) conditions and the resulting intersection operations, traffic signal warrant, and queuing analyses.

6.1 ROADWAY IMPROVEMENTS

The lane configurations and traffic controls assumed to be in place for EAPC (2030) conditions are consistent with those shown previously on Exhibit 3-1, with the exception of the following:

- Project driveways and those facilities assumed to be constructed by the Project to provide site access are also assumed to be in place for EAPC (2030) conditions only (e.g., intersection and roadway improvements at the Project's frontage and driveways).
- Driveways and those facilities assumed to be constructed by cumulative developments to provide site access are also assumed to be in place for EAPC (2030) conditions only (e.g., intersection and roadway improvements along the cumulative development's frontages).

6.2 EAPC (2030) TRAFFIC VOLUME FORECASTS

This scenario includes Existing (2024) traffic volumes plus an ambient growth factor of 12.62%, the addition of Project traffic, plus the addition of traffic generated by known cumulative development projects. The weekday ADT volumes and peak hour volumes which can be expected for EAPC (2030) traffic conditions are shown on Exhibit 6-1.

6.3 INTERSECTION OPERATIONS ANALYSIS

EAPC (2030) peak hour traffic operations have been evaluated for the study area intersections based on the analysis methodologies presented in Section 2 *Methodologies* of this TA. The intersection analysis results are summarized in Table 5-1 for EAPC traffic conditions, which indicate that all of the study area intersections are anticipated to continue to operate at an acceptable LOS under EAPC (2030) traffic conditions, with the exception of the following intersections:

- La Sierra Avenue & El Sobrante Road (#6) – LOS F AM and PM peak hours
- McAllister Street & El Sobrante Road (#7) – LOS F PM peak hour only

The intersection operations analysis worksheets for EAPC traffic conditions are included in Appendix 6.1 of this TA.

EXHIBIT 6-1 : EAPC (2030) TRAFFIC VOLUMES

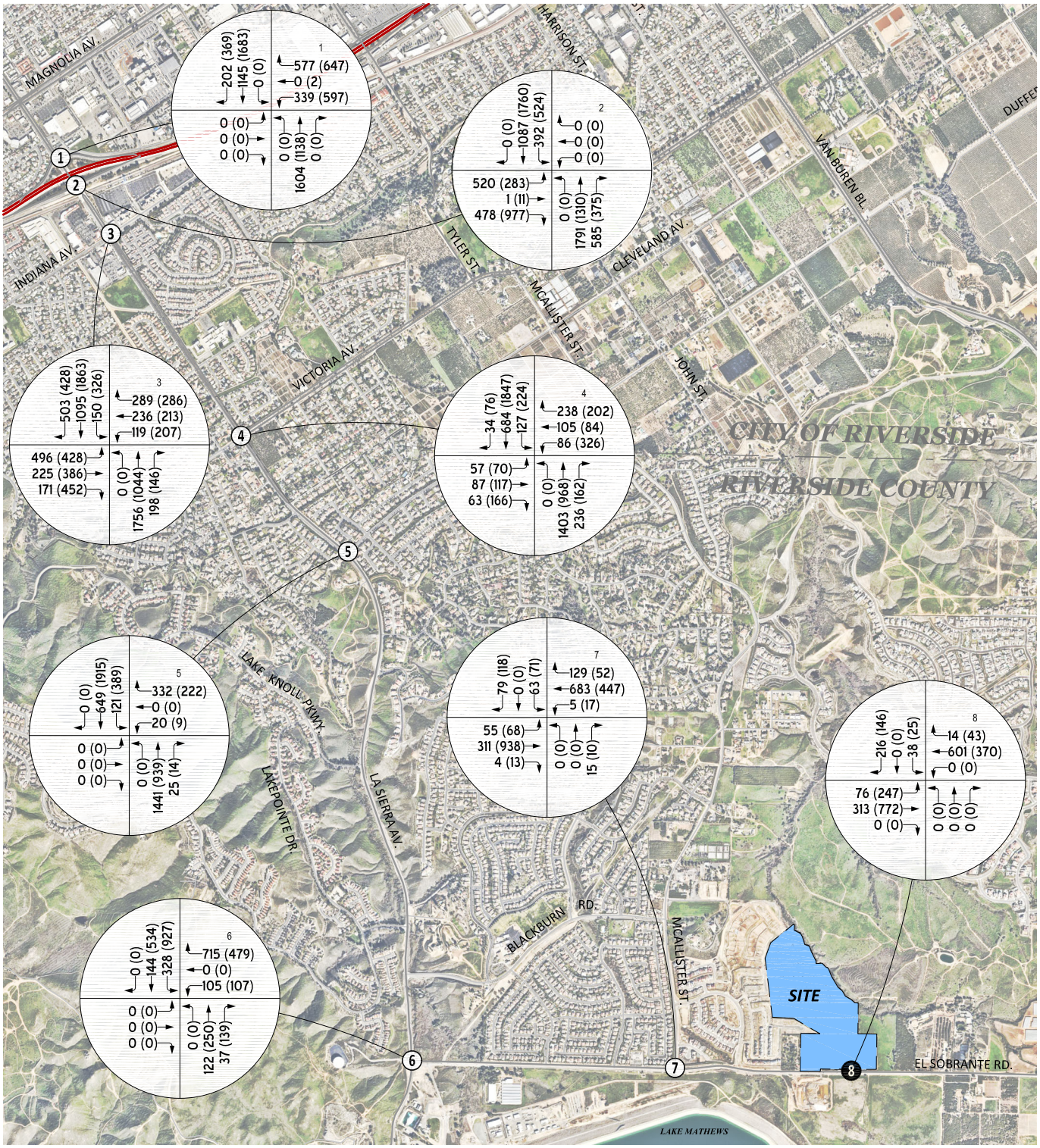

LEGEND

(0) = *Existing Intersection Analysis Location*	**00 (00)** = *Peak Hour Intersection Volume AM (PM)*
0 = *Future Intersection Analysis Location*	*##.#* = *Average Daily Trips (1000's)*

15858 vol.dwg - eapc

TABLE 6-1: INTERSECTION ANALYSIS FOR EAPC (2030) CONDITIONS

#	Intersection	Traffic Control[2]	EAPC (2030) Delay[1] (secs.) AM	PM	Level of Service AM	PM
1	La Sierra Av. & SR-91 WB Ramps	TS	19.5	23.6	B	C
2	La Sierra Av. & SR-91 EB Ramps	TS	24.2	31.8	C	D
3	La Sierra Av. & Indiana Av.	TS	48.3	53.5	D	D
4	La Sierra Av. & Victoria Av.	TS	37.9	52.5	D	D
5	La Sierra Av. & McAllister St.	TS	20.3	15.9	C	B
6	La Sierra Av. & El Sobrante Rd.	AWS	**97.8**	**>100.0**	**F**	**F**
7	McAllister St. & El Sobrante Rd.	AWS	16.4	**>100.0**	C	**F**
8	Street A & El Sobrante Rd.	CSS	26.5	18.4	D	C

* **BOLD** = Level of Service (LOS) does not meet the applicable jurisdictional requirements (i.e., unacceptable LOS).

[1] Per the Highway Capacity Manual (7th Edition), overall average intersection Delay and level of service are shown for intersections with a traffic signal or all way stop control. For intersections with cross street stop control, the delay and level of service for the worst individual movement (or movements sharing a single lane) are shown. HCM delay reported in seconds.

[2] TS = Traffic Signal; CSS = Cross-street Stop; AWS = All-way Stop; TS = Improvement

6.4 TRAFFIC SIGNAL WARRANTS ANALYSIS

All unsignalized study area intersections are anticipated to meet a traffic signal warrant under previous analysis scenarios. As such, traffic signal warrants have not been evaluated EAPC (2030) traffic conditions.

6.5 QUEUING ANALYSIS

Queuing analysis findings are presented in Table 6-2. As shown in Table 6-2, the following movements are anticipated to experience queuing issues during the weekday AM or weekday PM peak 95th percentile traffic flows:

- La Sierra Avenue & SR-91 WB Ramps (#1), northbound left turn lane – AM and PM peak hours
- La Sierra Avenue & SR-91 WB Ramps (#1), southbound through lane – AM and PM peak hours
- La Sierra Avenue & SR-91 WB Ramps (#1), southbound right turn lane – PM peak hour only
- La Sierra Avenue & SR-91 EB Ramps (#2), southbound left turn lane – AM and PM peak hours
- La Sierra Avenue & Indiana Avenue (#3), northbound left turn lane – AM and PM peak hours
- La Sierra Avenue & Indiana Avenue (#3), northbound through lane – AM peak hour only
- La Sierra Avenue & Indiana Avenue (#3), eastbound left turn lane – AM and PM peak hours
- La Sierra Avenue & Indiana Avenue (#3), eastbound right turn lane – PM peak hour only
- La Sierra Avenue & Indiana Avenue (#3), westbound right turn lane – AM and PM peak hours
- La Sierra Avenue & Victoria Avenue (#4), southbound left turn lane – AM and PM peak hours
- La Sierra Avenue & Victoria Avenue (#4), westbound left turn lane – PM peak hour only
- La Sierra Avenue & McAllister Parkway (#5), southbound left turn lane – AM and PM peak hours

It should be noted that the Simtraffic maximum queues have been reported at the request of the County. However, improvements have been identified to address the 95th percentile queues. Worksheets for EAPC (2030) traffic conditions off-ramp queuing analysis are provided in Appendix 6.2.

TABLE 6-2: PEAK HOUR QUEUING SUMMARY FOR EAPC (2030) CONDITIONS

Intersection	Movement	Available Stacking Distance (Feet)	Synchro: 95th Percentile Queue (Feet)		EAPC (2030) Acceptable? [1]		Simtraffic: Maximum Queue (Feet)	
			AM Peak Hour	PM Peak Hour	AM	PM	AM Peak Hour	PM Peak Hour
La Sierra Av. & SR-91 WB Ramps (#1)	NBL	150	**322** [2]	**177**	**No**	**No**	320	235
	NBT	450	415	295	Yes	Yes	281	236
	SBT	300	**317**	**498** [2]	**No**	**No**	782	991
	SBR	150	83	**164**	Yes	**No**	190	190
	WBL	500	271	430 [2]	Yes	Yes	253	350
	WBT	1,200	246	372 [2]	Yes	Yes	371	389
	WBR	500	232	317 [2]	Yes	Yes	323	362
La Sierra Av. & SR-91 EB Ramps (#2)	NBT	900	521 [2]	405 [2]	Yes	Yes	834	497
	NBR	415	70	70	Yes	Yes	505	240
	SBL	150	**187** [2]	**225** [2]	**No**	**No**	227	230
	SBT	450	46	432	Yes	Yes	378	456
	EBL	1,690	317	181	Yes	Yes	850	1474
	EBT	1,690	294	525 [2]	Yes	Yes	959	1484
	EBR	450	247	400	Yes	Yes	559	560
La Sierra Av. & Indiana Av. (#3)	NBL	200	**313** [2]	**231** [2]	**No**	**No**	275	260
	NBT	590	**757** [2]	345	**No**	Yes	1,435	312
	NBR	315	81	50	Yes	Yes	425	109
	SBL	355	142 [2]	232 [2]	Yes	Yes	158	445
	SBT	900	426 [2]	780 [2]	Yes	Yes	330	889
	SBR	540	192	75	Yes	Yes	352	660
	EBL	205	**354** [2]	**345** [2]	**No**	**No**	265	265
	EBT	1,010	93	174	Yes	Yes	774	1,724
	EBR	205	45	**375**	Yes	**No**	113	407
	WBL	200	85	143 [2]	Yes	Yes	102	162
	WBT	535	112	101	Yes	Yes	256	162
	WBR	130	**162**	**167**	**No**	**No**	188	179
La Sierra Av. & Victoria Av. (#4)	NBL	210	81	60 [2]	Yes	Yes	274	233
	NBT	1,300	1,028 [2]	712 [2]	Yes	Yes	778	507
	SBL	210	**236** [2]	**261**	**No**	**No**	202	275
	SBT	1,310	278	1,164 [2]	Yes	Yes	244	1,433
	EBL	130	48	54	Yes	Yes	119	102
	EBT	325	107	134	Yes	Yes	135	155
	EBR	325	13	46	Yes	Yes	61	163
	WBL	200	179 [2]	**577** [2]	Yes	**No**	163	305
	WBT	530	124	92	Yes	Yes	141	1,714
	WBR	200	148	56	Yes	Yes	176	330
La Sierra Av. & McAllister St. (#5)	NBT	1,475	754 [2]	452	Yes	Yes	370	263
	NBR	200	20	17	Yes	Yes	137	36
	SBL	150	**164** [2]	**460** [2]	**No**	**No**	164	358
	SBT	1,065	144	722	Yes	Yes	184	374
	WBL	150	35	21	Yes	Yes	53	37
	WBR	400	194	64	Yes	Yes	312	157

[1] Stacking Distance is acceptable if the required stacking distance is less than or equal to the stacking distance provided for the 95th percentile queue only. An additional 15 feet of stacking which is assumed to be provided in the transition for turn pockets is reflected in the stacking distance shown on this table, where applicable.

[2] 95th percentile volume exceeds capacity, queue may be longer. Queue shown is maximum after two cycles.

[3] Although 95th percentile queue is anticipated to exceed the available storage for the turn lane, the adjacent through lane has sufficient storage to accommodate any spillover without spilling back and affecting the SR-91 Freeway mainline.

6.6 DEFICIENCIES AND RECOMMENDED IMPROVEMENTS

This section provides a summary of deficiencies and recommended improvements based on the County of Riverside deficiency criteria discussed in Section 2.6 *Deficiency Criteria*.

6.6.1 INTERSECTIONS

Intersection improvements necessary to improve project-related traffic deficiencies are shown in Table 6-3. The improvements have been identified to improve the deficiencies back to acceptable levels. Worksheets for EAPC (2030) conditions, with improvements, HCM calculation worksheets are provided in Appendices 6.3.

TABLE 6-3: INTERSECTION ANALYSIS FOR EAPC (2030) CONDITIONS WITH IMPROVEMENTS

			Intersection Approach Lanes[1]												Delay[2] (secs.)		Level of Service	
		Traffic	Northbound			Southbound			Eastbound			Westbound						
#	Intersection	Control[3]	L	T	R	L	T	R	L	T	R	L	T	R	AM	PM	AM	PM
6	La Sierra Av. & El Sobrante Rd.																	
	- Without Improvements	AWS	0	2	0	1	1	0	0	0	0	0	1	0	**97.8**	**>100.0**	**F**	**F**
	- With Improvements	**TS**	0	2	0	1	1	0	0	0	0	1	0	**1>**	14.1	25.6	B	C
7	McAllister St. & El Sobrante Rd.																	
	- Without Improvements	AWS	0	0	0	0	1	0	1	1	0	0	2	0	16.4	**>100.0**	C	**F**
	- With Improvements	**TS**	0	0	0	0	1	0	1	1	0	0	2	0	9.7	11.3	A	B

BOLD = LOS does not meet the applicable jurisdictional requirements (i.e., unacceptable LOS).

[1] When a right turn is designated, the lane can either be striped or unstriped. To function as a right turn lane there must be sufficient width for right turning vehicles to travel outside the through lanes.

L = Left; T = Through; R = Right; > = Right-Turn Overlap Phasing; **1** = Improvement

[2] Per the Highway Capacity Manual (7th Edition), overall average intersection Delay and level of service are shown for intersections with a traffic signal or all way stop control. For intersections with cross street stop control, the delay and level of service for the worst individual movement (or movements sharing a single lane) are shown. HCM delay reported in seconds.

[3] TS = Traffic Signal; AWS = All-way Stop; **TS** = Improvement

6.6.1 QUEUES

Improvements to address queuing deficiencies have been identified where feasible and are shown in Table 3-4. Improvements have not been identified at the following movements, as improvements are not considered feasible due to physical constraints on the existing roadways:

- La Sierra Avenue & SR-91 WB Ramps (#1), northbound left turn lane
- La Sierra Avenue & SR-91 WB Ramps (#1), southbound through lane
- La Sierra Avenue & SR-91 WB Ramps (#1), southbound right turn lane
- La Sierra Avenue & SR-91 RB Ramps (#2), southbound left turn lane
- La Sierra Avenue & Indiana Avenue (#3), northbound through lane
- La Sierra Avenue & Indiana Avenue (#3), eastbound left turn lane
- La Sierra Avenue & Indiana Avenue (#3), eastbound right turn lane

TABLE 6-4: PEAK HOUR QUEUING SUMMARY FOR EAP (2030) CONDITIONS WITH IMPROVEMENTS

Intersection	Movement	Available Stacking Distance (Feet)	EAPC (2030) Synchro: 95th Percentile Queue (Feet)		Acceptable? [1]	
			AM Peak Hour	PM Peak Hour	AM	PM
La Sierra Av. & Indiana Av. (#3)	NBL	**325**	313 [2]	231 [2]	Yes	Yes
La Sierra Av. & Victoria Av. (#4)	SBL	**325**	236 [2]	**423** [2]	Yes	**No**
	WBL	**500**	180 [2]	**577** [2]	Yes	**No**
La Sierra Av. & McAllister St. (#5)	SBL	**475**	212 [2]	460 [2]	Yes	Yes

[1] Stacking Distance is acceptable if the required stacking distance is less than or equal to the stacking distance provided for the 95th percentile queue only. An additional 15 feet of stacking which is assumed to be provided in the transition for turn pockets is reflected in the stacking distance shown on this table, where applicable.

[2] 95th percentile volume exceeds capacity, queue may be longer. Queue shown is maximum after two cycles.

[3] **100** = Improvement

This page intentionally left blank

7 LOCAL AND REGIONAL FUNDING MECHANISMS

Transportation improvements within the County of Riverside are funded through a combination of improvements constructed by the Project, and development impact fee programs. Fee programs applicable to the Project are described below.

7.1 RIVERSIDE COUNTY TRANSPORTATION UNIFORM MITIGATION FEE (TUMF)

The TUMF program is administered by the Western Riverside Council of Governments (WRCOG) based upon a regional Nexus Study most recently updated in 2016 to address major changes in right of way acquisition and improvement cost factors. (6) This regional program was put into place to ensure that development pays its fair share, and that funding is in place for construction of facilities needed to maintain the requisite level of service and critical to mobility in the region. TUMF is a truly regional mitigation fee program and is imposed and implemented in every jurisdiction in Western Riverside County.

7.2 RIVERSIDE COUNTY DEVELOPMENT IMPACT FEE (DIF) PROGRAM

The Project is located within the County's Lake Mathews/Woodcrest Area Plan and therefore will be subject to County of Riverside DIF in an effort by the County to address development throughout its unincorporated area. The DIF program consists of two separate transportation components: the Roads, Bridges and Major Improvements component and the Traffic Signals component. Eligible facilities for funding by the County DIF program are identified on the County's Public Needs List, which currently extends through the year 2020. (7) A comprehensive review of the DIF program is now planned in order to update the nexus study. This will result in development of a revised "needs list" extending the program time horizon from 2010 to 2030.

The cost of signalizing DIF network intersections is identified under the Traffic Signals component of the DIF program. County staff generally defines DIF eligible intersections as those consisting of two intersecting general plan roadways. If the intersection meets this requirement, it is potentially eligible for up to $235,000 of credit, which is subject to negotiations with the County.

7.3 MEASURE A

Measure A, Riverside County's half-cent sales tax for transportation, was adopted by voters in 1988 and extended in 2002. It will continue to fund transportation improvements through 2038. Measure A funds a wide variety of transportation projects and services throughout the County. RCTC is responsible for administering the program. Measure A dollars are spent in accordance with a voter-approved expenditure plan that was adopted as part of the 1988 election.

7.4 FAIR SHARE CONTRIBUTION

Project improvements may include a combination of fee payments to established programs, construction of specific improvements, payment of a fair share contribution toward future improvements, or a combination of these approaches. Improvements constructed by development may be eligible for a fee credit or reimbursement through the program where appropriate. When off-site improvements are identified with a minor share of responsibility assigned to proposed development, the approving jurisdiction may elect to collect a fair share contribution or require the development to construct improvements. Detailed fair share calculations, for each peak hour, have been provided in Table 7-1 for the applicable deficient study area intersections. These fees are collected with the proceeds solely used as part of a funding mechanism aimed at ensuring that regional highways and arterial expansions keep pace with the projected population increases.

TABLE 7-1: PROJECT FAIR SHARE CALCULATIONS

#	Intersection		Existing (2024)	Project	EAPC (2030)	Total New Traffic	Project % of New Traffic[1]
6	La Sierra Av. & El Sobrante Rd.						
		AM:	995	62	1,451	456	**13.6%**
		PM:	1,769	84	2,436	667	12.6%
7	McAllister St. & El Sobrante Rd.						
		AM:	910	78	1,356	446	17.5%
		PM:	1,148	106	1,741	593	**17.9%**

[1] **BOLD =** Highest fair share percentage is highlighted.

8 REFERENCES

1. **County of Riverside Transportation Department.** *Transportation Analysis Guidelines for Level of Service Vehicle Miles Traveled.* County of Riverside : s.n., December 2020.
2. **VRPA Technologies, Inc. for Riverside County Transportation Commission.** *Riverside County Long Range Transportation Study.* County of Riverside : VRPA Technologies, Inc., December 2019.
3. **Transportation Research Board.** *Highway Capacity Manual (HCM).* 7th Edition. s.l. : National Academy of Sciences, 2022.
4. **California Department of Transportation.** California Manual on Uniform Traffic Control Devices (CA MUTCD). [book auth.] California Department of Transportation. *California Manual on Uniform Traffic Control Devices (CA MUTCD).* 2014, Updated March 30, 2021 (Revision 6).
5. **Institute of Transportation Engineers.** *Trip Generation Manual.* 11th Edition. 2021.
6. **Western Riverside Council of Governments.** *TUMF Nexus Study, 2016 Program Update.* July 2017.
7. **Willdan Financial Services.** *County of Riverside Development Impact Fee Study Update.* County of Riverside : s.n., 2013.

This page intentionally left blank

APPENDIX 1.1: APPROVED TRAFFIC STUDY SCOPING AGREEMENT

This Page Intentionally Left Blank

MEMORANDUM

URBAN | CROSSROADS

DATE: April 19, 2024
TO: Kevin Tsang, County of Riverside
FROM: Charlene So, Urban Crossroads, Inc.
JOB NO: 15858-02 TA Scope

HIGHLAND GROVE TTM NO. 38910 FOCUSED TRAFFIC STUDY SCOPING AGREEMENT

Urban Crossroads, Inc. is pleased to provide the following Focused Traffic Study Scoping Agreement for the Highland Grove TTM No. 38910 development (**Project**), which is located immediately north of El Sobrante Road, east of McCallister Parkway, and south of Travertine Drive in the County of Riverside. This letter describes the proposed Project trip generation, trip distribution, and analysis methodology, which have been used to establish the draft proposed Project study area and analysis locations. The proposed analysis methodology and assumptions are in accordance with the County's Transportation Analysis Guidelines for Level of Service Vehicle Miles Traveled (dated December 2020) (**County Guidelines**). The County scoping form is included in Attachment A.

PROJECT DESCRIPTION

The Project is anticipated to have an Opening Year of 2030. The Project includes the development of 128 single family detached residential dwelling units. A preliminary site plan for the proposed Project is shown on Exhibit 1. Primary access to the Project site will be accommodated via a new connection to El Sobrante Road (via Street A). Street A on El Sobrante Road is assumed to allow for full access (no left turn restrictions).

EXHIBIT 1: PRELIMINARY SITE PLAN

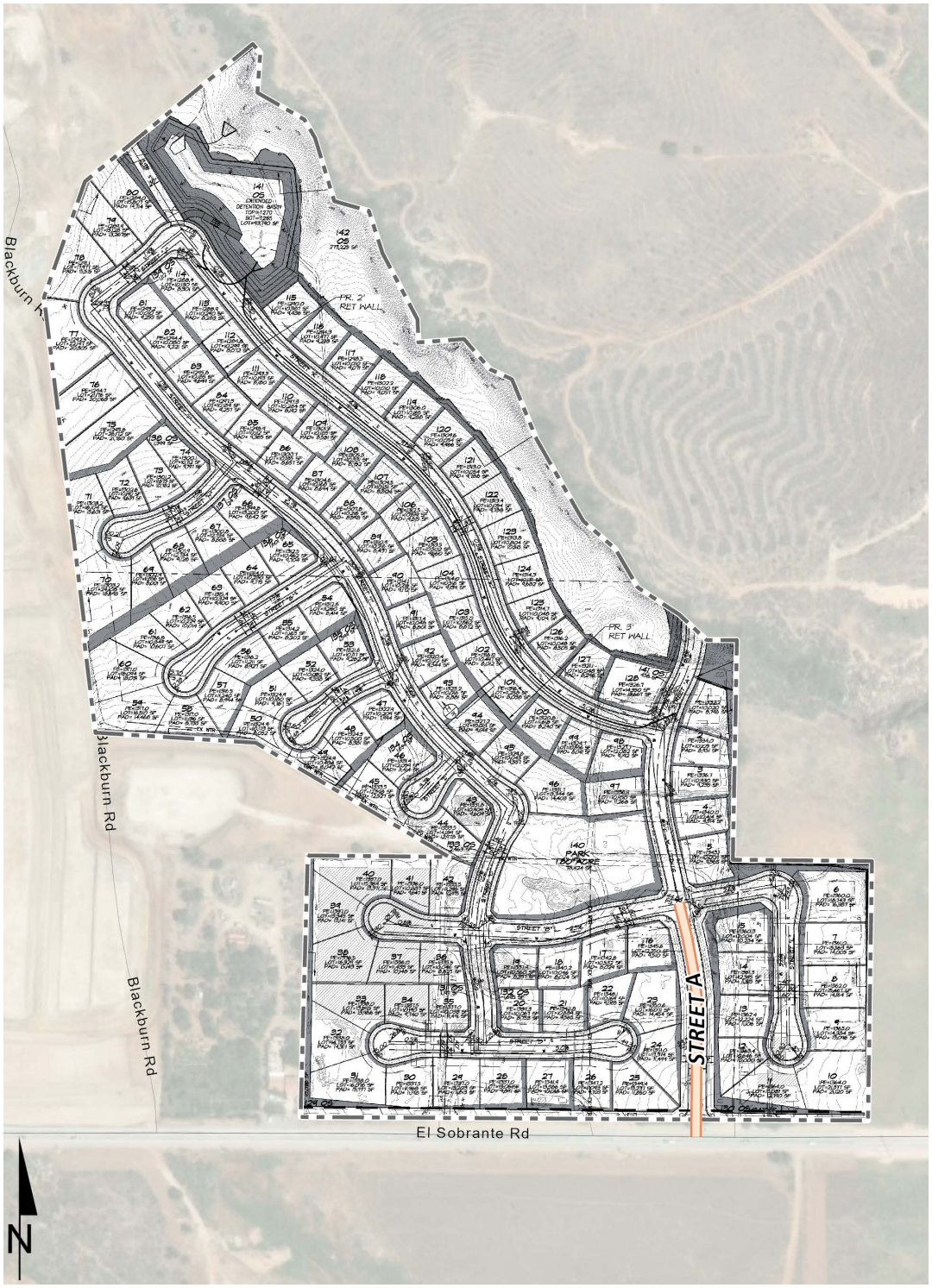

TRIP GENERATION

Trip generation represents the amount of traffic that is attracted and produced by a development and is based upon the specific land uses planned for a given project. In order to develop the traffic characteristics of the proposed project, trip-generation statistics published in the Institute of Transportation Engineers (ITE) Trip Generation Manual (11th Edition, 2021) were used to estimate the Project's trip generation based on the Single Family Detached Housing (ITE Land Use Code 210) land use category. Trip generation rates are summarized on Table 1.

The trip generation summary illustrating daily, and peak hour trip generation estimates for the proposed Project are also shown on Table 1. The proposed Project is anticipated to generate 1,208 two-way trip-ends per day with 89 AM peak hour trips and 121 PM peak hour trips (see Table 1).

TABLE 1: PROJECT TRIP GENERATION SUMMARY

Land Use[1]	Units[2]	ITE LU Code	AM Peak Hour In	AM Peak Hour Out	AM Peak Hour Total	PM Peak Hour In	PM Peak Hour Out	PM Peak Hour Total	Daily
Single Family Detached Residential	DU	210	0.18	0.52	0.70	0.59	0.35	0.94	9.43

[1] Trip Generation Source: Institute of Transportation Engineers (ITE), Trip Generation Manual, Eleventh Edition (2021).

[2] DU = Dwelling Units

Land Use	Quantity	Units[1]	AM Peak Hour In	AM Peak Hour Out	AM Peak Hour Total	PM Peak Hour In	PM Peak Hour Out	PM Peak Hour Total	Daily
Highland Grove II (TTM No. 38910)	128	DU	23	66	89	76	45	121	1,208

[1] DU = Dwelling Units

TRIP DISTRIBUTION

The Project trip distribution represents the directional orientation of traffic to and from the Project site. Trip distribution is the process of identifying the probable destinations, directions or traffic routes that will be utilized by Project traffic. The potential interaction between the planned land uses and surrounding regional access routes are considered, to identify the route where the Project traffic would distribute. Exhibit 2 shows the Project trip distribution patterns. Project trip distribution patterns are based on traffic counts from 2023 for the applicable study area intersections (see Attachment B).

EXHIBIT 2: PROJECT TRIP DISTRIBUTION

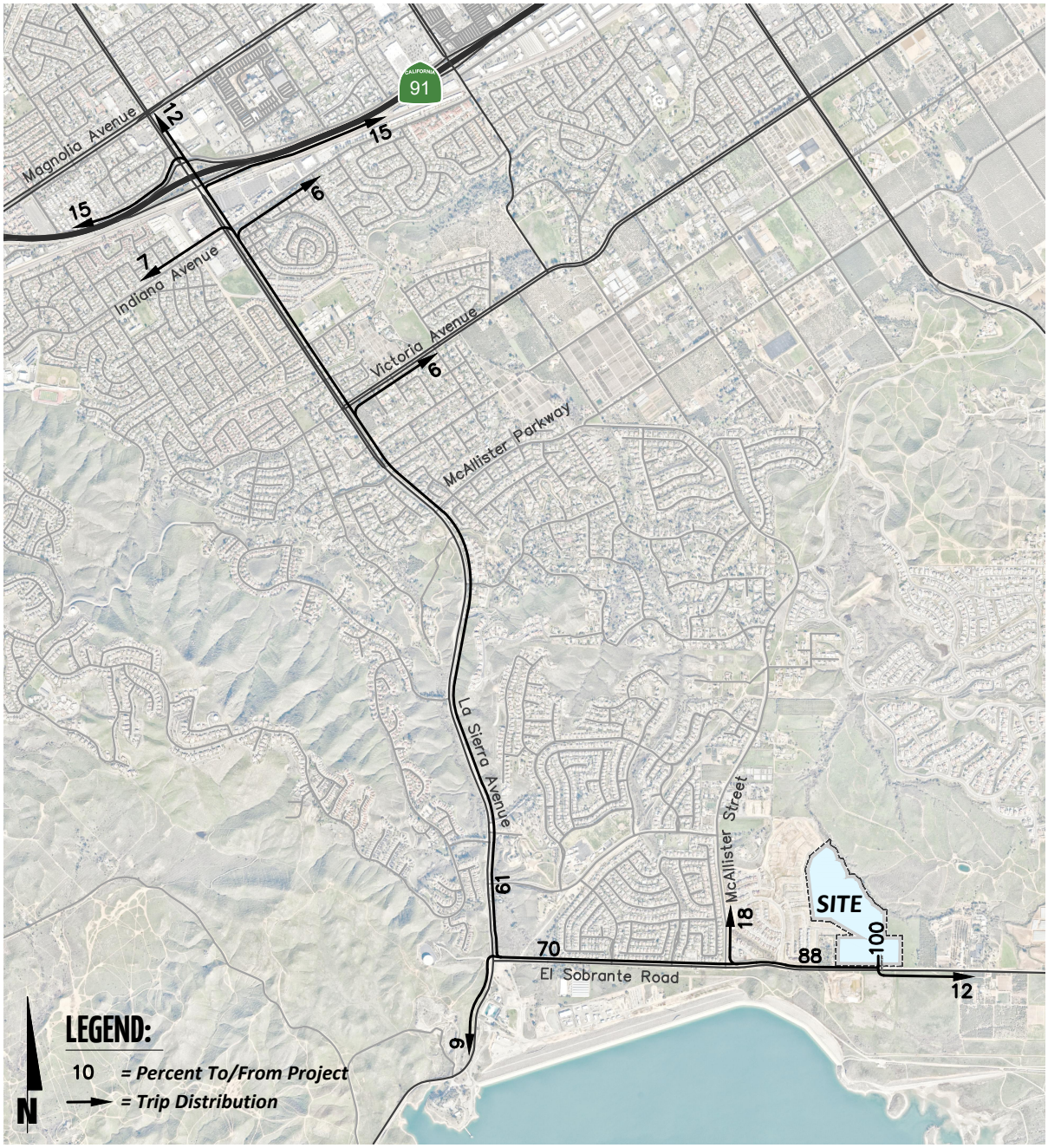

ANALYSIS SCENARIOS

Consistent with the County's Guidelines, intersection analysis will be provided for the following analysis scenarios:

- Existing (2024) Conditions
- Existing plus Ambient Growth plus Project (EAP) (2030) Conditions – Project only
- EAP (2030) Conditions – Project plus Highland Grove IV plus Greentree
- Existing plus Ambient Growth plus Project plus Cumulative (EAPC) (2030) Conditions

All study area intersections will be evaluated using the Highway Capacity Manual (HCM) 7th Edition analysis methodology. The study area that is proposed to be evaluated is shown on Exhibit 3.

EXHIBIT 3: STUDY AREA

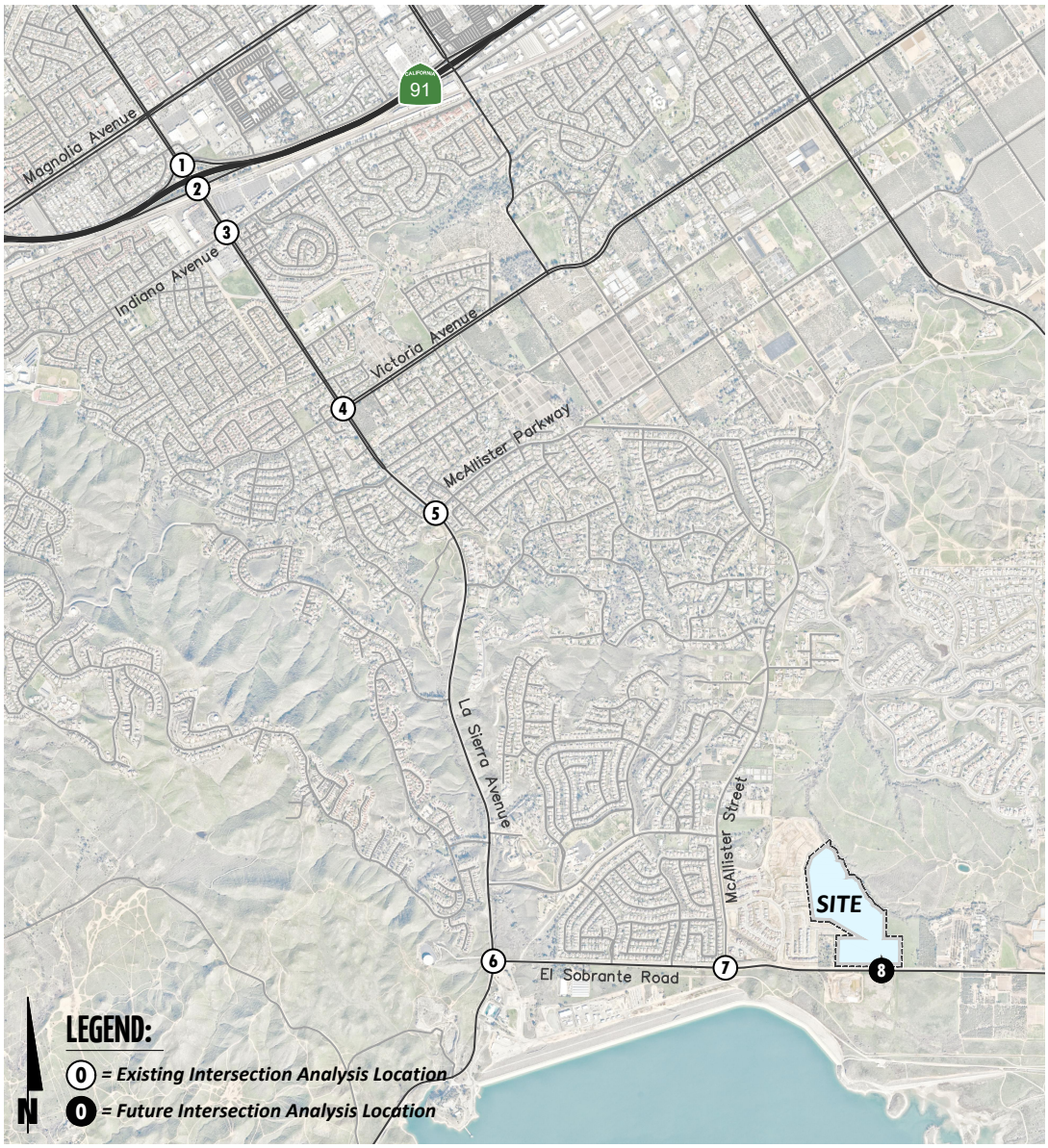

TRAFFIC COUNTS

New traffic counts (classified by vehicle type) will be conducted during a typical weekday when local schools are in session and operating on a typical bell schedule. No adjustments are proposed to the traffic counts for the baseline traffic condition with the exception of volume balancing between closely spaced intersections. Traffic counts will be conducted once the scoping agreement has been approved.

AMBIENT GROWTH

An ambient growth rate of 2% per year is proposed for the study area intersection to approximate background growth not identified by nearby cumulative development projects. As such, a total of 12.6% will be applied to the baseline (2% per year, compounded over 6 years).

CUMULATIVE PROJECTS

It is requested that the County of Riverside provide current cumulative projects within the study area for inclusion in the Traffic Analysis. The City of Riverside will also be contacted to obtain a current list of cumulative projects for their agency. A preliminary list of cumulative projects is provided on Table 2 and locations are graphically depicted on Exhibit 4.

TABLE 2: CUMULATIVE DEVELOPMENT LAND USE SUMMARY

No.	Project Name	Land Use[1]	Quantity	Units[2]
County of Riverside				
RC1	PM37227	Single Family Residential	9	DU
RC2	Highland Grove Vistas 4 (TTM No. 38927)	Single Family Residential	206	DU
RC3	TTM38520	Single Family Residential	45	DU
RC4	Greentree (TTM No. 38605)	Single Family Residential	163	DU
City of Riverside				
R1	P13-0165, P13-0166, P13-0167, P13-0168	Gas Sation w/ Car Wash	16.0	AC
R2	P18-0600	Retail/Restaurant w/ Drive Thru	4.494	TSF
R3	PR-2021-001151	Apartment Units & Dental Office	8.139	TSF
R4	P19-0410, P19-0411, P19-0412	Single Family Residential	34	DU
R5	PR-2023-001476	Coffee Shop w/ Drive-Thru (Starbucks)	2.300	TSF
R6	P18-0396, P18-0370	Multi-Family Residential	57	DU
R7	PR-2021-000713	Hospital Tower Expansion	318.433	TSF
R8	PR-2022-001468	Multi-Family Residential	38	DU
R9	P19-0863	Multi-Family Residential	450	DU
		Commercial Retail	9.000	TSF
R10	P14-0176	Single Family Residential	14	DU

[1] TSF = Thousand Square Feet; DU = Dwelling Units; AC = Acres

EXHIBIT 4: CUMULATIVE DEVELOPMENT LOCATION MAP



SPECIAL ISSUES

The following special issues will also be addressed:

- VMT analysis will be evaluated in a separate document.
- Conduct traffic signal warrant analysis for all existing and future unsignalized study area intersections, which also includes Street A at El Sobrante Road. If a traffic signal is warranted under existing traffic conditions, 24-hour approach counts will be collected to conduct 8-hour and 4-hour warrants.
- Provide a queuing analysis for the Project driveway (Street A at El Sobrante). This will be used to determine the appropriate turn pocket lengths needed to accommodate peak hour queues.
- Queuing analysis will also be conducted at all signalized study area intersections along La Sierra Avenue. Report through movement queues in addition to the turn-lane queues. Include a summary table for the queues for each applicable analysis scenario. Tables should report the available storage, 95th percentile queue from Synchro and Max Queues from SimTraffic.

If you have any questions or comments, I can be reached at cso@urbanxroads.com.

ATTACHMENT A: COUNTY SCOPING FORM

EXHIBIT B

SCOPING AGREEMENT FOR TRAFFIC IMPACT STUDY

This letter acknowledges the Riverside County Transportation Department requirements for traffic impact analysis of the following project. The analysis must follow the Riverside County Transportation Department Traffic Study Guidelines dated December 2020.

Case No. TTM No. 38910
Related Cases-
SP No.
EIR No.
GPA No.
CZ No.
Project Name: Highland Grove II (TTM No. 38910)
Project Address: Either side of Street A, north El Sobrante Road
Project Description: 128 single family detached residential dwelling units

	Consultant	Developer Representative
Name:	Urban Crossroads Inc. - Charlene So	FirstCarbon Solutions - Cecilia So
Address:	1133 Camelback St. #8329	
	Newport Beach, CA 92658	
Telephone:	(949) 861-0177	949-244-3483
email:	cso@urbanxroads.com	cso@fcs-intl.com

A. Trip Generation Source: ITE Trip Generation Manual (11th Edition, 2021)

Current GP Land Use: RC-MDR & RC-LDR — Proposed Land Use: RC-MDR
Current Zoning: A-1-10 & A-P — Proposed Zoning: R-1-10,000

	Current Trip Generation			Proposed Trip Generation		
	In	Out	Total	In	Out	Total
AM Trips				**23**	**66**	**89**
PM Trips				**23**	**66**	**89**

Internal Trip Allowance ☐ Yes ■ No (0 % Trip Discount)
Pass-By Trip Allowance ☐ Yes ■ No (0 % Trip Discount)

A passby trip discount of 25% is allowed for appropriate land uses. The passby trips at adjacent study area intersections and project driveways shall be indicated on a report figure.

B. Trip Geographic Distribution:

N **30** % S **9** % E **39** % W **22** %

C. Background Traffic

Project Build-out Year: 2030 — Annual Ambient Growth Rate: 2 %
Phase Year(s) N/A

Other area Projects to be analyzed: To be provided by the County
Model/Forecast Methodology: Not Applicable

URBAN CROSSROADS

D. Study Intersections: *(NOTE: Subject to revision after other projects, trip generation and distribution are determined, or comments form other agencies).* (See Exhibit 2)

1. La Sierra Av. & SR-91 WB Ramps
2. La Sierra Av. & SR-91 EB Ramps
3. La Sierra Av. & Indiana Av.
4. La Sierra Av. & Victoria Av.
5. La Sierra Av. & McAllister Pkwy.
6. La Sierra Av. & El Sobrante Rd.
7. McAllister Pkwy. & El Sobrante Rd.
8. Street A & El Sobrante Rd. - Future Itnersection
9.
10.
11.
12.
13.
14.
15.
16.
17.
18.
19.
20.

E. Study Roadway Segments: *(NOTE: Subject to revision after other projects, trip generation and distribution are determined, or comments form other agencies).*

1.
2.

F. Other Jurisdictional Impacts

Is this project within a City's Sphere of influence or one mile radius of City boundaries? ☐ Yes ■ No

If so, name of City jurisdiction:

G. Site Plan (please attach reduced copy)

H. Specific issues to be addressed in the Study (in addition to the standard analysis described in the Guideline) (To be filled out by Transportation Department)
(NOTE: If the traffic study states that "a traffic signal is warranted" (or "a traffic signal appears to be warranted", or similar statement) at an existing unsignalized intersection under existing conditions, 8-hour approach traffic volume information must be submitted in addition to the peak hourly turning movement counts for that intersection.

I. Existing Conditions
Traffic count data must be new or recent. Provide traffic count dates if using other than new counts.
Date of counts: New counts to be conducted once scoping agreement is approved

***NOTE* Traffic Study Submittal Form and appropriate fee must be submitted with, or prior to submittal of this form. Transportation Department staff will not process the Scoping Agreement prior to receipt of the fee.**

Recommended by:

Charlene So — 3/12/2024

Consultant's Representative — Date

Scoping Agreement Revised on 04/19/2024

Approved Scoping Agreement:

Eva Covarrubias — 4/22/2024

Riverside County Transportation Department — Date

URBAN CROSSROADS

ATTACHMENT B: 2023 TRAFFIC COUNTS

Counts Unlimited, Inc.
PO Box 1178
Corona, CA 92878
(951) 268-6268

City of Riverside
N/S: La Sierra Avenue
E/W: SR-91 Westbound Ramps
Weather: Clear

File Name : 01_RIV_La S_91W AM
Site Code : 05123396
Start Date : 8/17/2023
Page No : 1

Groups Printed- Passenger Vehicles - Large 2 Axle Vehicles - 3 Axle Vehicles - 4+ Axle Trucks

	La Sierra Avenue Southbound					SR-91 Westbound Off Ramp Westbound					La Sierra Avenue Northbound					SR-91 Westbound On Ramp Eastbound							
Start Time	Left	Thru	Right	RTOR	App. Total	Left	Thru	Right	RTOR	App. Total	Left	Thru	Right	RTOR	App. Total	Left	Thru	Right	RTOR	App. Total	Exclu. Total	Inclu. Total	Int. Total
07:00 AM	0	172	41	3	213	45	0	63	42	108	139	169	0	0	308	0	0	0	0	0	45	629	674
07:15 AM	0	178	29	7	207	59	0	109	56	168	156	232	0	0	388	0	0	0	0	0	63	763	826
07:30 AM	0	251	36	8	287	57	0	94	64	151	118	218	0	0	336	0	0	0	0	0	72	774	846
07:45 AM	0	289	26	6	315	66	0	104	46	170	147	324	0	0	471	0	0	0	0	0	52	956	1008
Total	0	890	132	24	1022	227	0	370	208	597	560	943	0	0	1503	0	0	0	0	0	232	3122	3354
08:00 AM	0	231	28	11	259	65	0	126	25	191	143	415	0	0	558	0	0	0	0	0	36	1008	1044
08:15 AM	0	201	35	14	236	48	1	119	53	168	134	341	0	0	475	0	0	0	0	0	67	879	946
08:30 AM	0	168	24	15	192	40	2	112	58	154	135	258	0	0	393	0	0	0	0	0	73	739	812
08:45 AM	0	148	32	18	180	32	0	84	42	116	135	237	0	0	372	0	0	0	0	0	60	668	728
Total	0	748	119	58	867	185	3	441	178	629	547	1251	0	0	1798	0	0	0	0	0	236	3294	3530
Grand Total	0	1638	251	82	1889	412	3	811	386	1226	1107	2194	0	0	3301	0	0	0	0	0	468	6416	6884
Apprch %	0	86.7	13.3			33.6	0.2	66.2			33.5	66.5	0			0	0	0					
Total %	0	25.5	3.9		29.4	6.4	0	12.6		19.1	17.3	34.2	0		51.4	0	0	0		0	6.8	93.2	
Passenger Vehicles	0	1600	246		1928	401	2	798		1581	1076	2143	0		3219	0	0	0		0	0	0	6728
% Passenger Vehicles	0	97.7	98	100	97.8	97.3	66.7	98.4	98.4	98.1	97.2	97.7	0	0	97.5	0	0	0	0	0	0	0	97.7
Large 2 Axle Vehicles	0	23	4		27	10	1	9		25	20	40	0		60	0	0	0		0	0	0	112
% Large 2 Axle Vehicles	0	1.4	1.6	0	1.4	2.4	33.3	1.1	1.3	1.6	1.8	1.8	0	0	1.8	0	0	0	0	0	0	0	1.6
3 Axle Vehicles	0	9	1		10	0	0	3		4	5	5	0		10	0	0	0		0	0	0	24
% 3 Axle Vehicles	0	0.5	0.4	0	0.5	0	0	0.4	0.3	0.2	0.5	0.2	0	0	0.3	0	0	0	0	0	0	0	0.3
4+ Axle Trucks	0	6	0		6	1	0	1		2	6	6	0		12	0	0	0		0	0	0	20
% 4+ Axle Trucks	0	0.4	0	0	0.3	0.2	0	0.1	0	0.1	0.5	0.3	0	0	0.4	0	0	0	0	0	0	0	0.3

	La Sierra Avenue Southbound				SR-91 Westbound Off Ramp Westbound				La Sierra Avenue Northbound				SR-91 Westbound On Ramp Eastbound				
Start Time	Left	Thru	Right	App. Total	Left	Thru	Right	App. Total	Left	Thru	Right	App. Total	Left	Thru	Right	App. Total	Int. Total
Peak Hour Analysis From 07:00 AM to 08:45 AM - Peak 1 of 1																	
Peak Hour for Entire Intersection Begins at 07:30 AM																	
07:30 AM	0	251	**36**	287	57	0	94	151	118	218	0	336	0	0	0	0	774
07:45 AM	0	**289**	26	**315**	**66**	0	104	170	**147**	324	0	471	0	0	0	0	956
08:00 AM	0	231	28	259	65	0	**126**	**191**	143	**415**	0	**558**	0	0	0	0	**1008**
08:15 AM	0	201	35	236	48	**1**	119	168	134	341	0	475	0	0	0	0	879
Total Volume	0	972	125	1097	236	1	443	680	542	1298	0	1840	0	0	0	0	3617
% App. Total	0	88.6	11.4		34.7	0.1	65.1		29.5	70.5	0		0	0	0		
PHF	.000	.841	.868	.871	.894	.250	.879	.890	.922	.782	.000	.824	.000	.000	.000	.000	.897

Counts Unlimited, Inc.
PO Box 1178
Corona, CA 92878
(951) 268-6268

City of Riverside
N/S: La Sierra Avenue
E/W: SR-91 Westbound Ramps
Weather: Clear

File Name : 01_RIV_La S_91W AM
Site Code : 05123396
Start Date : 8/17/2023
Page No : 2

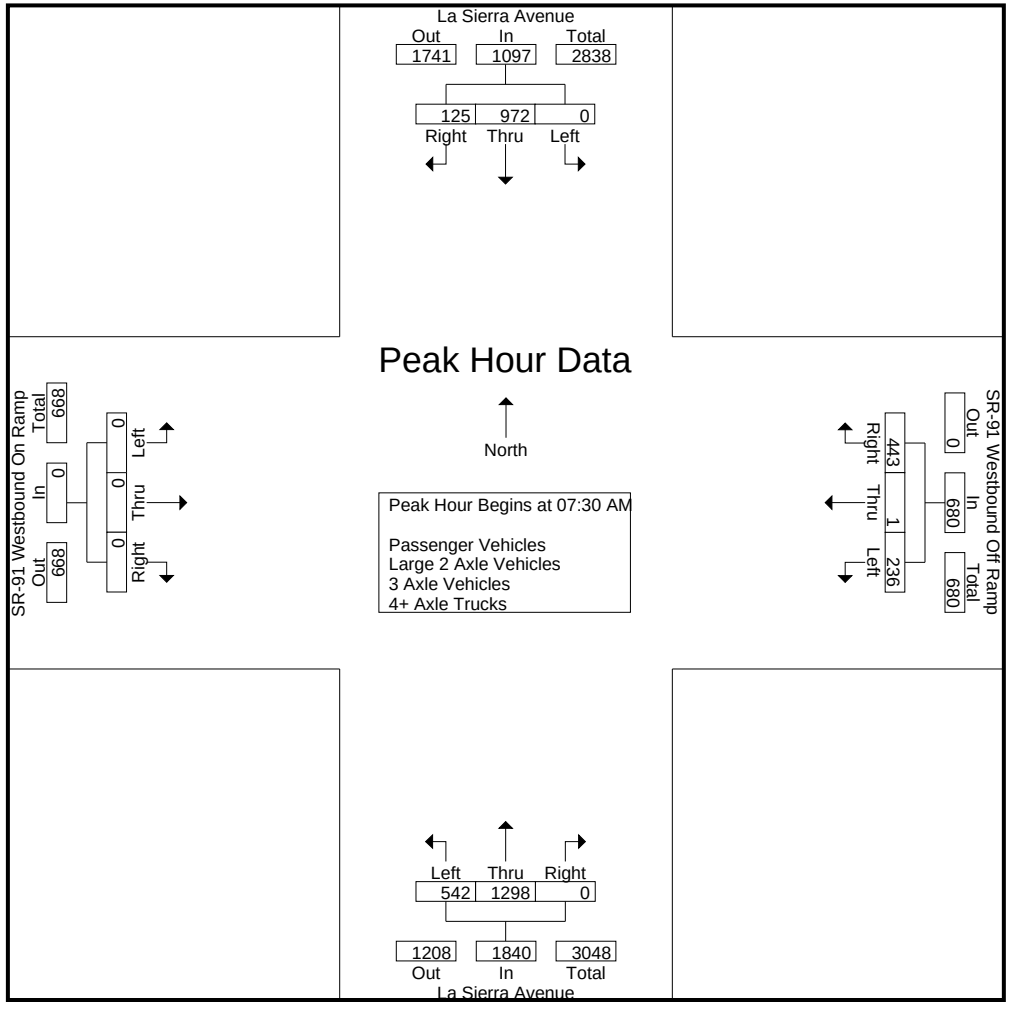

Counts Unlimited, Inc.
PO Box 1178
Corona, CA 92878
(951) 268-6268

City of Riverside
N/S: La Sierra Avenue
E/W: SR-91 Westbound Ramps
Weather: Clear

File Name : 01_RIV_La S_91W AM
Site Code : 05123396
Start Date : 8/17/2023

	La Sierra Avenue Southbound				SR-91 Westbound Off Ramp Westbound				La Sierra Avenue Northbound				SR-91 Westbound On Ramp Eastbound				
Start Time	Left	Thru	Right	App. Total	Left	Thru	Right	App. Total	Left	Thru	Right	App. Total	Left	Thru	Right	App. Total	Int. Total
Peak Hour Analysis From 07:00 AM to 08:45 AM - Peak 1 of 1																	
Peak Hour for Each Approach Begins at:																	
	07:30 AM				07:45 AM				07:45 AM				07:00 AM				
+0 mins.	0	251	**36**	287	**66**	0	104	170	**147**	324	0	471	0	0	0	0	
+15 mins.	0	**289**	26	**315**	65	0	**126**	**191**	143	**415**	0	**558**	0	0	0	0	
+30 mins.	0	231	28	259	48	1	119	168	134	341	0	475	0	0	0	0	
+45 mins.	0	201	35	236	40	**2**	112	154	135	258	0	393	0	0	0	0	
Total Volume	0	972	125	1097	219	3	461	683	559	1338	0	1897	0	0	0	0	
% App. Total	0	88.6	11.4		32.1	0.4	67.5		29.5	70.5	0		0	0	0		
PHF	.000	.841	.868	.871	.830	.375	.915	.894	.951	.806	.000	.850	.000	.000	.000	.000	

Counts Unlimited, Inc.
PO Box 1178
Corona, CA 92878
(951) 268-6268

City of Riverside
N/S: La Sierra Avenue
E/W: SR-91 Westbound Ramps
Weather: Clear

File Name : 01_RIV_La S_91W AM
Site Code : 05123396
Start Date : 8/17/2023
Page No : 1

Groups Printed- Passenger Vehicles

	La Sierra Avenue Southbound					SR-91 Westbound Off Ramp Westbound					La Sierra Avenue Northbound					SR-91 Westbound On Ramp Eastbound							
Start Time	Left	Thru	Right	RTOR	App. Total	Left	Thru	Right	RTOR	App. Total	Left	Thru	Right	RTOR	App. Total	Left	Thru	Right	RTOR	App. Total	Exclu. Total	Inclu. Total	Int. Total
07:00 AM	0	167	40	3	207	41	0	62	41	103	134	163	0	0	297	0	0	0	0	0	44	607	651
07:15 AM	0	172	29	7	201	58	0	105	54	163	154	227	0	0	381	0	0	0	0	0	61	745	806
07:30 AM	0	246	36	8	282	56	0	93	64	149	114	211	0	0	325	0	0	0	0	0	72	756	828
07:45 AM	0	283	26	6	309	65	0	103	46	168	143	316	0	0	459	0	0	0	0	0	52	936	988
Total	0	868	131	24	999	220	0	363	205	583	545	917	0	0	1462	0	0	0	0	0	229	3044	3273
08:00 AM	0	224	27	11	251	65	0	125	25	190	142	407	0	0	549	0	0	0	0	0	36	990	1026
08:15 AM	0	197	33	14	230	46	1	118	52	165	126	336	0	0	462	0	0	0	0	0	66	857	923
08:30 AM	0	166	23	15	189	39	1	110	56	150	131	249	0	0	380	0	0	0	0	0	71	719	790
08:45 AM	0	145	32	18	177	31	0	82	42	113	132	234	0	0	366	0	0	0	0	0	60	656	716
Total	0	732	115	58	847	181	2	435	175	618	531	1226	0	0	1757	0	0	0	0	0	233	3222	3455
Grand Total	0	1600	246	82	1846	401	2	798	380	1201	1076	2143	0	0	3219	0	0	0	0	0	462	6266	6728
Apprch %	0	86.7	13.3			33.4	0.2	66.4			33.4	66.6	0			0	0	0					
Total %	0	25.5	3.9		29.5	6.4	0	12.7		19.2	17.2	34.2	0		51.4	0	0	0		0	6.9	93.1	

	La Sierra Avenue Southbound				SR-91 Westbound Off Ramp Westbound				La Sierra Avenue Northbound				SR-91 Westbound On Ramp Eastbound				
Start Time	Left	Thru	Right	App. Total	Left	Thru	Right	App. Total	Left	Thru	Right	App. Total	Left	Thru	Right	App. Total	Int. Total
Peak Hour Analysis From 07:30 AM to 08:15 AM - Peak 1 of 1																	
Peak Hour for Entire Intersection Begins at 07:30 AM																	
07:30 AM	0	246	**36**	282	56	0	93	149	114	211	0	325	0	0	0	0	756
07:45 AM	0	**283**	26	**309**	**65**	0	103	168	**143**	316	0	459	0	0	0	0	936
08:00 AM	0	224	27	251	65	0	**125**	**190**	142	**407**	0	**549**	0	0	0	0	**990**
08:15 AM	0	197	33	230	46	**1**	118	165	126	336	0	462	0	0	0	0	857
Total Volume	0	950	122	1072	232	1	439	672	525	1270	0	1795	0	0	0	0	3539
% App. Total	0	88.6	11.4		34.5	0.1	65.3		29.2	70.8	0		0	0	0		
PHF	.000	.839	.847	.867	.892	.250	.878	.884	.918	.780	.000	.817	.000	.000	.000	.000	.894

Counts Unlimited, Inc.
PO Box 1178
Corona, CA 92878
(951) 268-6268

City of Riverside
N/S: La Sierra Avenue
E/W: SR-91 Westbound Ramps
Weather: Clear

File Name : 01_RIV_La S_91W AM
Site Code : 05123396
Start Date : 8/17/2023
Page No : 2

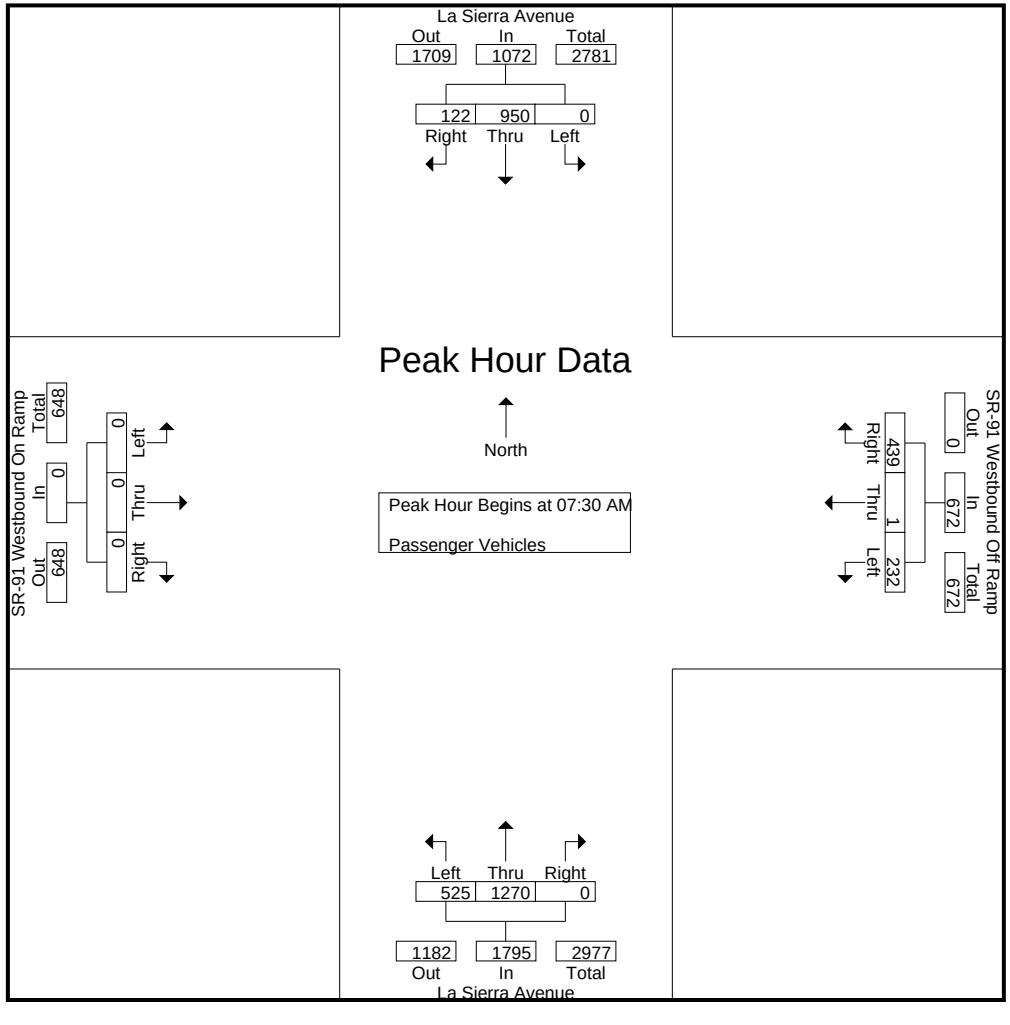

Counts Unlimited, Inc.
PO Box 1178
Corona, CA 92878
(951) 268-6268

City of Riverside
N/S: La Sierra Avenue
E/W: SR-91 Westbound Ramps
Weather: Clear

File Name : 01_RIV_La S_91W AM
Site Code : 05123396
Start Date : 8/17/2023

	La Sierra Avenue Southbound				SR-91 Westbound Off Ramp Westbound				La Sierra Avenue Northbound				SR-91 Westbound On Ramp Eastbound				
Start Time	Left	Thru	Right	App. Total	Left	Thru	Right	App. Total	Left	Thru	Right	App. Total	Left	Thru	Right	App. Total	Int. Total
Peak Hour Analysis From 07:30 AM to 08:15 AM - Peak 1 of 1																	
Peak Hour for Each Approach Begins at:																	
	07:30 AM				07:30 AM				07:30 AM				07:30 AM				
+0 mins.	0	246	**36**	282	56	0	93	149	114	211	0	325	0	0	0	0	
+15 mins.	0	**283**	26	**309**	**65**	0	103	168	**143**	316	0	459	0	0	0	0	
+30 mins.	0	224	27	251	65	0	**125**	**190**	142	**407**	0	**549**	0	0	0	0	
+45 mins.	0	197	33	230	46	**1**	118	165	126	336	0	462	0	0	0	0	
Total Volume	0	950	122	1072	232	1	439	672	525	1270	0	1795	0	0	0	0	
% App. Total	0	88.6	11.4		34.5	0.1	65.3		29.2	70.8	0		0	0	0		
PHF	.000	.839	.847	.867	.892	.250	.878	.884	.918	.780	.000	.817	.000	.000	.000	.000	

Counts Unlimited, Inc.
PO Box 1178
Corona, CA 92878
(951) 268-6268

City of Riverside
N/S: La Sierra Avenue
E/W: SR-91 Westbound Ramps
Weather: Clear

File Name : 01_RIV_La S_91W AM
Site Code : 05123396
Start Date : 8/17/2023
Page No : 1

Groups Printed- Large 2 Axle Vehicles

	La Sierra Avenue Southbound					SR-91 Westbound Off Ramp Westbound					La Sierra Avenue Northbound					SR-91 Westbound On Ramp Eastbound							
Start Time	Left	Thru	Right	RTOR	App. Total	Left	Thru	Right	RTOR	App. Total	Left	Thru	Right	RTOR	App. Total	Left	Thru	Right	RTOR	App. Total	Exclu. Total	Inclu. Total	Int. Total
07:00 AM	0	4	1	0	5	3	0	1	1	4	4	4	0	0	8	0	0	0	0	0	1	17	18
07:15 AM	0	3	0	0	3	1	0	4	2	5	1	2	0	0	3	0	0	0	0	0	2	11	13
07:30 AM	0	3	0	0	3	1	0	0	0	1	4	7	0	0	11	0	0	0	0	0	0	15	15
07:45 AM	0	3	0	0	3	1	0	0	0	1	1	6	0	0	7	0	0	0	0	0	0	11	11
Total	0	13	1	0	14	6	0	5	3	11	10	19	0	0	29	0	0	0	0	0	3	54	57
08:00 AM	0	4	1	0	5	0	0	1	0	1	1	7	0	0	8	0	0	0	0	0	0	14	14
08:15 AM	0	3	1	0	4	2	0	1	1	3	6	5	0	0	11	0	0	0	0	0	1	18	19
08:30 AM	0	0	1	0	1	1	1	1	1	3	3	6	0	0	9	0	0	0	0	0	1	13	14
08:45 AM	0	3	0	0	3	1	0	1	0	2	0	3	0	0	3	0	0	0	0	0	0	8	8
Total	0	10	3	0	13	4	1	4	2	9	10	21	0	0	31	0	0	0	0	0	2	53	55
Grand Total	0	23	4	0	27	10	1	9	5	20	20	40	0	0	60	0	0	0	0	0	5	107	112
Apprch %	0	85.2	14.8			50	5	45			33.3	66.7	0			0	0	0					
Total %	0	21.5	3.7		25.2	9.3	0.9	8.4		18.7	18.7	37.4	0		56.1	0	0	0		0	4.5	95.5	

	La Sierra Avenue Southbound				SR-91 Westbound Off Ramp Westbound				La Sierra Avenue Northbound				SR-91 Westbound On Ramp Eastbound				
Start Time	Left	Thru	Right	App. Total	Left	Thru	Right	App. Total	Left	Thru	Right	App. Total	Left	Thru	Right	App. Total	Int. Total
Peak Hour Analysis From 07:30 AM to 08:15 AM - Peak 1 of 1																	
Peak Hour for Entire Intersection Begins at 07:30 AM																	
07:30 AM	0	3	0	3	1	0	0	1	4	**7**	0	**11**	0	0	0	0	15
07:45 AM	0	3	0	3	1	0	0	1	1	6	0	7	0	0	0	0	11
08:00 AM	0	**4**	**1**	**5**	0	0	**1**	1	1	7	0	8	0	0	0	0	14
08:15 AM	0	3	1	4	**2**	0	1	**3**	**6**	5	0	11	0	0	0	0	**18**
Total Volume	0	13	2	15	4	0	2	6	12	25	0	37	0	0	0	0	58
% App. Total	0	86.7	13.3		66.7	0	33.3		32.4	67.6	0		0	0	0		
PHF	.000	.813	.500	.750	.500	.000	.500	.500	.500	.893	.000	.841	.000	.000	.000	.000	.806

Counts Unlimited, Inc.
PO Box 1178
Corona, CA 92878
(951) 268-6268

City of Riverside
N/S: La Sierra Avenue
E/W: SR-91 Westbound Ramps
Weather: Clear

File Name : 01_RIV_La S_91W AM
Site Code : 05123396
Start Date : 8/17/2023
Page No : 2

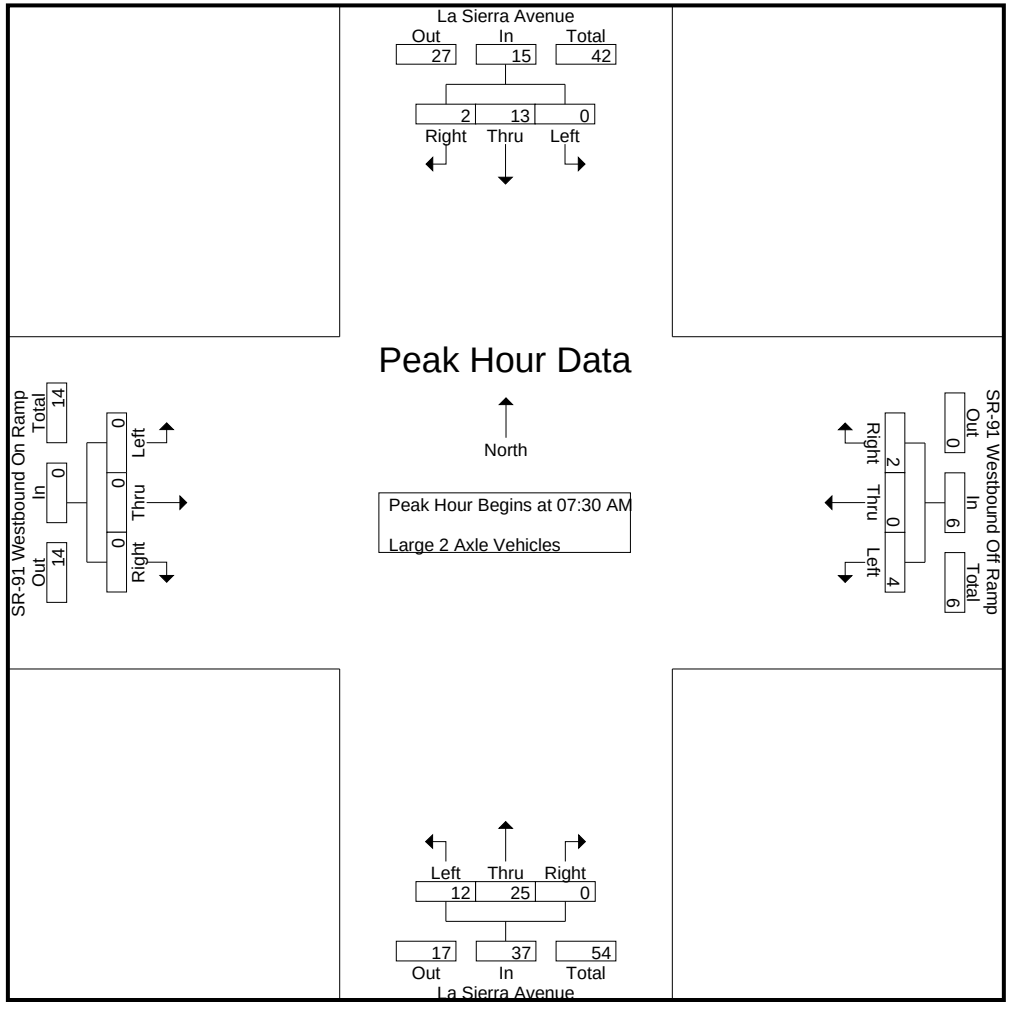

Counts Unlimited, Inc.
PO Box 1178
Corona, CA 92878
(951) 268-6268

City of Riverside
N/S: La Sierra Avenue
E/W: SR-91 Westbound Ramps
Weather: Clear

File Name : 01_RIV_La S_91W AM
Site Code : 05123396
Start Date : 8/17/2023

	La Sierra Avenue Southbound				SR-91 Westbound Off Ramp Westbound				La Sierra Avenue Northbound				SR-91 Westbound On Ramp Eastbound				
Start Time	Left	Thru	Right	App. Total	Left	Thru	Right	App. Total	Left	Thru	Right	App. Total	Left	Thru	Right	App. Total	Int. Total
Peak Hour Analysis From 07:30 AM to 08:15 AM - Peak 1 of 1																	
Peak Hour for Each Approach Begins at:																	
	07:30 AM				07:30 AM				07:30 AM				07:30 AM				
+0 mins.	0	3	0	3	1	0	0	1	4	**7**	0	**11**	0	0	0	0	
+15 mins.	0	3	0	3	1	0	0	1	1	6	0	7	0	0	0	0	
+30 mins.	0	**4**	**1**	**5**	0	0	**1**	1	1	7	0	8	0	0	0	0	
+45 mins.	0	3	1	4	**2**	0	1	**3**	**6**	5	0	11	0	0	0	0	
Total Volume	0	13	2	15	4	0	2	6	12	25	0	37	0	0	0	0	
% App. Total	0	86.7	13.3		66.7	0	33.3		32.4	67.6	0		0	0	0		
PHF	.000	.813	.500	.750	.500	.000	.500	.500	.500	.893	.000	.841	.000	.000	.000	.000	

Counts Unlimited, Inc.
PO Box 1178
Corona, CA 92878
(951) 268-6268

City of Riverside
N/S: La Sierra Avenue
E/W: SR-91 Westbound Ramps
Weather: Clear

File Name : 01_RIV_La S_91W AM
Site Code : 05123396
Start Date : 8/17/2023
Page No : 1

Groups Printed- 3 Axle Vehicles

	La Sierra Avenue Southbound					SR-91 Westbound Off Ramp Westbound					La Sierra Avenue Northbound					SR-91 Westbound On Ramp Eastbound							
Start Time	Left	Thru	Right	RTOR	App. Total	Left	Thru	Right	RTOR	App. Total	Left	Thru	Right	RTOR	App. Total	Left	Thru	Right	RTOR	App. Total	Exclu. Total	Inclu. Total	Int. Total
07:00 AM	0	1	0	0	1	0	0	0	0	0	1	1	0	0	2	0	0	0	0	0	0	3	3
07:15 AM	0	2	0	0	2	0	0	0	0	0	0	2	0	0	2	0	0	0	0	0	0	4	4
07:30 AM	0	1	0	0	1	0	0	1	0	1	0	0	0	0	0	0	0	0	0	0	0	2	2
07:45 AM	0	1	0	0	1	0	0	0	0	0	1	0	0	0	1	0	0	0	0	0	0	2	2
Total	0	5	0	0	5	0	0	1	0	1	2	3	0	0	5	0	0	0	0	0	0	11	11
08:00 AM	0	2	0	0	2	0	0	0	0	0	0	0	0	0	0	0	0	0	0	0	0	2	2
08:15 AM	0	1	1	0	2	0	0	0	0	0	0	0	0	0	0	0	0	0	0	0	0	2	2
08:30 AM	0	1	0	0	1	0	0	1	1	1	0	2	0	0	2	0	0	0	0	0	1	4	5
08:45 AM	0	0	0	0	0	0	0	1	0	1	3	0	0	0	3	0	0	0	0	0	0	4	4
Total	0	4	1	0	5	0	0	2	1	2	3	2	0	0	5	0	0	0	0	0	1	12	13
Grand Total	0	9	1	0	10	0	0	3	1	3	5	5	0	0	10	0	0	0	0	0	1	23	24
Apprch %	0	90	10			0	0	100			50	50	0			0	0	0					
Total %	0	39.1	4.3		43.5	0	0	13		13	21.7	21.7	0		43.5	0	0	0		0	4.2	95.8	

	La Sierra Avenue Southbound				SR-91 Westbound Off Ramp Westbound				La Sierra Avenue Northbound				SR-91 Westbound On Ramp Eastbound				
Start Time	Left	Thru	Right	App. Total	Left	Thru	Right	App. Total	Left	Thru	Right	App. Total	Left	Thru	Right	App. Total	Int. Total
Peak Hour Analysis From 07:30 AM to 08:15 AM - Peak 1 of 1																	
Peak Hour for Entire Intersection Begins at 07:30 AM																	
07:30 AM	0	1	0	1	0	0	**1**	**1**	0	0	0	0	0	0	0	0	**2**
07:45 AM	0	1	0	1	0	0	0	0	**1**	0	0	**1**	0	0	0	0	2
08:00 AM	0	**2**	0	**2**	0	0	0	0	0	0	0	0	0	0	0	0	2
08:15 AM	0	1	**1**	2	0	0	0	0	0	0	0	0	0	0	0	0	2
Total Volume	0	5	1	6	0	0	1	1	1	0	0	1	0	0	0	0	8
% App. Total	0	83.3	16.7		0	0	100		100	0	0		0	0	0		
PHF	.000	.625	.250	.750	.000	.000	.250	.250	.250	.000	.000	.250	.000	.000	.000	.000	1.00

Counts Unlimited, Inc.
PO Box 1178
Corona, CA 92878
(951) 268-6268

City of Riverside
N/S: La Sierra Avenue
E/W: SR-91 Westbound Ramps
Weather: Clear

File Name : 01_RIV_La S_91W AM
Site Code : 05123396
Start Date : 8/17/2023
Page No : 2

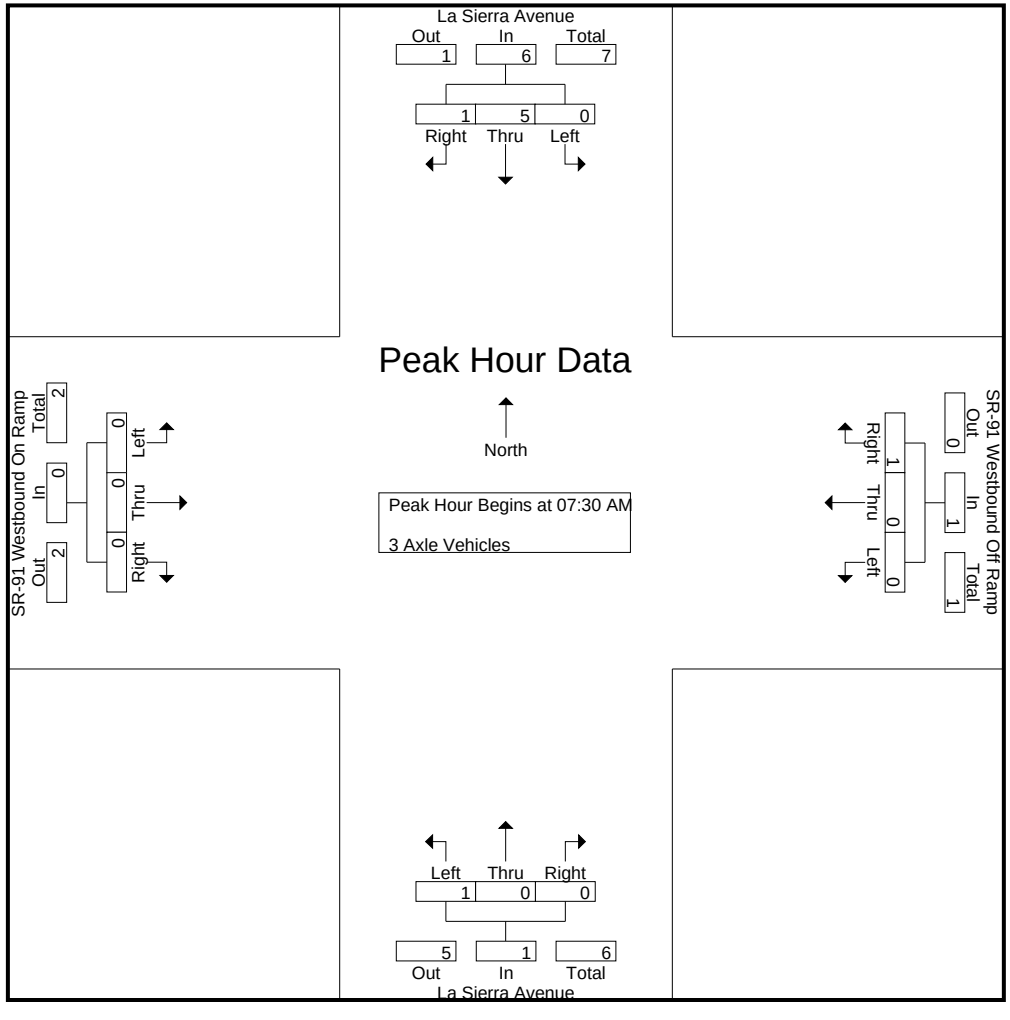

Counts Unlimited, Inc.
PO Box 1178
Corona, CA 92878
(951) 268-6268

City of Riverside
N/S: La Sierra Avenue
E/W: SR-91 Westbound Ramps
Weather: Clear

File Name : 01_RIV_La S_91W AM
Site Code : 05123396
Start Date : 8/17/2023

	La Sierra Avenue Southbound				SR-91 Westbound Off Ramp Westbound				La Sierra Avenue Northbound				SR-91 Westbound On Ramp Eastbound				
Start Time	Left	Thru	Right	App. Total	Left	Thru	Right	App. Total	Left	Thru	Right	App. Total	Left	Thru	Right	App. Total	Int. Total
Peak Hour Analysis From 07:30 AM to 08:15 AM - Peak 1 of 1																	
Peak Hour for Each Approach Begins at:																	
	07:30 AM				07:30 AM				07:30 AM				07:30 AM				
+0 mins.	0	1	0	1	0	0	**1**	**1**	0	0	0	0	0	0	0	0	
+15 mins.	0	1	0	1	0	0	0	0	**1**	0	0	**1**	0	0	0	0	
+30 mins.	0	**2**	0	**2**	0	0	0	0	0	0	0	0	0	0	0	0	
+45 mins.	0	1	**1**	2	0	0	0	0	0	0	0	0	0	0	0	0	
Total Volume	0	5	1	6	0	0	1	1	1	0	0	1	0	0	0	0	
% App. Total	0	83.3	16.7		0	0	100		100	0	0		0	0	0		
PHF	.000	.625	.250	.750	.000	.000	.250	.250	.250	.000	.000	.250	.000	.000	.000	.000	

Counts Unlimited, Inc.
PO Box 1178
Corona, CA 92878
(951) 268-6268

City of Riverside
N/S: La Sierra Avenue
E/W: SR-91 Westbound Ramps
Weather: Clear

File Name : 01_RIV_La S_91W AM
Site Code : 05123396
Start Date : 8/17/2023
Page No : 1

Groups Printed- 4+ Axle Trucks

	La Sierra Avenue Southbound					SR-91 Westbound Off Ramp Westbound					La Sierra Avenue Northbound					SR-91 Westbound On Ramp Eastbound							
Start Time	Left	Thru	Right	RTOR	App. Total	Left	Thru	Right	RTOR	App. Total	Left	Thru	Right	RTOR	App. Total	Left	Thru	Right	RTOR	App. Total	Exclu. Total	Inclu. Total	Int. Total
07:00 AM	0	0	0	0	0	1	0	0	0	1	0	1	0	0	1	0	0	0	0	0	0	2	2
07:15 AM	0	1	0	0	1	0	0	0	0	0	1	1	0	0	2	0	0	0	0	0	0	3	3
07:30 AM	0	1	0	0	1	0	0	0	0	0	0	0	0	0	0	0	0	0	0	0	0	1	1
07:45 AM	0	2	0	0	2	0	0	1	0	1	2	2	0	0	4	0	0	0	0	0	0	7	7
Total	0	4	0	0	4	1	0	1	0	2	3	4	0	0	7	0	0	0	0	0	0	13	13
08:00 AM	0	1	0	0	1	0	0	0	0	0	0	1	0	0	1	0	0	0	0	0	0	2	2
08:15 AM	0	0	0	0	0	0	0	0	0	0	2	0	0	0	2	0	0	0	0	0	0	2	2
08:30 AM	0	1	0	0	1	0	0	0	0	0	1	1	0	0	2	0	0	0	0	0	0	3	3
08:45 AM	0	0	0	0	0	0	0	0	0	0	0	0	0	0	0	0	0	0	0	0	0	0	0
Total	0	2	0	0	2	0	0	0	0	0	3	2	0	0	5	0	0	0	0	0	0	7	7
Grand Total	0	6	0	0	6	1	0	1	0	2	6	6	0	0	12	0	0	0	0	0	0	20	20
Apprch %	0	100	0			50	0	50			50	50	0			0	0	0					
Total %	0	30	0		30	5	0	5		10	30	30	0		60	0	0	0		0	0	100	

	La Sierra Avenue Southbound				SR-91 Westbound Off Ramp Westbound				La Sierra Avenue Northbound				SR-91 Westbound On Ramp Eastbound				
Start Time	Left	Thru	Right	App. Total	Left	Thru	Right	App. Total	Left	Thru	Right	App. Total	Left	Thru	Right	App. Total	Int. Total
Peak Hour Analysis From 07:30 AM to 08:15 AM - Peak 1 of 1																	
Peak Hour for Entire Intersection Begins at 07:30 AM																	
07:30 AM	0	1	0	1	0	0	0	0	0	0	0	0	0	0	0	0	1
07:45 AM	0	**2**	0	**2**	0	0	**1**	**1**	**2**	**2**	0	**4**	0	0	0	0	**7**
08:00 AM	0	1	0	1	0	0	0	0	0	1	0	1	0	0	0	0	2
08:15 AM	0	0	0	0	0	0	0	0	2	0	0	2	0	0	0	0	2
Total Volume	0	4	0	4	0	0	1	1	4	3	0	7	0	0	0	0	12
% App. Total	0	100	0		0	0	100		57.1	42.9	0		0	0	0		
PHF	.000	.500	.000	.500	.000	.000	.250	.250	.500	.375	.000	.438	.000	.000	.000	.000	.429

Counts Unlimited, Inc.
PO Box 1178
Corona, CA 92878
(951) 268-6268

City of Riverside
N/S: La Sierra Avenue
E/W: SR-91 Westbound Ramps
Weather: Clear

File Name : 01_RIV_La S_91W AM
Site Code : 05123396
Start Date : 8/17/2023
Page No : 2

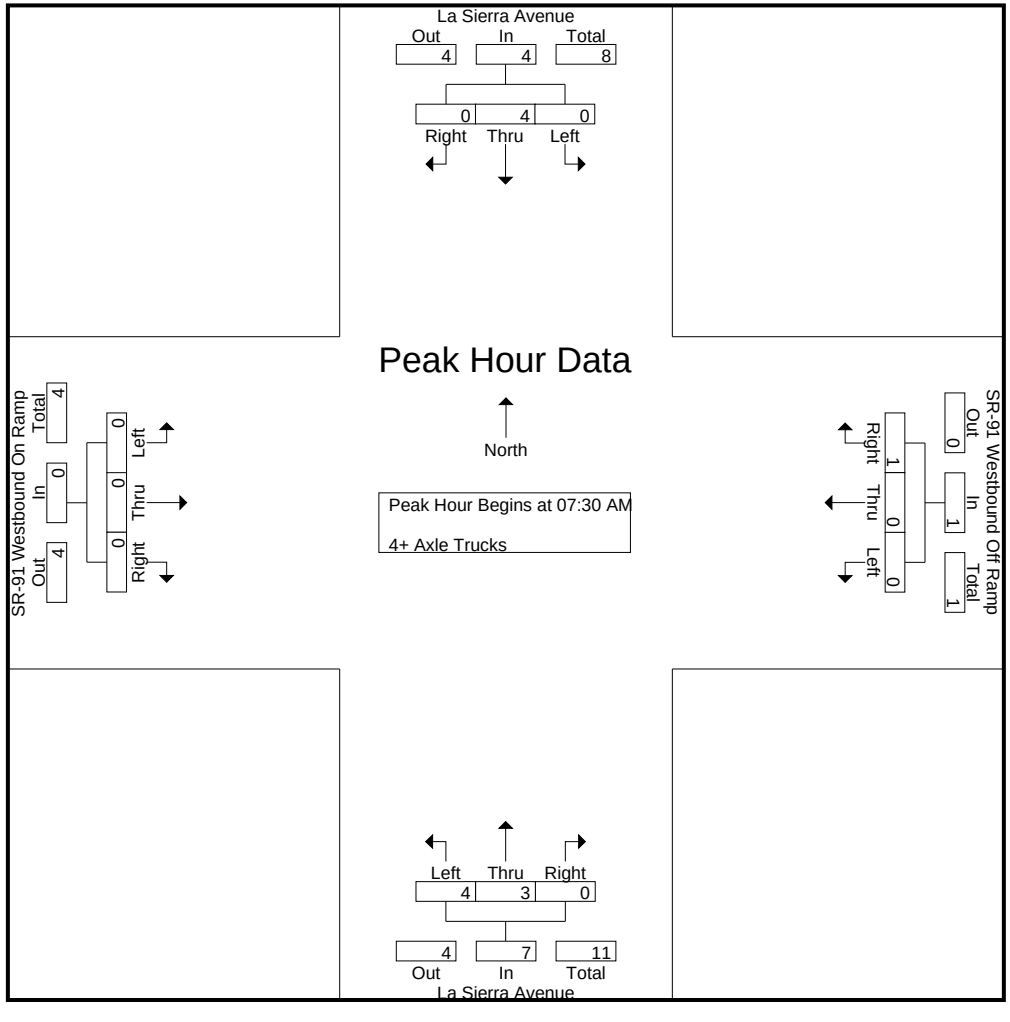

Counts Unlimited, Inc.
PO Box 1178
Corona, CA 92878
(951) 268-6268

City of Riverside
N/S: La Sierra Avenue
E/W: SR-91 Westbound Ramps
Weather: Clear

File Name : 01_RIV_La S_91W AM
Site Code : 05123396
Start Date : 8/17/2023

	La Sierra Avenue Southbound				SR-91 Westbound Off Ramp Westbound				La Sierra Avenue Northbound				SR-91 Westbound On Ramp Eastbound				
Start Time	Left	Thru	Right	App. Total	Left	Thru	Right	App. Total	Left	Thru	Right	App. Total	Left	Thru	Right	App. Total	Int. Total
Peak Hour Analysis From 07:30 AM to 08:15 AM - Peak 1 of 1																	
Peak Hour for Each Approach Begins at:																	
	07:30 AM				07:30 AM				07:30 AM				07:30 AM				
+0 mins.	0	1	0	1	0	0	0	0	0	0	0	0	0	0	0	0	
+15 mins.	0	**2**	0	**2**	0	0	**1**	**1**	**2**	**2**	0	**4**	0	0	0	0	
+30 mins.	0	1	0	1	0	0	0	0	0	1	0	1	0	0	0	0	
+45 mins.	0	0	0	0	0	0	0	0	2	0	0	2	0	0	0	0	
Total Volume	0	4	0	4	0	0	1	1	4	3	0	7	0	0	0	0	
% App. Total	0	100	0		0	0	100		57.1	42.9	0		0	0	0		
PHF	.000	.500	.000	.500	.000	.000	.250	.250	.500	.375	.000	.438	.000	.000	.000	.000	

Counts Unlimited, Inc.
PO Box 1178
Corona, CA 92878
(951) 268-6268

City of Riverside
N/S: La Sierra Avenue
E/W: SR-91 Westbound Ramps
Weather: Clear

File Name : 01_RIV_La S_91W PM
Site Code : 05123396
Start Date : 8/17/2023
Page No : 1

Groups Printed- Passenger Vehicles - Large 2 Axle Vehicles - 3 Axle Vehicles - 4+ Axle Trucks

	La Sierra Avenue Southbound					SR-91 Westbound Off Ramp Westbound					La Sierra Avenue Northbound					SR-91 Westbound On Ramp Eastbound							
Start Time	Left	Thru	Right	RTOR	App. Total	Left	Thru	Right	RTOR	App. Total	Left	Thru	Right	RTOR	App. Total	Left	Thru	Right	RTOR	App. Total	Exclu. Total	Inclu. Total	Int. Total
04:00 PM	0	282	56	8	338	127	0	125	60	252	104	209	0	0	313	0	0	0	0	0	68	903	971
04:15 PM	0	251	34	11	285	129	2	125	58	256	90	210	0	0	300	0	0	0	0	0	69	841	910
04:30 PM	0	276	55	14	331	109	1	102	61	212	86	200	0	0	286	0	0	0	0	0	75	829	904
04:45 PM	0	276	48	12	324	126	1	127	68	254	93	186	0	0	279	0	0	0	0	0	80	857	937
Total	0	1085	193	45	1278	491	4	479	247	974	373	805	0	0	1178	0	0	0	0	0	292	3430	3722
05:00 PM	0	330	63	12	393	128	1	117	64	246	107	198	0	0	305	0	0	0	0	0	76	944	1020
05:15 PM	0	342	59	4	401	134	1	126	71	261	101	214	0	0	315	0	0	0	0	0	75	977	1052
05:30 PM	0	305	57	10	362	108	1	106	55	215	94	209	0	0	303	0	0	0	0	0	65	880	945
05:45 PM	0	267	41	11	308	102	0	130	69	232	75	192	0	0	267	0	0	0	0	0	80	807	887
Total	0	1244	220	37	1464	472	3	479	259	954	377	813	0	0	1190	0	0	0	0	0	296	3608	3904
Grand Total	0	2329	413	82	2742	963	7	958	506	1928	750	1618	0	0	2368	0	0	0	0	0	588	7038	7626
Apprch %	0	84.9	15.1			49.9	0.4	49.7			31.7	68.3	0			0	0	0					
Total %	0	33.1	5.9		39	13.7	0.1	13.6		27.4	10.7	23	0		33.6	0	0	0		0	7.7	92.3	
Passenger Vehicles	0	2294	411		2787	953	6	951		2414	729	1590	0		2319	0	0	0		0	0	0	7520
% Passenger Vehicles	0	98.5	99.5	100	98.7	99	85.7	99.3	99.6	99.2	97.2	98.3	0	0	97.9	0	0	0	0	0	0	0	98.6
Large 2 Axle Vehicles	0	29	2		31	6	1	4		13	17	22	0		39	0	0	0		0	0	0	83
% Large 2 Axle Vehicles	0	1.2	0.5	0	1.1	0.6	14.3	0.4	0.4	0.5	2.3	1.4	0	0	1.6	0	0	0	0	0	0	0	1.1
3 Axle Vehicles	0	4	0		4	3	0	1		4	3	3	0		6	0	0	0		0	0	0	14
% 3 Axle Vehicles	0	0.2	0	0	0.1	0.3	0	0.1	0	0.2	0.4	0.2	0	0	0.3	0	0	0	0	0	0	0	0.2
4+ Axle Trucks	0	2	0		2	1	0	2		3	1	3	0		4	0	0	0		0	0	0	9
% 4+ Axle Trucks	0	0.1	0	0	0.1	0.1	0	0.2	0	0.1	0.1	0.2	0	0	0.2	0	0	0	0	0	0	0	0.1

	La Sierra Avenue Southbound				SR-91 Westbound Off Ramp Westbound				La Sierra Avenue Northbound				SR-91 Westbound On Ramp Eastbound				
Start Time	Left	Thru	Right	App. Total	Left	Thru	Right	App. Total	Left	Thru	Right	App. Total	Left	Thru	Right	App. Total	Int. Total
Peak Hour Analysis From 04:00 PM to 05:45 PM - Peak 1 of 1																	
Peak Hour for Entire Intersection Begins at 04:45 PM																	
04:45 PM	0	276	48	324	126	**1**	**127**	254	93	186	0	279	0	0	0	0	857
05:00 PM	0	330	**63**	393	128	1	117	246	**107**	198	0	305	0	0	0	0	944
05:15 PM	0	**342**	59	**401**	**134**	1	126	**261**	101	**214**	0	**315**	0	0	0	0	**977**
05:30 PM	0	305	57	362	108	1	106	215	94	209	0	303	0	0	0	0	880
Total Volume	0	1253	227	1480	496	4	476	976	395	807	0	1202	0	0	0	0	3658
% App. Total	0	84.7	15.3		50.8	0.4	48.8		32.9	67.1	0		0	0	0		
PHF	.000	.916	.901	.923	.925	1.00	.937	.935	.923	.943	.000	.954	.000	.000	.000	.000	.936

Counts Unlimited, Inc.
PO Box 1178
Corona, CA 92878
(951) 268-6268

City of Riverside
N/S: La Sierra Avenue
E/W: SR-91 Westbound Ramps
Weather: Clear

File Name : 01_RIV_La S_91W PM
Site Code : 05123396
Start Date : 8/17/2023
Page No : 2

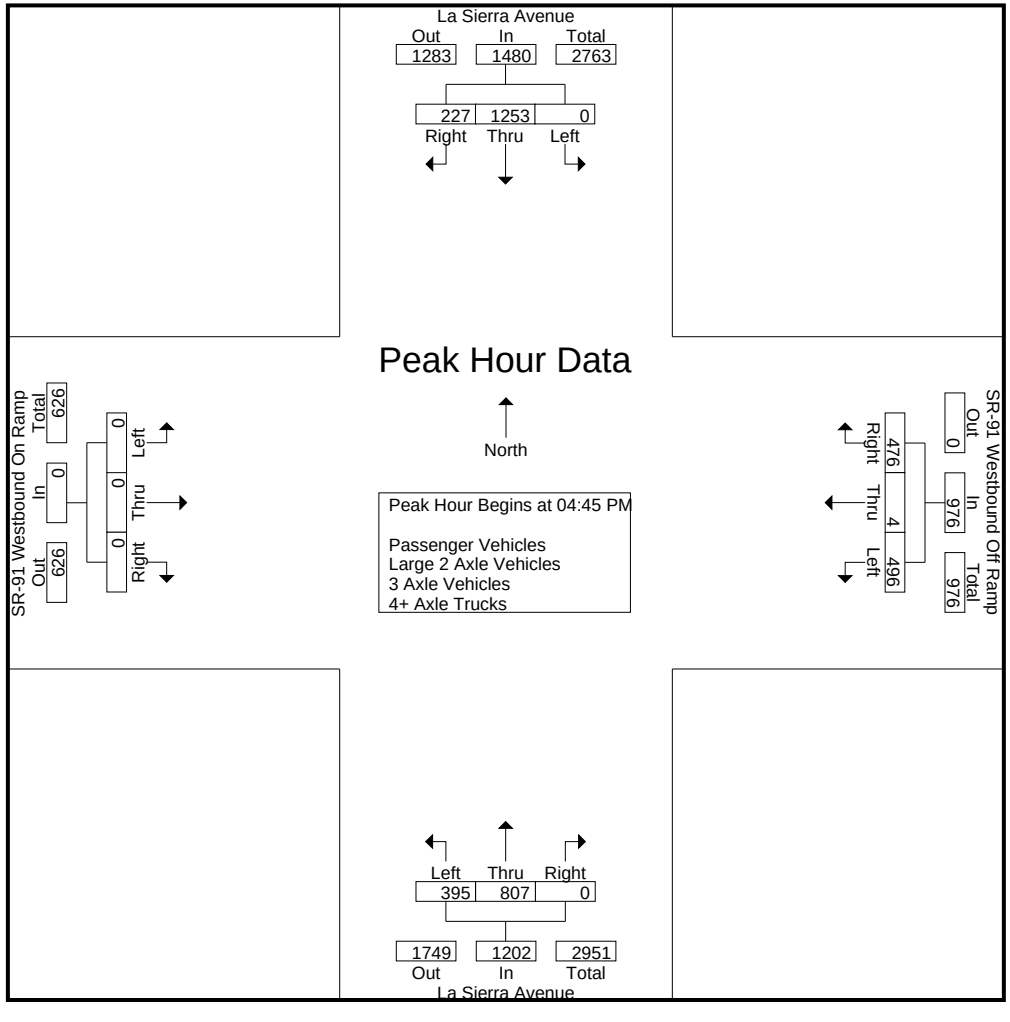

Counts Unlimited, Inc.
PO Box 1178
Corona, CA 92878
(951) 268-6268

City of Riverside
N/S: La Sierra Avenue
E/W: SR-91 Westbound Ramps
Weather: Clear

File Name : 01_RIV_La S_91W PM
Site Code : 05123396
Start Date : 8/17/2023

	La Sierra Avenue Southbound				SR-91 Westbound Off Ramp Westbound				La Sierra Avenue Northbound				SR-91 Westbound On Ramp Eastbound				
Start Time	Left	Thru	Right	App. Total	Left	Thru	Right	App. Total	Left	Thru	Right	App. Total	Left	Thru	Right	App. Total	Int. Total
Peak Hour Analysis From 04:00 PM to 05:45 PM - Peak 1 of 1																	
Peak Hour for Each Approach Begins at:																	
	04:45 PM				04:45 PM				04:45 PM				04:00 PM				
+0 mins.	0	276	48	324	126	**1**	**127**	254	93	186	0	279	0	0	0	0	
+15 mins.	0	330	**63**	393	128	1	117	246	**107**	198	0	305	0	0	0	0	
+30 mins.	0	**342**	59	**401**	**134**	1	126	**261**	101	**214**	0	**315**	0	0	0	0	
+45 mins.	0	305	57	362	108	1	106	215	94	209	0	303	0	0	0	0	
Total Volume	0	1253	227	1480	496	4	476	976	395	807	0	1202	0	0	0	0	
% App. Total	0	84.7	15.3		50.8	0.4	48.8		32.9	67.1	0		0	0	0		
PHF	.000	.916	.901	.923	.925	1.000	.937	.935	.923	.943	.000	.954	.000	.000	.000	.000	

Counts Unlimited, Inc.
PO Box 1178
Corona, CA 92878
(951) 268-6268

City of Riverside
N/S: La Sierra Avenue
E/W: SR-91 Westbound Ramps
Weather: Clear

File Name : 01_RIV_La S_91W PM
Site Code : 05123396
Start Date : 8/17/2023
Page No : 1

Groups Printed- Passenger Vehicles

	La Sierra Avenue Southbound					SR-91 Westbound Off Ramp Westbound					La Sierra Avenue Northbound					SR-91 Westbound On Ramp Eastbound							
Start Time	Left	Thru	Right	RTOR	App. Total	Left	Thru	Right	RTOR	App. Total	Left	Thru	Right	RTOR	App. Total	Left	Thru	Right	RTOR	App. Total	Exclu. Total	Inclu. Total	Int. Total
04:00 PM	0	273	56	8	329	124	0	124	60	248	101	205	0	0	306	0	0	0	0	0	68	883	951
04:15 PM	0	244	34	11	278	128	2	124	57	254	87	201	0	0	288	0	0	0	0	0	68	820	888
04:30 PM	0	272	55	14	327	108	1	101	61	210	83	195	0	0	278	0	0	0	0	0	75	815	890
04:45 PM	0	273	48	12	321	126	0	126	68	252	91	185	0	0	276	0	0	0	0	0	80	849	929
Total	0	1062	193	45	1255	486	3	475	246	964	362	786	0	0	1148	0	0	0	0	0	291	3367	3658
05:00 PM	0	325	62	12	387	127	1	116	64	244	104	196	0	0	300	0	0	0	0	0	76	931	1007
05:15 PM	0	337	59	4	396	133	1	125	71	259	96	214	0	0	310	0	0	0	0	0	75	965	1040
05:30 PM	0	304	57	10	361	106	1	106	55	213	93	207	0	0	300	0	0	0	0	0	65	874	939
05:45 PM	0	266	40	11	306	101	0	129	68	230	74	187	0	0	261	0	0	0	0	0	79	797	876
Total	0	1232	218	37	1450	467	3	476	258	946	367	804	0	0	1171	0	0	0	0	0	295	3567	3862
Grand Total	0	2294	411	82	2705	953	6	951	504	1910	729	1590	0	0	2319	0	0	0	0	0	586	6934	7520
Apprch %	0	84.8	15.2			49.9	0.3	49.8			31.4	68.6	0			0	0	0					
Total %	0	33.1	5.9		39	13.7	0.1	13.7		27.5	10.5	22.9	0		33.4	0	0	0		0	7.8	92.2	

	La Sierra Avenue Southbound				SR-91 Westbound Off Ramp Westbound				La Sierra Avenue Northbound				SR-91 Westbound On Ramp Eastbound				
Start Time	Left	Thru	Right	App. Total	Left	Thru	Right	App. Total	Left	Thru	Right	App. Total	Left	Thru	Right	App. Total	Int. Total
Peak Hour Analysis From 04:45 PM to 05:30 PM - Peak 1 of 1																	
Peak Hour for Entire Intersection Begins at 04:45 PM																	
04:45 PM	0	273	48	321	126	0	**126**	252	91	185	0	276	0	0	0	0	849
05:00 PM	0	325	**62**	387	127	**1**	116	244	**104**	196	0	300	0	0	0	0	931
05:15 PM	0	**337**	59	**396**	**133**	1	125	**259**	96	**214**	0	**310**	0	0	0	0	**965**
05:30 PM	0	304	57	361	106	1	106	213	93	207	0	300	0	0	0	0	874
Total Volume	0	1239	226	1465	492	3	473	968	384	802	0	1186	0	0	0	0	3619
% App. Total	0	84.6	15.4		50.8	0.3	48.9		32.4	67.6	0		0	0	0		
PHF	.000	.919	.911	.925	.925	.750	.938	.934	.923	.937	.000	.956	.000	.000	.000	.000	.938

Counts Unlimited, Inc.
PO Box 1178
Corona, CA 92878
(951) 268-6268

City of Riverside
N/S: La Sierra Avenue
E/W: SR-91 Westbound Ramps
Weather: Clear

File Name : 01_RIV_La S_91W PM
Site Code : 05123396
Start Date : 8/17/2023
Page No : 2

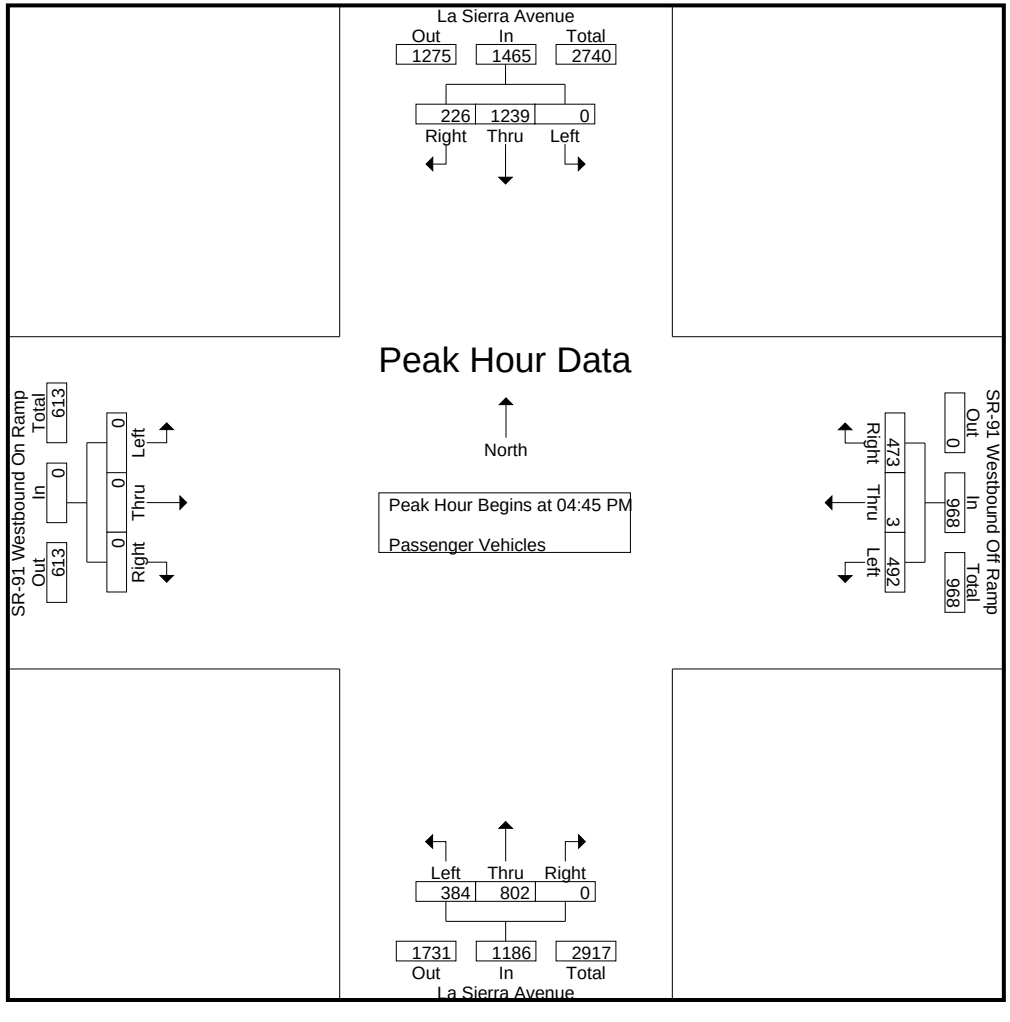

Counts Unlimited, Inc.
PO Box 1178
Corona, CA 92878
(951) 268-6268

City of Riverside
N/S: La Sierra Avenue
E/W: SR-91 Westbound Ramps
Weather: Clear

File Name : 01_RIV_La S_91W PM
Site Code : 05123396
Start Date : 8/17/2023

	La Sierra Avenue Southbound				SR-91 Westbound Off Ramp Westbound				La Sierra Avenue Northbound				SR-91 Westbound On Ramp Eastbound				
Start Time	Left	Thru	Right	App. Total	Left	Thru	Right	App. Total	Left	Thru	Right	App. Total	Left	Thru	Right	App. Total	Int. Total
Peak Hour Analysis From 04:45 PM to 05:30 PM - Peak 1 of 1																	
Peak Hour for Each Approach Begins at:																	
	04:45 PM				04:45 PM				04:45 PM				04:45 PM				
+0 mins.	0	273	48	321	126	0	**126**	252	91	185	0	276	0	0	0	0	
+15 mins.	0	325	**62**	387	127	**1**	116	244	**104**	196	0	300	0	0	0	0	
+30 mins.	0	**337**	59	**396**	**133**	1	125	**259**	96	**214**	0	**310**	0	0	0	0	
+45 mins.	0	304	57	361	106	1	106	213	93	207	0	300	0	0	0	0	
Total Volume	0	1239	226	1465	492	3	473	968	384	802	0	1186	0	0	0	0	
% App. Total	0	84.6	15.4		50.8	0.3	48.9		32.4	67.6	0		0	0	0		
PHF	.000	.919	.911	.925	.925	.750	.938	.934	.923	.937	.000	.956	.000	.000	.000	.000	

Counts Unlimited, Inc.
PO Box 1178
Corona, CA 92878
(951) 268-6268

City of Riverside
N/S: La Sierra Avenue
E/W: SR-91 Westbound Ramps
Weather: Clear

File Name : 01_RIV_La S_91W PM
Site Code : 05123396
Start Date : 8/17/2023
Page No : 1

Groups Printed- Large 2 Axle Vehicles

	La Sierra Avenue Southbound					SR-91 Westbound Off Ramp Westbound					La Sierra Avenue Northbound					SR-91 Westbound On Ramp Eastbound							
Start Time	Left	Thru	Right	RTOR	App. Total	Left	Thru	Right	RTOR	App. Total	Left	Thru	Right	RTOR	App. Total	Left	Thru	Right	RTOR	App. Total	Exclu. Total	Inclu. Total	Int. Total
04:00 PM	0	7	0	0	7	3	0	0	0	3	2	3	0	0	5	0	0	0	0	0	0	15	15
04:15 PM	0	7	0	0	7	1	0	1	1	2	3	7	0	0	10	0	0	0	0	0	1	19	20
04:30 PM	0	3	0	0	3	0	0	1	0	1	2	4	0	0	6	0	0	0	0	0	0	10	10
04:45 PM	0	3	0	0	3	0	1	0	0	1	2	0	0	0	2	0	0	0	0	0	0	6	6
Total	0	20	0	0	20	4	1	2	1	7	9	14	0	0	23	0	0	0	0	0	1	50	51
05:00 PM	0	2	1	0	3	0	0	0	0	0	3	2	0	0	5	0	0	0	0	0	0	8	8
05:15 PM	0	5	0	0	5	0	0	1	0	1	3	0	0	0	3	0	0	0	0	0	0	9	9
05:30 PM	0	1	0	0	1	1	0	0	0	1	1	1	0	0	2	0	0	0	0	0	0	4	4
05:45 PM	0	1	1	0	2	1	0	1	1	2	1	5	0	0	6	0	0	0	0	0	1	10	11
Total	0	9	2	0	11	2	0	2	1	4	8	8	0	0	16	0	0	0	0	0	1	31	32
Grand Total	0	29	2	0	31	6	1	4	2	11	17	22	0	0	39	0	0	0	0	0	2	81	83
Apprch %	0	93.5	6.5			54.5	9.1	36.4			43.6	56.4	0			0	0	0					
Total %	0	35.8	2.5		38.3	7.4	1.2	4.9		13.6	21	27.2	0		48.1	0	0	0		0	2.4	97.6	

	La Sierra Avenue Southbound				SR-91 Westbound Off Ramp Westbound				La Sierra Avenue Northbound				SR-91 Westbound On Ramp Eastbound				
Start Time	Left	Thru	Right	App. Total	Left	Thru	Right	App. Total	Left	Thru	Right	App. Total	Left	Thru	Right	App. Total	Int. Total
Peak Hour Analysis From 04:45 PM to 05:30 PM - Peak 1 of 1																	
Peak Hour for Entire Intersection Begins at 04:45 PM																	
04:45 PM	0	3	0	3	0	**1**	0	**1**	2	0	0	2	0	0	0	0	6
05:00 PM	0	2	**1**	3	0	0	0	0	**3**	**2**	0	**5**	0	0	0	0	8
05:15 PM	0	**5**	0	**5**	0	0	**1**	1	3	0	0	3	0	0	0	0	**9**
05:30 PM	0	1	0	1	**1**	0	0	1	1	1	0	2	0	0	0	0	4
Total Volume	0	11	1	12	1	1	1	3	9	3	0	12	0	0	0	0	27
% App. Total	0	91.7	8.3		33.3	33.3	33.3		75	25	0		0	0	0		
PHF	.000	.550	.250	.600	.250	.250	.250	.750	.750	.375	.000	.600	.000	.000	.000	.000	.750

Counts Unlimited, Inc.
PO Box 1178
Corona, CA 92878
(951) 268-6268

City of Riverside
N/S: La Sierra Avenue
E/W: SR-91 Westbound Ramps
Weather: Clear

File Name : 01_RIV_La S_91W PM
Site Code : 05123396
Start Date : 8/17/2023
Page No : 2

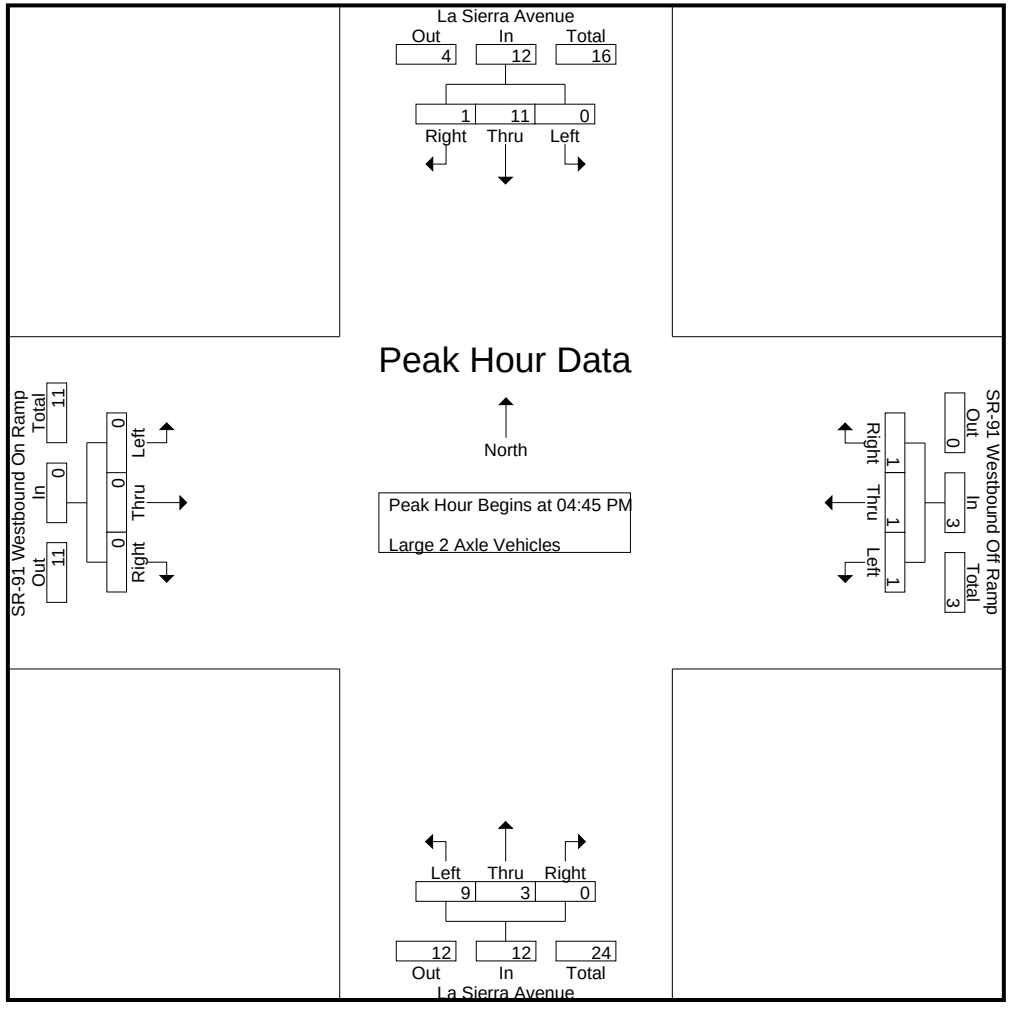

Counts Unlimited, Inc.
PO Box 1178
Corona, CA 92878
(951) 268-6268

City of Riverside
N/S: La Sierra Avenue
E/W: SR-91 Westbound Ramps
Weather: Clear

File Name : 01_RIV_La S_91W PM
Site Code : 05123396
Start Date : 8/17/2023
Page No : 3

	La Sierra Avenue Southbound				SR-91 Westbound Off Ramp Westbound				La Sierra Avenue Northbound				SR-91 Westbound On Ramp Eastbound				
Start Time	Left	Thru	Right	App. Total	Left	Thru	Right	App. Total	Left	Thru	Right	App. Total	Left	Thru	Right	App. Total	Int. Total
Peak Hour Analysis From 04:45 PM to 05:30 PM - Peak 1 of 1																	
Peak Hour for Each Approach Begins at:																	
	04:45 PM				04:45 PM				04:45 PM				04:45 PM				
+0 mins.	0	3	0	3	0	**1**	0	**1**	2	0	0	2	0	0	0	0	
+15 mins.	0	2	**1**	3	0	0	0	0	**3**	**2**	0	**5**	0	0	0	0	
+30 mins.	0	**5**	0	**5**	0	0	**1**	1	3	0	0	3	0	0	0	0	
+45 mins.	0	1	0	1	**1**	0	0	1	1	1	0	2	0	0	0	0	
Total Volume	0	11	1	12	1	1	1	3	9	3	0	12	0	0	0	0	
% App. Total	0	91.7	8.3		33.3	33.3	33.3		75	25	0		0	0	0		
PHF	.000	.550	.250	.600	.250	.250	.250	.750	.750	.375	.000	.600	.000	.000	.000	.000	

Counts Unlimited, Inc.
PO Box 1178
Corona, CA 92878
(951) 268-6268

City of Riverside
N/S: La Sierra Avenue
E/W: SR-91 Westbound Ramps
Weather: Clear

File Name : 01_RIV_La S_91W PM
Site Code : 05123396
Start Date : 8/17/2023
Page No : 1

Groups Printed- 3 Axle Vehicles

	La Sierra Avenue Southbound					SR-91 Westbound Off Ramp Westbound					La Sierra Avenue Northbound					SR-91 Westbound On Ramp Eastbound							
Start Time	Left	Thru	Right	RTOR	App. Total	Left	Thru	Right	RTOR	App. Total	Left	Thru	Right	RTOR	App. Total	Left	Thru	Right	RTOR	App. Total	Exclu. Total	Inclu. Total	Int. Total
04:00 PM	0	1	0	0	1	0	0	0	0	0	1	1	0	0	2	0	0	0	0	0	0	3	3
04:15 PM	0	0	0	0	0	0	0	0	0	0	0	1	0	0	1	0	0	0	0	0	0	1	1
04:30 PM	0	0	0	0	0	1	0	0	0	1	0	1	0	0	1	0	0	0	0	0	0	2	2
04:45 PM	0	0	0	0	0	0	0	0	0	0	0	0	0	0	0	0	0	0	0	0	0	0	0
Total	0	1	0	0	1	1	0	0	0	1	1	3	0	0	4	0	0	0	0	0	0	6	6
05:00 PM	0	3	0	0	3	1	0	1	0	2	0	0	0	0	0	0	0	0	0	0	0	5	5
05:15 PM	0	0	0	0	0	0	0	0	0	0	2	0	0	0	2	0	0	0	0	0	0	2	2
05:30 PM	0	0	0	0	0	1	0	0	0	1	0	0	0	0	0	0	0	0	0	0	0	1	1
05:45 PM	0	0	0	0	0	0	0	0	0	0	0	0	0	0	0	0	0	0	0	0	0	0	0
Total	0	3	0	0	3	2	0	1	0	3	2	0	0	0	2	0	0	0	0	0	0	8	8
Grand Total	0	4	0	0	4	3	0	1	0	4	3	3	0	0	6	0	0	0	0	0	0	14	14
Apprch %	0	100	0			75	0	25			50	50	0			0	0	0					
Total %	0	28.6	0		28.6	21.4	0	7.1		28.6	21.4	21.4	0		42.9	0	0	0		0	0	100	

	La Sierra Avenue Southbound				SR-91 Westbound Off Ramp Westbound				La Sierra Avenue Northbound				SR-91 Westbound On Ramp Eastbound				
Start Time	Left	Thru	Right	App. Total	Left	Thru	Right	App. Total	Left	Thru	Right	App. Total	Left	Thru	Right	App. Total	Int. Total
Peak Hour Analysis From 04:45 PM to 05:30 PM - Peak 1 of 1																	
Peak Hour for Entire Intersection Begins at 04:45 PM																	
04:45 PM	0	0	0	0	0	0	0	0	0	0	0	0	0	0	0	0	0
05:00 PM	0	**3**	0	**3**	**1**	0	**1**	**2**	0	0	0	0	0	0	0	0	**5**
05:15 PM	0	0	0	0	0	0	0	0	**2**	0	0	**2**	0	0	0	0	2
05:30 PM	0	0	0	0	1	0	0	1	0	0	0	0	0	0	0	0	1
Total Volume	0	3	0	3	2	0	1	3	2	0	0	2	0	0	0	0	8
% App. Total	0	100	0		66.7	0	33.3		100	0	0		0	0	0		
PHF	.000	.250	.000	.250	.500	.000	.250	.375	.250	.000	.000	.250	.000	.000	.000	.000	.400

Counts Unlimited, Inc.
PO Box 1178
Corona, CA 92878
(951) 268-6268

City of Riverside
N/S: La Sierra Avenue
E/W: SR-91 Westbound Ramps
Weather: Clear

File Name : 01_RIV_La S_91W PM
Site Code : 05123396
Start Date : 8/17/2023

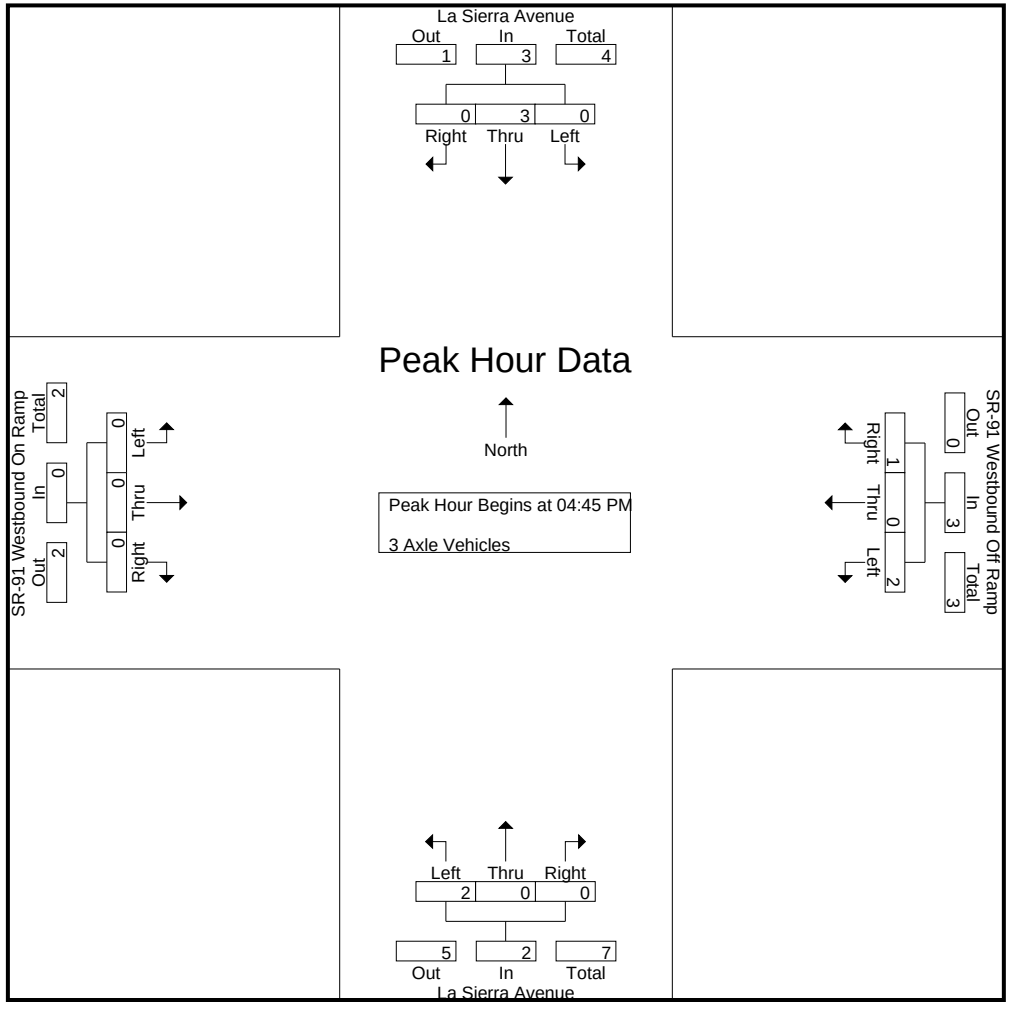

Counts Unlimited, Inc.
PO Box 1178
Corona, CA 92878
(951) 268-6268

City of Riverside
N/S: La Sierra Avenue
E/W: SR-91 Westbound Ramps
Weather: Clear

File Name : 01_RIV_La S_91W PM
Site Code : 05123396
Start Date : 8/17/2023

	La Sierra Avenue Southbound				SR-91 Westbound Off Ramp Westbound				La Sierra Avenue Northbound				SR-91 Westbound On Ramp Eastbound				
Start Time	Left	Thru	Right	App. Total	Left	Thru	Right	App. Total	Left	Thru	Right	App. Total	Left	Thru	Right	App. Total	Int. Total
Peak Hour Analysis From 04:45 PM to 05:30 PM - Peak 1 of 1																	
Peak Hour for Each Approach Begins at:																	
	04:45 PM				04:45 PM				04:45 PM				04:45 PM				
+0 mins.	0	0	0	0	0	0	0	0	0	0	0	0	0	0	0	0	
+15 mins.	0	**3**	0	**3**	**1**	0	**1**	**2**	0	0	0	0	0	0	0	0	
+30 mins.	0	0	0	0	0	0	0	0	**2**	0	0	**2**	0	0	0	0	
+45 mins.	0	0	0	0	1	0	0	1	0	0	0	0	0	0	0	0	
Total Volume	0	3	0	3	2	0	1	3	2	0	0	2	0	0	0	0	
% App. Total	0	100	0		66.7	0	33.3		100	0	0		0	0	0		
PHF	.000	.250	.000	.250	.500	.000	.250	.375	.250	.000	.000	.250	.000	.000	.000	.000	

Counts Unlimited, Inc.
PO Box 1178
Corona, CA 92878
(951) 268-6268

City of Riverside
N/S: La Sierra Avenue
E/W: SR-91 Westbound Ramps
Weather: Clear

File Name : 01_RIV_La S_91W PM
Site Code : 05123396
Start Date : 8/17/2023
Page No : 1

Groups Printed- 4+ Axle Trucks

	La Sierra Avenue Southbound					SR-91 Westbound Off Ramp Westbound					La Sierra Avenue Northbound					SR-91 Westbound On Ramp Eastbound							
Start Time	Left	Thru	Right	RTOR	App. Total	Left	Thru	Right	RTOR	App. Total	Left	Thru	Right	RTOR	App. Total	Left	Thru	Right	RTOR	App. Total	Exclu. Total	Inclu. Total	Int. Total
04:00 PM	0	1	0	0	1	0	0	1	0	1	0	0	0	0	0	0	0	0	0	0	0	2	2
04:15 PM	0	0	0	0	0	0	0	0	0	0	0	1	0	0	1	0	0	0	0	0	0	1	1
04:30 PM	0	1	0	0	1	0	0	0	0	0	1	0	0	0	1	0	0	0	0	0	0	2	2
04:45 PM	0	0	0	0	0	0	0	1	0	1	0	1	0	0	1	0	0	0	0	0	0	2	2
Total	0	2	0	0	2	0	0	2	0	2	1	2	0	0	3	0	0	0	0	0	0	7	7
05:00 PM	0	0	0	0	0	0	0	0	0	0	0	0	0	0	0	0	0	0	0	0	0	0	0
05:15 PM	0	0	0	0	0	1	0	0	0	1	0	0	0	0	0	0	0	0	0	0	0	1	1
05:30 PM	0	0	0	0	0	0	0	0	0	0	0	1	0	0	1	0	0	0	0	0	0	1	1
05:45 PM	0	0	0	0	0	0	0	0	0	0	0	0	0	0	0	0	0	0	0	0	0	0	0
Total	0	0	0	0	0	1	0	0	0	1	0	1	0	0	1	0	0	0	0	0	0	2	2
Grand Total	0	2	0	0	2	1	0	2	0	3	1	3	0	0	4	0	0	0	0	0	0	9	9
Apprch %	0	100	0			33.3	0	66.7			25	75	0			0	0	0					
Total %	0	22.2	0		22.2	11.1	0	22.2		33.3	11.1	33.3	0		44.4	0	0	0		0	0	100	

	La Sierra Avenue Southbound				SR-91 Westbound Off Ramp Westbound				La Sierra Avenue Northbound				SR-91 Westbound On Ramp Eastbound				
Start Time	Left	Thru	Right	App. Total	Left	Thru	Right	App. Total	Left	Thru	Right	App. Total	Left	Thru	Right	App. Total	Int. Total
Peak Hour Analysis From 04:45 PM to 05:30 PM - Peak 1 of 1																	
Peak Hour for Entire Intersection Begins at 04:45 PM																	
04:45 PM	0	0	0	0	0	0	**1**	**1**	0	**1**	0	**1**	0	0	0	0	**2**
05:00 PM	0	0	0	0	0	0	0	0	0	0	0	0	0	0	0	0	0
05:15 PM	0	0	0	0	**1**	0	0	1	0	0	0	0	0	0	0	0	1
05:30 PM	0	0	0	0	0	0	0	0	0	1	0	1	0	0	0	0	1
Total Volume	0	0	0	0	1	0	1	2	0	2	0	2	0	0	0	0	4
% App. Total	0	0	0		50	0	50		0	100	0		0	0	0		
PHF	.000	.000	.000	.000	.250	.000	.250	.500	.000	.500	.000	.500	.000	.000	.000	.000	.500

Counts Unlimited, Inc.
PO Box 1178
Corona, CA 92878
(951) 268-6268

City of Riverside
N/S: La Sierra Avenue
E/W: SR-91 Westbound Ramps
Weather: Clear

File Name : 01_RIV_La S_91W PM
Site Code : 05123396
Start Date : 8/17/2023
Page No : 2

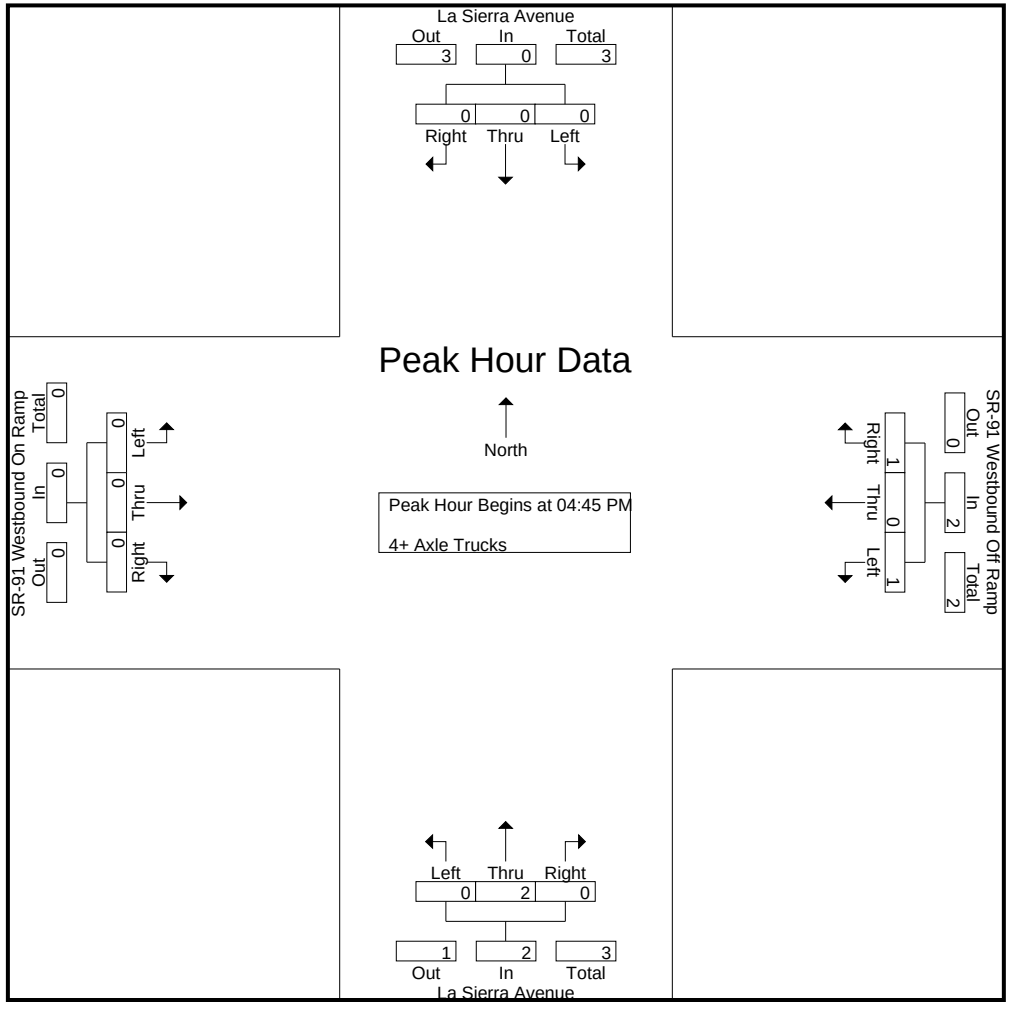

Counts Unlimited, Inc.
PO Box 1178
Corona, CA 92878
(951) 268-6268

City of Riverside
N/S: La Sierra Avenue
E/W: SR-91 Westbound Ramps
Weather: Clear

File Name : 01_RIV_La S_91W PM
Site Code : 05123396
Start Date : 8/17/2023

	La Sierra Avenue Southbound				SR-91 Westbound Off Ramp Westbound				La Sierra Avenue Northbound				SR-91 Westbound On Ramp Eastbound				
Start Time	Left	Thru	Right	App. Total	Left	Thru	Right	App. Total	Left	Thru	Right	App. Total	Left	Thru	Right	App. Total	Int. Total
Peak Hour Analysis From 04:45 PM to 05:30 PM - Peak 1 of 1																	
Peak Hour for Each Approach Begins at:																	
	04:45 PM				04:45 PM				04:45 PM				04:45 PM				
+0 mins.	0	0	0	0	0	0	**1**	**1**	0	**1**	0	**1**	0	0	0	0	
+15 mins.	0	0	0	0	0	0	0	0	0	0	0	0	0	0	0	0	
+30 mins.	0	0	0	0	**1**	0	0	1	0	0	0	0	0	0	0	0	
+45 mins.	0	0	0	0	0	0	0	0	0	1	0	1	0	0	0	0	
Total Volume	0	0	0	0	1	0	1	2	0	2	0	2	0	0	0	0	
% App. Total	0	0	0		50	0	50		0	100	0		0	0	0		
PHF	.000	.000	.000	.000	.250	.000	.250	.500	.000	.500	.000	.500	.000	.000	.000	.000	

Location: Riverside
N/S: La Sierra Avenue
E/W: SR-91 WB Ramps

Date: 8/17/2023
Day: Thursday

PEDESTRIANS

	North Leg La Sierra Avenue	East Leg SR-91 WB Ramps	South Leg La Sierra Avenue	West Leg SR-91 WB Ramps	
	Pedestrians	Pedestrians	Pedestrians	Pedestrians	
7:00 AM	0	4	0	1	5
7:15 AM	0	1	0	2	3
7:30 AM	0	0	0	0	0
7:45 AM	0	2	0	1	3
8:00 AM	0	0	0	2	2
8:15 AM	0	1	0	0	1
8:30 AM	0	0	0	2	2
8:45 AM	0	1	0	1	2
TOTAL VOLUMES:	0	9	0	9	18

	North Leg La Sierra Avenue	East Leg SR-91 WB Ramps	South Leg La Sierra Avenue	West Leg SR-91 WB Ramps	
	Pedestrians	Pedestrians	Pedestrians	Pedestrians	
4:00 PM	0	3	0	2	5
4:15 PM	0	2	0	2	4
4:30 PM	0	0	0	1	1
4:45 PM	0	0	0	2	2
5:00 PM	0	1	0	1	2
5:15 PM	0	0	0	2	2
5:30 PM	0	0	0	1	1
5:45 PM	0	0	0	1	1
TOTAL VOLUMES:	0	6	0	12	18

Counts Unlimited, Inc.
PO Box 1178
Corona, CA 92878
951-268-6268

Location: Riverside
N/S: La Sierra Avenue
E/W: SR-91 WB Ramps

Date: 8/17/2023
Day: Thursday

BICYCLES

	Southbound La Sierra Avenue			Westbound SR-91 WB Ramps			Northbound La Sierra Avenue			Eastbound SR-91 WB Ramps			
	Left	Thru	Right	Left	Thru	Right	Left	Thru	Right	Left	Thru	Right	
7:00 AM	0	0	0	0	0	0	0	0	0	0	0	0	0
7:15 AM	0	0	0	0	0	0	0	0	0	0	0	0	0
7:30 AM	0	3	0	0	0	0	0	1	0	0	0	0	4
7:45 AM	0	1	0	0	0	0	0	0	0	0	0	0	1
8:00 AM	0	1	0	0	0	0	0	0	0	0	0	0	1
8:15 AM	0	0	0	0	0	0	0	1	0	0	0	0	1
8:30 AM	0	0	0	0	0	0	0	1	0	0	0	0	1
8:45 AM	0	0	0	0	0	0	0	1	0	0	0	0	1
TOTAL VOLUMES:	0	5	0	0	0	0	0	4	0	0	0	0	9

	Southbound La Sierra Avenue			Westbound SR-91 WB Ramps			Northbound La Sierra Avenue			Eastbound SR-91 WB Ramps			
	Left	Thru	Right	Left	Thru	Right	Left	Thru	Right	Left	Thru	Right	
4:00 PM	0	0	0	0	0	0	0	0	0	0	0	0	0
4:15 PM	0	0	0	0	0	0	0	1	0	0	0	0	1
4:30 PM	0	0	0	0	0	0	0	1	0	0	0	0	1
4:45 PM	0	1	0	0	0	0	0	0	0	0	0	0	1
5:00 PM	0	0	0	0	0	0	0	2	0	0	0	0	2
5:15 PM	0	2	0	0	0	0	0	0	0	0	0	0	2
5:30 PM	0	0	0	0	0	0	0	0	0	0	0	0	0
5:45 PM	0	1	0	0	0	0	0	1	0	0	0	0	2
TOTAL VOLUMES:	0	4	0	0	0	0	0	5	0	0	0	0	9

Counts Unlimited, Inc.
PO Box 1178
Corona, CA 92878
951-268-6268

Counts Unlimited, Inc.
PO Box 1178
Corona, CA 92878
(951) 268-6268

City of Riverside
N/S: La Sierra Avenue
E/W: SR-91 Eastbound Ramps
Weather: Clear

File Name : 02_RIV_La S_91E AM
Site Code : 05123396
Start Date : 8/17/2023
Page No : 1

Groups Printed- Passenger Vehicles - Large 2 Axle Vehicles - 3 Axle Vehicles - 4+ Axle Trucks

	La Sierra Avenue Southbound					SR-91 Eastbound On Ramp Westbound					La Sierra Avenue Northbound					SR-91 Eastbound Off Ramp Eastbound							
Start Time	Left	Thru	Right	RTOR	App. Total	Left	Thru	Right	RTOR	App. Total	Left	Thru	Right	RTOR	App. Total	Left	Thru	Right	RTOR	App. Total	Exclu. Total	Inclu. Total	Int. Total
07:00 AM	88	121	0	0	209	0	0	0	0	0	0	247	119	31	366	60	0	72	53	132	84	707	791
07:15 AM	106	151	0	0	257	0	0	0	0	0	0	299	112	45	411	74	0	66	45	140	90	808	898
07:30 AM	91	213	0	0	304	0	0	0	0	0	0	289	95	33	384	73	1	77	46	151	79	839	918
07:45 AM	67	274	0	0	341	0	0	0	0	0	0	359	89	37	448	98	2	101	60	201	97	990	1087
Total	352	759	0	0	1111	0	0	0	0	0	0	1194	415	146	1609	305	3	316	204	624	350	3344	3694
08:00 AM	86	214	0	0	300	0	0	0	0	0	0	442	93	37	535	107	5	81	54	193	91	1028	1119
08:15 AM	86	163	0	0	249	0	0	0	0	0	0	392	109	40	501	95	1	71	47	167	87	917	1004
08:30 AM	63	132	0	0	195	0	0	0	0	0	0	303	108	43	411	84	0	84	57	168	100	774	874
08:45 AM	74	111	0	0	185	0	0	0	0	0	0	306	99	28	405	73	1	65	43	139	71	729	800
Total	309	620	0	0	929	0	0	0	0	0	0	1443	409	148	1852	359	7	301	201	667	349	3448	3797
Grand Total	661	1379	0	0	2040	0	0	0	0	0	0	2637	824	294	3461	664	10	617	405	1291	699	6792	7491
Apprch %	32.4	67.6	0			0	0	0			0	76.2	23.8			51.4	0.8	47.8					
Total %	9.7	20.3	0		30	0	0	0		0	0	38.8	12.1		51	9.8	0.1	9.1		19	9.3	90.7	
Passenger Vehicles	644	1348	0		1992	0	0	0		0	0	2570	810		3673	645	8	560		1586	0	0	7251
% Passenger Vehicles	97.4	97.8	0	0	97.6	0	0	0	0	0	0	97.5	98.3	99.7	97.8	97.1	80	90.8	92.1	93.5	0	0	96.8
Large 2 Axle Vehicles	5	25	0		30	0	0	0		0	0	52	9		62	11	1	25		50	0	0	142
% Large 2 Axle Vehicles	0.8	1.8	0	0	1.5	0	0	0	0	0	0	2	1.1	0.3	1.7	1.7	10	4.1	3.2	2.9	0	0	1.9
3 Axle Vehicles	6	5	0		11	0	0	0		0	0	8	3		11	3	1	23		40	0	0	62
% 3 Axle Vehicles	0.9	0.4	0	0	0.5	0	0	0	0	0	0	0.3	0.4	0	0.3	0.5	10	3.7	3.2	2.4	0	0	0.8
4+ Axle Trucks	6	1	0		7	0	0	0		0	0	7	2		9	5	0	9		20	0	0	36
% 4+ Axle Trucks	0.9	0.1	0	0	0.3	0	0	0	0	0	0	0.3	0.2	0	0.2	0.8	0	1.5	1.5	1.2	0	0	0.5

	La Sierra Avenue Southbound				SR-91 Eastbound On Ramp Westbound				La Sierra Avenue Northbound				SR-91 Eastbound Off Ramp Eastbound				
Start Time	Left	Thru	Right	App. Total	Left	Thru	Right	App. Total	Left	Thru	Right	App. Total	Left	Thru	Right	App. Total	Int. Total
Peak Hour Analysis From 07:00 AM to 08:45 AM - Peak 1 of 1																	
Peak Hour for Entire Intersection Begins at 07:30 AM																	
07:30 AM	**91**	213	0	304	0	0	0	0	0	289	95	384	73	1	77	151	839
07:45 AM	67	**274**	0	**341**	0	0	0	0	0	359	89	448	98	2	**101**	**201**	990
08:00 AM	86	214	0	300	0	0	0	0	0	**442**	93	**535**	**107**	**5**	81	193	**1028**
08:15 AM	86	163	0	249	0	0	0	0	0	392	**109**	501	95	1	71	167	917
Total Volume	330	864	0	1194	0	0	0	0	0	1482	386	1868	373	9	330	712	3774
% App. Total	27.6	72.4	0		0	0	0		0	79.3	20.7		52.4	1.3	46.3		
PHF	.907	.788	.000	.875	.000	.000	.000	.000	.000	.838	.885	.873	.871	.450	.817	.886	.918

Counts Unlimited, Inc.
PO Box 1178
Corona, CA 92878
(951) 268-6268

City of Riverside
N/S: La Sierra Avenue
E/W: SR-91 Eastbound Ramps
Weather: Clear

File Name : 02_RIV_La S_91E AM
Site Code : 05123396
Start Date : 8/17/2023
Page No : 2

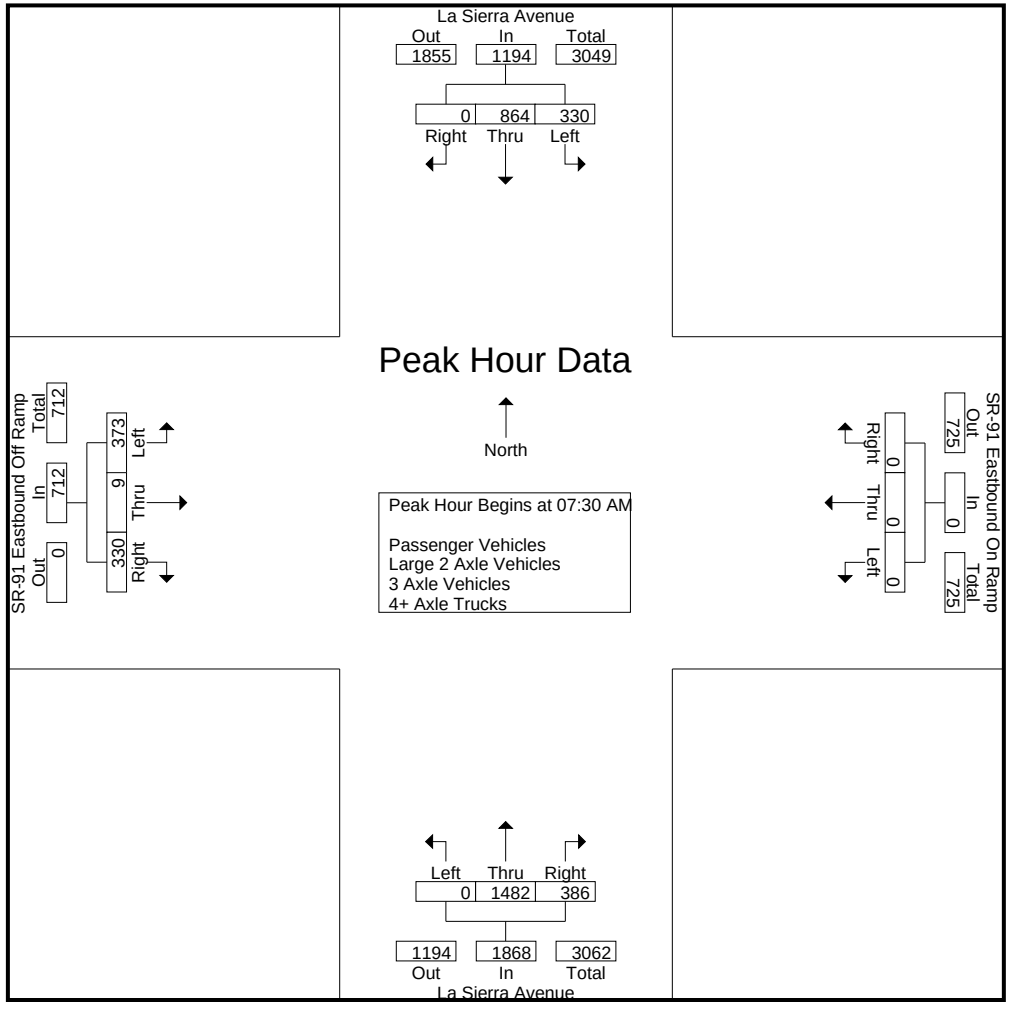

Counts Unlimited, Inc.
PO Box 1178
Corona, CA 92878
(951) 268-6268

City of Riverside
N/S: La Sierra Avenue
E/W: SR-91 Eastbound Ramps
Weather: Clear

File Name : 02_RIV_La S_91E AM
Site Code : 05123396
Start Date : 8/17/2023
Page No : 3

	La Sierra Avenue Southbound				SR-91 Eastbound On Ramp Westbound				La Sierra Avenue Northbound				SR-91 Eastbound Off Ramp Eastbound				
Start Time	Left	Thru	Right	App. Total	Left	Thru	Right	App. Total	Left	Thru	Right	App. Total	Left	Thru	Right	App. Total	Int. Total
Peak Hour Analysis From 07:00 AM to 08:45 AM - Peak 1 of 1																	
Peak Hour for Each Approach Begins at:																	
	07:15 AM				07:00 AM				07:45 AM				07:45 AM				
+0 mins.	**106**	151	0	257	0	0	0	0	0	359	89	448	98	2	**101**	**201**	
+15 mins.	91	213	0	304	0	0	0	0	0	**442**	93	**535**	**107**	**5**	81	193	
+30 mins.	67	**274**	0	**341**	0	0	0	0	0	392	**109**	501	95	1	71	167	
+45 mins.	86	214	0	300	0	0	0	0	0	303	108	411	84	0	84	168	
Total Volume	350	852	0	1202	0	0	0	0	0	1496	399	1895	384	8	337	729	
% App. Total	29.1	70.9	0		0	0	0		0	78.9	21.1		52.7	1.1	46.2		
PHF	.825	.777	.000	.881	.000	.000	.000	.000	.000	.846	.915	.886	.897	.400	.834	.907	

Counts Unlimited, Inc.
PO Box 1178
Corona, CA 92878
(951) 268-6268

City of Riverside
N/S: La Sierra Avenue
E/W: SR-91 Eastbound Ramps
Weather: Clear

File Name : 02_RIV_La S_91E AM
Site Code : 05123396
Start Date : 8/17/2023
Page No : 1

Groups Printed- Passenger Vehicles

	La Sierra Avenue Southbound					SR-91 Eastbound On Ramp Westbound					La Sierra Avenue Northbound					SR-91 Eastbound Off Ramp Eastbound							
Start Time	Left	Thru	Right	RTOR	App. Total	Left	Thru	Right	RTOR	App. Total	Left	Thru	Right	RTOR	App. Total	Left	Thru	Right	RTOR	App. Total	Exclu. Total	Inclu. Total	Int. Total
07:00 AM	86	113	0	0	199	0	0	0	0	0	0	236	116	30	352	58	0	65	48	123	78	674	752
07:15 AM	103	147	0	0	250	0	0	0	0	0	0	295	112	45	407	72	0	61	41	133	86	790	876
07:30 AM	89	210	0	0	299	0	0	0	0	0	0	280	94	33	374	71	1	67	40	139	73	812	885
07:45 AM	63	270	0	0	333	0	0	0	0	0	0	349	87	37	436	95	2	93	57	190	94	959	1053
Total	341	740	0	0	1081	0	0	0	0	0	0	1160	409	145	1569	296	3	286	186	585	331	3235	3566
08:00 AM	83	211	0	0	294	0	0	0	0	0	0	435	92	37	527	106	4	74	52	184	89	1005	1094
08:15 AM	86	156	0	0	242	0	0	0	0	0	0	379	109	40	488	93	0	65	44	158	84	888	972
08:30 AM	62	131	0	0	193	0	0	0	0	0	0	294	105	43	399	80	0	77	51	157	94	749	843
08:45 AM	72	110	0	0	182	0	0	0	0	0	0	302	95	28	397	70	1	58	40	129	68	708	776
Total	303	608	0	0	911	0	0	0	0	0	0	1410	401	148	1811	349	5	274	187	628	335	3350	3685
Grand Total	644	1348	0	0	1992	0	0	0	0	0	0	2570	810	293	3380	645	8	560	373	1213	666	6585	7251
Apprch %	32.3	67.7	0			0	0	0			0	76	24			53.2	0.7	46.2					
Total %	9.8	20.5	0		30.3	0	0	0		0	0	39	12.3		51.3	9.8	0.1	8.5		18.4	9.2	90.8	

	La Sierra Avenue Southbound				SR-91 Eastbound On Ramp Westbound				La Sierra Avenue Northbound				SR-91 Eastbound Off Ramp Eastbound				
Start Time	Left	Thru	Right	App. Total	Left	Thru	Right	App. Total	Left	Thru	Right	App. Total	Left	Thru	Right	App. Total	Int. Total
Peak Hour Analysis From 07:30 AM to 08:15 AM - Peak 1 of 1																	
Peak Hour for Entire Intersection Begins at 07:30 AM																	
07:30 AM	**89**	210	0	299	0	0	0	0	0	280	94	374	71	1	67	139	812
07:45 AM	63	**270**	0	**333**	0	0	0	0	0	349	87	436	95	2	**93**	**190**	959
08:00 AM	83	211	0	294	0	0	0	0	0	**435**	92	**527**	**106**	**4**	74	184	**1005**
08:15 AM	86	156	0	242	0	0	0	0	0	379	**109**	488	93	0	65	158	888
Total Volume	321	847	0	1168	0	0	0	0	0	1443	382	1825	365	7	299	671	3664
% App. Total	27.5	72.5	0		0	0	0		0	79.1	20.9		54.4	1	44.6		
PHF	.902	.784	.000	.877	.000	.000	.000	.000	.000	.829	.876	.866	.861	.438	.804	.883	.911

Counts Unlimited, Inc.
PO Box 1178
Corona, CA 92878
(951) 268-6268

City of Riverside
N/S: La Sierra Avenue
E/W: SR-91 Eastbound Ramps
Weather: Clear

File Name : 02_RIV_La S_91E AM
Site Code : 05123396
Start Date : 8/17/2023
Page No : 2

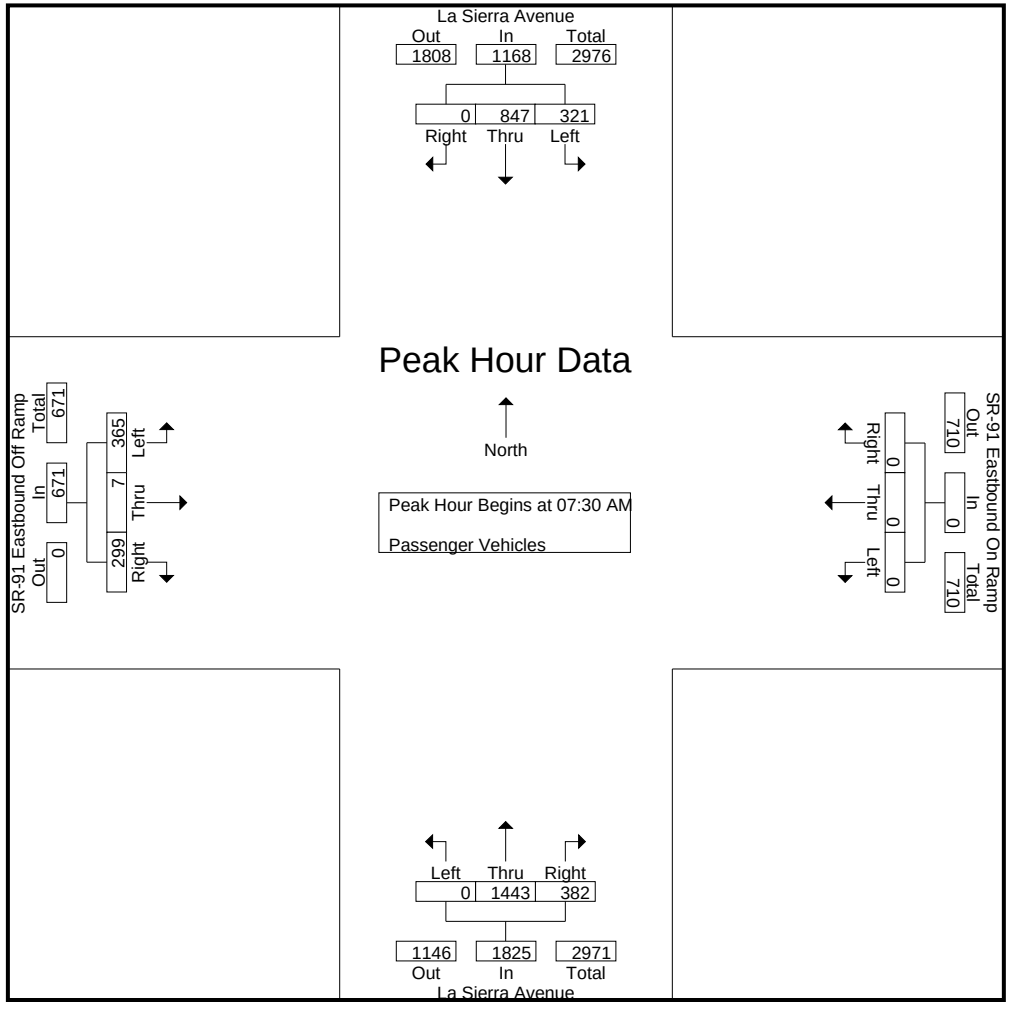

Counts Unlimited, Inc.
PO Box 1178
Corona, CA 92878
(951) 268-6268

City of Riverside
N/S: La Sierra Avenue
E/W: SR-91 Eastbound Ramps
Weather: Clear

File Name : 02_RIV_La S_91E AM
Site Code : 05123396
Start Date : 8/17/2023
Page No : 3

	La Sierra Avenue Southbound				SR-91 Eastbound On Ramp Westbound				La Sierra Avenue Northbound				SR-91 Eastbound Off Ramp Eastbound				
Start Time	Left	Thru	Right	App. Total	Left	Thru	Right	App. Total	Left	Thru	Right	App. Total	Left	Thru	Right	App. Total	Int. Total
Peak Hour Analysis From 07:30 AM to 08:15 AM - Peak 1 of 1																	
Peak Hour for Each Approach Begins at:																	
	07:30 AM				07:30 AM				07:30 AM				07:30 AM				
+0 mins.	**89**	210	0	299	0	0	0	0	0	280	94	374	71	1	67	139	
+15 mins.	63	**270**	0	**333**	0	0	0	0	0	349	87	436	95	2	**93**	**190**	
+30 mins.	83	211	0	294	0	0	0	0	0	**435**	92	**527**	**106**	**4**	74	184	
+45 mins.	86	156	0	242	0	0	0	0	0	379	**109**	488	93	0	65	158	
Total Volume	321	847	0	1168	0	0	0	0	0	1443	382	1825	365	7	299	671	
% App. Total	27.5	72.5	0		0	0	0		0	79.1	20.9		54.4	1	44.6		
PHF	.902	.784	.000	.877	.000	.000	.000	.000	.000	.829	.876	.866	.861	.438	.804	.883	

Counts Unlimited, Inc.
PO Box 1178
Corona, CA 92878
(951) 268-6268

City of Riverside
N/S: La Sierra Avenue
E/W: SR-91 Eastbound Ramps
Weather: Clear

File Name : 02_RIV_La S_91E AM
Site Code : 05123396
Start Date : 8/17/2023
Page No : 1

Groups Printed- Large 2 Axle Vehicles

	La Sierra Avenue Southbound					SR-91 Eastbound On Ramp Westbound					La Sierra Avenue Northbound					SR-91 Eastbound Off Ramp Eastbound							
Start Time	Left	Thru	Right	RTOR	App. Total	Left	Thru	Right	RTOR	App. Total	Left	Thru	Right	RTOR	App. Total	Left	Thru	Right	RTOR	App. Total	Exclu. Total	Inclu. Total	Int. Total
07:00 AM	1	7	0	0	8	0	0	0	0	0	0	7	3	1	10	2	0	3	2	5	3	23	26
07:15 AM	1	3	0	0	4	0	0	0	0	0	0	3	0	0	3	0	0	2	2	2	2	9	11
07:30 AM	1	2	0	0	3	0	0	0	0	0	0	9	1	0	10	2	0	4	1	6	1	19	20
07:45 AM	1	4	0	0	5	0	0	0	0	0	0	7	1	0	8	1	0	2	0	3	0	16	16
Total	4	16	0	0	20	0	0	0	0	0	0	26	5	1	31	5	0	11	5	16	6	67	73
08:00 AM	0	2	0	0	2	0	0	0	0	0	0	7	0	0	7	0	1	3	1	4	1	13	14
08:15 AM	0	6	0	0	6	0	0	0	0	0	0	11	0	0	11	1	0	1	0	2	0	19	19
08:30 AM	0	0	0	0	0	0	0	0	0	0	0	8	1	0	9	2	0	5	5	7	5	16	21
08:45 AM	1	1	0	0	2	0	0	0	0	0	0	0	3	0	3	3	0	5	2	8	2	13	15
Total	1	9	0	0	10	0	0	0	0	0	0	26	4	0	30	6	1	14	8	21	8	61	69
Grand Total	5	25	0	0	30	0	0	0	0	0	0	52	9	1	61	11	1	25	13	37	14	128	142
Apprch %	16.7	83.3	0			0	0	0			0	85.2	14.8			29.7	2.7	67.6					
Total %	3.9	19.5	0		23.4	0	0	0		0	0	40.6	7		47.7	8.6	0.8	19.5		28.9	9.9	90.1	

	La Sierra Avenue Southbound				SR-91 Eastbound On Ramp Westbound				La Sierra Avenue Northbound				SR-91 Eastbound Off Ramp Eastbound				
Start Time	Left	Thru	Right	App. Total	Left	Thru	Right	App. Total	Left	Thru	Right	App. Total	Left	Thru	Right	App. Total	Int. Total
Peak Hour Analysis From 07:30 AM to 08:15 AM - Peak 1 of 1																	
Peak Hour for Entire Intersection Begins at 07:30 AM																	
07:30 AM	**1**	2	0	3	0	0	0	0	0	9	**1**	10	**2**	0	**4**	**6**	**19**
07:45 AM	1	4	0	5	0	0	0	0	0	7	1	8	1	0	2	3	16
08:00 AM	0	2	0	2	0	0	0	0	0	7	0	7	0	**1**	3	4	13
08:15 AM	0	**6**	0	**6**	0	0	0	0	0	**11**	0	**11**	1	0	1	2	19
Total Volume	2	14	0	16	0	0	0	0	0	34	2	36	4	1	10	15	67
% App. Total	12.5	87.5	0		0	0	0		0	94.4	5.6		26.7	6.7	66.7		
PHF	.500	.583	.000	.667	.000	.000	.000	.000	.000	.773	.500	.818	.500	.250	.625	.625	.882

Counts Unlimited, Inc.
PO Box 1178
Corona, CA 92878
(951) 268-6268

City of Riverside
N/S: La Sierra Avenue
E/W: SR-91 Eastbound Ramps
Weather: Clear

File Name : 02_RIV_La S_91E AM
Site Code : 05123396
Start Date : 8/17/2023
Page No : 2

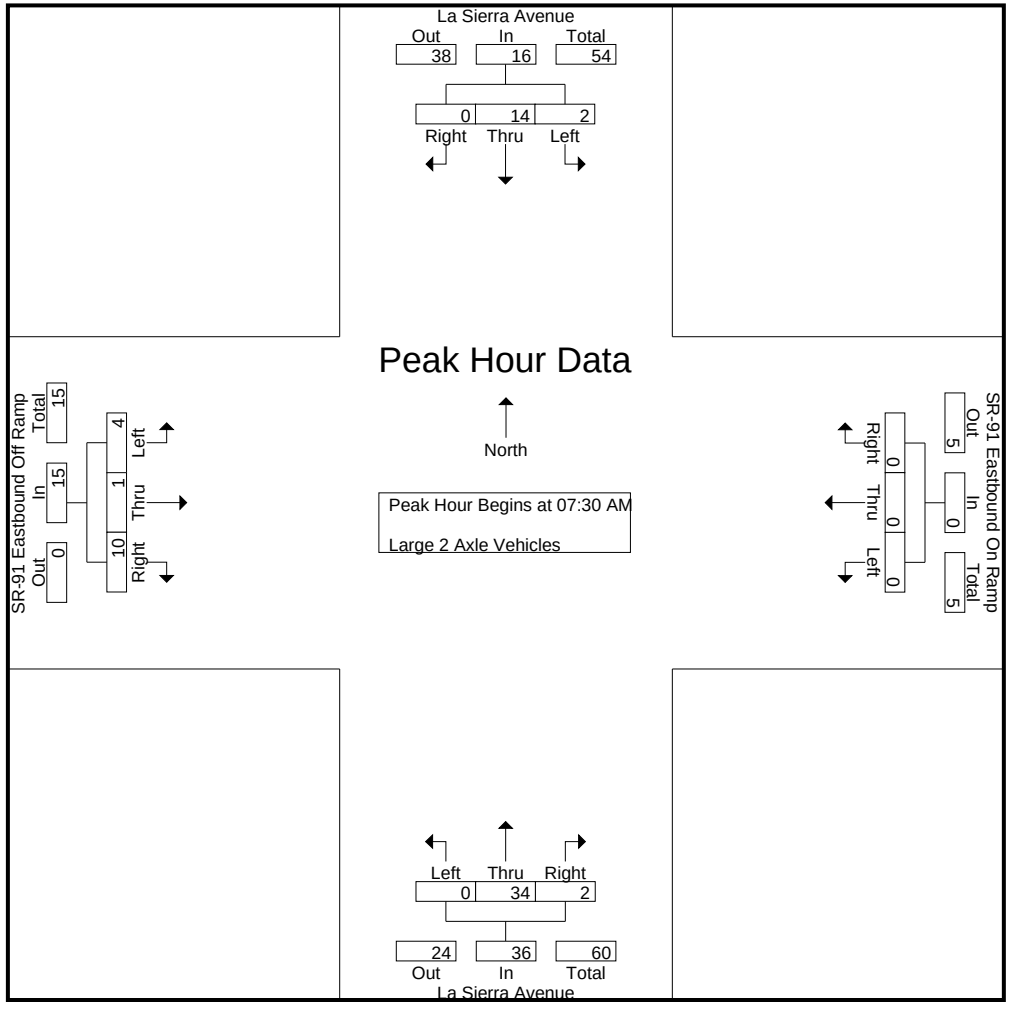

Counts Unlimited, Inc.
PO Box 1178
Corona, CA 92878
(951) 268-6268

City of Riverside
N/S: La Sierra Avenue
E/W: SR-91 Eastbound Ramps
Weather: Clear

File Name : 02_RIV_La S_91E AM
Site Code : 05123396
Start Date : 8/17/2023
Page No : 3

	La Sierra Avenue Southbound				SR-91 Eastbound On Ramp Westbound				La Sierra Avenue Northbound				SR-91 Eastbound Off Ramp Eastbound				
Start Time	Left	Thru	Right	App. Total	Left	Thru	Right	App. Total	Left	Thru	Right	App. Total	Left	Thru	Right	App. Total	Int. Total
Peak Hour Analysis From 07:30 AM to 08:15 AM - Peak 1 of 1																	
Peak Hour for Each Approach Begins at:																	
	07:30 AM				07:30 AM				07:30 AM				07:30 AM				
+0 mins.	**1**	2	0	3	0	0	0	0	0	9	**1**	10	**2**	0	**4**	**6**	
+15 mins.	1	4	0	5	0	0	0	0	0	7	1	8	1	0	2	3	
+30 mins.	0	2	0	2	0	0	0	0	0	7	0	7	0	**1**	3	4	
+45 mins.	0	**6**	0	**6**	0	0	0	0	0	**11**	0	**11**	1	0	1	2	
Total Volume	2	14	0	16	0	0	0	0	0	34	2	36	4	1	10	15	
% App. Total	12.5	87.5	0		0	0	0		0	94.4	5.6		26.7	6.7	66.7		
PHF	.500	.583	.000	.667	.000	.000	.000	.000	.000	.773	.500	.818	.500	.250	.625	.625	

Counts Unlimited, Inc.
PO Box 1178
Corona, CA 92878
(951) 268-6268

City of Riverside
N/S: La Sierra Avenue
E/W: SR-91 Eastbound Ramps
Weather: Clear

File Name : 02_RIV_La S_91E AM
Site Code : 05123396
Start Date : 8/17/2023
Page No : 1

Groups Printed- 3 Axle Vehicles

	La Sierra Avenue Southbound					SR-91 Eastbound On Ramp Westbound					La Sierra Avenue Northbound					SR-91 Eastbound Off Ramp Eastbound							
Start Time	Left	Thru	Right	RTOR	App. Total	Left	Thru	Right	RTOR	App. Total	Left	Thru	Right	RTOR	App. Total	Left	Thru	Right	RTOR	App. Total	Exclu. Total	Inclu. Total	Int. Total
07:00 AM	1	0	0	0	1	0	0	0	0	0	0	3	0	0	3	0	0	1	1	1	1	5	6
07:15 AM	1	1	0	0	2	0	0	0	0	0	0	0	0	0	0	1	0	2	1	3	1	5	6
07:30 AM	0	1	0	0	1	0	0	0	0	0	0	0	0	0	0	0	0	5	4	5	4	6	10
07:45 AM	1	0	0	0	1	0	0	0	0	0	0	1	0	0	1	0	0	4	2	4	2	6	8
Total	3	2	0	0	5	0	0	0	0	0	0	4	0	0	4	1	0	12	8	13	8	22	30
08:00 AM	2	1	0	0	3	0	0	0	0	0	0	0	1	0	1	0	0	4	1	4	1	8	9
08:15 AM	0	1	0	0	1	0	0	0	0	0	0	0	0	0	0	1	1	5	3	7	3	8	11
08:30 AM	0	1	0	0	1	0	0	0	0	0	0	0	1	0	1	1	0	2	1	3	1	5	6
08:45 AM	1	0	0	0	1	0	0	0	0	0	0	4	1	0	5	0	0	0	0	0	0	6	6
Total	3	3	0	0	6	0	0	0	0	0	0	4	3	0	7	2	1	11	5	14	5	27	32
Grand Total	6	5	0	0	11	0	0	0	0	0	0	8	3	0	11	3	1	23	13	27	13	49	62
Apprch %	54.5	45.5	0			0	0	0			0	72.7	27.3			11.1	3.7	85.2					
Total %	12.2	10.2	0		22.4	0	0	0		0	0	16.3	6.1		22.4	6.1	2	46.9		55.1	21	79	

	La Sierra Avenue Southbound				SR-91 Eastbound On Ramp Westbound				La Sierra Avenue Northbound				SR-91 Eastbound Off Ramp Eastbound				
Start Time	Left	Thru	Right	App. Total	Left	Thru	Right	App. Total	Left	Thru	Right	App. Total	Left	Thru	Right	App. Total	Int. Total
Peak Hour Analysis From 07:30 AM to 08:15 AM - Peak 1 of 1																	
Peak Hour for Entire Intersection Begins at 07:30 AM																	
07:30 AM	0	**1**	0	1	0	0	0	0	0	0	0	0	0	0	**5**	5	6
07:45 AM	1	0	0	1	0	0	0	0	0	**1**	0	**1**	0	0	4	4	6
08:00 AM	**2**	1	0	**3**	0	0	0	0	0	0	**1**	1	0	0	4	4	**8**
08:15 AM	0	1	0	1	0	0	0	0	0	0	0	0	**1**	**1**	5	**7**	8
Total Volume	3	3	0	6	0	0	0	0	0	1	1	2	1	1	18	20	28
% App. Total	50	50	0		0	0	0		0	50	50		5	5	90		
PHF	.375	.750	.000	.500	.000	.000	.000	.000	.000	.250	.250	.500	.250	.250	.900	.714	.875

Counts Unlimited, Inc.
PO Box 1178
Corona, CA 92878
(951) 268-6268

City of Riverside
N/S: La Sierra Avenue
E/W: SR-91 Eastbound Ramps
Weather: Clear

File Name : 02_RIV_La S_91E AM
Site Code : 05123396
Start Date : 8/17/2023
Page No : 2

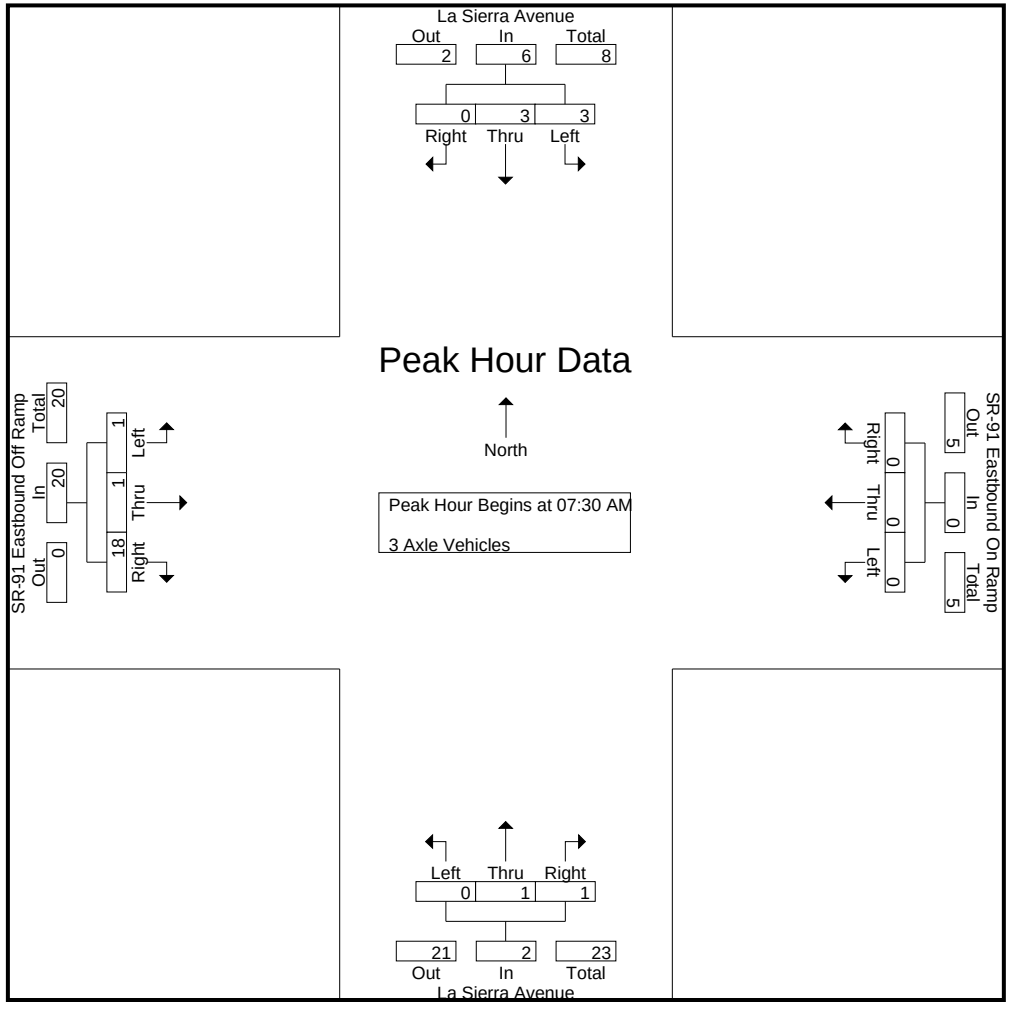

Counts Unlimited, Inc.
PO Box 1178
Corona, CA 92878
(951) 268-6268

City of Riverside
N/S: La Sierra Avenue
E/W: SR-91 Eastbound Ramps
Weather: Clear

File Name : 02_RIV_La S_91E AM
Site Code : 05123396
Start Date : 8/17/2023

	La Sierra Avenue Southbound				SR-91 Eastbound On Ramp Westbound				La Sierra Avenue Northbound				SR-91 Eastbound Off Ramp Eastbound				
Start Time	Left	Thru	Right	App. Total	Left	Thru	Right	App. Total	Left	Thru	Right	App. Total	Left	Thru	Right	App. Total	Int. Total
Peak Hour Analysis From 07:30 AM to 08:15 AM - Peak 1 of 1																	
Peak Hour for Each Approach Begins at:																	
	07:30 AM				07:30 AM				07:30 AM				07:30 AM				
+0 mins.	0	**1**	0	1	0	0	0	0	0	0	0	0	0	0	**5**	5	
+15 mins.	1	0	0	1	0	0	0	0	0	**1**	0	**1**	0	0	4	4	
+30 mins.	**2**	1	0	**3**	0	0	0	0	0	0	**1**	1	0	0	4	4	
+45 mins.	0	1	0	1	0	0	0	0	0	0	0	0	**1**	**1**	5	**7**	
Total Volume	3	3	0	6	0	0	0	0	0	1	1	2	1	1	18	20	
% App. Total	50	50	0		0	0	0		0	50	50		5	5	90		
PHF	.375	.750	.000	.500	.000	.000	.000	.000	.000	.250	.250	.500	.250	.250	.900	.714	

Counts Unlimited, Inc.
PO Box 1178
Corona, CA 92878
(951) 268-6268

City of Riverside
N/S: La Sierra Avenue
E/W: SR-91 Eastbound Ramps
Weather: Clear

File Name : 02_RIV_La S_91E AM
Site Code : 05123396
Start Date : 8/17/2023
Page No : 1

Groups Printed- 4+ Axle Trucks

	La Sierra Avenue Southbound					SR-91 Eastbound On Ramp Westbound					La Sierra Avenue Northbound					SR-91 Eastbound Off Ramp Eastbound							
Start Time	Left	Thru	Right	RTOR	App. Total	Left	Thru	Right	RTOR	App. Total	Left	Thru	Right	RTOR	App. Total	Left	Thru	Right	RTOR	App. Total	Exclu. Total	Inclu. Total	Int. Total
07:00 AM	0	1	0	0	1	0	0	0	0	0	0	1	0	0	1	0	0	3	2	3	2	5	7
07:15 AM	1	0	0	0	1	0	0	0	0	0	0	1	0	0	1	1	0	1	1	2	1	4	5
07:30 AM	1	0	0	0	1	0	0	0	0	0	0	0	0	0	0	0	0	1	1	1	1	2	3
07:45 AM	2	0	0	0	2	0	0	0	0	0	0	2	1	0	3	2	0	2	1	4	1	9	10
Total	4	1	0	0	5	0	0	0	0	0	0	4	1	0	5	3	0	7	5	10	5	20	25
08:00 AM	1	0	0	0	1	0	0	0	0	0	0	0	0	0	0	1	0	0	0	1	0	2	2
08:15 AM	0	0	0	0	0	0	0	0	0	0	0	2	0	0	2	0	0	0	0	0	0	2	2
08:30 AM	1	0	0	0	1	0	0	0	0	0	0	1	1	0	2	1	0	0	0	1	0	4	4
08:45 AM	0	0	0	0	0	0	0	0	0	0	0	0	0	0	0	0	0	2	1	2	1	2	3
Total	2	0	0	0	2	0	0	0	0	0	0	3	1	0	4	2	0	2	1	4	1	10	11
Grand Total	6	1	0	0	7	0	0	0	0	0	0	7	2	0	9	5	0	9	6	14	6	30	36
Apprch %	85.7	14.3	0			0	0	0			0	77.8	22.2			35.7	0	64.3					
Total %	20	3.3	0		23.3	0	0	0		0	0	23.3	6.7		30	16.7	0	30		46.7	16.7	83.3	

	La Sierra Avenue Southbound				SR-91 Eastbound On Ramp Westbound				La Sierra Avenue Northbound				SR-91 Eastbound Off Ramp Eastbound				
Start Time	Left	Thru	Right	App. Total	Left	Thru	Right	App. Total	Left	Thru	Right	App. Total	Left	Thru	Right	App. Total	Int. Total
Peak Hour Analysis From 07:30 AM to 08:15 AM - Peak 1 of 1																	
Peak Hour for Entire Intersection Begins at 07:30 AM																	
07:30 AM	1	0	0	1	0	0	0	0	0	0	0	0	0	0	1	1	2
07:45 AM	**2**	0	0	**2**	0	0	0	0	0	**2**	**1**	**3**	**2**	0	**2**	**4**	**9**
08:00 AM	1	0	0	1	0	0	0	0	0	0	0	0	1	0	0	1	2
08:15 AM	0	0	0	0	0	0	0	0	0	2	0	2	0	0	0	0	2
Total Volume	4	0	0	4	0	0	0	0	0	4	1	5	3	0	3	6	15
% App. Total	100	0	0		0	0	0		0	80	20		50	0	50		
PHF	.500	.000	.000	.500	.000	.000	.000	.000	.000	.500	.250	.417	.375	.000	.375	.375	.417

Counts Unlimited, Inc.
PO Box 1178
Corona, CA 92878
(951) 268-6268

City of Riverside
N/S: La Sierra Avenue
E/W: SR-91 Eastbound Ramps
Weather: Clear

File Name : 02_RIV_La S_91E AM
Site Code : 05123396
Start Date : 8/17/2023
Page No : 2

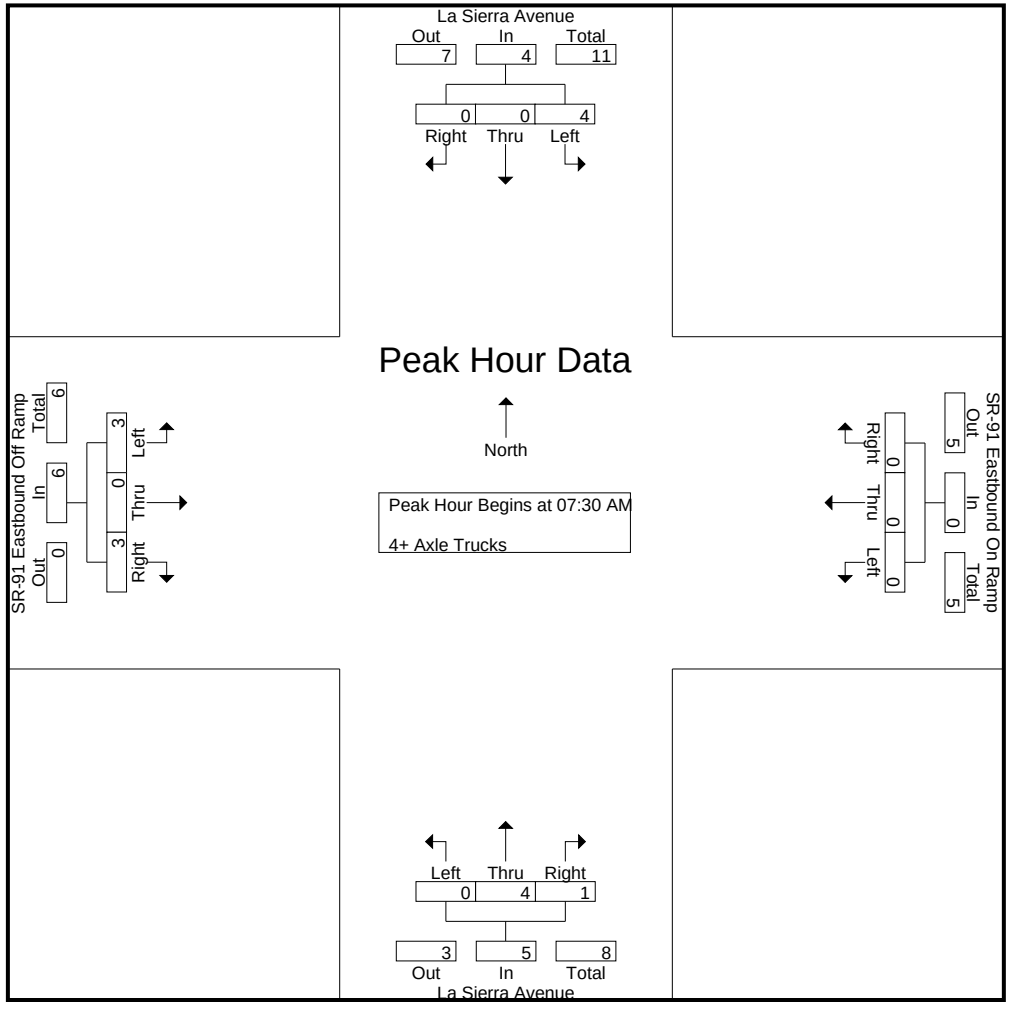

Counts Unlimited, Inc.
PO Box 1178
Corona, CA 92878
(951) 268-6268

City of Riverside
N/S: La Sierra Avenue
E/W: SR-91 Eastbound Ramps
Weather: Clear

File Name : 02_RIV_La S_91E AM
Site Code : 05123396
Start Date : 8/17/2023
Page No : 3

	La Sierra Avenue Southbound				SR-91 Eastbound On Ramp Westbound				La Sierra Avenue Northbound				SR-91 Eastbound Off Ramp Eastbound				
Start Time	Left	Thru	Right	App. Total	Left	Thru	Right	App. Total	Left	Thru	Right	App. Total	Left	Thru	Right	App. Total	Int. Total
Peak Hour Analysis From 07:30 AM to 08:15 AM - Peak 1 of 1																	
Peak Hour for Each Approach Begins at:																	
	07:30 AM				07:30 AM				07:30 AM				07:30 AM				
+0 mins.	1	0	0	1	0	0	0	0	0	0	0	0	0	0	1	1	
+15 mins.	**2**	0	0	**2**	0	0	0	0	0	**2**	**1**	**3**	**2**	0	**2**	**4**	
+30 mins.	1	0	0	1	0	0	0	0	0	0	0	0	1	0	0	1	
+45 mins.	0	0	0	0	0	0	0	0	0	2	0	2	0	0	0	0	
Total Volume	4	0	0	4	0	0	0	0	0	4	1	5	3	0	3	6	
% App. Total	100	0	0		0	0	0		0	80	20		50	0	50		
PHF	.500	.000	.000	.500	.000	.000	.000	.000	.000	.500	.250	.417	.375	.000	.375	.375	

Counts Unlimited, Inc.
PO Box 1178
Corona, CA 92878
(951) 268-6268

City of Riverside
N/S: La Sierra Avenue
E/W: SR-91 Eastbound Ramps
Weather: Clear

File Name : 02_RIV_La S_91E PM
Site Code : 05123396
Start Date : 8/17/2023
Page No : 1

Groups Printed- Passenger Vehicles - Large 2 Axle Vehicles - 3 Axle Vehicles - 4+ Axle Trucks

	La Sierra Avenue Southbound					SR-91 Eastbound On Ramp Westbound					La Sierra Avenue Northbound					SR-91 Eastbound Off Ramp Eastbound							
Start Time	Left	Thru	Right	RTOR	App. Total	Left	Thru	Right	RTOR	App. Total	Left	Thru	Right	RTOR	App. Total	Left	Thru	Right	RTOR	App. Total	Exclu. Total	Inclu. Total	Int. Total
04:00 PM	91	317	0	0	408	0	0	0	0	0	0	252	74	13	326	63	1	235	53	299	66	1033	1099
04:15 PM	87	285	0	0	372	0	0	0	0	0	0	231	72	9	303	47	2	201	57	250	66	925	991
04:30 PM	86	289	0	0	375	0	0	0	0	0	0	230	89	8	319	54	4	227	73	285	81	979	1060
04:45 PM	68	319	0	0	387	0	0	0	0	0	0	230	85	7	315	52	2	211	68	265	75	967	1042
Total	332	1210	0	0	1542	0	0	0	0	0	0	943	320	37	1263	216	9	874	251	1099	288	3904	4192
05:00 PM	127	343	0	0	470	0	0	0	0	0	0	264	64	8	328	55	2	202	47	259	55	1057	1112
05:15 PM	103	376	0	0	479	0	0	0	0	0	0	256	69	8	325	52	8	193	46	253	54	1057	1111
05:30 PM	94	314	0	0	408	0	0	0	0	0	0	250	82	16	332	50	1	175	46	226	62	966	1028
05:45 PM	71	288	0	0	359	0	0	0	0	0	0	218	62	9	280	46	4	188	68	238	77	877	954
Total	395	1321	0	0	1716	0	0	0	0	0	0	988	277	41	1265	203	15	758	207	976	248	3957	4205
Grand Total	727	2531	0	0	3258	0	0	0	0	0	0	1931	597	78	2528	419	24	1632	458	2075	536	7861	8397
Apprch %	22.3	77.7	0			0	0	0			0	76.4	23.6			20.2	1.2	78.7					
Total %	9.2	32.2	0		41.4	0	0	0		0	0	24.6	7.6		32.2	5.3	0.3	20.8		26.4	6.4	93.6	
Passenger Vehicles	718	2493	0		3211	0	0	0		0	0	1888	583		2548	411	23	1581		2460	0	0	8219
% Passenger Vehicles	98.8	98.5	0	0	98.6	0	0	0	0	0	0	97.8	97.7	98.7	97.8	98.1	95.8	96.9	97.2	97.1	0	0	97.9
Large 2 Axle Vehicles	5	32	0		37	0	0	0		0	0	36	7		43	4	1	39		55	0	0	135
% Large 2 Axle Vehicles	0.7	1.3	0	0	1.1	0	0	0	0	0	0	1.9	1.2	0	1.7	1	4.2	2.4	2.4	2.2	0	0	1.6
3 Axle Vehicles	3	4	0		7	0	0	0		0	0	6	3		10	1	0	6		9	0	0	26
% 3 Axle Vehicles	0.4	0.2	0	0	0.2	0	0	0	0	0	0	0.3	0.5	1.3	0.4	0.2	0	0.4	0.4	0.4	0	0	0.3
4+ Axle Trucks	1	2	0		3	0	0	0		0	0	1	4		5	3	0	6		9	0	0	17
% 4+ Axle Trucks	0.1	0.1	0	0	0.1	0	0	0	0	0	0	0.1	0.7	0	0.2	0.7	0	0.4	0	0.4	0	0	0.2

	La Sierra Avenue Southbound				SR-91 Eastbound On Ramp Westbound				La Sierra Avenue Northbound				SR-91 Eastbound Off Ramp Eastbound				
Start Time	Left	Thru	Right	App. Total	Left	Thru	Right	App. Total	Left	Thru	Right	App. Total	Left	Thru	Right	App. Total	Int. Total
Peak Hour Analysis From 04:00 PM to 05:45 PM - Peak 1 of 1																	
Peak Hour for Entire Intersection Begins at 04:30 PM																	
04:30 PM	86	289	0	375	0	0	0	0	0	230	**89**	319	54	4	**227**	**285**	979
04:45 PM	68	319	0	387	0	0	0	0	0	230	85	315	52	2	211	265	967
05:00 PM	**127**	343	0	470	0	0	0	0	0	**264**	64	**328**	**55**	2	202	259	**1057**
05:15 PM	103	**376**	0	**479**	0	0	0	0	0	256	69	325	52	**8**	193	253	1057
Total Volume	384	1327	0	1711	0	0	0	0	0	980	307	1287	213	16	833	1062	4060
% App. Total	22.4	77.6	0		0	0	0		0	76.1	23.9		20.1	1.5	78.4		
PHF	.756	.882	.000	.893	.000	.000	.000	.000	.000	.928	.862	.981	.968	.500	.917	.932	.960

Counts Unlimited, Inc.
PO Box 1178
Corona, CA 92878
(951) 268-6268

City of Riverside
N/S: La Sierra Avenue
E/W: SR-91 Eastbound Ramps
Weather: Clear

File Name : 02_RIV_La S_91E PM
Site Code : 05123396
Start Date : 8/17/2023
Page No : 2

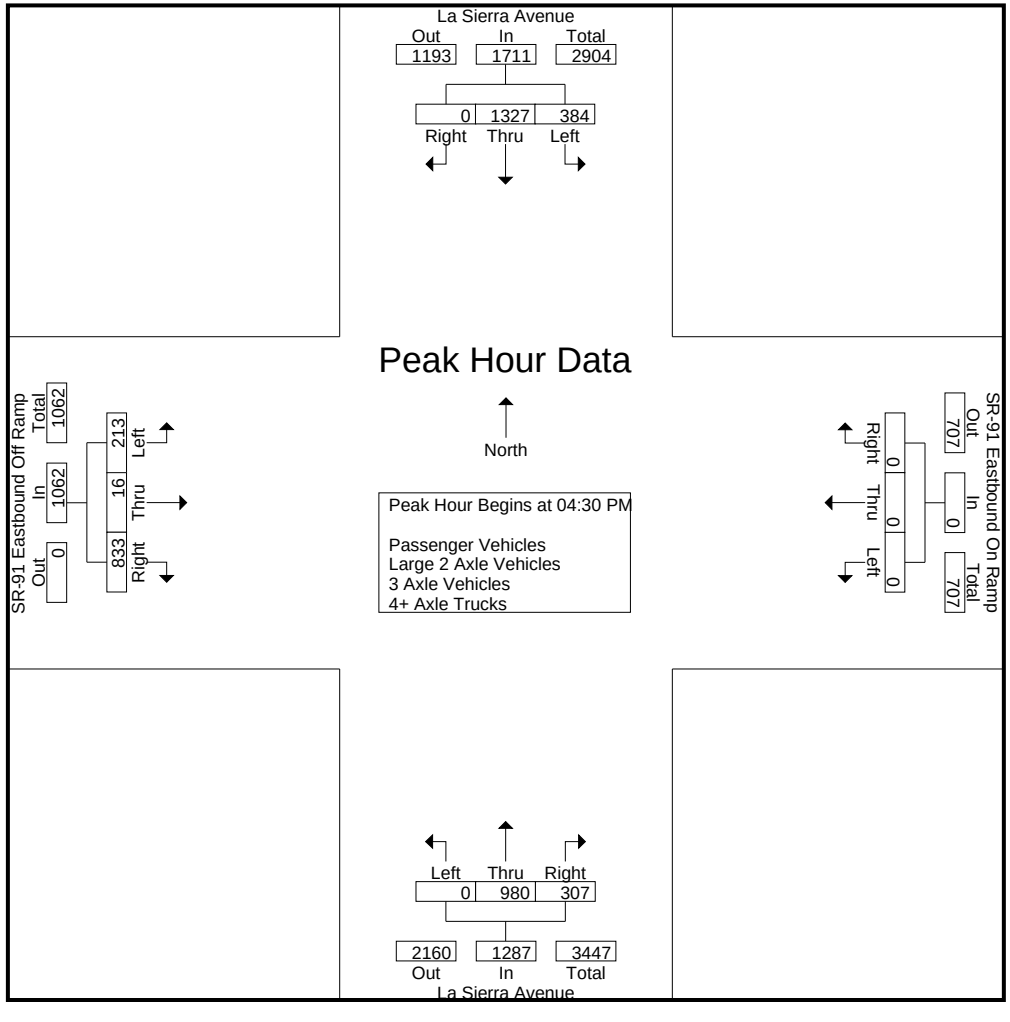

Counts Unlimited, Inc.
PO Box 1178
Corona, CA 92878
(951) 268-6268

City of Riverside
N/S: La Sierra Avenue
E/W: SR-91 Eastbound Ramps
Weather: Clear

File Name : 02_RIV_La S_91E PM
Site Code : 05123396
Start Date : 8/17/2023
Page No : 3

	La Sierra Avenue Southbound				SR-91 Eastbound On Ramp Westbound				La Sierra Avenue Northbound				SR-91 Eastbound Off Ramp Eastbound				
Start Time	Left	Thru	Right	App. Total	Left	Thru	Right	App. Total	Left	Thru	Right	App. Total	Left	Thru	Right	App. Total	Int. Total
Peak Hour Analysis From 04:00 PM to 05:45 PM - Peak 1 of 1																	
Peak Hour for Each Approach Begins at:																	
	04:45 PM				04:00 PM				04:45 PM				04:00 PM				
+0 mins.	68	319	0	387	0	0	0	0	0	230	**85**	315	**63**	1	**235**	**299**	
+15 mins.	**127**	343	0	470	0	0	0	0	0	**264**	64	328	47	2	201	250	
+30 mins.	103	**376**	0	**479**	0	0	0	0	0	256	69	325	54	**4**	227	285	
+45 mins.	94	314	0	408	0	0	0	0	0	250	82	**332**	52	2	211	265	
Total Volume	392	1352	0	1744	0	0	0	0	0	1000	300	1300	216	9	874	1099	
% App. Total	22.5	77.5	0		0	0	0		0	76.9	23.1		19.7	0.8	79.5		
PHF	.772	.899	.000	.910	.000	.000	.000	.000	.000	.947	.882	.979	.857	.563	.930	.919	

Counts Unlimited, Inc.
PO Box 1178
Corona, CA 92878
(951) 268-6268

City of Riverside
N/S: La Sierra Avenue
E/W: SR-91 Eastbound Ramps
Weather: Clear

File Name : 02_RIV_La S_91E PM
Site Code : 05123396
Start Date : 8/17/2023
Page No : 1

Groups Printed- Passenger Vehicles

	La Sierra Avenue Southbound					SR-91 Eastbound On Ramp Westbound					La Sierra Avenue Northbound					SR-91 Eastbound Off Ramp Eastbound							
Start Time	Left	Thru	Right	RTOR	App. Total	Left	Thru	Right	RTOR	App. Total	Left	Thru	Right	RTOR	App. Total	Left	Thru	Right	RTOR	App. Total	Exclu. Total	Inclu. Total	Int. Total
04:00 PM	88	308	0	0	396	0	0	0	0	0	0	247	74	13	321	62	1	223	48	286	61	1003	1064
04:15 PM	85	279	0	0	364	0	0	0	0	0	0	221	68	9	289	45	2	193	56	240	65	893	958
04:30 PM	86	284	0	0	370	0	0	0	0	0	0	224	85	8	309	53	3	224	73	280	81	959	1040
04:45 PM	68	317	0	0	385	0	0	0	0	0	0	228	83	7	311	51	2	202	65	255	72	951	1023
Total	327	1188	0	0	1515	0	0	0	0	0	0	920	310	37	1230	211	8	842	242	1061	279	3806	4085
05:00 PM	125	336	0	0	461	0	0	0	0	0	0	259	64	8	323	55	2	194	45	251	53	1035	1088
05:15 PM	102	371	0	0	473	0	0	0	0	0	0	251	68	7	319	52	8	189	45	249	52	1041	1093
05:30 PM	94	311	0	0	405	0	0	0	0	0	0	247	81	16	328	48	1	171	45	220	61	953	1014
05:45 PM	70	287	0	0	357	0	0	0	0	0	0	211	60	9	271	45	4	185	68	234	77	862	939
Total	391	1305	0	0	1696	0	0	0	0	0	0	968	273	40	1241	200	15	739	203	954	243	3891	4134
Grand Total	718	2493	0	0	3211	0	0	0	0	0	0	1888	583	77	2471	411	23	1581	445	2015	522	7697	8219
Apprch %	22.4	77.6	0			0	0	0			0	76.4	23.6			20.4	1.1	78.5					
Total %	9.3	32.4	0		41.7	0	0	0		0	0	24.5	7.6		32.1	5.3	0.3	20.5		26.2	6.4	93.6	

	La Sierra Avenue Southbound				SR-91 Eastbound On Ramp Westbound				La Sierra Avenue Northbound				SR-91 Eastbound Off Ramp Eastbound				
Start Time	Left	Thru	Right	App. Total	Left	Thru	Right	App. Total	Left	Thru	Right	App. Total	Left	Thru	Right	App. Total	Int. Total
Peak Hour Analysis From 04:30 PM to 05:15 PM - Peak 1 of 1																	
Peak Hour for Entire Intersection Begins at 04:30 PM																	
04:30 PM	86	284	0	370	0	0	0	0	0	224	**85**	309	53	3	**224**	**280**	959
04:45 PM	68	317	0	385	0	0	0	0	0	228	83	311	51	2	202	255	951
05:00 PM	**125**	336	0	461	0	0	0	0	0	**259**	64	**323**	**55**	2	194	251	1035
05:15 PM	102	**371**	0	**473**	0	0	0	0	0	251	68	319	52	**8**	189	249	**1041**
Total Volume	381	1308	0	1689	0	0	0	0	0	962	300	1262	211	15	809	1035	3986
% App. Total	22.6	77.4	0		0	0	0		0	76.2	23.8		20.4	1.4	78.2		
PHF	.762	.881	.000	.893	.000	.000	.000	.000	.000	.929	.882	.977	.959	.469	.903	.924	.957

Counts Unlimited, Inc.
PO Box 1178
Corona, CA 92878
(951) 268-6268

City of Riverside
N/S: La Sierra Avenue
E/W: SR-91 Eastbound Ramps
Weather: Clear

File Name : 02_RIV_La S_91E PM
Site Code : 05123396
Start Date : 8/17/2023
Page No : 2

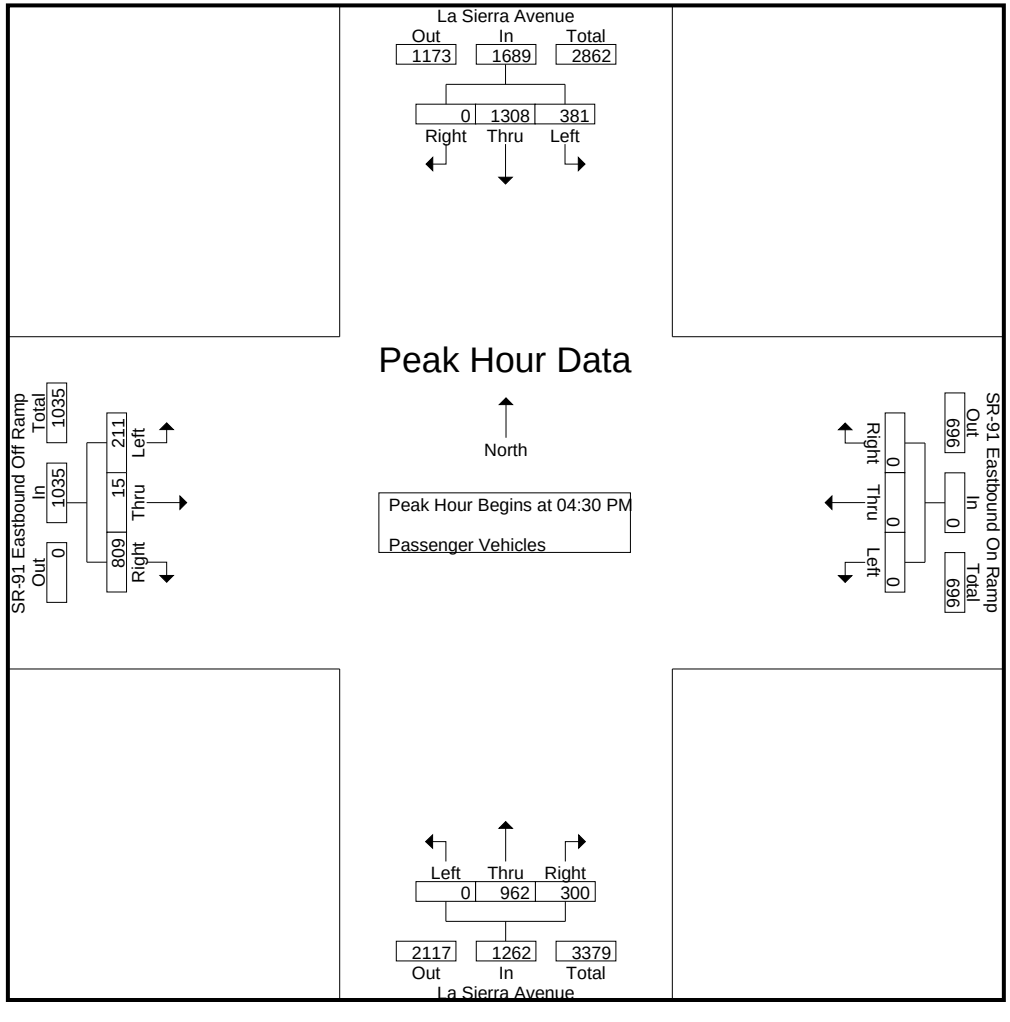

Counts Unlimited, Inc.
PO Box 1178
Corona, CA 92878
(951) 268-6268

City of Riverside
N/S: La Sierra Avenue
E/W: SR-91 Eastbound Ramps
Weather: Clear

File Name : 02_RIV_La S_91E PM
Site Code : 05123396
Start Date : 8/17/2023
Page No : 3

	La Sierra Avenue Southbound				SR-91 Eastbound On Ramp Westbound				La Sierra Avenue Northbound				SR-91 Eastbound Off Ramp Eastbound				
Start Time	Left	Thru	Right	App. Total	Left	Thru	Right	App. Total	Left	Thru	Right	App. Total	Left	Thru	Right	App. Total	Int. Total
Peak Hour Analysis From 04:30 PM to 05:15 PM - Peak 1 of 1																	
Peak Hour for Each Approach Begins at:																	
	04:30 PM				04:30 PM				04:30 PM				04:30 PM				
+0 mins.	86	284	0	370	0	0	0	0	0	224	**85**	309	53	3	**224**	**280**	
+15 mins.	68	317	0	385	0	0	0	0	0	228	83	311	51	2	202	255	
+30 mins.	**125**	336	0	461	0	0	0	0	0	**259**	64	**323**	**55**	2	194	251	
+45 mins.	102	**371**	0	**473**	0	0	0	0	0	251	68	319	52	**8**	189	249	
Total Volume	381	1308	0	1689	0	0	0	0	0	962	300	1262	211	15	809	1035	
% App. Total	22.6	77.4	0		0	0	0		0	76.2	23.8		20.4	1.4	78.2		
PHF	.762	.881	.000	.893	.000	.000	.000	.000	.000	.929	.882	.977	.959	.469	.903	.924	

Counts Unlimited, Inc.
PO Box 1178
Corona, CA 92878
(951) 268-6268

City of Riverside
N/S: La Sierra Avenue
E/W: SR-91 Eastbound Ramps
Weather: Clear

File Name : 02_RIV_La S_91E PM
Site Code : 05123396
Start Date : 8/17/2023
Page No : 1

Groups Printed- Large 2 Axle Vehicles

	La Sierra Avenue Southbound					SR-91 Eastbound On Ramp Westbound					La Sierra Avenue Northbound					SR-91 Eastbound Off Ramp Eastbound							
Start Time	Left	Thru	Right	RTOR	App. Total	Left	Thru	Right	RTOR	App. Total	Left	Thru	Right	RTOR	App. Total	Left	Thru	Right	RTOR	App. Total	Exclu. Total	Inclu. Total	Int. Total
04:00 PM	1	9	0	0	10	0	0	0	0	0	0	4	0	0	4	0	0	11	5	11	5	25	30
04:15 PM	2	6	0	0	8	0	0	0	0	0	0	9	4	0	13	1	0	6	1	7	1	28	29
04:30 PM	0	3	0	0	3	0	0	0	0	0	0	4	1	0	5	1	1	3	0	5	0	13	13
04:45 PM	0	2	0	0	2	0	0	0	0	0	0	2	0	0	2	0	0	4	1	4	1	8	9
Total	3	20	0	0	23	0	0	0	0	0	0	19	5	0	24	2	1	24	7	27	7	74	81
05:00 PM	0	5	0	0	5	0	0	0	0	0	0	5	0	0	5	0	0	7	2	7	2	17	19
05:15 PM	1	4	0	0	5	0	0	0	0	0	0	3	0	0	3	0	0	3	1	3	1	11	12
05:30 PM	0	2	0	0	2	0	0	0	0	0	0	3	0	0	3	1	0	4	1	5	1	10	11
05:45 PM	1	1	0	0	2	0	0	0	0	0	0	6	2	0	8	1	0	1	0	2	0	12	12
Total	2	12	0	0	14	0	0	0	0	0	0	17	2	0	19	2	0	15	4	17	4	50	54
Grand Total	5	32	0	0	37	0	0	0	0	0	0	36	7	0	43	4	1	39	11	44	11	124	135
Apprch %	13.5	86.5	0			0	0	0			0	83.7	16.3			9.1	2.3	88.6					
Total %	4	25.8	0		29.8	0	0	0		0	0	29	5.6		34.7	3.2	0.8	31.5		35.5	8.1	91.9	

	La Sierra Avenue Southbound				SR-91 Eastbound On Ramp Westbound				La Sierra Avenue Northbound				SR-91 Eastbound Off Ramp Eastbound				
Start Time	Left	Thru	Right	App. Total	Left	Thru	Right	App. Total	Left	Thru	Right	App. Total	Left	Thru	Right	App. Total	Int. Total
Peak Hour Analysis From 04:30 PM to 05:15 PM - Peak 1 of 1																	
Peak Hour for Entire Intersection Begins at 04:30 PM																	
04:30 PM	0	3	0	3	0	0	0	0	0	4	**1**	**5**	**1**	**1**	3	5	13
04:45 PM	0	2	0	2	0	0	0	0	0	2	0	2	0	0	4	4	8
05:00 PM	0	**5**	0	**5**	0	0	0	0	0	**5**	0	5	0	0	**7**	**7**	**17**
05:15 PM	**1**	4	0	5	0	0	0	0	0	3	0	3	0	0	3	3	11
Total Volume	1	14	0	15	0	0	0	0	0	14	1	15	1	1	17	19	49
% App. Total	6.7	93.3	0		0	0	0		0	93.3	6.7		5.3	5.3	89.5		
PHF	.250	.700	.000	.750	.000	.000	.000	.000	.000	.700	.250	.750	.250	.250	.607	.679	.721

Counts Unlimited, Inc.
PO Box 1178
Corona, CA 92878
(951) 268-6268

City of Riverside
N/S: La Sierra Avenue
E/W: SR-91 Eastbound Ramps
Weather: Clear

File Name : 02_RIV_La S_91E PM
Site Code : 05123396
Start Date : 8/17/2023
Page No : 2

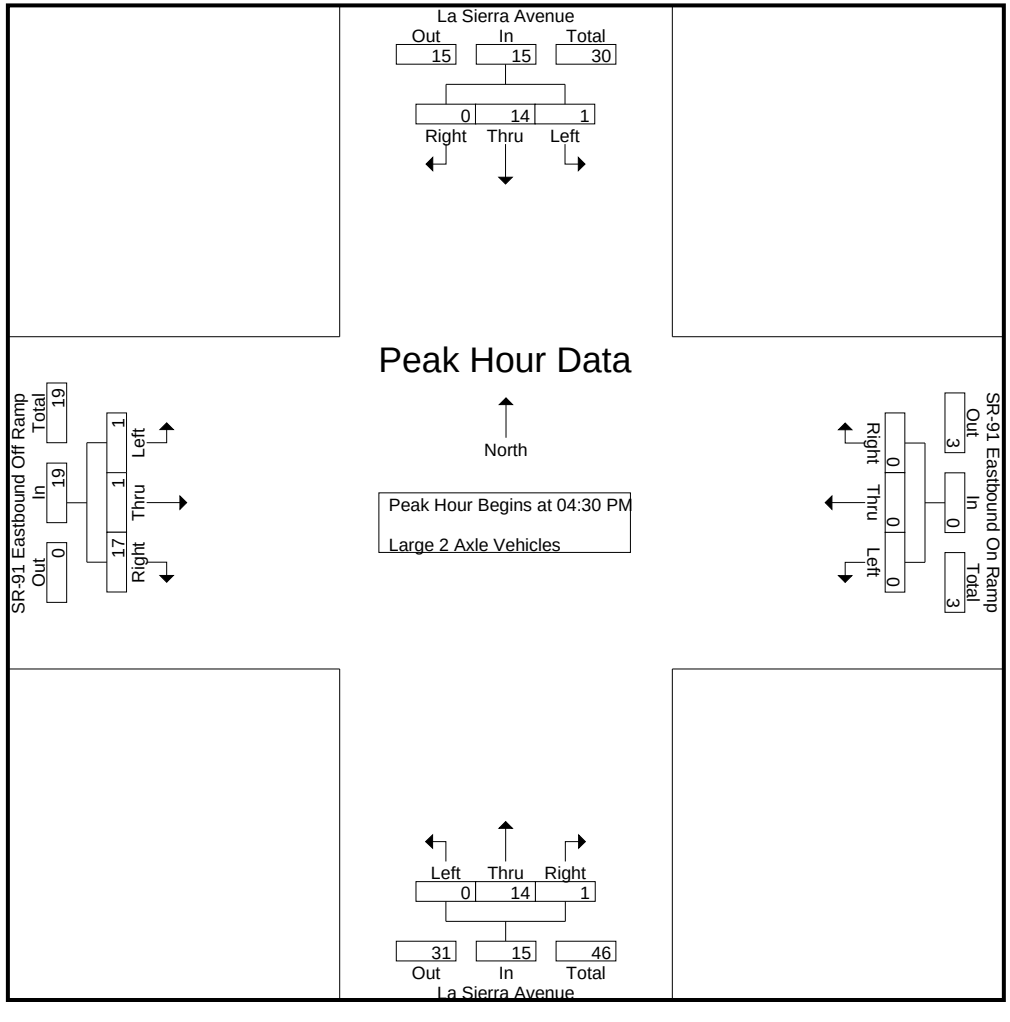

Counts Unlimited, Inc.
PO Box 1178
Corona, CA 92878
(951) 268-6268

City of Riverside
N/S: La Sierra Avenue
E/W: SR-91 Eastbound Ramps
Weather: Clear

File Name : 02_RIV_La S_91E PM
Site Code : 05123396
Start Date : 8/17/2023

	La Sierra Avenue Southbound				SR-91 Eastbound On Ramp Westbound				La Sierra Avenue Northbound				SR-91 Eastbound Off Ramp Eastbound				
Start Time	Left	Thru	Right	App. Total	Left	Thru	Right	App. Total	Left	Thru	Right	App. Total	Left	Thru	Right	App. Total	Int. Total
Peak Hour Analysis From 04:30 PM to 05:15 PM - Peak 1 of 1																	
Peak Hour for Each Approach Begins at:																	
	04:30 PM				04:30 PM				04:30 PM				04:30 PM				
+0 mins.	0	3	0	3	0	0	0	0	0	4	**1**	**5**	**1**	**1**	3	5	
+15 mins.	0	2	0	2	0	0	0	0	0	2	0	2	0	0	4	4	
+30 mins.	0	**5**	0	**5**	0	0	0	0	0	**5**	0	5	0	0	**7**	**7**	
+45 mins.	**1**	4	0	5	0	0	0	0	0	3	0	3	0	0	3	3	
Total Volume	1	14	0	15	0	0	0	0	0	14	1	15	1	1	17	19	
% App. Total	6.7	93.3	0		0	0	0		0	93.3	6.7		5.3	5.3	89.5		
PHF	.250	.700	.000	.750	.000	.000	.000	.000	.000	.700	.250	.750	.250	.250	.607	.679	

Counts Unlimited, Inc.
PO Box 1178
Corona, CA 92878
(951) 268-6268

City of Riverside
N/S: La Sierra Avenue
E/W: SR-91 Eastbound Ramps
Weather: Clear

File Name : 02_RIV_La S_91E PM
Site Code : 05123396
Start Date : 8/17/2023
Page No : 1

Groups Printed- 3 Axle Vehicles

	La Sierra Avenue Southbound					SR-91 Eastbound On Ramp Westbound					La Sierra Avenue Northbound					SR-91 Eastbound Off Ramp Eastbound							
Start Time	Left	Thru	Right	RTOR	App. Total	Left	Thru	Right	RTOR	App. Total	Left	Thru	Right	RTOR	App. Total	Left	Thru	Right	RTOR	App. Total	Exclu. Total	Inclu. Total	Int. Total
04:00 PM	1	0	0	0	1	0	0	0	0	0	0	1	0	0	1	1	0	0	0	1	0	3	3
04:15 PM	0	0	0	0	0	0	0	0	0	0	0	1	0	0	1	0	0	1	0	1	0	2	2
04:30 PM	0	1	0	0	1	0	0	0	0	0	0	1	0	0	1	0	0	0	0	0	0	2	2
04:45 PM	0	0	0	0	0	0	0	0	0	0	0	0	1	0	1	0	0	3	2	3	2	4	6
Total	1	1	0	0	2	0	0	0	0	0	0	3	1	0	4	1	0	4	2	5	2	11	13
05:00 PM	2	2	0	0	4	0	0	0	0	0	0	0	0	0	0	0	0	1	0	1	0	5	5
05:15 PM	0	0	0	0	0	0	0	0	0	0	0	2	1	1	3	0	0	0	0	0	1	3	4
05:30 PM	0	1	0	0	1	0	0	0	0	0	0	0	1	0	1	0	0	0	0	0	0	2	2
05:45 PM	0	0	0	0	0	0	0	0	0	0	0	1	0	0	1	0	0	1	0	1	0	2	2
Total	2	3	0	0	5	0	0	0	0	0	0	3	2	1	5	0	0	2	0	2	1	12	13
Grand Total	3	4	0	0	7	0	0	0	0	0	0	6	3	1	9	1	0	6	2	7	3	23	26
Apprch %	42.9	57.1	0			0	0	0			0	66.7	33.3			14.3	0	85.7					
Total %	13	17.4	0		30.4	0	0	0		0	0	26.1	13		39.1	4.3	0	26.1		30.4	11.5	88.5	

	La Sierra Avenue Southbound				SR-91 Eastbound On Ramp Westbound				La Sierra Avenue Northbound				SR-91 Eastbound Off Ramp Eastbound				
Start Time	Left	Thru	Right	App. Total	Left	Thru	Right	App. Total	Left	Thru	Right	App. Total	Left	Thru	Right	App. Total	Int. Total
Peak Hour Analysis From 04:30 PM to 05:15 PM - Peak 1 of 1																	
Peak Hour for Entire Intersection Begins at 04:30 PM																	
04:30 PM	0	1	0	1	0	0	0	0	0	1	0	1	0	0	0	0	2
04:45 PM	0	0	0	0	0	0	0	0	0	0	**1**	1	0	0	**3**	**3**	4
05:00 PM	**2**	**2**	0	**4**	0	0	0	0	0	0	0	0	0	0	1	1	**5**
05:15 PM	0	0	0	0	0	0	0	0	0	**2**	1	**3**	0	0	0	0	3
Total Volume	2	3	0	5	0	0	0	0	0	3	2	5	0	0	4	4	14
% App. Total	40	60	0		0	0	0		0	60	40		0	0	100		
PHF	.250	.375	.000	.313	.000	.000	.000	.000	.000	.375	.500	.417	.000	.000	.333	.333	.700

Counts Unlimited, Inc.
PO Box 1178
Corona, CA 92878
(951) 268-6268

City of Riverside
N/S: La Sierra Avenue
E/W: SR-91 Eastbound Ramps
Weather: Clear

File Name : 02_RIV_La S_91E PM
Site Code : 05123396
Start Date : 8/17/2023
Page No : 2

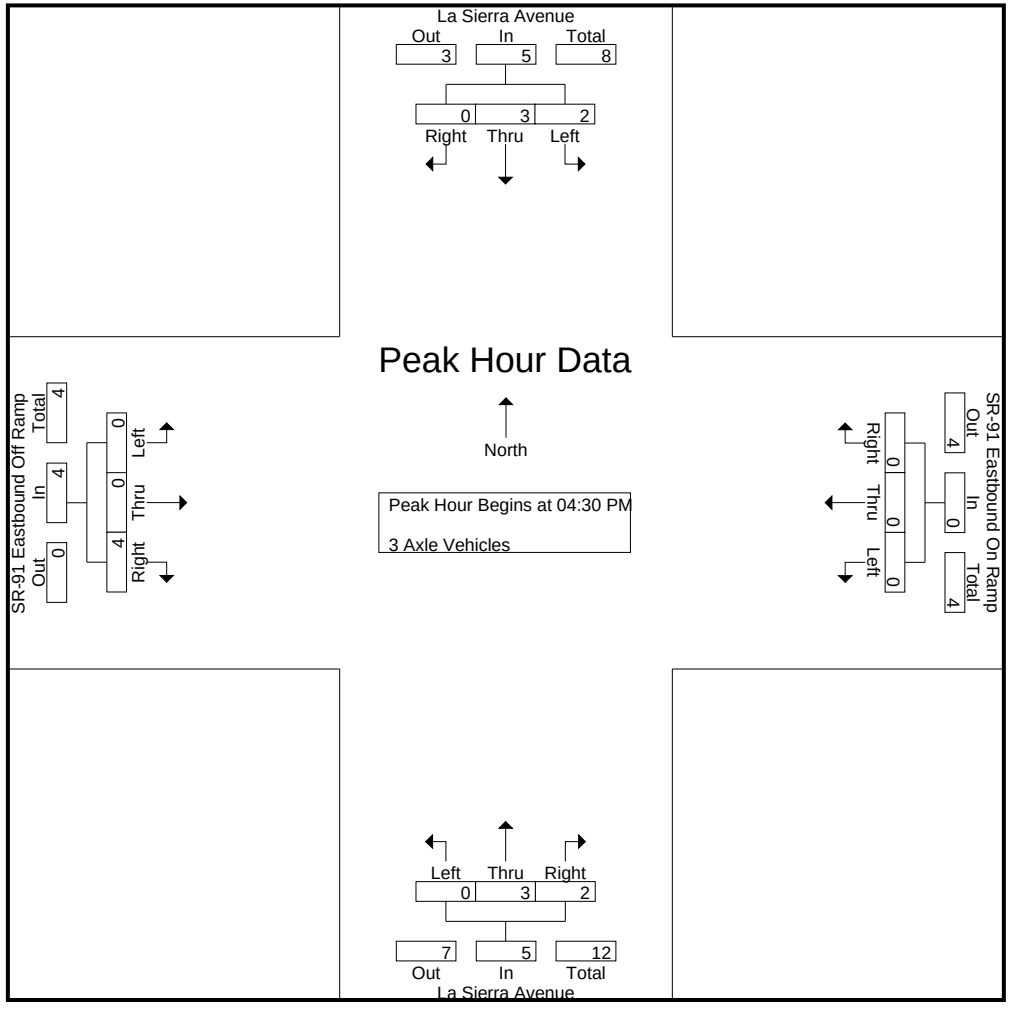

Counts Unlimited, Inc.
PO Box 1178
Corona, CA 92878
(951) 268-6268

City of Riverside
N/S: La Sierra Avenue
E/W: SR-91 Eastbound Ramps
Weather: Clear

File Name : 02_RIV_La S_91E PM
Site Code : 05123396
Start Date : 8/17/2023

	La Sierra Avenue Southbound				SR-91 Eastbound On Ramp Westbound				La Sierra Avenue Northbound				SR-91 Eastbound Off Ramp Eastbound				
Start Time	Left	Thru	Right	App. Total	Left	Thru	Right	App. Total	Left	Thru	Right	App. Total	Left	Thru	Right	App. Total	Int. Total
Peak Hour Analysis From 04:30 PM to 05:15 PM - Peak 1 of 1																	
Peak Hour for Each Approach Begins at:																	
	04:30 PM				04:30 PM				04:30 PM				04:30 PM				
+0 mins.	0	1	0	1	0	0	0	0	0	1	0	1	0	0	0	0	
+15 mins.	0	0	0	0	0	0	0	0	0	0	**1**	1	0	0	**3**	**3**	
+30 mins.	**2**	**2**	0	**4**	0	0	0	0	0	0	0	0	0	0	1	1	
+45 mins.	0	0	0	0	0	0	0	0	0	**2**	1	**3**	0	0	0	0	
Total Volume	2	3	0	5	0	0	0	0	0	3	2	5	0	0	4	4	
% App. Total	40	60	0		0	0	0		0	60	40		0	0	100		
PHF	.250	.375	.000	.313	.000	.000	.000	.000	.000	.375	.500	.417	.000	.000	.333	.333	

Counts Unlimited, Inc.
PO Box 1178
Corona, CA 92878
(951) 268-6268

City of Riverside
N/S: La Sierra Avenue
E/W: SR-91 Eastbound Ramps
Weather: Clear

File Name : 02_RIV_La S_91E PM
Site Code : 05123396
Start Date : 8/17/2023
Page No : 1

Groups Printed- 4+ Axle Trucks

	La Sierra Avenue Southbound					SR-91 Eastbound On Ramp Westbound					La Sierra Avenue Northbound					SR-91 Eastbound Off Ramp Eastbound							
Start Time	Left	Thru	Right	RTOR	App. Total	Left	Thru	Right	RTOR	App. Total	Left	Thru	Right	RTOR	App. Total	Left	Thru	Right	RTOR	App. Total	Exclu. Total	Inclu. Total	Int. Total
04:00 PM	1	0	0	0	1	0	0	0	0	0	0	0	0	0	0	0	0	1	0	1	0	2	2
04:15 PM	0	0	0	0	0	0	0	0	0	0	0	0	0	0	0	1	0	1	0	2	0	2	2
04:30 PM	0	1	0	0	1	0	0	0	0	0	0	1	3	0	4	0	0	0	0	0	0	5	5
04:45 PM	0	0	0	0	0	0	0	0	0	0	0	0	1	0	1	1	0	2	0	3	0	4	4
Total	1	1	0	0	2	0	0	0	0	0	0	1	4	0	5	2	0	4	0	6	0	13	13
05:00 PM	0	0	0	0	0	0	0	0	0	0	0	0	0	0	0	0	0	0	0	0	0	0	0
05:15 PM	0	1	0	0	1	0	0	0	0	0	0	0	0	0	0	0	0	1	0	1	0	2	2
05:30 PM	0	0	0	0	0	0	0	0	0	0	0	0	0	0	0	1	0	0	0	1	0	1	1
05:45 PM	0	0	0	0	0	0	0	0	0	0	0	0	0	0	0	0	0	1	0	1	0	1	1
Total	0	1	0	0	1	0	0	0	0	0	0	0	0	0	0	1	0	2	0	3	0	4	4
Grand Total	1	2	0	0	3	0	0	0	0	0	0	1	4	0	5	3	0	6	0	9	0	17	17
Apprch %	33.3	66.7	0			0	0	0			0	20	80			33.3	0	66.7					
Total %	5.9	11.8	0		17.6	0	0	0		0	0	5.9	23.5		29.4	17.6	0	35.3		52.9	0	100	

	La Sierra Avenue Southbound				SR-91 Eastbound On Ramp Westbound				La Sierra Avenue Northbound				SR-91 Eastbound Off Ramp Eastbound				
Start Time	Left	Thru	Right	App. Total	Left	Thru	Right	App. Total	Left	Thru	Right	App. Total	Left	Thru	Right	App. Total	Int. Total
Peak Hour Analysis From 04:30 PM to 05:15 PM - Peak 1 of 1																	
Peak Hour for Entire Intersection Begins at 04:30 PM																	
04:30 PM	0	**1**	0	**1**	0	0	0	0	0	**1**	**3**	**4**	0	0	0	0	**5**
04:45 PM	0	0	0	0	0	0	0	0	0	0	1	1	**1**	0	**2**	**3**	4
05:00 PM	0	0	0	0	0	0	0	0	0	0	0	0	0	0	0	0	0
05:15 PM	0	1	0	1	0	0	0	0	0	0	0	0	0	0	1	1	2
Total Volume	0	2	0	2	0	0	0	0	0	1	4	5	1	0	3	4	11
% App. Total	0	100	0		0	0	0		0	20	80		25	0	75		
PHF	.000	.500	.000	.500	.000	.000	.000	.000	.000	.250	.333	.313	.250	.000	.375	.333	.550

Counts Unlimited, Inc.
PO Box 1178
Corona, CA 92878
(951) 268-6268

City of Riverside
N/S: La Sierra Avenue
E/W: SR-91 Eastbound Ramps
Weather: Clear

File Name : 02_RIV_La S_91E PM
Site Code : 05123396
Start Date : 8/17/2023
Page No : 2

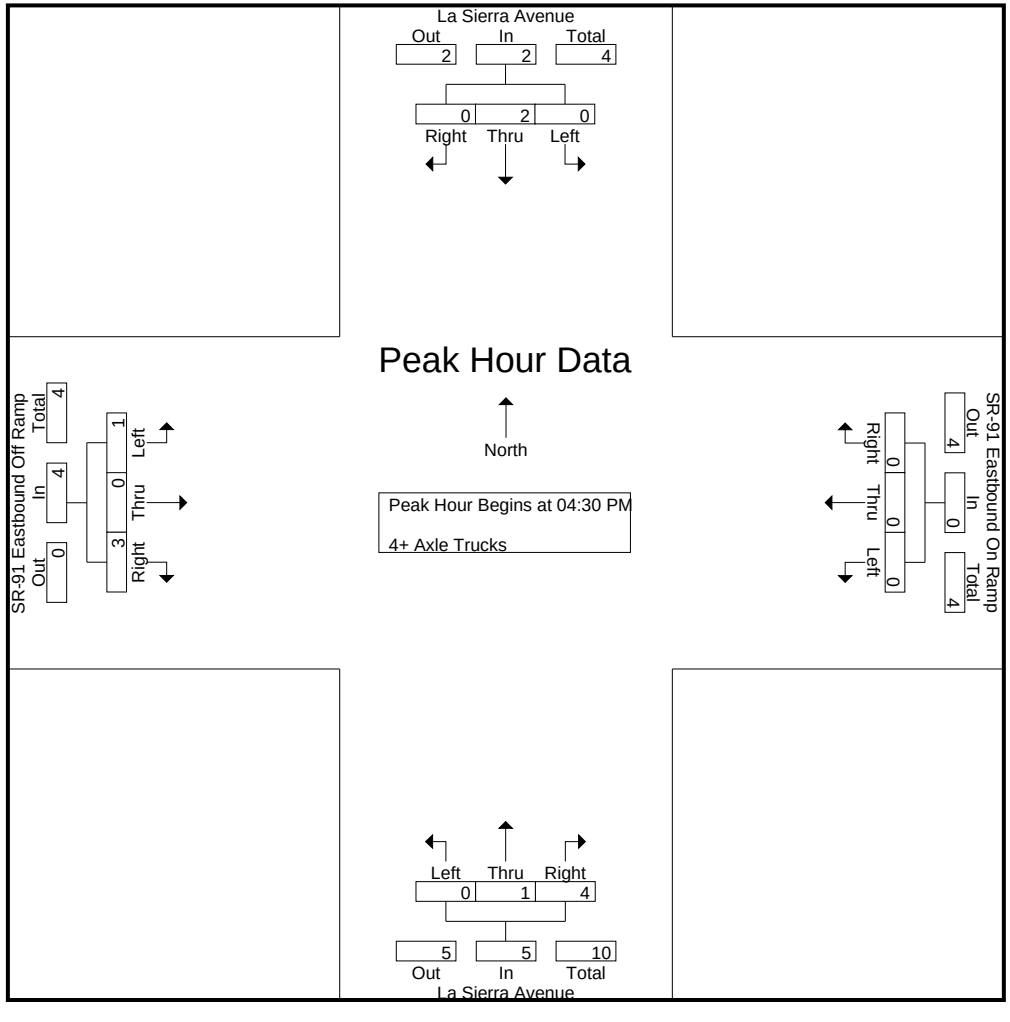

Counts Unlimited, Inc.
PO Box 1178
Corona, CA 92878
(951) 268-6268

City of Riverside
N/S: La Sierra Avenue
E/W: SR-91 Eastbound Ramps
Weather: Clear

File Name : 02_RIV_La S_91E PM
Site Code : 05123396
Start Date : 8/17/2023

	La Sierra Avenue Southbound				SR-91 Eastbound On Ramp Westbound				La Sierra Avenue Northbound				SR-91 Eastbound Off Ramp Eastbound				
Start Time	Left	Thru	Right	App. Total	Left	Thru	Right	App. Total	Left	Thru	Right	App. Total	Left	Thru	Right	App. Total	Int. Total
Peak Hour Analysis From 04:30 PM to 05:15 PM - Peak 1 of 1																	
Peak Hour for Each Approach Begins at:																	
	04:30 PM				04:30 PM				04:30 PM				04:30 PM				
+0 mins.	0	**1**	0	**1**	0	0	0	0	0	**1**	**3**	**4**	0	0	0	0	
+15 mins.	0	0	0	0	0	0	0	0	0	0	1	1	**1**	0	**2**	**3**	
+30 mins.	0	0	0	0	0	0	0	0	0	0	0	0	0	0	0	0	
+45 mins.	0	1	0	1	0	0	0	0	0	0	0	0	0	0	1	1	
Total Volume	0	2	0	2	0	0	0	0	0	1	4	5	1	0	3	4	
% App. Total	0	100	0		0	0	0		0	20	80		25	0	75		
PHF	.000	.500	.000	.500	.000	.000	.000	.000	.000	.250	.333	.313	.250	.000	.375	.333	

Location: Riverside
N/S: La Sierra Avenue
E/W: SR-91 EB Ramps

Date: 8/17/2023
Day: Thursday

PEDESTRIANS

	North Leg La Sierra Avenue	East Leg SR-91 EB Ramps	South Leg La Sierra Avenue	West Leg SR-91 EB Ramps	
	Pedestrians	Pedestrians	Pedestrians	Pedestrians	
7:00 AM	0	3	0	3	6
7:15 AM	0	2	0	4	6
7:30 AM	0	0	0	1	1
7:45 AM	0	3	0	1	4
8:00 AM	0	1	0	2	3
8:15 AM	0	1	0	0	1
8:30 AM	0	0	0	0	0
8:45 AM	0	1	0	3	4
TOTAL VOLUMES:	0	11	0	14	25

	North Leg La Sierra Avenue	East Leg SR-91 EB Ramps	South Leg La Sierra Avenue	West Leg SR-91 EB Ramps	
	Pedestrians	Pedestrians	Pedestrians	Pedestrians	
4:00 PM	0	2	0	1	3
4:15 PM	0	2	0	2	4
4:30 PM	0	0	0	1	1
4:45 PM	0	1	0	3	4
5:00 PM	0	0	0	3	3
5:15 PM	0	0	0	1	1
5:30 PM	0	0	0	1	1
5:45 PM	0	0	0	1	1
TOTAL VOLUMES:	0	5	0	13	18

Counts Unlimited, Inc.
PO Box 1178
Corona, CA 92878
951-268-6268

Location: Riverside
N/S: La Sierra Avenue
E/W: SR-91 EB Ramps

Date: 8/17/2023
Day: Thursday

BICYCLES

	Southbound La Sierra Avenue			Westbound SR-91 EB Ramps			Northbound La Sierra Avenue			Eastbound SR-91 EB Ramps			
	Left	Thru	Right	Left	Thru	Right	Left	Thru	Right	Left	Thru	Right	
7:00 AM	0	0	0	0	0	0	0	0	0	0	0	0	0
7:15 AM	0	0	0	0	0	0	0	0	0	0	0	0	0
7:30 AM	0	2	0	0	0	0	0	1	0	0	0	0	3
7:45 AM	0	0	0	0	0	0	0	0	0	0	0	0	0
8:00 AM	0	0	0	0	0	0	0	0	0	0	0	0	0
8:15 AM	0	0	0	0	0	0	0	0	0	0	0	0	0
8:30 AM	0	0	0	0	0	0	0	1	0	0	0	0	1
8:45 AM	0	0	0	0	0	0	0	1	0	0	0	0	1
TOTAL VOLUMES:	0	2	0	0	0	0	0	3	0	0	0	0	5

	Southbound La Sierra Avenue			Westbound SR-91 EB Ramps			Northbound La Sierra Avenue			Eastbound SR-91 EB Ramps			
	Left	Thru	Right	Left	Thru	Right	Left	Thru	Right	Left	Thru	Right	
4:00 PM	0	0	0	0	0	0	0	0	0	0	0	0	0
4:15 PM	0	0	0	0	0	0	0	0	0	0	0	0	0
4:30 PM	0	0	0	0	0	0	0	1	0	0	0	0	1
4:45 PM	0	0	0	0	0	0	0	1	0	0	0	0	1
5:00 PM	0	1	0	0	0	0	0	2	0	0	0	0	3
5:15 PM	0	2	0	0	0	0	0	0	0	0	0	0	2
5:30 PM	0	0	0	0	0	0	0	0	0	0	0	0	0
5:45 PM	0	1	0	0	0	0	0	1	0	0	0	0	2
TOTAL VOLUMES:	0	4	0	0	0	0	0	5	0	0	0	0	9

Counts Unlimited, Inc.
PO Box 1178
Corona, CA 91878
951-268-6268

Counts Unlimited, Inc.
PO Box 1178
Corona, CA 92878
(951) 268-6268

City of Riverside
N/S: La Sierra Avenue
E/W: Indiana Avenue
Weather: Clear

File Name : 03_RIV_La S_Indi AM
Site Code : 05123396
Start Date : 8/15/2023
Page No : 1

Groups Printed- Total Volume

	La Sierra Avenue Southbound					Indiana Avenue Westbound					La Sierra Avenue Northbound					Indiana Avenue Eastbound							
Start Time	Left	Thru	Right	RTOR	App. Total	Left	Thru	Right	RTOR	App. Total	Left	Thru	Right	RTOR	App. Total	Left	Thru	Right	RTOR	App. Total	Exclu. Total	Inclu. Total	Int. Total
07:00 AM	21	117	28	13	166	18	33	36	18	87	53	263	8	2	324	67	30	15	12	112	45	689	734
07:15 AM	36	125	40	28	201	22	45	43	20	110	62	284	8	5	354	61	32	18	11	111	64	776	840
07:30 AM	30	201	41	19	272	33	39	39	31	111	75	257	19	8	351	109	36	28	22	173	80	907	987
07:45 AM	27	276	50	22	353	31	54	40	15	125	94	343	14	5	451	114	44	21	11	179	53	1108	1161
Total	114	719	159	82	992	104	171	158	84	433	284	1147	49	20	1480	351	142	82	56	575	242	3480	3722
08:00 AM	33	196	64	43	293	24	58	45	15	127	103	327	27	19	457	150	61	41	20	252	97	1129	1226
08:15 AM	27	140	60	47	227	27	68	39	22	134	81	296	15	7	392	123	102	35	18	260	94	1013	1107
08:30 AM	39	129	38	27	206	15	54	27	16	96	57	299	12	4	368	124	44	31	15	199	62	869	931
08:45 AM	33	105	28	18	166	8	38	31	22	77	49	241	12	3	302	88	36	13	9	137	52	682	734
Total	132	570	190	135	892	74	218	142	75	434	290	1163	66	33	1519	485	243	120	62	848	305	3693	3998
Grand Total	246	1289	349	217	1884	178	389	300	159	867	574	2310	115	53	2999	836	385	202	118	1423	547	7173	7720
Apprch %	13.1	68.4	18.5			20.5	44.9	34.6			19.1	77	3.8			58.7	27.1	14.2					
Total %	3.4	18	4.9		26.3	2.5	5.4	4.2		12.1	8	32.2	1.6		41.8	11.7	5.4	2.8		19.8	7.1	92.9	

	La Sierra Avenue Southbound				Indiana Avenue Westbound				La Sierra Avenue Northbound				Indiana Avenue Eastbound				
Start Time	Left	Thru	Right	App. Total	Left	Thru	Right	App. Total	Left	Thru	Right	App. Total	Left	Thru	Right	App. Total	Int. Total
Peak Hour Analysis From 07:00 AM to 08:45 AM - Peak 1 of 1																	
Peak Hour for Entire Intersection Begins at 07:30 AM																	
07:30 AM	30	201	41	272	**33**	39	39	111	75	257	19	351	109	36	28	173	907
07:45 AM	27	**276**	50	**353**	31	54	40	125	94	**343**	14	451	114	44	21	179	1108
08:00 AM	**33**	196	**64**	293	24	58	**45**	127	**103**	327	**27**	**457**	**150**	61	**41**	252	**1129**
08:15 AM	27	140	60	227	27	**68**	39	**134**	81	296	15	392	123	**102**	35	**260**	1013
Total Volume	117	813	215	1145	115	219	163	497	353	1223	75	1651	496	243	125	864	4157
% App. Total	10.2	71	18.8		23.1	44.1	32.8		21.4	74.1	4.5		57.4	28.1	14.5		
PHF	.886	.736	.840	.811	.871	.805	.906	.927	.857	.891	.694	.903	.827	.596	.762	.831	.921

Counts Unlimited, Inc.
PO Box 1178
Corona, CA 92878
(951) 268-6268

City of Riverside
N/S: La Sierra Avenue
E/W: Indiana Avenue
Weather: Clear

File Name : 03_RIV_La S_Indi AM
Site Code : 05123396
Start Date : 8/15/2023
Page No : 2

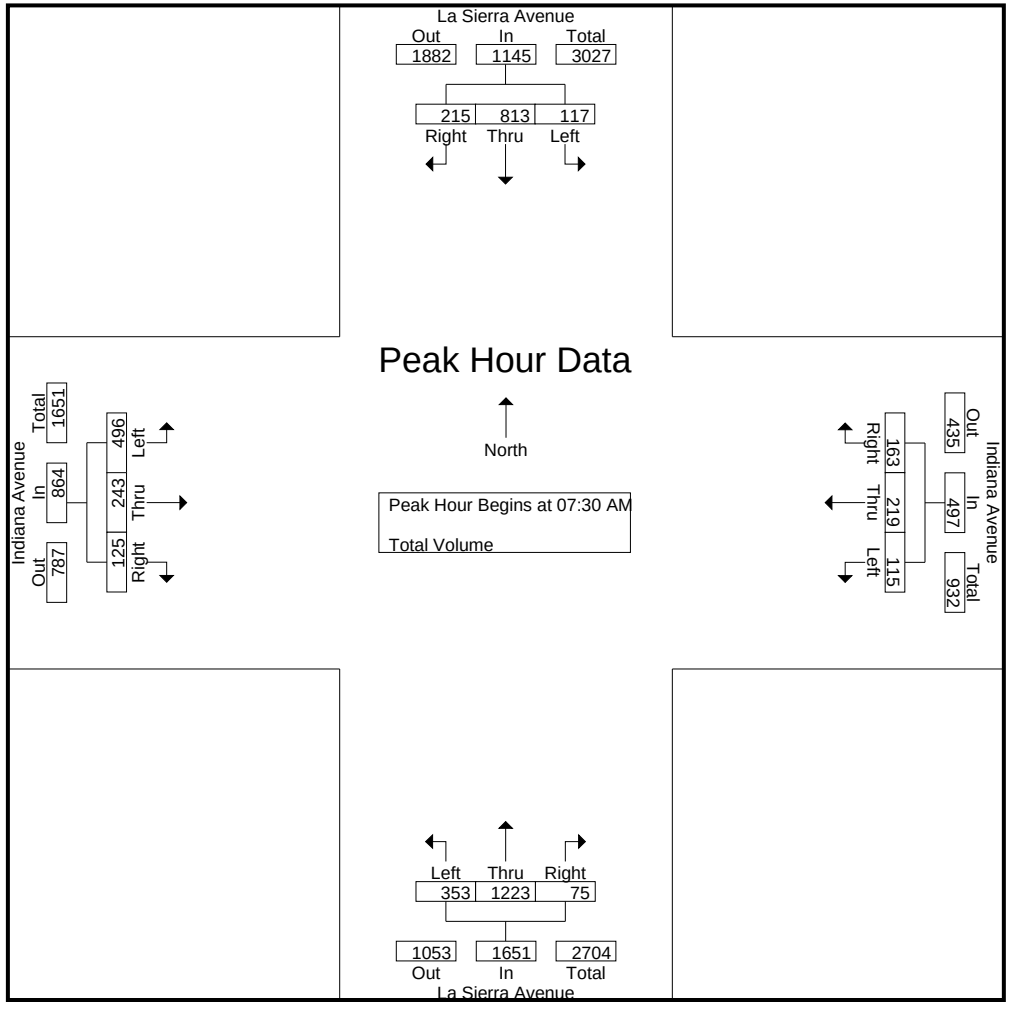

Counts Unlimited, Inc.
PO Box 1178
Corona, CA 92878
(951) 268-6268

City of Riverside
N/S: La Sierra Avenue
E/W: Indiana Avenue
Weather: Clear

File Name : 03_RIV_La S_Indi AM
Site Code : 05123396
Start Date : 8/15/2023

	La Sierra Avenue Southbound				Indiana Avenue Westbound				La Sierra Avenue Northbound				Indiana Avenue Eastbound				
Start Time	Left	Thru	Right	App. Total	Left	Thru	Right	App. Total	Left	Thru	Right	App. Total	Left	Thru	Right	App. Total	Int. Total
Peak Hour Analysis From 07:00 AM to 08:45 AM - Peak 1 of 1																	
Peak Hour for Each Approach Begins at:																	
	07:30 AM				07:30 AM				07:45 AM				07:45 AM				
+0 mins.	30	201	41	272	**33**	39	39	111	94	**343**	14	451	114	44	21	179	
+15 mins.	27	**276**	50	**353**	31	54	40	125	**103**	327	**27**	**457**	**150**	61	**41**	252	
+30 mins.	**33**	196	**64**	293	24	58	**45**	127	81	296	15	392	123	**102**	35	**260**	
+45 mins.	27	140	60	227	27	**68**	39	**134**	57	299	12	368	124	44	31	199	
Total Volume	117	813	215	1145	115	219	163	497	335	1265	68	1668	511	251	128	890	
% App. Total	10.2	71	18.8		23.1	44.1	32.8		20.1	75.8	4.1		57.4	28.2	14.4		
PHF	.886	.736	.840	.811	.871	.805	.906	.927	.813	.922	.630	.912	.852	.615	.780	.856	

Counts Unlimited, Inc.
PO Box 1178
Corona, CA 92878
(951) 268-6268

City of Riverside
N/S: La Sierra Avenue
E/W: Indiana Avenue
Weather: Clear

File Name : 03_RIV_La S_Indi PM
Site Code : 05123396
Start Date : 8/15/2023
Page No : 1

Groups Printed- Total Volume

	La Sierra Avenue Southbound					Indiana Avenue Westbound					La Sierra Avenue Northbound					Indiana Avenue Eastbound							
Start Time	Left	Thru	Right	RTOR	App. Total	Left	Thru	Right	RTOR	App. Total	Left	Thru	Right	RTOR	App. Total	Left	Thru	Right	RTOR	App. Total	Exclu. Total	Inclu. Total	Int. Total
04:00 PM	74	331	88	35	493	33	60	30	18	123	42	178	17	13	237	90	76	49	11	215	77	1068	1145
04:15 PM	54	367	84	24	505	33	50	33	25	116	56	183	17	10	256	106	69	53	16	228	75	1105	1180
04:30 PM	67	320	71	20	458	45	47	33	24	125	50	172	11	2	233	80	80	46	13	206	59	1022	1081
04:45 PM	66	374	76	21	516	32	50	40	24	122	36	180	11	4	227	87	60	42	13	189	62	1054	1116
Total	261	1392	319	100	1972	143	207	136	91	486	184	713	56	29	953	363	285	190	53	838	273	4249	4522
05:00 PM	61	389	76	23	526	43	58	47	28	148	42	177	16	7	235	94	70	54	19	218	77	1127	1204
05:15 PM	61	376	76	23	513	25	57	37	32	119	43	191	16	9	250	89	76	60	21	225	85	1107	1192
05:30 PM	74	360	63	13	497	28	49	44	30	121	42	182	12	8	236	97	65	42	10	204	61	1058	1119
05:45 PM	60	351	70	19	481	28	31	26	21	85	40	174	14	10	228	84	63	45	15	192	65	986	1051
Total	256	1476	285	78	2017	124	195	154	111	473	167	724	58	34	949	364	274	201	65	839	288	4278	4566
Grand Total	517	2868	604	178	3989	267	402	290	202	959	351	1437	114	63	1902	727	559	391	118	1677	561	8527	9088
Apprch %	13	71.9	15.1			27.8	41.9	30.2			18.5	75.6	6			43.4	33.3	23.3					
Total %	6.1	33.6	7.1		46.8	3.1	4.7	3.4		11.2	4.1	16.9	1.3		22.3	8.5	6.6	4.6		19.7	6.2	93.8	

	La Sierra Avenue Southbound				Indiana Avenue Westbound				La Sierra Avenue Northbound				Indiana Avenue Eastbound				
Start Time	Left	Thru	Right	App. Total	Left	Thru	Right	App. Total	Left	Thru	Right	App. Total	Left	Thru	Right	App. Total	Int. Total
Peak Hour Analysis From 04:00 PM to 05:45 PM - Peak 1 of 1																	
Peak Hour for Entire Intersection Begins at 04:45 PM																	
04:45 PM	66	374	**76**	516	32	50	40	122	36	180	11	227	87	60	42	189	1054
05:00 PM	61	**389**	76	**526**	**43**	**58**	**47**	**148**	42	177	**16**	235	94	70	54	218	**1127**
05:15 PM	61	376	76	513	25	57	37	119	**43**	**191**	16	**250**	89	**76**	**60**	**225**	1107
05:30 PM	**74**	360	63	497	28	49	44	121	42	182	12	236	**97**	65	42	204	1058
Total Volume	262	1499	291	2052	128	214	168	510	163	730	55	948	367	271	198	836	4346
% App. Total	12.8	73.1	14.2		25.1	42	32.9		17.2	77	5.8		43.9	32.4	23.7		
PHF	.885	.963	.957	.975	.744	.922	.894	.861	.948	.955	.859	.948	.946	.891	.825	.929	.964

Counts Unlimited, Inc.
PO Box 1178
Corona, CA 92878
(951) 268-6268

City of Riverside
N/S: La Sierra Avenue
E/W: Indiana Avenue
Weather: Clear

File Name : 03_RIV_La S_Indi PM
Site Code : 05123396
Start Date : 8/15/2023
Page No : 2

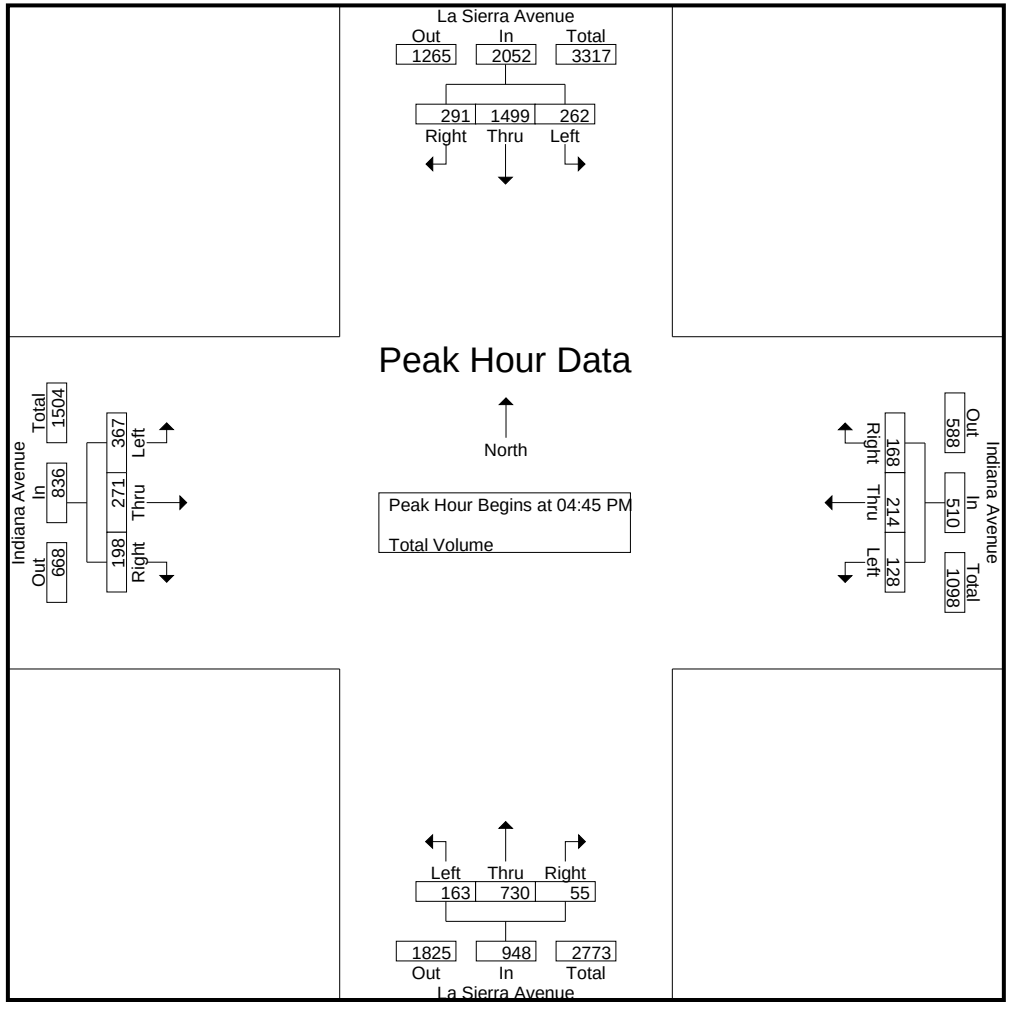

Counts Unlimited, Inc.
PO Box 1178
Corona, CA 92878
(951) 268-6268

City of Riverside
N/S: La Sierra Avenue
E/W: Indiana Avenue
Weather: Clear

File Name : 03_RIV_La S_Indi PM
Site Code : 05123396
Start Date : 8/15/2023
Page No : 3

	La Sierra Avenue Southbound				Indiana Avenue Westbound				La Sierra Avenue Northbound				Indiana Avenue Eastbound				
Start Time	Left	Thru	Right	App. Total	Left	Thru	Right	App. Total	Left	Thru	Right	App. Total	Left	Thru	Right	App. Total	Int. Total
Peak Hour Analysis From 04:00 PM to 05:45 PM - Peak 1 of 1																	
Peak Hour for Each Approach Begins at:																	
	04:45 PM				04:30 PM				04:00 PM				04:15 PM				
+0 mins.	66	374	**76**	516	**45**	47	33	125	42	178	**17**	237	**106**	69	53	**228**	
+15 mins.	61	**389**	76	**526**	32	50	40	122	**56**	**183**	17	**256**	80	**80**	46	206	
+30 mins.	61	376	76	513	43	**58**	**47**	**148**	50	172	11	233	87	60	42	189	
+45 mins.	**74**	360	63	497	25	57	37	119	36	180	11	227	94	70	**54**	218	
Total Volume	262	1499	291	2052	145	212	157	514	184	713	56	953	367	279	195	841	
% App. Total	12.8	73.1	14.2		28.2	41.2	30.5		19.3	74.8	5.9		43.6	33.2	23.2		
PHF	.885	.963	.957	.975	.806	.914	.835	.868	.821	.974	.824	.931	.866	.872	.903	.922	

Location: Riverside
N/S: La Sierra Avenue
E/W: Indiana Avenue

Date: 8/17/2023
Day: Thursday

PEDESTRIANS

	North Leg La Sierra Avenue	East Leg Indiana Avenue	South Leg La Sierra Avenue	West Leg Indiana Avenue	
	Pedestrians	Pedestrians	Pedestrians	Pedestrians	
7:00 AM	0	0	0	0	0
7:15 AM	3	3	3	0	9
7:30 AM	0	1	0	0	1
7:45 AM	2	1	0	1	4
8:00 AM	5	1	1	3	10
8:15 AM	3	1	2	1	7
8:30 AM	2	0	2	1	5
8:45 AM	0	3	1	1	5
TOTAL VOLUMES:	15	10	9	7	41

	North Leg La Sierra Avenue	East Leg Indiana Avenue	South Leg La Sierra Avenue	West Leg Indiana Avenue	
	Pedestrians	Pedestrians	Pedestrians	Pedestrians	
4:00 PM	2	0	2	2	6
4:15 PM	0	1	1	0	2
4:30 PM	2	0	0	1	3
4:45 PM	1	0	0	0	1
5:00 PM	1	0	0	0	1
5:15 PM	0	0	0	0	0
5:30 PM	0	0	0	0	0
5:45 PM	0	0	0	0	0
TOTAL VOLUMES:	6	1	3	3	13

Counts Unlimited, Inc.
PO Box 1178
Corona, CA 92878
951-268-6268

Location: Riverside
N/S: La Sierra Avenue
E/W: Indiana Avenue

Date: 8/17/2023
Day: Thursday

BICYCLES

	Southbound La Sierra Avenue			Westbound Indiana Avenue			Northbound La Sierra Avenue			Eastbound Indiana Avenue			
	Left	Thru	Right	Left	Thru	Right	Left	Thru	Right	Left	Thru	Right	
7:00 AM	0	0	0	0	0	0	0	0	0	0	0	0	0
7:15 AM	0	0	0	0	0	0	1	0	0	0	0	0	1
7:30 AM	1	2	0	0	0	0	0	0	0	0	0	0	3
7:45 AM	0	0	0	0	1	0	0	0	0	0	0	0	1
8:00 AM	0	1	0	0	0	0	0	0	0	0	0	0	1
8:15 AM	0	0	0	0	0	0	0	0	0	0	0	0	0
8:30 AM	0	0	0	0	0	0	0	0	0	0	0	0	0
8:45 AM	0	0	0	0	0	0	0	1	0	0	23	0	24
TOTAL VOLUMES:	1	3	0	0	1	0	1	1	0	0	23	0	30

	Southbound La Sierra Avenue			Westbound Indiana Avenue			Northbound La Sierra Avenue			Eastbound Indiana Avenue			
	Left	Thru	Right	Left	Thru	Right	Left	Thru	Right	Left	Thru	Right	
4:00 PM	0	0	0	0	0	0	0	0	0	0	1	0	1
4:15 PM	0	0	0	0	0	0	0	0	0	0	0	0	0
4:30 PM	0	0	0	1	0	0	0	1	0	0	0	0	2
4:45 PM	0	0	0	0	0	0	0	0	0	0	0	0	0
5:00 PM	0	0	0	1	0	0	0	0	0	0	0	0	1
5:15 PM	0	0	0	0	0	0	0	0	0	0	0	0	0
5:30 PM	0	0	0	0	0	0	0	0	0	0	0	0	0
5:45 PM	0	0	0	0	0	0	0	0	0	0	0	0	0
TOTAL VOLUMES:	0	0	0	2	0	0	0	1	0	0	1	0	4

Counts Unlimited, Inc.
PO Box 1178
Corona, CA 92878
951-268-6268

Counts Unlimited, Inc.
PO Box 1178
Corona, CA 92878
(951) 268-6268

City of Riverside
N/S: La Sierra Avenue
E/W: Victoria Avenue
Weather: Clear

File Name : 04_RIV_La S_Vic AM
Site Code : 05123396
Start Date : 8/15/2023
Page No : 1

Groups Printed- Total Volume

	La Sierra Avenue Southbound					Victoria Avenue Westbound					La Sierra Avenue Northbound					Victoria Avenue Eastbound							
Start Time	Left	Thru	Right	RTOR	App. Total	Left	Thru	Right	RTOR	App. Total	Left	Thru	Right	RTOR	App. Total	Left	Thru	Right	RTOR	App. Total	Exclu. Total	Inclu. Total	Int. Total
07:00 AM	18	104	6	0	128	13	17	28	16	58	3	263	20	8	286	20	5	4	3	29	27	501	528
07:15 AM	14	87	4	2	105	18	12	33	25	63	10	284	42	8	336	19	9	12	8	40	43	544	587
07:30 AM	20	84	5	2	109	22	16	42	15	80	7	237	28	3	272	12	18	13	12	43	32	504	536
07:45 AM	28	129	5	1	162	26	25	53	29	104	13	237	54	3	304	24	16	14	9	54	42	624	666
Total	80	404	20	5	504	79	70	156	85	305	33	1021	144	22	1198	75	48	43	32	166	144	2173	2317
08:00 AM	27	105	11	1	143	26	23	56	18	105	18	233	53	10	304	24	12	11	6	47	35	599	634
08:15 AM	32	104	13	4	149	19	16	40	33	75	11	218	35	3	264	15	17	14	10	46	50	534	584
08:30 AM	22	92	10	3	124	28	20	37	23	85	6	243	33	5	282	11	13	6	5	30	36	521	557
08:45 AM	12	87	3	1	102	17	20	42	18	79	4	199	13	4	216	17	8	3	2	28	25	425	450
Total	93	388	37	9	518	90	79	175	92	344	39	893	134	22	1066	67	50	34	23	151	146	2079	2225
Grand Total	173	792	57	14	1022	169	149	331	177	649	72	1914	278	44	2264	142	98	77	55	317	290	4252	4542
Apprch %	16.9	77.5	5.6			26	23	51			3.2	84.5	12.3			44.8	30.9	24.3					
Total %	4.1	18.6	1.3		24	4	3.5	7.8		15.3	1.7	45	6.5		53.2	3.3	2.3	1.8		7.5	6.4	93.6	

	La Sierra Avenue Southbound				Victoria Avenue Westbound				La Sierra Avenue Northbound				Victoria Avenue Eastbound				
Start Time	Left	Thru	Right	App. Total	Left	Thru	Right	App. Total	Left	Thru	Right	App. Total	Left	Thru	Right	App. Total	Int. Total
Peak Hour Analysis From 07:00 AM to 08:45 AM - Peak 1 of 1																	
Peak Hour for Entire Intersection Begins at 07:45 AM																	
07:45 AM	28	**129**	5	**162**	26	**25**	53	104	13	237	**54**	**304**	**24**	16	**14**	**54**	**624**
08:00 AM	27	105	11	143	26	23	**56**	**105**	**18**	233	53	304	24	12	11	47	599
08:15 AM	**32**	104	**13**	149	19	16	40	75	11	218	35	264	15	**17**	14	46	534
08:30 AM	22	92	10	124	**28**	20	37	85	6	**243**	33	282	11	13	6	30	521
Total Volume	109	430	39	578	99	84	186	369	48	931	175	1154	74	58	45	177	2278
% App. Total	18.9	74.4	6.7		26.8	22.8	50.4		4.2	80.7	15.2		41.8	32.8	25.4		
PHF	.852	.833	.750	.892	.884	.840	.830	.879	.667	.958	.810	.949	.771	.853	.804	.819	.913

Counts Unlimited, Inc.
PO Box 1178
Corona, CA 92878
(951) 268-6268

City of Riverside
N/S: La Sierra Avenue
E/W: Victoria Avenue
Weather: Clear

File Name : 04_RIV_La S_Vic AM
Site Code : 05123396
Start Date : 8/15/2023
Page No : 2

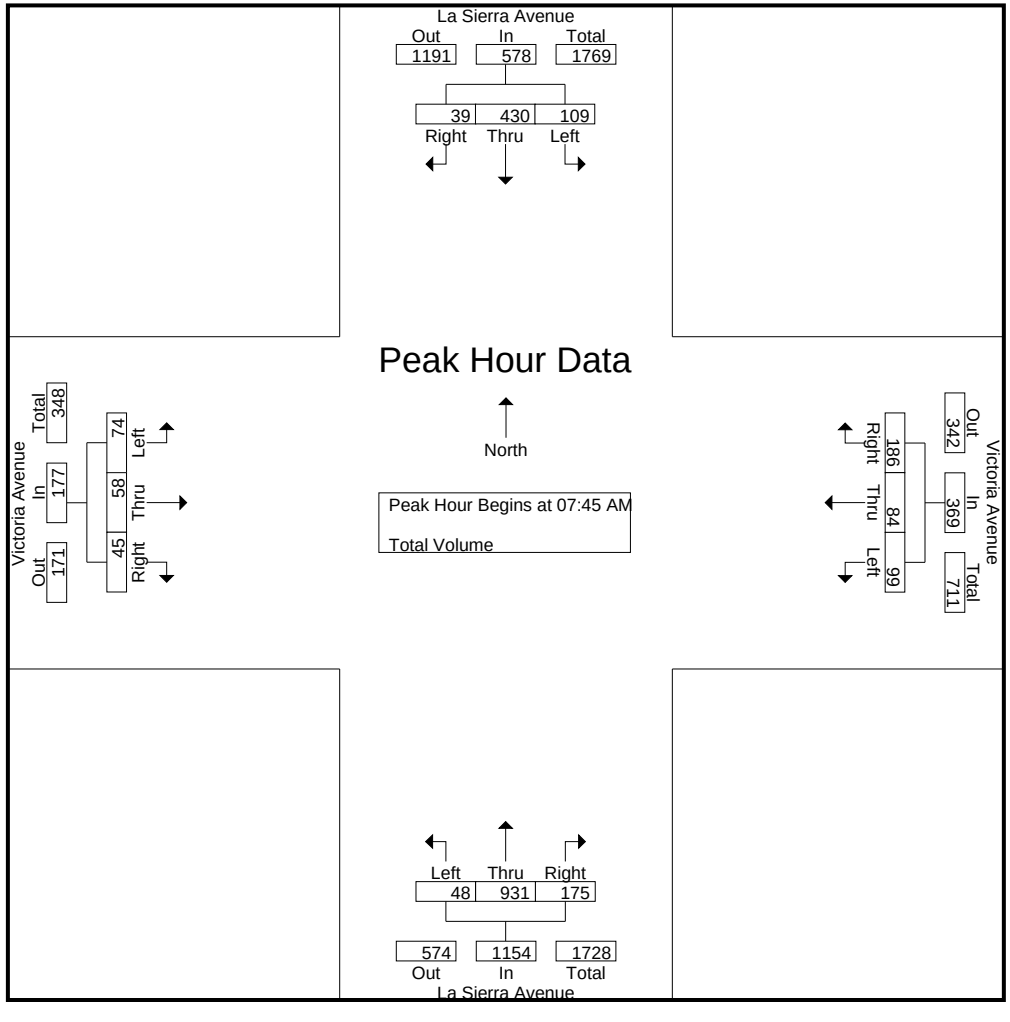

Counts Unlimited, Inc.
PO Box 1178
Corona, CA 92878
(951) 268-6268

City of Riverside
N/S: La Sierra Avenue
E/W: Victoria Avenue
Weather: Clear

File Name : 04_RIV_La S_Vic AM
Site Code : 05123396
Start Date : 8/15/2023

	La Sierra Avenue Southbound				Victoria Avenue Westbound				La Sierra Avenue Northbound				Victoria Avenue Eastbound				
Start Time	Left	Thru	Right	App. Total	Left	Thru	Right	App. Total	Left	Thru	Right	App. Total	Left	Thru	Right	App. Total	Int. Total
Peak Hour Analysis From 07:00 AM to 08:45 AM - Peak 1 of 1																	
Peak Hour for Each Approach Begins at:																	
	07:45 AM				07:45 AM				07:15 AM				07:30 AM				
+0 mins.	28	**129**	5	**162**	26	**25**	53	104	10	**284**	42	**336**	12	**18**	13	43	
+15 mins.	27	105	11	143	26	23	**56**	**105**	7	237	28	272	**24**	16	**14**	**54**	
+30 mins.	**32**	104	**13**	149	19	16	40	75	13	237	**54**	304	24	12	11	47	
+45 mins.	22	92	10	124	**28**	20	37	85	**18**	233	53	304	15	17	14	46	
Total Volume	109	430	39	578	99	84	186	369	48	991	177	1216	75	63	52	190	
% App. Total	18.9	74.4	6.7		26.8	22.8	50.4		3.9	81.5	14.6		39.5	33.2	27.4		
PHF	.852	.833	.750	.892	.884	.840	.830	.879	.667	.872	.819	.905	.781	.875	.929	.880	

Counts Unlimited, Inc.
PO Box 1178
Corona, CA 92878
(951) 268-6268

City of Riverside
N/S: La Sierra Avenue
E/W: Victoria Avenue
Weather: Clear

File Name : 04_RIV_La S_Vic PM
Site Code : 05123396
Start Date : 8/15/2023
Page No : 1

Groups Printed- Total Volume

	La Sierra Avenue Southbound					Victoria Avenue Westbound					La Sierra Avenue Northbound					Victoria Avenue Eastbound							
Start Time	Left	Thru	Right	RTOR	App. Total	Left	Thru	Right	RTOR	App. Total	Left	Thru	Right	RTOR	App. Total	Left	Thru	Right	RTOR	App. Total	Exclu. Total	Inclu. Total	Int. Total
04:00 PM	38	274	19	5	331	56	17	39	20	112	5	161	32	9	198	6	19	29	14	54	48	695	743
04:15 PM	42	330	12	3	384	53	17	31	23	101	5	156	23	3	184	4	20	31	16	55	45	724	769
04:30 PM	29	297	12	0	338	53	12	34	20	99	7	166	36	11	209	11	23	33	13	67	44	713	757
04:45 PM	40	353	6	2	399	58	17	30	22	105	11	163	37	2	211	11	24	27	8	62	34	777	811
Total	149	1254	49	10	1452	220	63	134	85	417	28	646	128	25	802	32	86	120	51	238	171	2909	3080
05:00 PM	43	362	12	3	417	61	16	35	22	112	6	158	22	10	186	13	20	26	14	59	49	774	823
05:15 PM	47	362	12	6	421	61	26	25	15	112	3	178	23	5	204	10	26	40	14	76	40	813	853
05:30 PM	28	305	14	3	347	64	13	27	17	104	11	152	27	10	190	20	24	26	10	70	40	711	751
05:45 PM	38	290	12	4	340	68	15	27	15	110	5	153	28	11	186	10	18	28	9	56	39	692	731
Total	156	1319	50	16	1525	254	70	114	69	438	25	641	100	36	766	53	88	120	47	261	168	2990	3158
Grand Total	305	2573	99	26	2977	474	133	248	154	855	53	1287	228	61	1568	85	174	240	98	499	339	5899	6238
Apprch %	10.2	86.4	3.3			55.4	15.6	29			3.4	82.1	14.5			17	34.9	48.1					
Total %	5.2	43.6	1.7		50.5	8	2.3	4.2		14.5	0.9	21.8	3.9		26.6	1.4	2.9	4.1		8.5	5.4	94.6	

	La Sierra Avenue Southbound				Victoria Avenue Westbound				La Sierra Avenue Northbound				Victoria Avenue Eastbound				
Start Time	Left	Thru	Right	App. Total	Left	Thru	Right	App. Total	Left	Thru	Right	App. Total	Left	Thru	Right	App. Total	Int. Total
Peak Hour Analysis From 04:00 PM to 05:45 PM - Peak 1 of 1																	
Peak Hour for Entire Intersection Begins at 04:30 PM																	
04:30 PM	29	297	**12**	338	53	12	34	99	7	166	36	209	11	23	33	67	713
04:45 PM	40	353	6	399	58	17	30	105	**11**	163	**37**	**211**	11	24	27	62	777
05:00 PM	43	**362**	12	417	**61**	16	**35**	**112**	6	158	22	186	**13**	20	26	59	774
05:15 PM	**47**	362	12	**421**	61	**26**	25	112	3	**178**	23	204	10	**26**	**40**	**76**	**813**
Total Volume	159	1374	42	1575	233	71	124	428	27	665	118	810	45	93	126	264	3077
% App. Total	10.1	87.2	2.7		54.4	16.6	29		3.3	82.1	14.6		17	35.2	47.7		
PHF	.846	.949	.875	.935	.955	.683	.886	.955	.614	.934	.797	.960	.865	.894	.788	.868	.946

Counts Unlimited, Inc.
PO Box 1178
Corona, CA 92878
(951) 268-6268

City of Riverside
N/S: La Sierra Avenue
E/W: Victoria Avenue
Weather: Clear

File Name : 04_RIV_La S_Vic PM
Site Code : 05123396
Start Date : 8/15/2023
Page No : 2

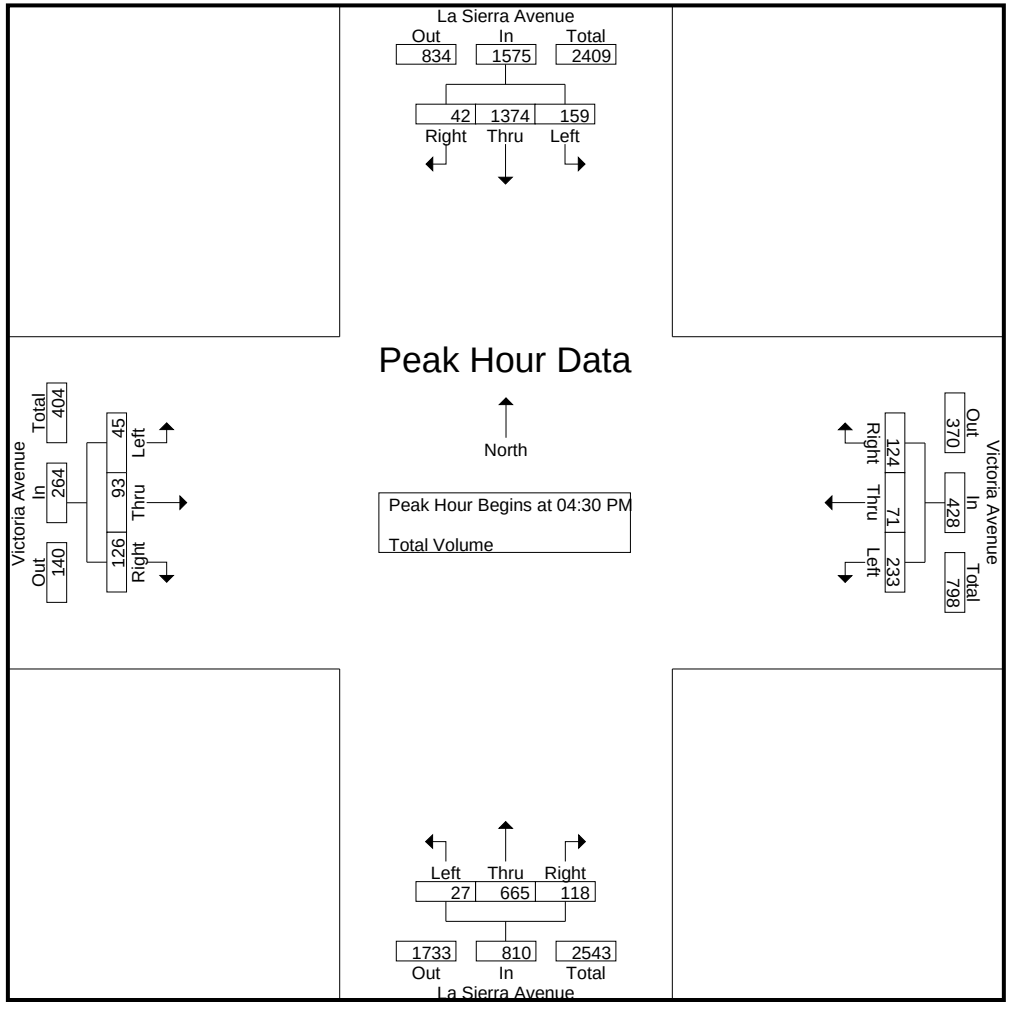

Counts Unlimited, Inc.
PO Box 1178
Corona, CA 92878
(951) 268-6268

City of Riverside
N/S: La Sierra Avenue
E/W: Victoria Avenue
Weather: Clear

File Name : 04_RIV_La S_Vic PM
Site Code : 05123396
Start Date : 8/15/2023

	La Sierra Avenue Southbound				Victoria Avenue Westbound				La Sierra Avenue Northbound				Victoria Avenue Eastbound				
Start Time	Left	Thru	Right	App. Total	Left	Thru	Right	App. Total	Left	Thru	Right	App. Total	Left	Thru	Right	App. Total	Int. Total
Peak Hour Analysis From 04:00 PM to 05:45 PM - Peak 1 of 1																	
Peak Hour for Each Approach Begins at:																	
	04:45 PM				05:00 PM				04:30 PM				04:45 PM				
+0 mins.	40	353	6	399	61	16	**35**	**112**	7	166	36	209	11	24	27	62	
+15 mins.	43	**362**	12	417	61	**26**	25	112	**11**	163	**37**	**211**	13	20	26	59	
+30 mins.	**47**	362	12	**421**	64	13	27	104	6	158	22	186	10	**26**	**40**	**76**	
+45 mins.	28	305	**14**	347	**68**	15	27	110	3	**178**	23	204	**20**	24	26	70	
Total Volume	158	1382	44	1584	254	70	114	438	27	665	118	810	54	94	119	267	
% App. Total	10	87.2	2.8		58	16	26		3.3	82.1	14.6		20.2	35.2	44.6		
PHF	.840	.954	.786	.941	.934	.673	.814	.978	.614	.934	.797	.960	.675	.904	.744	.878	

Location: Riverside
N/S: La Sierra Avenue
E/W: Victoria Avenue

Date: 8/17/2023
Day: Thursday

PEDESTRIANS

	North Leg La Sierra Avenue	East Leg Victoria Avenue	South Leg La Sierra Avenue	West Leg Victoria Avenue	
	Pedestrians	Pedestrians	Pedestrians	Pedestrians	
7:00 AM	1	1	0	0	2
7:15 AM	0	0	0	0	0
7:30 AM	0	0	0	0	0
7:45 AM	0	1	0	0	1
8:00 AM	2	0	0	0	2
8:15 AM	0	0	1	0	1
8:30 AM	2	0	0	0	2
8:45 AM	0	0	0	1	1
TOTAL VOLUMES:	5	2	1	1	9

	North Leg La Sierra Avenue	East Leg Victoria Avenue	South Leg La Sierra Avenue	West Leg Victoria Avenue	
	Pedestrians	Pedestrians	Pedestrians	Pedestrians	
4:00 PM	0	0	0	0	0
4:15 PM	0	1	0	0	1
4:30 PM	0	0	0	0	0
4:45 PM	0	0	0	0	0
5:00 PM	0	0	0	0	0
5:15 PM	0	0	0	0	0
5:30 PM	0	0	0	0	0
5:45 PM	2	0	0	0	2
TOTAL VOLUMES:	2	1	0	0	3

Counts Unlimited, Inc.
PO Box 1178
Corona, CA 92878
951-268-6268

Location: Riverside
N/S: La Sierra Avenue
E/W: Victoria Avenue

Date: 8/17/2023
Day: Thursday

BICYCLES

	Southbound La Sierra Avenue			Westbound Victoria Avenue			Northbound La Sierra Avenue			Eastbound Victoria Avenue			
	Left	Thru	Right	Left	Thru	Right	Left	Thru	Right	Left	Thru	Right	
7:00 AM	0	0	0	0	0	0	0	0	0	0	1	0	1
7:15 AM	0	0	0	0	0	0	0	0	0	0	0	0	0
7:30 AM	0	0	0	0	1	0	0	0	0	0	1	0	2
7:45 AM	0	0	0	0	2	0	0	0	0	0	2	0	4
8:00 AM	0	0	0	0	0	0	0	0	0	0	0	0	0
8:15 AM	0	0	0	0	0	0	0	0	0	0	0	0	0
8:30 AM	0	0	0	0	0	1	0	0	0	0	0	0	1
8:45 AM	0	0	1	0	0	0	0	0	0	0	0	0	1
TOTAL VOLUMES:	0	0	1	0	3	1	0	0	0	0	4	0	9

	Southbound La Sierra Avenue			Westbound Victoria Avenue			Northbound La Sierra Avenue			Eastbound Victoria Avenue			
	Left	Thru	Right	Left	Thru	Right	Left	Thru	Right	Left	Thru	Right	
4:00 PM	0	0	0	0	0	0	0	0	0	0	0	0	0
4:15 PM	0	0	0	0	0	0	0	0	0	0	0	0	0
4:30 PM	0	0	0	0	1	0	0	0	0	0	0	0	1
4:45 PM	0	0	0	0	0	0	0	0	0	0	1	0	1
5:00 PM	0	0	0	0	0	0	0	0	0	0	2	0	2
5:15 PM	0	0	0	0	0	0	0	0	0	0	0	0	0
5:30 PM	0	0	0	0	0	0	0	0	0	0	0	1	1
5:45 PM	0	0	0	0	0	0	0	0	0	0	1	0	1
TOTAL VOLUMES:	0	0	0	0	1	0	0	0	0	0	4	1	6

Counts Unlimited, Inc.
PO Box 1178
Corona, CA 92878
951-268-6268

Counts Unlimited, Inc.
PO Box 1178
Corona, CA 92878
(951) 268-6268

City of Riverside
N/S: La Sierra Avenue
E/W: McAllister Parkway
Weather: Clear

File Name : 05_RIV_La S_McA AM
Site Code : 05123396
Start Date : 8/15/2023
Page No : 1

Groups Printed- Total Volume

	La Sierra Avenue Southbound			McAllister Parkway Westbound				La Sierra Avenue Northbound						
Start Time	Left	Thru	App. Total	Left	Right	RTOR	App. Total	Thru	Right	RTOR	App. Total	Exclu. Total	Inclu. Total	Int. Total
07:00 AM	24	95	119	3	47	39	50	226	1	0	227	39	396	435
07:15 AM	16	105	121	2	60	48	62	251	4	2	255	50	438	488
07:30 AM	23	97	120	4	52	42	56	211	2	0	213	42	389	431
07:45 AM	21	150	171	6	57	40	63	274	8	0	282	40	516	556
Total	84	447	531	15	216	169	231	962	15	2	977	171	1739	1910
08:00 AM	24	124	148	11	37	30	48	269	8	1	277	31	473	504
08:15 AM	26	109	135	2	43	34	45	195	4	1	199	35	379	414
08:30 AM	23	109	132	4	43	36	47	233	0	0	233	36	412	448
08:45 AM	24	85	109	1	39	27	40	234	0	0	234	27	383	410
Total	97	427	524	18	162	127	180	931	12	2	943	129	1647	1776
Grand Total	181	874	1055	33	378	296	411	1893	27	4	1920	300	3386	3686
Apprch %	17.2	82.8		8	92			98.6	1.4					
Total %	5.3	25.8	31.2	1	11.2		12.1	55.9	0.8		56.7	8.1	91.9	

	La Sierra Avenue Southbound			McAllister Parkway Westbound			La Sierra Avenue Northbound			
Start Time	Left	Thru	App. Total	Left	Right	App. Total	Thru	Right	App. Total	Int. Total
Peak Hour Analysis From 07:00 AM to 08:45 AM - Peak 1 of 1										
Peak Hour for Entire Intersection Begins at 07:15 AM										
07:15 AM	16	105	121	2	**60**	62	251	4	255	438
07:30 AM	23	97	120	4	52	56	211	2	213	389
07:45 AM	21	**150**	**171**	6	57	**63**	**274**	**8**	**282**	**516**
08:00 AM	**24**	124	148	**11**	37	48	269	8	277	473
Total Volume	84	476	560	23	206	229	1005	22	1027	1816
% App. Total	15	85		10	90		97.9	2.1		
PHF	.875	.793	.819	.523	.858	.909	.917	.688	.910	.880

Counts Unlimited, Inc.
PO Box 1178
Corona, CA 92878
(951) 268-6268

City of Riverside
N/S: La Sierra Avenue
E/W: McAllister Parkway
Weather: Clear

File Name : 05_RIV_La S_McA AM
Site Code : 05123396
Start Date : 8/15/2023
Page No : 2

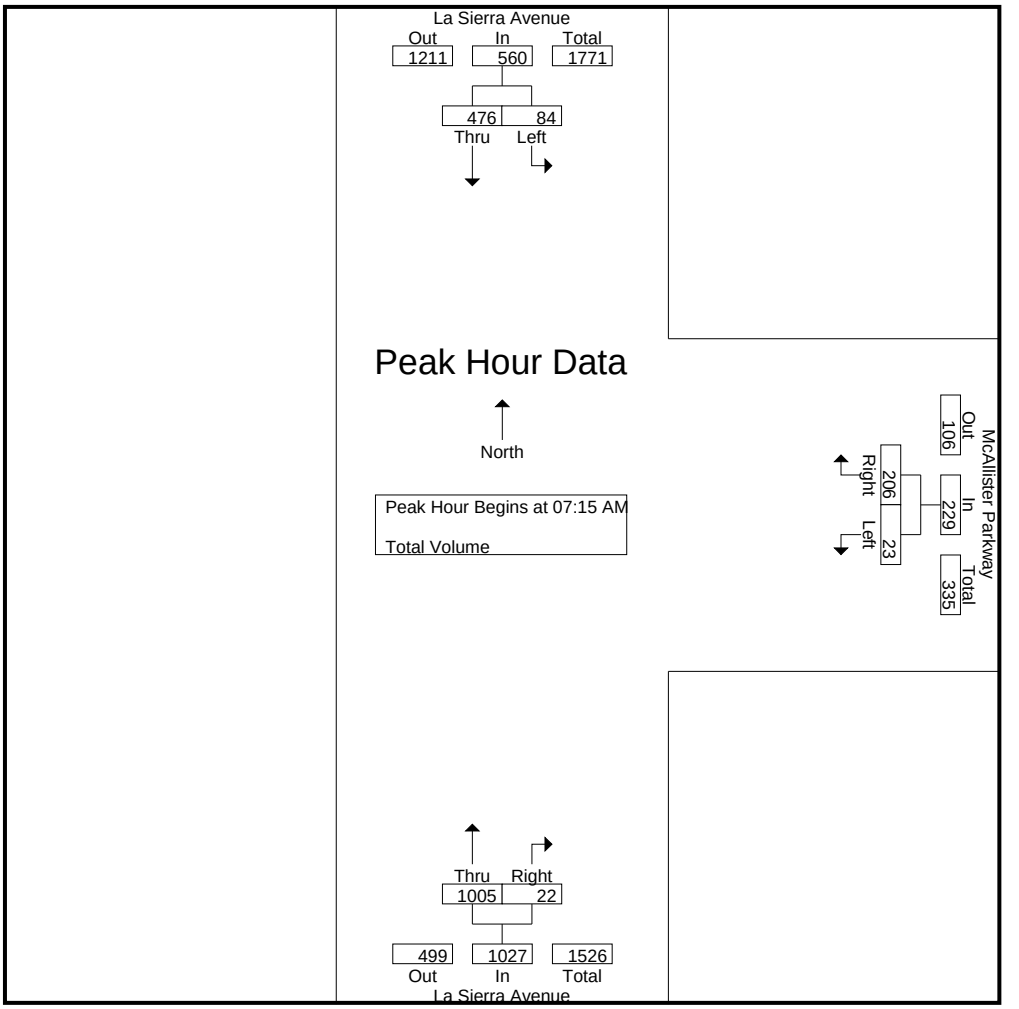

Peak Hour Analysis From 07:00 AM to 08:45 AM - Peak 1 of 1
Peak Hour for Each Approach Begins at:

	07:45 AM			07:00 AM			07:15 AM		
+0 mins.	21	**150**	**171**	3	47	50	251	4	255
+15 mins.	24	124	148	2	**60**	62	211	2	213
+30 mins.	**26**	109	135	4	52	56	**274**	**8**	**282**
+45 mins.	23	109	132	**6**	57	**63**	269	8	277
Total Volume	94	492	586	15	216	231	1005	22	1027
% App. Total	16	84		6.5	93.5		97.9	2.1	
PHF	.904	.820	.857	.625	.900	.917	.917	.688	.910

Counts Unlimited, Inc.
PO Box 1178
Corona, CA 92878
(951) 268-6268

City of Riverside
N/S: La Sierra Avenue
E/W: McAllister Parkway
Weather: Clear

File Name : 05_RIV_La S_McA PM
Site Code : 05123396
Start Date : 8/15/2023
Page No : 1

Groups Printed- Total Volume

	La Sierra Avenue Southbound			McAllister Parkway Westbound				La Sierra Avenue Northbound						
Start Time	Left	Thru	App. Total	Left	Right	RTOR	App. Total	Thru	Right	RTOR	App. Total	Exclu. Total	Inclu. Total	Int. Total
04:00 PM	59	316	375	1	36	35	37	191	3	0	194	35	606	641
04:15 PM	55	364	419	8	34	28	42	125	3	1	128	29	589	618
04:30 PM	44	369	413	3	42	38	45	192	3	0	195	38	653	691
04:45 PM	59	365	424	4	40	34	44	164	0	0	164	34	632	666
Total	217	1414	1631	16	152	135	168	672	9	1	681	136	2480	2616
05:00 PM	64	383	447	8	36	32	44	156	2	0	158	32	649	681
05:15 PM	65	409	474	2	37	34	39	154	6	0	160	34	673	707
05:30 PM	73	342	415	2	36	33	38	163	3	0	166	33	619	652
05:45 PM	58	339	397	7	38	34	45	138	2	0	140	34	582	616
Total	260	1473	1733	19	147	133	166	611	13	0	624	133	2523	2656
Grand Total	477	2887	3364	35	299	268	334	1283	22	1	1305	269	5003	5272
Apprch %	14.2	85.8		10.5	89.5			98.3	1.7					
Total %	9.5	57.7	67.2	0.7	6		6.7	25.6	0.4		26.1	5.1	94.9	

	La Sierra Avenue Southbound			McAllister Parkway Westbound			La Sierra Avenue Northbound			
Start Time	Left	Thru	App. Total	Left	Right	App. Total	Thru	Right	App. Total	Int. Total
Peak Hour Analysis From 04:00 PM to 05:45 PM - Peak 1 of 1										
Peak Hour for Entire Intersection Begins at 04:30 PM										
04:30 PM	44	369	413	3	**42**	**45**	**192**	3	**195**	653
04:45 PM	59	365	424	4	40	44	164	0	164	632
05:00 PM	64	383	447	**8**	36	44	156	2	158	649
05:15 PM	**65**	**409**	**474**	2	37	39	154	**6**	160	**673**
Total Volume	232	1526	1758	17	155	172	666	11	677	2607
% App. Total	13.2	86.8		9.9	90.1		98.4	1.6		
PHF	.892	.933	.927	.531	.923	.956	.867	.458	.868	.968

Counts Unlimited, Inc.
PO Box 1178
Corona, CA 92878
(951) 268-6268

City of Riverside
N/S: La Sierra Avenue
E/W: McAllister Parkway
Weather: Clear

File Name : 05_RIV_La S_McA PM
Site Code : 05123396
Start Date : 8/15/2023
Page No : 2

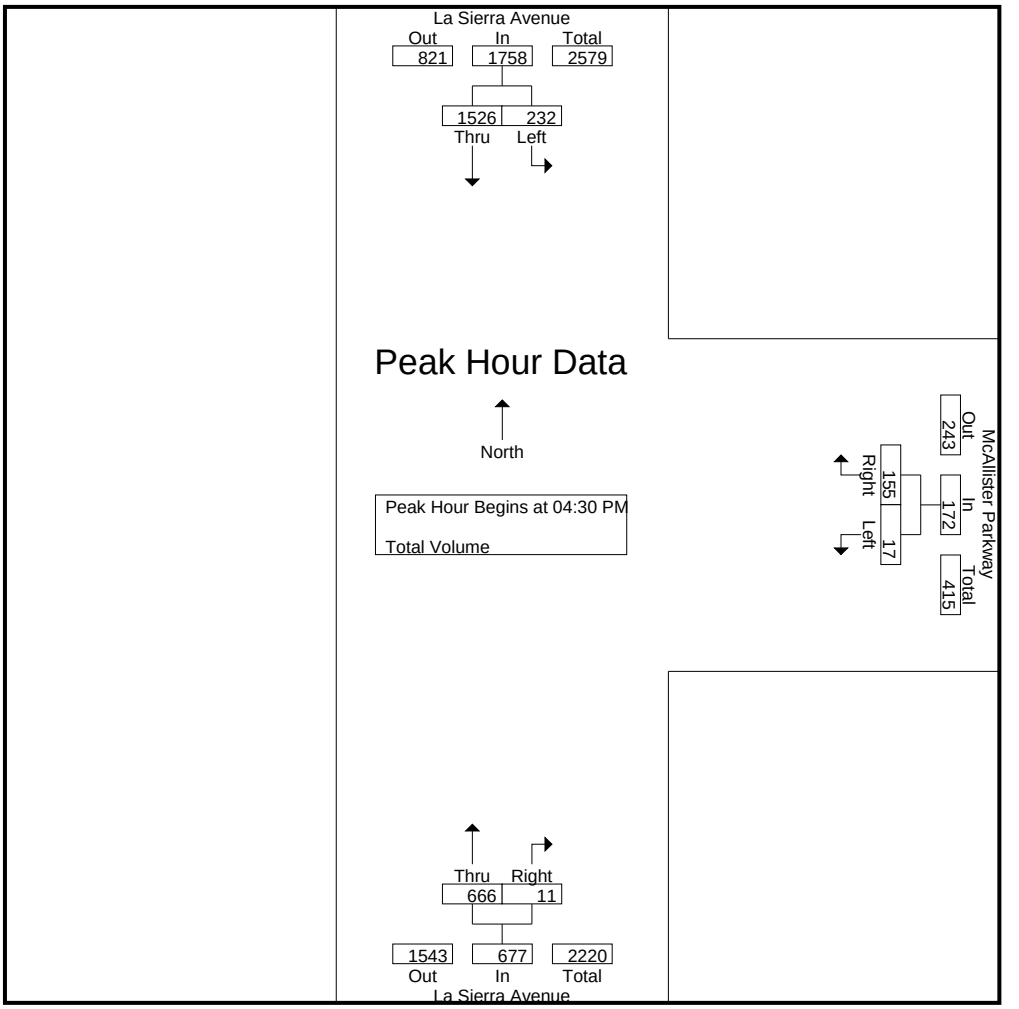

Peak Hour Analysis From 04:00 PM to 05:45 PM - Peak 1 of 1
Peak Hour for Each Approach Begins at:

	04:45 PM			04:15 PM			04:00 PM		
+0 mins.	59	365	424	**8**	34	42	191	**3**	194
+15 mins.	64	383	447	3	**42**	**45**	125	3	128
+30 mins.	65	**409**	**474**	4	40	44	**192**	3	**195**
+45 mins.	**73**	342	415	8	36	44	164	0	164
Total Volume	261	1499	1760	23	152	175	672	9	681
% App. Total	14.8	85.2		13.1	86.9		98.7	1.3	
PHF	.894	.916	.928	.719	.905	.972	.875	.750	.873

Location: Riverside
N/S: La Sierra Avenue
E/W: McAllister Parkway

Date: 8/17/2023
Day: Thursday

PEDESTRIANS

	North Leg La Sierra Avenue	East Leg McAllister Parkway	South Leg La Sierra Avenue	West Leg McAllister Parkway	
	Pedestrians	Pedestrians	Pedestrians	Pedestrians	
7:00 AM	0	0	0	0	0
7:15 AM	0	2	0	0	2
7:30 AM	0	1	0	0	1
7:45 AM	0	0	0	0	0
8:00 AM	0	0	0	0	0
8:15 AM	0	0	0	0	0
8:30 AM	0	0	0	0	0
8:45 AM	0	0	0	0	0
TOTAL VOLUMES:	0	3	0	0	3

	North Leg La Sierra Avenue	East Leg McAllister Parkway	South Leg La Sierra Avenue	West Leg McAllister Parkway	
	Pedestrians	Pedestrians	Pedestrians	Pedestrians	
4:00 PM	0	0	0	0	0
4:15 PM	0	0	0	0	0
4:30 PM	0	0	0	0	0
4:45 PM	0	0	0	0	0
5:00 PM	0	0	0	0	0
5:15 PM	0	0	0	0	0
5:30 PM	0	0	0	0	0
5:45 PM	0	0	0	0	0
TOTAL VOLUMES:	0	0	0	0	0

Counts Unlimited, Inc.
PO Box 1178
Corona, CA 92878
951-268-6268

Location: Riverside
N/S: La Sierra Avenue
E/W: McAllister Parkway

Date: 8/17/2023
Day: Thursday

BICYCLES

	Southbound La Sierra Avenue			Westbound McAllister Parkway			Northbound La Sierra Avenue			Eastbound McAllister Parkway			
	Left	Thru	Right	Left	Thru	Right	Left	Thru	Right	Left	Thru	Right	
7:00 AM	0	0	0	0	0	0	0	0	0	0	0	0	0
7:15 AM	0	0	0	0	0	0	0	0	0	0	0	0	0
7:30 AM	0	0	0	0	0	0	0	0	0	0	0	0	0
7:45 AM	0	0	0	0	0	0	0	0	0	0	0	0	0
8:00 AM	0	0	0	0	0	0	0	1	0	0	0	0	1
8:15 AM	0	0	0	0	0	0	0	0	0	0	0	0	0
8:30 AM	0	0	0	0	0	0	0	0	0	0	0	0	0
8:45 AM	0	0	0	0	0	0	0	0	0	0	0	0	0
TOTAL VOLUMES:	0	0	0	0	0	0	0	1	0	0	0	0	1

	Southbound La Sierra Avenue			Westbound McAllister Parkway			Northbound La Sierra Avenue			Eastbound McAllister Parkway			
	Left	Thru	Right	Left	Thru	Right	Left	Thru	Right	Left	Thru	Right	
4:00 PM	0	0	0	0	0	0	0	0	0	0	0	0	0
4:15 PM	0	0	0	0	0	0	0	0	0	0	0	0	0
4:30 PM	0	0	0	0	0	0	0	0	0	0	0	0	0
4:45 PM	0	0	0	0	0	0	0	0	0	0	0	0	0
5:00 PM	0	0	0	0	0	0	0	0	0	0	0	0	0
5:15 PM	0	0	0	0	0	0	0	0	0	0	0	0	0
5:30 PM	0	1	0	0	0	0	0	0	0	0	0	0	1
5:45 PM	0	0	0	0	0	0	0	0	0	0	0	0	0
TOTAL VOLUMES:	0	1	0	0	0	0	0	0	0	0	0	0	1

Counts Unlimited, Inc.
PO Box 1178
Corona, CA 92878
951-268-6268

Counts Unlimited, Inc.
PO Box 1178
Corona, CA 92878
(951) 268-6268

City of Riverside
N/S: La Sierra Avenue
E/W: El Sobrante Road
Weather: Clear

File Name : 06_RIV_La S_El S AM
Site Code : 05123396
Start Date : 8/15/2023
Page No : 1

Groups Printed- Total Volume

	La Sierra Avenue Southbound			El Sobrante Road Westbound			La Sierra Avenue Northbound			
Start Time	Left	Thru	App. Total	Left	Right	App. Total	Thru	Right	App. Total	Int. Total
07:00 AM	54	31	85	18	112	130	22	5	27	242
07:15 AM	47	25	72	21	100	121	17	7	24	217
07:30 AM	36	32	68	19	104	123	23	8	31	222
07:45 AM	69	29	98	12	144	156	14	7	21	275
Total	206	117	323	70	460	530	76	27	103	956
08:00 AM	54	32	86	15	103	118	36	6	42	246
08:15 AM	52	29	81	14	83	97	23	7	30	208
08:30 AM	44	22	66	18	125	143	23	4	27	236
08:45 AM	39	32	71	8	131	139	17	9	26	236
Total	189	115	304	55	442	497	99	26	125	926
Grand Total	395	232	627	125	902	1027	175	53	228	1882
Apprch %	63	37		12.2	87.8		76.8	23.2		
Total %	21	12.3	33.3	6.6	47.9	54.6	9.3	2.8	12.1	

	La Sierra Avenue Southbound			El Sobrante Road Westbound			La Sierra Avenue Northbound			
Start Time	Left	Thru	App. Total	Left	Right	App. Total	Thru	Right	App. Total	Int. Total
Peak Hour Analysis From 07:00 AM to 08:45 AM - Peak 1 of 1										
Peak Hour for Entire Intersection Begins at 07:45 AM										
07:45 AM	**69**	29	**98**	12	**144**	**156**	14	**7**	21	**275**
08:00 AM	54	**32**	86	15	103	118	**36**	6	**42**	246
08:15 AM	52	29	81	14	83	97	23	7	30	208
08:30 AM	44	22	66	**18**	125	143	23	4	27	236
Total Volume	219	112	331	59	455	514	96	24	120	965
% App. Total	66.2	33.8		11.5	88.5		80	20		
PHF	.793	.875	.844	.819	.790	.824	.667	.857	.714	.877

Counts Unlimited, Inc.
PO Box 1178
Corona, CA 92878
(951) 268-6268

City of Riverside
N/S: La Sierra Avenue
E/W: El Sobrante Road
Weather: Clear

File Name : 06_RIV_La S_El S AM
Site Code : 05123396
Start Date : 8/15/2023
Page No : 2

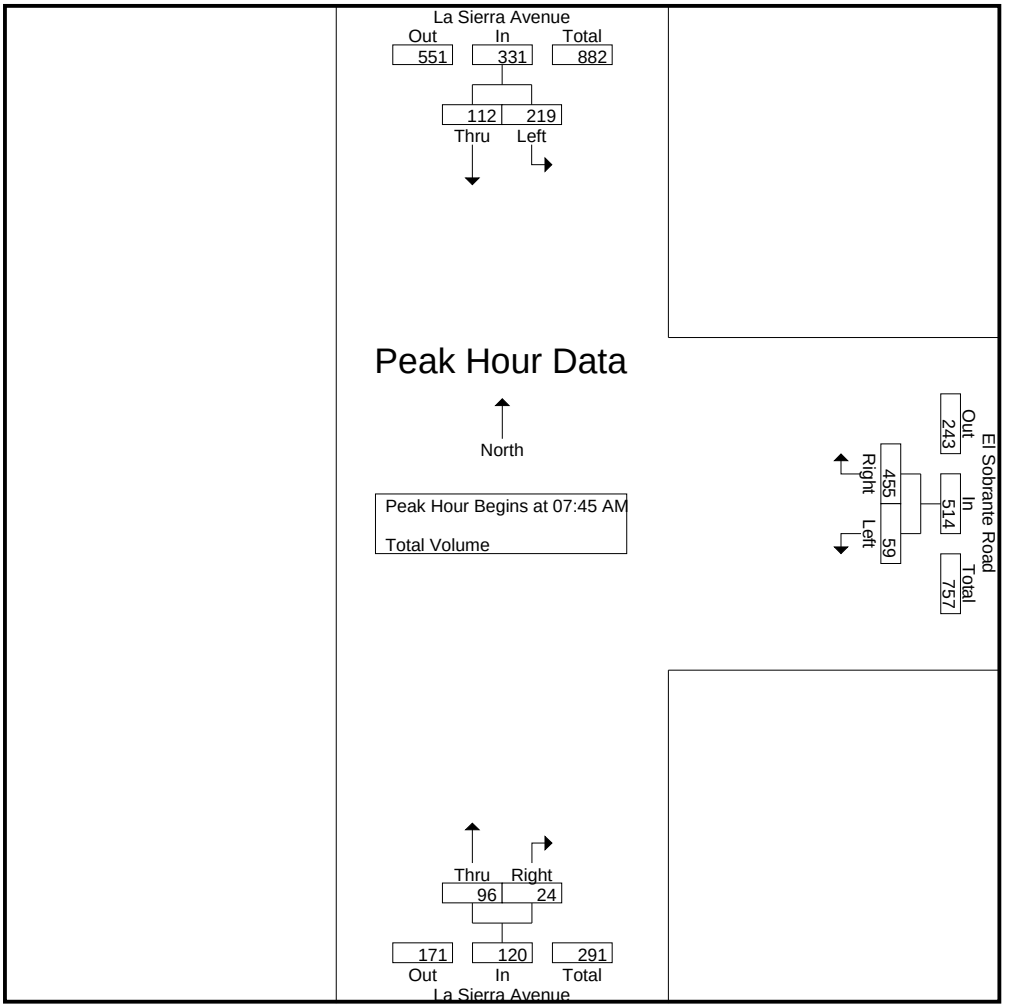

Peak Hour Analysis From 07:00 AM to 08:45 AM - Peak 1 of 1
Peak Hour for Each Approach Begins at:

	07:30 AM			07:00 AM			08:00 AM		
+0 mins.	36	**32**	68	18	112	130	**36**	6	**42**
+15 mins.	**69**	29	**98**	**21**	100	121	23	7	30
+30 mins.	54	32	86	19	104	123	23	4	27
+45 mins.	52	29	81	12	**144**	**156**	17	**9**	26
Total Volume	211	122	333	70	460	530	99	26	125
% App. Total	63.4	36.6		13.2	86.8		79.2	20.8	
PHF	.764	.953	.849	.833	.799	.849	.688	.722	.744

Counts Unlimited, Inc.
PO Box 1178
Corona, CA 92878
(951) 268-6268

City of Riverside
N/S: La Sierra Avenue
E/W: El Sobrante Road
Weather: Clear

File Name : 06_RIV_La S_El S PM
Site Code : 05123396
Start Date : 8/15/2023
Page No : 1

Groups Printed- Total Volume

	La Sierra Avenue Southbound			El Sobrante Road Westbound			La Sierra Avenue Northbound			
Start Time	Left	Thru	App. Total	Left	Right	App. Total	Thru	Right	App. Total	Int. Total
04:00 PM	150	94	244	9	84	93	43	20	63	400
04:15 PM	159	108	267	7	71	78	54	15	69	414
04:30 PM	163	102	265	11	86	97	42	10	52	414
04:45 PM	170	132	302	9	66	75	64	19	83	460
Total	642	436	1078	36	307	343	203	64	267	1688
05:00 PM	157	127	284	8	68	76	41	18	59	419
05:15 PM	167	124	291	12	53	65	40	12	52	408
05:30 PM	147	109	256	11	77	88	55	15	70	414
05:45 PM	139	77	216	8	66	74	38	11	49	339
Total	610	437	1047	39	264	303	174	56	230	1580
Grand Total	1252	873	2125	75	571	646	377	120	497	3268
Apprch %	58.9	41.1		11.6	88.4		75.9	24.1		
Total %	38.3	26.7	65	2.3	17.5	19.8	11.5	3.7	15.2	

	La Sierra Avenue Southbound			El Sobrante Road Westbound			La Sierra Avenue Northbound			
Start Time	Left	Thru	App. Total	Left	Right	App. Total	Thru	Right	App. Total	Int. Total
Peak Hour Analysis From 04:00 PM to 05:45 PM - Peak 1 of 1										
Peak Hour for Entire Intersection Begins at 04:15 PM										
04:15 PM	159	108	267	7	71	78	54	15	69	414
04:30 PM	163	102	265	**11**	**86**	**97**	42	10	52	414
04:45 PM	**170**	**132**	**302**	9	66	75	**64**	**19**	**83**	**460**
05:00 PM	157	127	284	8	68	76	41	18	59	419
Total Volume	649	469	1118	35	291	326	201	62	263	1707
% App. Total	58.1	41.9		10.7	89.3		76.4	23.6		
PHF	.954	.888	.925	.795	.846	.840	.785	.816	.792	.928

Counts Unlimited, Inc.
PO Box 1178
Corona, CA 92878
(951) 268-6268

City of Riverside
N/S: La Sierra Avenue
E/W: El Sobrante Road
Weather: Clear

File Name : 06_RIV_La S_El S PM
Site Code : 05123396
Start Date : 8/15/2023
Page No : 2

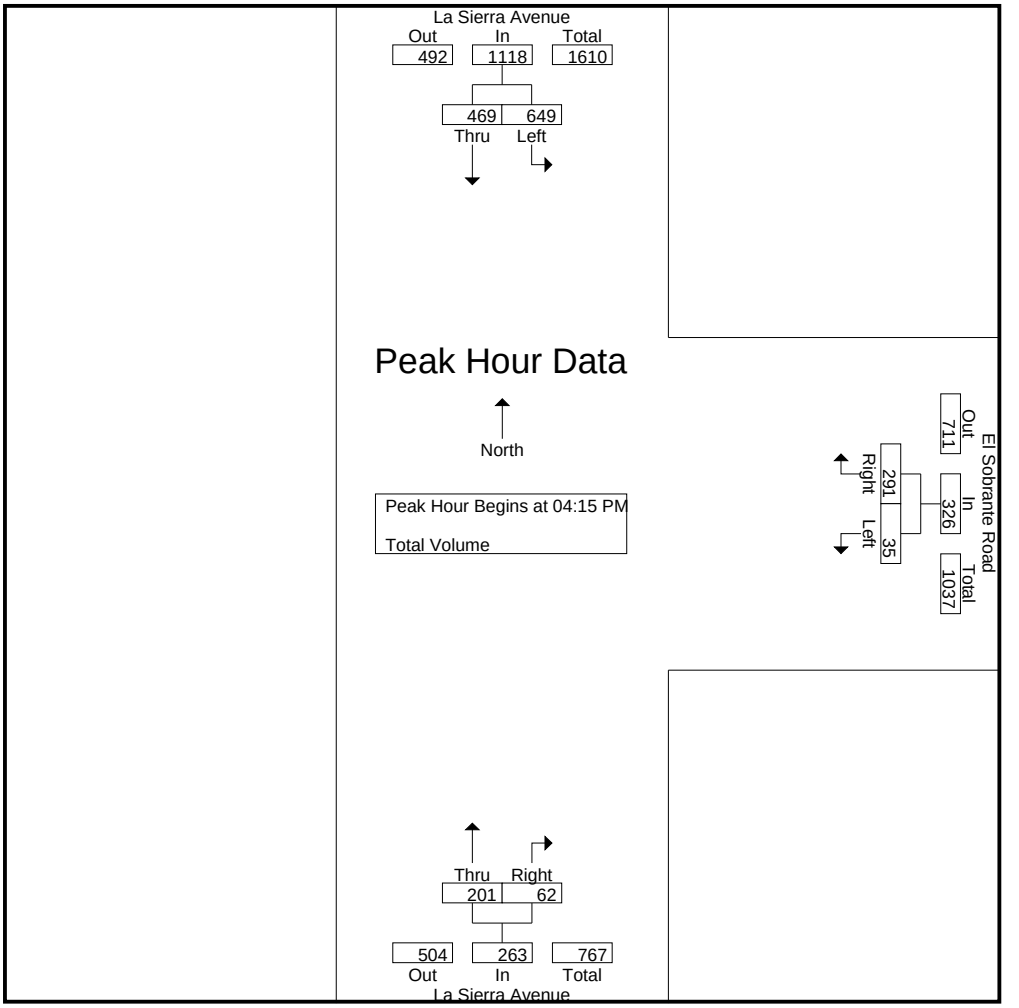

Peak Hour Analysis From 04:00 PM to 05:45 PM - Peak 1 of 1
Peak Hour for Each Approach Begins at:

	04:30 PM			04:00 PM			04:00 PM		
+0 mins.	163	102	265	9	84	93	43	**20**	63
+15 mins.	**170**	**132**	**302**	7	71	78	54	15	69
+30 mins.	157	127	284	**11**	**86**	**97**	42	10	52
+45 mins.	167	124	291	9	66	75	**64**	19	**83**
Total Volume	657	485	1142	36	307	343	203	64	267
% App. Total	57.5	42.5		10.5	89.5		76	24	
PHF	.966	.919	.945	.818	.892	.884	.793	.800	.804

Location: Riverside
N/S: La Sierra Avenue
E/W: El Sobrante Road

Date: 8/17/2023
Day: Thursday

PEDESTRIANS

	North Leg La Sierra Avenue	East Leg El Sobrante Road	South Leg La Sierra Avenue	West Leg El Sobrante Road	
	Pedestrians	Pedestrians	Pedestrians	Pedestrians	
7:00 AM	0	0	0	0	0
7:15 AM	0	0	0	0	0
7:30 AM	0	0	0	0	0
7:45 AM	0	0	0	0	0
8:00 AM	0	0	0	0	0
8:15 AM	0	0	0	0	0
8:30 AM	0	0	0	0	0
8:45 AM	0	0	0	0	0
TOTAL VOLUMES:	0	0	0	0	0

	North Leg La Sierra Avenue	East Leg El Sobrante Road	South Leg La Sierra Avenue	West Leg El Sobrante Road	
	Pedestrians	Pedestrians	Pedestrians	Pedestrians	
4:00 PM	0	0	0	0	0
4:15 PM	0	0	0	0	0
4:30 PM	0	0	0	0	0
4:45 PM	0	0	0	0	0
5:00 PM	0	0	0	0	0
5:15 PM	0	0	0	0	0
5:30 PM	0	0	0	0	0
5:45 PM	0	0	0	0	0
TOTAL VOLUMES:	0	0	0	0	0

Counts Unlimited, Inc.
PO Box 1178
Corona, CA 92878
951-268-6268

Location: Riverside
N/S: La Sierra Avenue
E/W: El Sobrante Road

Date: 8/17/2023
Day: Thursday

BICYCLES

	Southbound La Sierra Avenue			Westbound El Sobrante Road			Northbound La Sierra Avenue			Eastbound El Sobrante Road			
	Left	Thru	Right	Left	Thru	Right	Left	Thru	Right	Left	Thru	Right	
7:00 AM	0	0	0	0	0	0	0	0	0	0	0	0	0
7:15 AM	0	0	0	0	0	0	0	0	0	0	0	0	0
7:30 AM	0	0	0	0	0	0	0	0	0	0	0	0	0
7:45 AM	0	0	0	0	0	0	0	0	0	0	0	0	0
8:00 AM	0	0	0	0	0	0	0	0	0	0	0	0	0
8:15 AM	0	0	0	0	0	0	0	0	0	0	0	0	0
8:30 AM	0	0	0	0	0	0	0	0	0	0	0	0	0
8:45 AM	0	0	0	0	0	0	0	0	0	0	0	0	0
TOTAL VOLUMES:	0	0	0	0	0	0	0	0	0	0	0	0	0

	Southbound La Sierra Avenue			Westbound El Sobrante Road			Northbound La Sierra Avenue			Eastbound El Sobrante Road			
	Left	Thru	Right	Left	Thru	Right	Left	Thru	Right	Left	Thru	Right	
4:00 PM	0	0	0	0	0	0	0	0	0	0	0	0	0
4:15 PM	0	0	0	0	0	0	0	0	0	0	0	0	0
4:30 PM	0	0	0	0	0	0	0	0	0	0	0	0	0
4:45 PM	0	0	0	0	0	0	0	0	0	0	0	0	0
5:00 PM	0	0	0	0	0	0	0	0	0	0	0	0	0
5:15 PM	0	0	0	0	0	0	0	0	0	0	0	0	0
5:30 PM	0	0	0	0	0	0	0	0	0	0	0	0	0
5:45 PM	0	0	0	0	0	0	0	0	0	0	0	0	0
TOTAL VOLUMES:	0	0	0	0	0	0	0	0	0	0	0	0	0

Counts Unlimited, Inc.
PO Box 1178
Corona, CA 91878
951-268-6268

Counts Unlimited, Inc.
PO Box 1178
Corona, CA 92878
(951) 268-6268

City of Riverside
N/S: McAllister Street
E/W: El Sobrante Road
Weather: Clear

File Name : 07_RIV_McA_El S AM
Site Code : 05123396
Start Date : 8/15/2023
Page No : 1

Groups Printed- Total Volume

	McAllister Street Southbound			El Sobrante Road Westbound			El Sobrante Road Eastbound			
Start Time	Left	Right	App. Total	Thru	Right	App. Total	Left	Thru	App. Total	Int. Total
07:00 AM	1	8	9	97	2	99	12	54	66	174
07:15 AM	4	12	16	102	3	105	6	49	55	176
07:30 AM	2	12	14	120	4	124	4	44	48	186
07:45 AM	8	6	14	127	25	152	9	60	69	235
Total	15	38	53	446	34	480	31	207	238	771
08:00 AM	7	9	16	88	14	102	9	57	66	184
08:15 AM	13	2	15	111	2	113	5	42	47	175
08:30 AM	2	17	19	125	2	127	2	46	48	194
08:45 AM	2	8	10	124	3	127	6	35	41	178
Total	24	36	60	448	21	469	22	180	202	731
Grand Total	39	74	113	894	55	949	53	387	440	1502
Apprch %	34.5	65.5		94.2	5.8		12	88		
Total %	2.6	4.9	7.5	59.5	3.7	63.2	3.5	25.8	29.3	

	McAllister Street Southbound			El Sobrante Road Westbound			El Sobrante Road Eastbound			
Start Time	Left	Right	App. Total	Thru	Right	App. Total	Left	Thru	App. Total	Int. Total
Peak Hour Analysis From 07:00 AM to 08:45 AM - Peak 1 of 1										
Peak Hour for Entire Intersection Begins at 07:45 AM										
07:45 AM	8	6	14	**127**	**25**	**152**	**9**	**60**	**69**	**235**
08:00 AM	7	9	16	88	14	102	9	57	66	184
08:15 AM	**13**	2	15	111	2	113	5	42	47	175
08:30 AM	2	**17**	**19**	125	2	127	2	46	48	194
Total Volume	30	34	64	451	43	494	25	205	230	788
% App. Total	46.9	53.1		91.3	8.7		10.9	89.1		
PHF	.577	.500	.842	.888	.430	.813	.694	.854	.833	.838

Counts Unlimited, Inc.
PO Box 1178
Corona, CA 92878
(951) 268-6268

City of Riverside
N/S: McAllister Street
E/W: El Sobrante Road
Weather: Clear

File Name : 07_RIV_McA_El S AM
Site Code : 05123396
Start Date : 8/15/2023
Page No : 2

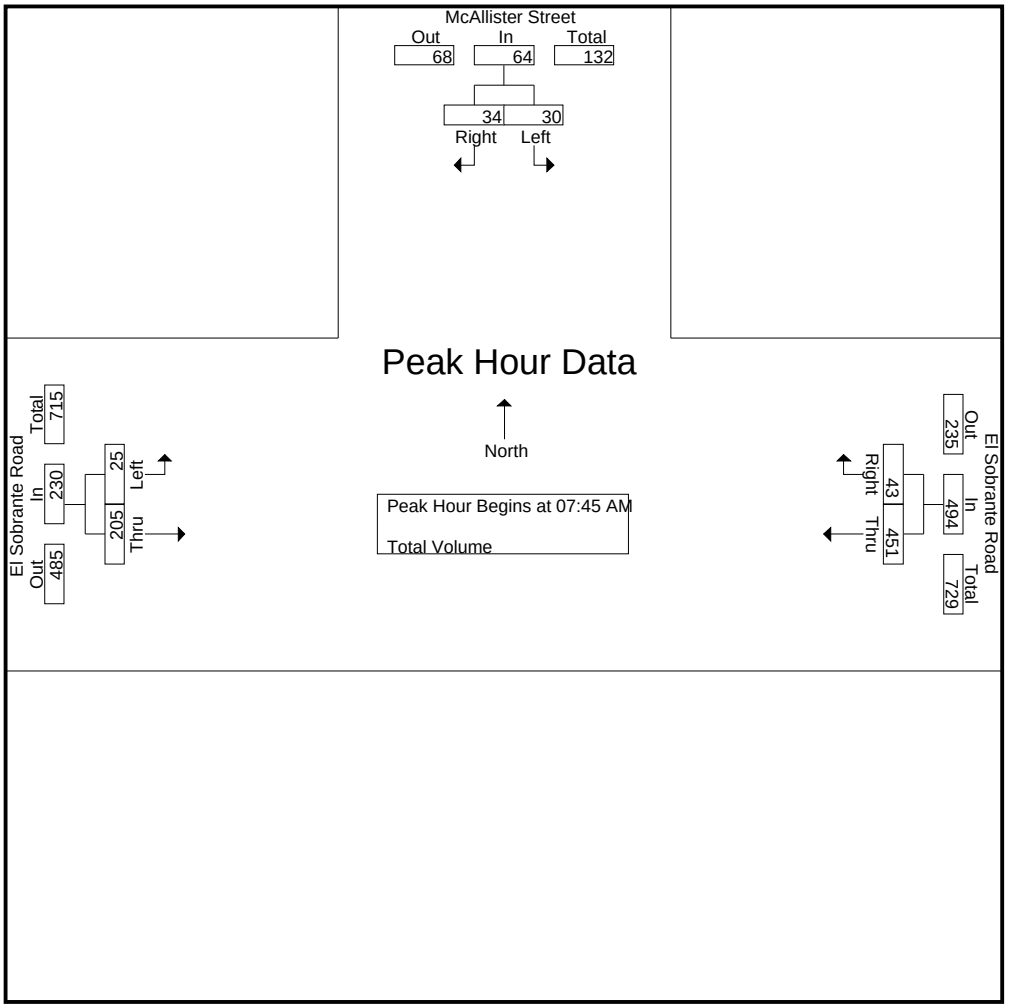

Peak Hour Analysis From 07:00 AM to 08:45 AM - Peak 1 of 1
Peak Hour for Each Approach Begins at:

	07:45 AM			07:45 AM			07:00 AM		
+0 mins.	8	6	14	**127**	**25**	**152**	**12**	54	66
+15 mins.	7	9	16	88	14	102	6	49	55
+30 mins.	**13**	2	15	111	2	113	4	44	48
+45 mins.	2	**17**	**19**	125	2	127	9	**60**	**69**
Total Volume	30	34	64	451	43	494	31	207	238
% App. Total	46.9	53.1		91.3	8.7		13	87	
PHF	.577	.500	.842	.888	.430	.813	.646	.863	.862

Counts Unlimited, Inc.
PO Box 1178
Corona, CA 92878
(951) 268-6268

City of Riverside
N/S: McAllister Street
E/W: El Sobrante Road
Weather: Clear

File Name : 07_RIV_McA_El S PM
Site Code : 05123396
Start Date : 8/15/2023
Page No : 1

Groups Printed- Total Volume

	McAllister Street Southbound			El Sobrante Road Westbound			El Sobrante Road Eastbound			
Start Time	Left	Right	App. Total	Thru	Right	App. Total	Left	Thru	App. Total	Int. Total
04:00 PM	1	7	8	87	3	90	8	159	167	265
04:15 PM	4	5	9	75	5	80	7	166	173	262
04:30 PM	7	8	15	77	0	77	5	172	177	269
04:45 PM	2	9	11	58	3	61	8	176	184	256
Total	14	29	43	297	11	308	28	673	701	1052
05:00 PM	4	5	9	74	2	76	5	166	171	256
05:15 PM	6	15	21	56	3	59	11	158	169	249
05:30 PM	4	15	19	69	12	81	7	150	157	257
05:45 PM	1	8	9	61	17	78	8	143	151	238
Total	15	43	58	260	34	294	31	617	648	1000
Grand Total	29	72	101	557	45	602	59	1290	1349	2052
Apprch %	28.7	71.3		92.5	7.5		4.4	95.6		
Total %	1.4	3.5	4.9	27.1	2.2	29.3	2.9	62.9	65.7	

	McAllister Street Southbound			El Sobrante Road Westbound			El Sobrante Road Eastbound			
Start Time	Left	Right	App. Total	Thru	Right	App. Total	Left	Thru	App. Total	Int. Total
Peak Hour Analysis From 04:00 PM to 05:45 PM - Peak 1 of 1										
Peak Hour for Entire Intersection Begins at 04:00 PM										
04:00 PM	1	7	8	**87**	3	**90**	**8**	159	167	265
04:15 PM	4	5	9	75	**5**	80	7	166	173	262
04:30 PM	**7**	8	**15**	77	0	77	5	172	177	**269**
04:45 PM	2	**9**	11	58	3	61	8	**176**	**184**	256
Total Volume	14	29	43	297	11	308	28	673	701	1052
% App. Total	32.6	67.4		96.4	3.6		4	96		
PHF	.500	.806	.717	.853	.550	.856	.875	.956	.952	.978

Counts Unlimited, Inc.
PO Box 1178
Corona, CA 92878
(951) 268-6268

City of Riverside
N/S: McAllister Street
E/W: El Sobrante Road
Weather: Clear

File Name : 07_RIV_McA_El S PM
Site Code : 05123396
Start Date : 8/15/2023
Page No : 2

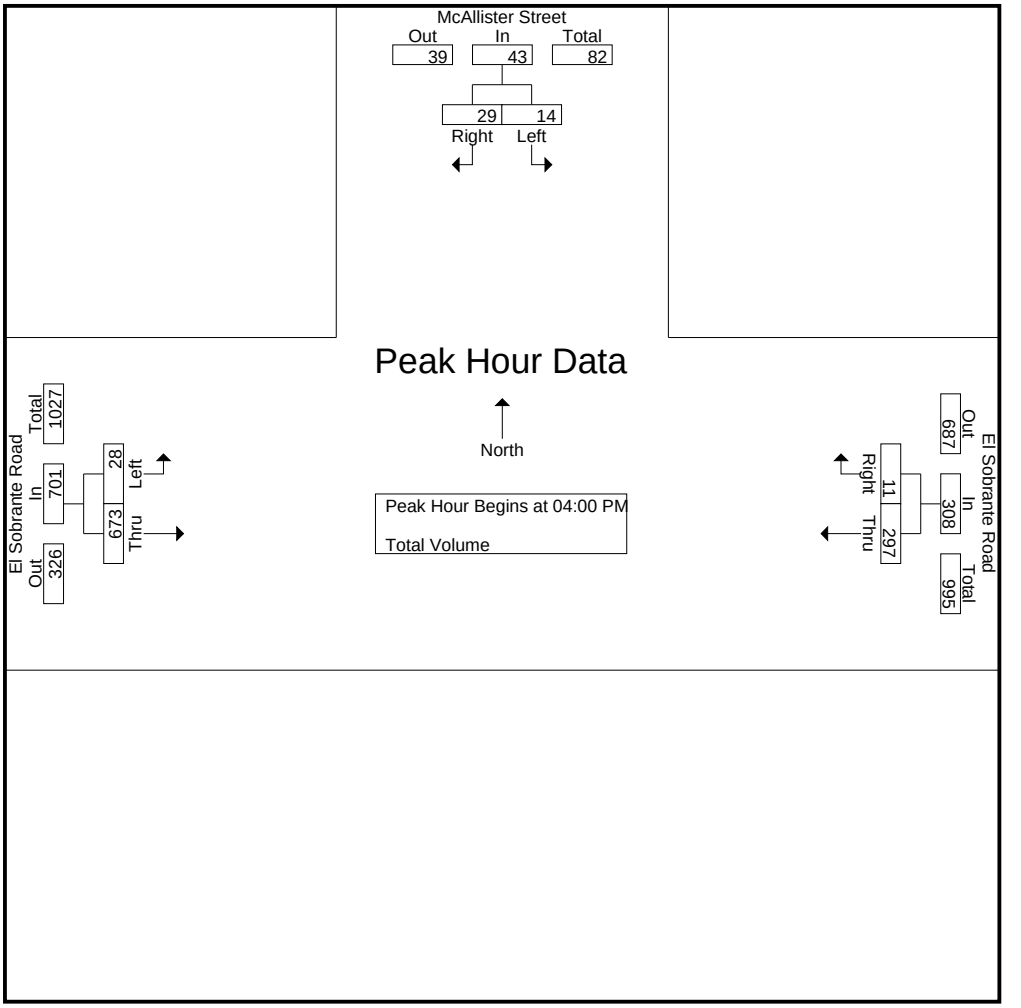

Peak Hour Analysis From 04:00 PM to 05:45 PM - Peak 1 of 1
Peak Hour for Each Approach Begins at:

	04:45 PM			04:00 PM			04:15 PM		
+0 mins.	2	9	11	**87**	3	**90**	7	166	173
+15 mins.	4	5	9	75	**5**	80	5	172	177
+30 mins.	**6**	**15**	**21**	77	0	77	**8**	**176**	**184**
+45 mins.	4	15	19	58	3	61	5	166	171
Total Volume	16	44	60	297	11	308	25	680	705
% App. Total	26.7	73.3		96.4	3.6		3.5	96.5	
PHF	.667	.733	.714	.853	.550	.856	.781	.966	.958

Location: Riverside
N/S: McAllister Street
E/W: El Sobrante Road

Date: 8/17/2023
Day: Thursday

PEDESTRIANS

	North Leg McAllister Street	East Leg El Sobrante Road	South Leg McAllister Street	West Leg El Sobrante Road	
	Pedestrians	Pedestrians	Pedestrians	Pedestrians	
7:00 AM	0	0	0	0	0
7:15 AM	0	0	0	0	0
7:30 AM	0	0	0	0	0
7:45 AM	0	0	0	0	0
8:00 AM	0	0	0	0	0
8:15 AM	0	0	0	0	0
8:30 AM	0	0	0	0	0
8:45 AM	0	0	0	0	0
TOTAL VOLUMES:	0	0	0	0	0

	North Leg McAllister Street	East Leg El Sobrante Road	South Leg McAllister Street	West Leg El Sobrante Road	
	Pedestrians	Pedestrians	Pedestrians	Pedestrians	
4:00 PM	0	0	0	0	0
4:15 PM	0	0	0	0	0
4:30 PM	0	0	0	0	0
4:45 PM	0	0	0	0	0
5:00 PM	0	0	0	0	0
5:15 PM	0	0	0	0	0
5:30 PM	0	0	0	0	0
5:45 PM	0	0	0	0	0
TOTAL VOLUMES:	0	0	0	0	0

Counts Unlimited, Inc.
PO Box 1178
Corona, CA 92878
951-268-6268

Location: Riverside
N/S: McAllister Street
E/W: El Sobrante Road

Date: 8/17/2023
Day: Thursday

BICYCLES

	Southbound McAllister Street			Westbound El Sobrante Road			Northbound McAllister Street			Eastbound El Sobrante Road			
	Left	Thru	Right	Left	Thru	Right	Left	Thru	Right	Left	Thru	Right	
7:00 AM	0	0	0	0	0	0	0	0	0	0	0	0	0
7:15 AM	0	0	0	0	0	0	0	0	0	0	0	0	0
7:30 AM	0	0	0	0	0	0	0	0	0	0	0	0	0
7:45 AM	0	0	0	0	0	0	0	0	0	0	0	0	0
8:00 AM	0	0	0	0	0	0	0	0	0	0	0	0	0
8:15 AM	0	0	0	0	0	0	0	0	0	0	0	0	0
8:30 AM	0	0	0	0	0	0	0	0	0	0	0	0	0
8:45 AM	0	0	0	0	0	0	0	0	0	0	0	0	0
TOTAL VOLUMES:	0	0	0	0	0	0	0	0	0	0	0	0	0

	Southbound McAllister Street			Westbound El Sobrante Road			Northbound McAllister Street			Eastbound El Sobrante Road			
	Left	Thru	Right	Left	Thru	Right	Left	Thru	Right	Left	Thru	Right	
4:00 PM	0	0	0	0	0	0	0	0	0	0	0	0	0
4:15 PM	0	0	0	0	0	0	0	0	0	0	0	0	0
4:30 PM	0	0	1	0	0	0	0	0	0	0	0	0	1
4:45 PM	1	0	0	0	0	0	0	0	0	0	0	0	1
5:00 PM	0	0	0	0	0	0	0	0	0	0	0	0	0
5:15 PM	0	0	0	0	0	0	0	0	0	0	0	0	0
5:30 PM	0	0	0	0	0	0	0	0	0	0	0	0	0
5:45 PM	0	0	0	0	0	0	0	0	0	0	0	0	0
TOTAL VOLUMES:	1	0	1	0	0	0	0	0	0	0	0	0	2

Counts Unlimited, Inc.

PO Box 1178
Corona, CA 92878
Phone: (951) 268-6268
email: counts@countsunlimited.com

City of Riverside
El Sobrante Road
E/ McAllister Street
24 Hour Directional Volume Count

RIV004
Site Code: 051-23396

Start Time	8/17/23 Thu	Eastbound Morning	Eastbound Afternoon	Hour Totals Morning	Hour Totals Afternoon	Westbound Morning	Westbound Afternoon	Hour Totals Morning	Hour Totals Afternoon	Combined Totals Morning	Combined Totals Afternoon
12:00		11	71			11	50				
12:15		19	60			18	74				
12:30		12	68			15	47				
12:45		20	75	62	274	12	55	56	226	118	500
01:00		4	75			8	67				
01:15		9	90			3	86				
01:30		8	89			5	75				
01:45		8	121	29	375	8	68	24	296	53	671
02:00		7	119			10	83				
02:15		6	142			6	74				
02:30		16	127			19	85				
02:45		7	156	36	544	19	86	54	328	90	872
03:00		7	145			18	61				
03:15		8	145			26	82				
03:30		7	160			32	72				
03:45		11	151	33	601	48	**89**	124	304	157	905
04:00		11	163			77	**89**				
04:15		10	**171**			90	**79**				
04:30		15	**183**			116	**77**				
04:45		18	**177**	54	694	104	61	387	306	441	1000
05:00		25	**175**			113	78				
05:15		42	166			95	60				
05:30		30	157			110	79				
05:45		61	145	158	643	110	81	428	298	586	941
06:00		49	128			80	66				
06:15		45	122			131	61				
06:30		59	148			72	37				
06:45		54	128	207	526	117	58	400	222	607	748
07:00		55	128			101	37				
07:15		58	84			106	33				
07:30		49	90			122	38				
07:45		**75**	84	237	386	**161**	42	490	150	727	536
08:00		**70**	79			**106**	32				
08:15		**59**	75			**119**	33				
08:30		**50**	66			**127**	28				
08:45		37	59	216	279	129	27	481	120	697	399
09:00		44	60			104	24				
09:15		41	48			95	22				
09:30		43	57			86	14				
09:45		42	46	170	211	82	17	367	77	537	288
10:00		37	37			78	30				
10:15		39	29			67	18				
10:30		48	44			115	12				
10:45		50	33	174	143	72	12	332	72	506	215
11:00		47	34			70	14				
11:15		51	26			58	11				
11:30		60	11			57	13				
11:45		57	18	215	89	56	8	241	46	456	135
Total		1591	4765	1591	4765	3384	2445	3384	2445	4975	7210
Combined Total		6356		6356		5829		5829		12185	
AM Peak	-	07:45	-	-	-	07:45	-	-	-	-	-
Vol.	-	254	-	-	-	513	-	-	-	-	-
P.H.F.		0.847				0.797					
PM Peak	-	-	04:15	-	-	-	03:45	-	-	-	-
Vol.	-	-	706	-	-	-	334	-	-	-	-
P.H.F.			0.964				0.938				
Percentage		25.0%	75.0%			58.1%	41.9%				
ADT/AADT		ADT 12,185		AADT 12,185							

Counts Unlimited, Inc.

PO Box 1178
Corona, CA 92878
Phone: (951) 268-6268
email: counts@countsunlimited.com

City of Riverside
La Sierra Avenue
N/ El Sobrante Road
24 Hour Directional Volume Count

RIV003
Site Code: 051-23396

Start Time	8/17/23 Thu	Northbound Morning	Northbound Afternoon	Hour Totals Morning	Hour Totals Afternoon	Southbound Morning	Southbound Afternoon	Hour Totals Morning	Hour Totals Afternoon	Combined Totals Morning	Combined Totals Afternoon
12:00		19	85			22	76				
12:15		24	90			17	80				
12:30		21	73			19	124				
12:45		19	78	83	326	16	97	74	377	157	703
01:00		9	99			5	108				
01:15		8	110			9	122				
01:30		7	96			8	123				
01:45		9	107	33	412	9	141	31	494	64	906
02:00		12	93			10	204				
02:15		7	111			5	146				
02:30		21	106			20	188				
02:45		22	115	62	425	12	266	47	804	109	1229
03:00		16	101			9	205				
03:15		31	126			8	320				
03:30		30	111			10	263				
03:45		49	134	126	472	12	316	39	1104	165	1576
04:00		70	**134**			17	238				
04:15		92	**126**			12	**306**				
04:30		121	**126**			24	**387**				
04:45		103	**142**	386	528	25	**406**	78	1337	464	1865
05:00		122	114			42	**287**				
05:15		100	97			52	292				
05:30		102	132			79	260				
05:45		118	104	442	447	87	219	260	1058	702	1505
06:00		87	118			81	206				
06:15		113	89			75	167				
06:30		98	66			87	180				
06:45		128	71	426	344	77	157	320	710	746	1054
07:00		137	57			86	125				
07:15		115	71			75	105				
07:30		125	62			75	106				
07:45		**163**	59	540	249	108	107	344	443	884	692
08:00		**143**	50			95	91				
08:15		**108**	45			65	102				
08:30		**154**	52			79	71				
08:45		151	43	556	190	59	73	298	337	854	527
09:00		130	45			61	77				
09:15		124	30			72	55				
09:30		104	33			67	62				
09:45		101	23	459	131	75	55	275	249	734	380
10:00		96	40			57	40				
10:15		87	23			67	36				
10:30		123	21			**95**	48				
10:45		96	15	402	99	**76**	38	295	162	697	261
11:00		96	19			**91**	34				
11:15		85	14			**101**	31				
11:30		72	22			83	17				
11:45		74	12	327	67	79	26	354	108	681	175
Total		3842	3690	3842	3690	2415	7183	2415	7183	6257	10873
Combined Total		7532		7532		9598		9598		17130	
AM Peak	-	07:45	-	-	-	10:30	-	-	-	-	-
Vol.	-	568	-	-	-	363	-	-	-	-	-
P.H.F.		0.871				0.840					
PM Peak	-	-	04:00	-	-	-	04:15	-	-	-	-
Vol.	-	-	528	-	-	-	1386	-	-	-	-
P.H.F.			0.930				0.853				
Percentage		51.0%	49.0%			25.2%	74.8%				
ADT/AADT		ADT 17,130		AADT 17,130							

Counts Unlimited, Inc.

PO Box 1178
Corona, CA 92878
Phone: (951) 268-6268
email: counts@countsunlimited.com

City of Riverside
La Sierra Avenue
S/ Indiana Avenue
24 Hour Directional Volume Count

RIV001
Site Code: 051-23396

Start Time	8/17/23 Thu	Northbound Morning	Northbound Afternoon	Hour Totals Morning	Hour Totals Afternoon	Southbound Morning	Southbound Afternoon	Hour Totals Morning	Hour Totals Afternoon	Combined Totals Morning	Combined Totals Afternoon
12:00		33	205			53	195				
12:15		34	189			41	209				
12:30		32	235			34	256				
12:45		28	175	127	804	35	215	163	875	290	1679
01:00		28	156			22	240				
01:15		20	212			40	280				
01:30		17	181			27	269				
01:45		18	209	83	758	26	303	115	1092	198	1850
02:00		23	217			16	292				
02:15		16	208			15	303				
02:30		33	195			27	346				
02:45		25	226	97	846	18	388	76	1329	173	2175
03:00		36	**385**			22	324				
03:15		47	**334**			18	350				
03:30		58	**241**			15	349				
03:45		68	**235**	209	1195	20	415	75	1438	284	2633
04:00		96	239			21	373				
04:15		163	240			24	408				
04:30		159	252			34	**427**				
04:45		187	225	605	956	34	**401**	113	1609	718	2565
05:00		210	226			59	**425**				
05:15		168	234			69	**426**				
05:30		222	238			68	385				
05:45		229	225	829	923	94	383	290	1619	1119	2542
06:00		212	209			106	351				
06:15		250	203			111	351				
06:30		268	199			133	356				
06:45		296	196	1026	807	120	321	470	1379	1496	2186
07:00		325	200			156	260				
07:15		338	216			162	283				
07:30		**332**	182			**249**	293				
07:45		**420**	188	1415	786	**315**	284	882	1120	2297	1906
08:00		**423**	154			**264**	264				
08:15		**382**	139			**183**	266				
08:30		310	135			171	261				
08:45		333	109	1448	537	146	208	764	999	2212	1536
09:00		251	101			137	206				
09:15		226	98			141	186				
09:30		256	95			147	160				
09:45		278	75	1011	369	157	141	582	693	1593	1062
10:00		289	88			129	123				
10:15		247	57			136	135				
10:30		222	47			192	109				
10:45		238	63	996	255	181	118	638	485	1634	740
11:00		241	48			186	69				
11:15		224	36			193	83				
11:30		218	41			204	71				
11:45		190	35	873	160	222	50	805	273	1678	433
Total		8719	8396	8719	8396	4973	12911	4973	12911	13692	21307
Combined Total		17115		17115		17884		17884		34999	
AM Peak	-	07:30	-	-	-	07:30	-	-	-	-	-
Vol.	-	1557	-	-	-	1011	-	-	-	-	-
P.H.F.		0.920				0.802					
PM Peak	-	-	03:00	-	-	-	04:30	-	-	-	-
Vol.	-	-	1195	-	-	-	1679	-	-	-	-
P.H.F.			0.776				0.983				
Percentage		50.9%	49.1%			27.8%	72.2%				
ADT/AADT		ADT 34,999		AADT 34,999							

Counts Unlimited, Inc.

PO Box 1178
Corona, CA 92878
Phone: (951) 268-6268
email: counts@countsunlimited.com

City of Riverside
Victoria Avenue
E/ La Sierra Avenue
24 Hour Directional Volume Count

RIV002
Site Code: 051-23396

Start Time	8/17/23 Thu	Eastbound Morning	Eastbound Afternoon	Hour Totals Morning	Hour Totals Afternoon	Westbound Morning	Westbound Afternoon	Hour Totals Morning	Hour Totals Afternoon	Combined Totals Morning	Combined Totals Afternoon
12:00		2	43			3	36				
12:15		0	35			4	45				
12:30		1	37			2	45				
12:45		3	41	6	156	4	51	13	177	19	333
01:00		3	43			1	40				
01:15		3	60			4	59				
01:30		0	39			0	40				
01:45		4	54	10	196	2	51	7	190	17	386
02:00		2	54			2	59				
02:15		1	56			1	48				
02:30		1	65			0	73				
02:45		2	73	6	248	1	**103**	4	283	10	531
03:00		2	66			2	**78**				
03:15		1	89			2	**105**				
03:30		4	79			2	**94**				
03:45		2	**111**	9	345	2	71	8	348	17	693
04:00		3	**82**			3	78				
04:15		1	**82**			7	73				
04:30		6	**91**			10	72				
04:45		9	79	19	334	10	77	30	300	49	634
05:00		7	92			10	80				
05:15		12	85			14	88				
05:30		8	75			20	74				
05:45		9	87	36	339	33	87	77	329	113	668
06:00		11	70			17	53				
06:15		18	55			21	64				
06:30		27	59			34	48				
06:45		36	50	92	234	46	37	118	202	210	436
07:00		33	45			41	35				
07:15		54	50			48	38				
07:30		54	44			60	44				
07:45		**92**	34	233	173	**84**	23	233	140	466	313
08:00		**80**	27			**89**	33				
08:15		**82**	33			**56**	41				
08:30		**65**	18			**62**	22				
08:45		33	20	260	98	61	21	268	117	528	215
09:00		22	14			56	22				
09:15		41	27			43	16				
09:30		34	19			57	27				
09:45		30	14	127	74	42	8	198	73	325	147
10:00		29	11			46	17				
10:15		27	11			58	6				
10:30		32	10			59	7				
10:45		31	9	119	41	43	10	206	40	325	81
11:00		29	6			49	9				
11:15		29	6			54	8				
11:30		39	7			52	13				
11:45		43	6	140	25	38	4	193	34	333	59
Total		1057	2263	1057	2263	1355	2233	1355	2233	2412	4496
Combined Total		3320		3320		3588		3588		6908	
AM Peak	-	07:45	-	-	-	07:45	-	-	-	-	-
Vol.	-	319	-	-	-	291	-	-	-	-	-
P.H.F.		0.867				0.817					
PM Peak	-	-	03:45	-	-	-	02:45	-	-	-	-
Vol.	-	-	366	-	-	-	380	-	-	-	-
P.H.F.			0.824				0.905				
Percentage		31.8%	68.2%			37.8%	62.2%				
ADT/AADT		ADT 6,908		AADT 6,908							

APPENDIX 1.2: SITE ADJACENT QUEUES

This Page Intentionally Left Blank

Intersection: 8: El Sobrante Rd. & Street A

Movement	EB	EB	WB	SB
Directions Served	L	T	TR	LR
Maximum Queue (ft)	59	18	3	160
Average Queue (ft)	25	1	0	74
95th Queue (ft)	51	13	2	138
Link Distance (ft)		2940	2649	1174
Upstream Blk Time (%)				
Queuing Penalty (veh)				
Storage Bay Dist (ft)	100			
Storage Blk Time (%)		0		
Queuing Penalty (veh)		0		

Network Summary

Network wide Queuing Penalty: 0

Intersection: 8: El Sobrante Rd. & Street A

Movement	EB	WB	SB
Directions Served	L	TR	LR
Maximum Queue (ft)	90	7	141
Average Queue (ft)	41	0	53
95th Queue (ft)	75	6	103
Link Distance (ft)		2649	1174
Upstream Blk Time (%)			
Queuing Penalty (veh)			
Storage Bay Dist (ft)	100		
Storage Blk Time (%)	0		
Queuing Penalty (veh)	1		

Network Summary

Network wide Queuing Penalty: 1

APPENDIX 3.1: TRAFFIC COUNTS

This Page Intentionally Left Blank

Counts Unlimited, Inc.
PO Box 1178
Corona, CA 92878
(951) 268-6268

City of Riverside
N/S: La Sierra Avenue
E/W: SR-91 Westbound Ramps
Weather: Clear

File Name : 01_RIV_LS_91W AM
Site Code : 05124383
Start Date : 4/25/2024
Page No : 1

Groups Printed- Passenger Vehicles - Large 2 Axle Vehicles - 3 Axle Vehicles - 4+ Axle Trucks

	La Sierra Avenue Southbound					SR-91 Westbound Off Ramp Westbound					La Sierra Avenue Northbound					SR-91 Westbound On Ramp Eastbound							
Start Time	Left	Thru	Right	RTOR	App. Total	Left	Thru	Right	RTOR	App. Total	Left	Thru	Right	RTOR	App. Total	Left	Thru	Right	RTOR	App. Total	Exclu. Total	Inclu. Total	Int. Total
07:00 AM	0	135	37	14	172	39	1	66	54	106	128	158	0	0	286	0	0	0	0	0	68	564	632
07:15 AM	0	213	38	12	251	45	0	110	38	155	130	218	0	0	348	0	0	0	0	0	50	754	804
07:30 AM	0	230	40	18	270	53	0	111	56	164	128	259	0	0	387	0	0	0	0	0	74	821	895
07:45 AM	0	278	22	4	300	58	0	109	34	167	165	341	0	0	506	0	0	0	0	0	38	973	1011
Total	0	856	137	48	993	195	1	396	182	592	551	976	0	0	1527	0	0	0	0	0	230	3112	3342
08:00 AM	0	235	38	4	273	90	0	113	35	203	149	350	0	0	499	0	0	0	0	0	39	975	1014
08:15 AM	0	181	33	16	214	74	0	128	44	202	169	353	0	0	522	0	0	0	0	0	60	938	998
08:30 AM	0	176	40	9	216	43	1	128	71	172	130	227	0	0	357	0	0	0	0	0	80	745	825
08:45 AM	0	154	25	12	179	53	0	110	71	163	139	212	0	0	351	0	0	0	0	0	83	693	776
Total	0	746	136	41	882	260	1	479	221	740	587	1142	0	0	1729	0	0	0	0	0	262	3351	3613
Grand Total	0	1602	273	89	1875	455	2	875	403	1332	1138	2118	0	0	3256	0	0	0	0	0	492	6463	6955
Apprch %	0	85.4	14.6			34.2	0.2	65.7			35	65	0			0	0	0					
Total %	0	24.8	4.2		29	7	0	13.5		20.6	17.6	32.8	0		50.4	0	0	0		0	7.1	92.9	
Passenger Vehicles	0	1558	263		1906	441	2	857		1691	1110	2072	0		3182	0	0	0		0	0	0	6779
% Passenger Vehicles	0	97.3	96.3	95.5	97	96.9	100	97.9	97	97.5	97.5	97.8	0	0	97.7	0	0	0	0	0	0	0	97.5
Large 2 Axle Vehicles	0	25	6		33	7	0	14		30	13	30	0		43	0	0	0		0	0	0	106
% Large 2 Axle Vehicles	0	1.6	2.2	2.2	1.7	1.5	0	1.6	2.2	1.7	1.1	1.4	0	0	1.3	0	0	0	0	0	0	0	1.5
3 Axle Vehicles	0	6	0		7	4	0	1		6	4	8	0		12	0	0	0		0	0	0	25
% 3 Axle Vehicles	0	0.4	0	1.1	0.4	0.9	0	0.1	0.2	0.3	0.4	0.4	0	0	0.4	0	0	0	0	0	0	0	0.4
4+ Axle Trucks	0	13	4		18	3	0	3		8	11	8	0		19	0	0	0		0	0	0	45
% 4+ Axle Trucks	0	0.8	1.5	1.1	0.9	0.7	0	0.3	0.5	0.5	1	0.4	0	0	0.6	0	0	0	0	0	0	0	0.6

	La Sierra Avenue Southbound				SR-91 Westbound Off Ramp Westbound				La Sierra Avenue Northbound				SR-91 Westbound On Ramp Eastbound				
Start Time	Left	Thru	Right	App. Total	Left	Thru	Right	App. Total	Left	Thru	Right	App. Total	Left	Thru	Right	App. Total	Int. Total
Peak Hour Analysis From 07:00 AM to 08:45 AM - Peak 1 of 1																	
Peak Hour for Entire Intersection Begins at 07:30 AM																	
07:30 AM	0	230	**40**	270	53	0	111	164	128	259	0	387	0	0	0	0	821
07:45 AM	0	**278**	22	**300**	58	0	109	167	165	341	0	506	0	0	0	0	973
08:00 AM	0	235	38	273	**90**	0	113	**203**	149	350	0	499	0	0	0	0	**975**
08:15 AM	0	181	33	214	74	0	**128**	202	**169**	**353**	0	**522**	0	0	0	0	938
Total Volume	0	924	133	1057	275	0	461	736	611	1303	0	1914	0	0	0	0	3707
% App. Total	0	87.4	12.6		37.4	0	62.6		31.9	68.1	0		0	0	0		
PHF	.000	.831	.831	.881	.764	.000	.900	.906	.904	.923	.000	.917	.000	.000	.000	.000	.951

Counts Unlimited, Inc.
PO Box 1178
Corona, CA 92878
(951) 268-6268

City of Riverside
N/S: La Sierra Avenue
E/W: SR-91 Westbound Ramps
Weather: Clear

File Name : 01_RIV_LS_91W AM
Site Code : 05124383
Start Date : 4/25/2024
Page No : 2

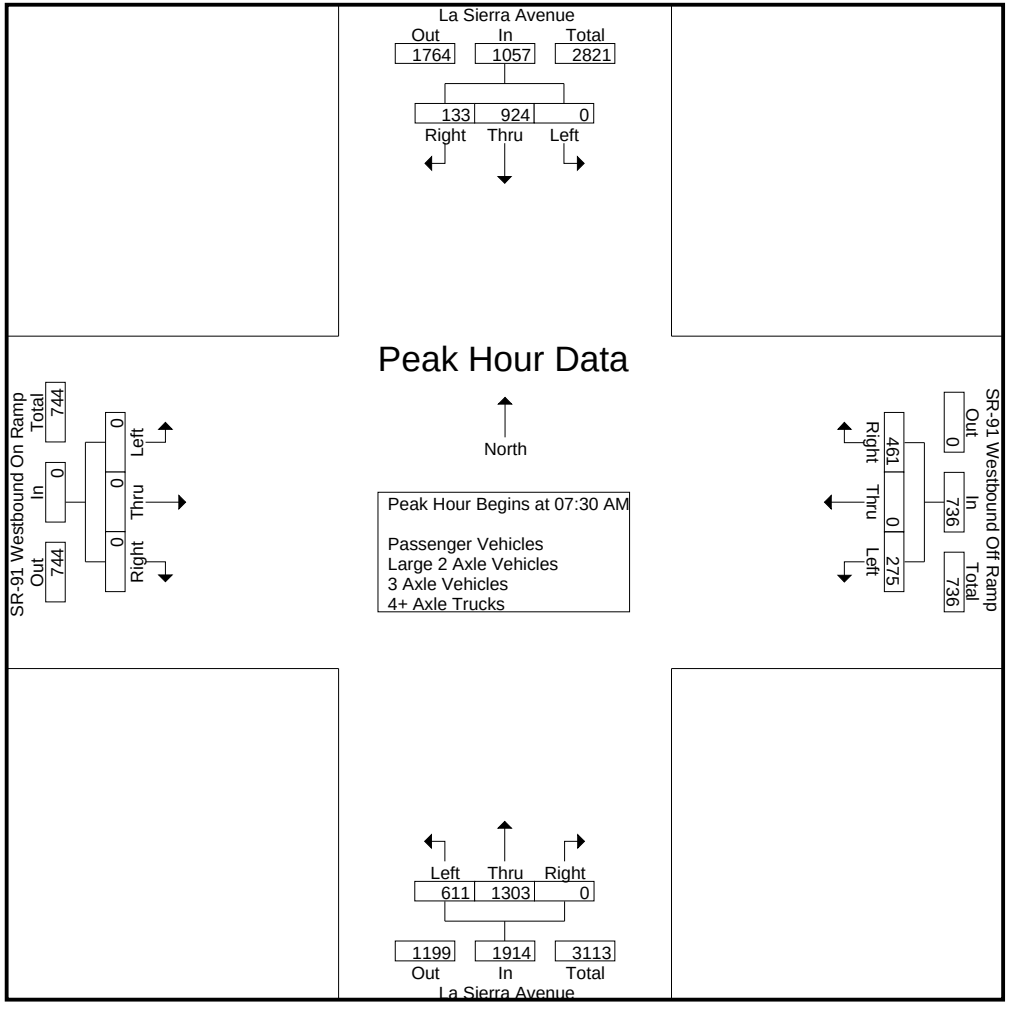

Counts Unlimited, Inc.
PO Box 1178
Corona, CA 92878
(951) 268-6268

City of Riverside
N/S: La Sierra Avenue
E/W: SR-91 Westbound Ramps
Weather: Clear

File Name : 01_RIV_LS_91W AM
Site Code : 05124383
Start Date : 4/25/2024

	La Sierra Avenue Southbound				SR-91 Westbound Off Ramp Westbound				La Sierra Avenue Northbound				SR-91 Westbound On Ramp Eastbound				
Start Time	Left	Thru	Right	App. Total	Left	Thru	Right	App. Total	Left	Thru	Right	App. Total	Left	Thru	Right	App. Total	Int. Total
Peak Hour Analysis From 07:00 AM to 08:45 AM - Peak 1 of 1																	
Peak Hour for Each Approach Begins at:																	
	07:15 AM				07:45 AM				07:30 AM				07:00 AM				
+0 mins.	0	213	38	251	58	0	109	167	128	259	0	387	0	0	0	0	
+15 mins.	0	230	**40**	270	**90**	0	113	**203**	165	341	0	506	0	0	0	0	
+30 mins.	0	**278**	22	**300**	74	0	**128**	202	149	350	0	499	0	0	0	0	
+45 mins.	0	235	38	273	43	**1**	128	172	**169**	**353**	0	**522**	0	0	0	0	
Total Volume	0	956	138	1094	265	1	478	744	611	1303	0	1914	0	0	0	0	
% App. Total	0	87.4	12.6		35.6	0.1	64.2		31.9	68.1	0		0	0	0		
PHF	.000	.860	.863	.912	.736	.250	.934	.916	.904	.923	.000	.917	.000	.000	.000	.000	

Counts Unlimited, Inc.
PO Box 1178
Corona, CA 92878
(951) 268-6268

City of Riverside
N/S: La Sierra Avenue
E/W: SR-91 Westbound Ramps
Weather: Clear

File Name : 01_RIV_LS_91W AM
Site Code : 05124383
Start Date : 4/25/2024

Groups Printed- Passenger Vehicles

	La Sierra Avenue Southbound					SR-91 Westbound Off Ramp Westbound					La Sierra Avenue Northbound					SR-91 Westbound On Ramp Eastbound							
Start Time	Left	Thru	Right	RTOR	App. Total	Left	Thru	Right	RTOR	App. Total	Left	Thru	Right	RTOR	App. Total	Left	Thru	Right	RTOR	App. Total	Exclu. Total	Inclu. Total	Int. Total
07:00 AM	0	133	36	13	169	36	1	63	51	100	122	155	0	0	277	0	0	0	0	0	64	546	610
07:15 AM	0	201	37	12	238	45	0	108	37	153	126	213	0	0	339	0	0	0	0	0	49	730	779
07:30 AM	0	221	39	18	260	52	0	110	56	162	125	251	0	0	376	0	0	0	0	0	74	798	872
07:45 AM	0	273	22	4	295	56	0	106	32	162	161	329	0	0	490	0	0	0	0	0	36	947	983
Total	0	828	134	47	962	189	1	387	176	577	534	948	0	0	1482	0	0	0	0	0	223	3021	3244
08:00 AM	0	228	36	4	264	89	0	113	34	202	146	347	0	0	493	0	0	0	0	0	38	959	997
08:15 AM	0	176	30	14	206	71	0	127	44	198	165	348	0	0	513	0	0	0	0	0	58	917	975
08:30 AM	0	173	40	8	213	41	1	124	70	166	128	221	0	0	349	0	0	0	0	0	78	728	806
08:45 AM	0	153	23	12	176	51	0	106	67	157	137	208	0	0	345	0	0	0	0	0	79	678	757
Total	0	730	129	38	859	252	1	470	215	723	576	1124	0	0	1700	0	0	0	0	0	253	3282	3535
Grand Total	0	1558	263	85	1821	441	2	857	391	1300	1110	2072	0	0	3182	0	0	0	0	0	476	6303	6779
Apprch %	0	85.6	14.4			33.9	0.2	65.9			34.9	65.1	0			0	0	0					
Total %	0	24.7	4.2		28.9	7	0	13.6		20.6	17.6	32.9	0		50.5	0	0	0		0	7	93	

	La Sierra Avenue Southbound				SR-91 Westbound Off Ramp Westbound				La Sierra Avenue Northbound				SR-91 Westbound On Ramp Eastbound				
Start Time	Left	Thru	Right	App. Total	Left	Thru	Right	App. Total	Left	Thru	Right	App. Total	Left	Thru	Right	App. Total	Int. Total
Peak Hour Analysis From 07:30 AM to 08:15 AM - Peak 1 of 1																	
Peak Hour for Entire Intersection Begins at 07:30 AM																	
07:30 AM	0	221	**39**	260	52	0	110	162	125	251	0	376	0	0	0	0	798
07:45 AM	0	**273**	22	**295**	56	0	106	162	161	329	0	490	0	0	0	0	947
08:00 AM	0	228	36	264	**89**	0	113	**202**	146	347	0	493	0	0	0	0	**959**
08:15 AM	0	176	30	206	71	0	**127**	198	**165**	**348**	0	**513**	0	0	0	0	917
Total Volume	0	898	127	1025	268	0	456	724	597	1275	0	1872	0	0	0	0	3621
% App. Total	0	87.6	12.4		37	0	63		31.9	68.1	0		0	0	0		
PHF	.000	.822	.814	.869	.753	.000	.898	.896	.905	.916	.000	.912	.000	.000	.000	.000	.944

Counts Unlimited, Inc.
PO Box 1178
Corona, CA 92878
(951) 268-6268

City of Riverside
N/S: La Sierra Avenue
E/W: SR-91 Westbound Ramps
Weather: Clear

File Name : 01_RIV_LS_91W AM
Site Code : 05124383
Start Date : 4/25/2024
Page No : 2

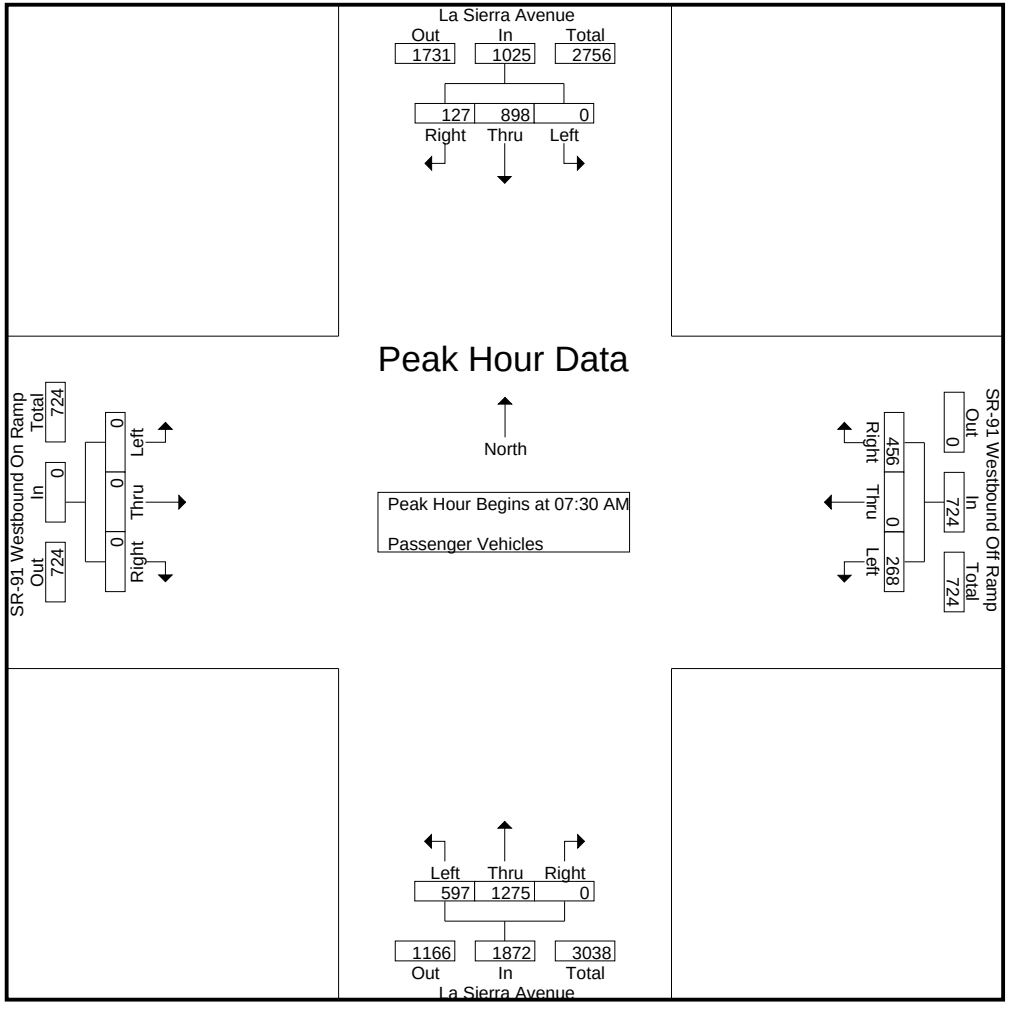

Counts Unlimited, Inc.
PO Box 1178
Corona, CA 92878
(951) 268-6268

City of Riverside
N/S: La Sierra Avenue
E/W: SR-91 Westbound Ramps
Weather: Clear

File Name : 01_RIV_LS_91W AM
Site Code : 05124383
Start Date : 4/25/2024

	La Sierra Avenue Southbound				SR-91 Westbound Off Ramp Westbound				La Sierra Avenue Northbound				SR-91 Westbound On Ramp Eastbound				
Start Time	Left	Thru	Right	App. Total	Left	Thru	Right	App. Total	Left	Thru	Right	App. Total	Left	Thru	Right	App. Total	Int. Total
Peak Hour Analysis From 07:30 AM to 08:15 AM - Peak 1 of 1																	
Peak Hour for Each Approach Begins at:																	
	07:30 AM				07:30 AM				07:30 AM				07:30 AM				
+0 mins.	0	221	**39**	260	52	0	110	162	125	251	0	376	0	0	0	0	
+15 mins.	0	**273**	22	**295**	56	0	106	162	161	329	0	490	0	0	0	0	
+30 mins.	0	228	36	264	**89**	0	113	**202**	146	347	0	493	0	0	0	0	
+45 mins.	0	176	30	206	71	0	**127**	198	**165**	**348**	0	**513**	0	0	0	0	
Total Volume	0	898	127	1025	268	0	456	724	597	1275	0	1872	0	0	0	0	
% App. Total	0	87.6	12.4		37	0	63		31.9	68.1	0		0	0	0		
PHF	.000	.822	.814	.869	.753	.000	.898	.896	.905	.916	.000	.912	.000	.000	.000	.000	

Counts Unlimited, Inc.
PO Box 1178
Corona, CA 92878
(951) 268-6268

City of Riverside
N/S: La Sierra Avenue
E/W: SR-91 Westbound Ramps
Weather: Clear

File Name : 01_RIV_LS_91W AM
Site Code : 05124383
Start Date : 4/25/2024
Page No : 1

Groups Printed- Large 2 Axle Vehicles

	La Sierra Avenue Southbound					SR-91 Westbound Off Ramp Westbound					La Sierra Avenue Northbound					SR-91 Westbound On Ramp Eastbound							
Start Time	Left	Thru	Right	RTOR	App. Total	Left	Thru	Right	RTOR	App. Total	Left	Thru	Right	RTOR	App. Total	Left	Thru	Right	RTOR	App. Total	Exclu. Total	Inclu. Total	Int. Total
07:00 AM	0	2	0	0	2	3	0	1	1	4	1	2	0	0	3	0	0	0	0	0	1	9	10
07:15 AM	0	7	1	0	8	0	0	0	0	0	2	4	0	0	6	0	0	0	0	0	0	14	14
07:30 AM	0	3	0	0	3	1	0	1	0	2	2	6	0	0	8	0	0	0	0	0	0	13	13
07:45 AM	0	3	0	0	3	2	0	3	2	5	2	9	0	0	11	0	0	0	0	0	2	19	21
Total	0	15	1	0	16	6	0	5	3	11	7	21	0	0	28	0	0	0	0	0	3	55	58
08:00 AM	0	5	1	0	6	0	0	0	1	0	3	1	0	0	4	0	0	0	0	0	1	10	11
08:15 AM	0	3	2	2	5	1	0	1	0	2	0	2	0	0	2	0	0	0	0	0	2	9	11
08:30 AM	0	1	0	0	1	0	0	4	1	4	1	4	0	0	5	0	0	0	0	0	1	10	11
08:45 AM	0	1	2	0	3	0	0	4	4	4	2	2	0	0	4	0	0	0	0	0	4	11	15
Total	0	10	5	2	15	1	0	9	6	10	6	9	0	0	15	0	0	0	0	0	8	40	48
Grand Total	0	25	6	2	31	7	0	14	9	21	13	30	0	0	43	0	0	0	0	0	11	95	106
Apprch %	0	80.6	19.4			33.3	0	66.7			30.2	69.8	0			0	0	0					
Total %	0	26.3	6.3		32.6	7.4	0	14.7		22.1	13.7	31.6	0		45.3	0	0	0		0	10.4	89.6	

	La Sierra Avenue Southbound				SR-91 Westbound Off Ramp Westbound				La Sierra Avenue Northbound				SR-91 Westbound On Ramp Eastbound				
Start Time	Left	Thru	Right	App. Total	Left	Thru	Right	App. Total	Left	Thru	Right	App. Total	Left	Thru	Right	App. Total	Int. Total
Peak Hour Analysis From 07:30 AM to 08:15 AM - Peak 1 of 1																	
Peak Hour for Entire Intersection Begins at 07:30 AM																	
07:30 AM	0	3	0	3	1	0	1	2	2	6	0	8	0	0	0	0	13
07:45 AM	0	3	0	3	**2**	0	**3**	**5**	2	**9**	0	**11**	0	0	0	0	**19**
08:00 AM	0	**5**	1	**6**	0	0	0	0	**3**	1	0	4	0	0	0	0	10
08:15 AM	0	3	**2**	5	1	0	1	2	0	2	0	2	0	0	0	0	9
Total Volume	0	14	3	17	4	0	5	9	7	18	0	25	0	0	0	0	51
% App. Total	0	82.4	17.6		44.4	0	55.6		28	72	0		0	0	0		
PHF	.000	.700	.375	.708	.500	.000	.417	.450	.583	.500	.000	.568	.000	.000	.000	.000	.671

Counts Unlimited, Inc.
PO Box 1178
Corona, CA 92878
(951) 268-6268

City of Riverside
N/S: La Sierra Avenue
E/W: SR-91 Westbound Ramps
Weather: Clear

File Name : 01_RIV_LS_91W AM
Site Code : 05124383
Start Date : 4/25/2024
Page No : 2

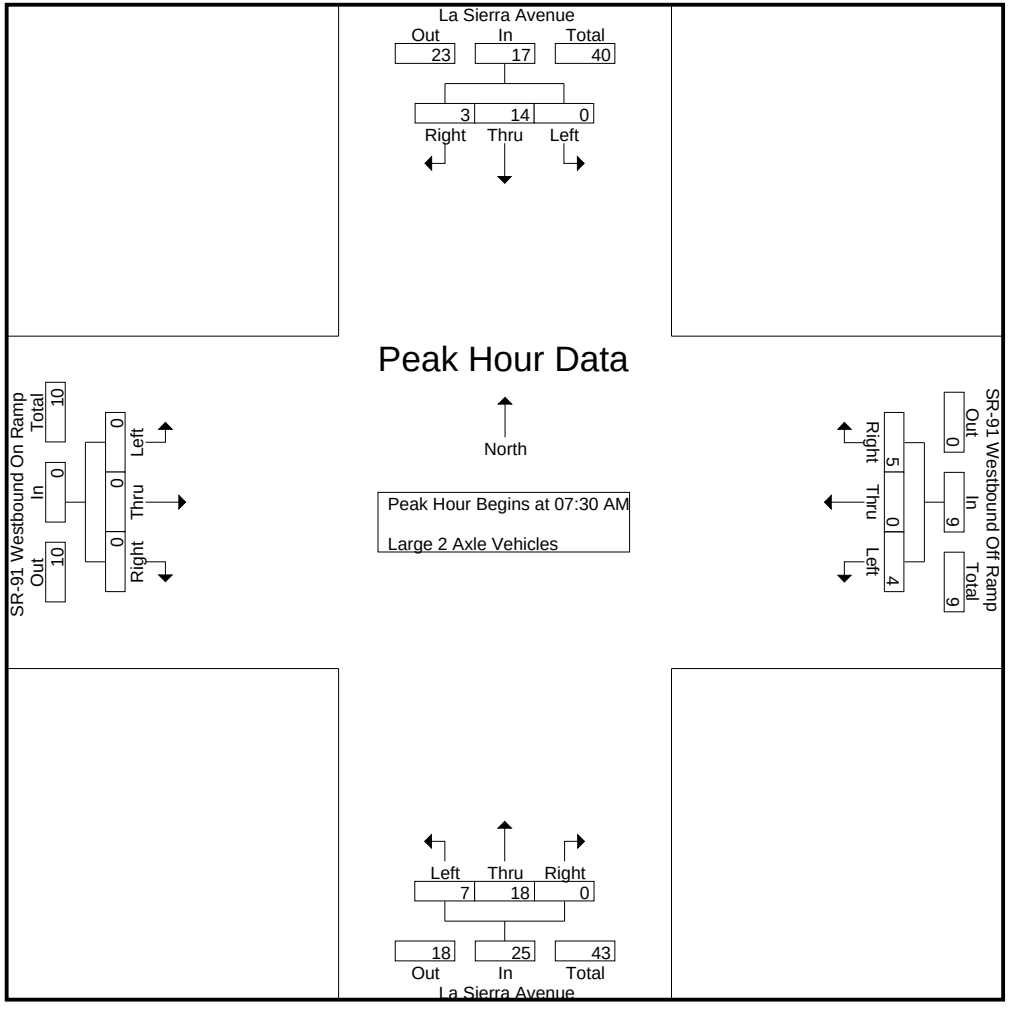

Counts Unlimited, Inc.
PO Box 1178
Corona, CA 92878
(951) 268-6268

City of Riverside
N/S: La Sierra Avenue
E/W: SR-91 Westbound Ramps
Weather: Clear

File Name : 01_RIV_LS_91W AM
Site Code : 05124383
Start Date : 4/25/2024

	La Sierra Avenue Southbound				SR-91 Westbound Off Ramp Westbound				La Sierra Avenue Northbound				SR-91 Westbound On Ramp Eastbound				
Start Time	Left	Thru	Right	App. Total	Left	Thru	Right	App. Total	Left	Thru	Right	App. Total	Left	Thru	Right	App. Total	Int. Total
Peak Hour Analysis From 07:30 AM to 08:15 AM - Peak 1 of 1																	
Peak Hour for Each Approach Begins at:																	
	07:30 AM				07:30 AM				07:30 AM				07:30 AM				
+0 mins.	0	3	0	3	1	0	1	2	2	6	0	8	0	0	0	0	
+15 mins.	0	3	0	3	**2**	0	**3**	**5**	2	**9**	0	**11**	0	0	0	0	
+30 mins.	0	**5**	1	**6**	0	0	0	0	**3**	1	0	4	0	0	0	0	
+45 mins.	0	3	**2**	5	1	0	1	2	0	2	0	2	0	0	0	0	
Total Volume	0	14	3	17	4	0	5	9	7	18	0	25	0	0	0	0	
% App. Total	0	82.4	17.6		44.4	0	55.6		28	72	0		0	0	0		
PHF	.000	.700	.375	.708	.500	.000	.417	.450	.583	.500	.000	.568	.000	.000	.000	.000	

Counts Unlimited, Inc.
PO Box 1178
Corona, CA 92878
(951) 268-6268

City of Riverside
N/S: La Sierra Avenue
E/W: SR-91 Westbound Ramps
Weather: Clear

File Name : 01_RIV_LS_91W AM
Site Code : 05124383
Start Date : 4/25/2024
Page No : 1

Groups Printed- 3 Axle Vehicles

	La Sierra Avenue Southbound					SR-91 Westbound Off Ramp Westbound					La Sierra Avenue Northbound					SR-91 Westbound On Ramp Eastbound							
Start Time	Left	Thru	Right	RTOR	App. Total	Left	Thru	Right	RTOR	App. Total	Left	Thru	Right	RTOR	App. Total	Left	Thru	Right	RTOR	App. Total	Exclu. Total	Inclu. Total	Int. Total
07:00 AM	0	0	0	0	0	0	0	1	1	1	2	1	0	0	3	0	0	0	0	0	1	4	5
07:15 AM	0	1	0	0	1	0	0	0	0	0	0	0	0	0	0	0	0	0	0	0	0	1	1
07:30 AM	0	4	0	0	4	0	0	0	0	0	0	0	0	0	0	0	0	0	0	0	0	4	4
07:45 AM	0	0	0	0	0	0	0	0	0	0	0	2	0	0	2	0	0	0	0	0	0	2	2
Total	0	5	0	0	5	0	0	1	1	1	2	3	0	0	5	0	0	0	0	0	1	11	12
08:00 AM	0	0	0	0	0	1	0	0	0	1	0	0	0	0	0	0	0	0	0	0	0	1	1
08:15 AM	0	0	0	0	0	2	0	0	0	2	2	3	0	0	5	0	0	0	0	0	0	7	7
08:30 AM	0	1	0	1	1	1	0	0	0	1	0	2	0	0	2	0	0	0	0	0	1	4	5
08:45 AM	0	0	0	0	0	0	0	0	0	0	0	0	0	0	0	0	0	0	0	0	0	0	0
Total	0	1	0	1	1	4	0	0	0	4	2	5	0	0	7	0	0	0	0	0	1	12	13
Grand Total	0	6	0	1	6	4	0	1	1	5	4	8	0	0	12	0	0	0	0	0	2	23	25
Apprch %	0	100	0			80	0	20			33.3	66.7	0			0	0	0					
Total %	0	26.1	0		26.1	17.4	0	4.3		21.7	17.4	34.8	0		52.2	0	0	0		0	8	92	

	La Sierra Avenue Southbound				SR-91 Westbound Off Ramp Westbound				La Sierra Avenue Northbound				SR-91 Westbound On Ramp Eastbound				
Start Time	Left	Thru	Right	App. Total	Left	Thru	Right	App. Total	Left	Thru	Right	App. Total	Left	Thru	Right	App. Total	Int. Total
Peak Hour Analysis From 07:30 AM to 08:15 AM - Peak 1 of 1																	
Peak Hour for Entire Intersection Begins at 07:30 AM																	
07:30 AM	0	**4**	0	**4**	0	0	0	0	0	0	0	0	0	0	0	0	4
07:45 AM	0	0	0	0	0	0	0	0	0	2	0	2	0	0	0	0	2
08:00 AM	0	0	0	0	1	0	0	1	0	0	0	0	0	0	0	0	1
08:15 AM	0	0	0	0	**2**	0	0	**2**	**2**	**3**	0	**5**	0	0	0	0	**7**
Total Volume	0	4	0	4	3	0	0	3	2	5	0	7	0	0	0	0	14
% App. Total	0	100	0		100	0	0		28.6	71.4	0		0	0	0		
PHF	.000	.250	.000	.250	.375	.000	.000	.375	.250	.417	.000	.350	.000	.000	.000	.000	.500

Counts Unlimited, Inc.
PO Box 1178
Corona, CA 92878
(951) 268-6268

City of Riverside
N/S: La Sierra Avenue
E/W: SR-91 Westbound Ramps
Weather: Clear

File Name : 01_RIV_LS_91W AM
Site Code : 05124383
Start Date : 4/25/2024
Page No : 2

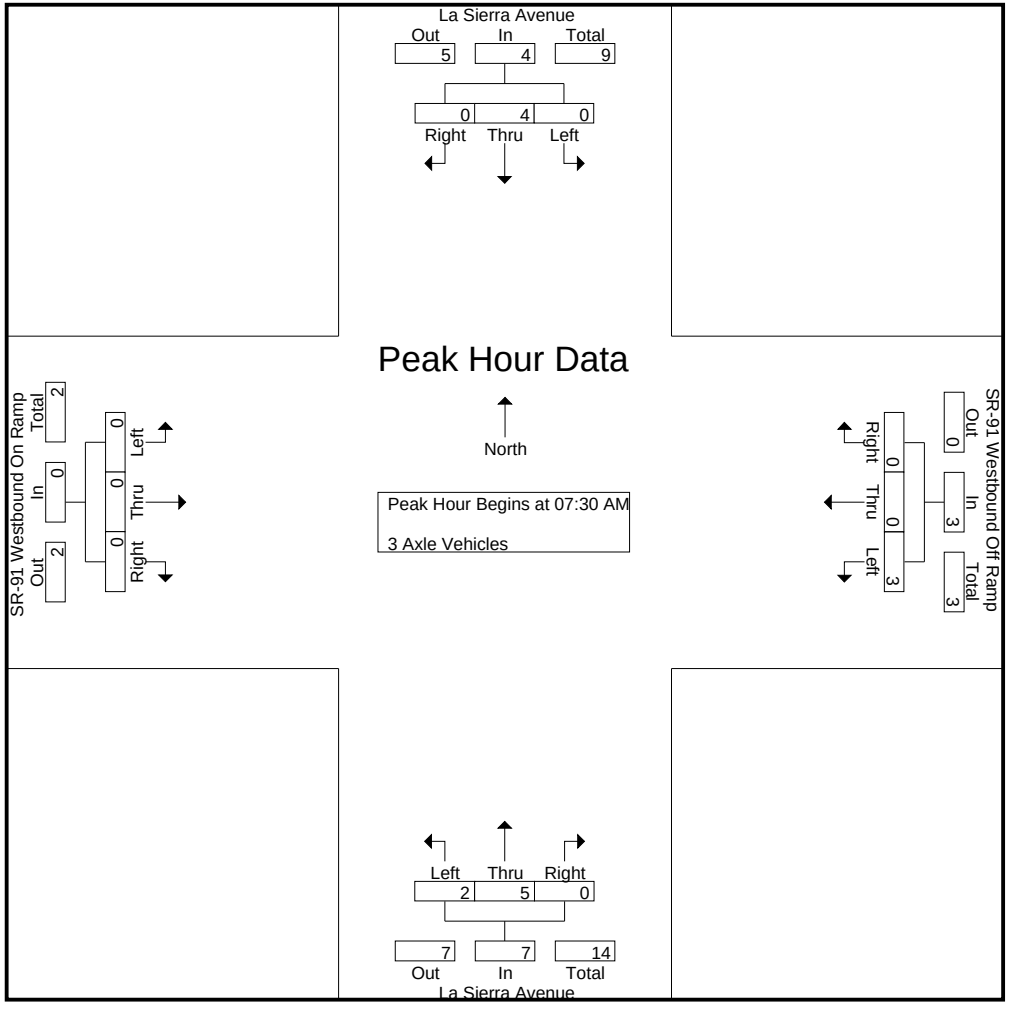

Counts Unlimited, Inc.
PO Box 1178
Corona, CA 92878
(951) 268-6268

City of Riverside
N/S: La Sierra Avenue
E/W: SR-91 Westbound Ramps
Weather: Clear

File Name : 01_RIV_LS_91W AM
Site Code : 05124383
Start Date : 4/25/2024

	La Sierra Avenue Southbound				SR-91 Westbound Off Ramp Westbound				La Sierra Avenue Northbound				SR-91 Westbound On Ramp Eastbound				
Start Time	Left	Thru	Right	App. Total	Left	Thru	Right	App. Total	Left	Thru	Right	App. Total	Left	Thru	Right	App. Total	Int. Total
Peak Hour Analysis From 07:30 AM to 08:15 AM - Peak 1 of 1																	
Peak Hour for Each Approach Begins at:																	
	07:30 AM				07:30 AM				07:30 AM				07:30 AM				
+0 mins.	0	**4**	0	**4**	0	0	0	0	0	0	0	0	0	0	0	0	
+15 mins.	0	0	0	0	0	0	0	0	0	2	0	2	0	0	0	0	
+30 mins.	0	0	0	0	1	0	0	1	0	0	0	0	0	0	0	0	
+45 mins.	0	0	0	0	**2**	0	0	**2**	**2**	**3**	0	**5**	0	0	0	0	
Total Volume	0	4	0	4	3	0	0	3	2	5	0	7	0	0	0	0	
% App. Total	0	100	0		100	0	0		28.6	71.4	0		0	0	0		
PHF	.000	.250	.000	.250	.375	.000	.000	.375	.250	.417	.000	.350	.000	.000	.000	.000	

Counts Unlimited, Inc.
PO Box 1178
Corona, CA 92878
(951) 268-6268

City of Riverside
N/S: La Sierra Avenue
E/W: SR-91 Westbound Ramps
Weather: Clear

File Name : 01_RIV_LS_91W AM
Site Code : 05124383
Start Date : 4/25/2024
Page No : 1

Groups Printed- 4+ Axle Trucks

	La Sierra Avenue Southbound					SR-91 Westbound Off Ramp Westbound					La Sierra Avenue Northbound					SR-91 Westbound On Ramp Eastbound							
Start Time	Left	Thru	Right	RTOR	App. Total	Left	Thru	Right	RTOR	App. Total	Left	Thru	Right	RTOR	App. Total	Left	Thru	Right	RTOR	App. Total	Exclu. Total	Inclu. Total	Int. Total
07:00 AM	0	0	1	1	1	0	0	1	1	1	3	0	0	0	3	0	0	0	0	0	2	5	7
07:15 AM	0	4	0	0	4	0	0	2	1	2	2	1	0	0	3	0	0	0	0	0	1	9	10
07:30 AM	0	2	1	0	3	0	0	0	0	0	1	2	0	0	3	0	0	0	0	0	0	6	6
07:45 AM	0	2	0	0	2	0	0	0	0	0	2	1	0	0	3	0	0	0	0	0	0	5	5
Total	0	8	2	1	10	0	0	3	2	3	8	4	0	0	12	0	0	0	0	0	3	25	28
08:00 AM	0	2	1	0	3	0	0	0	0	0	0	2	0	0	2	0	0	0	0	0	0	5	5
08:15 AM	0	2	1	0	3	0	0	0	0	0	2	0	0	0	2	0	0	0	0	0	0	5	5
08:30 AM	0	1	0	0	1	1	0	0	0	1	1	0	0	0	1	0	0	0	0	0	0	3	3
08:45 AM	0	0	0	0	0	2	0	0	0	2	0	2	0	0	2	0	0	0	0	0	0	4	4
Total	0	5	2	0	7	3	0	0	0	3	3	4	0	0	7	0	0	0	0	0	0	17	17
Grand Total	0	13	4	1	17	3	0	3	2	6	11	8	0	0	19	0	0	0	0	0	3	42	45
Apprch %	0	76.5	23.5			50	0	50			57.9	42.1	0			0	0	0					
Total %	0	31	9.5		40.5	7.1	0	7.1		14.3	26.2	19	0		45.2	0	0	0		0	6.7	93.3	

	La Sierra Avenue Southbound				SR-91 Westbound Off Ramp Westbound				La Sierra Avenue Northbound				SR-91 Westbound On Ramp Eastbound				
Start Time	Left	Thru	Right	App. Total	Left	Thru	Right	App. Total	Left	Thru	Right	App. Total	Left	Thru	Right	App. Total	Int. Total
Peak Hour Analysis From 07:30 AM to 08:15 AM - Peak 1 of 1																	
Peak Hour for Entire Intersection Begins at 07:30 AM																	
07:30 AM	0	**2**	**1**	**3**	0	0	0	0	1	**2**	0	**3**	0	0	0	0	**6**
07:45 AM	0	2	0	2	0	0	0	0	**2**	1	0	3	0	0	0	0	5
08:00 AM	0	2	1	3	0	0	0	0	0	2	0	2	0	0	0	0	5
08:15 AM	0	2	1	3	0	0	0	0	2	0	0	2	0	0	0	0	5
Total Volume	0	8	3	11	0	0	0	0	5	5	0	10	0	0	0	0	21
% App. Total	0	72.7	27.3		0	0	0		50	50	0		0	0	0		
PHF	.000	1.00	.750	.917	.000	.000	.000	.000	.625	.625	.000	.833	.000	.000	.000	.000	.875

Counts Unlimited, Inc.
PO Box 1178
Corona, CA 92878
(951) 268-6268

City of Riverside
N/S: La Sierra Avenue
E/W: SR-91 Westbound Ramps
Weather: Clear

File Name : 01_RIV_LS_91W AM
Site Code : 05124383
Start Date : 4/25/2024
Page No : 2

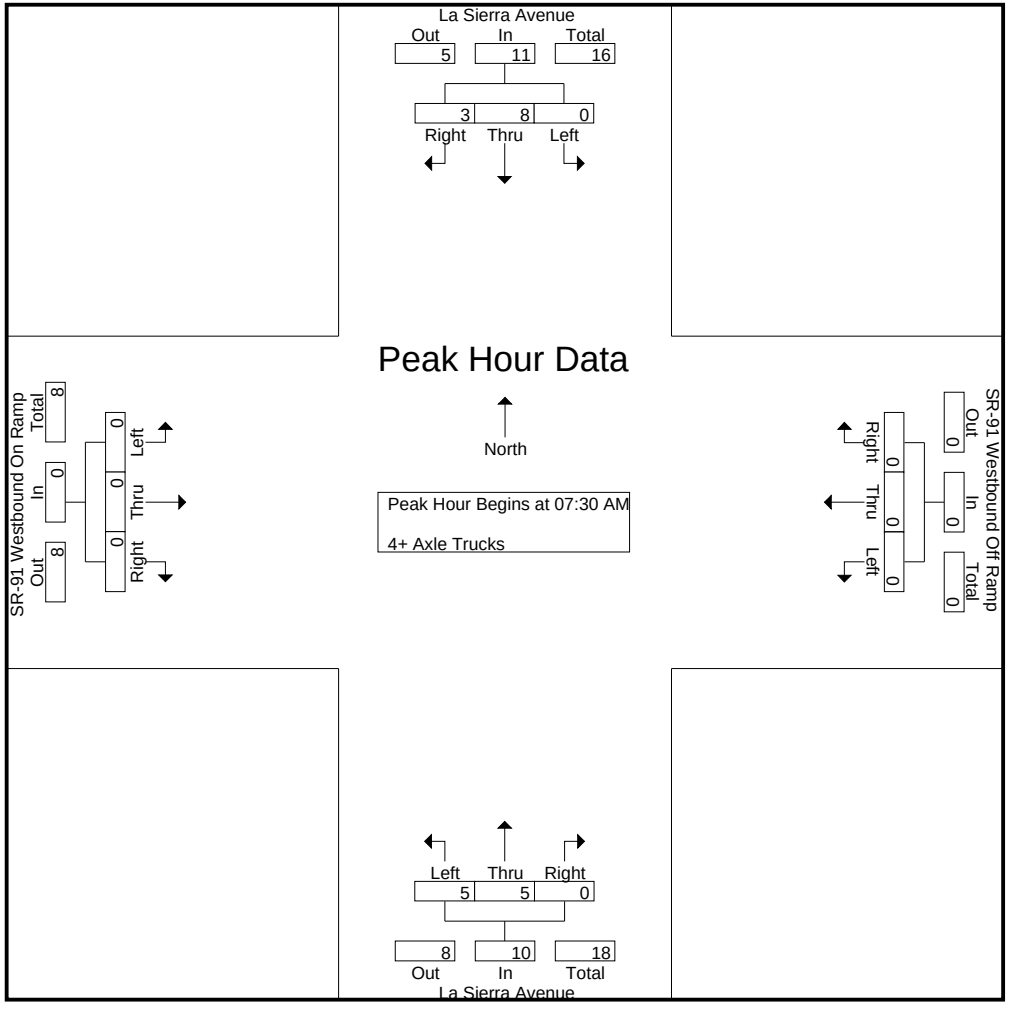

Counts Unlimited, Inc.
PO Box 1178
Corona, CA 92878
(951) 268-6268

City of Riverside
N/S: La Sierra Avenue
E/W: SR-91 Westbound Ramps
Weather: Clear

File Name : 01_RIV_LS_91W AM
Site Code : 05124383
Start Date : 4/25/2024

	La Sierra Avenue Southbound				SR-91 Westbound Off Ramp Westbound				La Sierra Avenue Northbound				SR-91 Westbound On Ramp Eastbound				
Start Time	Left	Thru	Right	App. Total	Left	Thru	Right	App. Total	Left	Thru	Right	App. Total	Left	Thru	Right	App. Total	Int. Total
Peak Hour Analysis From 07:30 AM to 08:15 AM - Peak 1 of 1																	
Peak Hour for Each Approach Begins at:																	
	07:30 AM				07:30 AM				07:30 AM				07:30 AM				
+0 mins.	0	**2**	**1**	**3**	0	0	0	0	1	**2**	0	**3**	0	0	0	0	
+15 mins.	0	2	0	2	0	0	0	0	**2**	1	0	3	0	0	0	0	
+30 mins.	0	2	1	3	0	0	0	0	0	2	0	2	0	0	0	0	
+45 mins.	0	2	1	3	0	0	0	0	2	0	0	2	0	0	0	0	
Total Volume	0	8	3	11	0	0	0	0	5	5	0	10	0	0	0	0	
% App. Total	0	72.7	27.3		0	0	0		50	50	0		0	0	0		
PHF	.000	1.000	.750	.917	.000	.000	.000	.000	.625	.625	.000	.833	.000	.000	.000	.000	

Counts Unlimited, Inc.
PO Box 1178
Corona, CA 92878
(951) 268-6268

City of Riverside
N/S: La Sierra Avenue
E/W: SR-91 Westbound Ramps
Weather: Clear

File Name : 01_RIV_LS_91W PM
Site Code : 05124383
Start Date : 4/25/2024
Page No : 1

Groups Printed- Passenger Vehicles - Large 2 Axle Vehicles - 3 Axle Vehicles - 4+ Axle Trucks

	La Sierra Avenue Southbound					SR-91 Westbound Off Ramp Westbound					La Sierra Avenue Northbound					SR-91 Westbound On Ramp Eastbound							
Start Time	Left	Thru	Right	RTOR	App. Total	Left	Thru	Right	RTOR	App. Total	Left	Thru	Right	RTOR	App. Total	Left	Thru	Right	RTOR	App. Total	Exclu. Total	Inclu. Total	Int. Total
04:00 PM	0	346	62	18	408	97	0	87	47	184	107	215	0	0	322	0	0	0	0	0	65	914	979
04:15 PM	0	299	47	19	346	60	0	85	48	145	113	207	0	0	320	0	0	0	0	0	67	811	878
04:30 PM	0	320	86	15	406	82	0	98	44	180	98	218	0	0	316	0	0	0	0	0	59	902	961
04:45 PM	0	286	61	9	347	105	0	118	53	223	110	199	0	0	309	0	0	0	0	0	62	879	941
Total	0	1251	256	61	1507	344	0	388	192	732	428	839	0	0	1267	0	0	0	0	0	253	3506	3759
05:00 PM	0	366	71	17	437	117	2	148	46	267	90	208	0	0	298	0	0	0	0	0	63	1002	1065
05:15 PM	0	363	73	23	436	121	0	135	54	256	101	205	0	0	306	0	0	0	0	0	77	998	1075
05:30 PM	0	351	62	23	413	112	0	122	52	234	98	243	0	0	341	0	0	0	0	0	75	988	1063
05:45 PM	0	274	50	20	324	108	0	121	55	229	83	242	0	0	325	0	0	0	0	0	75	878	953
Total	0	1354	256	83	1610	458	2	526	207	986	372	898	0	0	1270	0	0	0	0	0	290	3866	4156
Grand Total	0	2605	512	144	3117	802	2	914	399	1718	800	1737	0	0	2537	0	0	0	0	0	543	7372	7915
Apprch %	0	83.6	16.4			46.7	0.1	53.2			31.5	68.5	0			0	0	0					
Total %	0	35.3	6.9		42.3	10.9	0	12.4		23.3	10.9	23.6	0		34.4	0	0	0		0	6.9	93.1	
Passenger Vehicles	0	2571	511		3226	791	2	910		2100	779	1716	0		2495	0	0	0		0	0	0	7821
% Passenger Vehicles	0	98.7	99.8	100	98.9	98.6	100	99.6	99.5	99.2	97.4	98.8	0	0	98.3	0	0	0	0	0	0	0	98.8
Large 2 Axle Vehicles	0	20	1		21	6	0	1		7	10	15	0		25	0	0	0		0	0	0	53
% Large 2 Axle Vehicles	0	0.8	0.2	0	0.6	0.7	0	0.1	0	0.3	1.2	0.9	0	0	1	0	0	0	0	0	0	0	0.7
3 Axle Vehicles	0	5	0		5	1	0	0		1	3	2	0		5	0	0	0		0	0	0	11
% 3 Axle Vehicles	0	0.2	0	0	0.2	0.1	0	0	0	0	0.4	0.1	0	0	0.2	0	0	0	0	0	0	0	0.1
4+ Axle Trucks	0	9	0		9	4	0	3		9	8	4	0		12	0	0	0		0	0	0	30
% 4+ Axle Trucks	0	0.3	0	0	0.3	0.5	0	0.3	0.5	0.4	1	0.2	0	0	0.5	0	0	0	0	0	0	0	0.4

	La Sierra Avenue Southbound				SR-91 Westbound Off Ramp Westbound				La Sierra Avenue Northbound				SR-91 Westbound On Ramp Eastbound				
Start Time	Left	Thru	Right	App. Total	Left	Thru	Right	App. Total	Left	Thru	Right	App. Total	Left	Thru	Right	App. Total	Int. Total
Peak Hour Analysis From 04:00 PM to 05:45 PM - Peak 1 of 1																	
Peak Hour for Entire Intersection Begins at 04:45 PM																	
04:45 PM	0	286	61	347	105	0	118	223	**110**	199	0	309	0	0	0	0	879
05:00 PM	0	**366**	71	**437**	117	**2**	**148**	**267**	90	208	0	298	0	0	0	0	**1002**
05:15 PM	0	363	**73**	436	**121**	0	135	256	101	205	0	306	0	0	0	0	998
05:30 PM	0	351	62	413	112	0	122	234	98	**243**	0	**341**	0	0	0	0	988
Total Volume	0	1366	267	1633	455	2	523	980	399	855	0	1254	0	0	0	0	3867
% App. Total	0	83.6	16.4		46.4	0.2	53.4		31.8	68.2	0		0	0	0		
PHF	.000	.933	.914	.934	.940	.250	.883	.918	.907	.880	.000	.919	.000	.000	.000	.000	.965

Counts Unlimited, Inc.
PO Box 1178
Corona, CA 92878
(951) 268-6268

City of Riverside
N/S: La Sierra Avenue
E/W: SR-91 Westbound Ramps
Weather: Clear

File Name : 01_RIV_LS_91W PM
Site Code : 05124383
Start Date : 4/25/2024
Page No : 2

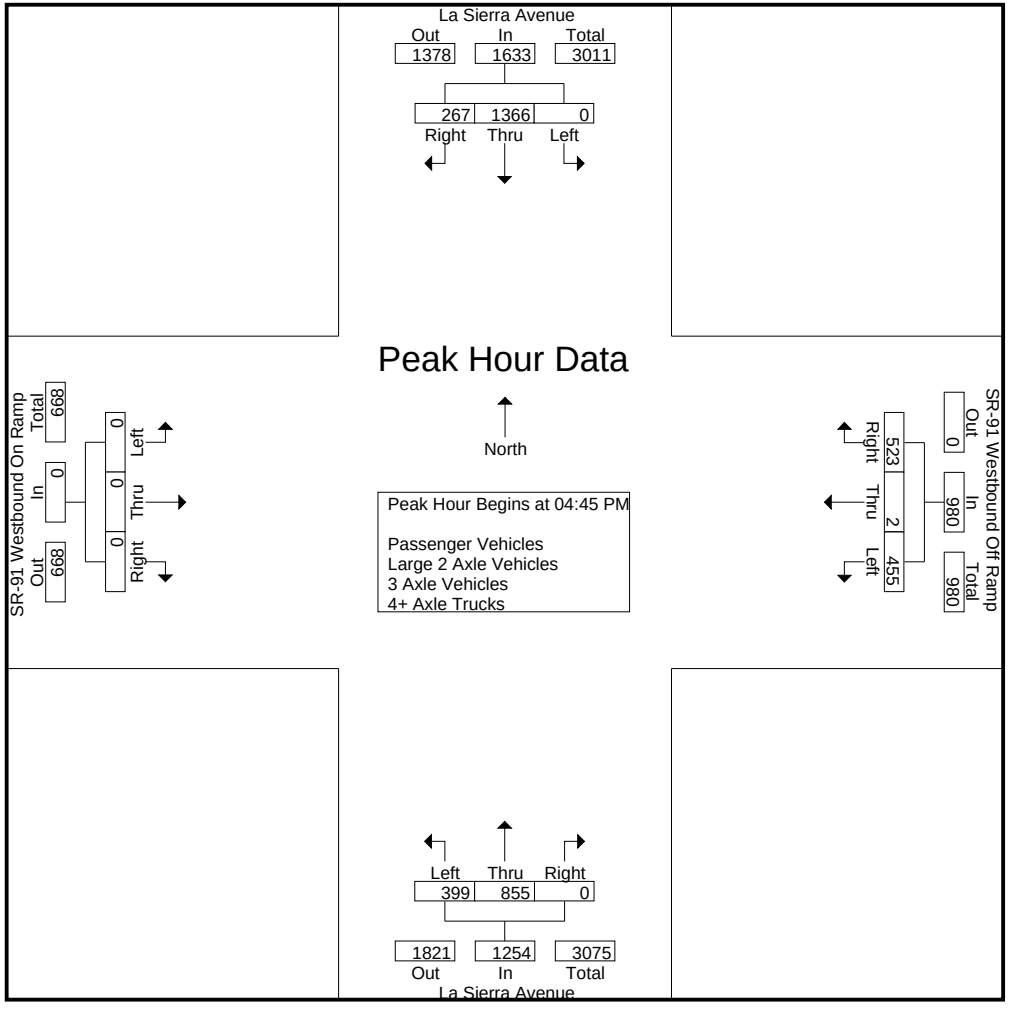

Counts Unlimited, Inc.
PO Box 1178
Corona, CA 92878
(951) 268-6268

City of Riverside
N/S: La Sierra Avenue
E/W: SR-91 Westbound Ramps
Weather: Clear

File Name : 01_RIV_LS_91W PM
Site Code : 05124383
Start Date : 4/25/2024

	La Sierra Avenue Southbound				SR-91 Westbound Off Ramp Westbound				La Sierra Avenue Northbound				SR-91 Westbound On Ramp Eastbound				
Start Time	Left	Thru	Right	App. Total	Left	Thru	Right	App. Total	Left	Thru	Right	App. Total	Left	Thru	Right	App. Total	Int. Total
Peak Hour Analysis From 04:00 PM to 05:45 PM - Peak 1 of 1																	
Peak Hour for Each Approach Begins at:																	
	04:45 PM				05:00 PM				05:00 PM				04:00 PM				
+0 mins.	0	286	61	347	117	**2**	**148**	**267**	90	208	0	298	0	0	0	0	
+15 mins.	0	**366**	71	**437**	**121**	0	135	256	**101**	205	0	306	0	0	0	0	
+30 mins.	0	363	**73**	436	112	0	122	234	98	**243**	0	**341**	0	0	0	0	
+45 mins.	0	351	62	413	108	0	121	229	83	242	0	325	0	0	0	0	
Total Volume	0	1366	267	1633	458	2	526	986	372	898	0	1270	0	0	0	0	
% App. Total	0	83.6	16.4		46.5	0.2	53.3		29.3	70.7	0		0	0	0		
PHF	.000	.933	.914	.934	.946	.250	.889	.923	.921	.924	.000	.931	.000	.000	.000	.000	

Counts Unlimited, Inc.
PO Box 1178
Corona, CA 92878
(951) 268-6268

City of Riverside
N/S: La Sierra Avenue
E/W: SR-91 Westbound Ramps
Weather: Clear

File Name : 01_RIV_LS_91W PM
Site Code : 05124383
Start Date : 4/25/2024

Groups Printed- Passenger Vehicles

	La Sierra Avenue Southbound					SR-91 Westbound Off Ramp Westbound					La Sierra Avenue Northbound					SR-91 Westbound On Ramp Eastbound							
Start Time	Left	Thru	Right	RTOR	App. Total	Left	Thru	Right	RTOR	App. Total	Left	Thru	Right	RTOR	App. Total	Left	Thru	Right	RTOR	App. Total	Exclu. Total	Inclu. Total	Int. Total
04:00 PM	0	340	62	18	402	97	0	86	46	183	106	213	0	0	319	0	0	0	0	0	64	904	968
04:15 PM	0	293	46	19	339	60	0	85	48	145	113	206	0	0	319	0	0	0	0	0	67	803	870
04:30 PM	0	319	86	15	405	82	0	98	44	180	96	213	0	0	309	0	0	0	0	0	59	894	953
04:45 PM	0	283	61	9	344	102	0	117	52	219	103	197	0	0	300	0	0	0	0	0	61	863	924
Total	0	1235	255	61	1490	341	0	386	190	727	418	829	0	0	1247	0	0	0	0	0	251	3464	3715
05:00 PM	0	362	71	17	433	115	2	147	46	264	86	206	0	0	292	0	0	0	0	0	63	989	1052
05:15 PM	0	356	73	23	429	117	0	135	54	252	96	202	0	0	298	0	0	0	0	0	77	979	1056
05:30 PM	0	347	62	23	409	112	0	121	52	233	96	240	0	0	336	0	0	0	0	0	75	978	1053
05:45 PM	0	271	50	20	321	106	0	121	55	227	83	239	0	0	322	0	0	0	0	0	75	870	945
Total	0	1336	256	83	1592	450	2	524	207	976	361	887	0	0	1248	0	0	0	0	0	290	3816	4106
Grand Total	0	2571	511	144	3082	791	2	910	397	1703	779	1716	0	0	2495	0	0	0	0	0	541	7280	7821
Apprch %	0	83.4	16.6			46.4	0.1	53.4			31.2	68.8	0			0	0	0					
Total %	0	35.3	7		42.3	10.9	0	12.5		23.4	10.7	23.6	0		34.3	0	0	0		0	6.9	93.1	

	La Sierra Avenue Southbound				SR-91 Westbound Off Ramp Westbound				La Sierra Avenue Northbound				SR-91 Westbound On Ramp Eastbound				
Start Time	Left	Thru	Right	App. Total	Left	Thru	Right	App. Total	Left	Thru	Right	App. Total	Left	Thru	Right	App. Total	Int. Total
Peak Hour Analysis From 04:45 PM to 05:30 PM - Peak 1 of 1																	
Peak Hour for Entire Intersection Begins at 04:45 PM																	
04:45 PM	0	283	61	344	102	0	117	219	**103**	197	0	300	0	0	0	0	863
05:00 PM	0	**362**	71	**433**	115	**2**	**147**	**264**	86	206	0	292	0	0	0	0	**989**
05:15 PM	0	356	**73**	429	**117**	0	135	252	96	202	0	298	0	0	0	0	979
05:30 PM	0	347	62	409	112	0	121	233	96	**240**	0	**336**	0	0	0	0	978
Total Volume	0	1348	267	1615	446	2	520	968	381	845	0	1226	0	0	0	0	3809
% App. Total	0	83.5	16.5		46.1	0.2	53.7		31.1	68.9	0		0	0	0		
PHF	.000	.931	.914	.932	.953	.250	.884	.917	.925	.880	.000	.912	.000	.000	.000	.000	.963

Counts Unlimited, Inc.
PO Box 1178
Corona, CA 92878
(951) 268-6268

City of Riverside
N/S: La Sierra Avenue
E/W: SR-91 Westbound Ramps
Weather: Clear

File Name : 01_RIV_LS_91W PM
Site Code : 05124383
Start Date : 4/25/2024
Page No : 2

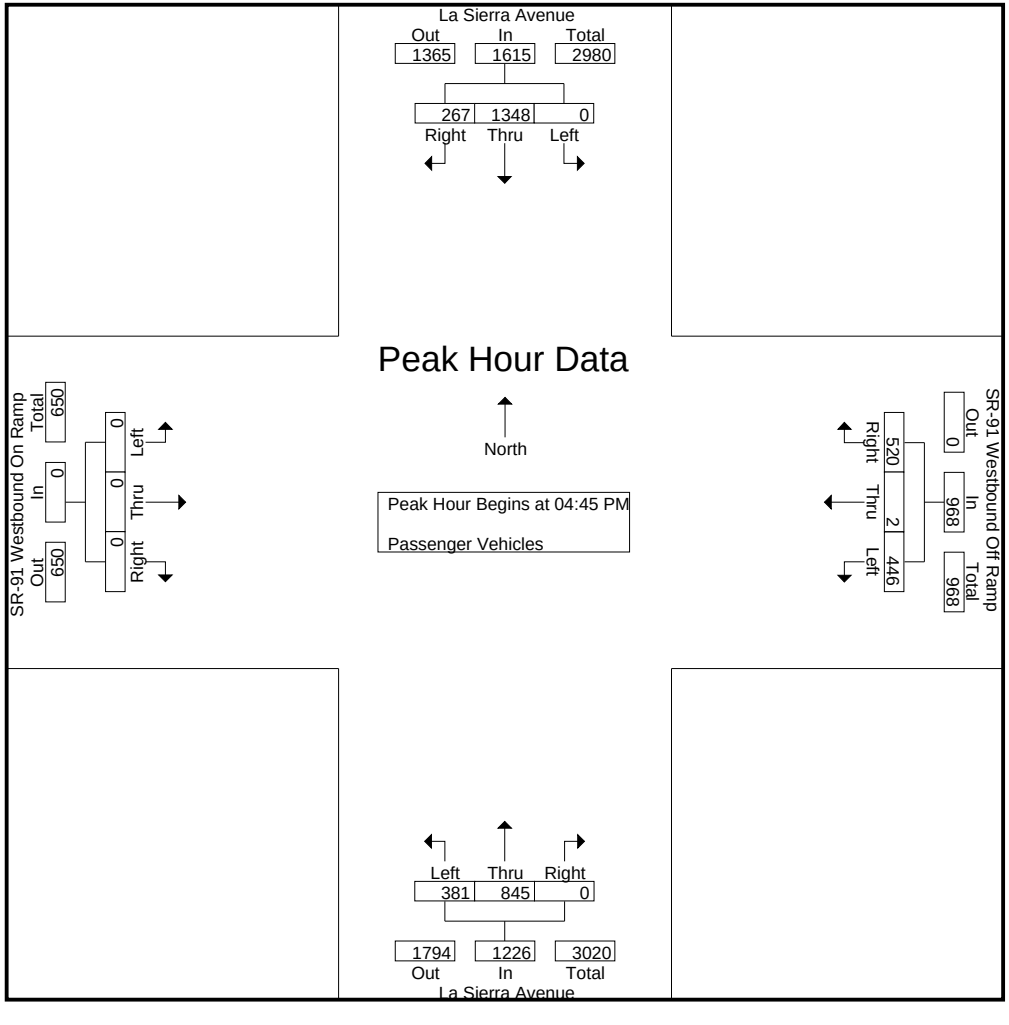

Counts Unlimited, Inc.
PO Box 1178
Corona, CA 92878
(951) 268-6268

City of Riverside
N/S: La Sierra Avenue
E/W: SR-91 Westbound Ramps
Weather: Clear

File Name : 01_RIV_LS_91W PM
Site Code : 05124383
Start Date : 4/25/2024

	La Sierra Avenue Southbound				SR-91 Westbound Off Ramp Westbound				La Sierra Avenue Northbound				SR-91 Westbound On Ramp Eastbound				
Start Time	Left	Thru	Right	App. Total	Left	Thru	Right	App. Total	Left	Thru	Right	App. Total	Left	Thru	Right	App. Total	Int. Total
Peak Hour Analysis From 04:45 PM to 05:30 PM - Peak 1 of 1																	
Peak Hour for Each Approach Begins at:																	
	04:45 PM				04:45 PM				04:45 PM				04:45 PM				
+0 mins.	0	283	61	344	102	0	117	219	**103**	197	0	300	0	0	0	0	
+15 mins.	0	**362**	71	**433**	115	**2**	**147**	**264**	86	206	0	292	0	0	0	0	
+30 mins.	0	356	**73**	429	**117**	0	135	252	96	202	0	298	0	0	0	0	
+45 mins.	0	347	62	409	112	0	121	233	96	**240**	0	**336**	0	0	0	0	
Total Volume	0	1348	267	1615	446	2	520	968	381	845	0	1226	0	0	0	0	
% App. Total	0	83.5	16.5		46.1	0.2	53.7		31.1	68.9	0		0	0	0		
PHF	.000	.931	.914	.932	.953	.250	.884	.917	.925	.880	.000	.912	.000	.000	.000	.000	

Counts Unlimited, Inc.
PO Box 1178
Corona, CA 92878
(951) 268-6268

City of Riverside
N/S: La Sierra Avenue
E/W: SR-91 Westbound Ramps
Weather: Clear

File Name : 01_RIV_LS_91W PM
Site Code : 05124383
Start Date : 4/25/2024
Page No : 1

Groups Printed- Large 2 Axle Vehicles

	La Sierra Avenue Southbound					SR-91 Westbound Off Ramp Westbound					La Sierra Avenue Northbound					SR-91 Westbound On Ramp Eastbound							
Start Time	Left	Thru	Right	RTOR	App. Total	Left	Thru	Right	RTOR	App. Total	Left	Thru	Right	RTOR	App. Total	Left	Thru	Right	RTOR	App. Total	Exclu. Total	Inclu. Total	Int. Total
04:00 PM	0	2	0	0	2	0	0	0	0	0	1	2	0	0	3	0	0	0	0	0	0	5	5
04:15 PM	0	3	1	0	4	0	0	0	0	0	0	1	0	0	1	0	0	0	0	0	0	5	5
04:30 PM	0	0	0	0	0	0	0	0	0	0	2	2	0	0	4	0	0	0	0	0	0	4	4
04:45 PM	0	1	0	0	1	1	0	0	0	1	5	2	0	0	7	0	0	0	0	0	0	9	9
Total	0	6	1	0	7	1	0	0	0	1	8	7	0	0	15	0	0	0	0	0	0	23	23
05:00 PM	0	4	0	0	4	1	0	0	0	1	0	2	0	0	2	0	0	0	0	0	0	7	7
05:15 PM	0	5	0	0	5	3	0	0	0	3	1	1	0	0	2	0	0	0	0	0	0	10	10
05:30 PM	0	2	0	0	2	0	0	1	0	1	1	2	0	0	3	0	0	0	0	0	0	6	6
05:45 PM	0	3	0	0	3	1	0	0	0	1	0	3	0	0	3	0	0	0	0	0	0	7	7
Total	0	14	0	0	14	5	0	1	0	6	2	8	0	0	10	0	0	0	0	0	0	30	30
Grand Total	0	20	1	0	21	6	0	1	0	7	10	15	0	0	25	0	0	0	0	0	0	53	53
Apprch %	0	95.2	4.8			85.7	0	14.3			40	60	0			0	0	0					
Total %	0	37.7	1.9		39.6	11.3	0	1.9		13.2	18.9	28.3	0		47.2	0	0	0		0	0	100	

	La Sierra Avenue Southbound				SR-91 Westbound Off Ramp Westbound				La Sierra Avenue Northbound				SR-91 Westbound On Ramp Eastbound				
Start Time	Left	Thru	Right	App. Total	Left	Thru	Right	App. Total	Left	Thru	Right	App. Total	Left	Thru	Right	App. Total	Int. Total
Peak Hour Analysis From 04:45 PM to 05:30 PM - Peak 1 of 1																	
Peak Hour for Entire Intersection Begins at 04:45 PM																	
04:45 PM	0	1	0	1	1	0	0	1	**5**	**2**	0	**7**	0	0	0	0	9
05:00 PM	0	4	0	4	1	0	0	1	0	2	0	2	0	0	0	0	7
05:15 PM	0	**5**	0	**5**	**3**	0	0	**3**	1	1	0	2	0	0	0	0	**10**
05:30 PM	0	2	0	2	0	0	**1**	1	1	2	0	3	0	0	0	0	6
Total Volume	0	12	0	12	5	0	1	6	7	7	0	14	0	0	0	0	32
% App. Total	0	100	0		83.3	0	16.7		50	50	0		0	0	0		
PHF	.000	.600	.000	.600	.417	.000	.250	.500	.350	.875	.000	.500	.000	.000	.000	.000	.800

Counts Unlimited, Inc.
PO Box 1178
Corona, CA 92878
(951) 268-6268

City of Riverside
N/S: La Sierra Avenue
E/W: SR-91 Westbound Ramps
Weather: Clear

File Name : 01_RIV_LS_91W PM
Site Code : 05124383
Start Date : 4/25/2024
Page No : 2

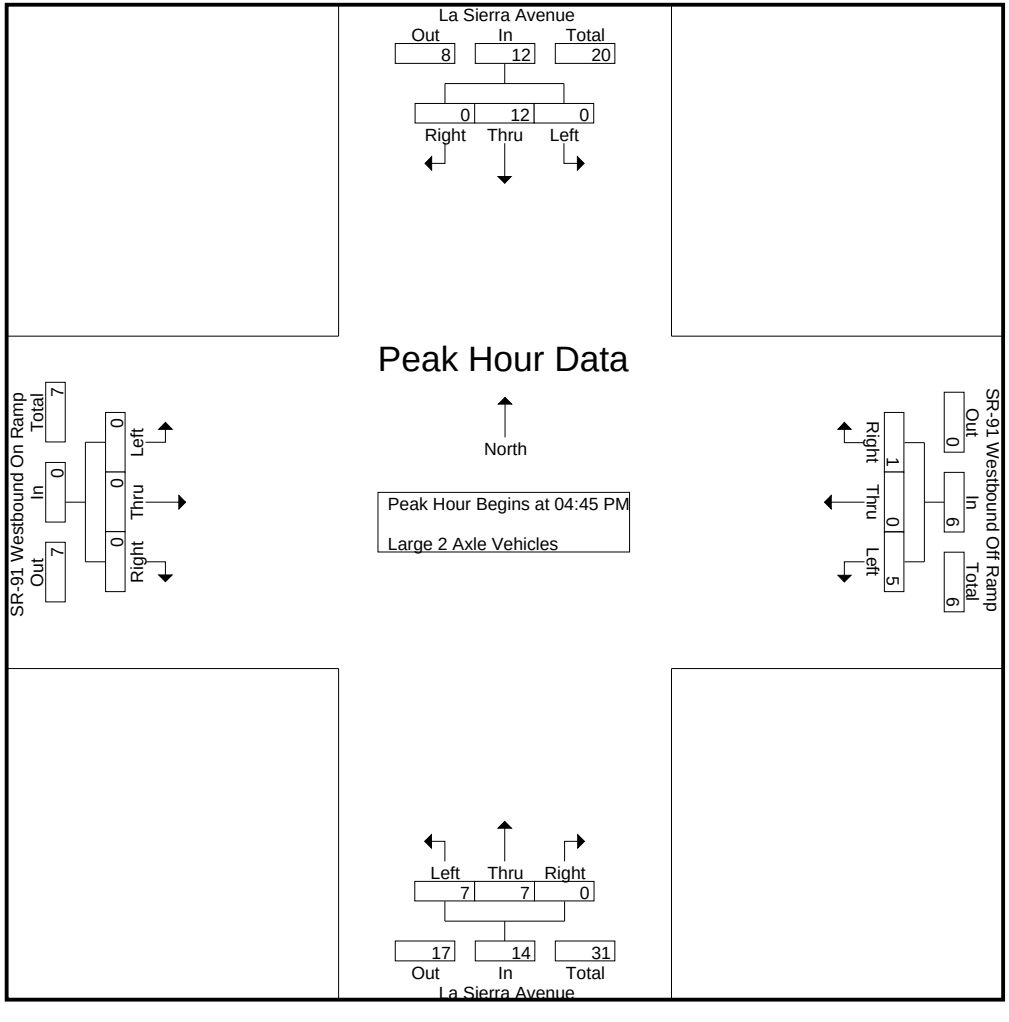

Counts Unlimited, Inc.
PO Box 1178
Corona, CA 92878
(951) 268-6268

City of Riverside
N/S: La Sierra Avenue
E/W: SR-91 Westbound Ramps
Weather: Clear

File Name : 01_RIV_LS_91W PM
Site Code : 05124383
Start Date : 4/25/2024

	La Sierra Avenue Southbound				SR-91 Westbound Off Ramp Westbound				La Sierra Avenue Northbound				SR-91 Westbound On Ramp Eastbound				
Start Time	Left	Thru	Right	App. Total	Left	Thru	Right	App. Total	Left	Thru	Right	App. Total	Left	Thru	Right	App. Total	Int. Total
Peak Hour Analysis From 04:45 PM to 05:30 PM - Peak 1 of 1																	
Peak Hour for Each Approach Begins at:																	
	04:45 PM				04:45 PM				04:45 PM				04:45 PM				
+0 mins.	0	1	0	1	1	0	0	1	**5**	**2**	0	**7**	0	0	0	0	
+15 mins.	0	4	0	4	1	0	0	1	0	2	0	2	0	0	0	0	
+30 mins.	0	**5**	0	**5**	**3**	0	0	**3**	1	1	0	2	0	0	0	0	
+45 mins.	0	2	0	2	0	0	**1**	1	1	2	0	3	0	0	0	0	
Total Volume	0	12	0	12	5	0	1	6	7	7	0	14	0	0	0	0	
% App. Total	0	100	0		83.3	0	16.7		50	50	0		0	0	0		
PHF	.000	.600	.000	.600	.417	.000	.250	.500	.350	.875	.000	.500	.000	.000	.000	.000	

Counts Unlimited, Inc.
PO Box 1178
Corona, CA 92878
(951) 268-6268

City of Riverside
N/S: La Sierra Avenue
E/W: SR-91 Westbound Ramps
Weather: Clear

File Name : 01_RIV_LS_91W PM
Site Code : 05124383
Start Date : 4/25/2024
Page No : 1

Groups Printed- 3 Axle Vehicles

	La Sierra Avenue Southbound					SR-91 Westbound Off Ramp Westbound					La Sierra Avenue Northbound					SR-91 Westbound On Ramp Eastbound							
Start Time	Left	Thru	Right	RTOR	App. Total	Left	Thru	Right	RTOR	App. Total	Left	Thru	Right	RTOR	App. Total	Left	Thru	Right	RTOR	App. Total	Exclu. Total	Inclu. Total	Int. Total
04:00 PM	0	1	0	0	1	0	0	0	0	0	0	0	0	0	0	0	0	0	0	0	0	1	1
04:15 PM	0	1	0	0	1	0	0	0	0	0	0	0	0	0	0	0	0	0	0	0	0	1	1
04:30 PM	0	1	0	0	1	0	0	0	0	0	0	1	0	0	1	0	0	0	0	0	0	2	2
04:45 PM	0	1	0	0	1	0	0	0	0	0	1	0	0	0	1	0	0	0	0	0	0	2	2
Total	0	4	0	0	4	0	0	0	0	0	1	1	0	0	2	0	0	0	0	0	0	6	6
05:00 PM	0	0	0	0	0	0	0	0	0	0	1	0	0	0	1	0	0	0	0	0	0	1	1
05:15 PM	0	0	0	0	0	1	0	0	0	1	1	0	0	0	1	0	0	0	0	0	0	2	2
05:30 PM	0	1	0	0	1	0	0	0	0	0	0	1	0	0	1	0	0	0	0	0	0	2	2
05:45 PM	0	0	0	0	0	0	0	0	0	0	0	0	0	0	0	0	0	0	0	0	0	0	0
Total	0	1	0	0	1	1	0	0	0	1	2	1	0	0	3	0	0	0	0	0	0	5	5
Grand Total	0	5	0	0	5	1	0	0	0	1	3	2	0	0	5	0	0	0	0	0	0	11	11
Apprch %	0	100	0			100	0	0			60	40	0			0	0	0					
Total %	0	45.5	0		45.5	9.1	0	0		9.1	27.3	18.2	0		45.5	0	0	0		0	0	100	

	La Sierra Avenue Southbound				SR-91 Westbound Off Ramp Westbound				La Sierra Avenue Northbound				SR-91 Westbound On Ramp Eastbound				
Start Time	Left	Thru	Right	App. Total	Left	Thru	Right	App. Total	Left	Thru	Right	App. Total	Left	Thru	Right	App. Total	Int. Total
Peak Hour Analysis From 04:45 PM to 05:30 PM - Peak 1 of 1																	
Peak Hour for Entire Intersection Begins at 04:45 PM																	
04:45 PM	0	**1**	0	**1**	0	0	0	0	**1**	0	0	**1**	0	0	0	0	**2**
05:00 PM	0	0	0	0	0	0	0	0	1	0	0	1	0	0	0	0	1
05:15 PM	0	0	0	0	**1**	0	0	**1**	1	0	0	1	0	0	0	0	2
05:30 PM	0	1	0	1	0	0	0	0	0	**1**	0	1	0	0	0	0	2
Total Volume	0	2	0	2	1	0	0	1	3	1	0	4	0	0	0	0	7
% App. Total	0	100	0		100	0	0		75	25	0		0	0	0		
PHF	.000	.500	.000	.500	.250	.000	.000	.250	.750	.250	.000	1.00	.000	.000	.000	.000	.875

Counts Unlimited, Inc.
PO Box 1178
Corona, CA 92878
(951) 268-6268

City of Riverside
N/S: La Sierra Avenue
E/W: SR-91 Westbound Ramps
Weather: Clear

File Name : 01_RIV_LS_91W PM
Site Code : 05124383
Start Date : 4/25/2024
Page No : 2

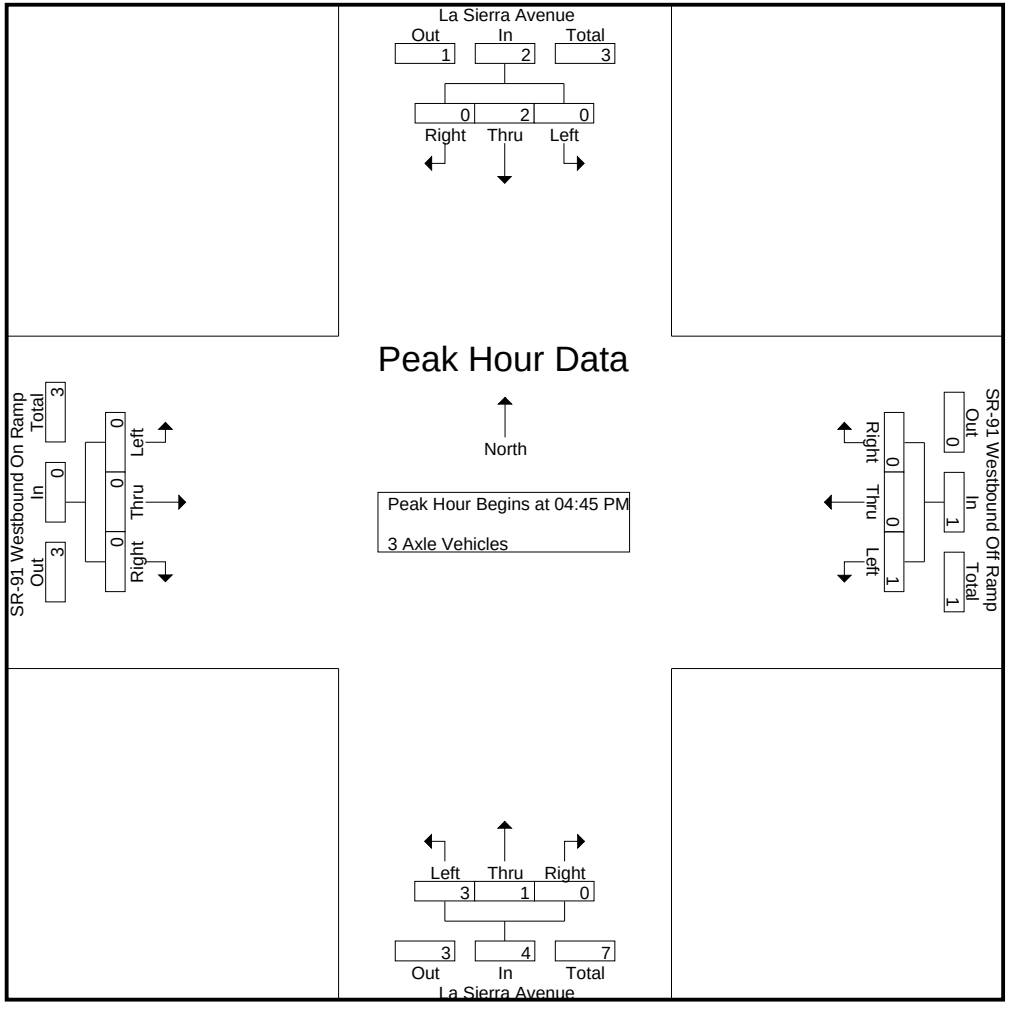

Counts Unlimited, Inc.
PO Box 1178
Corona, CA 92878
(951) 268-6268

City of Riverside
N/S: La Sierra Avenue
E/W: SR-91 Westbound Ramps
Weather: Clear

File Name : 01_RIV_LS_91W PM
Site Code : 05124383
Start Date : 4/25/2024

	La Sierra Avenue Southbound				SR-91 Westbound Off Ramp Westbound				La Sierra Avenue Northbound				SR-91 Westbound On Ramp Eastbound				
Start Time	Left	Thru	Right	App. Total	Left	Thru	Right	App. Total	Left	Thru	Right	App. Total	Left	Thru	Right	App. Total	Int. Total
Peak Hour Analysis From 04:45 PM to 05:30 PM - Peak 1 of 1																	
Peak Hour for Each Approach Begins at:																	
	04:45 PM				04:45 PM				04:45 PM				04:45 PM				
+0 mins.	0	**1**	0	**1**	0	0	0	0	**1**	0	0	**1**	0	0	0	0	
+15 mins.	0	0	0	0	0	0	0	0	1	0	0	1	0	0	0	0	
+30 mins.	0	0	0	0	**1**	0	0	**1**	1	0	0	1	0	0	0	0	
+45 mins.	0	1	0	1	0	0	0	0	0	**1**	0	1	0	0	0	0	
Total Volume	0	2	0	2	1	0	0	1	3	1	0	4	0	0	0	0	
% App. Total	0	100	0		100	0	0		75	25	0		0	0	0		
PHF	.000	.500	.000	.500	.250	.000	.000	.250	.750	.250	.000	1.000	.000	.000	.000	.000	

Counts Unlimited, Inc.
PO Box 1178
Corona, CA 92878
(951) 268-6268

City of Riverside
N/S: La Sierra Avenue
E/W: SR-91 Westbound Ramps
Weather: Clear

File Name : 01_RIV_LS_91W PM
Site Code : 05124383
Start Date : 4/25/2024

Groups Printed- 4+ Axle Trucks

	La Sierra Avenue Southbound					SR-91 Westbound Off Ramp Westbound					La Sierra Avenue Northbound					SR-91 Westbound On Ramp Eastbound							
Start Time	Left	Thru	Right	RTOR	App. Total	Left	Thru	Right	RTOR	App. Total	Left	Thru	Right	RTOR	App. Total	Left	Thru	Right	RTOR	App. Total	Exclu. Total	Inclu. Total	Int. Total
04:00 PM	0	3	0	0	3	0	0	1	1	1	0	0	0	0	0	0	0	0	0	0	1	4	5
04:15 PM	0	2	0	0	2	0	0	0	0	0	0	0	0	0	0	0	0	0	0	0	0	2	2
04:30 PM	0	0	0	0	0	0	0	0	0	0	0	2	0	0	2	0	0	0	0	0	0	2	2
04:45 PM	0	1	0	0	1	2	0	1	1	3	1	0	0	0	1	0	0	0	0	0	1	5	6
Total	0	6	0	0	6	2	0	2	2	4	1	2	0	0	3	0	0	0	0	0	2	13	15
05:00 PM	0	0	0	0	0	1	0	1	0	2	3	0	0	0	3	0	0	0	0	0	0	5	5
05:15 PM	0	2	0	0	2	0	0	0	0	0	3	2	0	0	5	0	0	0	0	0	0	7	7
05:30 PM	0	1	0	0	1	0	0	0	0	0	1	0	0	0	1	0	0	0	0	0	0	2	2
05:45 PM	0	0	0	0	0	1	0	0	0	1	0	0	0	0	0	0	0	0	0	0	0	1	1
Total	0	3	0	0	3	2	0	1	0	3	7	2	0	0	9	0	0	0	0	0	0	15	15
Grand Total	0	9	0	0	9	4	0	3	2	7	8	4	0	0	12	0	0	0	0	0	2	28	30
Apprch %	0	100	0			57.1	0	42.9			66.7	33.3	0			0	0	0					
Total %	0	32.1	0		32.1	14.3	0	10.7		25	28.6	14.3	0		42.9	0	0	0		0	6.7	93.3	

	La Sierra Avenue Southbound				SR-91 Westbound Off Ramp Westbound				La Sierra Avenue Northbound				SR-91 Westbound On Ramp Eastbound				
Start Time	Left	Thru	Right	App. Total	Left	Thru	Right	App. Total	Left	Thru	Right	App. Total	Left	Thru	Right	App. Total	Int. Total
Peak Hour Analysis From 04:45 PM to 05:30 PM - Peak 1 of 1																	
Peak Hour for Entire Intersection Begins at 04:45 PM																	
04:45 PM	0	1	0	1	**2**	0	**1**	**3**	1	0	0	1	0	0	0	0	5
05:00 PM	0	0	0	0	1	0	1	2	**3**	0	0	3	0	0	0	0	5
05:15 PM	0	**2**	0	**2**	0	0	0	0	3	**2**	0	**5**	0	0	0	0	**7**
05:30 PM	0	1	0	1	0	0	0	0	1	0	0	1	0	0	0	0	2
Total Volume	0	4	0	4	3	0	2	5	8	2	0	10	0	0	0	0	19
% App. Total	0	100	0		60	0	40		80	20	0		0	0	0		
PHF	.000	.500	.000	.500	.375	.000	.500	.417	.667	.250	.000	.500	.000	.000	.000	.000	.679

Counts Unlimited, Inc.
PO Box 1178
Corona, CA 92878
(951) 268-6268

City of Riverside
N/S: La Sierra Avenue
E/W: SR-91 Westbound Ramps
Weather: Clear

File Name : 01_RIV_LS_91W PM
Site Code : 05124383
Start Date : 4/25/2024
Page No : 2

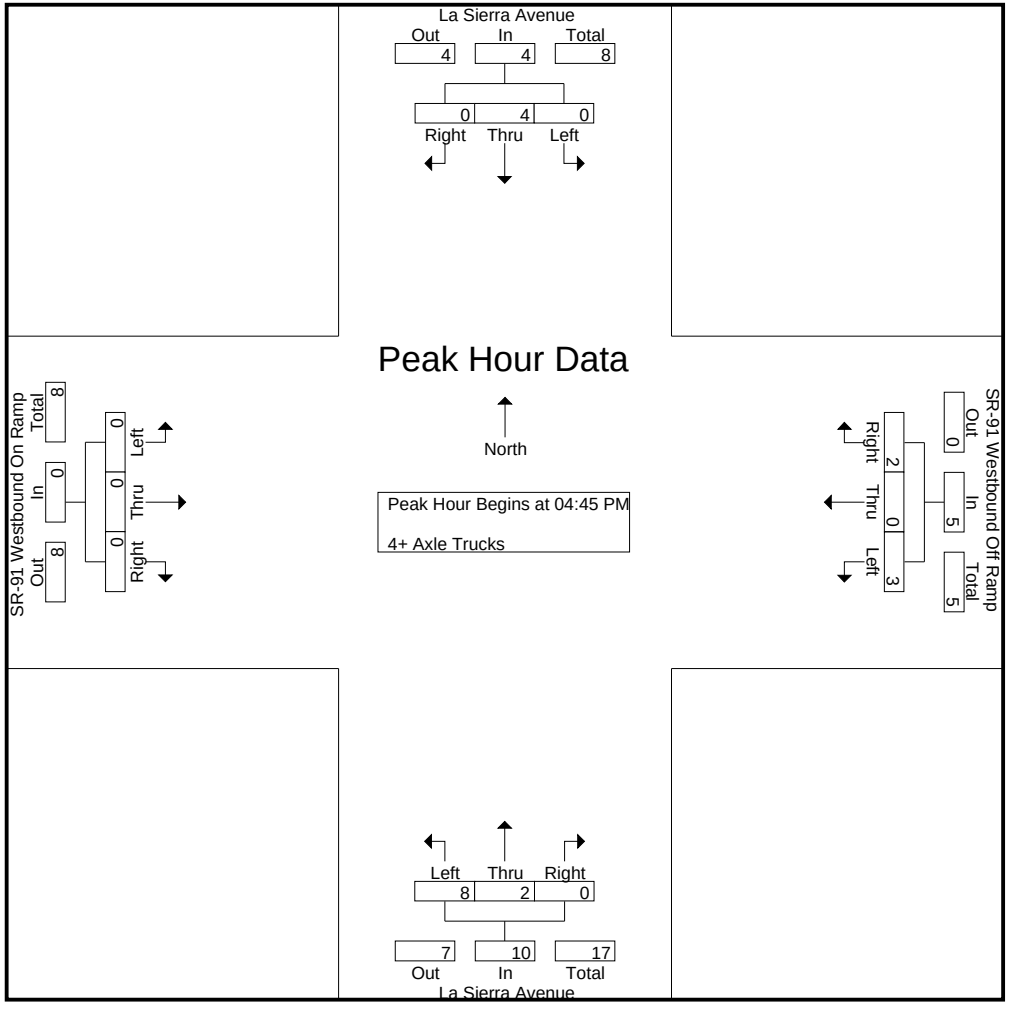

Counts Unlimited, Inc.
PO Box 1178
Corona, CA 92878
(951) 268-6268

City of Riverside
N/S: La Sierra Avenue
E/W: SR-91 Westbound Ramps
Weather: Clear

File Name : 01_RIV_LS_91W PM
Site Code : 05124383
Start Date : 4/25/2024

	La Sierra Avenue Southbound				SR-91 Westbound Off Ramp Westbound				La Sierra Avenue Northbound				SR-91 Westbound On Ramp Eastbound				
Start Time	Left	Thru	Right	App. Total	Left	Thru	Right	App. Total	Left	Thru	Right	App. Total	Left	Thru	Right	App. Total	Int. Total
Peak Hour Analysis From 04:45 PM to 05:30 PM - Peak 1 of 1																	
Peak Hour for Each Approach Begins at:																	
	04:45 PM				04:45 PM				04:45 PM				04:45 PM				
+0 mins.	0	1	0	1	**2**	0	**1**	**3**	1	0	0	1	0	0	0	0	
+15 mins.	0	0	0	0	1	0	1	2	**3**	0	0	3	0	0	0	0	
+30 mins.	0	**2**	0	**2**	0	0	0	0	3	**2**	0	**5**	0	0	0	0	
+45 mins.	0	1	0	1	0	0	0	0	1	0	0	1	0	0	0	0	
Total Volume	0	4	0	4	3	0	2	5	8	2	0	10	0	0	0	0	
% App. Total	0	100	0		60	0	40		80	20	0		0	0	0		
PHF	.000	.500	.000	.500	.375	.000	.500	.417	.667	.250	.000	.500	.000	.000	.000	.000	

Location: Riverside
N/S: La Sierra Avenue
E/W: SR-91 WB Ramps

Date: 4/25/2024
Day: Thursday

PEDESTRIANS

	North Leg La Sierra Avenue	East Leg SR-91 WB Ramps	South Leg La Sierra Avenue	West Leg SR-91 WB Ramps	
	Pedestrians	Pedestrians	Pedestrians	Pedestrians	
7:00 AM	0	1	0	0	1
7:15 AM	0	0	0	5	5
7:30 AM	0	0	0	1	1
7:45 AM	0	1	0	0	1
8:00 AM	0	1	0	2	3
8:15 AM	0	0	0	1	1
8:30 AM	0	0	0	0	0
8:45 AM	0	3	0	0	3
TOTAL VOLUMES:	0	6	0	9	15

	North Leg La Sierra Avenue	East Leg SR-91 WB Ramps	South Leg La Sierra Avenue	West Leg SR-91 WB Ramps	
	Pedestrians	Pedestrians	Pedestrians	Pedestrians	
4:00 PM	0	0	0	3	3
4:15 PM	0	2	0	3	5
4:30 PM	0	0	0	0	0
4:45 PM	0	0	0	1	1
5:00 PM	0	0	0	2	2
5:15 PM	0	3	0	0	3
5:30 PM	0	0	0	2	2
5:45 PM	0	0	0	2	2
TOTAL VOLUMES:	0	5	0	13	18

Counts Unlimited, Inc.
PO Box 1178
Corona, CA 92878
951-268-6268

Location: Riverside
N/S: La Sierra Avenue
E/W: SR-91 WB Ramps

Date: 4/25/2024
Day: Thursday

BICYCLES

	Southbound La Sierra Avenue			Westbound SR-91 WB Ramps			Northbound La Sierra Avenue			Eastbound SR-91 WB Ramps			
	Left	Thru	Right	Left	Thru	Right	Left	Thru	Right	Left	Thru	Right	
7:00 AM	0	0	0	0	0	0	0	0	0	0	0	0	0
7:15 AM	0	0	0	0	0	0	1	0	0	0	0	0	1
7:30 AM	0	2	0	0	0	0	1	0	0	0	0	0	3
7:45 AM	0	2	0	0	0	0	0	0	0	0	0	0	2
8:00 AM	0	0	0	0	0	0	0	0	0	0	0	0	0
8:15 AM	0	0	0	0	0	0	0	0	0	0	0	0	0
8:30 AM	0	0	0	0	0	0	0	0	0	0	0	0	0
8:45 AM	0	0	0	0	0	0	0	0	0	0	0	0	0
TOTAL VOLUMES:	0	4	0	0	0	0	2	0	0	0	0	0	6

	Southbound La Sierra Avenue			Westbound SR-91 WB Ramps			Northbound La Sierra Avenue			Eastbound SR-91 WB Ramps			
	Left	Thru	Right	Left	Thru	Right	Left	Thru	Right	Left	Thru	Right	
4:00 PM	0	0	0	0	0	0	0	0	0	0	0	0	0
4:15 PM	0	0	0	0	0	0	0	1	0	0	0	0	1
4:30 PM	0	1	0	0	0	0	0	0	0	0	0	0	1
4:45 PM	0	0	0	0	0	0	0	0	0	0	0	0	0
5:00 PM	0	0	0	0	0	0	0	1	1	0	0	0	2
5:15 PM	0	0	0	0	0	0	0	0	0	0	0	0	0
5:30 PM	0	1	0	0	0	0	0	1	0	0	0	0	2
5:45 PM	0	0	0	0	0	0	0	1	0	0	0	0	1
TOTAL VOLUMES:	0	2	0	0	0	0	0	4	1	0	0	0	7

Counts Unlimited, Inc.
PO Box 1178
Corona, CA 92878
(951) 268-6268

City of Riverside
N/S: La Sierra Avenue
E/W: SR-91 Eastbound Ramps
Weather: Clear

File Name : 02_RIV_LS_91E AM
Site Code : 05124383
Start Date : 4/25/2024
Page No : 1

Groups Printed- Passenger Vehicles - Large 2 Axle Vehicles - 3 Axle Vehicles - 4+ Axle Trucks

	La Sierra Avenue Southbound					SR-91 Eastbound On Ramp Westbound					La Sierra Avenue Northbound					SR-91 Eastbound Off Ramp Eastbound							
Start Time	Left	Thru	Right	RTOR	App. Total	Left	Thru	Right	RTOR	App. Total	Left	Thru	Right	RTOR	App. Total	Left	Thru	Right	RTOR	App. Total	Exclu. Total	Inclu. Total	Int. Total
07:00 AM	87	97	0	0	184	0	0	0	0	0	0	235	141	29	376	54	0	75	51	129	80	689	769
07:15 AM	122	139	0	0	261	0	0	0	0	0	0	275	125	28	400	80	0	71	48	151	76	812	888
07:30 AM	87	184	0	0	271	0	0	0	0	0	0	286	136	38	422	91	1	103	56	195	94	888	982
07:45 AM	79	263	0	0	342	0	0	0	0	0	0	375	98	30	473	115	0	90	53	205	83	1020	1103
Total	375	683	0	0	1058	0	0	0	0	0	0	1171	500	125	1671	340	1	339	208	680	333	3409	3742
08:00 AM	66	255	0	0	321	0	0	0	0	0	0	372	110	41	482	106	0	119	52	225	93	1028	1121
08:15 AM	70	193	0	0	263	0	0	0	0	0	0	423	111	37	534	98	0	87	57	185	94	982	1076
08:30 AM	83	139	0	0	222	0	0	0	0	0	0	291	109	24	400	70	0	96	60	166	84	788	872
08:45 AM	79	133	0	0	212	0	0	0	0	0	0	299	119	23	418	70	1	86	59	157	82	787	869
Total	298	720	0	0	1018	0	0	0	0	0	0	1385	449	125	1834	344	1	388	228	733	353	3585	3938
Grand Total	673	1403	0	0	2076	0	0	0	0	0	0	2556	949	250	3505	684	2	727	436	1413	686	6994	7680
Apprch %	32.4	67.6	0			0	0	0			0	72.9	27.1			48.4	0.1	51.5					
Total %	9.6	20.1	0		29.7	0	0	0		0	0	36.5	13.6		50.1	9.8	0	10.4		20.2	8.9	91.1	
Passenger Vehicles	655	1356	0		2011	0	0	0		0	0	2485	915		3642	676	2	672		1751	0	0	7404
% Passenger Vehicles	97.3	96.7	0	0	96.9	0	0	0	0	0	0	97.2	96.4	96.8	97	98.8	100	92.4	92	94.7	0	0	96.4
Large 2 Axle Vehicles	5	26	0		31	0	0	0		0	0	43	24		72	4	0	26		46	0	0	149
% Large 2 Axle Vehicles	0.7	1.9	0	0	1.5	0	0	0	0	0	0	1.7	2.5	2	1.9	0.6	0	3.6	3.7	2.5	0	0	1.9
3 Axle Vehicles	6	9	0		15	0	0	0		0	0	11	3		15	1	0	10		20	0	0	50
% 3 Axle Vehicles	0.9	0.6	0	0	0.7	0	0	0	0	0	0	0.4	0.3	0.4	0.4	0.1	0	1.4	2.1	1.1	0	0	0.7
4+ Axle Trucks	7	12	0		19	0	0	0		0	0	17	7		26	3	0	19		32	0	0	77
% 4+ Axle Trucks	1	0.9	0	0	0.9	0	0	0	0	0	0	0.7	0.7	0.8	0.7	0.4	0	2.6	2.3	1.7	0	0	1

	La Sierra Avenue Southbound				SR-91 Eastbound On Ramp Westbound				La Sierra Avenue Northbound				SR-91 Eastbound Off Ramp Eastbound				
Start Time	Left	Thru	Right	App. Total	Left	Thru	Right	App. Total	Left	Thru	Right	App. Total	Left	Thru	Right	App. Total	Int. Total
Peak Hour Analysis From 07:00 AM to 08:45 AM - Peak 1 of 1																	
Peak Hour for Entire Intersection Begins at 07:30 AM																	
07:30 AM	**87**	184	0	271	0	0	0	0	0	286	**136**	422	91	**1**	103	195	888
07:45 AM	79	**263**	0	**342**	0	0	0	0	0	375	98	473	**115**	0	90	205	1020
08:00 AM	66	255	0	321	0	0	0	0	0	372	110	482	106	0	**119**	**225**	**1028**
08:15 AM	70	193	0	263	0	0	0	0	0	**423**	111	**534**	98	0	87	185	982
Total Volume	302	895	0	1197	0	0	0	0	0	1456	455	1911	410	1	399	810	3918
% App. Total	25.2	74.8	0		0	0	0		0	76.2	23.8		50.6	0.1	49.3		
PHF	.868	.851	.000	.875	.000	.000	.000	.000	.000	.861	.836	.895	.891	.250	.838	.900	.953

Counts Unlimited, Inc.
PO Box 1178
Corona, CA 92878
(951) 268-6268

City of Riverside
N/S: La Sierra Avenue
E/W: SR-91 Eastbound Ramps
Weather: Clear

File Name : 02_RIV_LS_91E AM
Site Code : 05124383
Start Date : 4/25/2024
Page No : 2

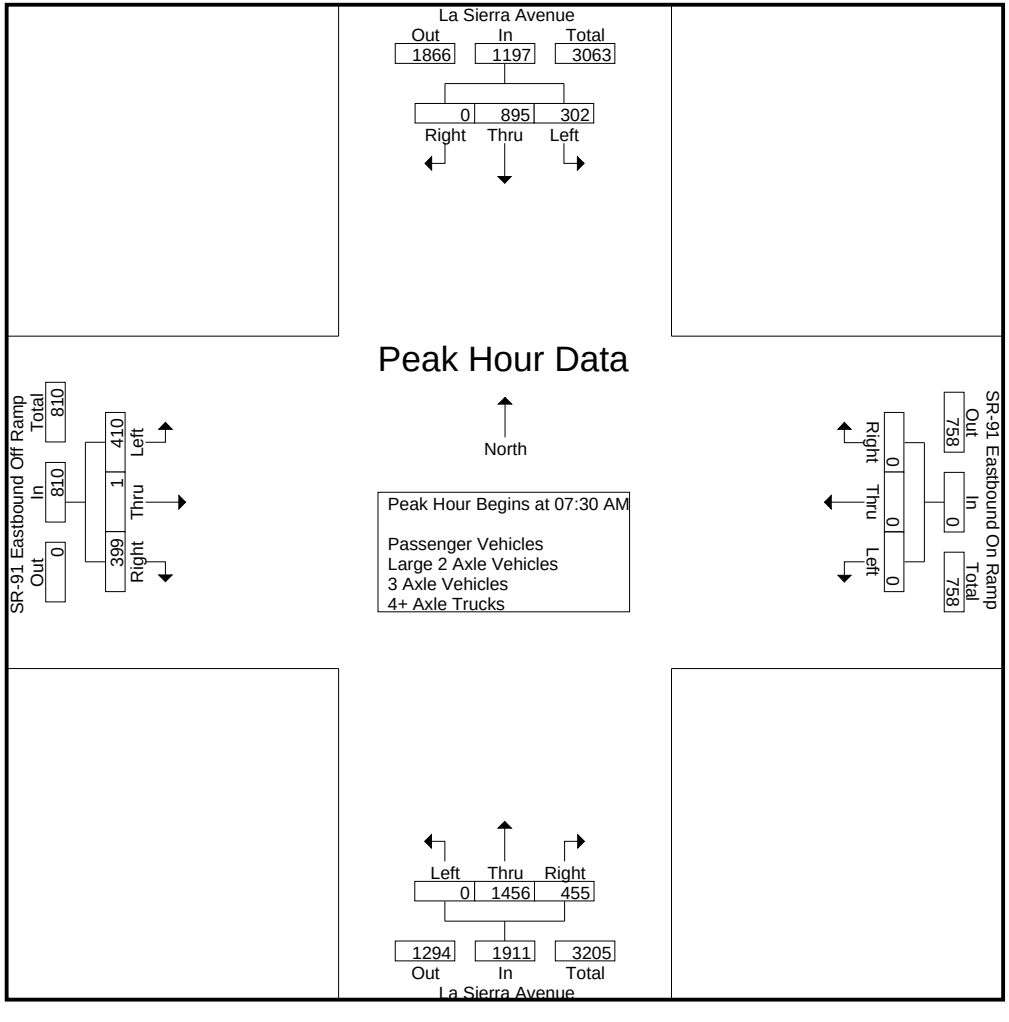

Counts Unlimited, Inc.
PO Box 1178
Corona, CA 92878
(951) 268-6268

City of Riverside
N/S: La Sierra Avenue
E/W: SR-91 Eastbound Ramps
Weather: Clear

File Name : 02_RIV_LS_91E AM
Site Code : 05124383
Start Date : 4/25/2024

	La Sierra Avenue Southbound				SR-91 Eastbound On Ramp Westbound				La Sierra Avenue Northbound				SR-91 Eastbound Off Ramp Eastbound				
Start Time	Left	Thru	Right	App. Total	Left	Thru	Right	App. Total	Left	Thru	Right	App. Total	Left	Thru	Right	App. Total	Int. Total
Peak Hour Analysis From 07:00 AM to 08:45 AM - Peak 1 of 1																	
Peak Hour for Each Approach Begins at:																	
	07:30 AM				07:00 AM				07:30 AM				07:30 AM				
+0 mins.	**87**	184	0	271	0	0	0	0	0	286	**136**	422	91	**1**	103	195	
+15 mins.	79	**263**	0	**342**	0	0	0	0	0	375	98	473	**115**	0	90	205	
+30 mins.	66	255	0	321	0	0	0	0	0	372	110	482	106	0	**119**	**225**	
+45 mins.	70	193	0	263	0	0	0	0	0	**423**	111	**534**	98	0	87	185	
Total Volume	302	895	0	1197	0	0	0	0	0	1456	455	1911	410	1	399	810	
% App. Total	25.2	74.8	0		0	0	0		0	76.2	23.8		50.6	0.1	49.3		
PHF	.868	.851	.000	.875	.000	.000	.000	.000	.000	.861	.836	.895	.891	.250	.838	.900	

Counts Unlimited, Inc.
PO Box 1178
Corona, CA 92878
(951) 268-6268

City of Riverside
N/S: La Sierra Avenue
E/W: SR-91 Eastbound Ramps
Weather: Clear

File Name : 02_RIV_LS_91E AM
Site Code : 05124383
Start Date : 4/25/2024

Groups Printed- Passenger Vehicles

	La Sierra Avenue Southbound					SR-91 Eastbound On Ramp Westbound					La Sierra Avenue Northbound					SR-91 Eastbound Off Ramp Eastbound							
Start Time	Left	Thru	Right	RTOR	App. Total	Left	Thru	Right	RTOR	App. Total	Left	Thru	Right	RTOR	App. Total	Left	Thru	Right	RTOR	App. Total	Exclu. Total	Inclu. Total	Int. Total
07:00 AM	85	93	0	0	178	0	0	0	0	0	0	226	138	28	364	54	0	71	47	125	75	667	742
07:15 AM	119	128	0	0	247	0	0	0	0	0	0	265	120	26	385	77	0	63	42	140	68	772	840
07:30 AM	81	179	0	0	260	0	0	0	0	0	0	277	131	38	408	89	1	98	54	188	92	856	948
07:45 AM	78	256	0	0	334	0	0	0	0	0	0	361	96	30	457	113	0	88	52	201	82	992	1074
Total	363	656	0	0	1019	0	0	0	0	0	0	1129	485	122	1614	333	1	320	195	654	317	3287	3604
08:00 AM	63	251	0	0	314	0	0	0	0	0	0	366	103	39	469	106	0	107	46	213	85	996	1081
08:15 AM	68	185	0	0	253	0	0	0	0	0	0	414	110	36	524	98	0	81	53	179	89	956	1045
08:30 AM	82	134	0	0	216	0	0	0	0	0	0	283	105	22	388	69	0	84	50	153	72	757	829
08:45 AM	79	130	0	0	209	0	0	0	0	0	0	293	112	23	405	70	1	80	57	151	80	765	845
Total	292	700	0	0	992	0	0	0	0	0	0	1356	430	120	1786	343	1	352	206	696	326	3474	3800
Grand Total	655	1356	0	0	2011	0	0	0	0	0	0	2485	915	242	3400	676	2	672	401	1350	643	6761	7404
Apprch %	32.6	67.4	0			0	0	0			0	73.1	26.9			50.1	0.1	49.8					
Total %	9.7	20.1	0		29.7	0	0	0		0	0	36.8	13.5		50.3	10	0	9.9		20	8.7	91.3	

	La Sierra Avenue Southbound				SR-91 Eastbound On Ramp Westbound				La Sierra Avenue Northbound				SR-91 Eastbound Off Ramp Eastbound				
Start Time	Left	Thru	Right	App. Total	Left	Thru	Right	App. Total	Left	Thru	Right	App. Total	Left	Thru	Right	App. Total	Int. Total
Peak Hour Analysis From 07:30 AM to 08:15 AM - Peak 1 of 1																	
Peak Hour for Entire Intersection Begins at 07:30 AM																	
07:30 AM	**81**	179	0	260	0	0	0	0	0	277	**131**	408	89	**1**	98	188	856
07:45 AM	78	**256**	0	**334**	0	0	0	0	0	361	96	457	**113**	0	88	201	992
08:00 AM	63	251	0	314	0	0	0	0	0	366	103	469	106	0	**107**	**213**	**996**
08:15 AM	68	185	0	253	0	0	0	0	0	**414**	110	**524**	98	0	81	179	956
Total Volume	290	871	0	1161	0	0	0	0	0	1418	440	1858	406	1	374	781	3800
% App. Total	25	75	0		0	0	0		0	76.3	23.7		52	0.1	47.9		
PHF	.895	.851	.000	.869	.000	.000	.000	.000	.000	.856	.840	.886	.898	.250	.874	.917	.954

Counts Unlimited, Inc.
PO Box 1178
Corona, CA 92878
(951) 268-6268

City of Riverside
N/S: La Sierra Avenue
E/W: SR-91 Eastbound Ramps
Weather: Clear

File Name : 02_RIV_LS_91E AM
Site Code : 05124383
Start Date : 4/25/2024
Page No : 2

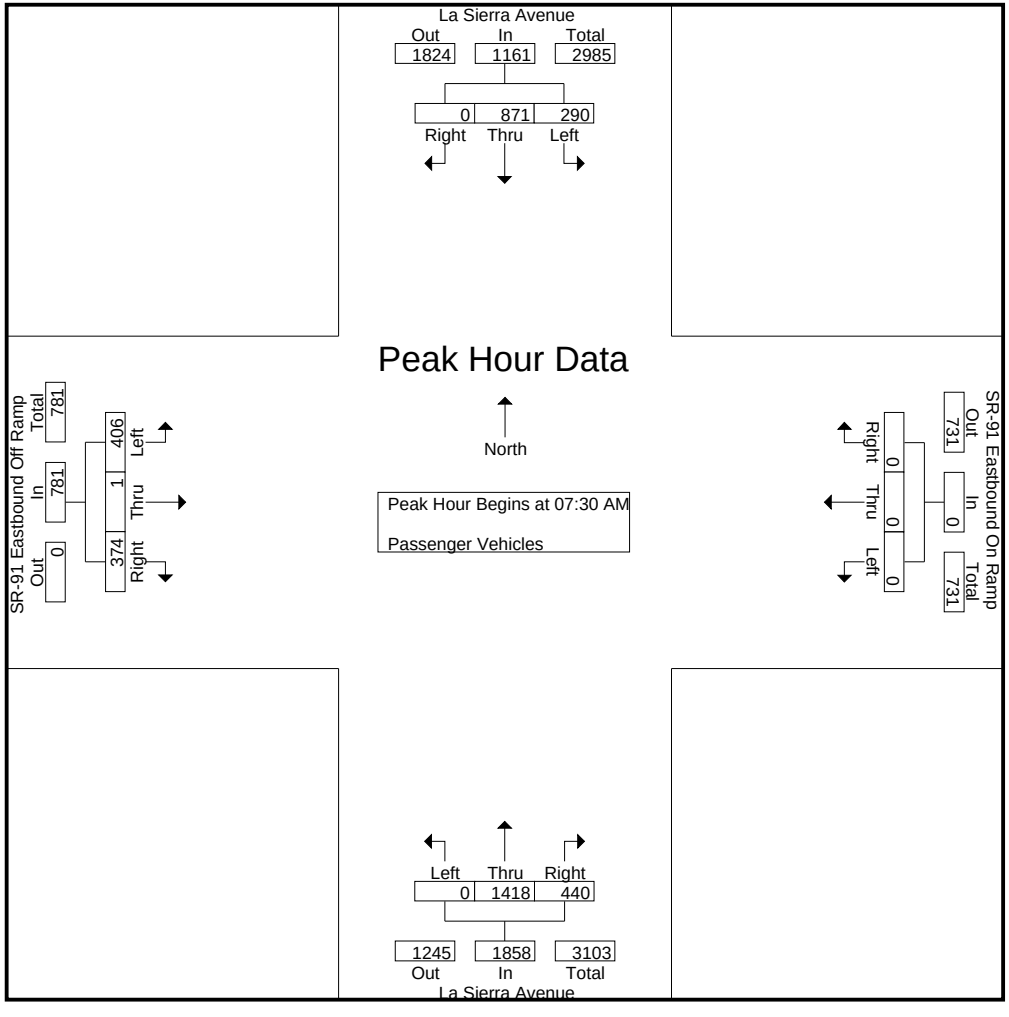

Counts Unlimited, Inc.
PO Box 1178
Corona, CA 92878
(951) 268-6268

City of Riverside
N/S: La Sierra Avenue
E/W: SR-91 Eastbound Ramps
Weather: Clear

File Name : 02_RIV_LS_91E AM
Site Code : 05124383
Start Date : 4/25/2024

	La Sierra Avenue Southbound				SR-91 Eastbound On Ramp Westbound				La Sierra Avenue Northbound				SR-91 Eastbound Off Ramp Eastbound				
Start Time	Left	Thru	Right	App. Total	Left	Thru	Right	App. Total	Left	Thru	Right	App. Total	Left	Thru	Right	App. Total	Int. Total
Peak Hour Analysis From 07:30 AM to 08:15 AM - Peak 1 of 1																	
Peak Hour for Each Approach Begins at:																	
	07:30 AM				07:30 AM				07:30 AM				07:30 AM				
+0 mins.	**81**	179	0	260	0	0	0	0	0	277	**131**	408	89	**1**	98	188	
+15 mins.	78	**256**	0	**334**	0	0	0	0	0	361	96	457	**113**	0	88	201	
+30 mins.	63	251	0	314	0	0	0	0	0	366	103	469	106	0	**107**	**213**	
+45 mins.	68	185	0	253	0	0	0	0	0	**414**	110	**524**	98	0	81	179	
Total Volume	290	871	0	1161	0	0	0	0	0	1418	440	1858	406	1	374	781	
% App. Total	25	75	0		0	0	0		0	76.3	23.7		52	0.1	47.9		
PHF	.895	.851	.000	.869	.000	.000	.000	.000	.000	.856	.840	.886	.898	.250	.874	.917	

Counts Unlimited, Inc.
PO Box 1178
Corona, CA 92878
(951) 268-6268

City of Riverside
N/S: La Sierra Avenue
E/W: SR-91 Eastbound Ramps
Weather: Clear

File Name : 02_RIV_LS_91E AM
Site Code : 05124383
Start Date : 4/25/2024

Groups Printed- Large 2 Axle Vehicles

	La Sierra Avenue Southbound					SR-91 Eastbound On Ramp Westbound					La Sierra Avenue Northbound					SR-91 Eastbound Off Ramp Eastbound							
Start Time	Left	Thru	Right	RTOR	App. Total	Left	Thru	Right	RTOR	App. Total	Left	Thru	Right	RTOR	App. Total	Left	Thru	Right	RTOR	App. Total	Exclu. Total	Inclu. Total	Int. Total
07:00 AM	1	4	0	0	5	0	0	0	0	0	0	4	1	0	5	0	0	2	2	2	2	12	14
07:15 AM	0	6	0	0	6	0	0	0	0	0	0	7	4	2	11	2	0	5	3	7	5	24	29
07:30 AM	0	4	0	0	4	0	0	0	0	0	0	7	4	0	11	0	0	1	0	1	0	16	16
07:45 AM	0	5	0	0	5	0	0	0	0	0	0	10	1	0	11	1	0	1	0	2	0	18	18
Total	1	19	0	0	20	0	0	0	0	0	0	28	10	2	38	3	0	9	5	12	7	70	77
08:00 AM	3	1	0	0	4	0	0	0	0	0	0	4	6	2	10	0	0	7	4	7	6	21	27
08:15 AM	1	4	0	0	5	0	0	0	0	0	0	2	1	0	3	0	0	3	2	3	2	11	13
08:30 AM	0	2	0	0	2	0	0	0	0	0	0	5	3	1	8	1	0	4	4	5	5	15	20
08:45 AM	0	0	0	0	0	0	0	0	0	0	0	4	4	0	8	0	0	3	1	3	1	11	12
Total	4	7	0	0	11	0	0	0	0	0	0	15	14	3	29	1	0	17	11	18	14	58	72
Grand Total	5	26	0	0	31	0	0	0	0	0	0	43	24	5	67	4	0	26	16	30	21	128	149
Apprch %	16.1	83.9	0			0	0	0			0	64.2	35.8			13.3	0	86.7					
Total %	3.9	20.3	0		24.2	0	0	0		0	0	33.6	18.8		52.3	3.1	0	20.3		23.4	14.1	85.9	

	La Sierra Avenue Southbound				SR-91 Eastbound On Ramp Westbound				La Sierra Avenue Northbound				SR-91 Eastbound Off Ramp Eastbound				
Start Time	Left	Thru	Right	App. Total	Left	Thru	Right	App. Total	Left	Thru	Right	App. Total	Left	Thru	Right	App. Total	Int. Total
Peak Hour Analysis From 07:30 AM to 08:15 AM - Peak 1 of 1																	
Peak Hour for Entire Intersection Begins at 07:30 AM																	
07:30 AM	0	4	0	4	0	0	0	0	0	7	4	**11**	0	0	1	1	16
07:45 AM	0	**5**	0	**5**	0	0	0	0	0	**10**	1	11	**1**	0	1	2	18
08:00 AM	**3**	1	0	4	0	0	0	0	0	4	**6**	10	0	0	**7**	**7**	**21**
08:15 AM	1	4	0	5	0	0	0	0	0	2	1	3	0	0	3	3	11
Total Volume	4	14	0	18	0	0	0	0	0	23	12	35	1	0	12	13	66
% App. Total	22.2	77.8	0		0	0	0		0	65.7	34.3		7.7	0	92.3		
PHF	.333	.700	.000	.900	.000	.000	.000	.000	.000	.575	.500	.795	.250	.000	.429	.464	.786

Counts Unlimited, Inc.
PO Box 1178
Corona, CA 92878
(951) 268-6268

City of Riverside
N/S: La Sierra Avenue
E/W: SR-91 Eastbound Ramps
Weather: Clear

File Name : 02_RIV_LS_91E AM
Site Code : 05124383
Start Date : 4/25/2024
Page No : 2

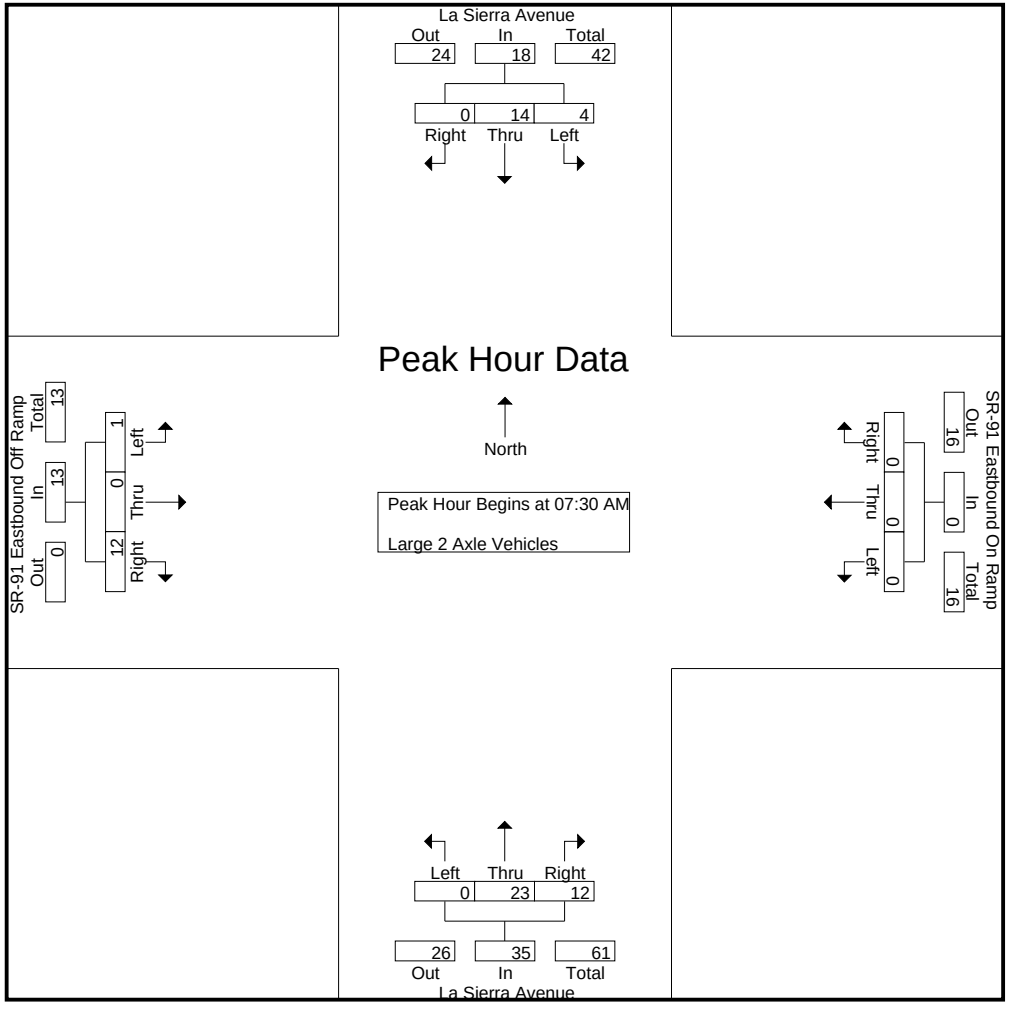

Counts Unlimited, Inc.
PO Box 1178
Corona, CA 92878
(951) 268-6268

City of Riverside
N/S: La Sierra Avenue
E/W: SR-91 Eastbound Ramps
Weather: Clear

File Name : 02_RIV_LS_91E AM
Site Code : 05124383
Start Date : 4/25/2024

	La Sierra Avenue Southbound				SR-91 Eastbound On Ramp Westbound				La Sierra Avenue Northbound				SR-91 Eastbound Off Ramp Eastbound				
Start Time	Left	Thru	Right	App. Total	Left	Thru	Right	App. Total	Left	Thru	Right	App. Total	Left	Thru	Right	App. Total	Int. Total
Peak Hour Analysis From 07:30 AM to 08:15 AM - Peak 1 of 1																	
Peak Hour for Each Approach Begins at:																	
	07:30 AM				07:30 AM				07:30 AM				07:30 AM				
+0 mins.	0	4	0	4	0	0	0	0	0	7	4	**11**	0	0	1	1	
+15 mins.	0	**5**	0	**5**	0	0	0	0	0	**10**	1	11	**1**	0	1	2	
+30 mins.	**3**	1	0	4	0	0	0	0	0	4	**6**	10	0	0	**7**	**7**	
+45 mins.	1	4	0	5	0	0	0	0	0	2	1	3	0	0	3	3	
Total Volume	4	14	0	18	0	0	0	0	0	23	12	35	1	0	12	13	
% App. Total	22.2	77.8	0		0	0	0		0	65.7	34.3		7.7	0	92.3		
PHF	.333	.700	.000	.900	.000	.000	.000	.000	.000	.575	.500	.795	.250	.000	.429	.464	

Counts Unlimited, Inc.
PO Box 1178
Corona, CA 92878
(951) 268-6268

City of Riverside
N/S: La Sierra Avenue
E/W: SR-91 Eastbound Ramps
Weather: Clear

File Name : 02_RIV_LS_91E AM
Site Code : 05124383
Start Date : 4/25/2024

Groups Printed- 3 Axle Vehicles

	La Sierra Avenue Southbound					SR-91 Eastbound On Ramp Westbound					La Sierra Avenue Northbound					SR-91 Eastbound Off Ramp Eastbound							
Start Time	Left	Thru	Right	RTOR	App. Total	Left	Thru	Right	RTOR	App. Total	Left	Thru	Right	RTOR	App. Total	Left	Thru	Right	RTOR	App. Total	Exclu. Total	Inclu. Total	Int. Total
07:00 AM	1	0	0	0	1	0	0	0	0	0	0	3	1	1	4	0	0	2	2	2	3	7	10
07:15 AM	1	0	0	0	1	0	0	0	0	0	0	0	1	0	1	0	0	1	1	1	1	3	4
07:30 AM	3	1	0	0	4	0	0	0	0	0	0	0	0	0	0	0	0	1	0	1	0	5	5
07:45 AM	1	0	0	0	1	0	0	0	0	0	0	1	0	0	1	1	0	0	0	1	0	3	3
Total	6	1	0	0	7	0	0	0	0	0	0	4	2	1	6	1	0	4	3	5	4	18	22
08:00 AM	0	2	0	0	2	0	0	0	0	0	0	0	0	0	0	0	0	0	0	0	0	2	2
08:15 AM	0	2	0	0	2	0	0	0	0	0	0	5	0	0	5	0	0	2	2	2	2	9	11
08:30 AM	0	3	0	0	3	0	0	0	0	0	0	2	0	0	2	0	0	3	3	3	3	8	11
08:45 AM	0	1	0	0	1	0	0	0	0	0	0	0	1	0	1	0	0	1	1	1	1	3	4
Total	0	8	0	0	8	0	0	0	0	0	0	7	1	0	8	0	0	6	6	6	6	22	28
Grand Total	6	9	0	0	15	0	0	0	0	0	0	11	3	1	14	1	0	10	9	11	10	40	50
Apprch %	40	60	0			0	0	0			0	78.6	21.4			9.1	0	90.9					
Total %	15	22.5	0		37.5	0	0	0		0	0	27.5	7.5		35	2.5	0	25		27.5	20	80	

	La Sierra Avenue Southbound				SR-91 Eastbound On Ramp Westbound				La Sierra Avenue Northbound				SR-91 Eastbound Off Ramp Eastbound				
Start Time	Left	Thru	Right	App. Total	Left	Thru	Right	App. Total	Left	Thru	Right	App. Total	Left	Thru	Right	App. Total	Int. Total
Peak Hour Analysis From 07:30 AM to 08:15 AM - Peak 1 of 1																	
Peak Hour for Entire Intersection Begins at 07:30 AM																	
07:30 AM	**3**	1	0	**4**	0	0	0	0	0	0	0	0	0	0	1	1	5
07:45 AM	1	0	0	1	0	0	0	0	0	1	0	1	**1**	0	0	1	3
08:00 AM	0	**2**	0	2	0	0	0	0	0	0	0	0	0	0	0	0	2
08:15 AM	0	2	0	2	0	0	0	0	0	**5**	0	**5**	0	0	**2**	**2**	**9**
Total Volume	4	5	0	9	0	0	0	0	0	6	0	6	1	0	3	4	19
% App. Total	44.4	55.6	0		0	0	0		0	100	0		25	0	75		
PHF	.333	.625	.000	.563	.000	.000	.000	.000	.000	.300	.000	.300	.250	.000	.375	.500	.528

Counts Unlimited, Inc.
PO Box 1178
Corona, CA 92878
(951) 268-6268

City of Riverside
N/S: La Sierra Avenue
E/W: SR-91 Eastbound Ramps
Weather: Clear

File Name : 02_RIV_LS_91E AM
Site Code : 05124383
Start Date : 4/25/2024
Page No : 2

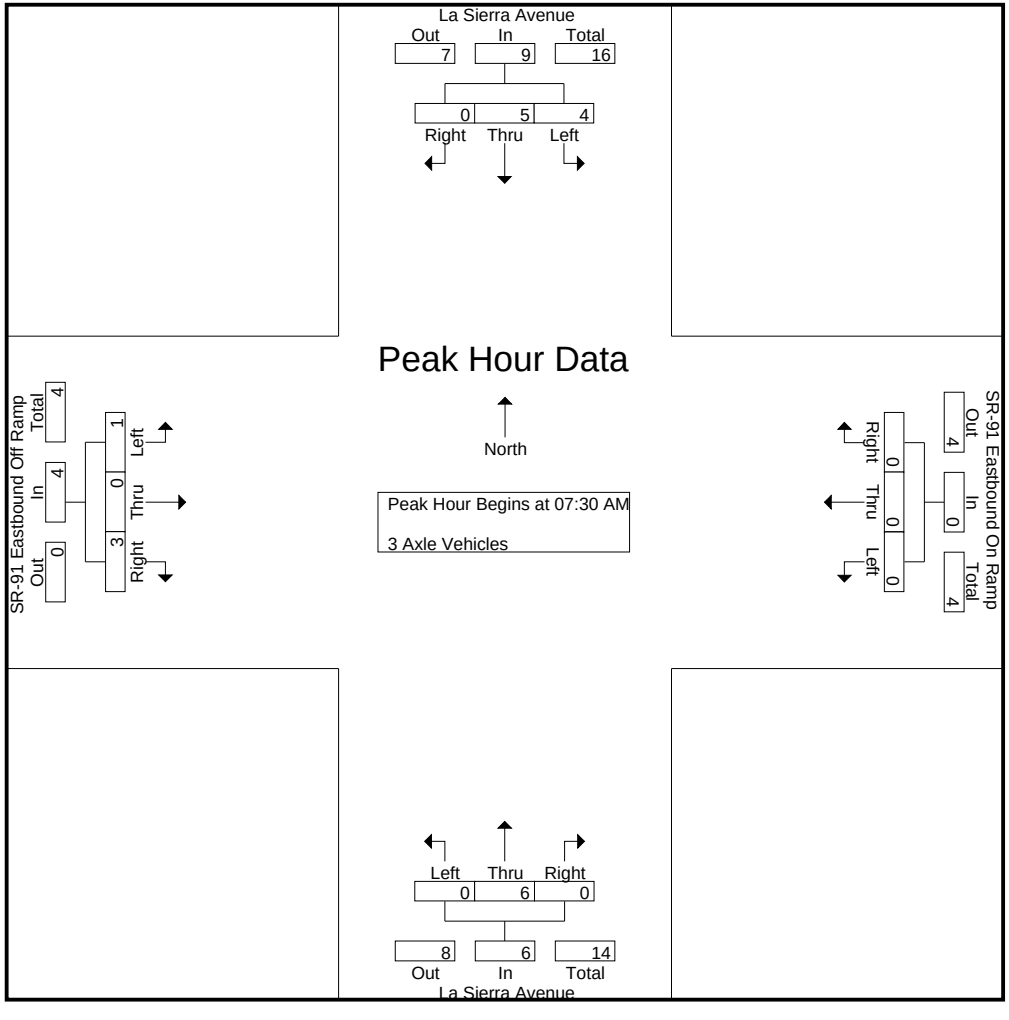

Counts Unlimited, Inc.
PO Box 1178
Corona, CA 92878
(951) 268-6268

City of Riverside
N/S: La Sierra Avenue
E/W: SR-91 Eastbound Ramps
Weather: Clear

File Name : 02_RIV_LS_91E AM
Site Code : 05124383
Start Date : 4/25/2024

	La Sierra Avenue Southbound				SR-91 Eastbound On Ramp Westbound				La Sierra Avenue Northbound				SR-91 Eastbound Off Ramp Eastbound				
Start Time	Left	Thru	Right	App. Total	Left	Thru	Right	App. Total	Left	Thru	Right	App. Total	Left	Thru	Right	App. Total	Int. Total
Peak Hour Analysis From 07:30 AM to 08:15 AM - Peak 1 of 1																	
Peak Hour for Each Approach Begins at:																	
	07:30 AM				07:30 AM				07:30 AM				07:30 AM				
+0 mins.	**3**	1	0	**4**	0	0	0	0	0	0	0	0	0	0	1	1	
+15 mins.	1	0	0	1	0	0	0	0	0	1	0	1	**1**	0	0	1	
+30 mins.	0	**2**	0	2	0	0	0	0	0	0	0	0	0	0	0	0	
+45 mins.	0	2	0	2	0	0	0	0	0	**5**	0	**5**	0	0	**2**	**2**	
Total Volume	4	5	0	9	0	0	0	0	0	6	0	6	1	0	3	4	
% App. Total	44.4	55.6	0		0	0	0		0	100	0		25	0	75		
PHF	.333	.625	.000	.563	.000	.000	.000	.000	.000	.300	.000	.300	.250	.000	.375	.500	

Counts Unlimited, Inc.
PO Box 1178
Corona, CA 92878
(951) 268-6268

City of Riverside
N/S: La Sierra Avenue
E/W: SR-91 Eastbound Ramps
Weather: Clear

File Name : 02_RIV_LS_91E AM
Site Code : 05124383
Start Date : 4/25/2024
Page No : 1

Groups Printed- 4+ Axle Trucks

	La Sierra Avenue Southbound					SR-91 Eastbound On Ramp Westbound					La Sierra Avenue Northbound					SR-91 Eastbound Off Ramp Eastbound							
Start Time	Left	Thru	Right	RTOR	App. Total	Left	Thru	Right	RTOR	App. Total	Left	Thru	Right	RTOR	App. Total	Left	Thru	Right	RTOR	App. Total	Exclu. Total	Inclu. Total	Int. Total
07:00 AM	0	0	0	0	0	0	0	0	0	0	0	2	1	0	3	0	0	0	0	0	0	3	3
07:15 AM	2	5	0	0	7	0	0	0	0	0	0	3	0	0	3	1	0	2	2	3	2	13	15
07:30 AM	3	0	0	0	3	0	0	0	0	0	0	2	1	0	3	2	0	3	2	5	2	11	13
07:45 AM	0	2	0	0	2	0	0	0	0	0	0	3	1	0	4	0	0	1	1	1	1	7	8
Total	5	7	0	0	12	0	0	0	0	0	0	10	3	0	13	3	0	6	5	9	5	34	39
08:00 AM	0	1	0	0	1	0	0	0	0	0	0	2	1	0	3	0	0	5	2	5	2	9	11
08:15 AM	1	2	0	0	3	0	0	0	0	0	0	2	0	1	2	0	0	1	0	1	1	6	7
08:30 AM	1	0	0	0	1	0	0	0	0	0	0	1	1	1	2	0	0	5	3	5	4	8	12
08:45 AM	0	2	0	0	2	0	0	0	0	0	0	2	2	0	4	0	0	2	0	2	0	8	8
Total	2	5	0	0	7	0	0	0	0	0	0	7	4	2	11	0	0	13	5	13	7	31	38
Grand Total	7	12	0	0	19	0	0	0	0	0	0	17	7	2	24	3	0	19	10	22	12	65	77
Apprch %	36.8	63.2	0			0	0	0			0	70.8	29.2			13.6	0	86.4					
Total %	10.8	18.5	0		29.2	0	0	0		0	0	26.2	10.8		36.9	4.6	0	29.2		33.8	15.6	84.4	

	La Sierra Avenue Southbound				SR-91 Eastbound On Ramp Westbound				La Sierra Avenue Northbound				SR-91 Eastbound Off Ramp Eastbound				
Start Time	Left	Thru	Right	App. Total	Left	Thru	Right	App. Total	Left	Thru	Right	App. Total	Left	Thru	Right	App. Total	Int. Total
Peak Hour Analysis From 07:30 AM to 08:15 AM - Peak 1 of 1																	
Peak Hour for Entire Intersection Begins at 07:30 AM																	
07:30 AM	**3**	0	0	**3**	0	0	0	0	0	2	**1**	3	**2**	0	3	**5**	**11**
07:45 AM	0	**2**	0	2	0	0	0	0	0	**3**	1	**4**	0	0	1	1	7
08:00 AM	0	1	0	1	0	0	0	0	0	2	1	3	0	0	**5**	5	9
08:15 AM	1	2	0	3	0	0	0	0	0	2	0	2	0	0	1	1	6
Total Volume	4	5	0	9	0	0	0	0	0	9	3	12	2	0	10	12	33
% App. Total	44.4	55.6	0		0	0	0		0	75	25		16.7	0	83.3		
PHF	.333	.625	.000	.750	.000	.000	.000	.000	.000	.750	.750	.750	.250	.000	.500	.600	.750

Counts Unlimited, Inc.
PO Box 1178
Corona, CA 92878
(951) 268-6268

City of Riverside
N/S: La Sierra Avenue
E/W: SR-91 Eastbound Ramps
Weather: Clear

File Name : 02_RIV_LS_91E AM
Site Code : 05124383
Start Date : 4/25/2024
Page No : 2

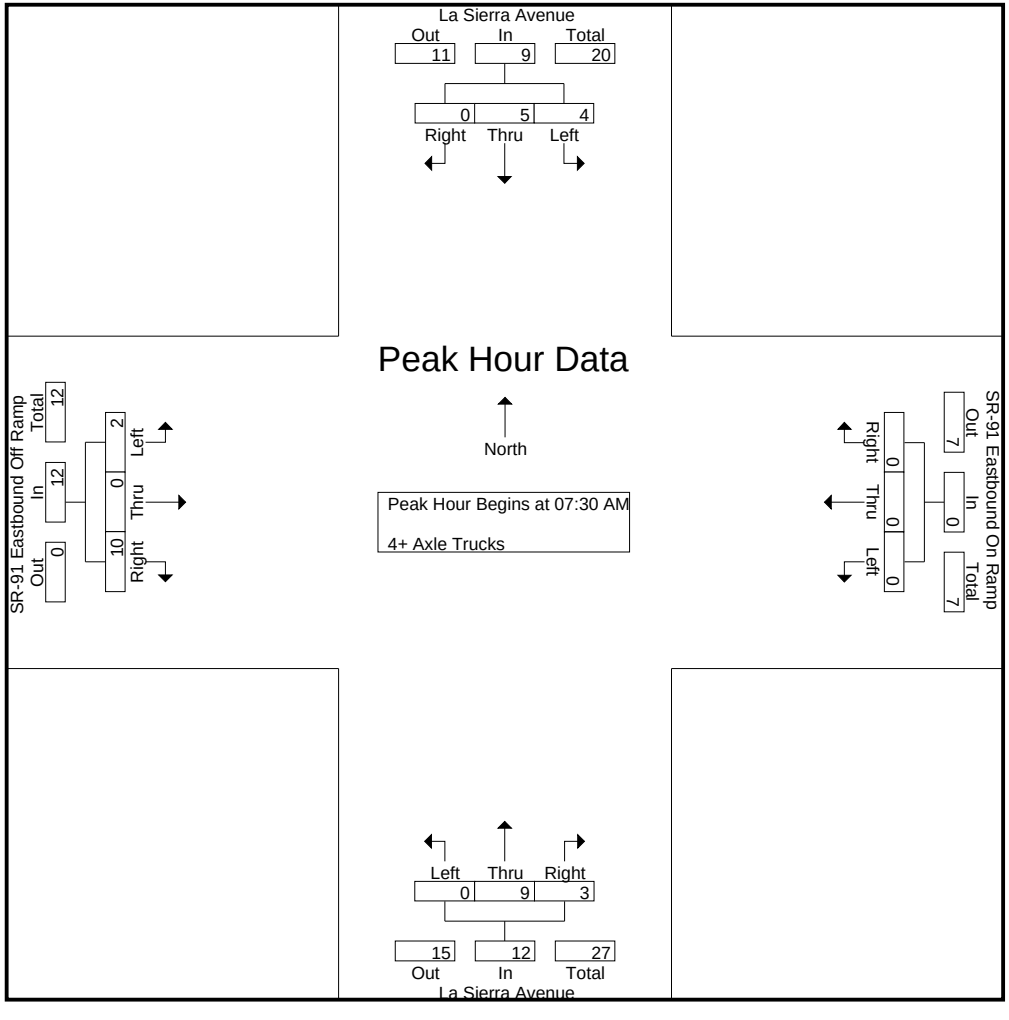

Counts Unlimited, Inc.
PO Box 1178
Corona, CA 92878
(951) 268-6268

City of Riverside
N/S: La Sierra Avenue
E/W: SR-91 Eastbound Ramps
Weather: Clear

File Name : 02_RIV_LS_91E AM
Site Code : 05124383
Start Date : 4/25/2024

	La Sierra Avenue Southbound				SR-91 Eastbound On Ramp Westbound				La Sierra Avenue Northbound				SR-91 Eastbound Off Ramp Eastbound				
Start Time	Left	Thru	Right	App. Total	Left	Thru	Right	App. Total	Left	Thru	Right	App. Total	Left	Thru	Right	App. Total	Int. Total
Peak Hour Analysis From 07:30 AM to 08:15 AM - Peak 1 of 1																	
Peak Hour for Each Approach Begins at:																	
	07:30 AM				07:30 AM				07:30 AM				07:30 AM				
+0 mins.	**3**	0	0	**3**	0	0	0	0	0	2	**1**	3	**2**	0	3	**5**	
+15 mins.	0	**2**	0	2	0	0	0	0	0	**3**	1	**4**	0	0	1	1	
+30 mins.	0	1	0	1	0	0	0	0	0	2	1	3	0	0	**5**	5	
+45 mins.	1	2	0	3	0	0	0	0	0	2	0	2	0	0	1	1	
Total Volume	4	5	0	9	0	0	0	0	0	9	3	12	2	0	10	12	
% App. Total	44.4	55.6	0		0	0	0		0	75	25		16.7	0	83.3		
PHF	.333	.625	.000	.750	.000	.000	.000	.000	.000	.750	.750	.750	.250	.000	.500	.600	

Counts Unlimited, Inc.
PO Box 1178
Corona, CA 92878
(951) 268-6268

City of Riverside
N/S: La Sierra Avenue
E/W: SR-91 Eastbound Ramps
Weather: Clear

File Name : 02_RIV_LS_91E PM
Site Code : 05124383
Start Date : 4/25/2024
Page No : 1

Groups Printed- Passenger Vehicles - Large 2 Axle Vehicles - 3 Axle Vehicles - 4+ Axle Trucks

	La Sierra Avenue Southbound					SR-91 Eastbound On Ramp Westbound					La Sierra Avenue Northbound					SR-91 Eastbound Off Ramp Eastbound							
Start Time	Left	Thru	Right	RTOR	App. Total	Left	Thru	Right	RTOR	App. Total	Left	Thru	Right	RTOR	App. Total	Left	Thru	Right	RTOR	App. Total	Exclu. Total	Inclu. Total	Int. Total
04:00 PM	116	324	0	0	440	0	0	0	0	0	0	267	92	35	359	43	1	197	82	241	117	1040	1157
04:15 PM	76	266	0	0	342	0	0	0	0	0	0	277	88	41	365	49	4	174	71	227	112	934	1046
04:30 PM	88	304	0	0	392	0	0	0	0	0	0	276	82	41	358	46	10	181	66	237	107	987	1094
04:45 PM	99	306	0	0	405	0	0	0	0	0	0	272	66	27	338	45	3	197	78	245	105	988	1093
Total	379	1200	0	0	1579	0	0	0	0	0	0	1092	328	144	1420	183	18	749	297	950	441	3949	4390
05:00 PM	111	362	0	0	473	0	0	0	0	0	0	289	79	33	368	45	0	190	53	235	86	1076	1162
05:15 PM	92	392	0	0	484	0	0	0	0	0	0	236	64	35	300	54	1	206	55	261	90	1045	1135
05:30 PM	103	351	0	0	454	0	0	0	0	0	0	261	80	40	341	56	6	203	45	265	85	1060	1145
05:45 PM	90	292	0	0	382	0	0	0	0	0	0	241	71	36	312	61	6	189	52	256	88	950	1038
Total	396	1397	0	0	1793	0	0	0	0	0	0	1027	294	144	1321	216	13	788	205	1017	349	4131	4480
Grand Total	775	2597	0	0	3372	0	0	0	0	0	0	2119	622	288	2741	399	31	1537	502	1967	790	8080	8870
Apprch %	23	77	0			0	0	0			0	77.3	22.7			20.3	1.6	78.1					
Total %	9.6	32.1	0		41.7	0	0	0		0	0	26.2	7.7		33.9	4.9	0.4	19		24.3	8.9	91.1	
Passenger Vehicles	764	2568	0		3332	0	0	0		0	0	2076	608		2965	396	30	1503		2419	0	0	8716
% Passenger Vehicles	98.6	98.9	0	0	98.8	0	0	0	0	0	0	98	97.7	97.6	97.9	99.2	96.8	97.8	97.6	98	0	0	98.3
Large 2 Axle Vehicles	6	22	0		28	0	0	0		0	0	25	8		36	2	0	15		22	0	0	86
% Large 2 Axle Vehicles	0.8	0.8	0	0	0.8	0	0	0	0	0	0	1.2	1.3	1	1.2	0.5	0	1	1	0.9	0	0	1
3 Axle Vehicles	3	1	0		4	0	0	0		0	0	3	3		7	1	1	6		9	0	0	20
% 3 Axle Vehicles	0.4	0	0	0	0.1	0	0	0	0	0	0	0.1	0.5	0.3	0.2	0.3	3.2	0.4	0.2	0.4	0	0	0.2
4+ Axle Trucks	2	6	0		8	0	0	0		0	0	15	3		21	0	0	13		19	0	0	48
% 4+ Axle Trucks	0.3	0.2	0	0	0.2	0	0	0	0	0	0	0.7	0.5	1	0.7	0	0	0.8	1.2	0.8	0	0	0.5

	La Sierra Avenue Southbound				SR-91 Eastbound On Ramp Westbound				La Sierra Avenue Northbound				SR-91 Eastbound Off Ramp Eastbound				
Start Time	Left	Thru	Right	App. Total	Left	Thru	Right	App. Total	Left	Thru	Right	App. Total	Left	Thru	Right	App. Total	Int. Total
Peak Hour Analysis From 04:00 PM to 05:45 PM - Peak 1 of 1																	
Peak Hour for Entire Intersection Begins at 04:45 PM																	
04:45 PM	99	306	0	405	0	0	0	0	0	272	66	338	45	3	197	245	988
05:00 PM	**111**	362	0	473	0	0	0	0	0	**289**	79	**368**	45	0	190	235	**1076**
05:15 PM	92	**392**	0	**484**	0	0	0	0	0	236	64	300	54	1	**206**	261	1045
05:30 PM	103	351	0	454	0	0	0	0	0	261	**80**	341	**56**	**6**	203	**265**	1060
Total Volume	405	1411	0	1816	0	0	0	0	0	1058	289	1347	200	10	796	1006	4169
% App. Total	22.3	77.7	0		0	0	0		0	78.5	21.5		19.9	1	79.1		
PHF	.912	.900	.000	.938	.000	.000	.000	.000	.000	.915	.903	.915	.893	.417	.966	.949	.969

Counts Unlimited, Inc.
PO Box 1178
Corona, CA 92878
(951) 268-6268

City of Riverside
N/S: La Sierra Avenue
E/W: SR-91 Eastbound Ramps
Weather: Clear

File Name : 02_RIV_LS_91E PM
Site Code : 05124383
Start Date : 4/25/2024
Page No : 2

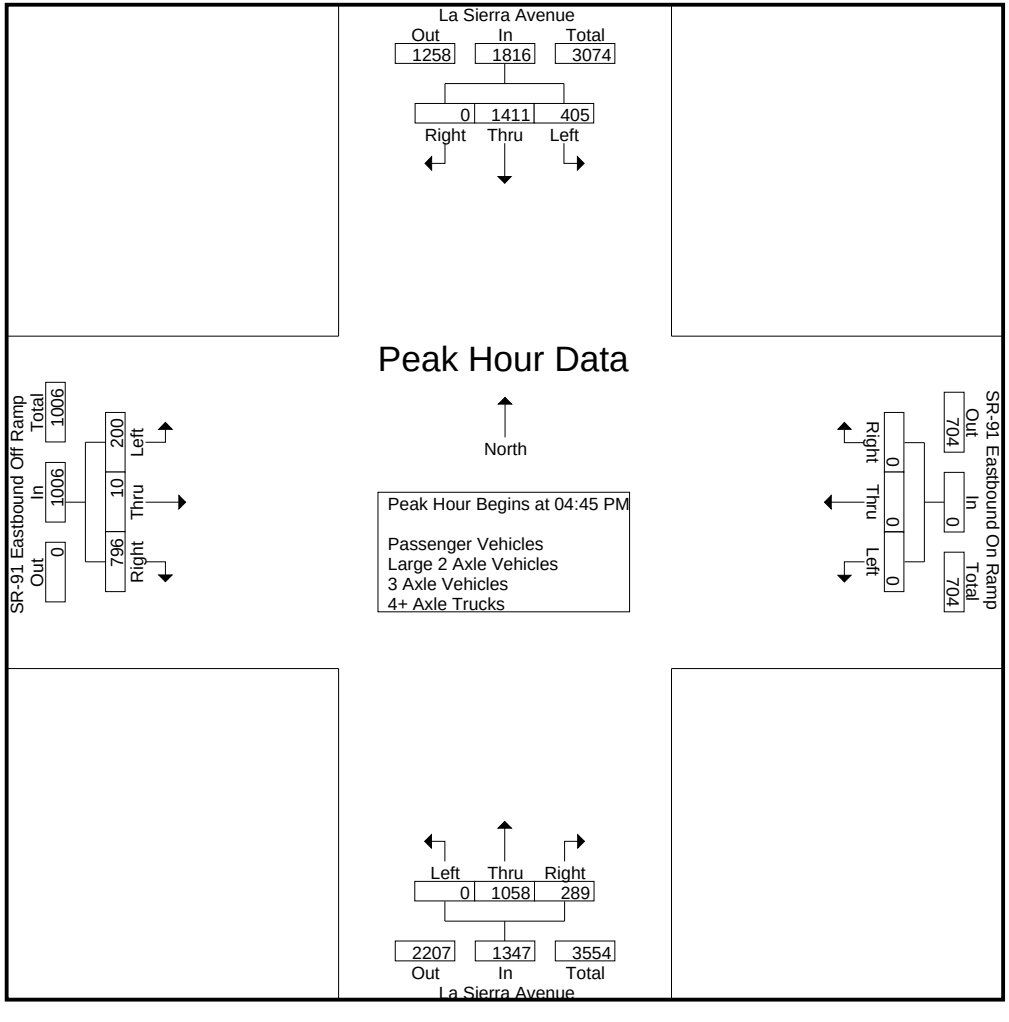

Counts Unlimited, Inc.
PO Box 1178
Corona, CA 92878
(951) 268-6268

City of Riverside
N/S: La Sierra Avenue
E/W: SR-91 Eastbound Ramps
Weather: Clear

File Name : 02_RIV_LS_91E PM
Site Code : 05124383
Start Date : 4/25/2024

	La Sierra Avenue Southbound				SR-91 Eastbound On Ramp Westbound				La Sierra Avenue Northbound				SR-91 Eastbound Off Ramp Eastbound				
Start Time	Left	Thru	Right	App. Total	Left	Thru	Right	App. Total	Left	Thru	Right	App. Total	Left	Thru	Right	App. Total	Int. Total
Peak Hour Analysis From 04:00 PM to 05:45 PM - Peak 1 of 1																	
Peak Hour for Each Approach Begins at:																	
	04:45 PM				04:00 PM				04:15 PM				05:00 PM				
+0 mins.	99	306	0	405	0	0	0	0	0	277	**88**	365	45	0	190	235	
+15 mins.	**111**	362	0	473	0	0	0	0	0	276	82	358	54	1	**206**	261	
+30 mins.	92	**392**	0	**484**	0	0	0	0	0	272	66	338	56	**6**	203	**265**	
+45 mins.	103	351	0	454	0	0	0	0	0	**289**	79	**368**	**61**	6	189	256	
Total Volume	405	1411	0	1816	0	0	0	0	0	1114	315	1429	216	13	788	1017	
% App. Total	22.3	77.7	0		0	0	0		0	78	22		21.2	1.3	77.5		
PHF	.912	.900	.000	.938	.000	.000	.000	.000	.000	.964	.895	.971	.885	.542	.956	.959	

Counts Unlimited, Inc.
PO Box 1178
Corona, CA 92878
(951) 268-6268

City of Riverside
N/S: La Sierra Avenue
E/W: SR-91 Eastbound Ramps
Weather: Clear

File Name : 02_RIV_LS_91E PM
Site Code : 05124383
Start Date : 4/25/2024

Groups Printed- Passenger Vehicles

	La Sierra Avenue Southbound					SR-91 Eastbound On Ramp Westbound					La Sierra Avenue Northbound					SR-91 Eastbound Off Ramp Eastbound							
Start Time	Left	Thru	Right	RTOR	App. Total	Left	Thru	Right	RTOR	App. Total	Left	Thru	Right	RTOR	App. Total	Left	Thru	Right	RTOR	App. Total	Exclu. Total	Inclu. Total	Int. Total
04:00 PM	115	321	0	0	436	0	0	0	0	0	0	263	90	34	353	43	1	191	81	235	115	1024	1139
04:15 PM	74	264	0	0	338	0	0	0	0	0	0	274	85	39	359	49	4	170	68	223	107	920	1027
04:30 PM	88	303	0	0	391	0	0	0	0	0	0	268	80	40	348	46	10	178	65	234	105	973	1078
04:45 PM	97	303	0	0	400	0	0	0	0	0	0	264	65	27	329	44	3	191	76	238	103	967	1070
Total	374	1191	0	0	1565	0	0	0	0	0	0	1069	320	140	1389	182	18	730	290	930	430	3884	4314
05:00 PM	109	358	0	0	467	0	0	0	0	0	0	281	78	33	359	45	0	189	53	234	86	1060	1146
05:15 PM	91	382	0	0	473	0	0	0	0	0	0	232	63	35	295	52	1	199	52	252	87	1020	1107
05:30 PM	101	349	0	0	450	0	0	0	0	0	0	256	79	39	335	56	5	198	43	259	82	1044	1126
05:45 PM	89	288	0	0	377	0	0	0	0	0	0	238	68	34	306	61	6	187	52	254	86	937	1023
Total	390	1377	0	0	1767	0	0	0	0	0	0	1007	288	141	1295	214	12	773	200	999	341	4061	4402
Grand Total	764	2568	0	0	3332	0	0	0	0	0	0	2076	608	281	2684	396	30	1503	490	1929	771	7945	8716
Apprch %	22.9	77.1	0			0	0	0			0	77.3	22.7			20.5	1.6	77.9					
Total %	9.6	32.3	0		41.9	0	0	0		0	0	26.1	7.7		33.8	5	0.4	18.9		24.3	8.8	91.2	

	La Sierra Avenue Southbound				SR-91 Eastbound On Ramp Westbound				La Sierra Avenue Northbound				SR-91 Eastbound Off Ramp Eastbound				
Start Time	Left	Thru	Right	App. Total	Left	Thru	Right	App. Total	Left	Thru	Right	App. Total	Left	Thru	Right	App. Total	Int. Total
Peak Hour Analysis From 04:45 PM to 05:30 PM - Peak 1 of 1																	
Peak Hour for Entire Intersection Begins at 04:45 PM																	
04:45 PM	97	303	0	400	0	0	0	0	0	264	65	329	44	3	191	238	967
05:00 PM	**109**	358	0	467	0	0	0	0	0	**281**	78	**359**	45	0	189	234	**1060**
05:15 PM	91	**382**	0	**473**	0	0	0	0	0	232	63	295	52	1	**199**	252	1020
05:30 PM	101	349	0	450	0	0	0	0	0	256	**79**	335	**56**	**5**	198	**259**	1044
Total Volume	398	1392	0	1790	0	0	0	0	0	1033	285	1318	197	9	777	983	4091
% App. Total	22.2	77.8	0		0	0	0		0	78.4	21.6		20	0.9	79		
PHF	.913	.911	.000	.946	.000	.000	.000	.000	.000	.919	.902	.918	.879	.450	.976	.949	.965

Counts Unlimited, Inc.
PO Box 1178
Corona, CA 92878
(951) 268-6268

City of Riverside
N/S: La Sierra Avenue
E/W: SR-91 Eastbound Ramps
Weather: Clear

File Name : 02_RIV_LS_91E PM
Site Code : 05124383
Start Date : 4/25/2024
Page No : 2

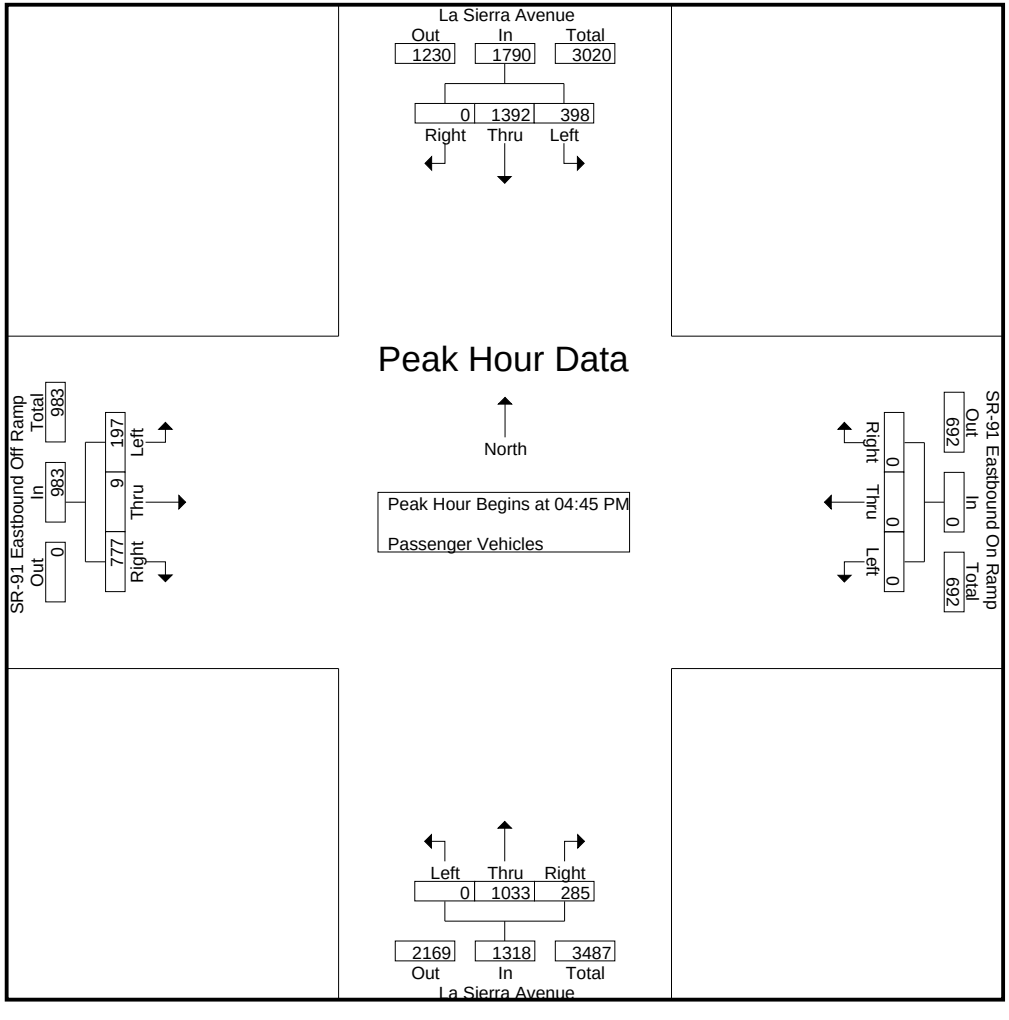

Counts Unlimited, Inc.
PO Box 1178
Corona, CA 92878
(951) 268-6268

City of Riverside
N/S: La Sierra Avenue
E/W: SR-91 Eastbound Ramps
Weather: Clear

File Name : 02_RIV_LS_91E PM
Site Code : 05124383
Start Date : 4/25/2024

	La Sierra Avenue Southbound				SR-91 Eastbound On Ramp Westbound				La Sierra Avenue Northbound				SR-91 Eastbound Off Ramp Eastbound				
Start Time	Left	Thru	Right	App. Total	Left	Thru	Right	App. Total	Left	Thru	Right	App. Total	Left	Thru	Right	App. Total	Int. Total
Peak Hour Analysis From 04:45 PM to 05:30 PM - Peak 1 of 1																	
Peak Hour for Each Approach Begins at:																	
	04:45 PM				04:45 PM				04:45 PM				04:45 PM				
+0 mins.	97	303	0	400	0	0	0	0	0	264	65	329	44	3	191	238	
+15 mins.	**109**	358	0	467	0	0	0	0	0	**281**	78	**359**	45	0	189	234	
+30 mins.	91	**382**	0	**473**	0	0	0	0	0	232	63	295	52	1	**199**	252	
+45 mins.	101	349	0	450	0	0	0	0	0	256	**79**	335	**56**	**5**	198	**259**	
Total Volume	398	1392	0	1790	0	0	0	0	0	1033	285	1318	197	9	777	983	
% App. Total	22.2	77.8	0		0	0	0		0	78.4	21.6		20	0.9	79		
PHF	.913	.911	.000	.946	.000	.000	.000	.000	.000	.919	.902	.918	.879	.450	.976	.949	

Counts Unlimited, Inc.
PO Box 1178
Corona, CA 92878
(951) 268-6268

City of Riverside
N/S: La Sierra Avenue
E/W: SR-91 Eastbound Ramps
Weather: Clear

File Name : 02_RIV_LS_91E PM
Site Code : 05124383
Start Date : 4/25/2024

Groups Printed- Large 2 Axle Vehicles

	La Sierra Avenue Southbound					SR-91 Eastbound On Ramp Westbound					La Sierra Avenue Northbound					SR-91 Eastbound Off Ramp Eastbound							
Start Time	Left	Thru	Right	RTOR	App. Total	Left	Thru	Right	RTOR	App. Total	Left	Thru	Right	RTOR	App. Total	Left	Thru	Right	RTOR	App. Total	Exclu. Total	Inclu. Total	Int. Total
04:00 PM	0	3	0	0	3	0	0	0	0	0	0	3	1	0	4	0	0	2	0	2	0	9	9
04:15 PM	1	2	0	0	3	0	0	0	0	0	0	1	1	1	2	0	0	2	1	2	2	7	9
04:30 PM	0	1	0	0	1	0	0	0	0	0	0	5	2	1	7	0	0	1	1	1	2	9	11
04:45 PM	1	1	0	0	2	0	0	0	0	0	0	7	1	0	8	1	0	3	0	4	0	14	14
Total	2	7	0	0	9	0	0	0	0	0	0	16	5	2	21	1	0	8	2	9	4	39	43
05:00 PM	2	3	0	0	5	0	0	0	0	0	0	1	1	0	2	0	0	1	0	1	0	8	8
05:15 PM	0	8	0	0	8	0	0	0	0	0	0	1	1	0	2	1	0	2	1	3	1	13	14
05:30 PM	1	1	0	0	2	0	0	0	0	0	0	4	0	0	4	0	0	4	2	4	2	10	12
05:45 PM	1	3	0	0	4	0	0	0	0	0	0	3	1	1	4	0	0	0	0	0	1	8	9
Total	4	15	0	0	19	0	0	0	0	0	0	9	3	1	12	1	0	7	3	8	4	39	43
Grand Total	6	22	0	0	28	0	0	0	0	0	0	25	8	3	33	2	0	15	5	17	8	78	86
Apprch %	21.4	78.6	0			0	0	0			0	75.8	24.2			11.8	0	88.2					
Total %	7.7	28.2	0		35.9	0	0	0		0	0	32.1	10.3		42.3	2.6	0	19.2		21.8	9.3	90.7	

	La Sierra Avenue Southbound				SR-91 Eastbound On Ramp Westbound				La Sierra Avenue Northbound				SR-91 Eastbound Off Ramp Eastbound				
Start Time	Left	Thru	Right	App. Total	Left	Thru	Right	App. Total	Left	Thru	Right	App. Total	Left	Thru	Right	App. Total	Int. Total
Peak Hour Analysis From 04:45 PM to 05:30 PM - Peak 1 of 1																	
Peak Hour for Entire Intersection Begins at 04:45 PM																	
04:45 PM	1	1	0	2	0	0	0	0	0	**7**	**1**	**8**	**1**	0	3	**4**	**14**
05:00 PM	**2**	3	0	5	0	0	0	0	0	1	1	2	0	0	1	1	8
05:15 PM	0	**8**	0	**8**	0	0	0	0	0	1	1	2	1	0	2	3	13
05:30 PM	1	1	0	2	0	0	0	0	0	4	0	4	0	0	**4**	4	10
Total Volume	4	13	0	17	0	0	0	0	0	13	3	16	2	0	10	12	45
% App. Total	23.5	76.5	0		0	0	0		0	81.2	18.8		16.7	0	83.3		
PHF	.500	.406	.000	.531	.000	.000	.000	.000	.000	.464	.750	.500	.500	.000	.625	.750	.804

Counts Unlimited, Inc.
PO Box 1178
Corona, CA 92878
(951) 268-6268

City of Riverside
N/S: La Sierra Avenue
E/W: SR-91 Eastbound Ramps
Weather: Clear

File Name : 02_RIV_LS_91E PM
Site Code : 05124383
Start Date : 4/25/2024
Page No : 2

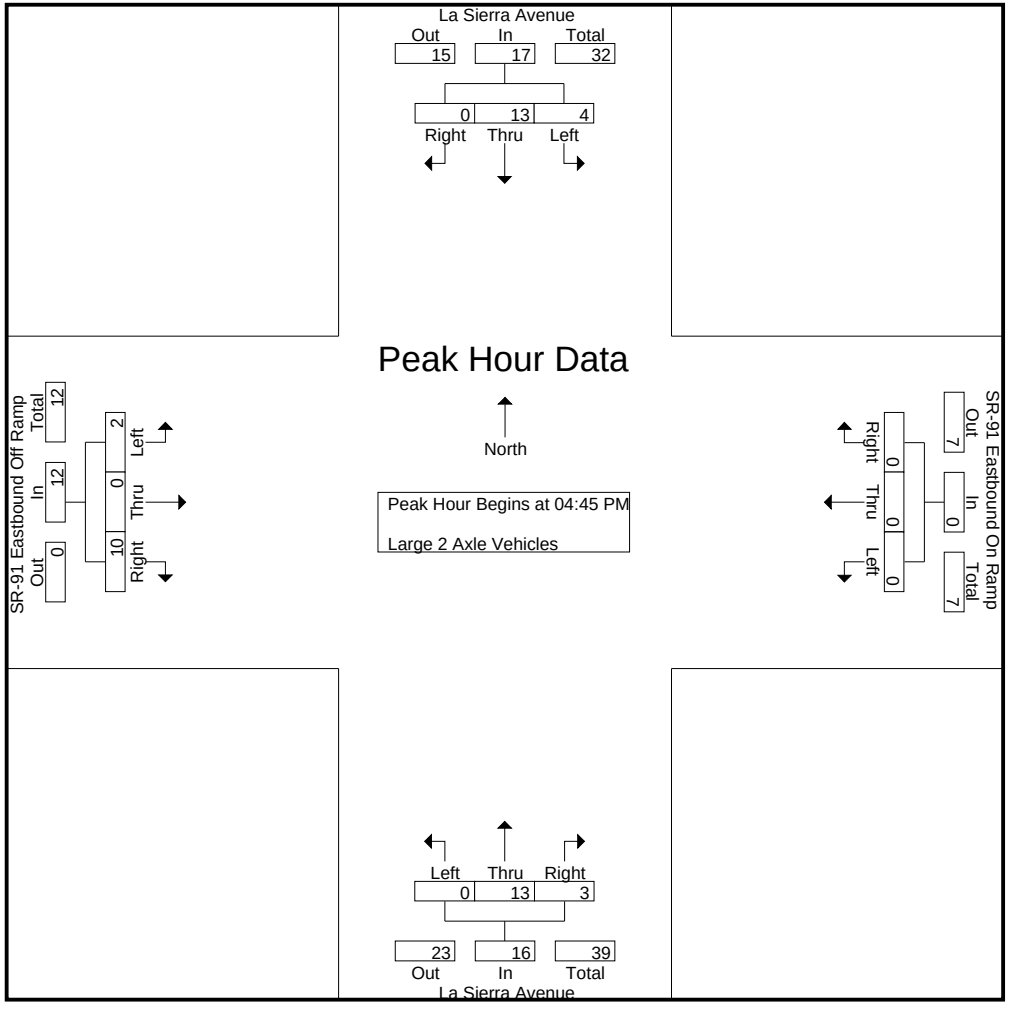

Counts Unlimited, Inc.
PO Box 1178
Corona, CA 92878
(951) 268-6268

City of Riverside
N/S: La Sierra Avenue
E/W: SR-91 Eastbound Ramps
Weather: Clear

File Name : 02_RIV_LS_91E PM
Site Code : 05124383
Start Date : 4/25/2024

	La Sierra Avenue Southbound				SR-91 Eastbound On Ramp Westbound				La Sierra Avenue Northbound				SR-91 Eastbound Off Ramp Eastbound				
Start Time	Left	Thru	Right	App. Total	Left	Thru	Right	App. Total	Left	Thru	Right	App. Total	Left	Thru	Right	App. Total	Int. Total
Peak Hour Analysis From 04:45 PM to 05:30 PM - Peak 1 of 1																	
Peak Hour for Each Approach Begins at:																	
	04:45 PM				04:45 PM				04:45 PM				04:45 PM				
+0 mins.	1	1	0	2	0	0	0	0	0	**7**	**1**	**8**	**1**	0	3	**4**	
+15 mins.	**2**	3	0	5	0	0	0	0	0	1	1	2	0	0	1	1	
+30 mins.	0	**8**	0	**8**	0	0	0	0	0	1	1	2	1	0	2	3	
+45 mins.	1	1	0	2	0	0	0	0	0	4	0	4	0	0	**4**	4	
Total Volume	4	13	0	17	0	0	0	0	0	13	3	16	2	0	10	12	
% App. Total	23.5	76.5	0		0	0	0		0	81.2	18.8		16.7	0	83.3		
PHF	.500	.406	.000	.531	.000	.000	.000	.000	.000	.464	.750	.500	.500	.000	.625	.750	

Counts Unlimited, Inc.
PO Box 1178
Corona, CA 92878
(951) 268-6268

City of Riverside
N/S: La Sierra Avenue
E/W: SR-91 Eastbound Ramps
Weather: Clear

File Name : 02_RIV_LS_91E PM
Site Code : 05124383
Start Date : 4/25/2024

Groups Printed- 3 Axle Vehicles

	La Sierra Avenue Southbound					SR-91 Eastbound On Ramp Westbound					La Sierra Avenue Northbound					SR-91 Eastbound Off Ramp Eastbound							
Start Time	Left	Thru	Right	RTOR	App. Total	Left	Thru	Right	RTOR	App. Total	Left	Thru	Right	RTOR	App. Total	Left	Thru	Right	RTOR	App. Total	Exclu. Total	Inclu. Total	Int. Total
04:00 PM	0	0	0	0	0	0	0	0	0	0	0	0	0	0	0	0	0	1	0	1	0	1	1
04:15 PM	1	0	0	0	1	0	0	0	0	0	0	0	1	0	1	0	0	0	0	0	0	2	2
04:30 PM	0	0	0	0	0	0	0	0	0	0	0	0	0	0	0	0	0	2	0	2	0	2	2
04:45 PM	1	0	0	0	1	0	0	0	0	0	0	0	0	0	0	0	0	1	1	1	1	2	3
Total	2	0	0	0	2	0	0	0	0	0	0	0	1	0	1	0	0	4	1	4	1	7	8
05:00 PM	0	0	0	0	0	0	0	0	0	0	0	3	0	0	3	0	0	0	0	0	0	3	3
05:15 PM	0	1	0	0	1	0	0	0	0	0	0	0	0	0	0	1	0	2	0	3	0	4	4
05:30 PM	1	0	0	0	1	0	0	0	0	0	0	0	0	0	0	0	1	0	0	1	0	2	2
05:45 PM	0	0	0	0	0	0	0	0	0	0	0	0	2	1	2	0	0	0	0	0	1	2	3
Total	1	1	0	0	2	0	0	0	0	0	0	3	2	1	5	1	1	2	0	4	1	11	12
Grand Total	3	1	0	0	4	0	0	0	0	0	0	3	3	1	6	1	1	6	1	8	2	18	20
Apprch %	75	25	0			0	0	0			0	50	50			12.5	12.5	75					
Total %	16.7	5.6	0		22.2	0	0	0		0	0	16.7	16.7		33.3	5.6	5.6	33.3		44.4	10	90	

	La Sierra Avenue Southbound				SR-91 Eastbound On Ramp Westbound				La Sierra Avenue Northbound				SR-91 Eastbound Off Ramp Eastbound				
Start Time	Left	Thru	Right	App. Total	Left	Thru	Right	App. Total	Left	Thru	Right	App. Total	Left	Thru	Right	App. Total	Int. Total
Peak Hour Analysis From 04:45 PM to 05:30 PM - Peak 1 of 1																	
Peak Hour for Entire Intersection Begins at 04:45 PM																	
04:45 PM	**1**	0	0	**1**	0	0	0	0	0	0	0	0	0	0	1	1	2
05:00 PM	0	0	0	0	0	0	0	0	0	**3**	0	**3**	0	0	0	0	3
05:15 PM	0	**1**	0	1	0	0	0	0	0	0	0	0	**1**	0	**2**	**3**	**4**
05:30 PM	1	0	0	1	0	0	0	0	0	0	0	0	0	**1**	0	1	2
Total Volume	2	1	0	3	0	0	0	0	0	3	0	3	1	1	3	5	11
% App. Total	66.7	33.3	0		0	0	0		0	100	0		20	20	60		
PHF	.500	.250	.000	.750	.000	.000	.000	.000	.000	.250	.000	.250	.250	.250	.375	.417	.688

Counts Unlimited, Inc.
PO Box 1178
Corona, CA 92878
(951) 268-6268

City of Riverside
N/S: La Sierra Avenue
E/W: SR-91 Eastbound Ramps
Weather: Clear

File Name : 02_RIV_LS_91E PM
Site Code : 05124383
Start Date : 4/25/2024
Page No : 2

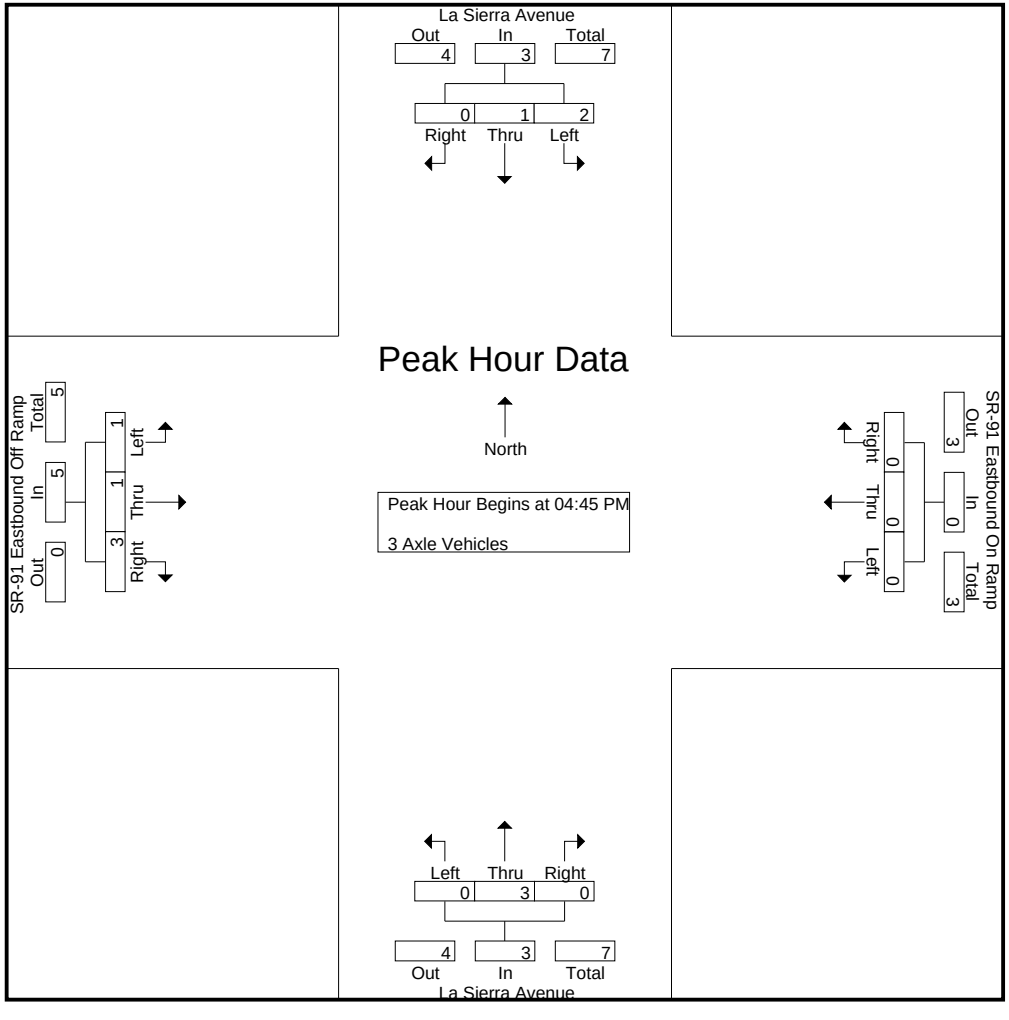

Counts Unlimited, Inc.
PO Box 1178
Corona, CA 92878
(951) 268-6268

City of Riverside
N/S: La Sierra Avenue
E/W: SR-91 Eastbound Ramps
Weather: Clear

File Name : 02_RIV_LS_91E PM
Site Code : 05124383
Start Date : 4/25/2024

	La Sierra Avenue Southbound				SR-91 Eastbound On Ramp Westbound				La Sierra Avenue Northbound				SR-91 Eastbound Off Ramp Eastbound				
Start Time	Left	Thru	Right	App. Total	Left	Thru	Right	App. Total	Left	Thru	Right	App. Total	Left	Thru	Right	App. Total	Int. Total
Peak Hour Analysis From 04:45 PM to 05:30 PM - Peak 1 of 1																	
Peak Hour for Each Approach Begins at:																	
	04:45 PM				04:45 PM				04:45 PM				04:45 PM				
+0 mins.	**1**	0	0	**1**	0	0	0	0	0	0	0	0	0	0	1	1	
+15 mins.	0	0	0	0	0	0	0	0	0	**3**	0	**3**	0	0	0	0	
+30 mins.	0	**1**	0	1	0	0	0	0	0	0	0	0	**1**	0	**2**	**3**	
+45 mins.	1	0	0	1	0	0	0	0	0	0	0	0	0	**1**	0	1	
Total Volume	2	1	0	3	0	0	0	0	0	3	0	3	1	1	3	5	
% App. Total	66.7	33.3	0		0	0	0		0	100	0		20	20	60		
PHF	.500	.250	.000	.750	.000	.000	.000	.000	.000	.250	.000	.250	.250	.250	.375	.417	

Counts Unlimited, Inc.
PO Box 1178
Corona, CA 92878
(951) 268-6268

City of Riverside
N/S: La Sierra Avenue
E/W: SR-91 Eastbound Ramps
Weather: Clear

File Name : 02_RIV_LS_91E PM
Site Code : 05124383
Start Date : 4/25/2024

Groups Printed- 4+ Axle Trucks

	La Sierra Avenue Southbound					SR-91 Eastbound On Ramp Westbound					La Sierra Avenue Northbound					SR-91 Eastbound Off Ramp Eastbound							
Start Time	Left	Thru	Right	RTOR	App. Total	Left	Thru	Right	RTOR	App. Total	Left	Thru	Right	RTOR	App. Total	Left	Thru	Right	RTOR	App. Total	Exclu. Total	Inclu. Total	Int. Total
04:00 PM	1	0	0	0	1	0	0	0	0	0	0	1	1	1	2	0	0	3	1	3	2	6	8
04:15 PM	0	0	0	0	0	0	0	0	0	0	0	2	1	1	3	0	0	2	2	2	3	5	8
04:30 PM	0	0	0	0	0	0	0	0	0	0	0	3	0	0	3	0	0	0	0	0	0	3	3
04:45 PM	0	2	0	0	2	0	0	0	0	0	0	1	0	0	1	0	0	2	1	2	1	5	6
Total	1	2	0	0	3	0	0	0	0	0	0	7	2	2	9	0	0	7	4	7	6	19	25
05:00 PM	0	1	0	0	1	0	0	0	0	0	0	4	0	0	4	0	0	0	0	0	0	5	5
05:15 PM	1	1	0	0	2	0	0	0	0	0	0	3	0	0	3	0	0	3	2	3	2	8	10
05:30 PM	0	1	0	0	1	0	0	0	0	0	0	1	1	1	2	0	0	1	0	1	1	4	5
05:45 PM	0	1	0	0	1	0	0	0	0	0	0	0	0	0	0	0	0	2	0	2	0	3	3
Total	1	4	0	0	5	0	0	0	0	0	0	8	1	1	9	0	0	6	2	6	3	20	23
Grand Total	2	6	0	0	8	0	0	0	0	0	0	15	3	3	18	0	0	13	6	13	9	39	48
Apprch %	25	75	0			0	0	0			0	83.3	16.7			0	0	100					
Total %	5.1	15.4	0		20.5	0	0	0		0	0	38.5	7.7		46.2	0	0	33.3		33.3	18.8	81.2	

	La Sierra Avenue Southbound				SR-91 Eastbound On Ramp Westbound				La Sierra Avenue Northbound				SR-91 Eastbound Off Ramp Eastbound				
Start Time	Left	Thru	Right	App. Total	Left	Thru	Right	App. Total	Left	Thru	Right	App. Total	Left	Thru	Right	App. Total	Int. Total
Peak Hour Analysis From 04:45 PM to 05:30 PM - Peak 1 of 1																	
Peak Hour for Entire Intersection Begins at 04:45 PM																	
04:45 PM	0	**2**	0	**2**	0	0	0	0	0	1	0	1	0	0	2	2	5
05:00 PM	0	1	0	1	0	0	0	0	0	**4**	0	**4**	0	0	0	0	5
05:15 PM	**1**	1	0	2	0	0	0	0	0	3	0	3	0	0	**3**	**3**	**8**
05:30 PM	0	1	0	1	0	0	0	0	0	1	**1**	2	0	0	1	1	4
Total Volume	1	5	0	6	0	0	0	0	0	9	1	10	0	0	6	6	22
% App. Total	16.7	83.3	0		0	0	0		0	90	10		0	0	100		
PHF	.250	.625	.000	.750	.000	.000	.000	.000	.000	.563	.250	.625	.000	.000	.500	.500	.688

Counts Unlimited, Inc.
PO Box 1178
Corona, CA 92878
(951) 268-6268

City of Riverside
N/S: La Sierra Avenue
E/W: SR-91 Eastbound Ramps
Weather: Clear

File Name : 02_RIV_LS_91E PM
Site Code : 05124383
Start Date : 4/25/2024
Page No : 2

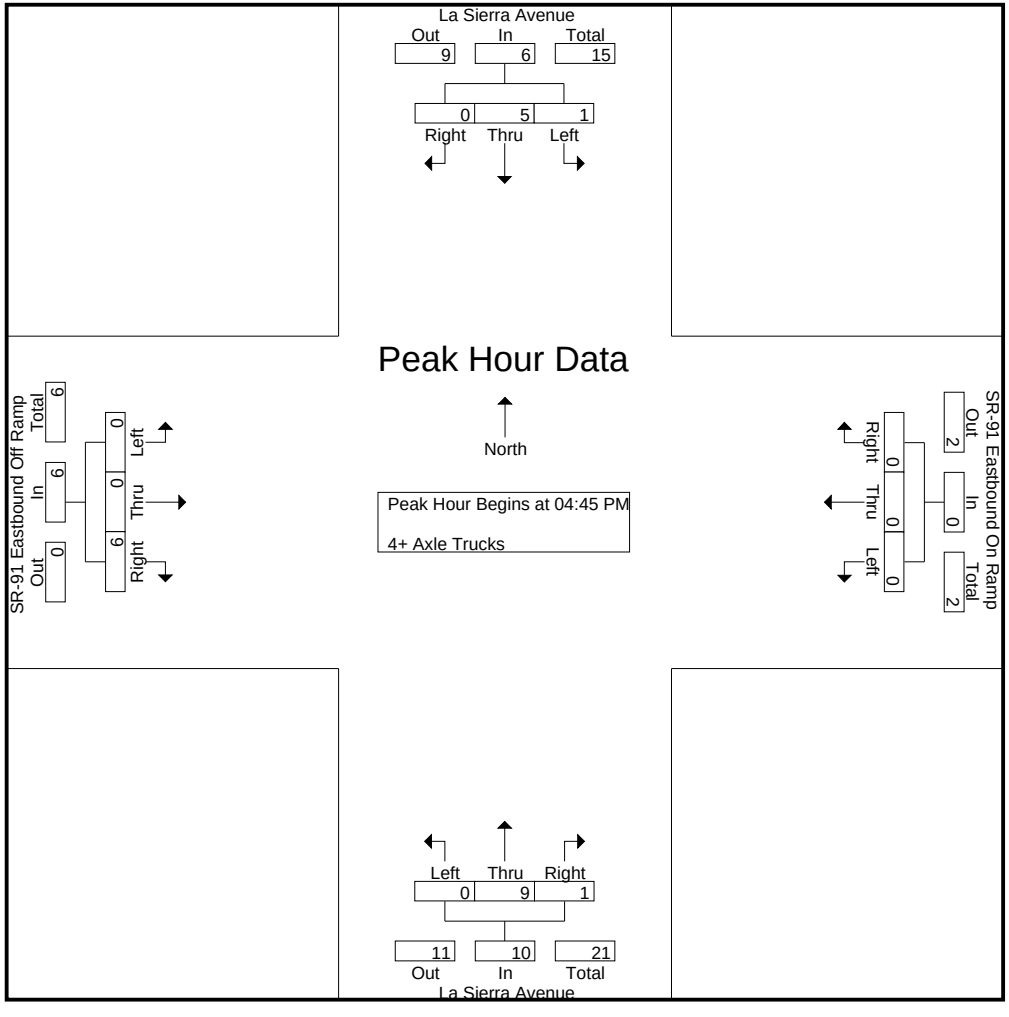

Counts Unlimited, Inc.
PO Box 1178
Corona, CA 92878
(951) 268-6268

City of Riverside
N/S: La Sierra Avenue
E/W: SR-91 Eastbound Ramps
Weather: Clear

File Name : 02_RIV_LS_91E PM
Site Code : 05124383
Start Date : 4/25/2024

	La Sierra Avenue Southbound				SR-91 Eastbound On Ramp Westbound				La Sierra Avenue Northbound				SR-91 Eastbound Off Ramp Eastbound				
Start Time	Left	Thru	Right	App. Total	Left	Thru	Right	App. Total	Left	Thru	Right	App. Total	Left	Thru	Right	App. Total	Int. Total
Peak Hour Analysis From 04:45 PM to 05:30 PM - Peak 1 of 1																	
Peak Hour for Each Approach Begins at:																	
	04:45 PM				04:45 PM				04:45 PM				04:45 PM				
+0 mins.	0	**2**	0	**2**	0	0	0	0	0	1	0	1	0	0	2	2	
+15 mins.	0	1	0	1	0	0	0	0	0	**4**	0	**4**	0	0	0	0	
+30 mins.	**1**	1	0	2	0	0	0	0	0	3	0	3	0	0	**3**	**3**	
+45 mins.	0	1	0	1	0	0	0	0	0	1	**1**	2	0	0	1	1	
Total Volume	1	5	0	6	0	0	0	0	0	9	1	10	0	0	6	6	
% App. Total	16.7	83.3	0		0	0	0		0	90	10		0	0	100		
PHF	.250	.625	.000	.750	.000	.000	.000	.000	.000	.563	.250	.625	.000	.000	.500	.500	

Location: Riverside
N/S: La Sierra Avenue
E/W: SR-91 EB Ramps

Date: 4/25/2024
Day: Thursday

PEDESTRIANS

	North Leg La Sierra Avenue	East Leg SR-91 EB Ramps	South Leg La Sierra Avenue	West Leg SR-91 EB Ramps	
	Pedestrians	Pedestrians	Pedestrians	Pedestrians	
7:00 AM	0	0	0	0	0
7:15 AM	0	0	0	2	2
7:30 AM	0	0	0	4	4
7:45 AM	0	1	0	0	1
8:00 AM	0	2	0	2	4
8:15 AM	0	0	0	1	1
8:30 AM	0	2	0	0	2
8:45 AM	0	2	0	0	2
TOTAL VOLUMES:	0	7	0	9	16

	North Leg La Sierra Avenue	East Leg SR-91 EB Ramps	South Leg La Sierra Avenue	West Leg SR-91 EB Ramps	
	Pedestrians	Pedestrians	Pedestrians	Pedestrians	
4:00 PM	0	0	0	3	3
4:15 PM	0	2	0	3	5
4:30 PM	0	2	0	2	4
4:45 PM	0	0	0	1	1
5:00 PM	0	2	0	2	4
5:15 PM	0	1	0	1	2
5:30 PM	0	0	0	0	0
5:45 PM	0	1	0	1	2
TOTAL VOLUMES:	0	8	0	13	21

Location: Riverside
N/S: La Sierra Avenue
E/W: SR-91 EB Ramps

Date: 4/25/2024
Day: Thursday

BICYCLES

	Southbound La Sierra Avenue			Westbound SR-91 EB Ramps			Northbound La Sierra Avenue			Eastbound SR-91 EB Ramps			
	Left	Thru	Right	Left	Thru	Right	Left	Thru	Right	Left	Thru	Right	
7:00 AM	0	0	0	0	0	0	0	0	0	0	0	0	0
7:15 AM	0	0	0	0	0	0	0	0	0	0	0	0	0
7:30 AM	0	1	0	0	0	0	0	0	0	0	0	0	1
7:45 AM	0	1	0	0	0	0	0	0	0	0	0	0	1
8:00 AM	0	0	0	0	0	0	0	0	0	0	0	0	0
8:15 AM	0	0	0	0	0	0	0	0	0	0	0	0	0
8:30 AM	0	0	0	0	0	0	0	0	0	0	0	0	0
8:45 AM	0	0	0	0	0	0	0	0	0	0	0	0	0
TOTAL VOLUMES:	0	2	0	0	0	0	0	0	0	0	0	0	2

	Southbound La Sierra Avenue			Westbound SR-91 EB Ramps			Northbound La Sierra Avenue			Eastbound SR-91 EB Ramps			
	Left	Thru	Right	Left	Thru	Right	Left	Thru	Right	Left	Thru	Right	
4:00 PM	0	0	0	0	0	0	0	0	0	0	0	0	0
4:15 PM	0	0	0	0	0	0	0	0	0	0	0	0	0
4:30 PM	0	1	0	0	0	0	0	0	0	0	0	0	1
4:45 PM	0	0	0	0	0	0	0	0	0	0	0	0	0
5:00 PM	0	0	0	0	0	0	0	3	0	0	0	0	3
5:15 PM	0	0	0	0	0	0	0	0	0	0	0	0	0
5:30 PM	0	0	0	0	0	0	0	1	0	0	0	0	1
5:45 PM	0	1	0	0	0	0	0	1	0	0	0	0	2
TOTAL VOLUMES:	0	2	0	0	0	0	0	5	0	0	0	0	7

Counts Unlimited, Inc.
PO Box 1178
Corona, CA 92878
(951) 268-6268

City of Riverside
N/S: La Sierra Avenue
E/W: Indiana Avenue
Weather: Clear

File Name : 03_RIV_LS_Ind AM
Site Code : 05124383
Start Date : 4/25/2024
Page No : 1

Groups Printed- Total Volume

	La Sierra Avenue Southbound					Indiana Avenue Westbound					La Sierra Avenue Northbound					Indiana Avenue Eastbound							
Start Time	Left	Thru	Right	RTOR	App. Total	Left	Thru	Right	RTOR	App. Total	Left	Thru	Right	RTOR	App. Total	Left	Thru	Right	RTOR	App. Total	Exclu. Total	Inclu. Total	Int. Total
07:00 AM	18	108	34	13	160	13	27	55	18	95	47	261	10	4	318	76	22	28	11	126	46	699	745
07:15 AM	32	109	65	30	206	16	21	60	25	97	66	316	19	7	401	79	25	17	7	121	69	825	894
07:30 AM	36	192	78	39	306	26	37	82	24	145	56	293	37	16	386	94	47	27	9	168	88	1005	1093
07:45 AM	29	265	93	45	387	29	40	55	14	124	81	335	36	14	452	112	45	31	11	188	84	1151	1235
Total	115	674	270	127	1059	84	125	252	81	461	250	1205	102	41	1557	361	139	103	38	603	287	3680	3967
08:00 AM	25	272	141	62	438	24	67	61	20	152	90	349	33	12	472	123	50	40	13	213	107	1275	1382
08:15 AM	33	165	125	59	323	14	66	53	15	133	100	394	41	16	535	106	58	40	15	204	105	1195	1300
08:30 AM	30	149	62	31	241	18	56	60	21	134	58	221	16	4	295	130	73	56	18	259	74	929	1003
08:45 AM	39	147	52	25	238	16	16	49	20	81	32	273	20	6	325	94	28	31	12	153	63	797	860
Total	127	733	380	177	1240	72	205	223	76	500	280	1237	110	38	1627	453	209	167	58	829	349	4196	4545
Grand Total	242	1407	650	304	2299	156	330	475	157	961	530	2442	212	79	3184	814	348	270	96	1432	636	7876	8512
Apprch %	10.5	61.2	28.3			16.2	34.3	49.4			16.6	76.7	6.7			56.8	24.3	18.9			7.5	92.5	
Total %	3.1	17.9	8.3		29.2	2	4.2	6		12.2	6.7	31	2.7		40.4	10.3	4.4	3.4		18.2			

	La Sierra Avenue Southbound				Indiana Avenue Westbound				La Sierra Avenue Northbound				Indiana Avenue Eastbound				
Start Time	Left	Thru	Right	App. Total	Left	Thru	Right	App. Total	Left	Thru	Right	App. Total	Left	Thru	Right	App. Total	Int. Total
Peak Hour Analysis From 07:00 AM to 08:45 AM - Peak 1 of 1																	
Peak Hour for Entire Intersection Begins at 07:30 AM																	
07:30 AM	**36**	192	78	306	26	37	**82**	145	56	293	37	386	94	47	27	168	1005
07:45 AM	29	265	93	387	**29**	40	55	124	81	335	36	452	112	45	31	188	1151
08:00 AM	25	**272**	**141**	**438**	24	**67**	61	**152**	90	349	33	472	**123**	50	**40**	**213**	**1275**
08:15 AM	33	165	125	323	14	66	53	133	**100**	**394**	**41**	**535**	106	**58**	40	204	1195
Total Volume	123	894	437	1454	93	210	251	554	327	1371	147	1845	435	200	138	773	4626
% App. Total	8.5	61.5	30.1		16.8	37.9	45.3		17.7	74.3	8		56.3	25.9	17.9		
PHF	.854	.822	.775	.830	.802	.784	.765	.911	.818	.870	.896	.862	.884	.862	.863	.907	.907

Counts Unlimited, Inc.
PO Box 1178
Corona, CA 92878
(951) 268-6268

City of Riverside
N/S: La Sierra Avenue
E/W: Indiana Avenue
Weather: Clear

File Name : 03_RIV_LS_Ind AM
Site Code : 05124383
Start Date : 4/25/2024
Page No : 2

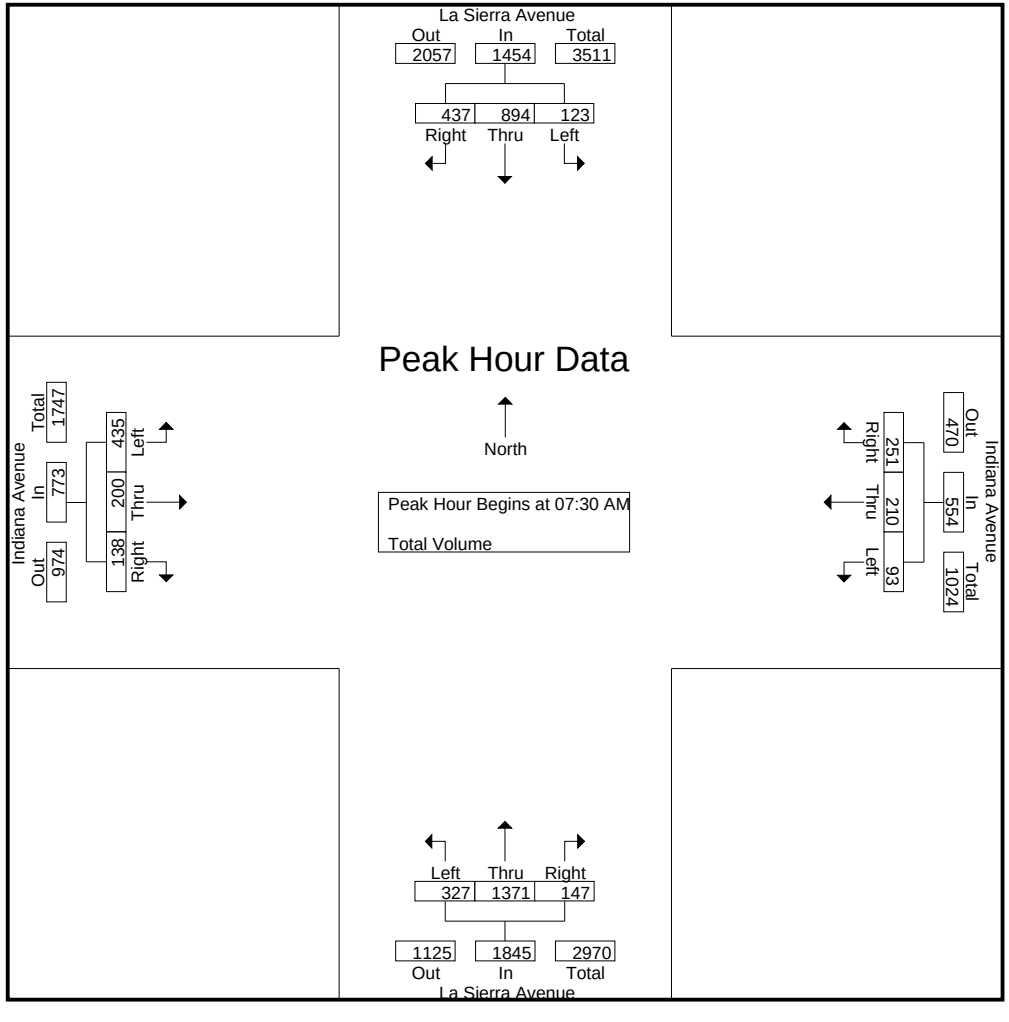

Counts Unlimited, Inc.
PO Box 1178
Corona, CA 92878
(951) 268-6268

City of Riverside
N/S: La Sierra Avenue
E/W: Indiana Avenue
Weather: Clear

File Name : 03_RIV_LS_Ind AM
Site Code : 05124383
Start Date : 4/25/2024

	La Sierra Avenue Southbound				Indiana Avenue Westbound				La Sierra Avenue Northbound				Indiana Avenue Eastbound				
Start Time	Left	Thru	Right	App. Total	Left	Thru	Right	App. Total	Left	Thru	Right	App. Total	Left	Thru	Right	App. Total	Int. Total
Peak Hour Analysis From 07:00 AM to 08:45 AM - Peak 1 of 1																	
Peak Hour for Each Approach Begins at:																	
	07:30 AM				07:30 AM				07:30 AM				07:45 AM				
+0 mins.	**36**	192	78	306	26	37	**82**	145	56	293	37	386	112	45	31	188	
+15 mins.	29	265	93	387	**29**	40	55	124	81	335	36	452	123	50	40	213	
+30 mins.	25	**272**	**141**	**438**	24	**67**	61	**152**	90	349	33	472	106	58	40	204	
+45 mins.	33	165	125	323	14	66	53	133	**100**	**394**	**41**	**535**	**130**	**73**	**56**	**259**	
Total Volume	123	894	437	1454	93	210	251	554	327	1371	147	1845	471	226	167	864	
% App. Total	8.5	61.5	30.1		16.8	37.9	45.3		17.7	74.3	8		54.5	26.2	19.3		
PHF	.854	.822	.775	.830	.802	.784	.765	.911	.818	.870	.896	.862	.906	.774	.746	.834	

Counts Unlimited, Inc.
PO Box 1178
Corona, CA 92878
(951) 268-6268

City of Riverside
N/S: La Sierra Avenue
E/W: Indiana Avenue
Weather: Clear

File Name : 03_RIV_LS_IndPM
Site Code : 05124383
Start Date : 4/25/2024
Page No : 1

Groups Printed- Total Volume

	La Sierra Avenue Southbound					Indiana Avenue Westbound					La Sierra Avenue Northbound					Indiana Avenue Eastbound							
Start Time	Left	Thru	Right	RTOR	App. Total	Left	Thru	Right	RTOR	App. Total	Left	Thru	Right	RTOR	App. Total	Left	Thru	Right	RTOR	App. Total	Exclu. Total	Inclu. Total	Int. Total
04:00 PM	72	348	95	24	515	21	51	68	15	140	59	199	30	13	288	112	104	95	21	311	73	1254	1327
04:15 PM	61	310	74	14	445	34	46	49	13	129	47	215	23	9	285	89	84	102	38	275	74	1134	1208
04:30 PM	66	350	74	16	490	47	61	63	15	171	37	224	23	4	284	74	80	105	36	259	71	1204	1275
04:45 PM	71	344	92	24	507	31	45	50	15	126	53	204	23	8	280	93	77	83	18	253	65	1166	1231
Total	270	1352	335	78	1957	133	203	230	58	566	196	842	99	34	1137	368	345	385	113	1098	283	4758	5041
05:00 PM	69	367	106	27	542	53	67	75	16	195	67	194	24	12	285	103	99	109	25	311	80	1333	1413
05:15 PM	57	389	93	20	539	25	43	47	12	115	43	188	30	14	261	76	88	95	17	259	63	1174	1237
05:30 PM	85	345	82	19	512	43	34	71	11	148	51	211	32	16	294	97	79	79	19	255	65	1209	1274
05:45 PM	97	372	98	30	567	42	18	51	11	111	38	192	36	15	266	79	63	50	11	192	67	1136	1203
Total	308	1473	379	96	2160	163	162	244	50	569	199	785	122	57	1106	355	329	333	72	1017	275	4852	5127
Grand Total	578	2825	714	174	4117	296	365	474	108	1135	395	1627	221	91	2243	723	674	718	185	2115	558	9610	10168
Apprch %	14	68.6	17.3			26.1	32.2	41.8			17.6	72.5	9.9			34.2	31.9	33.9					
Total %	6	29.4	7.4		42.8	3.1	3.8	4.9		11.8	4.1	16.9	2.3		23.3	7.5	7	7.5		22	5.5	94.5	

	La Sierra Avenue Southbound				Indiana Avenue Westbound				La Sierra Avenue Northbound				Indiana Avenue Eastbound				
Start Time	Left	Thru	Right	App. Total	Left	Thru	Right	App. Total	Left	Thru	Right	App. Total	Left	Thru	Right	App. Total	Int. Total
Peak Hour Analysis From 04:00 PM to 05:45 PM - Peak 1 of 1																	
Peak Hour for Entire Intersection Begins at 04:45 PM																	
04:45 PM	71	344	92	507	31	45	50	126	53	204	23	280	93	77	83	253	1166
05:00 PM	69	367	**106**	**542**	**53**	**67**	**75**	**195**	**67**	194	24	285	**103**	**99**	**109**	**311**	**1333**
05:15 PM	57	**389**	93	539	25	43	47	115	43	188	30	261	76	88	95	259	1174
05:30 PM	**85**	345	82	512	43	34	71	148	51	**211**	**32**	**294**	97	79	79	255	1209
Total Volume	282	1445	373	2100	152	189	243	584	214	797	109	1120	369	343	366	1078	4882
% App. Total	13.4	68.8	17.8		26	32.4	41.6		19.1	71.2	9.7		34.2	31.8	34		
PHF	.829	.929	.880	.969	.717	.705	.810	.749	.799	.944	.852	.952	.896	.866	.839	.867	.916

Counts Unlimited, Inc.
PO Box 1178
Corona, CA 92878
(951) 268-6268

City of Riverside
N/S: La Sierra Avenue
E/W: Indiana Avenue
Weather: Clear

File Name : 03_RIV_LS_IndPM
Site Code : 05124383
Start Date : 4/25/2024
Page No : 2

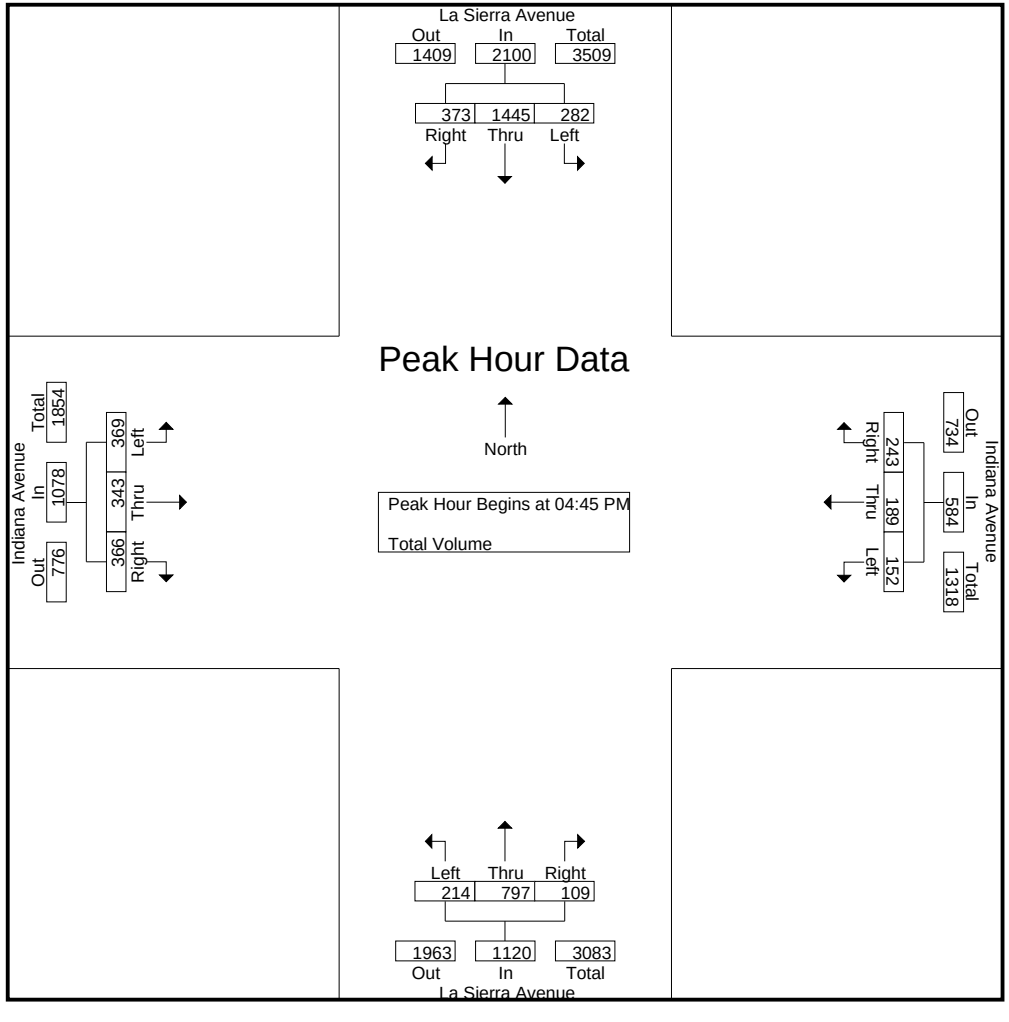

Counts Unlimited, Inc.
PO Box 1178
Corona, CA 92878
(951) 268-6268

City of Riverside
N/S: La Sierra Avenue
E/W: Indiana Avenue
Weather: Clear

File Name : 03_RIV_LS_IndPM
Site Code : 05124383
Start Date : 4/25/2024

	La Sierra Avenue Southbound				Indiana Avenue Westbound				La Sierra Avenue Northbound				Indiana Avenue Eastbound				
Start Time	Left	Thru	Right	App. Total	Left	Thru	Right	App. Total	Left	Thru	Right	App. Total	Left	Thru	Right	App. Total	Int. Total
Peak Hour Analysis From 04:00 PM to 05:45 PM - Peak 1 of 1																	
Peak Hour for Each Approach Begins at:																	
	05:00 PM				04:15 PM				04:00 PM				04:00 PM				
+0 mins.	69	367	**106**	542	34	46	49	129	**59**	199	**30**	**288**	**112**	**104**	95	**311**	
+15 mins.	57	**389**	93	539	47	61	63	171	47	215	23	285	89	84	102	275	
+30 mins.	85	345	82	512	31	45	50	126	37	**224**	23	284	74	80	**105**	259	
+45 mins.	**97**	372	98	**567**	**53**	**67**	**75**	**195**	53	204	23	280	93	77	83	253	
Total Volume	308	1473	379	2160	165	219	237	621	196	842	99	1137	368	345	385	1098	
% App. Total	14.3	68.2	17.5		26.6	35.3	38.2		17.2	74.1	8.7		33.5	31.4	35.1		
PHF	.794	.947	.894	.952	.778	.817	.790	.796	.831	.940	.825	.987	.821	.829	.917	.883	

Location: Riverside
N/S: La Sierra Avenue
E/W: Indiana Avenue

Date: 4/25/2024
Day: Thursday

PEDESTRIANS

	North Leg La Sierra Avenue	East Leg Indiana Avenue	South Leg La Sierra Avenue	West Leg Indiana Avenue	
	Pedestrians	Pedestrians	Pedestrians	Pedestrians	
7:00 AM	1	0	0	2	3
7:15 AM	0	0	2	4	6
7:30 AM	0	1	0	0	1
7:45 AM	1	1	0	5	7
8:00 AM	1	0	1	3	5
8:15 AM	1	0	0	0	1
8:30 AM	1	1	1	1	4
8:45 AM	0	0	0	0	0
TOTAL VOLUMES:	5	3	4	15	27

	North Leg La Sierra Avenue	East Leg Indiana Avenue	South Leg La Sierra Avenue	West Leg Indiana Avenue	
	Pedestrians	Pedestrians	Pedestrians	Pedestrians	
4:00 PM	1	3	7	1	12
4:15 PM	0	0	0	4	4
4:30 PM	2	0	1	5	8
4:45 PM	0	0	0	5	5
5:00 PM	1	2	4	3	10
5:15 PM	2	0	2	1	5
5:30 PM	0	4	3	4	11
5:45 PM	0	0	0	5	5
TOTAL VOLUMES:	6	9	17	28	60

Counts Unlimited, Inc.
PO Box 1178
Corona, CA 92878
951-268-6268

Location: Riverside
N/S: La Sierra Avenue
E/W: Indiana Avenue

Date: 4/25/2024
Day: Thursday

BICYCLES

	Southbound La Sierra Avenue			Westbound Indiana Avenue			Northbound La Sierra Avenue			Eastbound Indiana Avenue			
	Left	Thru	Right	Left	Thru	Right	Left	Thru	Right	Left	Thru	Right	
7:00 AM	0	0	0	0	0	0	0	0	0	0	0	0	0
7:15 AM	0	0	0	0	0	0	0	0	0	0	0	0	0
7:30 AM	1	1	0	0	0	0	0	0	0	0	0	0	2
7:45 AM	0	1	0	0	0	0	0	0	0	0	0	0	1
8:00 AM	0	0	0	0	0	0	0	0	0	0	0	0	0
8:15 AM	0	0	0	0	0	0	0	0	0	0	0	0	0
8:30 AM	0	0	0	0	0	0	0	0	0	0	0	0	0
8:45 AM	0	0	0	0	0	0	0	0	0	0	0	0	0
TOTAL VOLUMES:	1	2	0	0	0	0	0	0	0	0	0	0	3

	Southbound La Sierra Avenue			Westbound Indiana Avenue			Northbound La Sierra Avenue			Eastbound Indiana Avenue			
	Left	Thru	Right	Left	Thru	Right	Left	Thru	Right	Left	Thru	Right	
4:00 PM	0	0	0	0	0	0	0	0	0	0	0	0	0
4:15 PM	0	0	0	0	0	0	0	0	0	0	0	0	0
4:30 PM	0	0	0	0	0	0	0	0	0	0	0	0	0
4:45 PM	1	0	0	0	0	0	0	0	0	0	1	0	2
5:00 PM	0	0	0	0	1	0	0	0	0	0	0	0	1
5:15 PM	0	0	0	0	0	0	0	0	0	0	0	0	0
5:30 PM	1	0	0	0	0	0	0	0	0	0	0	0	1
5:45 PM	0	0	0	0	0	0	0	0	0	0	0	0	0
TOTAL VOLUMES:	2	0	0	0	1	0	0	0	0	0	1	0	4

Counts Unlimited, Inc.
PO Box 1178
Corona, CA 92878
951-268-6268

Counts Unlimited, Inc.
PO Box 1178
Corona, CA 92878
(951) 268-6268

City of Riverside
N/S: La Sierra Avenue
E/W: Victoria Avenue
Weather: Clear

File Name : 04_RIV_LS_Vic AM
Site Code : 05124383
Start Date : 4/25/2024
Page No : 1

Groups Printed- Total Volume

	La Sierra Avenue Southbound					Victoria Avenue Westbound					La Sierra Avenue Northbound					Victoria Avenue Eastbound							
Start Time	Left	Thru	Right	RTOR	App. Total	Left	Thru	Right	RTOR	App. Total	Left	Thru	Right	RTOR	App. Total	Left	Thru	Right	RTOR	App. Total	Exclu. Total	Inclu. Total	Int. Total
07:00 AM	12	89	3	0	104	12	15	28	12	55	9	241	21	8	271	11	9	7	7	27	27	457	484
07:15 AM	12	95	7	0	114	7	14	34	14	55	7	275	37	4	319	25	14	8	6	47	24	535	559
07:30 AM	19	108	4	0	131	16	25	37	19	78	7	262	43	13	312	8	20	16	11	44	43	565	608
07:45 AM	27	124	5	1	156	11	25	45	16	81	13	255	46	4	314	9	20	14	5	43	26	594	620
Total	70	416	19	1	505	46	79	144	61	269	36	1033	147	29	1216	53	63	45	29	161	120	2151	2271
08:00 AM	33	150	10	0	193	24	22	83	25	129	7	243	53	6	303	17	24	17	11	58	42	683	725
08:15 AM	27	136	7	0	170	15	21	37	16	73	14	257	43	3	314	12	13	9	8	34	27	591	618
08:30 AM	20	131	7	1	158	10	20	34	17	64	5	204	21	1	230	12	14	4	3	30	22	482	504
08:45 AM	16	108	5	1	129	13	8	28	14	49	4	227	18	1	249	19	14	3	2	36	18	463	481
Total	96	525	29	2	650	62	71	182	72	315	30	931	135	11	1096	60	65	33	24	158	109	2219	2328
Grand Total	166	941	48	3	1155	108	150	326	133	584	66	1964	282	40	2312	113	128	78	53	319	229	4370	4599
Apprch %	14.4	81.5	4.2			18.5	25.7	55.8			2.9	84.9	12.2			35.4	40.1	24.5					
Total %	3.8	21.5	1.1		26.4	2.5	3.4	7.5		13.4	1.5	44.9	6.5		52.9	2.6	2.9	1.8		7.3	5	95	

	La Sierra Avenue Southbound				Victoria Avenue Westbound				La Sierra Avenue Northbound				Victoria Avenue Eastbound				
Start Time	Left	Thru	Right	App. Total	Left	Thru	Right	App. Total	Left	Thru	Right	App. Total	Left	Thru	Right	App. Total	Int. Total
Peak Hour Analysis From 07:00 AM to 08:45 AM - Peak 1 of 1																	
Peak Hour for Entire Intersection Begins at 07:30 AM																	
07:30 AM	19	108	4	131	16	**25**	37	78	7	**262**	43	312	8	20	16	44	565
07:45 AM	27	124	5	156	11	25	45	81	13	255	46	**314**	9	20	14	43	594
08:00 AM	**33**	**150**	**10**	**193**	**24**	22	**83**	**129**	7	243	**53**	303	**17**	**24**	**17**	**58**	**683**
08:15 AM	27	136	7	170	15	21	37	73	**14**	257	43	314	12	13	9	34	591
Total Volume	106	518	26	650	66	93	202	361	41	1017	185	1243	46	77	56	179	2433
% App. Total	16.3	79.7	4		18.3	25.8	56		3.3	81.8	14.9		25.7	43	31.3		
PHF	.803	.863	.650	.842	.688	.930	.608	.700	.732	.970	.873	.990	.676	.802	.824	.772	.891

Counts Unlimited, Inc.
PO Box 1178
Corona, CA 92878
(951) 268-6268

City of Riverside
N/S: La Sierra Avenue
E/W: Victoria Avenue
Weather: Clear

File Name : 04_RIV_LS_Vic AM
Site Code : 05124383
Start Date : 4/25/2024
Page No : 2

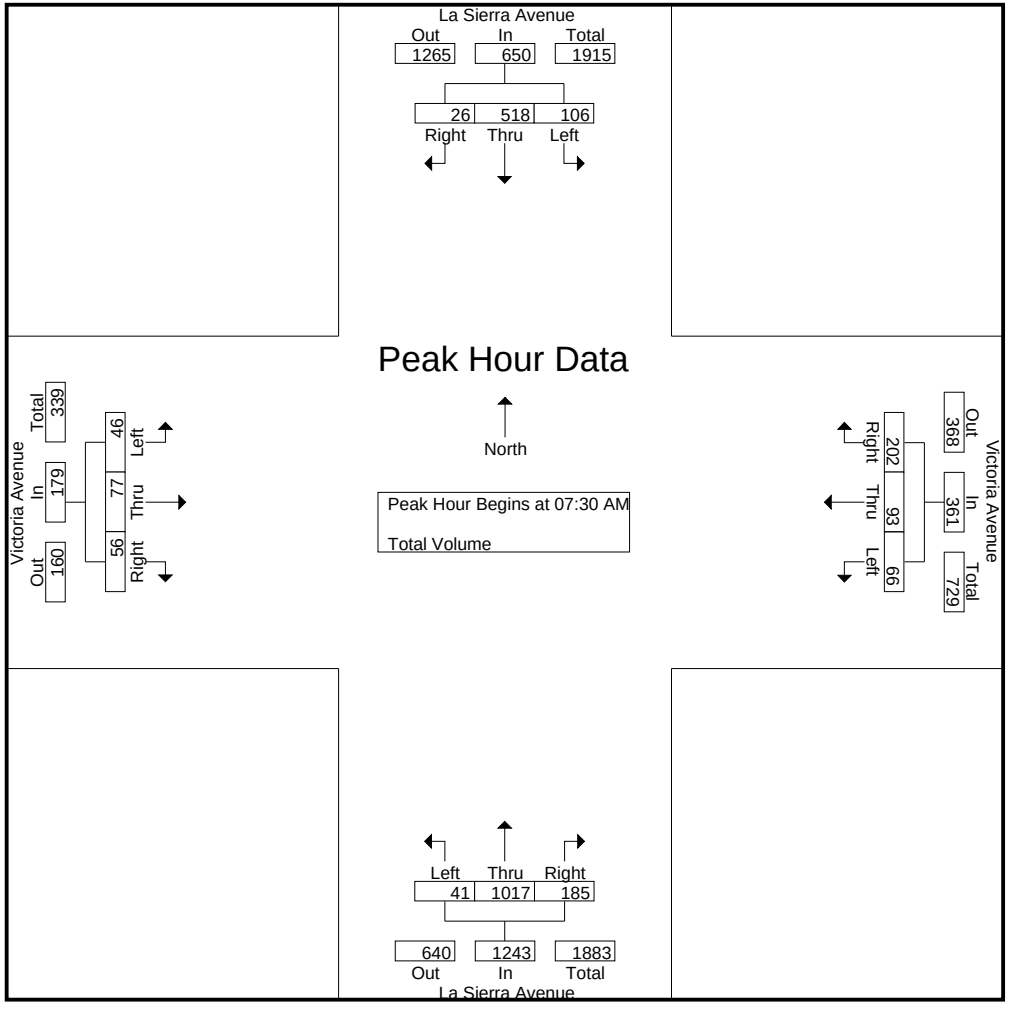

Counts Unlimited, Inc.
PO Box 1178
Corona, CA 92878
(951) 268-6268

City of Riverside
N/S: La Sierra Avenue
E/W: Victoria Avenue
Weather: Clear

File Name : 04_RIV_LS_Vic AM
Site Code : 05124383
Start Date : 4/25/2024

	La Sierra Avenue Southbound				Victoria Avenue Westbound				La Sierra Avenue Northbound				Victoria Avenue Eastbound				
Start Time	Left	Thru	Right	App. Total	Left	Thru	Right	App. Total	Left	Thru	Right	App. Total	Left	Thru	Right	App. Total	Int. Total
Peak Hour Analysis From 07:00 AM to 08:45 AM - Peak 1 of 1																	
Peak Hour for Each Approach Begins at:																	
	07:45 AM				07:30 AM				07:15 AM				07:15 AM				
+0 mins.	27	124	5	156	16	**25**	37	78	7	**275**	37	**319**	**25**	14	8	47	
+15 mins.	**33**	**150**	**10**	**193**	11	25	45	81	7	262	43	312	8	20	16	44	
+30 mins.	27	136	7	170	**24**	22	**83**	**129**	**13**	255	46	314	9	20	14	43	
+45 mins.	20	131	7	158	15	21	37	73	7	243	**53**	303	17	**24**	**17**	**58**	
Total Volume	107	541	29	677	66	93	202	361	34	1035	179	1248	59	78	55	192	
% App. Total	15.8	79.9	4.3		18.3	25.8	56		2.7	82.9	14.3		30.7	40.6	28.6		
PHF	.811	.902	.725	.877	.688	.930	.608	.700	.654	.941	.844	.978	.590	.813	.809	.828	

Counts Unlimited, Inc.
PO Box 1178
Corona, CA 92878
(951) 268-6268

City of Riverside
N/S: La Sierra Avenue
E/W: Victoria Avenue
Weather: Clear

File Name : 04_RIV_LS_Vic PM
Site Code : 05124383
Start Date : 4/25/2024
Page No : 1

Groups Printed- Total Volume

	La Sierra Avenue Southbound					Victoria Avenue Westbound					La Sierra Avenue Northbound					Victoria Avenue Eastbound							
Start Time	Left	Thru	Right	RTOR	App. Total	Left	Thru	Right	RTOR	App. Total	Left	Thru	Right	RTOR	App. Total	Left	Thru	Right	RTOR	App. Total	Exclu. Total	Inclu. Total	Int. Total
04:00 PM	50	340	3	1	393	50	20	27	8	97	7	190	54	10	251	16	22	39	8	77	27	818	845
04:15 PM	29	325	14	5	368	56	18	29	15	103	5	193	41	7	239	5	30	23	6	58	33	768	801
04:30 PM	51	331	13	3	395	51	20	39	21	110	6	183	36	8	225	11	28	34	18	73	50	803	853
04:45 PM	48	341	15	5	404	63	23	43	16	129	7	178	38	13	223	13	33	28	4	74	38	830	868
Total	178	1337	45	14	1560	220	81	138	60	439	25	744	169	38	938	45	113	124	36	282	148	3219	3367
05:00 PM	39	333	12	3	384	74	14	35	10	123	6	155	28	9	189	14	29	48	15	91	37	787	824
05:15 PM	43	389	15	8	447	63	17	41	17	121	5	187	38	7	230	16	19	45	10	80	42	878	920
05:30 PM	59	318	21	5	398	60	21	53	24	134	9	183	21	9	213	15	23	26	8	64	46	809	855
05:45 PM	45	309	20	4	374	54	11	29	3	94	1	147	28	4	176	9	24	23	8	56	19	700	719
Total	186	1349	68	20	1603	251	63	158	54	472	21	672	115	29	808	54	95	142	41	291	144	3174	3318
Grand Total	364	2686	113	34	3163	471	144	296	114	911	46	1416	284	67	1746	99	208	266	77	573	292	6393	6685
Apprch %	11.5	84.9	3.6			51.7	15.8	32.5			2.6	81.1	16.3			17.3	36.3	46.4					
Total %	5.7	42	1.8		49.5	7.4	2.3	4.6		14.2	0.7	22.1	4.4		27.3	1.5	3.3	4.2		9	4.4	95.6	

	La Sierra Avenue Southbound				Victoria Avenue Westbound				La Sierra Avenue Northbound				Victoria Avenue Eastbound				
Start Time	Left	Thru	Right	App. Total	Left	Thru	Right	App. Total	Left	Thru	Right	App. Total	Left	Thru	Right	App. Total	Int. Total
Peak Hour Analysis From 04:00 PM to 05:45 PM - Peak 1 of 1																	
Peak Hour for Entire Intersection Begins at 04:45 PM																	
04:45 PM	48	341	15	404	63	**23**	43	129	7	178	**38**	223	13	**33**	28	74	830
05:00 PM	39	333	12	384	**74**	14	35	123	6	155	28	189	14	29	**48**	**91**	787
05:15 PM	43	**389**	15	**447**	63	17	41	121	5	**187**	38	**230**	**16**	19	45	80	**878**
05:30 PM	**59**	318	**21**	398	60	21	**53**	**134**	**9**	183	21	213	15	23	26	64	809
Total Volume	189	1381	63	1633	260	75	172	507	27	703	125	855	58	104	147	309	3304
% App. Total	11.6	84.6	3.9		51.3	14.8	33.9		3.2	82.2	14.6		18.8	33.7	47.6		
PHF	.801	.888	.750	.913	.878	.815	.811	.946	.750	.940	.822	.929	.906	.788	.766	.849	.941

Counts Unlimited, Inc.
PO Box 1178
Corona, CA 92878
(951) 268-6268

City of Riverside
N/S: La Sierra Avenue
E/W: Victoria Avenue
Weather: Clear

File Name : 04_RIV_LS_Vic PM
Site Code : 05124383
Start Date : 4/25/2024
Page No : 2

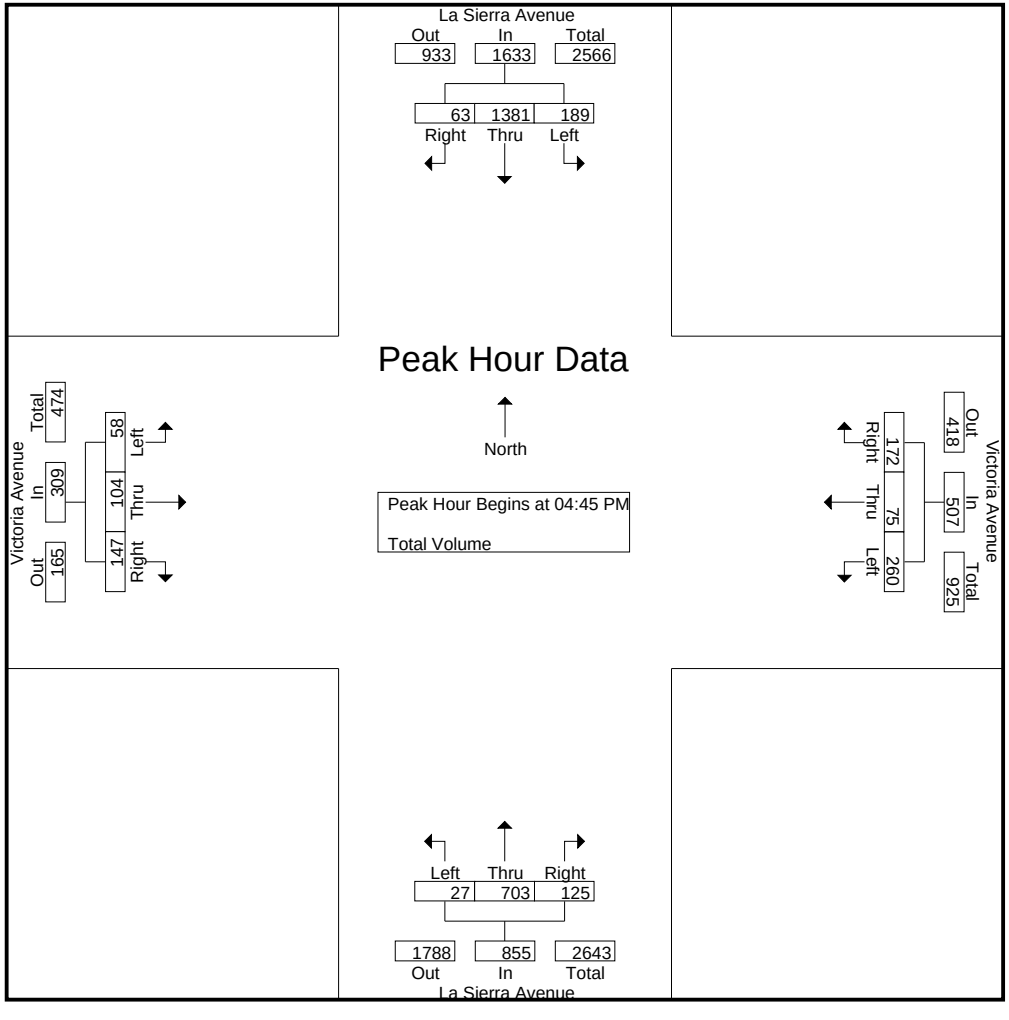

Counts Unlimited, Inc.
PO Box 1178
Corona, CA 92878
(951) 268-6268

City of Riverside
N/S: La Sierra Avenue
E/W: Victoria Avenue
Weather: Clear

File Name : 04_RIV_LS_Vic PM
Site Code : 05124383
Start Date : 4/25/2024

	La Sierra Avenue Southbound				Victoria Avenue Westbound				La Sierra Avenue Northbound				Victoria Avenue Eastbound				
Start Time	Left	Thru	Right	App. Total	Left	Thru	Right	App. Total	Left	Thru	Right	App. Total	Left	Thru	Right	App. Total	Int. Total
Peak Hour Analysis From 04:00 PM to 05:45 PM - Peak 1 of 1																	
Peak Hour for Each Approach Begins at:																	
	04:45 PM				04:45 PM				04:00 PM				04:30 PM				
+0 mins.	48	341	15	404	63	**23**	43	129	**7**	190	**54**	**251**	11	28	34	73	
+15 mins.	39	333	12	384	**74**	14	35	123	5	**193**	41	239	13	**33**	28	74	
+30 mins.	43	**389**	15	**447**	63	17	41	121	6	183	36	225	14	29	**48**	**91**	
+45 mins.	**59**	318	**21**	398	60	21	**53**	**134**	7	178	38	223	**16**	19	45	80	
Total Volume	189	1381	63	1633	260	75	172	507	25	744	169	938	54	109	155	318	
% App. Total	11.6	84.6	3.9		51.3	14.8	33.9		2.7	79.3	18		17	34.3	48.7		
PHF	.801	.888	.750	.913	.878	.815	.811	.946	.893	.964	.782	.934	.844	.826	.807	.874	

Location: Riverside
N/S: La Sierra Avenue
E/W: Victoria Avenue

Date: 4/25/2024
Day: Thursday

PEDESTRIANS

	North Leg La Sierra Avenue	East Leg Victoria Avenue	South Leg La Sierra Avenue	West Leg Victoria Avenue	
	Pedestrians	Pedestrians	Pedestrians	Pedestrians	
7:00 AM	2	0	0	0	2
7:15 AM	0	0	0	0	0
7:30 AM	0	0	0	0	0
7:45 AM	1	0	0	0	1
8:00 AM	0	0	0	0	0
8:15 AM	3	0	0	0	3
8:30 AM	0	0	0	0	0
8:45 AM	3	0	0	0	3
TOTAL VOLUMES:	9	0	0	0	9

	North Leg La Sierra Avenue	East Leg Victoria Avenue	South Leg La Sierra Avenue	West Leg Victoria Avenue	
	Pedestrians	Pedestrians	Pedestrians	Pedestrians	
4:00 PM	1	0	0	0	1
4:15 PM	0	0	0	0	0
4:30 PM	0	0	0	0	0
4:45 PM	0	0	0	0	0
5:00 PM	0	0	0	0	0
5:15 PM	0	0	0	0	0
5:30 PM	0	0	0	0	0
5:45 PM	0	0	0	0	0
TOTAL VOLUMES:	1	0	0	0	1

Counts Unlimited, Inc.
PO Box 1178
Corona, CA 92878
951-268-6268

Location: Riverside
N/S: La Sierra Avenue
E/W: Victoria Avenue

Date: 4/25/2024
Day: Thursday

BICYCLES

	Southbound La Sierra Avenue			Westbound Victoria Avenue			Northbound La Sierra Avenue			Eastbound Victoria Avenue			
	Left	Thru	Right	Left	Thru	Right	Left	Thru	Right	Left	Thru	Right	
7:00 AM	0	0	0	1	1	0	0	0	0	0	0	0	2
7:15 AM	0	0	0	0	0	0	0	0	0	0	0	0	0
7:30 AM	0	0	0	0	0	0	0	0	0	0	1	0	1
7:45 AM	0	0	0	0	1	0	0	0	0	0	0	0	1
8:00 AM	0	0	0	0	0	0	0	0	0	0	0	0	0
8:15 AM	0	0	0	0	0	0	0	0	0	0	0	0	0
8:30 AM	0	0	0	0	1	0	0	0	0	0	0	0	1
8:45 AM	0	0	0	0	3	0	1	0	0	0	4	0	8
TOTAL VOLUMES:	0	0	0	1	6	0	1	0	0	0	5	0	13

	Southbound La Sierra Avenue			Westbound Victoria Avenue			Northbound La Sierra Avenue			Eastbound Victoria Avenue			
	Left	Thru	Right	Left	Thru	Right	Left	Thru	Right	Left	Thru	Right	
4:00 PM	0	0	0	0	0	0	0	0	0	0	2	0	2
4:15 PM	0	0	0	0	0	0	0	0	0	0	0	0	0
4:30 PM	0	0	0	0	1	0	0	0	0	0	0	1	2
4:45 PM	0	0	0	0	0	0	0	0	0	0	1	0	1
5:00 PM	0	0	0	0	1	0	0	0	0	0	0	0	1
5:15 PM	0	0	0	0	0	0	0	0	0	0	0	0	0
5:30 PM	0	0	0	0	1	0	0	0	0	0	0	1	2
5:45 PM	0	0	0	0	0	0	0	0	0	0	0	0	0
TOTAL VOLUMES:	0	0	0	0	3	0	0	0	0	0	3	2	8

Counts Unlimited, Inc.
PO Box 1178
Corona, CA 92878
951-268-6268

Counts Unlimited, Inc.
PO Box 1178
Corona, CA 92878
(951) 268-6268

City of Riverside
N/S: La Sierra Avenue
E/W: McAllister Parkway
Weather: Clear

File Name : 05_RIV_LS_McA AM
Site Code : 05124383
Start Date : 4/25/2024
Page No : 1

Groups Printed- Total Volume

	La Sierra Avenue Southbound			McAllister Parkway Westbound				La Sierra Avenue Northbound						
Start Time	Left	Thru	App. Total	Left	Right	RTOR	App. Total	Thru	Right	RTOR	App. Total	Exclu. Total	Inclu. Total	Int. Total
07:00 AM	13	97	110	2	44	34	46	227	3	1	230	35	386	421
07:15 AM	11	95	106	3	60	26	63	282	3	0	285	26	454	480
07:30 AM	18	120	138	2	66	30	68	244	2	0	246	30	452	482
07:45 AM	24	134	158	8	54	24	62	263	5	0	268	24	488	512
Total	66	446	512	15	224	114	239	1016	13	1	1029	115	1780	1895
08:00 AM	26	157	183	5	48	21	53	303	12	3	315	24	551	575
08:15 AM	31	125	156	1	53	30	54	239	4	0	243	30	453	483
08:30 AM	31	107	138	3	35	22	38	198	2	1	200	23	376	399
08:45 AM	21	109	130	0	40	23	40	229	2	0	231	23	401	424
Total	109	498	607	9	176	96	185	969	20	4	989	100	1781	1881
Grand Total	175	944	1119	24	400	210	424	1985	33	5	2018	215	3561	3776
Apprch %	15.6	84.4		5.7	94.3			98.4	1.6					
Total %	4.9	26.5	31.4	0.7	11.2		11.9	55.7	0.9		56.7	5.7	94.3	

	La Sierra Avenue Southbound			McAllister Parkway Westbound			La Sierra Avenue Northbound			
Start Time	Left	Thru	App. Total	Left	Right	App. Total	Thru	Right	App. Total	Int. Total
Peak Hour Analysis From 07:00 AM to 08:45 AM - Peak 1 of 1										
Peak Hour for Entire Intersection Begins at 07:15 AM										
07:15 AM	11	95	106	3	60	63	282	3	285	454
07:30 AM	18	120	138	2	**66**	**68**	244	2	246	452
07:45 AM	24	134	158	**8**	54	62	263	5	268	488
08:00 AM	**26**	**157**	**183**	5	48	53	**303**	**12**	**315**	**551**
Total Volume	79	506	585	18	228	246	1092	22	1114	1945
% App. Total	13.5	86.5		7.3	92.7		98	2		
PHF	.760	.806	.799	.563	.864	.904	.901	.458	.884	.882

Counts Unlimited, Inc.
PO Box 1178
Corona, CA 92878
(951) 268-6268

City of Riverside
N/S: La Sierra Avenue
E/W: McAllister Parkway
Weather: Clear

File Name : 05_RIV_LS_McA AM
Site Code : 05124383
Start Date : 4/25/2024
Page No : 2

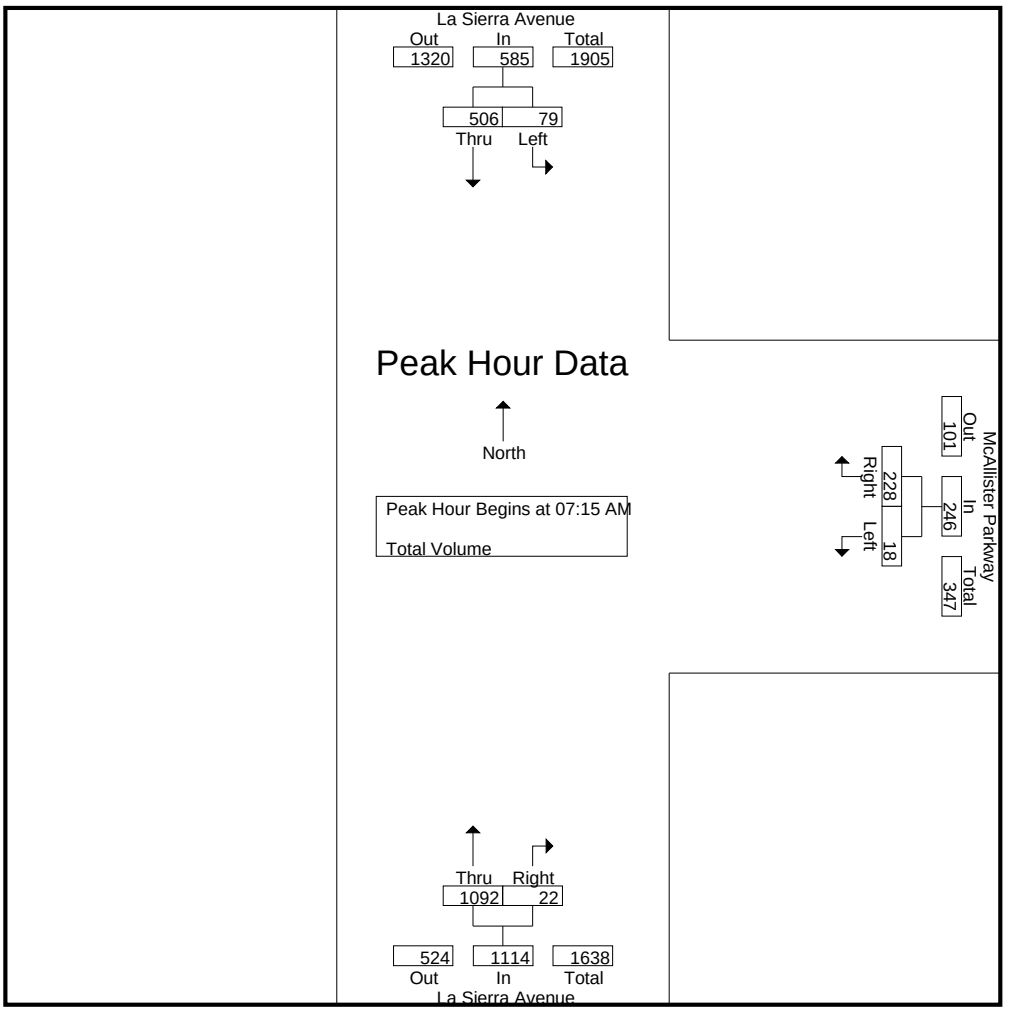

Peak Hour Analysis From 07:00 AM to 08:45 AM - Peak 1 of 1
Peak Hour for Each Approach Begins at:

	07:30 AM			07:15 AM			07:15 AM		
+0 mins.	18	120	138	3	60	63	282	3	285
+15 mins.	24	134	158	2	**66**	**68**	244	2	246
+30 mins.	26	**157**	**183**	**8**	54	62	263	5	268
+45 mins.	**31**	125	156	5	48	53	**303**	**12**	**315**
Total Volume	99	536	635	18	228	246	1092	22	1114
% App. Total	15.6	84.4		7.3	92.7		98	2	
PHF	.798	.854	.867	.563	.864	.904	.901	.458	.884

Counts Unlimited, Inc.
PO Box 1178
Corona, CA 92878
(951) 268-6268

City of Riverside
N/S: La Sierra Avenue
E/W: McAllister Parkway
Weather: Clear

File Name : 05_RIV_LS_McA PM
Site Code : 05124383
Start Date : 4/25/2024
Page No : 1

Groups Printed- Total Volume

	La Sierra Avenue Southbound			McAllister Parkway Westbound				La Sierra Avenue Northbound						
Start Time	Left	Thru	App. Total	Left	Right	RTOR	App. Total	Thru	Right	RTOR	App. Total	Exclu. Total	Inclu. Total	Int. Total
04:00 PM	69	364	433	1	35	24	36	210	4	0	214	24	683	707
04:15 PM	76	318	394	4	35	17	39	200	2	0	202	17	635	652
04:30 PM	53	353	406	2	34	22	36	183	3	0	186	22	628	650
04:45 PM	74	340	414	2	32	20	34	190	0	0	190	20	638	658
Total	272	1375	1647	9	136	83	145	783	9	0	792	83	2584	2667
05:00 PM	61	401	462	2	35	24	37	162	5	0	167	24	666	690
05:15 PM	67	406	473	3	41	30	44	174	2	0	176	30	693	723
05:30 PM	69	340	409	1	42	26	43	180	5	0	185	26	637	663
05:45 PM	60	333	393	3	39	25	42	126	3	0	129	25	564	589
Total	257	1480	1737	9	157	105	166	642	15	0	657	105	2560	2665
Grand Total	529	2855	3384	18	293	188	311	1425	24	0	1449	188	5144	5332
Apprch %	15.6	84.4		5.8	94.2			98.3	1.7					
Total %	10.3	55.5	65.8	0.3	5.7		6	27.7	0.5		28.2	3.5	96.5	

	La Sierra Avenue Southbound			McAllister Parkway Westbound			La Sierra Avenue Northbound			
Start Time	Left	Thru	App. Total	Left	Right	App. Total	Thru	Right	App. Total	Int. Total
Peak Hour Analysis From 04:00 PM to 05:45 PM - Peak 1 of 1										
Peak Hour for Entire Intersection Begins at 04:45 PM										
04:45 PM	**74**	340	414	2	32	34	**190**	0	**190**	638
05:00 PM	61	401	462	2	35	37	162	**5**	167	666
05:15 PM	67	**406**	**473**	**3**	41	**44**	174	2	176	**693**
05:30 PM	69	340	409	1	**42**	43	180	5	185	637
Total Volume	271	1487	1758	8	150	158	706	12	718	2634
% App. Total	15.4	84.6		5.1	94.9		98.3	1.7		
PHF	.916	.916	.929	.667	.893	.898	.929	.600	.945	.950

Counts Unlimited, Inc.
PO Box 1178
Corona, CA 92878
(951) 268-6268

City of Riverside
N/S: La Sierra Avenue
E/W: McAllister Parkway
Weather: Clear

File Name : 05_RIV_LS_McA PM
Site Code : 05124383
Start Date : 4/25/2024
Page No : 2

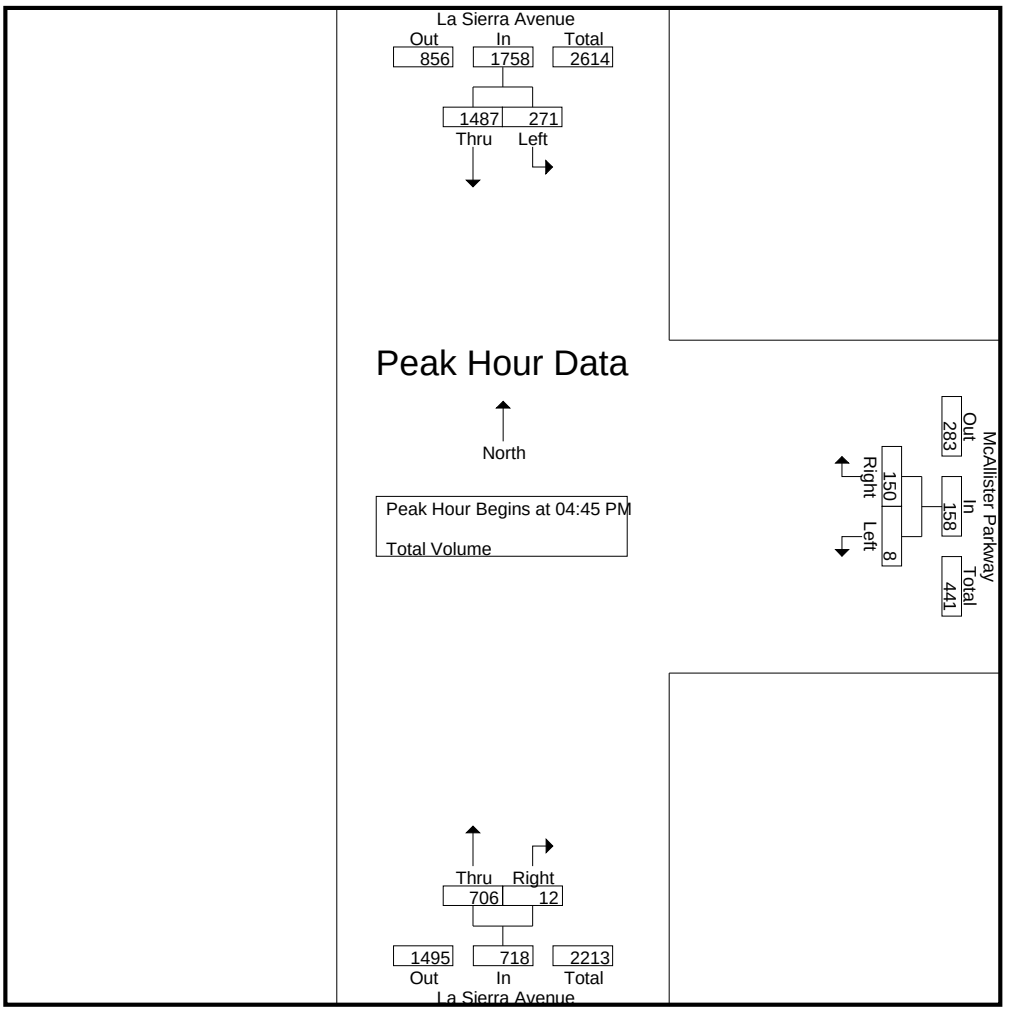

Peak Hour Analysis From 04:00 PM to 05:45 PM - Peak 1 of 1
Peak Hour for Each Approach Begins at:

	04:45 PM			05:00 PM			04:00 PM		
+0 mins.	**74**	340	414	2	35	37	**210**	**4**	**214**
+15 mins.	61	401	462	**3**	41	**44**	200	2	202
+30 mins.	67	**406**	**473**	1	**42**	43	183	3	186
+45 mins.	69	340	409	3	39	42	190	0	190
Total Volume	271	1487	1758	9	157	166	783	9	792
% App. Total	15.4	84.6		5.4	94.6		98.9	1.1	
PHF	.916	.916	.929	.750	.935	.943	.932	.563	.925

Location: Riverside
N/S: La Sierra Avenue
E/W: McAllister Parkway

Date: 4/25/2024
Day: Thursday

PEDESTRIANS

	North Leg La Sierra Avenue	East Leg McAllister Parkway	South Leg La Sierra Avenue	West Leg McAllister Parkway	
	Pedestrians	Pedestrians	Pedestrians	Pedestrians	
7:00 AM	0	0	0	0	0
7:15 AM	0	0	0	0	0
7:30 AM	0	0	0	0	0
7:45 AM	0	0	0	0	0
8:00 AM	0	0	0	0	0
8:15 AM	0	0	0	0	0
8:30 AM	0	0	0	0	0
8:45 AM	0	0	0	0	0
TOTAL VOLUMES:	0	0	0	0	0

	North Leg La Sierra Avenue	East Leg McAllister Parkway	South Leg La Sierra Avenue	West Leg McAllister Parkway	
	Pedestrians	Pedestrians	Pedestrians	Pedestrians	
4:00 PM	0	0	0	0	0
4:15 PM	0	0	0	0	0
4:30 PM	0	0	0	0	0
4:45 PM	0	0	0	0	0
5:00 PM	0	0	0	0	0
5:15 PM	0	0	0	0	0
5:30 PM	0	0	0	0	0
5:45 PM	0	0	0	0	0
TOTAL VOLUMES:	0	0	0	0	0

Counts Unlimited, Inc.
PO Box 1178
Corona, CA 92878
951-268-6268

Location: Riverside
N/S: La Sierra Avenue
E/W: McAllister Parkway

Date: 4/25/2024
Day: Thursday

BICYCLES

	Southbound La Sierra Avenue			Westbound McAllister Parkway			Northbound La Sierra Avenue			Eastbound McAllister Parkway			
	Left	Thru	Right	Left	Thru	Right	Left	Thru	Right	Left	Thru	Right	
7:00 AM	0	0	0	0	0	0	0	0	0	0	0	0	0
7:15 AM	0	0	0	0	0	0	0	0	0	0	0	0	0
7:30 AM	0	0	0	0	0	0	0	0	0	0	0	0	0
7:45 AM	0	0	0	0	0	0	0	0	0	0	0	0	0
8:00 AM	0	0	0	0	0	0	0	0	0	0	0	0	0
8:15 AM	0	0	0	0	0	0	0	0	0	0	0	0	0
8:30 AM	0	0	0	0	0	0	0	0	0	0	0	0	0
8:45 AM	0	0	0	0	0	1	0	0	0	0	0	0	1
TOTAL VOLUMES:	0	0	0	0	0	1	0	0	0	0	0	0	1

	Southbound La Sierra Avenue			Westbound McAllister Parkway			Northbound La Sierra Avenue			Eastbound McAllister Parkway			
	Left	Thru	Right	Left	Thru	Right	Left	Thru	Right	Left	Thru	Right	
4:00 PM	0	0	0	0	0	0	0	0	0	0	0	0	0
4:15 PM	0	0	0	1	0	0	0	0	0	0	0	0	1
4:30 PM	0	0	0	0	0	0	0	0	0	0	0	0	0
4:45 PM	0	1	0	0	0	0	0	0	0	0	0	0	1
5:00 PM	0	0	0	0	0	0	0	0	1	0	0	0	1
5:15 PM	0	0	0	0	0	0	0	0	0	0	0	0	0
5:30 PM	1	0	0	0	0	0	0	0	0	0	0	0	1
5:45 PM	0	0	0	0	0	0	0	0	0	0	0	0	0
TOTAL VOLUMES:	1	1	0	1	0	0	0	0	1	0	0	0	4

Counts Unlimited, Inc.
PO Box 1178
Corona, CA 92878
(951) 268-6268

City of Riverside
N/S: La Sierra Avenue
E/W: El Sobrante Road
Weather: Clear

File Name : 06_RIV_LS_ElS AM
Site Code : 05124383
Start Date : 4/25/2024
Page No : 1

Groups Printed- Total Volume

	La Sierra Avenue Southbound			El Sobrante Road Westbound			La Sierra Avenue Northbound			
Start Time	Left	Thru	App. Total	Left	Right	App. Total	Thru	Right	App. Total	Int. Total
07:00 AM	48	26	74	14	107	121	25	4	29	224
07:15 AM	45	31	76	24	124	148	28	3	31	255
07:30 AM	51	36	87	14	105	119	32	4	36	242
07:45 AM	55	28	83	18	112	130	22	6	28	241
Total	199	121	320	70	448	518	107	17	124	962
08:00 AM	58	30	88	12	123	135	25	6	31	254
08:15 AM	63	33	96	14	115	129	29	4	33	258
08:30 AM	61	25	86	9	97	106	36	8	44	236
08:45 AM	39	20	59	8	130	138	30	7	37	234
Total	221	108	329	43	465	508	120	25	145	982
Grand Total	420	229	649	113	913	1026	227	42	269	1944
Apprch %	64.7	35.3		11	89		84.4	15.6		
Total %	21.6	11.8	33.4	5.8	47	52.8	11.7	2.2	13.8	

	La Sierra Avenue Southbound			El Sobrante Road Westbound			La Sierra Avenue Northbound			
Start Time	Left	Thru	App. Total	Left	Right	App. Total	Thru	Right	App. Total	Int. Total
Peak Hour Analysis From 07:00 AM to 08:45 AM - Peak 1 of 1										
Peak Hour for Entire Intersection Begins at 07:30 AM										
07:30 AM	51	**36**	87	14	105	119	**32**	4	**36**	242
07:45 AM	55	28	83	**18**	112	130	22	**6**	28	241
08:00 AM	58	30	88	12	**123**	**135**	25	6	31	254
08:15 AM	**63**	33	**96**	14	115	129	29	4	33	**258**
Total Volume	227	127	354	58	455	513	108	20	128	995
% App. Total	64.1	35.9		11.3	88.7		84.4	15.6		
PHF	.901	.882	.922	.806	.925	.950	.844	.833	.889	.964

Counts Unlimited, Inc.
PO Box 1178
Corona, CA 92878
(951) 268-6268

City of Riverside
N/S: La Sierra Avenue
E/W: El Sobrante Road
Weather: Clear

File Name : 06_RIV_LS_ElS AM
Site Code : 05124383
Start Date : 4/25/2024
Page No : 2

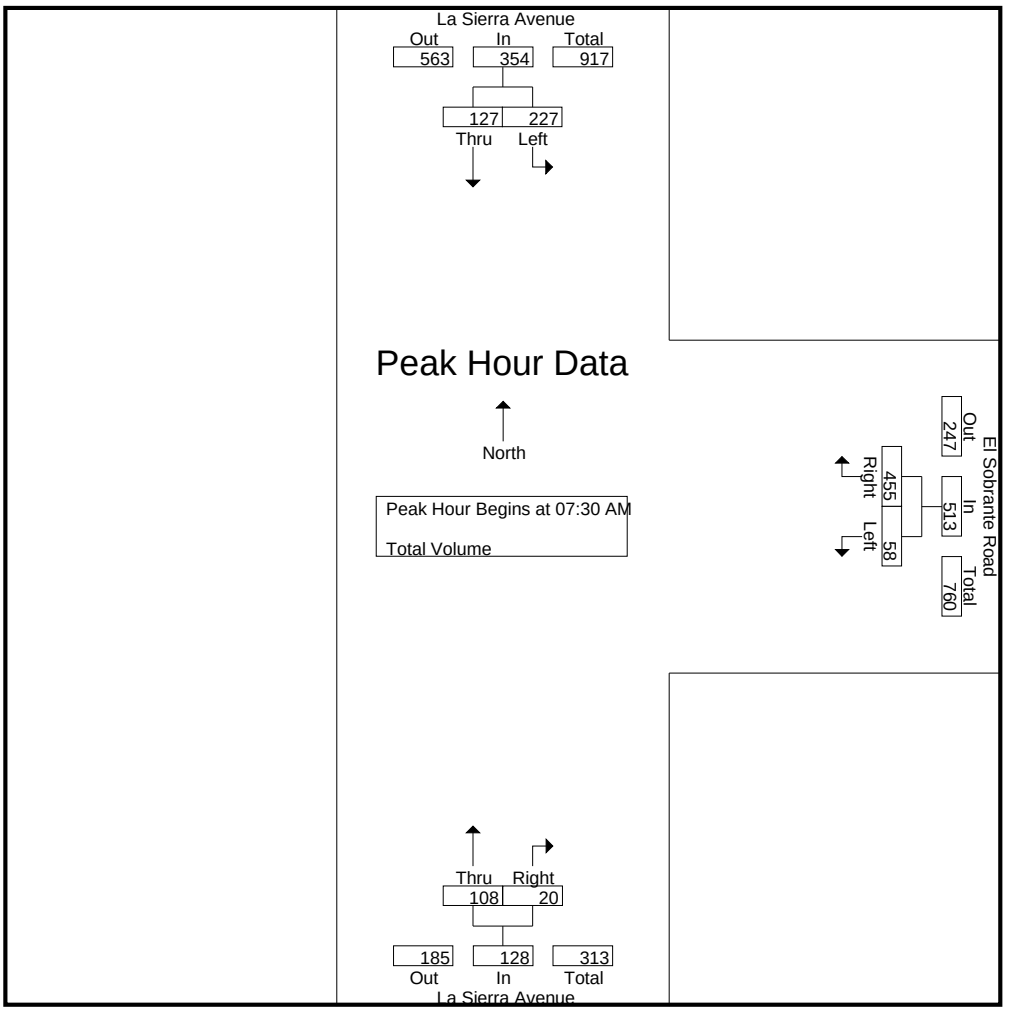

Peak Hour Analysis From 07:00 AM to 08:45 AM - Peak 1 of 1
Peak Hour for Each Approach Begins at:

	07:30 AM			07:15 AM			08:00 AM		
+0 mins.	51	**36**	87	**24**	**124**	**148**	25	6	31
+15 mins.	55	28	83	14	105	119	29	4	33
+30 mins.	58	30	88	18	112	130	**36**	**8**	**44**
+45 mins.	**63**	33	**96**	12	123	135	30	7	37
Total Volume	227	127	354	68	464	532	120	25	145
% App. Total	64.1	35.9		12.8	87.2		82.8	17.2	
PHF	.901	.882	.922	.708	.935	.899	.833	.781	.824

Counts Unlimited, Inc.
PO Box 1178
Corona, CA 92878
(951) 268-6268

City of Riverside
N/S: La Sierra Avenue
E/W: El Sobrante Road
Weather: Clear

File Name : 06_RIV_LS_ElS PM
Site Code : 05124383
Start Date : 4/25/2024
Page No : 1

Groups Printed- Total Volume

	La Sierra Avenue Southbound			El Sobrante Road Westbound			La Sierra Avenue Northbound			
Start Time	Left	Thru	App. Total	Left	Right	App. Total	Thru	Right	App. Total	Int. Total
04:00 PM	126	114	240	20	88	108	62	22	84	432
04:15 PM	146	112	258	19	90	109	60	23	83	450
04:30 PM	142	114	256	18	65	83	65	18	83	422
04:45 PM	145	110	255	23	79	102	68	15	83	440
Total	559	450	1009	80	322	402	255	78	333	1744
05:00 PM	158	122	280	17	68	85	45	26	71	436
05:15 PM	171	128	299	14	91	105	43	24	67	471
05:30 PM	145	102	247	19	71	90	43	25	68	405
05:45 PM	146	100	246	9	52	61	32	16	48	355
Total	620	452	1072	59	282	341	163	91	254	1667
Grand Total	1179	902	2081	139	604	743	418	169	587	3411
Apprch %	56.7	43.3		18.7	81.3		71.2	28.8		
Total %	34.6	26.4	61	4.1	17.7	21.8	12.3	5	17.2	

	La Sierra Avenue Southbound			El Sobrante Road Westbound			La Sierra Avenue Northbound			
Start Time	Left	Thru	App. Total	Left	Right	App. Total	Thru	Right	App. Total	Int. Total
Peak Hour Analysis From 04:00 PM to 05:45 PM - Peak 1 of 1										
Peak Hour for Entire Intersection Begins at 04:30 PM										
04:30 PM	142	114	256	18	65	83	65	18	**83**	422
04:45 PM	145	110	255	**23**	79	102	**68**	15	83	440
05:00 PM	158	122	280	17	68	85	45	**26**	71	436
05:15 PM	**171**	**128**	**299**	14	**91**	**105**	43	24	67	**471**
Total Volume	616	474	1090	72	303	375	221	83	304	1769
% App. Total	56.5	43.5		19.2	80.8		72.7	27.3		
PHF	.901	.926	.911	.783	.832	.893	.813	.798	.916	.939

Counts Unlimited, Inc.
PO Box 1178
Corona, CA 92878
(951) 268-6268

City of Riverside
N/S: La Sierra Avenue
E/W: El Sobrante Road
Weather: Clear

File Name : 06_RIV_LS_ElS PM
Site Code : 05124383
Start Date : 4/25/2024
Page No : 2

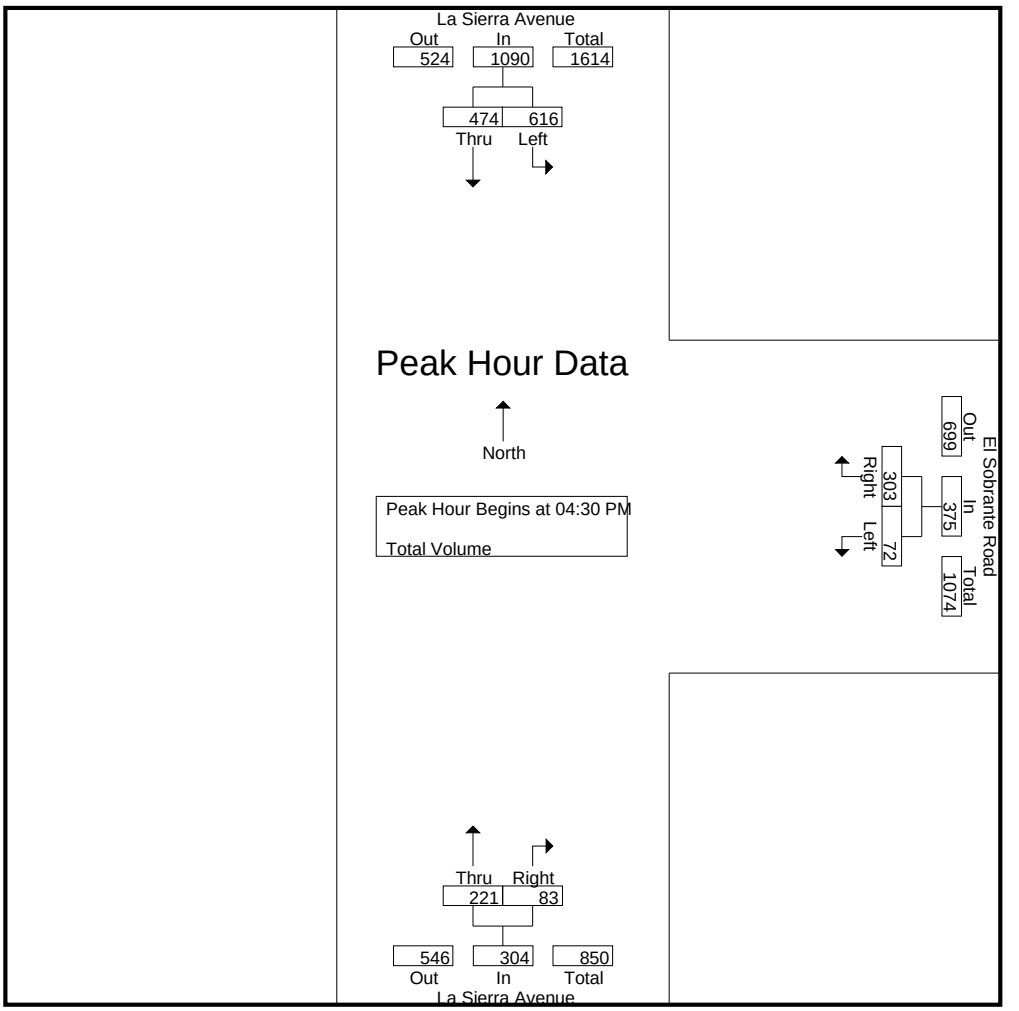

Peak Hour Analysis From 04:00 PM to 05:45 PM - Peak 1 of 1
Peak Hour for Each Approach Begins at:

	04:30 PM			04:00 PM			04:00 PM		
+0 mins.	142	114	256	20	88	108	62	22	**84**
+15 mins.	145	110	255	19	**90**	**109**	60	**23**	83
+30 mins.	158	122	280	18	65	83	65	18	83
+45 mins.	**171**	**128**	**299**	**23**	79	102	**68**	15	83
Total Volume	616	474	1090	80	322	402	255	78	333
% App. Total	56.5	43.5		19.9	80.1		76.6	23.4	
PHF	.901	.926	.911	.870	.894	.922	.938	.848	.991

Location: Riverside
N/S: La Sierra Avenue
E/W: El Sobrante Road

Date: 4/25/2024
Day: Thursday

PEDESTRIANS

	North Leg La Sierra Avenue	East Leg El Sobrante Road	South Leg La Sierra Avenue	West Leg El Sobrante Road	
	Pedestrians	Pedestrians	Pedestrians	Pedestrians	
7:00 AM	0	0	0	0	0
7:15 AM	0	0	0	0	0
7:30 AM	0	0	0	0	0
7:45 AM	0	0	0	0	0
8:00 AM	0	0	0	0	0
8:15 AM	0	0	0	0	0
8:30 AM	0	0	0	0	0
8:45 AM	0	0	0	0	0
TOTAL VOLUMES:	0	0	0	0	0

	North Leg La Sierra Avenue	East Leg El Sobrante Road	South Leg La Sierra Avenue	West Leg El Sobrante Road	
	Pedestrians	Pedestrians	Pedestrians	Pedestrians	
4:00 PM	0	0	0	0	0
4:15 PM	0	0	0	0	0
4:30 PM	0	0	0	0	0
4:45 PM	0	0	0	0	0
5:00 PM	0	0	0	0	0
5:15 PM	0	0	0	0	0
5:30 PM	0	0	0	0	0
5:45 PM	0	0	0	0	0
TOTAL VOLUMES:	0	0	0	0	0

Counts Unlimited, Inc.
PO Box 1178
Corona, CA 92878
951-268-6268

Location: Riverside
N/S: La Sierra Avenue
E/W: El Sobrante Road

Date: 4/25/2024
Day: Thursday

BICYCLES

	Southbound La Sierra Avenue			Westbound El Sobrante Road			Northbound La Sierra Avenue			Eastbound El Sobrante Road			
	Left	Thru	Right	Left	Thru	Right	Left	Thru	Right	Left	Thru	Right	
7:00 AM	0	0	0	0	0	0	0	0	0	0	0	0	0
7:15 AM	0	0	0	0	0	0	0	0	0	0	0	0	0
7:30 AM	0	0	0	0	0	0	0	0	0	0	0	0	0
7:45 AM	0	0	0	0	0	0	0	0	0	0	0	0	0
8:00 AM	0	0	0	0	0	0	0	0	0	0	0	0	0
8:15 AM	0	0	0	0	0	0	0	0	0	0	0	0	0
8:30 AM	0	0	0	0	0	0	0	0	0	0	0	0	0
8:45 AM	0	0	0	0	0	0	0	0	0	0	0	0	0
TOTAL VOLUMES:	0	0	0	0	0	0	0	0	0	0	0	0	0

	Southbound La Sierra Avenue			Westbound El Sobrante Road			Northbound La Sierra Avenue			Eastbound El Sobrante Road			
	Left	Thru	Right	Left	Thru	Right	Left	Thru	Right	Left	Thru	Right	
4:00 PM	0	0	0	0	0	0	0	0	0	0	0	0	0
4:15 PM	0	0	0	0	0	0	0	0	0	0	0	0	0
4:30 PM	0	0	0	0	0	0	0	0	0	0	0	0	0
4:45 PM	0	0	0	0	0	0	0	0	0	0	0	0	0
5:00 PM	0	0	0	0	0	0	0	0	0	0	0	0	0
5:15 PM	0	0	0	0	0	0	0	0	0	0	0	0	0
5:30 PM	0	0	0	0	0	0	0	0	0	0	0	0	0
5:45 PM	0	0	0	0	0	0	0	0	0	0	0	0	0
TOTAL VOLUMES:	0	0	0	0	0	0	0	0	0	0	0	0	0

Counts Unlimited, Inc.
PO Box 1178
Corona, CA 92878
(951) 268-6268

City of Riverside
N/S: McAllister Street
E/W: El Sobrante Road
Weather: Clear

File Name : 07_RIV_McA_ElS AM
Site Code : 05124383
Start Date : 4/25/2024
Page No : 1

Groups Printed- Total Volume

	McAllister Street Southbound				El Sobrante Road Westbound				El Sobrante Road Eastbound					
Start Time	Left	Right	RTOR	App. Total	Thru	Right	RTOR	App. Total	Left	Thru	App. Total	Exclu. Total	Inclu. Total	Int. Total
07:00 AM	10	22	9	32	104	13	1	117	9	47	56	10	205	215
07:15 AM	2	34	11	36	106	8	0	114	10	42	52	11	202	213
07:30 AM	5	17	6	22	114	13	1	127	13	45	58	7	207	214
07:45 AM	13	14	4	27	106	28	5	134	9	61	70	9	231	240
Total	30	87	30	117	430	62	7	492	41	195	236	37	845	882
08:00 AM	16	19	3	35	103	32	4	135	15	51	66	7	236	243
08:15 AM	13	20	5	33	116	15	0	131	12	60	72	5	236	241
08:30 AM	3	17	4	20	95	8	1	103	15	55	70	5	193	198
08:45 AM	5	14	3	19	110	11	0	121	8	41	49	3	189	192
Total	37	70	15	107	424	66	5	490	50	207	257	20	854	874
Grand Total	67	157	45	224	854	128	12	982	91	402	493	57	1699	1756
Apprch %	29.9	70.1			87	13			18.5	81.5				
Total %	3.9	9.2		13.2	50.3	7.5		57.8	5.4	23.7	29	3.2	96.8	

	McAllister Street Southbound			El Sobrante Road Westbound			El Sobrante Road Eastbound			
Start Time	Left	Right	App. Total	Thru	Right	App. Total	Left	Thru	App. Total	Int. Total
Peak Hour Analysis From 07:00 AM to 08:45 AM - Peak 1 of 1										
Peak Hour for Entire Intersection Begins at 07:30 AM										
07:30 AM	5	17	22	114	13	127	13	45	58	207
07:45 AM	13	14	27	106	28	134	9	**61**	70	231
08:00 AM	**16**	19	**35**	103	**32**	**135**	**15**	51	66	**236**
08:15 AM	13	**20**	33	**116**	15	131	12	60	**72**	236
Total Volume	47	70	117	439	88	527	49	217	266	910
% App. Total	40.2	59.8		83.3	16.7		18.4	81.6		
PHF	.734	.875	.836	.946	.688	.976	.817	.889	.924	.964

Counts Unlimited, Inc.
PO Box 1178
Corona, CA 92878
(951) 268-6268

City of Riverside
N/S: McAllister Street
E/W: El Sobrante Road
Weather: Clear

File Name : 07_RIV_McA_EIS AM
Site Code : 05124383
Start Date : 4/25/2024
Page No : 2

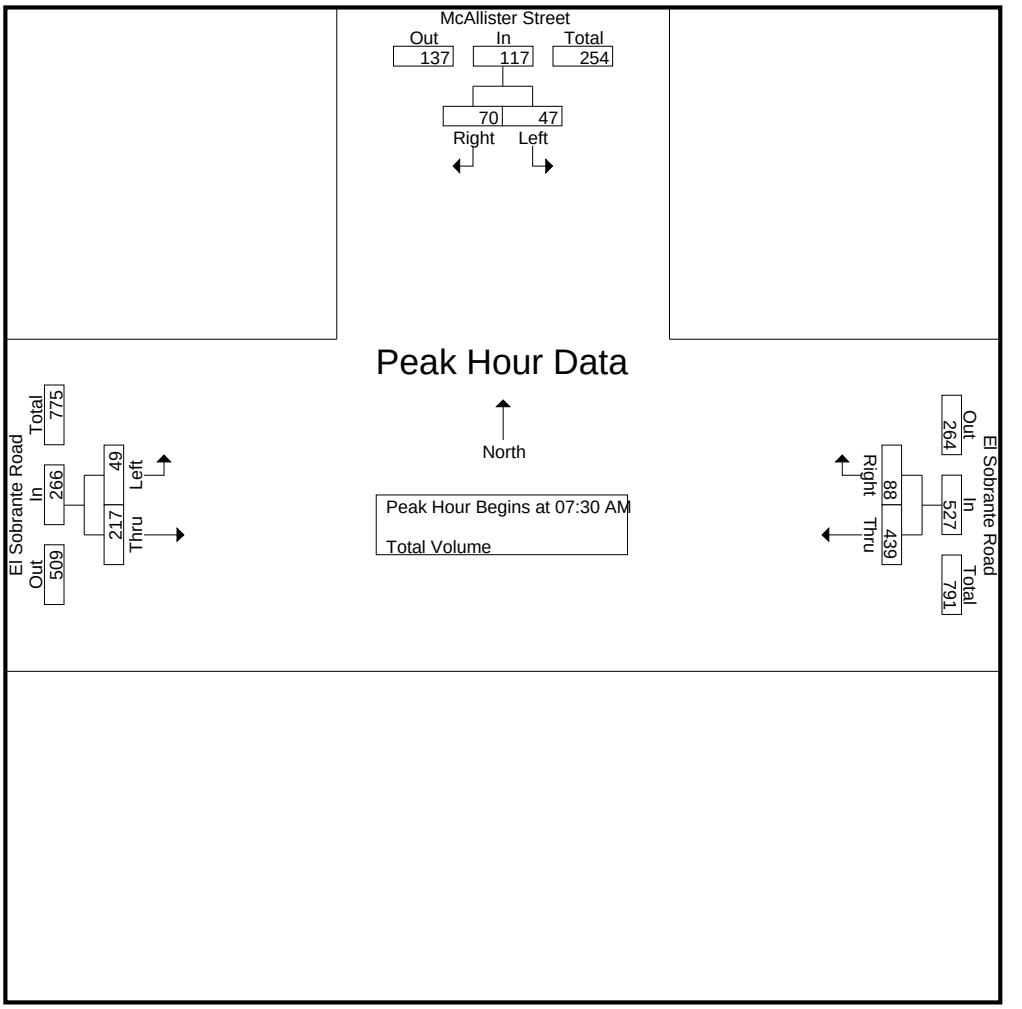

Peak Hour Analysis From 07:00 AM to 08:45 AM - Peak 1 of 1
Peak Hour for Each Approach Begins at:

	07:15 AM			07:30 AM			07:45 AM		
+0 mins.	2	**34**	**36**	114	13	127	9	**61**	70
+15 mins.	5	17	22	106	28	134	**15**	51	66
+30 mins.	13	14	27	103	**32**	**135**	12	60	**72**
+45 mins.	**16**	19	35	**116**	15	131	15	55	70
Total Volume	36	84	120	439	88	527	51	227	278
% App. Total	30	70		83.3	16.7		18.3	81.7	
PHF	.563	.618	.833	.946	.688	.976	.850	.930	.965

Counts Unlimited, Inc.
PO Box 1178
Corona, CA 92878
(951) 268-6268

City of Riverside
N/S: McAllister Street
E/W: El Sobrante Road
Weather: Clear

File Name : 07_RIV_McA_EIS PM
Site Code : 05124383
Start Date : 4/25/2024
Page No : 1

Groups Printed- Total Volume

	McAllister Street Southbound				El Sobrante Road Westbound				El Sobrante Road Eastbound					
Start Time	Left	Right	RTOR	App. Total	Thru	Right	RTOR	App. Total	Left	Thru	App. Total	Exclu. Total	Inclu. Total	Int. Total
04:00 PM	9	35	10	44	93	10	2	103	15	125	140	12	287	299
04:15 PM	5	19	4	24	75	5	1	80	20	144	164	5	268	273
04:30 PM	9	20	5	29	61	8	0	69	19	144	163	5	261	266
04:45 PM	9	27	5	36	71	10	3	81	11	143	154	8	271	279
Total	32	101	24	133	300	33	6	333	65	556	621	30	1087	1117
05:00 PM	9	35	10	44	67	4	0	71	20	159	179	10	294	304
05:15 PM	9	22	6	31	83	8	1	91	12	173	185	7	307	314
05:30 PM	5	21	2	26	62	6	0	68	17	165	182	2	276	278
05:45 PM	5	16	5	21	55	3	0	58	14	141	155	5	234	239
Total	28	94	23	122	267	21	1	288	63	638	701	24	1111	1135
Grand Total	60	195	47	255	567	54	7	621	128	1194	1322	54	2198	2252
Apprch %	23.5	76.5			91.3	8.7			9.7	90.3				
Total %	2.7	8.9		11.6	25.8	2.5		28.3	5.8	54.3	60.1	2.4	97.6	

	McAllister Street Southbound			El Sobrante Road Westbound			El Sobrante Road Eastbound			
Start Time	Left	Right	App. Total	Thru	Right	App. Total	Left	Thru	App. Total	Int. Total
Peak Hour Analysis From 04:00 PM to 05:45 PM - Peak 1 of 1										
Peak Hour for Entire Intersection Begins at 04:45 PM										
04:45 PM	**9**	27	36	71	**10**	81	11	143	154	271
05:00 PM	9	**35**	**44**	67	4	71	**20**	159	179	294
05:15 PM	9	22	31	**83**	8	**91**	12	**173**	**185**	**307**
05:30 PM	5	21	26	62	6	68	17	165	182	276
Total Volume	32	105	137	283	28	311	60	640	700	1148
% App. Total	23.4	76.6		91	9		8.6	91.4		
PHF	.889	.750	.778	.852	.700	.854	.750	.925	.946	.935

Counts Unlimited, Inc.
PO Box 1178
Corona, CA 92878
(951) 268-6268

City of Riverside
N/S: McAllister Street
E/W: El Sobrante Road
Weather: Clear

File Name : 07_RIV_McA_EIS PM
Site Code : 05124383
Start Date : 4/25/2024
Page No : 2

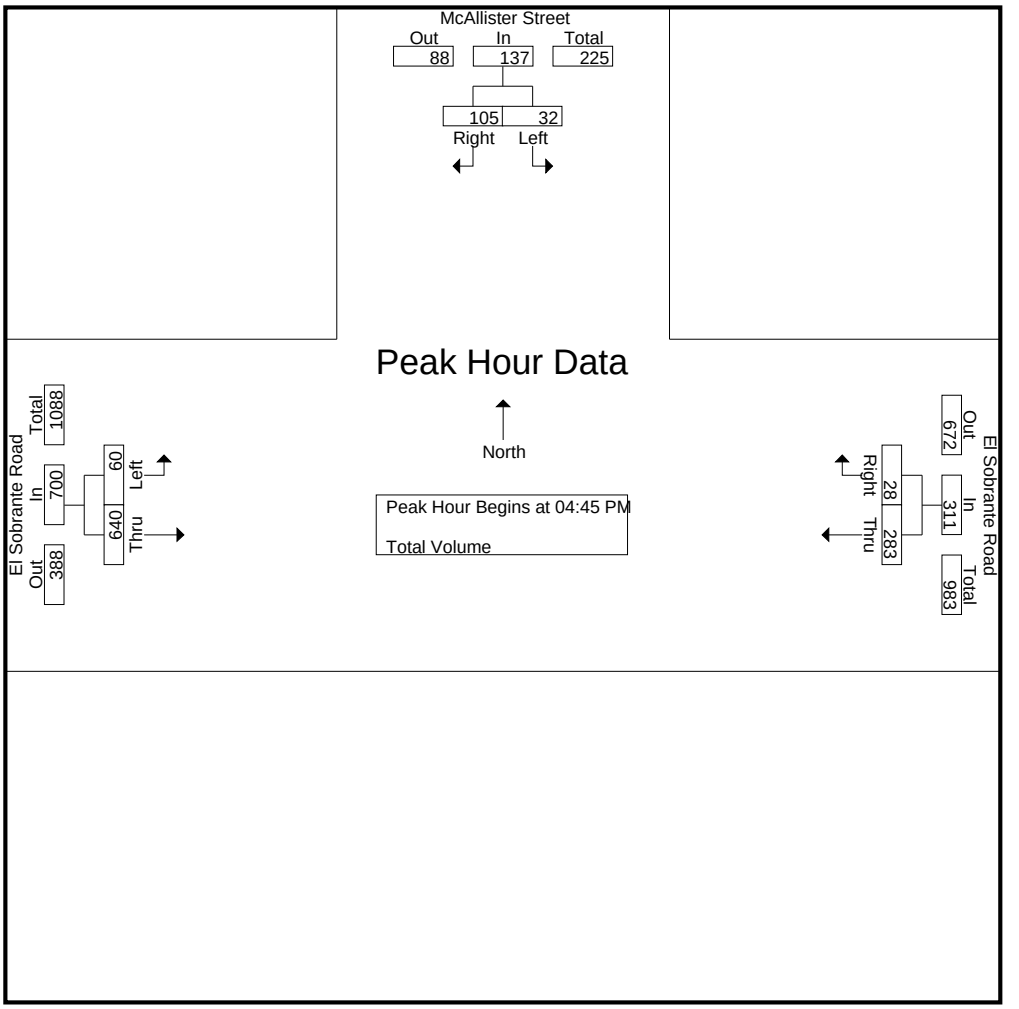

Peak Hour Analysis From 04:00 PM to 05:45 PM - Peak 1 of 1
Peak Hour for Each Approach Begins at:

	04:30 PM			04:00 PM			05:00 PM		
+0 mins.	**9**	20	29	**93**	**10**	**103**	**20**	159	179
+15 mins.	9	27	36	75	5	80	12	**173**	**185**
+30 mins.	9	**35**	**44**	61	8	69	17	165	182
+45 mins.	9	22	31	71	10	81	14	141	155
Total Volume	36	104	140	300	33	333	63	638	701
% App. Total	25.7	74.3		90.1	9.9		9	91	
PHF	1.000	.743	.795	.806	.825	.808	.788	.922	.947

Location: Riverside
N/S: McAllister Street
E/W: El Sobrante Road

Date: 4/25/2024
Day: Thursday

PEDESTRIANS

	North Leg McAllister Street	East Leg El Sobrante Road	South Leg Dead End	West Leg El Sobrante Road	
	Pedestrians	Pedestrians	Pedestrians	Pedestrians	
7:00 AM	0	0	0	0	0
7:15 AM	0	0	0	0	0
7:30 AM	0	0	0	0	0
7:45 AM	0	0	0	0	0
8:00 AM	0	0	0	0	0
8:15 AM	0	0	0	0	0
8:30 AM	0	0	0	0	0
8:45 AM	0	0	0	0	0
TOTAL VOLUMES:	0	0	0	0	0

	North Leg McAllister Street	East Leg El Sobrante Road	South Leg Dead End	West Leg El Sobrante Road	
	Pedestrians	Pedestrians	Pedestrians	Pedestrians	
4:00 PM	0	0	0	0	0
4:15 PM	0	0	0	0	0
4:30 PM	0	0	0	0	0
4:45 PM	0	0	0	0	0
5:00 PM	0	0	0	0	0
5:15 PM	0	0	0	0	0
5:30 PM	0	0	0	0	0
5:45 PM	0	0	0	0	0
TOTAL VOLUMES:	0	0	0	0	0

Counts Unlimited, Inc.
PO Box 1178
Corona, CA 92878
951-268-6268

Location: Riverside
N/S: McAllister Street
E/W: El Sobrante Road

Date: 4/25/2024
Day: Thursday

BICYCLES

	Southbound McAllister Street			Westbound El Sobrante Road			Northbound Dead End			Eastbound El Sobrante Road			
	Left	Thru	Right	Left	Thru	Right	Left	Thru	Right	Left	Thru	Right	
7:00 AM	0	0	0	0	0	0	0	0	0	0	0	0	0
7:15 AM	0	0	0	0	0	0	0	0	0	0	0	0	0
7:30 AM	0	0	0	0	0	0	0	0	0	0	0	0	0
7:45 AM	0	0	0	0	0	0	0	0	0	0	0	0	0
8:00 AM	0	0	0	0	0	0	0	0	0	0	0	0	0
8:15 AM	0	0	0	0	0	0	0	0	0	0	0	0	0
8:30 AM	0	0	0	0	0	0	0	0	0	0	0	0	0
8:45 AM	0	0	0	0	0	0	0	0	0	0	0	0	0
TOTAL VOLUMES:	0	0	0	0	0	0	0	0	0	0	0	0	0

	Southbound McAllister Street			Westbound El Sobrante Road			Northbound Dead End			Eastbound El Sobrante Road			
	Left	Thru	Right	Left	Thru	Right	Left	Thru	Right	Left	Thru	Right	
4:00 PM	0	0	0	0	0	0	0	0	0	0	0	0	0
4:15 PM	0	0	0	0	0	0	0	0	0	0	0	0	0
4:30 PM	0	0	0	0	0	0	0	0	0	0	0	0	0
4:45 PM	0	0	0	0	0	0	0	0	0	0	0	0	0
5:00 PM	0	0	0	0	0	0	0	0	0	0	0	0	0
5:15 PM	0	0	0	0	0	0	0	0	0	0	0	0	0
5:30 PM	0	0	0	0	0	0	0	0	0	0	0	0	0
5:45 PM	0	0	0	0	0	0	0	0	0	0	0	0	0
TOTAL VOLUMES:	0	0	0	0	0	0	0	0	0	0	0	0	0

Counts Unlimited, Inc.
PO Box 1178
Corona, CA 92878
951-268-6268

Counts Unlimited, Inc.

PO Box 1178
Corona, CA 92878
Phone: (951) 268-6268
email: counts@countsunlimited.com

County of Riverside
El Sobrante Road
E/ McAllister Street
24 Hour Directional Volume Count

CRV005
Site Code: 051-24383

Start	4/25/2024	Eastbound		Hour Totals		Westbound		Hour Totals		Combined Totals	
Time	Thu	Morning	Afternoon	Morning	Afternoon	Morning	Afternoon	Morning	Afternoon	Morning	Afternoon
12:00		19	64			2	67				
12:15		15	70			2	47				
12:30		9	82			3	89				
12:45		5	76	48	292	4	86	11	289	59	581
01:00		10	76			4	71				
01:15		13	68			3	62				
01:30		9	88			3	87				
01:45		5	102	37	334	6	94	16	314	53	648
02:00		5	84			6	82				
02:15		6	94			9	79				
02:30		10	131			7	71				
02:45		6	142	27	451	1	**121**	23	353	50	804
03:00		4	137			15	**101**				
03:15		5	142			27	**98**				
03:30		5	127			25	**97**				
03:45		7	132	21	538	46	94	113	390	134	928
04:00		6	134			64	101				
04:15		8	149			79	79				
04:30		10	153			103	69				
04:45		11	**152**	35	588	86	78	332	327	367	915
05:00		17	**168**			91	71				
05:15		31	**182**			73	90				
05:30		41	**170**			106	68				
05:45		35	146	124	666	77	58	347	287	471	953
06:00		44	122			76	61				
06:15		65	139			103	51				
06:30		54	133			87	43				
06:45		47	126	210	520	93	38	359	193	569	713
07:00		57	97			116	47				
07:15		44	86			114	37				
07:30		50	84			**126**	32				
07:45		**74**	70	225	337	**129**	28	485	144	710	481
08:00		**67**	61			**131**	28				
08:15		**73**	66			**132**	28				
08:30		**58**	54			102	28				
08:45		46	66	244	247	121	24	486	108	730	355
09:00		41	54			99	23				
09:15		41	54			90	23				
09:30		42	54			91	20				
09:45		44	45	168	207	106	21	386	87	554	294
10:00		43	40			82	29				
10:15		49	31			78	17				
10:30		53	25			78	11				
10:45		47	30	192	126	80	7	318	64	510	190
11:00		49	25			72	6				
11:15		51	27			60	11				
11:30		47	15			72	7				
11:45		73	20	220	87	57	6	261	30	481	117
Total		1551	4393	1551	4393	3137	2586	3137	2586	4688	6979
Combined Total		5944		5944		5723		5723		11667	
AM Peak	-	07:45	-	-	-	07:30	-	-	-	-	-
Vol.	-	272	-	-	-	518	-	-	-	-	-
P.H.F.		0.919				0.981					
PM Peak	-	-	04:45	-	-	-	02:45	-	-	-	-
Vol.	-	-	672	-	-	-	417	-	-	-	-
P.H.F.			0.923				0.862				
Percentage		26.1%	73.9%			54.8%	45.2%				
ADT/AADT		ADT 11,667		AADT 11,667							

Counts Unlimited, Inc.

PO Box 1178
Corona, CA 92878
Phone: (951) 268-6268
email: counts@countsunlimited.com

County of Riverside
La Sierra Avenue
N/ El Sobrante Road
24 Hour Directional Volume Count

CRV003
Site Code: 051-24383

Start Time	4/25/2024 Thu	Northbound Morning	Northbound Afternoon	Hour Totals Morning	Hour Totals Afternoon	Southbound Morning	Southbound Afternoon	Hour Totals Morning	Hour Totals Afternoon	Combined Totals Morning	Combined Totals Afternoon
12:00		8	99			23	106				
12:15		3	74			16	81				
12:30		9	106			2	116				
12:45		6	101	26	380	8	96	49	399	75	779
01:00		4	85			10	100				
01:15		3	83			24	98				
01:30		6	124			9	108				
01:45		8	113	21	405	4	153	47	459	68	864
02:00		6	109			6	121				
02:15		8	132			7	128				
02:30		11	129			12	170				
02:45		13	**171**	38	541	6	166	31	585	69	1126
03:00		16	**133**			5	192				
03:15		27	**162**			7	250				
03:30		24	**162**			8	221				
03:45		44	145	111	602	7	213	27	876	138	1478
04:00		67	150			8	240				
04:15		83	150			18	258				
04:30		99	130			15	**256**				
04:45		100	147	349	577	13	**255**	54	1009	403	1586
05:00		92	113			29	**280**				
05:15		86	134			50	**299**				
05:30		103	114			66	248				
05:45		81	84	362	445	76	246	221	1073	583	1518
06:00		85	92			85	181				
06:15		94	87			73	218				
06:30		97	84			94	166				
06:45		107	79	383	342	79	138	331	703	714	1045
07:00		132	62			74	112				
07:15		152	69			76	112				
07:30		137	53			**87**	103				
07:45		134	43	555	227	**83**	90	320	417	875	644
08:00		**148**	43			**88**	65				
08:15		**144**	39			**96**	81				
08:30		**133**	47			86	72				
08:45		**160**	37	585	166	59	74	329	292	914	458
09:00		117	35			92	64				
09:15		128	30			60	61				
09:30		111	37			59	70				
09:45		130	30	486	132	72	56	283	251	769	383
10:00		88	31			60	45				
10:15		84	30			72	38				
10:30		114	15			80	35				
10:45		102	24	388	100	65	31	277	149	665	249
11:00		85	9			83	29				
11:15		80	17			81	32				
11:30		92	7			76	21				
11:45		72	9	329	42	87	23	327	105	656	147
Total		3633	3959	3633	3959	2296	6318	2296	6318	5929	10277
Combined Total		7592		7592		8614		8614		16206	
AM Peak	-	08:00	-	-	-	07:30	-	-	-	-	-
Vol.	-	585	-	-	-	354	-	-	-	-	-
P.H.F.		0.914				0.922					
PM Peak	-	-	02:45	-	-	-	04:30	-	-	-	-
Vol.	-	-	628	-	-	-	1090	-	-	-	-
P.H.F.			0.918				0.911				
Percentage		47.9%	52.1%			26.7%	73.3%				
ADT/AADT		ADT 16,206		AADT 16,206							

Counts Unlimited, Inc.

PO Box 1178
Corona, CA 92878
Phone: (951) 268-6268
email: counts@countsunlimited.com

County of Riverside
McAllister Street
N/ El Sobrante Road
24 Hour Directional Volume Count

CRV004
Site Code: 051-24383

Start Time	4/25/2024 Thu	Northbound Morning	Northbound Afternoon	Hour Totals Morning	Hour Totals Afternoon	Southbound Morning	Southbound Afternoon	Hour Totals Morning	Hour Totals Afternoon	Combined Totals Morning	Combined Totals Afternoon
12:00		0	14			0	16				
12:15		0	16			1	12				
12:30		1	12			0	11				
12:45		0	12	1	54	0	16	1	55	2	109
01:00		1	14			0	10				
01:15		0	11			0	7				
01:30		1	12			0	14				
01:45		0	16	2	53	1	14	1	45	3	98
02:00		0	25			0	18				
02:15		0	15			0	17				
02:30		0	22			0	**39**				
02:45		0	17	0	79	1	**33**	1	107	1	186
03:00		0	20			0	**25**				
03:15		1	16			0	**19**				
03:30		1	**27**			0	32				
03:45		1	**24**	3	87	1	27	1	103	4	190
04:00		0	**23**			0	34				
04:15		2	**24**			2	20				
04:30		2	27			1	24				
04:45		2	18	6	92	1	31	4	109	10	201
05:00		1	24			2	34				
05:15		2	19			1	25				
05:30		0	23			8	24				
05:45		5	17	8	83	9	16	20	99	28	182
06:00		12	12			10	18				
06:15		15	25			14	7				
06:30		24	14			9	14				
06:45		22	6	73	57	7	13	40	52	113	109
07:00		21	16			24	12				
07:15		18	8			25	8				
07:30		**25**	7			**16**	12				
07:45		**32**	9	96	40	**23**	7	88	39	184	79
08:00		**43**	3			**32**	8				
08:15		**27**	3			**28**	7				
08:30		22	7			16	5				
08:45		19	3	111	16	16	9	92	29	203	45
09:00		15	2			13	3				
09:15		10	4			14	8				
09:30		9	8			13	5				
09:45		14	4	48	18	11	3	51	19	99	37
10:00		13	6			9	0				
10:15		16	3			12	1				
10:30		19	2			11	0				
10:45		12	1	60	12	12	3	44	4	104	16
11:00		16	0			16	1				
11:15		13	1			11	2				
11:30		17	3			15	1				
11:45		10	3	56	7	13	2	55	6	111	13
Total		464	598	464	598	398	667	398	667	862	1265
Combined Total		1062		1062		1065		1065		2127	
AM Peak	-	07:30	-	-	-	07:30	-	-	-	-	-
Vol.	-	127	-	-	-	99	-	-	-	-	-
P.H.F.		0.738				0.773					
PM Peak	-	-	03:30	-	-	-	02:30	-	-	-	-
Vol.	-	-	98	-	-	-	116	-	-	-	-
P.H.F.			0.907				0.744				
Percentage		43.7%	56.3%			37.4%	62.6%				
ADT/AADT		ADT 2,127		AADT 2,127							

Counts Unlimited, Inc.

PO Box 1178
Corona, CA 92878
Phone: (951) 268-6268
email: counts@countsunlimited.com

County of Riverside
Travertine Drive
S/ Sweet Avenue
24 Hour Directional Volume Count

CRV006
Site Code: 051-24383

Start Time	4/25/2024 Thu	Northbound Morning	Northbound Afternoon	Hour Totals Morning	Hour Totals Afternoon	Southbound Morning	Southbound Afternoon	Hour Totals Morning	Hour Totals Afternoon	Combined Totals Morning	Combined Totals Afternoon
12:00		1	4			0	7				
12:15		0	8			0	3				
12:30		3	2			1	6				
12:45		0	1	4	15	1	4	2	20	6	35
01:00		0	6			2	5				
01:15		0	7			0	6				
01:30		0	6			0	6				
01:45		0	6	0	25	1	5	3	22	3	47
02:00		0	**6**			0	8				
02:15		0	**13**			0	9				
02:30		0	**3**			1	8				
02:45		0	**12**	0	34	0	8	1	33	1	67
03:00		0	6			0	12				
03:15		0	7			0	6				
03:30		0	3			0	6				
03:45		0	4	0	20	0	5	0	29	0	49
04:00		2	10			0	5				
04:15		3	8			1	11				
04:30		3	5			1	6				
04:45		3	6	11	29	0	10	2	32	13	61
05:00		3	9			0	**11**				
05:15		3	5			1	**11**				
05:30		2	2			0	**8**				
05:45		4	8	12	24	0	**12**	1	42	13	66
06:00		5	2			1	6				
06:15		3	3			2	5				
06:30		3	4			1	14				
06:45		9	6	20	15	2	10	6	35	26	50
07:00		4	5			4	11				
07:15		**15**	6			3	5				
07:30		**15**	3			2	5				
07:45		**15**	1	49	15	**5**	7	14	28	63	43
08:00		**8**	2			**12**	3				
08:15		1	0			**10**	7				
08:30		11	4			**5**	7				
08:45		4	4	24	10	1	12	28	29	52	39
09:00		7	2			2	8				
09:15		4	5			3	2				
09:30		7	2			1	6				
09:45		5	1	23	10	2	5	8	21	31	31
10:00		4	0			2	5				
10:15		2	1			6	0				
10:30		7	1			1	1				
10:45		6	0	19	2	1	2	10	8	29	10
11:00		1	3			3	2				
11:15		5	0			4	1				
11:30		6	1			2	1				
11:45		5	3	17	7	2	1	11	5	28	12
Total		179	206	179	206	86	304	86	304	265	510
Combined Total		385		385		390		390		775	
AM Peak	-	07:15	-	-	-	07:45	-	-	-	-	-
Vol.	-	53	-	-	-	32	-	-	-	-	-
P.H.F.		0.883				0.667					
PM Peak	-	-	02:00	-	-	-	05:00	-	-	-	-
Vol.	-	-	34	-	-	-	42	-	-	-	-
P.H.F.			0.654				0.875				
Percentage		46.5%	53.5%			22.1%	77.9%				
ADT/AADT		ADT 775		AADT 775							

Counts Unlimited, Inc.

PO Box 1178
Corona, CA 92878
Phone: (951) 268-6268
email: counts@countsunlimited.com

CIty of Riverside
Indiana Avenue
W/ La Sierra Avenue
24 Hour Directional Volume Count

RIV001
Site Code: 051-24383

Start Time	4/25/2024 Thu	Eastbound Morning	Eastbound Afternoon	Hour Totals Morning	Hour Totals Afternoon	Westbound Morning	Westbound Afternoon	Hour Totals Morning	Hour Totals Afternoon	Combined Totals Morning	Combined Totals Afternoon
12:00		11	138			9	108				
12:15		5	139			8	106				
12:30		10	166			16	107				
12:45		8	170	34	613	6	106	39	427	73	1040
01:00		10	140			6	124				
01:15		4	128			7	145				
01:30		6	153			8	130				
01:45		4	139	24	560	7	144	28	543	52	1103
02:00		16	163			9	140				
02:15		3	206			8	142				
02:30		8	214			5	162				
02:45		8	236	35	819	4	171	26	615	61	1434
03:00		10	**301**			3	157				
03:15		14	**281**			8	**222**				
03:30		8	**322**			7	**186**				
03:45		18	**371**	50	1275	10	**180**	28	745	78	2020
04:00		26	290			11	**181**				
04:15		24	237			23	153				
04:30		51	223			18	156				
04:45		33	235	134	985	30	166	82	656	216	1641
05:00		32	286			42	213				
05:15		51	242			44	159				
05:30		66	236			59	148				
05:45		63	181	212	945	79	124	224	644	436	1589
06:00		79	187			67	126				
06:15		77	219			57	157				
06:30		79	174			60	159				
06:45		77	145	312	725	92	113	276	555	588	1280
07:00		115	125			95	108				
07:15		114	119			122	105				
07:30		159	118			132	117				
07:45		**177**	93	565	455	**169**	90	518	420	1083	875
08:00		**200**	105			**236**	103				
08:15		**189**	99			**232**	85				
08:30		**241**	99			**145**	83				
08:45		141	80	771	383	75	69	688	340	1459	723
09:00		123	73			86	67				
09:15		97	80			118	81				
09:30		105	68			90	78				
09:45		118	54	443	275	97	48	391	274	834	549
10:00		122	52			96	36				
10:15		129	38			107	47				
10:30		102	40			89	37				
10:45		134	26	487	156	95	34	387	154	874	310
11:00		120	39			106	25				
11:15		101	24			100	28				
11:30		138	23			123	21				
11:45		163	16	522	102	108	24	437	98	959	200
Total		3589	7293	3589	7293	3124	5471	3124	5471	6713	12764
Combined Total		10882		10882		8595		8595		19477	
AM Peak	-	07:45	-	-	-	07:45	-	-	-	-	-
Vol.	-	807	-	-	-	782	-	-	-	-	-
P.H.F.		0.837				0.828					
PM Peak	-	-	03:00	-	-	-	03:15	-	-	-	-
Vol.	-	-	1275	-	-	-	769	-	-	-	-
P.H.F.			0.859				0.866				
Percentage		33.0%	67.0%			36.3%	63.7%				
ADT/AADT		ADT 19,477		AADT 19,477							

Counts Unlimited, Inc.

PO Box 1178
Corona, CA 92878
Phone: (951) 268-6268
email: counts@countsunlimited.com

CIty of Riverside
La Sierra Avenue
S/ Victoria Avenue
24 Hour Directional Volume Count

RIV002
Site Code: 051-24383

Start Time	4/25/2024 Thu	Northbound Morning	Northbound Afternoon	Hour Totals Morning	Hour Totals Afternoon	Southbound Morning	Southbound Afternoon	Hour Totals Morning	Hour Totals Afternoon	Combined Totals Morning	Combined Totals Afternoon
12:00		15	212			51	198				
12:15		10	173			25	195				
12:30		13	193			19	222				
12:45		13	222	51	800	18	224	113	839	164	1639
01:00		8	155			17	196				
01:15		8	189			23	200				
01:30		7	203			11	213				
01:45		13	230	36	777	16	269	67	878	103	1655
02:00		15	204			11	223				
02:15		11	216			17	253				
02:30		17	228			16	304				
02:45		17	**299**	60	947	9	269	53	1049	113	1996
03:00		21	**244**			9	327				
03:15		36	**277**			11	361				
03:30		38	**251**			14	381				
03:45		53	242	148	1014	9	361	43	1430	191	2444
04:00		79	251			19	429				
04:15		122	239			13	404				
04:30		148	225			17	**416**				
04:45		148	223	497	938	26	**432**	75	1681	572	2619
05:00		156	189			31	**455**				
05:15		151	230			56	**497**				
05:30		162	213			72	404				
05:45		155	176	624	808	77	386	236	1742	860	2550
06:00		195	168			99	331				
06:15		192	196			87	276				
06:30		227	162			120	303				
06:45		227	137	841	663	99	275	405	1185	1246	1848
07:00		271	132			108	253				
07:15		**319**	126			110	242				
07:30		**312**	105			140	246				
07:45		**314**	105	1216	468	149	229	507	970	1723	1438
08:00		**303**	99			191	193				
08:15		314	89			160	225				
08:30		230	93			145	208				
08:45		249	77	1096	358	124	178	620	804	1716	1162
09:00		264	66			129	145				
09:15		255	72			108	151				
09:30		207	55			122	158				
09:45		248	59	974	252	140	119	499	573	1473	825
10:00		189	57			131	107				
10:15		193	55			134	92				
10:30		227	29			134	87				
10:45		196	38	805	179	142	68	541	354	1346	533
11:00		172	28			**167**	82				
11:15		193	37			**156**	62				
11:30		189	20			**150**	56				
11:45		167	18	721	103	**180**	42	653	242	1374	345
Total		7069	7307	7069	7307	3812	11747	3812	11747	10881	19054
Combined Total		14376		14376		15559		15559		29935	
AM Peak	-	07:15	-	-	-	11:00	-	-	-	-	-
Vol.	-	1248	-	-	-	653	-	-	-	-	-
P.H.F.		0.978				0.855					
PM Peak	-	-	02:45	-	-	-	04:30	-	-	-	-
Vol.	-	-	1071	-	-	-	1800	-	-	-	-
P.H.F.			0.895				0.905				
Percentage		49.2%	50.8%			24.5%	75.5%				
ADT/AADT		ADT 29,935		AADT 29,935							

APPENDIX 3.2: EXISTING (2024) CONDITIONS INTERSECTION OPERATIONS ANALYSIS WORKSHEETS

This Page Intentionally Left Blank

Lane Group	WBL	WBT	WBR	NBL	NBT	SBT	SBR
Lane Configurations							
Traffic Volume (vph)	275	0	461	611	1303	924	133
Future Volume (vph)	275	0	461	611	1303	924	133
Turn Type	Split	NA	Perm	Prot	NA	NA	Perm
Protected Phases	8	8		5	2	6	
Permitted Phases			8				6
Detector Phase	8	8	8	5	2	6	6
Switch Phase							
Minimum Initial (s)	5.0	5.0	5.0	5.0	5.0	5.0	5.0
Minimum Split (s)	10.0	10.0	10.0	9.0	26.5	29.5	29.5
Total Split (s)	37.0	37.0	37.0	30.0	63.0	33.0	33.0
Total Split (%)	37.0%	37.0%	37.0%	30.0%	63.0%	33.0%	33.0%
Yellow Time (s)	4.0	4.0	4.0	3.0	4.5	4.5	4.5
All-Red Time (s)	1.0	1.0	1.0	1.0	1.0	1.0	1.0
Lost Time Adjust (s)	0.0	0.0	0.0	0.0	0.0	0.0	0.0
Total Lost Time (s)	5.0	5.0	5.0	4.0	5.5	5.5	5.5
Lead/Lag				Lead		Lag	Lag
Lead-Lag Optimize?				Yes		Yes	Yes
Recall Mode	None	None	None	None	C-Min	C-Min	C-Min
Act Effct Green (s)	21.2	21.2	21.2	22.5	68.3	41.8	41.8
Actuated g/C Ratio	0.21	0.21	0.21	0.23	0.68	0.42	0.42
v/c Ratio	0.73	0.68	0.67	0.82	0.39	0.45	0.19
Control Delay (s/veh)	48.0	34.5	33.5	42.0	13.5	23.8	6.2
Queue Delay	0.0	0.0	0.0	0.0	0.3	0.0	0.0
Total Delay (s/veh)	48.0	34.5	33.5	42.0	13.8	23.8	6.2
LOS	D	C	C	D	B	C	A
Approach Delay (s/veh)		38.7			22.8	21.6	
Approach LOS		D			C	C	

Intersection Summary	
Cycle Length: 100	
Actuated Cycle Length: 100	
Offset: 0 (0%), Referenced to phase 2:NBT and 6:SBT, Start of Yellow, Master Intersection	
Natural Cycle: 60	
Control Type: Actuated-Coordinated	
Maximum v/c Ratio: 0.82	
Intersection Signal Delay (s/veh): 25.6	Intersection LOS: C
Intersection Capacity Utilization 64.6%	ICU Level of Service C
Analysis Period (min) 15	

Splits and Phases: 1: La Sierra Av. & SR-91 WB Ramps



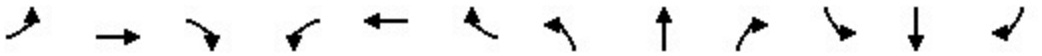

Movement	EBL	EBT	EBR	WBL	WBT	WBR	NBL	NBT	NBR	SBL	SBT	SBR
Lane Configurations												
Traffic Volume (veh/h)	0	0	0	275	0	461	611	1303	0	0	924	133
Future Volume (veh/h)	0	0	0	275	0	461	611	1303	0	0	924	133
Initial Q (Qb), veh				0	0	0	0	0	0	0	0	0
Lane Width Adj.				1.00	1.00	1.00	1.00	1.00	1.00	1.00	1.00	1.00
Ped-Bike Adj(A_pbT)				1.00		1.00	1.00		1.00	1.00		0.98
Parking Bus, Adj				1.00	1.00	1.00	1.00	1.00	1.00	1.00	1.00	1.00
Work Zone On Approach					No			No			No	
Adj Sat Flow, veh/h/ln				1856	1900	1885	1870	1870	0	0	1856	1826
Adj Flow Rate, veh/h				380	0	198	630	1343	0	0	953	94
Peak Hour Factor				0.97	0.97	0.97	0.97	0.97	0.97	0.97	0.97	0.97
Percent Heavy Veh, %				3	0	1	2	2	0	0	3	5
Cap, veh/h				543	0	245	692	3786	0	0	2539	763
Arrive On Green				0.15	0.00	0.15	0.40	1.00	0.00	0.00	0.50	0.50
Sat Flow, veh/h				3534	0	1598	3456	5274	0	0	5233	1522
Grp Volume(v), veh/h				380	0	198	630	1343	0	0	953	94
Grp Sat Flow(s),veh/h/ln				1767	0	1598	1728	1702	0	0	1689	1522
Q Serve(g_s), s				10.2	0.0	12.0	17.2	0.0	0.0	0.0	11.6	3.3
Cycle Q Clear(g_c), s				10.2	0.0	12.0	17.2	0.0	0.0	0.0	11.6	3.3
Prop In Lane				1.00		1.00	1.00		0.00	0.00		1.00
Lane Grp Cap(c), veh/h				543	0	245	692	3786	0	0	2539	763
V/C Ratio(X)				0.70	0.00	0.81	0.91	0.35	0.00	0.00	0.38	0.12
Avail Cap(c_a), veh/h				1131	0	511	898	3786	0	0	2539	763
HCM Platoon Ratio				1.00	1.00	1.00	2.00	2.00	1.00	1.00	1.00	1.00
Upstream Filter(I)				1.00	0.00	1.00	0.73	0.73	0.00	0.00	1.00	1.00
Uniform Delay (d), s/veh				40.1	0.0	40.9	29.1	0.0	0.0	0.0	15.3	13.3
Incr Delay (d2), s/veh				1.2	0.0	4.7	7.4	0.2	0.0	0.0	0.4	0.3
Initial Q Delay(d3), s/veh				0.0	0.0	0.0	0.0	0.0	0.0	0.0	0.0	0.0
%ile BackOfQ(50%),veh/ln				4.3	0.0	4.8	5.8	0.1	0.0	0.0	4.1	1.1
Unsig. Movement Delay, s/veh												
LnGrp Delay(d), s/veh				41.4	0.0	45.6	36.5	0.2	0.0	0.0	15.7	13.6
LnGrp LOS				D		D	D	A			B	B
Approach Vol, veh/h					578			1973			1047	
Approach Delay, s/veh					42.8			11.8			15.5	
Approach LOS					D			B			B	

Timer - Assigned Phs	2		5	6		8						
Phs Duration (G+Y+Rc), s	79.7		24.0	55.6		20.3						
Change Period (Y+Rc), s	5.5		4.0	5.5		5.0						
Max Green Setting (Gmax), s	57.5		26.0	27.5		32.0						
Max Q Clear Time (g_c+I1), s	2.0		19.2	13.6		14.0						
Green Ext Time (p_c), s	12.3		0.8	5.4		1.4						

Intersection Summary		
HCM 7th Control Delay, s/veh	17.9	
HCM 7th LOS	B	

Notes
User approved volume balancing among the lanes for turning movement.

Lane Group	EBL	EBT	EBR	NBT	NBR	SBL	SBT
Lane Configurations							
Traffic Volume (vph)	410	1	399	1456	455	302	895
Future Volume (vph)	410	1	399	1456	455	302	895
Turn Type	Split	NA	Perm	NA	Perm	Prot	NA
Protected Phases	4	4		2		1	6
Permitted Phases			4		2		
Detector Phase	4	4	4	2	2	1	6
Switch Phase							
Minimum Initial (s)	5.0	5.0	5.0	5.0	5.0	5.0	5.0
Minimum Split (s)	10.0	10.0	10.0	29.5	29.5	9.0	26.5
Total Split (s)	37.0	37.0	37.0	45.0	45.0	18.0	63.0
Total Split (%)	37.0%	37.0%	37.0%	45.0%	45.0%	18.0%	63.0%
Yellow Time (s)	4.0	4.0	4.0	4.5	4.5	3.0	4.5
All-Red Time (s)	1.0	1.0	1.0	1.0	1.0	1.0	1.0
Lost Time Adjust (s)	0.0	0.0	0.0	0.0	0.0	0.0	0.0
Total Lost Time (s)	5.0	5.0	5.0	5.5	5.5	4.0	5.5
Lead/Lag				Lag	Lag	Lead	
Lead-Lag Optimize?				Yes	Yes	Yes	
Recall Mode	None	None	None	C-Min	C-Min	None	C-Min
Act Effct Green (s)	23.3	23.3	23.3	48.9	48.9	13.3	66.2
Actuated g/C Ratio	0.23	0.23	0.23	0.49	0.49	0.13	0.66
v/c Ratio	0.75	0.72	0.62	0.62	0.48	0.70	0.28
Control Delay (s/veh)	46.7	37.2	23.2	21.5	3.7	48.8	1.8
Queue Delay	0.0	0.0	0.0	0.0	0.0	0.0	0.0
Total Delay (s/veh)	46.7	37.2	23.2	21.5	3.7	48.8	1.8
LOS	D	D	C	C	A	D	A
Approach Delay (s/veh)		36.1		17.2			13.7
Approach LOS		D		B			B

Intersection Summary	
Cycle Length: 100	
Actuated Cycle Length: 100	
Offset: 28 (28%), Referenced to phase 2:NBT and 6:SBT, Start of Yellow	
Natural Cycle: 60	
Control Type: Actuated-Coordinated	
Maximum v/c Ratio: 0.75	
Intersection Signal Delay (s/veh): 20.1	Intersection LOS: C
Intersection Capacity Utilization 64.6%	ICU Level of Service C
Analysis Period (min) 15	

Splits and Phases: 2: La Sierra Av. & SR-91 EB Ramps



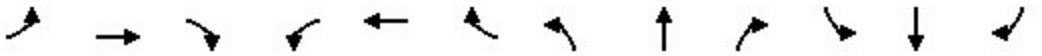

Movement	EBL	EBT	EBR	WBL	WBT	WBR	NBL	NBT	NBR	SBL	SBT	SBR
Lane Configurations												
Traffic Volume (veh/h)	410	1	399	0	0	0	0	1456	455	302	895	0
Future Volume (veh/h)	410	1	399	0	0	0	0	1456	455	302	895	0
Initial Q (Qb), veh	0	0	0				0	0	0	0	0	0
Lane Width Adj.	1.00	1.00	1.00				1.00	1.00	1.00	1.00	1.00	1.00
Ped-Bike Adj(A_pbT)	1.00		1.00				1.00		1.00	1.00		1.00
Parking Bus, Adj	1.00	1.00	1.00				1.00	1.00	1.00	1.00	1.00	1.00
Work Zone On Approach		No						No			No	
Adj Sat Flow, veh/h/ln	1885	1900	1811				0	1856	1856	1841	1856	0
Adj Flow Rate, veh/h	486	0	126				0	1517	322	315	932	0
Peak Hour Factor	0.96	0.96	0.96				0.96	0.96	0.96	0.96	0.96	0.96
Percent Heavy Veh, %	1	0	6				0	3	3	4	3	0
Cap, veh/h	594	0	254				0	2914	903	389	3696	0
Arrive On Green	0.17	0.00	0.17				0.00	0.58	0.58	0.04	0.24	0.00
Sat Flow, veh/h	3591	0	1535				0	5233	1570	3401	5233	0
Grp Volume(v), veh/h	486	0	126				0	1517	322	315	932	0
Grp Sat Flow(s),veh/h/ln	1795	0	1535				0	1689	1570	1700	1689	0
Q Serve(g_s), s	13.1	0.0	7.5				0.0	18.2	11.0	9.2	14.9	0.0
Cycle Q Clear(g_c), s	13.1	0.0	7.5				0.0	18.2	11.0	9.2	14.9	0.0
Prop In Lane	1.00		1.00				0.00		1.00	1.00		0.00
Lane Grp Cap(c), veh/h	594	0	254				0	2914	903	389	3696	0
V/C Ratio(X)	0.82	0.00	0.50				0.00	0.52	0.36	0.81	0.25	0.00
Avail Cap(c_a), veh/h	1149	0	491				0	2914	903	476	3696	0
HCM Platoon Ratio	1.00	1.00	1.00				1.00	1.00	1.00	0.33	0.33	1.00
Upstream Filter(I)	1.00	0.00	1.00				0.00	0.57	0.57	0.85	0.85	0.00
Uniform Delay (d), s/veh	40.3	0.0	37.9				0.0	12.9	11.3	47.0	15.9	0.0
Incr Delay (d2), s/veh	2.1	0.0	1.1				0.0	0.4	0.6	6.7	0.1	0.0
Initial Q Delay(d3), s/veh	0.0	0.0	0.0				0.0	0.0	0.0	0.0	0.0	0.0
%ile BackOfQ(50%),veh/ln	5.7	0.0	2.8				0.0	6.0	3.5	4.4	6.6	0.0
Unsig. Movement Delay, s/veh												
LnGrp Delay(d), s/veh	42.4	0.0	39.1				0.0	13.3	12.0	53.8	16.0	0.0
LnGrp LOS	D		D					B	B	D	B	
Approach Vol, veh/h		612						1839			1247	
Approach Delay, s/veh		41.7						13.0			25.6	
Approach LOS		D						B			C	

Timer - Assigned Phs	1	2		4		6
Phs Duration (G+Y+Rc), s	15.4	63.0		21.5		78.5
Change Period (Y+Rc), s	4.0	5.5		5.0		5.5
Max Green Setting (Gmax), s	14.0	39.5		32.0		57.5
Max Q Clear Time (g_c+I1), s	11.2	20.2		15.1		16.9
Green Ext Time (p_c), s	0.2	11.3		1.5		7.1

Intersection Summary	
HCM 7th Control Delay, s/veh	22.0
HCM 7th LOS	C

Notes

User approved volume balancing among the lanes for turning movement.

Lane Group	EBL	EBT	EBR	WBL	WBT	WBR	NBL	NBT	NBR	SBL	SBT	SBR
Lane Configurations												
Traffic Volume (vph)	435	200	138	93	210	251	327	1371	147	123	894	437
Future Volume (vph)	435	200	138	93	210	251	327	1371	147	123	894	437
Turn Type	Prot	NA	Perm	Prot	NA	Perm	Prot	NA	Perm	Prot	NA	Perm
Protected Phases	7	4		3	8		5	2		1	6	
Permitted Phases			4			8			2			6
Detector Phase	7	4	4	3	8	8	5	2	2	1	6	6
Switch Phase												
Minimum Initial (s)	5.0	10.0	10.0	5.0	10.0	10.0	5.0	10.0	10.0	5.0	10.0	10.0
Minimum Split (s)	9.6	43.4	43.4	9.6	43.4	43.4	9.6	37.8	37.8	9.6	32.8	32.8
Total Split (s)	22.3	53.7	53.7	12.0	43.4	43.4	18.2	44.0	44.0	10.3	36.1	36.1
Total Split (%)	18.6%	44.8%	44.8%	10.0%	36.2%	36.2%	15.2%	36.7%	36.7%	8.6%	30.1%	30.1%
Yellow Time (s)	3.6	4.4	4.4	3.6	4.4	4.4	3.6	4.8	4.8	3.6	4.8	4.8
All-Red Time (s)	1.0	1.0	1.0	1.0	1.0	1.0	1.0	1.0	1.0	1.0	1.0	1.0
Lost Time Adjust (s)	0.0	0.0	0.0	0.0	0.0	0.0	0.0	0.0	0.0	0.0	0.0	0.0
Total Lost Time (s)	4.6	5.4	5.4	4.6	5.4	5.4	4.6	5.8	5.8	4.6	5.8	5.8
Lead/Lag	Lead	Lag	Lag	Lead	Lag	Lag	Lead	Lag	Lag	Lead	Lag	Lag
Lead-Lag Optimize?	Yes	Yes	Yes	Yes	Yes	Yes	Yes	Yes	Yes	Yes	Yes	Yes
Recall Mode	None	None	None	None	None	None	None	Min	Min	None	Min	Min
Act Effct Green (s)	17.3	26.7	26.7	6.8	16.1	16.1	13.4	38.0	38.0	5.8	30.4	30.4
Actuated g/C Ratio	0.18	0.27	0.27	0.07	0.16	0.16	0.14	0.39	0.39	0.06	0.31	0.31
v/c Ratio	0.79	0.23	0.28	0.43	0.40	0.66	0.76	0.76	0.23	0.67	0.62	0.59
Control Delay (s/veh)	50.3	27.5	5.4	52.2	37.7	19.8	53.9	30.6	5.1	64.2	32.4	6.5
Queue Delay	0.0	0.0	0.0	0.0	0.0	0.0	0.0	0.0	0.0	0.0	0.0	0.0
Total Delay (s/veh)	50.3	27.5	5.4	52.2	37.7	19.8	53.9	30.6	5.1	64.2	32.4	6.5
LOS	D	C	A	D	D	B	D	C	A	E	C	A
Approach Delay (s/veh)		36.4			32.0			32.6			27.3	
Approach LOS		D			C			C			C	

Intersection Summary	
Cycle Length: 120	
Actuated Cycle Length: 97.9	
Natural Cycle: 115	
Control Type: Actuated-Uncoordinated	
Maximum v/c Ratio: 0.79	
Intersection Signal Delay (s/veh): 31.5	Intersection LOS: C
Intersection Capacity Utilization 70.6%	ICU Level of Service C
Analysis Period (min) 15	

Splits and Phases: 3: La Sierra Av. & Indiana Av./S. Indiana Av.

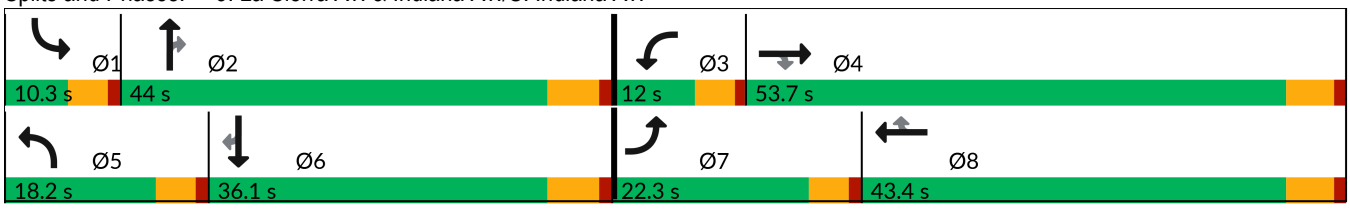

Movement	EBL	EBT	EBR	WBL	WBT	WBR	NBL	NBT	NBR	SBL	SBT	SBR
Lane Configurations												
Traffic Volume (veh/h)	435	200	138	93	210	251	327	1371	147	123	894	437
Future Volume (veh/h)	435	200	138	93	210	251	327	1371	147	123	894	437
Initial Q (Qb), veh	0	0	0	0	0	0	0	0	0	0	0	0
Lane Width Adj.	1.00	1.00	1.00	1.00	1.00	1.00	1.00	1.00	1.00	1.00	1.00	1.00
Ped-Bike Adj(A_pbT)	1.00		1.00	1.00		0.99	1.00		1.00	1.00		0.98
Parking Bus, Adj	1.00	1.00	1.00	1.00	1.00	1.00	1.00	1.00	1.00	1.00	1.00	1.00
Work Zone On Approach		No			No			No			No	
Adj Sat Flow, veh/h/ln	1870	1870	1870	1870	1870	1870	1870	1870	1870	1870	1870	1870
Adj Flow Rate, veh/h	478	220	99	102	231	196	359	1507	98	135	982	255
Peak Hour Factor	0.91	0.91	0.91	0.91	0.91	0.91	0.91	0.91	0.91	0.91	0.91	0.91
Percent Heavy Veh, %	2	2	2	2	2	2	2	2	2	2	2	2
Cap, veh/h	556	1010	450	175	619	275	433	1958	607	201	1615	491
Arrive On Green	0.16	0.28	0.28	0.05	0.17	0.17	0.13	0.38	0.38	0.06	0.32	0.32
Sat Flow, veh/h	3456	3554	1583	3456	3554	1577	3456	5106	1583	3456	5106	1551
Grp Volume(v), veh/h	478	220	99	102	231	196	359	1507	98	135	982	255
Grp Sat Flow(s),veh/h/ln	1728	1777	1583	1728	1777	1577	1728	1702	1583	1728	1702	1551
Q Serve(g_s), s	12.3	4.3	4.4	2.6	5.2	10.7	9.3	23.6	3.7	3.5	14.9	12.3
Cycle Q Clear(g_c), s	12.3	4.3	4.4	2.6	5.2	10.7	9.3	23.6	3.7	3.5	14.9	12.3
Prop In Lane	1.00		1.00	1.00		1.00	1.00		1.00	1.00		1.00
Lane Grp Cap(c), veh/h	556	1010	450	175	619	275	433	1958	607	201	1615	491
V/C Ratio(X)	0.86	0.22	0.22	0.58	0.37	0.71	0.83	0.77	0.16	0.67	0.61	0.52
Avail Cap(c_a), veh/h	670	1880	838	280	1479	656	515	2137	662	216	1695	515
HCM Platoon Ratio	1.00	1.00	1.00	1.00	1.00	1.00	1.00	1.00	1.00	1.00	1.00	1.00
Upstream Filter(I)	1.00	1.00	1.00	1.00	1.00	1.00	1.00	1.00	1.00	1.00	1.00	1.00
Uniform Delay (d), s/veh	37.3	24.9	24.9	42.4	33.3	35.6	39.0	24.6	18.5	42.1	26.4	25.5
Incr Delay (d2), s/veh	8.3	0.1	0.2	1.1	0.4	3.4	8.1	1.8	0.2	5.5	0.7	1.2
Initial Q Delay(d3), s/veh	0.0	0.0	0.0	0.0	0.0	0.0	0.0	0.0	0.0	0.0	0.0	0.0
%ile BackOfQ(50%),veh/ln	5.6	1.8	1.6	1.1	2.2	4.2	4.2	8.9	1.3	1.6	5.7	4.4
Unsig. Movement Delay, s/veh												
LnGrp Delay(d), s/veh	45.6	25.0	25.2	43.5	33.7	39.0	47.0	26.4	18.7	47.6	27.1	26.7
LnGrp LOS	D	C	C	D	C	D	D	C	B	D	C	C
Approach Vol, veh/h		797			529			1964			1372	
Approach Delay, s/veh		37.4			37.5			29.8			29.1	
Approach LOS		D			D			C			C	

Timer - Assigned Phs	1	2	3	4	5	6	7	8
Phs Duration (G+Y+Rc), s	9.9	40.8	9.2	31.3	16.0	34.7	19.3	21.3
Change Period (Y+Rc), s	4.6	5.8	4.6	5.4	4.6	5.8	4.6	5.4
Max Green Setting (Gmax), s	5.7	38.2	7.4	48.3	13.6	30.3	17.7	38.0
Max Q Clear Time (g_c+I1), s	5.5	25.6	4.6	6.4	11.3	16.9	14.3	12.7
Green Ext Time (p_c), s	0.0	9.4	0.0	1.7	0.2	7.7	0.4	2.0

Intersection Summary	
HCM 7th Control Delay, s/veh	31.8
HCM 7th LOS	C

Lane Group	EBL	EBT	EBR	WBL	WBT	WBR	NBL	NBT	SBL	SBT
Lane Configurations										
Traffic Volume (vph)	46	77	56	66	93	202	41	1017	106	518
Future Volume (vph)	46	77	56	66	93	202	41	1017	106	518
Turn Type	Prot	NA	Perm	Prot	NA	Perm	Prot	NA	Prot	NA
Protected Phases	7	4		3	8		5	2	1	6
Permitted Phases			4			8				
Detector Phase	7	4	4	3	8	8	5	2	1	6
Switch Phase										
Minimum Initial (s)	5.0	10.0	10.0	5.0	10.0	10.0	5.0	10.0	5.0	10.0
Minimum Split (s)	9.6	34.1	34.1	9.6	33.8	33.8	9.6	35.8	9.6	33.8
Total Split (s)	9.9	34.2	34.2	12.0	36.3	36.3	13.4	58.8	15.0	60.4
Total Split (%)	8.3%	28.5%	28.5%	10.0%	30.3%	30.3%	11.2%	49.0%	12.5%	50.3%
Yellow Time (s)	3.6	4.1	4.1	3.6	4.8	4.8	3.6	4.8	3.6	4.8
All-Red Time (s)	1.0	1.0	1.0	1.0	1.0	1.0	1.0	1.0	1.0	1.0
Lost Time Adjust (s)	0.0	0.0	0.0	0.0	0.0	0.0	0.0	0.0	0.0	0.0
Total Lost Time (s)	4.6	5.1	5.1	4.6	5.8	5.8	4.6	5.8	4.6	5.8
Lead/Lag	Lead	Lag	Lag	Lead	Lag	Lag	Lead	Lag	Lead	Lag
Lead-Lag Optimize?	Yes	Yes	Yes	Yes	Yes	Yes	Yes	Yes	Yes	Yes
Recall Mode	None	None	None	None	None	None	None	Min	None	Min
Act Effct Green (s)	5.5	13.9	13.9	7.2	14.8	14.8	7.0	45.8	9.9	53.7
Actuated g/C Ratio	0.06	0.15	0.15	0.08	0.16	0.16	0.07	0.48	0.10	0.57
v/c Ratio	0.26	0.32	0.20	0.56	0.36	0.57	0.35	0.80	0.65	0.31
Control Delay (s/veh)	52.8	42.8	2.5	64.6	42.2	15.3	55.3	26.0	62.6	13.7
Queue Delay	0.0	0.0	0.0	0.0	0.0	0.0	0.0	0.0	0.0	0.0
Total Delay (s/veh)	52.8	42.8	2.5	64.6	42.2	15.3	55.3	26.0	62.6	13.7
LOS	D	D	A	E	D	B	E	C	E	B
Approach Delay (s/veh)		32.8			31.2			27.0		21.7
Approach LOS		C			C			C		C

Intersection Summary	
Cycle Length: 120	
Actuated Cycle Length: 94.8	
Natural Cycle: 100	
Control Type: Actuated-Uncoordinated	
Maximum v/c Ratio: 0.80	
Intersection Signal Delay (s/veh): 26.6	Intersection LOS: C
Intersection Capacity Utilization 65.9%	ICU Level of Service C
Analysis Period (min) 15	

Splits and Phases: 4: La Sierra Av. & Victoria Av.

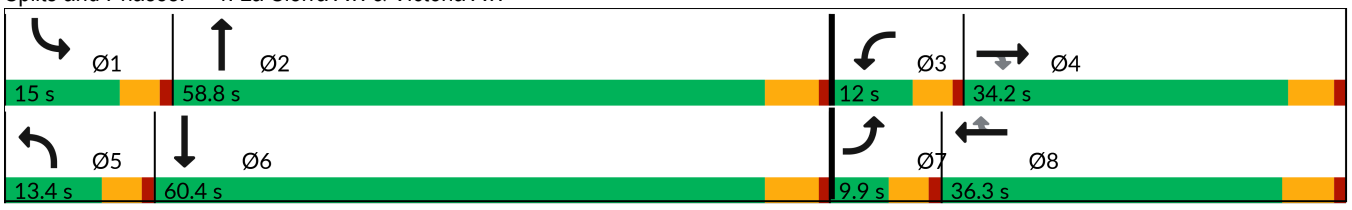

Movement	EBL	EBT	EBR	WBL	WBT	WBR	NBL	NBT	NBR	SBL	SBT	SBR
Lane Configurations												
Traffic Volume (veh/h)	46	77	56	66	93	202	41	1017	185	106	518	26
Future Volume (veh/h)	46	77	56	66	93	202	41	1017	185	106	518	26
Initial Q (Qb), veh	0	0	0	0	0	0	0	0	0	0	0	0
Lane Width Adj.	1.00	1.00	1.00	1.00	1.00	1.00	1.00	1.00	1.00	1.00	1.00	1.00
Ped-Bike Adj(A_pbT)	1.00		0.99	1.00		0.98	1.00		1.00	1.00		1.00
Parking Bus, Adj	1.00	1.00	1.00	1.00	1.00	1.00	1.00	1.00	1.00	1.00	1.00	1.00
Work Zone On Approach		No			No			No			No	
Adj Sat Flow, veh/h/ln	1870	1870	1870	1870	1870	1870	1870	1870	1870	1870	1870	1870
Adj Flow Rate, veh/h	52	87	24	74	104	142	46	1143	179	119	582	28
Peak Hour Factor	0.89	0.89	0.89	0.89	0.89	0.89	0.89	0.89	0.89	0.89	0.89	0.89
Percent Heavy Veh, %	2	2	2	2	2	2	2	2	2	2	2	2
Cap, veh/h	144	242	202	95	264	218	70	1497	234	150	1833	88
Arrive On Green	0.04	0.13	0.13	0.05	0.14	0.14	0.04	0.49	0.49	0.08	0.53	0.53
Sat Flow, veh/h	3456	1870	1563	1781	1870	1550	1781	3080	481	1781	3451	166
Grp Volume(v), veh/h	52	87	24	74	104	142	46	658	664	119	299	311
Grp Sat Flow(s),veh/h/ln	1728	1870	1563	1781	1870	1550	1781	1777	1784	1781	1777	1841
Q Serve(g_s), s	1.2	3.6	1.1	3.5	4.3	7.3	2.1	25.4	25.7	5.5	8.0	8.0
Cycle Q Clear(g_c), s	1.2	3.6	1.1	3.5	4.3	7.3	2.1	25.4	25.7	5.5	8.0	8.0
Prop In Lane	1.00		1.00	1.00		1.00	1.00		0.27	1.00		0.09
Lane Grp Cap(c), veh/h	144	242	202	95	264	218	70	864	867	150	944	978
V/C Ratio(X)	0.36	0.36	0.12	0.78	0.39	0.65	0.66	0.76	0.77	0.79	0.32	0.32
Avail Cap(c_a), veh/h	217	646	540	157	677	561	186	1118	1123	220	1152	1193
HCM Platoon Ratio	1.00	1.00	1.00	1.00	1.00	1.00	1.00	1.00	1.00	1.00	1.00	1.00
Upstream Filter(I)	1.00	1.00	1.00	1.00	1.00	1.00	1.00	1.00	1.00	1.00	1.00	1.00
Uniform Delay (d), s/veh	39.3	33.5	32.4	39.4	32.9	34.2	39.9	17.7	17.7	37.8	11.1	11.1
Incr Delay (d2), s/veh	0.6	0.9	0.3	5.1	1.0	3.2	3.9	2.8	2.9	6.7	0.3	0.3
Initial Q Delay(d3), s/veh	0.0	0.0	0.0	0.0	0.0	0.0	0.0	0.0	0.0	0.0	0.0	0.0
%ile BackOfQ(50%),veh/ln	0.5	1.6	0.4	1.6	1.9	2.8	1.0	9.5	9.6	2.6	2.7	2.8
Unsig. Movement Delay, s/veh												
LnGrp Delay(d), s/veh	39.8	34.4	32.7	44.4	33.9	37.5	43.8	20.4	20.6	44.5	11.4	11.4
LnGrp LOS	D	C	C	D	C	D	D	C	C	D	B	B
Approach Vol, veh/h		163			320			1368			729	
Approach Delay, s/veh		35.9			37.9			21.3			16.8	
Approach LOS		D			D			C			B	

Timer - Assigned Phs	1	2	3	4	5	6	7	8
Phs Duration (G+Y+Rc), s	11.7	46.7	9.1	16.7	7.9	50.5	8.1	17.7
Change Period (Y+Rc), s	4.6	5.8	4.6	* 5.8	4.6	5.8	4.6	5.8
Max Green Setting (Gmax), s	10.4	53.0	7.4	* 29	8.8	54.6	5.3	30.5
Max Q Clear Time (g_c+I1), s	7.5	27.7	5.5	5.6	4.1	10.0	3.2	9.3
Green Ext Time (p_c), s	0.0	13.3	0.0	0.5	0.0	5.6	0.0	0.9

Intersection Summary	
HCM 7th Control Delay, s/veh	23.0
HCM 7th LOS	C

Notes

* HCM 7th computational engine requires equal clearance times for the phases crossing the barrier.

Lane Group	WBL	WBR	NBT	NBR	SBL	SBT
Lane Configurations						
Traffic Volume (vph)	18	228	1092	22	79	506
Future Volume (vph)	18	228	1092	22	79	506
Turn Type	Prot	Perm	NA	Perm	Prot	NA
Protected Phases	8		2		1	6
Permitted Phases		8		2		
Detector Phase	8	8	2	2	1	6
Switch Phase						
Minimum Initial (s)	10.0	10.0	10.0	10.0	5.0	10.0
Minimum Split (s)	33.4	33.4	27.5	27.5	9.6	16.5
Total Split (s)	36.0	36.0	64.0	64.0	20.0	84.0
Total Split (%)	30.0%	30.0%	53.3%	53.3%	16.7%	70.0%
Yellow Time (s)	4.4	4.4	5.5	5.5	3.6	5.5
All-Red Time (s)	1.0	1.0	1.0	1.0	1.0	1.0
Lost Time Adjust (s)	0.0	0.0	0.0	0.0	0.0	0.0
Total Lost Time (s)	5.4	5.4	6.5	6.5	4.6	6.5
Lead/Lag			Lag	Lag	Lead	
Lead-Lag Optimize?			Yes	Yes	Yes	
Recall Mode	None	None	Min	Min	None	Min
Act Effct Green (s)	13.4	13.4	36.1	36.1	9.1	46.9
Actuated g/C Ratio	0.18	0.18	0.49	0.49	0.12	0.64
v/c Ratio	0.06	0.52	0.71	0.03	0.41	0.25
Control Delay (s/veh)	31.5	8.7	18.2	6.6	41.9	5.8
Queue Delay	0.0	0.0	0.0	0.0	0.0	0.0
Total Delay (s/veh)	31.5	8.7	18.2	6.6	41.9	5.8
LOS	C	A	B	A	D	A
Approach Delay (s/veh)	10.4		18.0			10.7
Approach LOS	B		B			B

Intersection Summary	
Cycle Length: 120	
Actuated Cycle Length: 73.6	
Natural Cycle: 80	
Control Type: Actuated-Uncoordinated	
Maximum v/c Ratio: 0.71	
Intersection Signal Delay (s/veh): 14.8	Intersection LOS: B
Intersection Capacity Utilization 56.6%	ICU Level of Service B
Analysis Period (min) 15	

Splits and Phases: 5: La Sierra Av. & McAllister Pkwy.

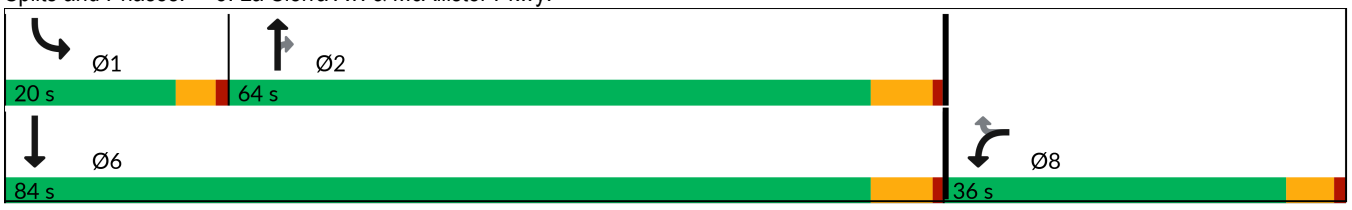



Movement	WBL	WBR	NBT	NBR	SBL	SBT
Lane Configurations						
Traffic Volume (veh/h)	18	228	1092	22	79	506
Future Volume (veh/h)	18	228	1092	22	79	506
Initial Q (Qb), veh	0	0	0	0	0	0
Lane Width Adj.	1.00	1.00	1.00	1.00	1.00	1.00
Ped-Bike Adj(A_pbT)	1.00	1.00		1.00	1.00	
Parking Bus, Adj	1.00	1.00	1.00	1.00	1.00	1.00
Work Zone On Approach	No		No			No
Adj Sat Flow, veh/h/ln	1870	1870	1870	1870	1870	1870
Adj Flow Rate, veh/h	20	138	1227	22	89	569
Peak Hour Factor	0.89	0.89	0.89	0.89	0.89	0.89
Percent Heavy Veh, %	2	2	2	2	2	2
Cap, veh/h	266	237	1856	828	115	2347
Arrive On Green	0.15	0.15	0.52	0.52	0.06	0.66
Sat Flow, veh/h	1781	1585	3647	1585	1781	3647
Grp Volume(v), veh/h	20	138	1227	22	89	569
Grp Sat Flow(s),veh/h/ln	1781	1585	1777	1585	1781	1777
Q Serve(g_s), s	0.6	5.1	15.8	0.4	3.1	4.1
Cycle Q Clear(g_c), s	0.6	5.1	15.8	0.4	3.1	4.1
Prop In Lane	1.00	1.00		1.00	1.00	
Lane Grp Cap(c), veh/h	266	237	1856	828	115	2347
V/C Ratio(X)	0.08	0.58	0.66	0.03	0.77	0.24
Avail Cap(c_a), veh/h	871	775	3265	1456	438	4400
HCM Platoon Ratio	1.00	1.00	1.00	1.00	1.00	1.00
Upstream Filter(I)	1.00	1.00	1.00	1.00	1.00	1.00
Uniform Delay (d), s/veh	22.9	24.8	10.9	7.2	28.8	4.3
Incr Delay (d2), s/veh	0.1	2.3	0.6	0.0	4.1	0.1
Initial Q Delay(d3), s/veh	0.0	0.0	0.0	0.0	0.0	0.0
%ile BackOfQ(50%),veh/ln	0.2	1.9	4.2	0.1	1.3	0.7
Unsig. Movement Delay, s/veh						
LnGrp Delay(d), s/veh	23.0	27.1	11.5	7.3	32.9	4.4
LnGrp LOS	C	C	B	A	C	A
Approach Vol, veh/h	158		1249			658
Approach Delay, s/veh	26.5		11.4			8.2
Approach LOS	C		B			A

Timer - Assigned Phs	1	2				6	8
Phs Duration (G+Y+Rc), s	8.6	39.2				47.8	14.8
Change Period (Y+Rc), s	4.6	6.5				6.5	5.4
Max Green Setting (Gmax), s	15.4	57.5				77.5	30.6
Max Q Clear Time (g_c+I1), s	5.1	17.8				6.1	7.1
Green Ext Time (p_c), s	0.1	14.9				5.5	0.4

Intersection Summary	
HCM 7th Control Delay, s/veh	11.6
HCM 7th LOS	B

Intersection	
Intersection Delay, s/veh	16.3
Intersection LOS	C

Movement	WBL	WBR	NBT	NBR	SBL	SBT
Lane Configurations						
Traffic Vol, veh/h	58	455	108	20	227	127
Future Vol, veh/h	58	455	108	20	227	127
Peak Hour Factor	0.95	0.95	0.95	0.95	0.95	0.95
Heavy Vehicles, %	2	2	2	2	2	2
Mvmt Flow	61	479	114	21	239	134
Number of Lanes	1	0	2	0	1	1

Approach	WB	NB	SB
Opposing Approach		SB	NB
Opposing Lanes	0	2	2
Conflicting Approach Left	NB		WB
Conflicting Lanes Left	2	0	1
Conflicting Approach Right	SB	WB	
Conflicting Lanes Right	2	1	0
HCM Control Delay, s/veh	9.8	10.1	13.4
HCM LOS	C	B	B

Lane	NBLn1	NBLn2	WBLn1	SBLn1	SBLn2
Vol Left, %	0%	0%	11%	100%	0%
Vol Thru, %	100%	64%	0%	0%	100%
Vol Right, %	0%	36%	89%	0%	0%
Sign Control	Stop	Stop	Stop	Stop	Stop
Traffic Vol by Lane	72	56	513	227	127
LT Vol	0	0	58	227	0
Through Vol	72	36	0	0	127
RT Vol	0	20	455	0	0
Lane Flow Rate	76	59	540	239	134
Geometry Grp	5	5	2	5	5
Degree of Util (X)	0.139	0.104	0.73	0.445	0.23
Departure Headway (Hd)	6.597	6.342	4.868	6.708	6.199
Convergence, Y/N	Yes	Yes	Yes	Yes	Yes
Cap	542	564	745	538	579
Service Time	4.357	4.101	2.868	4.456	3.946
HCM Lane V/C Ratio	0.14	0.105	0.725	0.444	0.231
HCM Control Delay, s/veh	10.4	9.8	19.8	14.8	10.8
HCM Lane LOS	B	A	C	B	B
HCM 95th-tile Q	0.5	0.3	6.4	2.3	0.9

Intersection	
Intersection Delay, s/veh	10.7
Intersection LOS	B

Movement	EBL	EBT	WBT	WBR	SBL	SBR
Lane Configurations						
Traffic Vol, veh/h	49	217	439	88	47	70
Future Vol, veh/h	49	217	439	88	47	70
Peak Hour Factor	0.96	0.96	0.96	0.96	0.96	0.96
Heavy Vehicles, %	2	2	2	2	2	2
Mvmt Flow	51	226	457	92	49	73
Number of Lanes	1	1	2	0	1	0

Approach	EB	WB	SB
Opposing Approach	WB	EB	
Opposing Lanes	2	2	0
Conflicting Approach Left	SB		WB
Conflicting Lanes Left	1	0	2
Conflicting Approach Right		SB	EB
Conflicting Lanes Right	0	1	2
HCM Control Delay, s/veh	10.6	11	9.6
HCM LOS	B	B	A

Lane	EBLn1	EBLn2	WBLn1	WBLn2	SBLn1
Vol Left, %	100%	0%	0%	0%	40%
Vol Thru, %	0%	100%	100%	62%	0%
Vol Right, %	0%	0%	0%	38%	60%
Sign Control	Stop	Stop	Stop	Stop	Stop
Traffic Vol by Lane	49	217	293	234	117
LT Vol	49	0	0	0	47
Through Vol	0	217	293	146	0
RT Vol	0	0	0	88	70
Lane Flow Rate	51	226	305	244	122
Geometry Grp	5	5	5	5	2
Degree of Util (X)	0.084	0.338	0.435	0.33	0.182
Departure Headway (Hd)	5.891	5.387	5.131	4.867	5.371
Convergence, Y/N	Yes	Yes	Yes	Yes	Yes
Cap	605	665	698	735	663
Service Time	3.658	3.154	2.887	2.622	3.44
HCM Lane V/C Ratio	0.084	0.34	0.437	0.332	0.184
HCM Control Delay, s/veh	9.2	10.9	11.8	10	9.6
HCM Lane LOS	A	B	B	A	A
HCM 95th-tile Q	0.3	1.5	2.2	1.4	0.7

Lane Group	WBL	WBT	WBR	NBL	NBT	SBT	SBR
Lane Configurations							
Traffic Volume (vph)	458	2	523	372	898	1354	267
Future Volume (vph)	458	2	523	372	898	1354	267
Turn Type	Split	NA	Perm	Prot	NA	NA	Perm
Protected Phases	8	8		5	2	6	
Permitted Phases			8				6
Detector Phase	8	8	8	5	2	6	6
Switch Phase							
Minimum Initial (s)	5.0	5.0	5.0	5.0	5.0	5.0	5.0
Minimum Split (s)	10.0	10.0	10.0	9.0	26.5	29.5	29.5
Total Split (s)	39.0	39.0	39.0	20.0	61.0	41.0	41.0
Total Split (%)	39.0%	39.0%	39.0%	20.0%	61.0%	41.0%	41.0%
Yellow Time (s)	4.0	4.0	4.0	3.0	4.5	4.5	4.5
All-Red Time (s)	1.0	1.0	1.0	1.0	1.0	1.0	1.0
Lost Time Adjust (s)	0.0	0.0	0.0	0.0	0.0	0.0	0.0
Total Lost Time (s)	5.0	5.0	5.0	4.0	5.5	5.5	5.5
Lead/Lag				Lead		Lag	Lag
Lead-Lag Optimize?				Yes		Yes	Yes
Recall Mode	None	None	None	None	C-Min	C-Min	C-Min
Act Effct Green (s)	26.8	26.8	26.8	14.8	62.7	44.0	44.0
Actuated g/C Ratio	0.27	0.27	0.27	0.15	0.63	0.44	0.44
v/c Ratio	0.79	0.70	0.65	0.76	0.29	0.62	0.34
Control Delay (s/veh)	46.2	30.3	25.5	38.5	21.5	24.6	8.1
Queue Delay	0.0	0.0	0.0	0.0	0.0	0.0	0.0
Total Delay (s/veh)	46.2	30.3	25.5	38.5	21.5	24.6	8.1
LOS	D	C	C	D	C	C	A
Approach Delay (s/veh)		34.3			26.5	21.9	
Approach LOS		C			C	C	

Intersection Summary	
Cycle Length: 100	
Actuated Cycle Length: 100	
Offset: 0 (0%), Referenced to phase 2:NBT and 6:SBT, Start of Yellow, Master Intersection	
Natural Cycle: 60	
Control Type: Actuated-Coordinated	
Maximum v/c Ratio: 0.79	
Intersection Signal Delay (s/veh): 26.5	Intersection LOS: C
Intersection Capacity Utilization 68.9%	ICU Level of Service C
Analysis Period (min) 15	

Splits and Phases: 1: La Sierra Av. & SR-91 WB Ramps

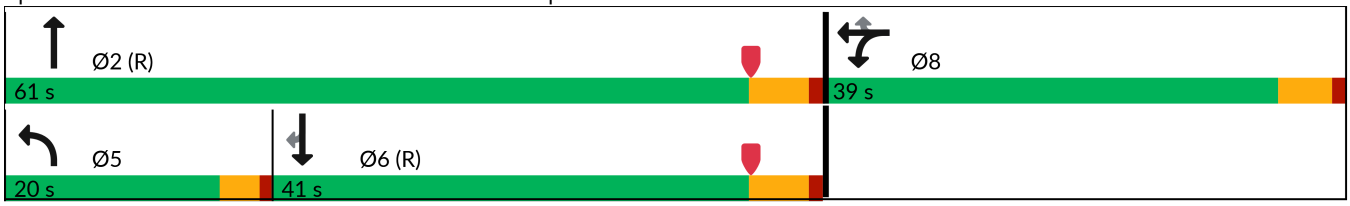

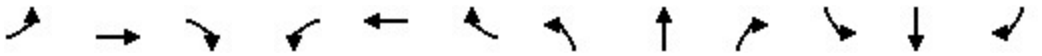

Movement	EBL	EBT	EBR	WBL	WBT	WBR	NBL	NBT	NBR	SBL	SBT	SBR
Lane Configurations												
Traffic Volume (veh/h)	0	0	0	458	2	523	372	898	0	0	1354	267
Future Volume (veh/h)	0	0	0	458	2	523	372	898	0	0	1354	267
Initial Q (Qb), veh				0	0	0	0	0	0	0	0	0
Lane Width Adj.				1.00	1.00	1.00	1.00	1.00	1.00	1.00	1.00	1.00
Ped-Bike Adj(A_pbT)				1.00		1.00	1.00		1.00	1.00		0.98
Parking Bus, Adj				1.00	1.00	1.00	1.00	1.00	1.00	1.00	1.00	1.00
Work Zone On Approach					No			No			No	
Adj Sat Flow, veh/h/ln				1870	1900	1900	1856	1885	0	0	1885	1900
Adj Flow Rate, veh/h				574	0	218	384	926	0	0	1396	189
Peak Hour Factor				0.97	0.97	0.97	0.97	0.97	0.97	0.97	0.97	0.97
Percent Heavy Veh, %				2	0	0	3	1	0	0	1	0
Cap, veh/h				692	0	313	444	3607	0	0	2734	842
Arrive On Green				0.19	0.00	0.19	0.26	1.00	0.00	0.00	0.53	0.53
Sat Flow, veh/h				3563	0	1610	3428	5316	0	0	5316	1585
Grp Volume(v), veh/h				574	0	218	384	926	0	0	1396	189
Grp Sat Flow(s),veh/h/ln				1781	0	1610	1714	1716	0	0	1716	1585
Q Serve(g_s), s				15.5	0.0	12.6	10.7	0.0	0.0	0.0	17.5	6.3
Cycle Q Clear(g_c), s				15.5	0.0	12.6	10.7	0.0	0.0	0.0	17.5	6.3
Prop In Lane				1.00		1.00	1.00		0.00	0.00		1.00
Lane Grp Cap(c), veh/h				692	0	313	444	3607	0	0	2734	842
V/C Ratio(X)				0.83	0.00	0.70	0.86	0.26	0.00	0.00	0.51	0.22
Avail Cap(c_a), veh/h				1211	0	547	549	3607	0	0	2734	842
HCM Platoon Ratio				1.00	1.00	1.00	2.00	2.00	1.00	1.00	1.00	1.00
Upstream Filter(I)				1.00	0.00	1.00	0.81	0.81	0.00	0.00	1.00	1.00
Uniform Delay (d), s/veh				38.7	0.0	37.6	36.2	0.0	0.0	0.0	15.1	12.5
Incr Delay (d2), s/veh				2.0	0.0	2.1	8.2	0.1	0.0	0.0	0.7	0.6
Initial Q Delay(d3), s/veh				0.0	0.0	0.0	0.0	0.0	0.0	0.0	0.0	0.0
%ile BackOfQ(50%),veh/ln				6.6	0.0	4.9	4.2	0.0	0.0	0.0	6.2	2.2
Unsig. Movement Delay, s/veh												
LnGrp Delay(d), s/veh				40.7	0.0	39.6	44.4	0.1	0.0	0.0	15.8	13.1
LnGrp LOS				D		D	D	A			B	B
Approach Vol, veh/h					792			1310			1585	
Approach Delay, s/veh					40.4			13.1			15.4	
Approach LOS					D			B			B	

Timer - Assigned Phs	2		5	6		8						
Phs Duration (G+Y+Rc), s	75.6		17.0	58.6		24.4						
Change Period (Y+Rc), s	5.5		4.0	5.5		5.0						
Max Green Setting (Gmax), s	55.5		16.0	35.5		34.0						
Max Q Clear Time (g_c+I1), s	2.0		12.7	19.5		17.5						
Green Ext Time (p_c), s	7.1		0.3	8.9		1.9						

Intersection Summary		
HCM 7th Control Delay, s/veh	20.0	
HCM 7th LOS	B	

Notes

User approved volume balancing among the lanes for turning movement.

Lane Group	EBL	EBT	EBR	NBT	NBR	SBL	SBT
Lane Configurations							
Traffic Volume (vph)	200	10	796	1058	289	405	1411
Future Volume (vph)	200	10	796	1058	289	405	1411
Turn Type	Split	NA	Perm	NA	Perm	Prot	NA
Protected Phases	4	4		2		1	6
Permitted Phases			4		2		
Detector Phase	4	4	4	2	2	1	6
Switch Phase							
Minimum Initial (s)	5.0	5.0	5.0	5.0	5.0	5.0	5.0
Minimum Split (s)	10.0	10.0	10.0	29.5	29.5	9.0	26.5
Total Split (s)	48.0	48.0	48.0	33.0	33.0	19.0	52.0
Total Split (%)	48.0%	48.0%	48.0%	33.0%	33.0%	19.0%	52.0%
Yellow Time (s)	4.0	4.0	4.0	4.5	4.5	3.0	4.5
All-Red Time (s)	1.0	1.0	1.0	1.0	1.0	1.0	1.0
Lost Time Adjust (s)	0.0	0.0	0.0	0.0	0.0	0.0	0.0
Total Lost Time (s)	5.0	5.0	5.0	5.5	5.5	4.0	5.5
Lead/Lag				Lag	Lag	Lead	
Lead-Lag Optimize?				Yes	Yes	Yes	
Recall Mode	None	None	None	C-Min	C-Min	None	C-Min
Act Effct Green (s)	34.5	34.5	34.5	35.4	35.4	15.6	55.0
Actuated g/C Ratio	0.35	0.35	0.35	0.35	0.35	0.16	0.55
v/c Ratio	0.32	0.83	0.75	0.60	0.40	0.77	0.51
Control Delay (s/veh)	24.1	42.6	32.0	29.9	5.2	30.0	9.7
Queue Delay	0.0	0.0	0.0	0.0	0.0	0.0	0.3
Total Delay (s/veh)	24.1	42.6	32.0	29.9	5.2	30.0	10.0
LOS	C	D	C	C	A	C	A
Approach Delay (s/veh)		34.9		24.6			14.4
Approach LOS		C		C			B

Intersection Summary	
Cycle Length: 100	
Actuated Cycle Length: 100	
Offset: 28 (28%), Referenced to phase 2:NBT and 6:SBT, Start of Yellow	
Natural Cycle: 70	
Control Type: Actuated-Coordinated	
Maximum v/c Ratio: 0.83	
Intersection Signal Delay (s/veh): 22.7	Intersection LOS: C
Intersection Capacity Utilization 68.9%	ICU Level of Service C
Analysis Period (min) 15	

Splits and Phases: 2: La Sierra Av. & SR-91 EB Ramps

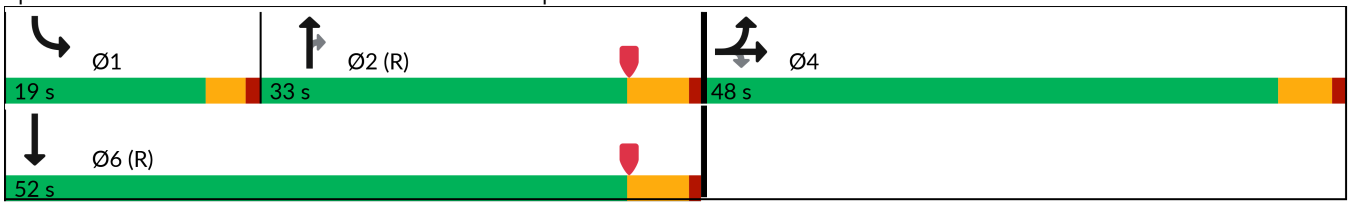

Movement	EBL	EBT	EBR	WBL	WBT	WBR	NBL	NBT	NBR	SBL	SBT	SBR
Lane Configurations												
Traffic Volume (veh/h)	200	10	796	0	0	0	0	1058	289	405	1411	0
Future Volume (veh/h)	200	10	796	0	0	0	0	1058	289	405	1411	0
Initial Q (Qb), veh	0	0	0				0	0	0	0	0	0
Lane Width Adj.	1.00	1.00	1.00				1.00	1.00	1.00	1.00	1.00	1.00
Ped-Bike Adj(A_pbT)	1.00		1.00				1.00		0.98	1.00		1.00
Parking Bus, Adj	1.00	1.00	1.00				1.00	1.00	1.00	1.00	1.00	1.00
Work Zone On Approach		No						No			No	
Adj Sat Flow, veh/h/ln	1870	1752	1856				0	1870	1885	1870	1885	0
Adj Flow Rate, veh/h	139	0	652				0	1080	157	413	1440	0
Peak Hour Factor	0.98	0.98	0.98				0.98	0.98	0.98	0.98	0.98	0.98
Percent Heavy Veh, %	2	10	3				0	2	1	2	1	0
Cap, veh/h	430	0	759				0	2418	745	485	3365	0
Arrive On Green	0.24	0.00	0.24				0.00	0.47	0.47	0.05	0.22	0.00
Sat Flow, veh/h	1781	0	3145				0	5274	1572	3456	5316	0
Grp Volume(v), veh/h	139	0	652				0	1080	157	413	1440	0
Grp Sat Flow(s),veh/h/ln	1781	0	1572				0	1702	1572	1728	1716	0
Q Serve(g_s), s	6.4	0.0	19.8				0.0	14.1	5.8	11.9	24.2	0.0
Cycle Q Clear(g_c), s	6.4	0.0	19.8				0.0	14.1	5.8	11.9	24.2	0.0
Prop In Lane	1.00		1.00				0.00		1.00	1.00		0.00
Lane Grp Cap(c), veh/h	430	0	759				0	2418	745	485	3365	0
V/C Ratio(X)	0.32	0.00	0.86				0.00	0.45	0.21	0.85	0.43	0.00
Avail Cap(c_a), veh/h	766	0	1352				0	2418	745	518	3365	0
HCM Platoon Ratio	1.00	1.00	1.00				1.00	1.00	1.00	0.33	0.33	1.00
Upstream Filter(I)	1.00	0.00	1.00				0.00	0.78	0.78	0.71	0.71	0.00
Uniform Delay (d), s/veh	31.2	0.0	36.3				0.0	17.6	15.4	46.7	23.1	0.0
Incr Delay (d2), s/veh	0.3	0.0	2.2				0.0	0.5	0.5	8.8	0.3	0.0
Initial Q Delay(d3), s/veh	0.0	0.0	0.0				0.0	0.0	0.0	0.0	0.0	0.0
%ile BackOfQ(50%),veh/ln	2.7	0.0	7.4				0.0	5.2	2.0	6.0	11.0	0.0
Unsig. Movement Delay, s/veh												
LnGrp Delay(d), s/veh	31.5	0.0	38.6				0.0	18.0	15.9	55.5	23.3	0.0
LnGrp LOS	C		D					B	B	E	C	
Approach Vol, veh/h		791						1237			1853	
Approach Delay, s/veh		37.3						17.8			30.5	
Approach LOS		D						B			C	

Timer - Assigned Phs	1	2		4		6
Phs Duration (G+Y+Rc), s	18.0	52.9		29.1		70.9
Change Period (Y+Rc), s	4.0	5.5		5.0		5.5
Max Green Setting (Gmax), s	15.0	27.5		43.0		46.5
Max Q Clear Time (g_c+I1), s	13.9	16.1		21.8		26.2
Green Ext Time (p_c), s	0.2	5.6		2.3		9.8

Intersection Summary	
HCM 7th Control Delay, s/veh	27.8
HCM 7th LOS	C

Notes

User approved volume balancing among the lanes for turning movement.

Lane Group	EBL	EBT	EBR	WBL	WBT	WBR	NBL	NBT	NBR	SBL	SBT	SBR
Lane Configurations												
Traffic Volume (vph)	369	343	366	152	189	243	214	797	109	282	1445	373
Future Volume (vph)	369	343	366	152	189	243	214	797	109	282	1445	373
Turn Type	Prot	NA	Perm	Prot	NA	Perm	Prot	NA	Perm	Prot	NA	Perm
Protected Phases	7	4		3	8		5	2		1	6	
Permitted Phases			4			8			2			6
Detector Phase	7	4	4	3	8	8	5	2	2	1	6	6
Switch Phase												
Minimum Initial (s)	5.0	10.0	10.0	5.0	10.0	10.0	5.0	10.0	10.0	5.0	10.0	10.0
Minimum Split (s)	9.6	43.4	43.4	9.6	43.4	43.4	9.6	37.8	37.8	9.6	32.8	32.8
Total Split (s)	19.0	47.0	47.0	15.4	43.4	43.4	13.3	41.2	41.2	16.4	44.3	44.3
Total Split (%)	15.8%	39.2%	39.2%	12.8%	36.2%	36.2%	11.1%	34.3%	34.3%	13.7%	36.9%	36.9%
Yellow Time (s)	3.6	4.4	4.4	3.6	4.4	4.4	3.6	4.8	4.8	3.6	4.8	4.8
All-Red Time (s)	1.0	1.0	1.0	1.0	1.0	1.0	1.0	1.0	1.0	1.0	1.0	1.0
Lost Time Adjust (s)	0.0	0.0	0.0	0.0	0.0	0.0	0.0	0.0	0.0	0.0	0.0	0.0
Total Lost Time (s)	4.6	5.4	5.4	4.6	5.4	5.4	4.6	5.8	5.8	4.6	5.8	5.8
Lead/Lag	Lead	Lag	Lag	Lead	Lag	Lag	Lead	Lag	Lag	Lead	Lag	Lag
Lead-Lag Optimize?	Yes	Yes	Yes	Yes	Yes	Yes	Yes	Yes	Yes	Yes	Yes	Yes
Recall Mode	None	None	None	None	None	None	None	Min	Min	None	Min	Min
Act Effct Green (s)	14.5	24.6	24.6	8.9	18.9	18.9	8.8	36.0	36.0	11.7	38.9	38.9
Actuated g/C Ratio	0.14	0.24	0.24	0.09	0.19	0.19	0.09	0.35	0.35	0.12	0.38	0.38
v/c Ratio	0.82	0.44	0.77	0.55	0.31	0.60	0.79	0.48	0.19	0.78	0.81	0.48
Control Delay (s/veh)	58.3	33.8	28.1	53.4	35.7	16.9	66.5	28.2	6.2	59.9	33.6	4.9
Queue Delay	0.0	0.0	0.0	0.0	0.0	0.0	0.0	0.0	0.0	0.0	0.0	0.0
Total Delay (s/veh)	58.3	33.8	28.1	53.4	35.7	16.9	66.5	28.2	6.2	59.9	33.6	4.9
LOS	E	C	C	D	D	B	E	C	A	E	C	A
Approach Delay (s/veh)		40.3			32.5			33.4			32.0	
Approach LOS		D			C			C			C	

Intersection Summary	
Cycle Length: 120	
Actuated Cycle Length: 101.7	
Natural Cycle: 115	
Control Type: Actuated-Uncoordinated	
Maximum v/c Ratio: 0.82	
Intersection Signal Delay (s/veh): 34.2	Intersection LOS: C
Intersection Capacity Utilization 72.1%	ICU Level of Service C
Analysis Period (min) 15	

Splits and Phases: 3: La Sierra Av. & Indiana Av./S. Indiana Av.

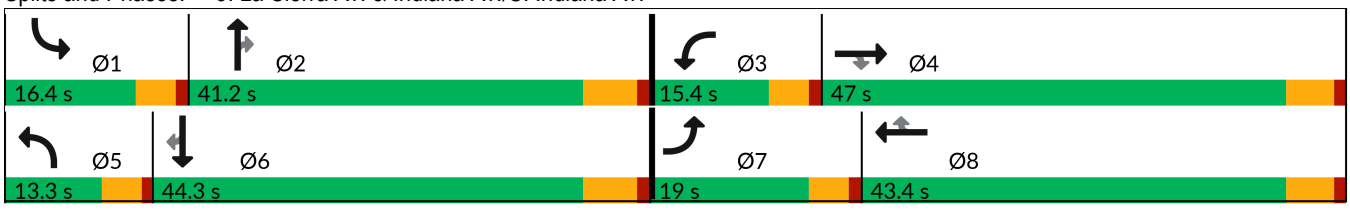

Movement	EBL	EBT	EBR	WBL	WBT	WBR	NBL	NBT	NBR	SBL	SBT	SBR
Lane Configurations												
Traffic Volume (veh/h)	369	343	366	152	189	243	214	797	109	282	1445	373
Future Volume (veh/h)	369	343	366	152	189	243	214	797	109	282	1445	373
Initial Q (Qb), veh	0	0	0	0	0	0	0	0	0	0	0	0
Lane Width Adj.	1.00	1.00	1.00	1.00	1.00	1.00	1.00	1.00	1.00	1.00	1.00	1.00
Ped-Bike Adj(A_pbT)	1.00		0.98	1.00		0.98	1.00		0.99	1.00		0.98
Parking Bus, Adj	1.00	1.00	1.00	1.00	1.00	1.00	1.00	1.00	1.00	1.00	1.00	1.00
Work Zone On Approach		No			No			No			No	
Adj Sat Flow, veh/h/ln	1870	1870	1870	1870	1870	1870	1870	1870	1870	1870	1870	1870
Adj Flow Rate, veh/h	401	373	312	165	205	205	233	866	64	307	1571	307
Peak Hour Factor	0.92	0.92	0.92	0.92	0.92	0.92	0.92	0.92	0.92	0.92	0.92	0.92
Percent Heavy Veh, %	2	2	2	2	2	2	2	2	2	2	2	2
Cap, veh/h	467	937	408	233	696	305	298	1807	558	374	1918	582
Arrive On Green	0.14	0.26	0.26	0.07	0.20	0.20	0.09	0.35	0.35	0.11	0.38	0.38
Sat Flow, veh/h	3456	3554	1549	3456	3554	1557	3456	5106	1577	3456	5106	1548
Grp Volume(v), veh/h	401	373	312	165	205	205	233	866	64	307	1571	307
Grp Sat Flow(s),veh/h/ln	1728	1777	1549	1728	1777	1557	1728	1702	1577	1728	1702	1548
Q Serve(g_s), s	11.2	8.5	18.3	4.6	4.9	12.0	6.5	13.0	2.7	8.6	27.3	15.2
Cycle Q Clear(g_c), s	11.2	8.5	18.3	4.6	4.9	12.0	6.5	13.0	2.7	8.6	27.3	15.2
Prop In Lane	1.00		1.00	1.00		1.00	1.00		1.00	1.00		1.00
Lane Grp Cap(c), veh/h	467	937	408	233	696	305	298	1807	558	374	1918	582
V/C Ratio(X)	0.86	0.40	0.76	0.71	0.29	0.67	0.78	0.48	0.11	0.82	0.82	0.53
Avail Cap(c_a), veh/h	505	1500	654	379	1371	601	305	1835	567	414	1995	605
HCM Platoon Ratio	1.00	1.00	1.00	1.00	1.00	1.00	1.00	1.00	1.00	1.00	1.00	1.00
Upstream Filter(I)	1.00	1.00	1.00	1.00	1.00	1.00	1.00	1.00	1.00	1.00	1.00	1.00
Uniform Delay (d), s/veh	41.7	29.8	33.4	45.0	33.8	36.7	44.1	24.8	21.4	43.0	27.7	24.0
Incr Delay (d2), s/veh	12.2	0.3	3.0	1.5	0.2	2.6	11.0	0.3	0.1	10.3	2.9	1.1
Initial Q Delay(d3), s/veh	0.0	0.0	0.0	0.0	0.0	0.0	0.0	0.0	0.0	0.0	0.0	0.0
%ile BackOfQ(50%),veh/ln	5.4	3.5	6.9	2.0	2.1	4.6	3.1	4.9	1.0	4.0	10.7	5.4
Unsig. Movement Delay, s/veh												
LnGrp Delay(d), s/veh	53.9	30.1	36.5	46.5	34.0	39.3	55.1	25.0	21.6	53.3	30.6	25.0
LnGrp LOS	D	C	D	D	C	D	E	C	C	D	C	C
Approach Vol, veh/h		1086			575			1163			2185	
Approach Delay, s/veh		40.7			39.5			30.9			33.0	
Approach LOS		D			D			C			C	

Timer - Assigned Phs	1	2	3	4	5	6	7	8
Phs Duration (G+Y+Rc), s	15.3	40.7	11.2	31.4	13.1	42.8	17.9	24.7
Change Period (Y+Rc), s	4.6	5.8	4.6	5.4	4.6	5.8	4.6	5.4
Max Green Setting (Gmax), s	11.8	35.4	10.8	41.6	8.7	38.5	14.4	38.0
Max Q Clear Time (g_c+I1), s	10.6	15.0	6.6	20.3	8.5	29.3	13.2	14.0
Green Ext Time (p_c), s	0.1	7.8	0.1	3.4	0.0	7.7	0.1	1.9

Intersection Summary	
HCM 7th Control Delay, s/veh	34.9
HCM 7th LOS	C

Lane Group	EBL	EBT	EBR	WBL	WBT	WBR	NBL	NBT	SBL	SBT
Lane Configurations										
Traffic Volume (vph)	58	104	147	260	75	172	27	703	189	1381
Future Volume (vph)	58	104	147	260	75	172	27	703	189	1381
Turn Type	Prot	NA	Perm	Prot	NA	Perm	Prot	NA	Prot	NA
Protected Phases	7	4		3	8		5	2	1	6
Permitted Phases			4			8				
Detector Phase	7	4	4	3	8	8	5	2	1	6
Switch Phase										
Minimum Initial (s)	5.0	10.0	10.0	5.0	10.0	10.0	5.0	10.0	5.0	10.0
Minimum Split (s)	9.6	34.1	34.1	9.6	33.8	33.8	9.6	35.8	9.6	33.8
Total Split (s)	10.1	34.1	34.1	22.0	46.0	46.0	9.6	44.5	19.4	54.3
Total Split (%)	8.4%	28.4%	28.4%	18.3%	38.3%	38.3%	8.0%	37.1%	16.2%	45.3%
Yellow Time (s)	3.6	4.1	4.1	3.6	4.8	4.8	3.6	4.8	3.6	4.8
All-Red Time (s)	1.0	1.0	1.0	1.0	1.0	1.0	1.0	1.0	1.0	1.0
Lost Time Adjust (s)	0.0	0.0	0.0	0.0	0.0	0.0	0.0	0.0	0.0	0.0
Total Lost Time (s)	4.6	5.1	5.1	4.6	5.8	5.8	4.6	5.8	4.6	5.8
Lead/Lag	Lead	Lag	Lag	Lead	Lag	Lag	Lead	Lag	Lead	Lag
Lead-Lag Optimize?	Yes	Yes	Yes	Yes	Yes	Yes	Yes	Yes	Yes	Yes
Recall Mode	None	None	None	None	None	None	None	Min	None	Min
Act Effct Green (s)	5.4	14.2	14.2	17.6	27.8	27.8	5.1	35.3	14.4	49.0
Actuated g/C Ratio	0.05	0.14	0.14	0.17	0.27	0.27	0.05	0.35	0.14	0.48
v/c Ratio	0.34	0.43	0.41	0.91	0.16	0.33	0.33	0.73	0.80	0.91
Control Delay (s/veh)	55.1	45.5	5.7	76.8	30.9	6.1	61.4	33.3	68.1	35.0
Queue Delay	0.0	0.0	0.0	0.0	0.0	0.0	0.0	0.0	0.0	0.0
Total Delay (s/veh)	55.1	45.5	5.7	76.8	30.9	6.1	61.4	33.3	68.1	35.0
LOS	E	D	A	E	C	A	E	C	E	D
Approach Delay (s/veh)		28.4			46.0			34.2		38.8
Approach LOS		C			D			C		D

Intersection Summary	
Cycle Length: 120	
Actuated Cycle Length: 101.9	
Natural Cycle: 120	
Control Type: Actuated-Uncoordinated	
Maximum v/c Ratio: 0.91	
Intersection Signal Delay (s/veh): 37.8	Intersection LOS: D
Intersection Capacity Utilization 78.9%	ICU Level of Service D
Analysis Period (min) 15	

Splits and Phases: 4: La Sierra Av. & Victoria Av.

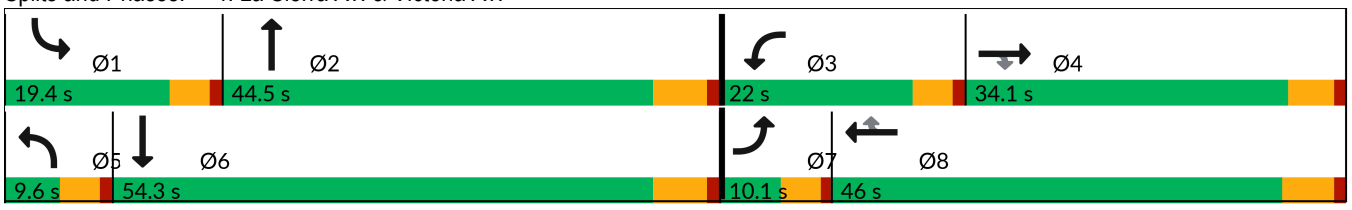

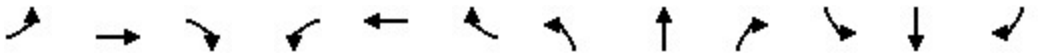

Movement	EBL	EBT	EBR	WBL	WBT	WBR	NBL	NBT	NBR	SBL	SBT	SBR
Lane Configurations												
Traffic Volume (veh/h)	58	104	147	260	75	172	27	703	125	189	1381	63
Future Volume (veh/h)	58	104	147	260	75	172	27	703	125	189	1381	63
Initial Q (Qb), veh	0	0	0	0	0	0	0	0	0	0	0	0
Lane Width Adj.	1.00	1.00	1.00	1.00	1.00	1.00	1.00	1.00	1.00	1.00	1.00	1.00
Ped-Bike Adj(A_pbT)	1.00		0.98	1.00		0.99	1.00		1.00	1.00		1.00
Parking Bus, Adj	1.00	1.00	1.00	1.00	1.00	1.00	1.00	1.00	1.00	1.00	1.00	1.00
Work Zone On Approach		No			No			No			No	
Adj Sat Flow, veh/h/ln	1870	1870	1870	1870	1870	1870	1870	1870	1870	1870	1870	1870
Adj Flow Rate, veh/h	62	111	117	277	80	112	29	748	93	201	1469	45
Peak Hour Factor	0.94	0.94	0.94	0.94	0.94	0.94	0.94	0.94	0.94	0.94	0.94	0.94
Percent Heavy Veh, %	2	2	2	2	2	2	2	2	2	2	2	2
Cap, veh/h	145	195	162	309	440	368	50	1193	148	234	1684	51
Arrive On Green	0.04	0.10	0.10	0.17	0.24	0.24	0.03	0.38	0.38	0.13	0.48	0.48
Sat Flow, veh/h	3456	1870	1559	1781	1870	1563	1781	3181	395	1781	3520	108
Grp Volume(v), veh/h	62	111	117	277	80	112	29	418	423	201	740	774
Grp Sat Flow(s),veh/h/ln	1728	1870	1559	1781	1870	1563	1781	1777	1799	1781	1777	1851
Q Serve(g_s), s	1.7	5.4	7.0	14.6	3.3	5.7	1.5	18.5	18.5	10.6	35.8	36.0
Cycle Q Clear(g_c), s	1.7	5.4	7.0	14.6	3.3	5.7	1.5	18.5	18.5	10.6	35.8	36.0
Prop In Lane	1.00		1.00	1.00		1.00	1.00		0.22	1.00		0.06
Lane Grp Cap(c), veh/h	145	195	162	309	440	368	50	666	675	234	850	885
V/C Ratio(X)	0.43	0.57	0.72	0.90	0.18	0.30	0.58	0.63	0.63	0.86	0.87	0.87
Avail Cap(c_a), veh/h	198	564	470	322	782	654	93	715	724	274	896	934
HCM Platoon Ratio	1.00	1.00	1.00	1.00	1.00	1.00	1.00	1.00	1.00	1.00	1.00	1.00
Upstream Filter(I)	1.00	1.00	1.00	1.00	1.00	1.00	1.00	1.00	1.00	1.00	1.00	1.00
Uniform Delay (d), s/veh	44.9	41.0	41.7	38.9	29.4	30.3	46.2	24.5	24.6	40.9	22.4	22.5
Incr Delay (d2), s/veh	0.7	2.6	5.9	24.6	0.2	0.5	3.9	1.9	1.9	18.5	9.4	9.2
Initial Q Delay(d3), s/veh	0.0	0.0	0.0	0.0	0.0	0.0	0.0	0.0	0.0	0.0	0.0	0.0
%ile BackOfQ(50%),veh/ln	0.7	2.6	2.8	8.2	1.4	2.1	0.7	7.5	7.6	5.7	15.4	16.0
Unsig. Movement Delay, s/veh												
LnGrp Delay(d), s/veh	45.7	43.6	47.6	63.5	29.6	30.7	50.1	26.5	26.4	59.4	31.8	31.7
LnGrp LOS	D	D	D	E	C	C	D	C	C	E	C	C
Approach Vol, veh/h		290			469			870			1715	
Approach Delay, s/veh		45.7			49.9			27.2			35.0	
Approach LOS		D			D			C			C	

Timer - Assigned Phs	1	2	3	4	5	6	7	8
Phs Duration (G+Y+Rc), s	17.2	41.9	21.3	15.8	7.3	51.8	8.6	28.4
Change Period (Y+Rc), s	4.6	5.8	4.6	* 5.8	4.6	5.8	4.6	5.8
Max Green Setting (Gmax), s	14.8	38.7	17.4	* 29	5.0	48.5	5.5	40.2
Max Q Clear Time (g_c+I1), s	12.6	20.5	16.6	9.0	3.5	38.0	3.7	7.7
Green Ext Time (p_c), s	0.1	6.5	0.0	0.9	0.0	8.0	0.0	0.7

Intersection Summary	
HCM 7th Control Delay, s/veh	36.0
HCM 7th LOS	D

Notes

* HCM 7th computational engine requires equal clearance times for the phases crossing the barrier.

Lane Group	WBL	WBR	NBT	NBR	SBL	SBT
Lane Configurations						
Traffic Volume (vph)	8	150	706	12	271	1487
Future Volume (vph)	8	150	706	12	271	1487
Turn Type	Prot	Perm	NA	Perm	Prot	NA
Protected Phases	8		2		1	6
Permitted Phases		8		2		
Detector Phase	8	8	2	2	1	6
Switch Phase						
Minimum Initial (s)	10.0	10.0	10.0	10.0	5.0	10.0
Minimum Split (s)	33.4	33.4	27.5	27.5	9.6	16.5
Total Split (s)	35.0	35.0	47.0	47.0	38.0	85.0
Total Split (%)	29.2%	29.2%	39.2%	39.2%	31.7%	70.8%
Yellow Time (s)	4.4	4.4	5.5	5.5	3.6	5.5
All-Red Time (s)	1.0	1.0	1.0	1.0	1.0	1.0
Lost Time Adjust (s)	0.0	0.0	0.0	0.0	0.0	0.0
Total Lost Time (s)	5.4	5.4	6.5	6.5	4.6	6.5
Lead/Lag			Lag	Lag	Lead	
Lead-Lag Optimize?			Yes	Yes	Yes	
Recall Mode	None	None	Min	Min	None	Min
Act Effct Green (s)	13.0	13.0	24.3	24.3	17.4	46.7
Actuated g/C Ratio	0.18	0.18	0.34	0.34	0.24	0.64
v/c Ratio	0.03	0.38	0.63	0.02	0.68	0.69
Control Delay (s/veh)	29.8	8.6	24.2	10.9	35.7	10.4
Queue Delay	0.0	0.0	0.0	0.0	0.0	0.0
Total Delay (s/veh)	29.8	8.6	24.2	10.9	35.7	10.4
LOS	C	A	C	B	D	B
Approach Delay (s/veh)	9.8		23.9			14.3
Approach LOS	A		C			B

Intersection Summary	
Cycle Length: 120	
Actuated Cycle Length: 72.5	
Natural Cycle: 80	
Control Type: Actuated-Uncoordinated	
Maximum v/c Ratio: 0.69	
Intersection Signal Delay (s/veh): 16.7	Intersection LOS: B
Intersection Capacity Utilization 59.4%	ICU Level of Service B
Analysis Period (min) 15	

Splits and Phases: 5: La Sierra Av. & McAllister Pkwy.

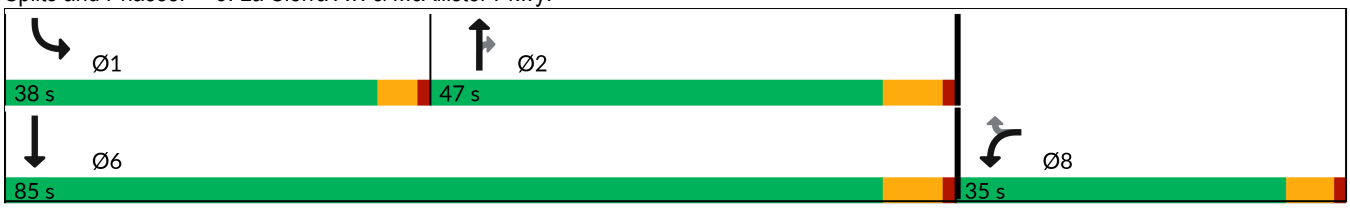



Movement	WBL	WBR	NBT	NBR	SBL	SBT
Lane Configurations						
Traffic Volume (veh/h)	8	150	706	12	271	1487
Future Volume (veh/h)	8	150	706	12	271	1487
Initial Q (Qb), veh	0	0	0	0	0	0
Lane Width Adj.	1.00	1.00	1.00	1.00	1.00	1.00
Ped-Bike Adj(A_pbT)	1.00	1.00		0.98	1.00	
Parking Bus, Adj	1.00	1.00	1.00	1.00	1.00	1.00
Work Zone On Approach	No		No			No
Adj Sat Flow, veh/h/ln	1870	1870	1870	1870	1870	1870
Adj Flow Rate, veh/h	9	54	751	13	288	1582
Peak Hour Factor	0.94	0.94	0.94	0.94	0.94	0.94
Percent Heavy Veh, %	2	2	2	2	2	2
Cap, veh/h	191	170	1531	668	343	2482
Arrive On Green	0.11	0.11	0.43	0.43	0.19	0.70
Sat Flow, veh/h	1781	1585	3647	1552	1781	3647
Grp Volume(v), veh/h	9	54	751	13	288	1582
Grp Sat Flow(s),veh/h/ln	1781	1585	1777	1552	1781	1777
Q Serve(g_s), s	0.3	1.9	9.3	0.3	9.5	14.8
Cycle Q Clear(g_c), s	0.3	1.9	9.3	0.3	9.5	14.8
Prop In Lane	1.00	1.00		1.00	1.00	
Lane Grp Cap(c), veh/h	191	170	1531	668	343	2482
V/C Ratio(X)	0.05	0.32	0.49	0.02	0.84	0.64
Avail Cap(c_a), veh/h	861	766	2350	1026	971	4554
HCM Platoon Ratio	1.00	1.00	1.00	1.00	1.00	1.00
Upstream Filter(I)	1.00	1.00	1.00	1.00	1.00	1.00
Uniform Delay (d), s/veh	24.5	25.3	12.6	10.0	23.8	5.0
Incr Delay (d2), s/veh	0.1	1.1	0.3	0.0	2.1	0.4
Initial Q Delay(d3), s/veh	0.0	0.0	0.0	0.0	0.0	0.0
%ile BackOfQ(50%),veh/ln	0.1	0.7	2.8	0.1	3.5	1.7
Unsig. Movement Delay, s/veh						
LnGrp Delay(d), s/veh	24.6	26.3	12.9	10.0	26.0	5.4
LnGrp LOS	C	C	B	B	C	A
Approach Vol, veh/h	63		764			1870
Approach Delay, s/veh	26.1		12.9			8.6
Approach LOS	C		B			A

Timer - Assigned Phs	1	2				6	8
Phs Duration (G+Y+Rc), s	16.4	32.9				49.3	12.0
Change Period (Y+Rc), s	4.6	6.5				6.5	5.4
Max Green Setting (Gmax), s	33.4	40.5				78.5	29.6
Max Q Clear Time (g_c+I1), s	11.5	11.3				16.8	3.9
Green Ext Time (p_c), s	0.3	7.1				26.0	0.1

Intersection Summary	
HCM 7th Control Delay, s/veh	10.2
HCM 7th LOS	B

Intersection	
Intersection Delay, s/veh	75.3
Intersection LOS	F

Movement	WBL	WBR	NBT	NBR	SBL	SBT
Lane Configurations						
Traffic Vol, veh/h	72	303	221	83	616	474
Future Vol, veh/h	72	303	221	83	616	474
Peak Hour Factor	0.93	0.93	0.93	0.93	0.93	0.93
Heavy Vehicles, %	2	2	2	2	2	2
Mvmt Flow	77	326	238	89	662	510
Number of Lanes	1	0	2	0	1	1

Approach	WB	NB	SB
Opposing Approach		SB	NB
Opposing Lanes	0	2	2
Conflicting Approach Left	NB		WB
Conflicting Lanes Left	2	0	1
Conflicting Approach Right	SB	WB	
Conflicting Lanes Right	2	1	0
HCM Control Delay, s/veh	20.4	13.4	111.4
HCM LOS	C	B	F

Lane	NBLn1	NBLn2	WBLn1	SBLn1	SBLn2
Vol Left, %	0%	0%	19%	100%	0%
Vol Thru, %	100%	47%	0%	0%	100%
Vol Right, %	0%	53%	81%	0%	0%
Sign Control	Stop	Stop	Stop	Stop	Stop
Traffic Vol by Lane	147	157	375	616	474
LT Vol	0	0	72	616	0
Through Vol	147	74	0	0	474
RT Vol	0	83	303	0	0
Lane Flow Rate	158	168	403	662	510
Geometry Grp	5	5	2	5	5
Degree of Util (X)	0.319	0.322	0.664	1.281	0.914
Departure Headway (Hd)	7.538	7.157	6.128	6.964	6.453
Convergence, Y/N	Yes	Yes	Yes	Yes	Yes
Cap	480	505	593	523	566
Service Time	5.238	4.857	4.128	4.679	4.168
HCM Lane V/C Ratio	0.329	0.333	0.68	1.266	0.901
HCM Control Delay, s/veh	13.7	13.2	20.4	162.5	44.9
HCM Lane LOS	B	B	C	F	E
HCM 95th-tile Q	1.4	1.4	4.9	27.2	11.1

Intersection	
Intersection Delay, s/veh	39.4
Intersection LOS	E

Movement	EBL	EBT	WBT	WBR	SBL	SBR
Lane Configurations						
Traffic Vol, veh/h	60	640	283	28	32	105
Future Vol, veh/h	60	640	283	28	32	105
Peak Hour Factor	0.94	0.94	0.94	0.94	0.94	0.94
Heavy Vehicles, %	2	2	2	2	2	2
Mvmt Flow	64	681	301	30	34	112
Number of Lanes	1	1	2	0	1	0

Approach	EB	WB	SB
Opposing Approach	WB	EB	
Opposing Lanes	2	2	0
Conflicting Approach Left	SB		WB
Conflicting Lanes Left	1	0	2
Conflicting Approach Right		SB	EB
Conflicting Lanes Right	0	1	2
HCM Control Delay, s/veh	57.8	10.6	10.9
HCM LOS	F	B	B

Lane	EBLn1	EBLn2	WBLn1	WBLn2	SBLn1
Vol Left, %	100%	0%	0%	0%	23%
Vol Thru, %	0%	100%	100%	77%	0%
Vol Right, %	0%	0%	0%	23%	77%
Sign Control	Stop	Stop	Stop	Stop	Stop
Traffic Vol by Lane	60	640	189	122	137
LT Vol	60	0	0	0	32
Through Vol	0	640	189	94	0
RT Vol	0	0	0	28	105
Lane Flow Rate	64	681	201	130	146
Geometry Grp	5	5	5	5	2
Degree of Util (X)	0.105	1.019	0.317	0.2	0.238
Departure Headway (Hd)	5.894	5.389	5.827	5.664	6.041
Convergence, Y/N	Yes	Yes	Yes	Yes	Yes
Cap	611	681	620	638	598
Service Time	3.594	3.089	3.527	3.364	4.041
HCM Lane V/C Ratio	0.105	1	0.324	0.204	0.244
HCM Control Delay, s/veh	9.3	62.3	11.2	9.8	10.9
HCM Lane LOS	A	F	B	A	B
HCM 95th-tile Q	0.4	16.8	1.4	0.7	0.9

APPENDIX 3.3: EXISTING (2024) CONDITIONS TRAFFIC SIGNAL WARRANT ANALYSIS WORKSHEETS

This Page Intentionally Left Blank

Figure 4C-4. Warrant 3, Peak Hour (70% Factor)

(COMMUNITY LESS THAN 10,000 POPULATION OR ABOVE 64 km/h OR ABOVE 40 mph ON MAJOR STREET)

Traffic Conditions = **Existing (2024) Conditions - Weekday PM Peak Hour**

Major Street Name = **La Sierra Av.** Total of Both Approaches (VPH) = **1394**
Number of Approach Lanes Major Street = **1**

Minor Street Name = **El Sobrante Rd.** High Volume Approach (VPH) = **375**
Number of Approach Lanes Minor Street = **1**

WARRANTED FOR A SIGNAL

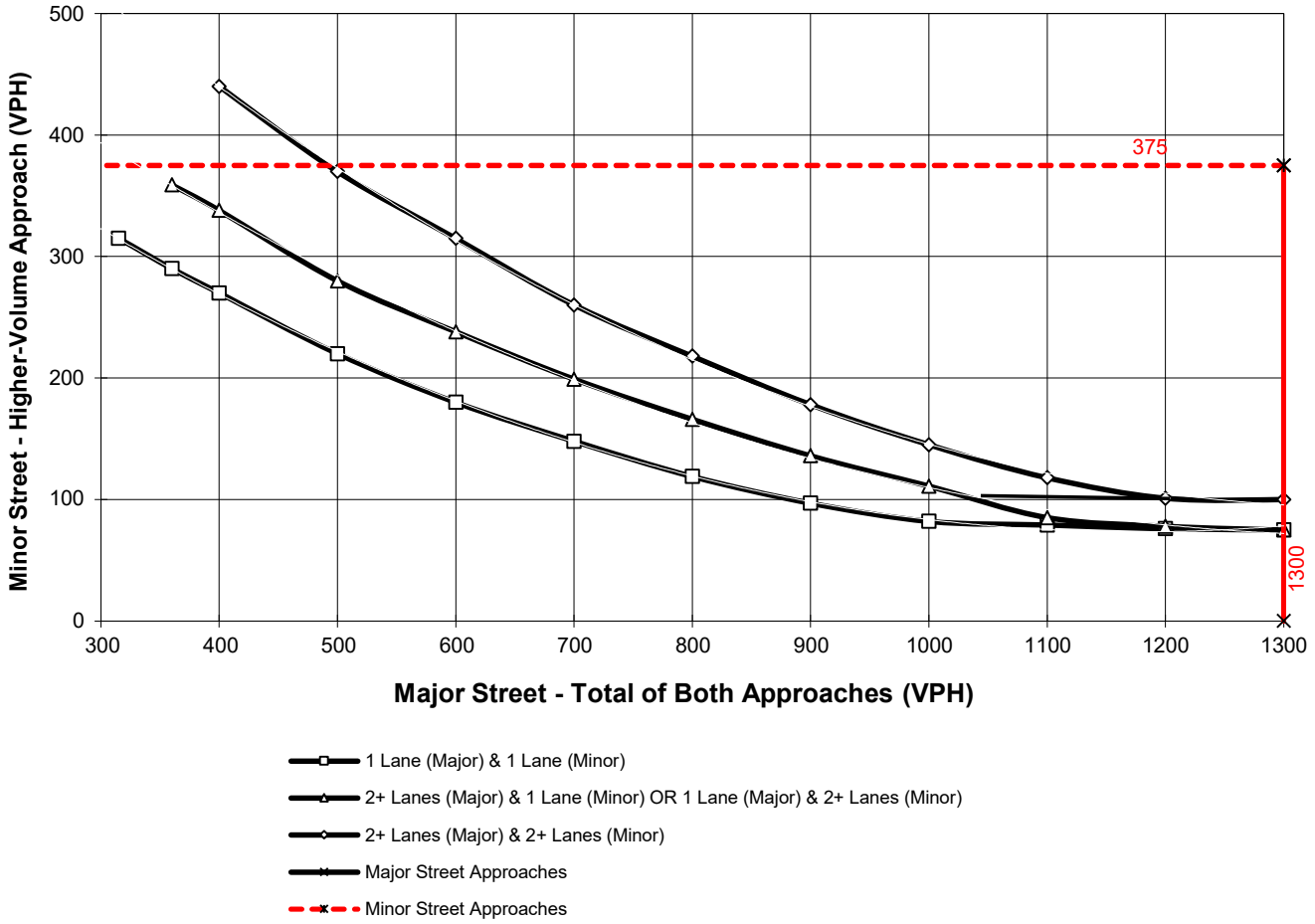

*Note: 100 vph applies as the lower threshold for a minor-street approach with two or more lanes and 75 vph applies as the lower threshold for a minor-street approach with one lane

Figure 4C-4. Warrant 3, Peak Hour (70% Factor)

(COMMUNITY LESS THAN 10,000 POPULATION OR ABOVE 64 km/h OR ABOVE 40 mph ON MAJOR STREET)

Traffic Conditions = **Existing (2024) Conditions - Weekday PM Peak Hour**

Major Street Name = **El Sobrante Rd.** Total of Both Approaches (VPH) = **1011**
Number of Approach Lanes Major Street = **1**

Minor Street Name = **McAllister St.** High Volume Approach (VPH) = **137**
Number of Approach Lanes Minor Street = **1**

WARRANTED FOR A SIGNAL

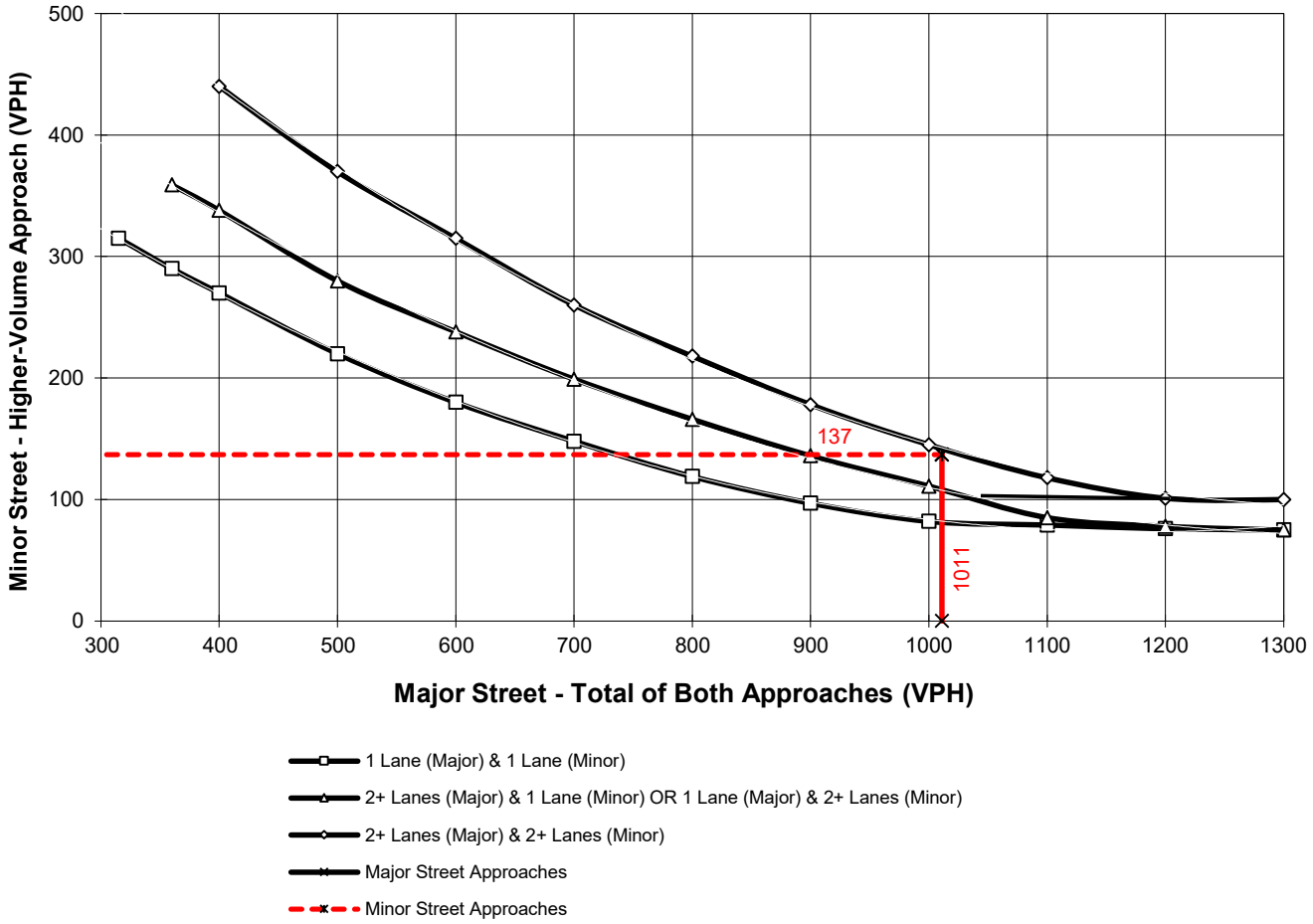

*Note: 100 vph applies as the lower threshold for a minor-street approach with two or more lanes and 75 vph applies as the lower threshold for a minor-street approach with one lane

APPENDIX 3.4: EXISTING (2024) CONDITIONS QUEUING ANALYSIS WORKSHEETS

This Page Intentionally Left Blank



Lane Group	WBL	WBT	WBR	NBL	NBT	SBT	SBR
Lane Group Flow (vph)	256	251	252	630	1343	953	137
v/c Ratio	0.73	0.68	0.67	0.82	0.39	0.45	0.19
Control Delay (s/veh)	48.0	34.5	33.5	42.0	13.5	23.8	6.2
Queue Delay	0.0	0.0	0.0	0.0	0.3	0.0	0.0
Total Delay (s/veh)	48.0	34.5	33.5	42.0	13.8	23.8	6.2
Queue Length 50th (ft)	161	116	111	221	165	156	3
Queue Length 95th (ft)	226	187	180	271	313	245	49
Internal Link Dist (ft)		1180			412	935	
Turn Bay Length (ft)	500		500	155			140
Base Capacity (vph)	532	519	534	904	3473	2103	704
Starvation Cap Reductn	0	0	0	0	1339	0	0
Spillback Cap Reductn	0	0	0	0	0	0	0
Storage Cap Reductn	0	0	0	0	0	0	0
Reduced v/c Ratio	0.48	0.48	0.47	0.70	0.63	0.45	0.19

Intersection Summary



Lane Group	EBL	EBT	EBR	NBT	NBR	SBL	SBT
Lane Group Flow (vph)	295	283	266	1517	474	315	932
v/c Ratio	0.75	0.72	0.62	0.62	0.48	0.70	0.28
Control Delay (s/veh)	46.7	37.2	23.2	21.5	3.7	48.8	1.8
Queue Delay	0.0	0.0	0.0	0.0	0.0	0.0	0.0
Total Delay (s/veh)	46.7	37.2	23.2	21.5	3.7	48.8	1.8
Queue Length 50th (ft)	185	145	83	252	0	30	2
Queue Length 95th (ft)	252	218	153	359	61	120	29
Internal Link Dist (ft)		1416		886			412
Turn Bay Length (ft)			450		415	155	
Base Capacity (vph)	543	520	547	2463	997	483	3333
Starvation Cap Reductn	0	0	0	0	0	0	0
Spillback Cap Reductn	0	0	0	0	0	0	0
Storage Cap Reductn	0	0	0	0	0	0	0
Reduced v/c Ratio	0.54	0.54	0.49	0.62	0.48	0.65	0.28

Intersection Summary

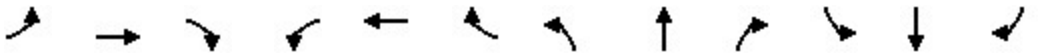

Lane Group	EBL	EBT	EBR	WBL	WBT	WBR	NBL	NBT	NBR	SBL	SBT	SBR
Lane Group Flow (vph)	478	220	152	102	231	276	359	1507	162	135	982	480
v/c Ratio	0.79	0.23	0.28	0.43	0.40	0.66	0.76	0.76	0.23	0.67	0.62	0.59
Control Delay (s/veh)	50.3	27.5	5.4	52.2	37.7	19.8	53.9	30.6	5.1	64.2	32.4	6.5
Queue Delay	0.0	0.0	0.0	0.0	0.0	0.0	0.0	0.0	0.0	0.0	0.0	0.0
Total Delay (s/veh)	50.3	27.5	5.4	52.2	37.7	19.8	53.9	30.6	5.1	64.2	32.4	6.5
Queue Length 50th (ft)	138	56	0	30	68	46	106	268	0	41	176	0
Queue Length 95th (ft)	#294	84	41	70	101	122	#234	#508	49	#111	312	91
Internal Link Dist (ft)		2549			2428			2703			886	
Turn Bay Length (ft)	205		205	205		130	200		305	355		535
Base Capacity (vph)	628	1768	857	262	1391	730	483	2009	715	202	1594	813
Starvation Cap Reductn	0	0	0	0	0	0	0	0	0	0	0	0
Spillback Cap Reductn	0	0	0	0	0	0	0	0	0	0	0	0
Storage Cap Reductn	0	0	0	0	0	0	0	0	0	0	0	0
Reduced v/c Ratio	0.76	0.12	0.18	0.39	0.17	0.38	0.74	0.75	0.23	0.67	0.62	0.59

Intersection Summary

95th percentile volume exceeds capacity, queue may be longer.
Queue shown is maximum after two cycles.

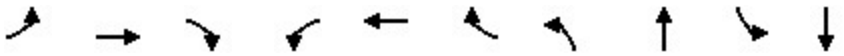

Lane Group	EBL	EBT	EBR	WBL	WBT	WBR	NBL	NBT	SBL	SBT
Lane Group Flow (vph)	52	87	63	74	104	227	46	1351	119	611
v/c Ratio	0.26	0.32	0.20	0.56	0.36	0.57	0.35	0.80	0.65	0.31
Control Delay (s/veh)	52.8	42.8	2.5	64.6	42.2	15.3	55.3	26.0	62.6	13.7
Queue Delay	0.0	0.0	0.0	0.0	0.0	0.0	0.0	0.0	0.0	0.0
Total Delay (s/veh)	52.8	42.8	2.5	64.6	42.2	15.3	55.3	26.0	62.6	13.7
Queue Length 50th (ft)	15	51	0	45	61	22	28	333	72	103
Queue Length 95th (ft)	41	98	7	#129	111	89	73	578	#187	202
Internal Link Dist (ft)		810			1637			2644		1335
Turn Bay Length (ft)	130			205		200	215		210	
Base Capacity (vph)	200	598	575	144	626	647	171	2030	203	2150
Starvation Cap Reductn	0	0	0	0	0	0	0	0	0	0
Spillback Cap Reductn	0	0	0	0	0	0	0	0	0	0
Storage Cap Reductn	0	0	0	0	0	0	0	0	0	0
Reduced v/c Ratio	0.26	0.15	0.11	0.51	0.17	0.35	0.27	0.67	0.59	0.28

Intersection Summary

95th percentile volume exceeds capacity, queue may be longer.
Queue shown is maximum after two cycles.



Lane Group	WBL	WBR	NBT	NBR	SBL	SBT
Lane Group Flow (vph)	20	256	1227	25	89	569
v/c Ratio	0.06	0.52	0.71	0.03	0.41	0.25
Control Delay (s/veh)	31.5	8.7	18.2	6.6	41.9	5.8
Queue Delay	0.0	0.0	0.0	0.0	0.0	0.0
Total Delay (s/veh)	31.5	8.7	18.2	6.6	41.9	5.8
Queue Length 50th (ft)	7	0	198	1	36	39
Queue Length 95th (ft)	32	62	436	16	114	107
Internal Link Dist (ft)	3339		1159			2644
Turn Bay Length (ft)	150			200	300	
Base Capacity (vph)	820	871	2815	1263	412	3302
Starvation Cap Reductn	0	0	0	0	0	0
Spillback Cap Reductn	0	0	0	0	0	0
Storage Cap Reductn	0	0	0	0	0	0
Reduced v/c Ratio	0.02	0.29	0.44	0.02	0.22	0.17

Intersection Summary

Intersection: 1: La Sierra Av. & SR-91 WB Ramps

Movement	WB	WB	WB	NB	NB	NB	NB	NB	SB	SB	SB	SB
Directions Served	L	LTR	R	L	L	T	T	T	T	T	T	R
Maximum Queue (ft)	238	307	268	244	357	285	269	260	458	402	184	123
Average Queue (ft)	103	208	150	186	215	176	176	173	257	167	94	39
95th Queue (ft)	216	285	253	279	325	263	260	262	398	314	165	80
Link Distance (ft)		1183			444	444	444	444	949	949	949	
Upstream Blk Time (%)					0							
Queuing Penalty (veh)					1							
Storage Bay Dist (ft)	500		500	155								140
Storage Blk Time (%)				10	20						2	
Queuing Penalty (veh)				29	61						3	

Intersection: 2: La Sierra Av. & SR-91 EB Ramps

Movement	EB	EB	EB	NB	NB	NB	NB	SB	SB	SB	SB	SB
Directions Served	L	LTR	R	T	T	T	R	L	L	T	T	T
Maximum Queue (ft)	289	468	400	475	430	411	269	187	212	212	169	200
Average Queue (ft)	35	279	193	265	215	208	95	92	119	40	38	62
95th Queue (ft)	183	420	364	424	364	349	184	160	181	137	116	141
Link Distance (ft)	1430	1430		848	848	848				444	444	444
Upstream Blk Time (%)										0	0	
Queuing Penalty (veh)										0	0	
Storage Bay Dist (ft)			450				415	155	155			
Storage Blk Time (%)		1	0			0		1	9	0		
Queuing Penalty (veh)		2	0			0		2	27	1		

Intersection: 3: La Sierra Av. & Indiana Av./S. Indiana Av.

Movement	EB	EB	EB	EB	EB	WB	WB	WB	WB	WB	NB	NB
Directions Served	L	L	T	T	R	L	L	T	T	R	L	L
Maximum Queue (ft)	234	260	256	174	91	77	111	122	150	181	172	274
Average Queue (ft)	129	162	66	54	35	22	46	57	47	93	102	131
95th Queue (ft)	226	247	178	119	71	56	86	96	107	159	156	224
Link Distance (ft)			2554	2554				2432	2432			
Upstream Blk Time (%)												
Queuing Penalty (veh)												
Storage Bay Dist (ft)	205	205			205	205	205			130	200	200
Storage Blk Time (%)	0	4	0						0	4	0	0
Queuing Penalty (veh)	0	4	1						0	4	0	2

Intersection: 3: La Sierra Av. & Indiana Av./S. Indiana Av.

Movement	NB	NB	NB	NB	SB	SB	SB	SB	SB	SB
Directions Served	T	T	T	R	L	L	T	T	T	R
Maximum Queue (ft)	371	360	594	142	90	129	242	232	216	280
Average Queue (ft)	180	182	220	31	36	55	133	138	123	115
95th Queue (ft)	300	300	423	90	76	101	208	211	194	217
Link Distance (ft)	2691	2691	2691				848	848	848	
Upstream Blk Time (%)										
Queuing Penalty (veh)										
Storage Bay Dist (ft)				305	355	355				535
Storage Blk Time (%)	7		3							
Queuing Penalty (veh)	23		4							

Intersection: 4: La Sierra Av. & Victoria Av.

Movement	EB	EB	EB	EB	WB	WB	WB	NB	NB	NB	SB	SB
Directions Served	L	L	T	R	L	T	R	L	T	TR	L	T
Maximum Queue (ft)	40	81	130	60	122	128	151	162	330	388	188	205
Average Queue (ft)	8	30	53	25	51	55	62	32	170	201	72	61
95th Queue (ft)	31	67	106	50	104	109	112	98	293	330	142	148
Link Distance (ft)			843	843		1670			2640	2640		1333
Upstream Blk Time (%)												
Queuing Penalty (veh)												
Storage Bay Dist (ft)	130	130			205		200	215			210	
Storage Blk Time (%)			1				0		4			0
Queuing Penalty (veh)			0				0		2			0

Intersection: 4: La Sierra Av. & Victoria Av.

Movement	SB	B20	B20
Directions Served	TR	T	T
Maximum Queue (ft)	202	43	16
Average Queue (ft)	76	1	1
95th Queue (ft)	167	27	8
Link Distance (ft)	1333	2691	2691
Upstream Blk Time (%)			
Queuing Penalty (veh)			
Storage Bay Dist (ft)			
Storage Blk Time (%)			
Queuing Penalty (veh)			

Intersection: 5: La Sierra Av. & McAllister Pkwy.

Movement	WB	WB	NB	NB	NB	SB	SB	SB
Directions Served	L	R	T	T	R	L	T	T
Maximum Queue (ft)	46	135	272	239	35	125	102	136
Average Queue (ft)	12	60	126	107	7	55	25	44
95th Queue (ft)	34	108	216	194	28	105	73	104
Link Distance (ft)		3360	1207	1207			2640	2640
Upstream Blk Time (%)								
Queuing Penalty (veh)								
Storage Bay Dist (ft)	150				200	300		
Storage Blk Time (%)		0		0				
Queuing Penalty (veh)		0		0				

Network Summary

Network wide Queuing Penalty: 169



Lane Group	WBL	WBT	WBR	NBL	NBT	SBT	SBR
Lane Group Flow (vph)	354	336	323	384	926	1396	275
v/c Ratio	0.79	0.70	0.65	0.76	0.29	0.62	0.34
Control Delay (s/veh)	46.2	30.3	25.5	38.5	21.5	24.6	8.1
Queue Delay	0.0	0.0	0.0	0.0	0.0	0.0	0.0
Total Delay (s/veh)	46.2	30.3	25.5	38.5	21.5	24.6	8.1
Queue Length 50th (ft)	217	148	118	133	210	251	29
Queue Length 95th (ft)	300	235	197	176	251	342	96
Internal Link Dist (ft)		1180			412	935	
Turn Bay Length (ft)	500		500	155			140
Base Capacity (vph)	571	583	600	553	3221	2257	806
Starvation Cap Reductn	0	0	0	0	0	0	0
Spillback Cap Reductn	0	0	0	0	0	0	0
Storage Cap Reductn	0	0	0	0	0	0	0
Reduced v/c Ratio	0.62	0.58	0.54	0.69	0.29	0.62	0.34

Intersection Summary



Lane Group	EBL	EBT	EBR	NBT	NBR	SBL	SBT
Lane Group Flow (vph)	184	420	422	1080	295	413	1440
v/c Ratio	0.32	0.83	0.75	0.60	0.40	0.77	0.51
Control Delay (s/veh)	24.1	42.6	32.0	29.9	5.2	30.0	9.7
Queue Delay	0.0	0.0	0.0	0.0	0.0	0.0	0.3
Total Delay (s/veh)	24.1	42.6	32.0	29.9	5.2	30.0	10.0
Queue Length 50th (ft)	88	253	205	212	0	72	198
Queue Length 95th (ft)	128	346	290	284	62	#188	281
Internal Link Dist (ft)		1416		886			412
Turn Bay Length (ft)			450		415	155	
Base Capacity (vph)	722	628	681	1802	746	550	2825
Starvation Cap Reductn	0	0	0	0	0	0	618
Spillback Cap Reductn	0	0	0	0	0	0	0
Storage Cap Reductn	0	0	0	0	0	0	0
Reduced v/c Ratio	0.25	0.67	0.62	0.60	0.40	0.75	0.65

Intersection Summary

95th percentile volume exceeds capacity, queue may be longer.
Queue shown is maximum after two cycles.

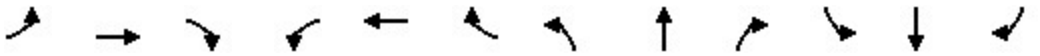

Lane Group	EBL	EBT	EBR	WBL	WBT	WBR	NBL	NBT	NBR	SBL	SBT	SBR
Lane Group Flow (vph)	401	373	398	165	205	264	233	866	118	307	1571	405
v/c Ratio	0.82	0.44	0.77	0.55	0.31	0.60	0.79	0.48	0.19	0.78	0.81	0.48
Control Delay (s/veh)	58.3	33.8	28.1	53.4	35.7	16.9	66.5	28.2	6.2	59.9	33.6	4.9
Queue Delay	0.0	0.0	0.0	0.0	0.0	0.0	0.0	0.0	0.0	0.0	0.0	0.0
Total Delay (s/veh)	58.3	33.8	28.1	53.4	35.7	16.9	66.5	28.2	6.2	59.9	33.6	4.9
Queue Length 50th (ft)	126	107	125	51	60	43	75	151	0	97	312	0
Queue Length 95th (ft)	#263	151	236	101	91	116	#174	254	44	#207	#542	72
Internal Link Dist (ft)		2549			2428			2703			886	
Turn Bay Length (ft)	205		205	205		130	200		305	355		535
Base Capacity (vph)	490	1461	753	368	1335	704	296	1799	626	402	1943	836
Starvation Cap Reductn	0	0	0	0	0	0	0	0	0	0	0	0
Spillback Cap Reductn	0	0	0	0	0	0	0	0	0	0	0	0
Storage Cap Reductn	0	0	0	0	0	0	0	0	0	0	0	0
Reduced v/c Ratio	0.82	0.26	0.53	0.45	0.15	0.38	0.79	0.48	0.19	0.76	0.81	0.48

Intersection Summary

95th percentile volume exceeds capacity, queue may be longer.
Queue shown is maximum after two cycles.

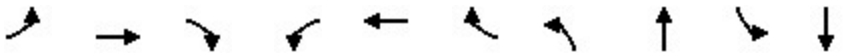

Lane Group	EBL	EBT	EBR	WBL	WBT	WBR	NBL	NBT	SBL	SBT
Lane Group Flow (vph)	62	111	156	277	80	183	29	881	201	1536
v/c Ratio	0.34	0.43	0.41	0.91	0.16	0.33	0.33	0.73	0.80	0.91
Control Delay (s/veh)	55.1	45.5	5.7	76.8	30.9	6.1	61.4	33.3	68.1	35.0
Queue Delay	0.0	0.0	0.0	0.0	0.0	0.0	0.0	0.0	0.0	0.0
Total Delay (s/veh)	55.1	45.5	5.7	76.8	30.9	6.1	61.4	33.3	68.1	35.0
Queue Length 50th (ft)	20	70	0	180	43	0	19	243	129	476
Queue Length 95th (ft)	48	121	30	#412	81	50	55	397	#301	#841
Internal Link Dist (ft)		810			1637			2644		1335
Turn Bay Length (ft)	130			205		200	215		210	
Base Capacity (vph)	187	535	586	305	742	732	87	1338	259	1692
Starvation Cap Reductn	0	0	0	0	0	0	0	0	0	0
Spillback Cap Reductn	0	0	0	0	0	0	0	0	0	0
Storage Cap Reductn	0	0	0	0	0	0	0	0	0	0
Reduced v/c Ratio	0.33	0.21	0.27	0.91	0.11	0.25	0.33	0.66	0.78	0.91

Intersection Summary

95th percentile volume exceeds capacity, queue may be longer.
Queue shown is maximum after two cycles.



Lane Group	WBL	WBR	NBT	NBR	SBL	SBT
Lane Group Flow (vph)	9	160	751	13	288	1582
v/c Ratio	0.03	0.38	0.63	0.02	0.68	0.69
Control Delay (s/veh)	29.8	8.6	24.2	10.9	35.7	10.4
Queue Delay	0.0	0.0	0.0	0.0	0.0	0.0
Total Delay (s/veh)	29.8	8.6	24.2	10.9	35.7	10.4
Queue Length 50th (ft)	3	0	127	0	102	166
Queue Length 95th (ft)	19	53	306	14	280	431
Internal Link Dist (ft)	3339		1159			2644
Turn Bay Length (ft)	150			200	300	
Base Capacity (vph)	777	785	2127	936	877	3317
Starvation Cap Reductn	0	0	0	0	0	0
Spillback Cap Reductn	0	0	0	0	0	0
Storage Cap Reductn	0	0	0	0	0	0
Reduced v/c Ratio	0.01	0.20	0.35	0.01	0.33	0.48

Intersection Summary

Intersection: 1: La Sierra Av. & SR-91 WB Ramps

Movement	WB	WB	WB	NB	NB	NB	NB	NB	SB	SB	SB	SB
Directions Served	L	LTR	R	L	L	T	T	T	T	T	T	R
Maximum Queue (ft)	298	363	304	232	281	232	230	238	664	601	290	187
Average Queue (ft)	161	245	186	122	149	150	152	153	420	326	141	61
95th Queue (ft)	268	330	277	198	225	221	222	225	608	529	243	129
Link Distance (ft)		1183			444	444	444	444	949	949	949	
Upstream Blk Time (%)												
Queuing Penalty (veh)												
Storage Bay Dist (ft)	500		500	155								140
Storage Blk Time (%)				2	7						5	0
Queuing Penalty (veh)				4	13						12	1

Intersection: 2: La Sierra Av. & SR-91 EB Ramps

Movement	EB	EB	EB	NB	NB	NB	NB	SB	SB	SB	SB	SB
Directions Served	L	LTR	R	T	T	T	R	L	L	T	T	T
Maximum Queue (ft)	127	373	314	367	327	323	144	178	218	322	249	234
Average Queue (ft)	9	241	188	201	175	182	67	99	128	104	99	120
95th Queue (ft)	66	341	294	333	298	297	115	168	193	224	193	204
Link Distance (ft)	1430	1430		848	848	848				444	444	444
Upstream Blk Time (%)										0		
Queuing Penalty (veh)										0		
Storage Bay Dist (ft)			450				415	155	155			
Storage Blk Time (%)								1	6	2		
Queuing Penalty (veh)								6	29	8		

Intersection: 3: La Sierra Av. & Indiana Av./S. Indiana Av.

Movement	EB	EB	EB	EB	EB	WB	WB	WB	WB	WB	NB	NB
Directions Served	L	L	T	T	R	L	L	T	T	R	L	L
Maximum Queue (ft)	234	260	316	226	243	122	121	119	129	151	151	174
Average Queue (ft)	135	166	106	97	125	45	63	57	47	66	81	96
95th Queue (ft)	228	242	218	166	213	92	107	101	97	120	136	155
Link Distance (ft)			2554	2554				2432	2432			
Upstream Blk Time (%)												
Queuing Penalty (veh)												
Storage Bay Dist (ft)	205	205			205	205	205			130	200	200
Storage Blk Time (%)	0	3	0	0	1				0	1	0	0
Queuing Penalty (veh)	1	6	2	0	2				0	1	0	0

Intersection: 3: La Sierra Av. & Indiana Av./S. Indiana Av.

Movement	NB	NB	NB	NB	SB	SB	SB	SB	SB	SB
Directions Served	T	T	T	R	L	L	T	T	T	R
Maximum Queue (ft)	221	216	262	88	183	249	388	389	386	221
Average Queue (ft)	121	126	151	29	96	113	220	235	240	79
95th Queue (ft)	203	203	240	67	163	196	345	357	364	159
Link Distance (ft)	2691	2691	2691				848	848	848	
Upstream Blk Time (%)										
Queuing Penalty (veh)										
Storage Bay Dist (ft)				305	355	355				535
Storage Blk Time (%)	1		0				1			
Queuing Penalty (veh)	3		0				2			

Intersection: 4: La Sierra Av. & Victoria Av.

Movement	EB	EB	EB	EB	WB	WB	WB	NB	NB	NB	SB	SB
Directions Served	L	L	T	R	L	T	R	L	T	TR	L	T
Maximum Queue (ft)	54	112	151	135	290	314	210	158	323	332	274	553
Average Queue (ft)	12	41	72	69	180	70	57	25	158	183	174	279
95th Queue (ft)	41	89	137	119	272	187	124	84	279	307	295	486
Link Distance (ft)			843	843		1670			2640	2640		1333
Upstream Blk Time (%)												
Queuing Penalty (veh)												
Storage Bay Dist (ft)	130	130			205		200	215			210	
Storage Blk Time (%)	0	0	2		9	0			3		2	17
Queuing Penalty (veh)	0	0	1		23	0			1		14	33

Intersection: 4: La Sierra Av. & Victoria Av.

Movement	SB	B20	B20
Directions Served	TR	T	T
Maximum Queue (ft)	548	1356	1361
Average Queue (ft)	290	58	63
95th Queue (ft)	497	597	602
Link Distance (ft)	1333	2691	2691
Upstream Blk Time (%)		0	0
Queuing Penalty (veh)		0	0
Storage Bay Dist (ft)			
Storage Blk Time (%)			
Queuing Penalty (veh)			

Intersection: 5: La Sierra Av. & McAllister Pkwy.

Movement	WB	WB	NB	NB	NB	SB	SB	SB
Directions Served	L	R	T	T	R	L	T	T
Maximum Queue (ft)	24	82	213	186	31	275	269	269
Average Queue (ft)	5	37	104	80	5	136	58	80
95th Queue (ft)	19	70	178	157	22	228	165	193
Link Distance (ft)		3360	1207	1207			2640	2640
Upstream Blk Time (%)								
Queuing Penalty (veh)								
Storage Bay Dist (ft)	150				200	300		
Storage Blk Time (%)				0		0	0	
Queuing Penalty (veh)				0		1	0	

Network Summary

Network wide Queuing Penalty: 162

APPENDIX 3.5: EXISTING (2024) CONDITIONS INTERSECTION OPERATIONS ANALYSIS WORKSHEETS WITH IMPROVEMENTS

This Page Intentionally Left Blank

Lane Group	WBL	NBT	SBL	SBT
Lane Configurations				
Traffic Volume (vph)	58	108	227	127
Future Volume (vph)	58	108	227	127
Turn Type	Prot	NA	Prot	NA
Protected Phases	8	2	1	6
Permitted Phases				
Detector Phase	8	2	1	6
Switch Phase				
Minimum Initial (s)	5.0	10.0	5.0	10.0
Minimum Split (s)	23.8	23.8	10.8	23.8
Total Split (s)	67.0	25.0	28.0	53.0
Total Split (%)	55.8%	20.8%	23.3%	44.2%
Yellow Time (s)	4.8	4.8	4.8	4.8
All-Red Time (s)	1.0	1.0	1.0	1.0
Lost Time Adjust (s)	0.0	0.0	0.0	0.0
Total Lost Time (s)	5.8	5.8	5.8	5.8
Lead/Lag		Lag	Lead	
Lead-Lag Optimize?		Yes	Yes	
Recall Mode	None	None	None	None
Act Effct Green (s)	9.9	12.3	13.2	22.9
Actuated g/C Ratio	0.20	0.25	0.27	0.47
v/c Ratio	0.76	0.15	0.50	0.15
Control Delay (s/veh)	11.8	17.6	22.6	7.5
Queue Delay	0.0	0.0	0.0	0.0
Total Delay (s/veh)	11.8	17.6	22.6	7.5
LOS	B	B	C	A
Approach Delay (s/veh)	11.8	17.6		17.1
Approach LOS	B	B		B

Intersection Summary	
Cycle Length: 120	
Actuated Cycle Length: 49	
Natural Cycle: 65	
Control Type: Actuated-Uncoordinated	
Maximum v/c Ratio: 0.76	
Intersection Signal Delay (s/veh): 14.4	Intersection LOS: B
Intersection Capacity Utilization 66.7%	ICU Level of Service C
Analysis Period (min) 15	

Splits and Phases: 6: La Sierra Av. & El Sobrante Rd.

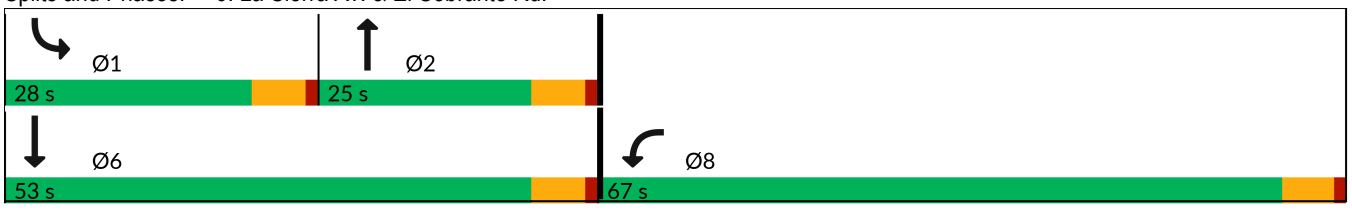



Movement	WBL	WBR	NBT	NBR	SBL	SBT
Lane Configurations						
Traffic Volume (veh/h)	58	455	108	20	227	127
Future Volume (veh/h)	58	455	108	20	227	127
Initial Q (Qb), veh	0	0	0	0	0	0
Lane Width Adj.	1.00	1.00	1.00	1.00	1.00	1.00
Ped-Bike Adj(A_pbT)	1.00	1.00		1.00	1.00	
Parking Bus, Adj	1.00	1.00	1.00	1.00	1.00	1.00
Work Zone On Approach	No		No			No
Adj Sat Flow, veh/h/ln	1870	1870	1870	1870	1870	1870
Adj Flow Rate, veh/h	61	268	114	16	239	134
Peak Hour Factor	0.95	0.95	0.95	0.95	0.95	0.95
Percent Heavy Veh, %	2	2	2	2	2	2
Cap, veh/h	77	336	563	78	312	906
Arrive On Green	0.26	0.26	0.18	0.18	0.17	0.48
Sat Flow, veh/h	299	1315	3230	432	1781	1870
Grp Volume(v), veh/h	330	0	64	66	239	134
Grp Sat Flow(s),veh/h/ln	1619	0	1777	1793	1781	1870
Q Serve(g_s), s	8.5	0.0	1.4	1.4	5.7	1.8
Cycle Q Clear(g_c), s	8.5	0.0	1.4	1.4	5.7	1.8
Prop In Lane	0.18	0.81		0.24	1.00	
Lane Grp Cap(c), veh/h	414	0	319	322	312	906
V/C Ratio(X)	0.80	0.00	0.20	0.21	0.77	0.15
Avail Cap(c_a), veh/h	2220	0	764	771	886	1978
HCM Platoon Ratio	1.00	1.00	1.00	1.00	1.00	1.00
Upstream Filter(I)	1.00	0.00	1.00	1.00	1.00	1.00
Uniform Delay (d), s/veh	15.5	0.0	15.6	15.6	17.5	6.4
Incr Delay (d2), s/veh	3.5	0.0	0.3	0.3	4.0	0.1
Initial Q Delay(d3), s/veh	0.0	0.0	0.0	0.0	0.0	0.0
%ile BackOfQ(50%),veh/ln	2.8	0.0	0.4	0.5	2.1	0.4
Unsig. Movement Delay, s/veh						
LnGrp Delay(d), s/veh	19.1	0.0	15.9	15.9	21.5	6.5
LnGrp LOS	B		B	B	C	A
Approach Vol, veh/h	330		130			373
Approach Delay, s/veh	19.1		15.9			16.1
Approach LOS	B		B			B

Timer - Assigned Phs	1	2				6	8
Phs Duration (G+Y+Rc), s	13.6	13.8				27.4	17.2
Change Period (Y+Rc), s	5.8	5.8				5.8	5.8
Max Green Setting (Gmax), s	22.2	19.2				47.2	61.2
Max Q Clear Time (g_c+I1), s	7.7	3.4				3.8	10.5
Green Ext Time (p_c), s	0.5	0.4				0.6	1.1

Intersection Summary	
HCM 7th Control Delay, s/veh	17.2
HCM 7th LOS	B

Lane Group	EBL	EBT	WBT	SBL
Lane Configurations				
Traffic Volume (vph)	49	217	439	47
Future Volume (vph)	49	217	439	47
Turn Type	Prot	NA	NA	Prot
Protected Phases	7	4	8	6
Permitted Phases				
Detector Phase	7	4	8	6
Switch Phase				
Minimum Initial (s)	5.0	10.0	10.0	5.0
Minimum Split (s)	10.8	23.8	23.8	23.8
Total Split (s)	25.0	80.0	55.0	40.0
Total Split (%)	20.8%	66.7%	45.8%	33.3%
Yellow Time (s)	3.6	4.8	4.8	3.6
All-Red Time (s)	1.0	1.0	1.0	1.0
Lost Time Adjust (s)	0.0	0.0	0.0	0.0
Total Lost Time (s)	4.6	5.8	5.8	4.6
Lead/Lag	Lead		Lag	
Lead-Lag Optimize?	Yes		Yes	
Recall Mode	None	None	None	None
Act Effct Green (s)	6.9	19.9	16.6	8.3
Actuated g/C Ratio	0.20	0.58	0.49	0.24
v/c Ratio	0.14	0.21	0.32	0.27
Control Delay (s/veh)	18.6	6.4	10.4	9.9
Queue Delay	0.0	0.0	0.0	0.0
Total Delay (s/veh)	18.6	6.4	10.4	9.9
LOS	B	A	B	A
Approach Delay (s/veh)		8.6	10.4	9.9
Approach LOS		A	B	A

Intersection Summary	
Cycle Length: 120	
Actuated Cycle Length: 34.2	
Natural Cycle: 60	
Control Type: Actuated-Uncoordinated	
Maximum v/c Ratio: 0.32	
Intersection Signal Delay (s/veh): 9.8	Intersection LOS: A
Intersection Capacity Utilization 38.5%	ICU Level of Service A
Analysis Period (min) 15	

Splits and Phases: 7: El Sobrante Rd. & McAllister St.

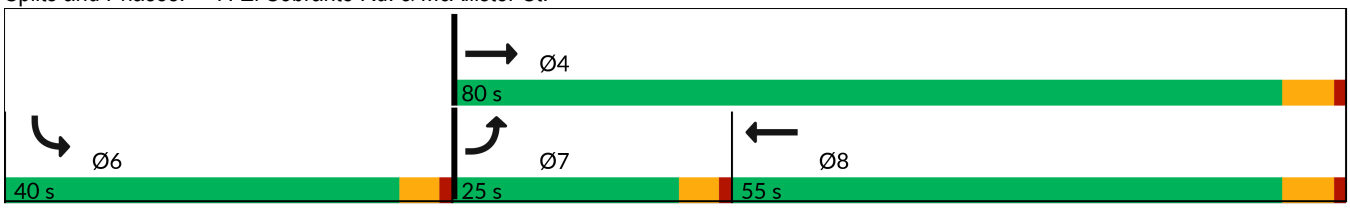

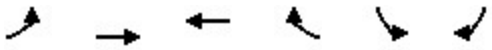

Movement	EBL	EBT	WBT	WBR	SBL	SBR
Lane Configurations						
Traffic Volume (veh/h)	49	217	439	88	47	70
Future Volume (veh/h)	49	217	439	88	47	70
Initial Q (Qb), veh	0	0	0	0	0	0
Lane Width Adj.	1.00	1.00	1.00	1.00	1.00	1.00
Ped-Bike Adj(A_pbT)	1.00			1.00	1.00	1.00
Parking Bus, Adj	1.00	1.00	1.00	1.00	1.00	1.00
Work Zone On Approach		No	No		No	
Adj Sat Flow, veh/h/ln	1870	1870	1870	1870	1870	1870
Adj Flow Rate, veh/h	51	226	457	92	49	73
Peak Hour Factor	0.96	0.96	0.96	0.96	0.96	0.96
Percent Heavy Veh, %	2	2	2	2	2	2
Cap, veh/h	103	1017	979	196	71	106
Arrive On Green	0.06	0.54	0.33	0.33	0.11	0.11
Sat Flow, veh/h	1781	1870	3044	590	661	985
Grp Volume(v), veh/h	51	226	274	275	123	0
Grp Sat Flow(s),veh/h/ln	1781	1870	1777	1764	1660	0
Q Serve(g_s), s	0.8	1.9	3.6	3.7	2.1	0.0
Cycle Q Clear(g_c), s	0.8	1.9	3.6	3.7	2.1	0.0
Prop In Lane	1.00			0.33	0.40	0.59
Lane Grp Cap(c), veh/h	103	1017	590	585	178	0
V/C Ratio(X)	0.50	0.22	0.46	0.47	0.69	0.00
Avail Cap(c_a), veh/h	1219	4655	2933	2912	1971	0
HCM Platoon Ratio	1.00	1.00	1.00	1.00	1.00	1.00
Upstream Filter(I)	1.00	1.00	1.00	1.00	1.00	0.00
Uniform Delay (d), s/veh	13.6	3.5	7.9	7.9	12.8	0.0
Incr Delay (d2), s/veh	1.4	0.1	0.6	0.6	1.8	0.0
Initial Q Delay(d3), s/veh	0.0	0.0	0.0	0.0	0.0	0.0
%ile BackOfQ(50%),veh/ln	0.3	0.1	0.7	0.7	0.6	0.0
Unsig. Movement Delay, s/veh						
LnGrp Delay(d), s/veh	15.0	3.6	8.4	8.5	14.6	0.0
LnGrp LOS	B	A	A	A	B	
Approach Vol, veh/h		277	549		123	
Approach Delay, s/veh		5.7	8.5		14.6	
Approach LOS		A	A		B	

Timer - Assigned Phs	4	6	7	8
Phs Duration (G+Y+Rc), s	22.0	7.8	6.3	15.7
Change Period (Y+Rc), s	5.8	4.6	4.6	5.8
Max Green Setting (Gmax), s	74.2	35.4	20.4	49.2
Max Q Clear Time (g_c+I1), s	3.9	4.1	2.8	5.7
Green Ext Time (p_c), s	1.2	0.2	0.0	3.2

Intersection Summary	
HCM 7th Control Delay, s/veh	8.5
HCM 7th LOS	A

Lane Group	WBL	NBT	SBL	SBT
Lane Configurations				
Traffic Volume (vph)	72	221	616	474
Future Volume (vph)	72	221	616	474
Turn Type	Prot	NA	Prot	NA
Protected Phases	8	2	1	6
Permitted Phases				
Detector Phase	8	2	1	6
Switch Phase				
Minimum Initial (s)	5.0	10.0	5.0	10.0
Minimum Split (s)	23.8	23.8	10.8	23.8
Total Split (s)	40.0	26.0	54.0	80.0
Total Split (%)	33.3%	21.7%	45.0%	66.7%
Yellow Time (s)	4.8	4.8	4.8	4.8
All-Red Time (s)	1.0	1.0	1.0	1.0
Lost Time Adjust (s)	0.0	0.0	0.0	0.0
Total Lost Time (s)	5.8	5.8	5.8	5.8
Lead/Lag		Lag	Lead	
Lead-Lag Optimize?		Yes	Yes	
Recall Mode	None	None	None	None
Act Effct Green (s)	20.3	14.3	40.6	61.1
Actuated g/C Ratio	0.22	0.15	0.43	0.65
v/c Ratio	0.81	0.59	0.86	0.42
Control Delay (s/veh)	33.6	39.7	38.6	10.0
Queue Delay	0.0	0.0	0.0	0.0
Total Delay (s/veh)	33.6	39.7	38.6	10.0
LOS	C	D	D	B
Approach Delay (s/veh)	33.6	39.7		26.2
Approach LOS	C	D		C

Intersection Summary	
Cycle Length: 120	
Actuated Cycle Length: 93.6	
Natural Cycle: 90	
Control Type: Actuated-Uncoordinated	
Maximum v/c Ratio: 0.86	
Intersection Signal Delay (s/veh): 30.1	Intersection LOS: C
Intersection Capacity Utilization 80.1%	ICU Level of Service D
Analysis Period (min) 15	

Splits and Phases: 6: La Sierra Av. & El Sobrante Rd.

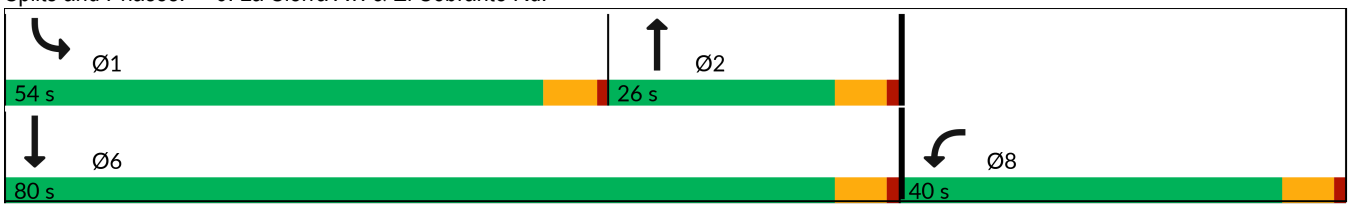



Movement	WBL	WBR	NBT	NBR	SBL	SBT
Lane Configurations						
Traffic Volume (veh/h)	72	303	221	83	616	474
Future Volume (veh/h)	72	303	221	83	616	474
Initial Q (Qb), veh	0	0	0	0	0	0
Lane Width Adj.	1.00	1.00	1.00	1.00	1.00	1.00
Ped-Bike Adj(A_pbT)	1.00	1.00		1.00	1.00	
Parking Bus, Adj	1.00	1.00	1.00	1.00	1.00	1.00
Work Zone On Approach	No		No			No
Adj Sat Flow, veh/h/ln	1870	1870	1870	1870	1870	1870
Adj Flow Rate, veh/h	77	192	238	67	662	510
Peak Hour Factor	0.93	0.93	0.93	0.93	0.93	0.93
Percent Heavy Veh, %	2	2	2	2	2	2
Cap, veh/h	92	230	395	109	728	1189
Arrive On Green	0.20	0.20	0.14	0.14	0.41	0.64
Sat Flow, veh/h	467	1164	2847	758	1781	1870
Grp Volume(v), veh/h	270	0	152	153	662	510
Grp Sat Flow(s),veh/h/ln	1637	0	1777	1734	1781	1870
Q Serve(g_s), s	11.0	0.0	5.6	5.8	24.3	9.5
Cycle Q Clear(g_c), s	11.0	0.0	5.6	5.8	24.3	9.5
Prop In Lane	0.29	0.71		0.44	1.00	
Lane Grp Cap(c), veh/h	323	0	255	249	728	1189
V/C Ratio(X)	0.83	0.00	0.60	0.62	0.91	0.43
Avail Cap(c_a), veh/h	805	0	516	504	1235	1996
HCM Platoon Ratio	1.00	1.00	1.00	1.00	1.00	1.00
Upstream Filter(I)	1.00	0.00	1.00	1.00	1.00	1.00
Uniform Delay (d), s/veh	26.8	0.0	27.9	28.0	19.3	6.3
Incr Delay (d2), s/veh	5.6	0.0	2.2	2.5	5.9	0.2
Initial Q Delay(d3), s/veh	0.0	0.0	0.0	0.0	0.0	0.0
%ile BackOfQ(50%),veh/ln	4.4	0.0	2.2	2.3	9.0	2.2
Unsig. Movement Delay, s/veh						
LnGrp Delay(d), s/veh	32.5	0.0	30.1	30.5	25.2	6.6
LnGrp LOS	C		C	C	C	A
Approach Vol, veh/h	270		305			1172
Approach Delay, s/veh	32.5		30.3			17.1
Approach LOS	C		C			B

Timer - Assigned Phs	1	2				6	8
Phs Duration (G+Y+Rc), s	34.2	15.8				50.0	19.5
Change Period (Y+Rc), s	5.8	5.8				5.8	5.8
Max Green Setting (Gmax), s	48.2	20.2				74.2	34.2
Max Q Clear Time (g_c+I1), s	26.3	7.8				11.5	13.0
Green Ext Time (p_c), s	2.1	1.1				3.0	0.8

Intersection Summary	
HCM 7th Control Delay, s/veh	21.8
HCM 7th LOS	C

Lane Group	EBL	EBT	WBT	SBL
Lane Configurations				
Traffic Volume (vph)	60	640	283	32
Future Volume (vph)	60	640	283	32
Turn Type	Prot	NA	NA	Prot
Protected Phases	7	4	8	6
Permitted Phases				
Detector Phase	7	4	8	6
Switch Phase				
Minimum Initial (s)	5.0	10.0	10.0	5.0
Minimum Split (s)	10.8	23.8	23.8	23.8
Total Split (s)	19.0	88.0	69.0	32.0
Total Split (%)	15.8%	73.3%	57.5%	26.7%
Yellow Time (s)	3.6	4.8	4.8	3.6
All-Red Time (s)	1.0	1.0	1.0	1.0
Lost Time Adjust (s)	0.0	0.0	0.0	0.0
Total Lost Time (s)	4.6	5.8	5.8	4.6
Lead/Lag	Lead		Lag	
Lead-Lag Optimize?	Yes		Yes	
Recall Mode	None	None	None	None
Act Effct Green (s)	7.0	23.1	19.3	7.8
Actuated g/C Ratio	0.19	0.63	0.52	0.21
v/c Ratio	0.19	0.58	0.18	0.33
Control Delay (s/veh)	19.3	9.4	9.6	8.4
Queue Delay	0.0	0.0	0.0	0.0
Total Delay (s/veh)	19.3	9.4	9.6	8.4
LOS	B	A	A	A
Approach Delay (s/veh)		10.3	9.6	8.4
Approach LOS		B	A	A

Intersection Summary	
Cycle Length: 120	
Actuated Cycle Length: 36.8	
Natural Cycle: 60	
Control Type: Actuated-Uncoordinated	
Maximum v/c Ratio: 0.58	
Intersection Signal Delay (s/veh): 9.9	Intersection LOS: A
Intersection Capacity Utilization 50.6%	ICU Level of Service A
Analysis Period (min) 15	

Splits and Phases: 7: El Sobrante Rd. & McAllister St.

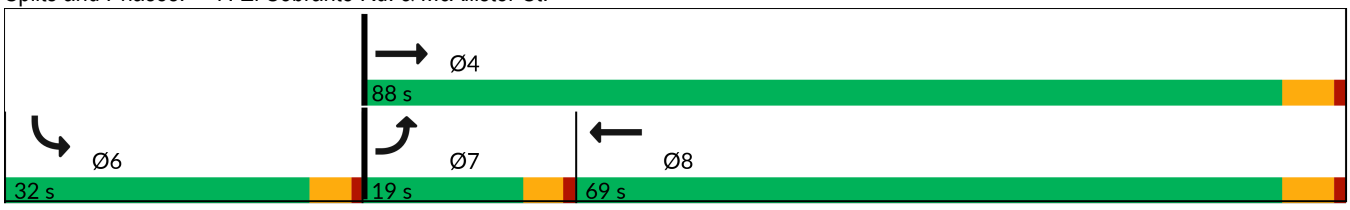

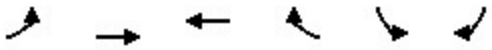

Movement	EBL	EBT	WBT	WBR	SBL	SBR
Lane Configurations						
Traffic Volume (veh/h)	60	640	283	28	32	105
Future Volume (veh/h)	60	640	283	28	32	105
Initial Q (Qb), veh	0	0	0	0	0	0
Lane Width Adj.	1.00	1.00	1.00	1.00	1.00	1.00
Ped-Bike Adj(A_pbT)	1.00			1.00	1.00	1.00
Parking Bus, Adj	1.00	1.00	1.00	1.00	1.00	1.00
Work Zone On Approach		No	No		No	
Adj Sat Flow, veh/h/ln	1870	1870	1870	1870	1870	1870
Adj Flow Rate, veh/h	64	681	301	30	34	112
Peak Hour Factor	0.94	0.94	0.94	0.94	0.94	0.94
Percent Heavy Veh, %	2	2	2	2	2	2
Cap, veh/h	123	1001	1021	101	44	146
Arrive On Green	0.07	0.54	0.31	0.31	0.12	0.12
Sat Flow, veh/h	1781	1870	3359	323	377	1241
Grp Volume(v), veh/h	64	681	163	168	147	0
Grp Sat Flow(s),veh/h/ln	1781	1870	1777	1812	1628	0
Q Serve(g_s), s	1.0	8.0	2.1	2.1	2.6	0.0
Cycle Q Clear(g_c), s	1.0	8.0	2.1	2.1	2.6	0.0
Prop In Lane	1.00			0.18	0.23	0.76
Lane Grp Cap(c), veh/h	123	1001	555	566	192	0
V/C Ratio(X)	0.52	0.68	0.29	0.30	0.77	0.00
Avail Cap(c_a), veh/h	856	5132	3749	3823	1489	0
HCM Platoon Ratio	1.00	1.00	1.00	1.00	1.00	1.00
Upstream Filter(I)	1.00	1.00	1.00	1.00	1.00	0.00
Uniform Delay (d), s/veh	13.5	5.1	7.8	7.8	12.8	0.0
Incr Delay (d2), s/veh	1.3	0.8	0.3	0.3	2.4	0.0
Initial Q Delay(d3), s/veh	0.0	0.0	0.0	0.0	0.0	0.0
%ile BackOfQ(50%),veh/ln	0.3	0.6	0.4	0.4	0.7	0.0
Unsig. Movement Delay, s/veh						
LnGrp Delay(d), s/veh	14.7	5.9	8.1	8.1	15.2	0.0
LnGrp LOS	B	A	A	A	B	
Approach Vol, veh/h		745	331		147	
Approach Delay, s/veh		6.7	8.1		15.2	
Approach LOS		A	A		B	

Timer - Assigned Phs	4	6	7	8
Phs Duration (G+Y+Rc), s	21.8	8.1	6.7	15.2
Change Period (Y+Rc), s	5.8	4.6	4.6	5.8
Max Green Setting (Gmax), s	82.2	27.4	14.4	63.2
Max Q Clear Time (g_c+I1), s	10.0	4.6	3.0	4.1
Green Ext Time (p_c), s	4.9	0.2	0.0	1.8

Intersection Summary	
HCM 7th Control Delay, s/veh	8.1
HCM 7th LOS	A

APPENDIX 5.1: EAP (2030) (PROJECT ONLY) CONDITIONS

INTERSECTION OPERATIONS ANALYSIS WORKSHEETS

This Page Intentionally Left Blank

Lane Group	WBL	WBT	WBR	NBL	NBT	SBT	SBR
Lane Configurations							
Traffic Volume (vph)	313	0	519	698	1475	1044	150
Future Volume (vph)	313	0	519	698	1475	1044	150
Turn Type	Split	NA	Perm	Prot	NA	NA	Perm
Protected Phases	8	8		5	2	6	
Permitted Phases			8				6
Detector Phase	8	8	8	5	2	6	6
Switch Phase							
Minimum Initial (s)	5.0	5.0	5.0	5.0	5.0	5.0	5.0
Minimum Split (s)	10.0	10.0	10.0	9.0	26.5	29.5	29.5
Total Split (s)	37.0	37.0	37.0	30.0	63.0	33.0	33.0
Total Split (%)	37.0%	37.0%	37.0%	30.0%	63.0%	33.0%	33.0%
Yellow Time (s)	4.0	4.0	4.0	3.0	4.5	4.5	4.5
All-Red Time (s)	1.0	1.0	1.0	1.0	1.0	1.0	1.0
Lost Time Adjust (s)	0.0	0.0	0.0	0.0	0.0	0.0	0.0
Total Lost Time (s)	5.0	5.0	5.0	4.0	5.5	5.5	5.5
Lead/Lag				Lead		Lag	Lag
Lead-Lag Optimize?				Yes		Yes	Yes
Recall Mode	None	None	None	None	C-Min	C-Min	C-Min
Act Effct Green (s)	23.5	23.5	23.5	24.3	66.0	37.7	37.7
Actuated g/C Ratio	0.24	0.24	0.24	0.24	0.66	0.38	0.38
v/c Ratio	0.74	0.71	0.69	0.86	0.45	0.57	0.24
Control Delay (s/veh)	46.5	35.0	34.0	43.2	16.9	27.9	8.2
Queue Delay	0.0	0.0	0.0	0.0	0.5	0.0	0.0
Total Delay (s/veh)	46.5	35.0	34.0	43.2	17.4	27.9	8.2
LOS	D	D	C	D	B	C	A
Approach Delay (s/veh)		38.6			25.7	25.4	
Approach LOS		D			C	C	

Intersection Summary	
Cycle Length: 100	
Actuated Cycle Length: 100	
Offset: 0 (0%), Referenced to phase 2:NBT and 6:SBT, Start of Yellow, Master Intersection	
Natural Cycle: 70	
Control Type: Actuated-Coordinated	
Maximum v/c Ratio: 0.86	
Intersection Signal Delay (s/veh): 28.2	Intersection LOS: C
Intersection Capacity Utilization 71.9%	ICU Level of Service C
Analysis Period (min) 15	

Splits and Phases: 1: La Sierra Av. & SR-91 WB Ramps



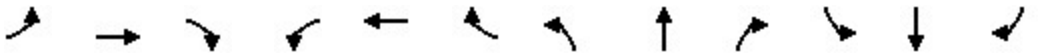

Movement	EBL	EBT	EBR	WBL	WBT	WBR	NBL	NBT	NBR	SBL	SBT	SBR
Lane Configurations												
Traffic Volume (veh/h)	0	0	0	313	0	519	698	1475	0	0	1044	150
Future Volume (veh/h)	0	0	0	313	0	519	698	1475	0	0	1044	150
Initial Q (Qb), veh				0	0	0	0	0	0	0	0	0
Lane Width Adj.				1.00	1.00	1.00	1.00	1.00	1.00	1.00	1.00	1.00
Ped-Bike Adj(A_pbT)				1.00		1.00	1.00		1.00	1.00		0.98
Parking Bus, Adj				1.00	1.00	1.00	1.00	1.00	1.00	1.00	1.00	1.00
Work Zone On Approach					No			No			No	
Adj Sat Flow, veh/h/ln				1856	1900	1885	1870	1870	0	0	1856	1826
Adj Flow Rate, veh/h				441	0	234	720	1521	0	0	1076	112
Peak Hour Factor				0.97	0.97	0.97	0.97	0.97	0.97	0.97	0.97	0.97
Percent Heavy Veh, %				3	0	1	2	2	0	0	3	5
Cap, veh/h				626	0	283	775	3665	0	0	2297	690
Arrive On Green				0.18	0.00	0.18	0.45	1.00	0.00	0.00	0.45	0.45
Sat Flow, veh/h				3534	0	1598	3456	5274	0	0	5233	1522
Grp Volume(v), veh/h				441	0	234	720	1521	0	0	1076	112
Grp Sat Flow(s),veh/h/ln				1767	0	1598	1728	1702	0	0	1689	1522
Q Serve(g_s), s				11.7	0.0	14.1	19.7	0.0	0.0	0.0	14.7	4.3
Cycle Q Clear(g_c), s				11.7	0.0	14.1	19.7	0.0	0.0	0.0	14.7	4.3
Prop In Lane				1.00		1.00	1.00		0.00	0.00		1.00
Lane Grp Cap(c), veh/h				626	0	283	775	3665	0	0	2297	690
V/C Ratio(X)				0.70	0.00	0.83	0.93	0.41	0.00	0.00	0.47	0.16
Avail Cap(c_a), veh/h				1131	0	511	898	3665	0	0	2297	690
HCM Platoon Ratio				1.00	1.00	1.00	2.00	2.00	1.00	1.00	1.00	1.00
Upstream Filter(I)				1.00	0.00	1.00	0.58	0.58	0.00	0.00	1.00	1.00
Uniform Delay (d), s/veh				38.7	0.0	39.7	26.8	0.0	0.0	0.0	19.0	16.1
Incr Delay (d2), s/veh				1.1	0.0	4.6	8.8	0.2	0.0	0.0	0.7	0.5
Initial Q Delay(d3), s/veh				0.0	0.0	0.0	0.0	0.0	0.0	0.0	0.0	0.0
%ile BackOfQ(50%),veh/ln				5.0	0.0	5.6	6.3	0.1	0.0	0.0	5.4	1.5
Unsig. Movement Delay, s/veh												
LnGrp Delay(d), s/veh				39.8	0.0	44.3	35.6	0.2	0.0	0.0	19.6	16.6
LnGrp LOS				D		D	D	A			B	B
Approach Vol, veh/h					675			2241			1188	
Approach Delay, s/veh					41.3			11.6			19.4	
Approach LOS					D			B			B	

Timer - Assigned Phs		2			5	6		8				
Phs Duration (G+Y+Rc), s		77.3			26.4	50.9		22.7				
Change Period (Y+Rc), s		5.5			4.0	5.5		5.0				
Max Green Setting (Gmax), s		57.5			26.0	27.5		32.0				
Max Q Clear Time (g_c+I1), s		2.0			21.7	16.7		16.1				
Green Ext Time (p_c), s		15.2			0.7	5.3		1.6				

Intersection Summary		
HCM 7th Control Delay, s/veh	18.7	
HCM 7th LOS	B	

Notes

User approved volume balancing among the lanes for turning movement.

Lane Group	EBL	EBT	EBR	NBT	NBR	SBL	SBT
Lane Configurations							
Traffic Volume (vph)	462	1	452	1658	522	340	1014
Future Volume (vph)	462	1	452	1658	522	340	1014
Turn Type	Split	NA	Perm	NA	Perm	Prot	NA
Protected Phases	4	4		2		1	6
Permitted Phases			4		2		
Detector Phase	4	4	4	2	2	1	6
Switch Phase							
Minimum Initial (s)	5.0	5.0	5.0	5.0	5.0	5.0	5.0
Minimum Split (s)	10.0	10.0	10.0	29.5	29.5	9.0	26.5
Total Split (s)	37.0	37.0	37.0	45.0	45.0	18.0	63.0
Total Split (%)	37.0%	37.0%	37.0%	45.0%	45.0%	18.0%	63.0%
Yellow Time (s)	4.0	4.0	4.0	4.5	4.5	3.0	4.5
All-Red Time (s)	1.0	1.0	1.0	1.0	1.0	1.0	1.0
Lost Time Adjust (s)	0.0	0.0	0.0	0.0	0.0	0.0	0.0
Total Lost Time (s)	5.0	5.0	5.0	5.5	5.5	4.0	5.5
Lead/Lag				Lag	Lag	Lead	
Lead-Lag Optimize?				Yes	Yes	Yes	
Recall Mode	None	None	None	C-Min	C-Min	None	C-Min
Act Effct Green (s)	25.2	25.2	25.2	46.2	46.2	14.1	64.3
Actuated g/C Ratio	0.25	0.25	0.25	0.46	0.46	0.14	0.64
v/c Ratio	0.78	0.76	0.70	0.74	0.54	0.75	0.33
Control Delay (s/veh)	46.9	39.1	31.2	25.9	4.1	56.2	2.6
Queue Delay	0.0	0.0	0.0	0.0	0.0	0.0	0.0
Total Delay (s/veh)	46.9	39.1	31.2	25.9	4.1	56.2	2.6
LOS	D	D	C	C	A	E	A
Approach Delay (s/veh)		39.3		20.7			16.0
Approach LOS		D		C			B

Intersection Summary	
Cycle Length: 100	
Actuated Cycle Length: 100	
Offset: 28 (28%), Referenced to phase 2:NBT and 6:SBT, Start of Yellow	
Natural Cycle: 60	
Control Type: Actuated-Coordinated	
Maximum v/c Ratio: 0.78	
Intersection Signal Delay (s/veh): 23.1	Intersection LOS: C
Intersection Capacity Utilization 71.9%	ICU Level of Service C
Analysis Period (min) 15	

Splits and Phases: 2: La Sierra Av. & SR-91 EB Ramps



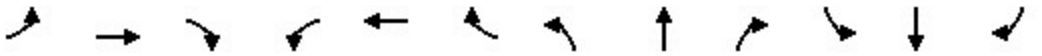

Movement	EBL	EBT	EBR	WBL	WBT	WBR	NBL	NBT	NBR	SBL	SBT	SBR
Lane Configurations												
Traffic Volume (veh/h)	462	1	452	0	0	0	0	1658	522	340	1014	0
Future Volume (veh/h)	462	1	452	0	0	0	0	1658	522	340	1014	0
Initial Q (Qb), veh	0	0	0				0	0	0	0	0	0
Lane Width Adj.	1.00	1.00	1.00				1.00	1.00	1.00	1.00	1.00	1.00
Ped-Bike Adj(A_pbT)	1.00		1.00				1.00		1.00	1.00		1.00
Parking Bus, Adj	1.00	1.00	1.00				1.00	1.00	1.00	1.00	1.00	1.00
Work Zone On Approach		No						No			No	
Adj Sat Flow, veh/h/ln	1885	1900	1811				0	1856	1856	1841	1856	0
Adj Flow Rate, veh/h	557	0	163				0	1727	392	354	1056	0
Peak Hour Factor	0.96	0.96	0.96				0.96	0.96	0.96	0.96	0.96	0.96
Percent Heavy Veh, %	1	0	6				0	3	3	4	3	0
Cap, veh/h	670	0	286				0	2752	853	426	3589	0
Arrive On Green	0.19	0.00	0.19				0.00	0.54	0.54	0.04	0.23	0.00
Sat Flow, veh/h	3591	0	1535				0	5233	1570	3401	5233	0
Grp Volume(v), veh/h	557	0	163				0	1727	392	354	1056	0
Grp Sat Flow(s),veh/h/ln	1795	0	1535				0	1689	1570	1700	1689	0
Q Serve(g_s), s	14.9	0.0	9.7				0.0	23.6	15.2	10.3	17.2	0.0
Cycle Q Clear(g_c), s	14.9	0.0	9.7				0.0	23.6	15.2	10.3	17.2	0.0
Prop In Lane	1.00		1.00				0.00		1.00	1.00		0.00
Lane Grp Cap(c), veh/h	670	0	286				0	2752	853	426	3589	0
V/C Ratio(X)	0.83	0.00	0.57				0.00	0.63	0.46	0.83	0.29	0.00
Avail Cap(c_a), veh/h	1149	0	491				0	2752	853	476	3589	0
HCM Platoon Ratio	1.00	1.00	1.00				1.00	1.00	1.00	0.33	0.33	1.00
Upstream Filter(I)	1.00	0.00	1.00				0.00	0.39	0.39	0.76	0.76	0.00
Uniform Delay (d), s/veh	39.2	0.0	37.0				0.0	15.8	13.9	46.9	17.7	0.0
Incr Delay (d2), s/veh	2.1	0.0	1.3				0.0	0.4	0.7	8.2	0.2	0.0
Initial Q Delay(d3), s/veh	0.0	0.0	0.0				0.0	0.0	0.0	0.0	0.0	0.0
%ile BackOfQ(50%),veh/ln	6.5	0.0	3.6				0.0	8.1	4.9	5.0	7.7	0.0
Unsig. Movement Delay, s/veh												
LnGrp Delay(d), s/veh	41.2	0.0	38.3				0.0	16.2	14.6	55.1	17.9	0.0
LnGrp LOS	D		D					B	B	E	B	
Approach Vol, veh/h		720						2119			1410	
Approach Delay, s/veh		40.6						15.9			27.2	
Approach LOS		D						B			C	

Timer - Assigned Phs	1	2		4		6
Phs Duration (G+Y+Rc), s	16.5	59.8		23.7		76.3
Change Period (Y+Rc), s	4.0	5.5		5.0		5.5
Max Green Setting (Gmax), s	14.0	39.5		32.0		57.5
Max Q Clear Time (g_c+I1), s	12.3	25.6		16.9		19.2
Green Ext Time (p_c), s	0.2	10.1		1.7		8.3

Intersection Summary	
HCM 7th Control Delay, s/veh	23.9
HCM 7th LOS	C

Notes

User approved volume balancing among the lanes for turning movement.

Lane Group	EBL	EBT	EBR	WBL	WBT	WBR	NBL	NBT	NBR	SBL	SBT	SBR
Lane Configurations												
Traffic Volume (vph)	490	225	157	106	236	283	373	1572	170	139	1017	492
Future Volume (vph)	490	225	157	106	236	283	373	1572	170	139	1017	492
Turn Type	Prot	NA	Perm	Prot	NA	Perm	Prot	NA	Perm	Prot	NA	Perm
Protected Phases	7	4		3	8		5	2		1	6	
Permitted Phases			4			8			2			6
Detector Phase	7	4	4	3	8	8	5	2	2	1	6	6
Switch Phase												
Minimum Initial (s)	5.0	10.0	10.0	5.0	10.0	10.0	5.0	10.0	10.0	5.0	10.0	10.0
Minimum Split (s)	9.6	43.4	43.4	9.6	43.4	43.4	9.6	37.8	37.8	9.6	32.8	32.8
Total Split (s)	22.3	53.7	53.7	12.0	43.4	43.4	18.2	44.0	44.0	10.3	36.1	36.1
Total Split (%)	18.6%	44.8%	44.8%	10.0%	36.2%	36.2%	15.2%	36.7%	36.7%	8.6%	30.1%	30.1%
Yellow Time (s)	3.6	4.4	4.4	3.6	4.4	4.4	3.6	4.8	4.8	3.6	4.8	4.8
All-Red Time (s)	1.0	1.0	1.0	1.0	1.0	1.0	1.0	1.0	1.0	1.0	1.0	1.0
Lost Time Adjust (s)	0.0	0.0	0.0	0.0	0.0	0.0	0.0	0.0	0.0	0.0	0.0	0.0
Total Lost Time (s)	4.6	5.4	5.4	4.6	5.4	5.4	4.6	5.8	5.8	4.6	5.8	5.8
Lead/Lag	Lead	Lag	Lag	Lead	Lag	Lag	Lead	Lag	Lag	Lead	Lag	Lag
Lead-Lag Optimize?	Yes	Yes	Yes	Yes	Yes	Yes	Yes	Yes	Yes	Yes	Yes	Yes
Recall Mode	None	None	None	None	None	None	None	Min	Min	None	Min	Min
Act Effct Green (s)	17.9	28.5	28.5	6.9	17.6	17.6	13.7	38.5	38.5	5.8	30.6	30.6
Actuated g/C Ratio	0.18	0.28	0.28	0.07	0.18	0.18	0.14	0.38	0.38	0.06	0.31	0.31
v/c Ratio	0.88	0.25	0.30	0.49	0.42	0.72	0.87	0.88	0.27	0.78	0.72	0.68
Control Delay (s/veh)	58.4	27.5	5.1	54.6	37.8	24.0	63.8	36.5	6.1	74.8	35.6	10.4
Queue Delay	0.0	0.0	0.0	0.0	0.0	0.0	0.0	0.0	0.0	0.0	0.0	0.0
Total Delay (s/veh)	58.4	27.5	5.1	54.6	37.8	24.0	63.8	36.5	6.1	74.8	35.6	10.4
LOS	E	C	A	D	D	C	E	D	A	E	D	B
Approach Delay (s/veh)		40.8			34.4			38.9			31.3	
Approach LOS		D			C			D			C	

Intersection Summary	
Cycle Length: 120	
Actuated Cycle Length: 100.3	
Natural Cycle: 115	
Control Type: Actuated-Uncoordinated	
Maximum v/c Ratio: 0.88	
Intersection Signal Delay (s/veh): 36.3	Intersection LOS: D
Intersection Capacity Utilization 76.7%	ICU Level of Service D
Analysis Period (min) 15	

Splits and Phases: 3: La Sierra Av. & Indiana Av./S. Indiana Av.

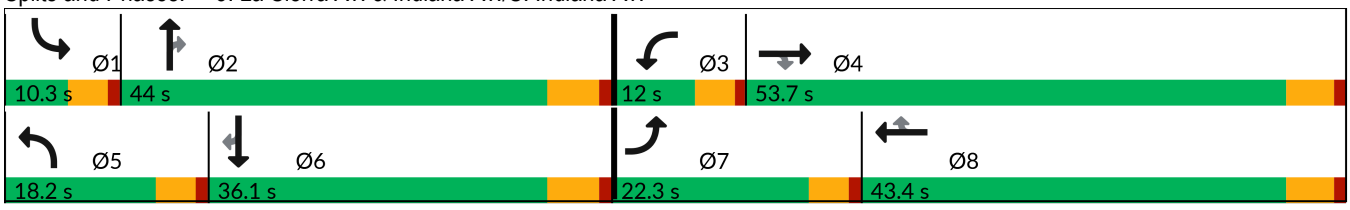

Movement	EBL	EBT	EBR	WBL	WBT	WBR	NBL	NBT	NBR	SBL	SBT	SBR
Lane Configurations												
Traffic Volume (veh/h)	490	225	157	106	236	283	373	1572	170	139	1017	492
Future Volume (veh/h)	490	225	157	106	236	283	373	1572	170	139	1017	492
Initial Q (Qb), veh	0	0	0	0	0	0	0	0	0	0	0	0
Lane Width Adj.	1.00	1.00	1.00	1.00	1.00	1.00	1.00	1.00	1.00	1.00	1.00	1.00
Ped-Bike Adj(A_pbT)	1.00		1.00	1.00		1.00	1.00		1.00	1.00		0.98
Parking Bus, Adj	1.00	1.00	1.00	1.00	1.00	1.00	1.00	1.00	1.00	1.00	1.00	1.00
Work Zone On Approach		No			No			No			No	
Adj Sat Flow, veh/h/ln	1870	1870	1870	1870	1870	1870	1870	1870	1870	1870	1870	1870
Adj Flow Rate, veh/h	538	247	120	116	259	231	410	1727	123	153	1118	316
Peak Hour Factor	0.91	0.91	0.91	0.91	0.91	0.91	0.91	0.91	0.91	0.91	0.91	0.91
Percent Heavy Veh, %	2	2	2	2	2	2	2	2	2	2	2	2
Cap, veh/h	598	1115	497	177	682	303	467	1918	594	196	1516	460
Arrive On Green	0.17	0.31	0.31	0.05	0.19	0.19	0.14	0.38	0.38	0.06	0.30	0.30
Sat Flow, veh/h	3456	3554	1584	3456	3554	1578	3456	5106	1583	3456	5106	1550
Grp Volume(v), veh/h	538	247	120	116	259	231	410	1727	123	153	1118	316
Grp Sat Flow(s),veh/h/ln	1728	1777	1584	1728	1777	1578	1728	1702	1583	1728	1702	1550
Q Serve(g_s), s	15.3	5.2	5.7	3.3	6.4	13.9	11.7	32.1	5.3	4.4	19.8	18.1
Cycle Q Clear(g_c), s	15.3	5.2	5.7	3.3	6.4	13.9	11.7	32.1	5.3	4.4	19.8	18.1
Prop In Lane	1.00		1.00	1.00		1.00	1.00		1.00	1.00		1.00
Lane Grp Cap(c), veh/h	598	1115	497	177	682	303	467	1918	594	196	1516	460
V/C Ratio(X)	0.90	0.22	0.24	0.66	0.38	0.76	0.88	0.90	0.21	0.78	0.74	0.69
Avail Cap(c_a), veh/h	608	1707	760	254	1343	596	467	1939	601	196	1538	467
HCM Platoon Ratio	1.00	1.00	1.00	1.00	1.00	1.00	1.00	1.00	1.00	1.00	1.00	1.00
Upstream Filter(I)	1.00	1.00	1.00	1.00	1.00	1.00	1.00	1.00	1.00	1.00	1.00	1.00
Uniform Delay (d), s/veh	40.7	25.4	25.6	46.9	35.4	38.5	42.7	29.6	21.3	46.8	31.8	31.2
Incr Delay (d2), s/veh	15.8	0.1	0.2	1.6	0.3	4.0	16.4	6.3	0.2	16.8	2.0	4.6
Initial Q Delay(d3), s/veh	0.0	0.0	0.0	0.0	0.0	0.0	0.0	0.0	0.0	0.0	0.0	0.0
%ile BackOfQ(50%),veh/ln	7.6	2.1	2.1	1.4	2.7	5.5	5.9	13.2	1.9	2.3	8.0	7.1
Unsig. Movement Delay, s/veh												
LnGrp Delay(d), s/veh	56.5	25.5	25.9	48.4	35.8	42.4	59.1	36.0	21.5	63.6	33.9	35.8
LnGrp LOS	E	C	C	D	D	D	E	D	C	E	C	D
Approach Vol, veh/h		905			606			2260			1587	
Approach Delay, s/veh		44.0			40.7			39.4			37.1	
Approach LOS		D			D			D			D	

Timer - Assigned Phs	1	2	3	4	5	6	7	8
Phs Duration (G+Y+Rc), s	10.3	43.6	9.7	37.0	18.2	35.7	22.0	24.7
Change Period (Y+Rc), s	4.6	5.8	4.6	5.4	4.6	5.8	4.6	5.4
Max Green Setting (Gmax), s	5.7	38.2	7.4	48.3	13.6	30.3	17.7	38.0
Max Q Clear Time (g_c+I1), s	6.4	34.1	5.3	7.7	13.7	21.8	17.3	15.9
Green Ext Time (p_c), s	0.0	3.7	0.0	2.0	0.0	6.0	0.1	2.3

Intersection Summary	
HCM 7th Control Delay, s/veh	39.6
HCM 7th LOS	D

Lane Group	EBL	EBT	EBR	WBL	WBT	WBR	NBL	NBT	SBL	SBT
Lane Configurations										
Traffic Volume (vph)	52	87	63	75	105	227	46	1181	119	596
Future Volume (vph)	52	87	63	75	105	227	46	1181	119	596
Turn Type	Prot	NA	Perm	Prot	NA	Perm	Prot	NA	Prot	NA
Protected Phases	7	4		3	8		5	2	1	6
Permitted Phases			4			8				
Detector Phase	7	4	4	3	8	8	5	2	1	6
Switch Phase										
Minimum Initial (s)	5.0	10.0	10.0	5.0	10.0	10.0	5.0	10.0	5.0	10.0
Minimum Split (s)	9.6	34.1	34.1	9.6	33.8	33.8	9.6	35.8	9.6	33.8
Total Split (s)	9.9	34.2	34.2	12.0	36.3	36.3	13.4	58.8	15.0	60.4
Total Split (%)	8.3%	28.5%	28.5%	10.0%	30.3%	30.3%	11.2%	49.0%	12.5%	50.3%
Yellow Time (s)	3.6	4.1	4.1	3.6	4.8	4.8	3.6	4.8	3.6	4.8
All-Red Time (s)	1.0	1.0	1.0	1.0	1.0	1.0	1.0	1.0	1.0	1.0
Lost Time Adjust (s)	0.0	0.0	0.0	0.0	0.0	0.0	0.0	0.0	0.0	0.0
Total Lost Time (s)	4.6	5.1	5.1	4.6	5.8	5.8	4.6	5.8	4.6	5.8
Lead/Lag	Lead	Lag	Lag	Lead	Lag	Lag	Lead	Lag	Lead	Lag
Lead-Lag Optimize?	Yes	Yes	Yes	Yes	Yes	Yes	Yes	Yes	Yes	Yes
Recall Mode	None	None	None	None	None	None	None	Min	None	Min
Act Effct Green (s)	5.3	14.2	14.2	7.2	17.5	17.5	7.2	53.3	10.2	58.3
Actuated g/C Ratio	0.05	0.14	0.14	0.07	0.17	0.17	0.07	0.51	0.10	0.55
v/c Ratio	0.34	0.39	0.23	0.69	0.38	0.63	0.43	0.89	0.78	0.36
Control Delay (s/veh)	56.0	45.4	3.9	77.9	43.3	21.5	59.9	31.5	77.3	15.3
Queue Delay	0.0	0.0	0.0	0.0	0.0	0.0	0.0	0.0	0.0	0.0
Total Delay (s/veh)	56.0	45.4	3.9	77.9	43.3	21.5	59.9	31.5	77.3	15.3
LOS	E	D	A	E	D	C	E	C	E	B
Approach Delay (s/veh)		35.1			37.5			32.4		25.2
Approach LOS		D			D			C		C

Intersection Summary	
Cycle Length: 120	
Actuated Cycle Length: 105.1	
Natural Cycle: 120	
Control Type: Actuated-Uncoordinated	
Maximum v/c Ratio: 0.89	
Intersection Signal Delay (s/veh): 31.4	Intersection LOS: C
Intersection Capacity Utilization 72.7%	ICU Level of Service C
Analysis Period (min) 15	

Splits and Phases: 4: La Sierra Av. & Victoria Av.

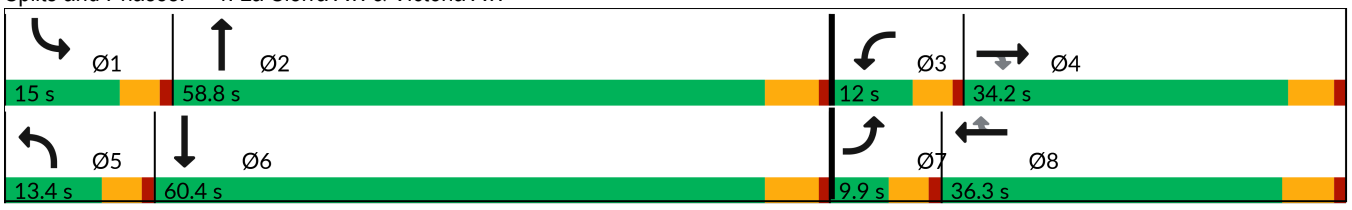

Movement	EBL	EBT	EBR	WBL	WBT	WBR	NBL	NBT	NBR	SBL	SBT	SBR
Lane Configurations												
Traffic Volume (veh/h)	52	87	63	75	105	227	46	1181	212	119	596	29
Future Volume (veh/h)	52	87	63	75	105	227	46	1181	212	119	596	29
Initial Q (Qb), veh	0	0	0	0	0	0	0	0	0	0	0	0
Lane Width Adj.	1.00	1.00	1.00	1.00	1.00	1.00	1.00	1.00	1.00	1.00	1.00	1.00
Ped-Bike Adj(A_pbT)	1.00		0.99	1.00		0.98	1.00		1.00	1.00		1.00
Parking Bus, Adj	1.00	1.00	1.00	1.00	1.00	1.00	1.00	1.00	1.00	1.00	1.00	1.00
Work Zone On Approach		No			No			No			No	
Adj Sat Flow, veh/h/ln	1870	1870	1870	1870	1870	1870	1870	1870	1870	1870	1870	1870
Adj Flow Rate, veh/h	58	98	32	84	118	170	52	1327	209	134	670	32
Peak Hour Factor	0.89	0.89	0.89	0.89	0.89	0.89	0.89	0.89	0.89	0.89	0.89	0.89
Percent Heavy Veh, %	2	2	2	2	2	2	2	2	2	2	2	2
Cap, veh/h	141	234	196	107	271	224	69	1563	244	164	1936	92
Arrive On Green	0.04	0.13	0.13	0.06	0.14	0.14	0.04	0.51	0.51	0.09	0.56	0.56
Sat Flow, veh/h	3456	1870	1563	1781	1870	1551	1781	3080	481	1781	3453	165
Grp Volume(v), veh/h	58	98	32	84	118	170	52	760	776	134	345	357
Grp Sat Flow(s),veh/h/ln	1728	1870	1563	1781	1870	1551	1781	1777	1784	1781	1777	1841
Q Serve(g_s), s	1.6	4.7	1.8	4.5	5.6	10.2	2.8	35.7	36.7	7.2	10.2	10.2
Cycle Q Clear(g_c), s	1.6	4.7	1.8	4.5	5.6	10.2	2.8	35.7	36.7	7.2	10.2	10.2
Prop In Lane	1.00		1.00	1.00		1.00	1.00		0.27	1.00		0.09
Lane Grp Cap(c), veh/h	141	234	196	107	271	224	69	902	905	164	996	1032
V/C Ratio(X)	0.41	0.42	0.16	0.78	0.44	0.76	0.75	0.84	0.86	0.82	0.35	0.35
Avail Cap(c_a), veh/h	189	562	470	136	589	489	162	973	977	191	1002	1038
HCM Platoon Ratio	1.00	1.00	1.00	1.00	1.00	1.00	1.00	1.00	1.00	1.00	1.00	1.00
Upstream Filter(I)	1.00	1.00	1.00	1.00	1.00	1.00	1.00	1.00	1.00	1.00	1.00	1.00
Uniform Delay (d), s/veh	45.3	39.1	37.8	44.9	37.8	39.8	46.1	20.5	20.8	43.1	11.6	11.6
Incr Delay (d2), s/veh	0.7	1.2	0.4	15.5	1.1	5.2	6.0	6.8	7.6	18.0	0.3	0.3
Initial Q Delay(d3), s/veh	0.0	0.0	0.0	0.0	0.0	0.0	0.0	0.0	0.0	0.0	0.0	0.0
%ile BackOfQ(50%),veh/ln	0.7	2.2	0.7	2.4	2.5	4.0	1.3	14.6	15.2	3.8	3.6	3.7
Unsig. Movement Delay, s/veh												
LnGrp Delay(d), s/veh	46.0	40.3	38.2	60.3	38.9	45.0	52.0	27.4	28.4	61.1	11.9	11.9
LnGrp LOS	D	D	D	E	D	D	D	C	C	E	B	B
Approach Vol, veh/h		188			372			1588			836	
Approach Delay, s/veh		41.7			46.5			28.7			19.8	
Approach LOS		D			D			C			B	

Timer - Assigned Phs	1	2	3	4	5	6	7	8
Phs Duration (G+Y+Rc), s	13.5	54.9	10.4	17.9	8.4	60.1	8.5	19.8
Change Period (Y+Rc), s	4.6	5.8	4.6	* 5.8	4.6	5.8	4.6	5.8
Max Green Setting (Gmax), s	10.4	53.0	7.4	* 29	8.8	54.6	5.3	30.5
Max Q Clear Time (g_c+I1), s	9.2	38.7	6.5	6.7	4.8	12.2	3.6	12.2
Green Ext Time (p_c), s	0.0	10.5	0.0	0.5	0.0	6.6	0.0	1.0

Intersection Summary	
HCM 7th Control Delay, s/veh	29.2
HCM 7th LOS	C

Notes

* HCM 7th computational engine requires equal clearance times for the phases crossing the barrier.

Lane Group	WBL	WBR	NBT	NBR	SBL	SBT
Lane Configurations						
Traffic Volume (vph)	20	257	1270	25	89	584
Future Volume (vph)	20	257	1270	25	89	584
Turn Type	Prot	Perm	NA	Perm	Prot	NA
Protected Phases	8		2		1	6
Permitted Phases		8		2		
Detector Phase	8	8	2	2	1	6
Switch Phase						
Minimum Initial (s)	10.0	10.0	10.0	10.0	5.0	10.0
Minimum Split (s)	33.4	33.4	27.5	27.5	9.6	16.5
Total Split (s)	36.0	36.0	64.0	64.0	20.0	84.0
Total Split (%)	30.0%	30.0%	53.3%	53.3%	16.7%	70.0%
Yellow Time (s)	4.4	4.4	5.5	5.5	3.6	5.5
All-Red Time (s)	1.0	1.0	1.0	1.0	1.0	1.0
Lost Time Adjust (s)	0.0	0.0	0.0	0.0	0.0	0.0
Total Lost Time (s)	5.4	5.4	6.5	6.5	4.6	6.5
Lead/Lag			Lag	Lag	Lead	
Lead-Lag Optimize?			Yes	Yes	Yes	
Recall Mode	None	None	Min	Min	None	Min
Act Effct Green (s)	13.7	13.7	44.8	44.8	9.8	56.3
Actuated g/C Ratio	0.17	0.17	0.54	0.54	0.12	0.68
v/c Ratio	0.08	0.62	0.75	0.03	0.48	0.27
Control Delay (s/veh)	34.9	14.5	19.3	7.1	47.6	5.6
Queue Delay	0.0	0.0	0.0	0.0	0.0	0.0
Total Delay (s/veh)	34.9	14.5	19.3	7.1	47.6	5.6
LOS	C	B	B	A	D	A
Approach Delay (s/veh)	16.0		19.1			11.2
Approach LOS	B		B			B

Intersection Summary	
Cycle Length: 120	
Actuated Cycle Length: 82.8	
Natural Cycle: 90	
Control Type: Actuated-Uncoordinated	
Maximum v/c Ratio: 0.75	
Intersection Signal Delay (s/veh): 16.3	Intersection LOS: B
Intersection Capacity Utilization 62.1%	ICU Level of Service B
Analysis Period (min) 15	

Splits and Phases: 5: La Sierra Av. & McAllister Pkwy.

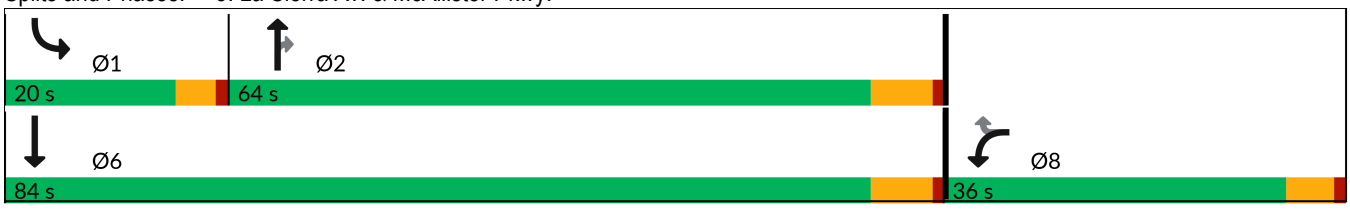



Movement	WBL	WBR	NBT	NBR	SBL	SBT
Lane Configurations						
Traffic Volume (veh/h)	20	257	1270	25	89	584
Future Volume (veh/h)	20	257	1270	25	89	584
Initial Q (Qb), veh	0	0	0	0	0	0
Lane Width Adj.	1.00	1.00	1.00	1.00	1.00	1.00
Ped-Bike Adj(A_pbT)	1.00	1.00		1.00	1.00	
Parking Bus, Adj	1.00	1.00	1.00	1.00	1.00	1.00
Work Zone On Approach	No		No			No
Adj Sat Flow, veh/h/ln	1870	1870	1870	1870	1870	1870
Adj Flow Rate, veh/h	22	171	1427	25	100	656
Peak Hour Factor	0.89	0.89	0.89	0.89	0.89	0.89
Percent Heavy Veh, %	2	2	2	2	2	2
Cap, veh/h	244	217	1997	891	129	2481
Arrive On Green	0.14	0.14	0.56	0.56	0.07	0.70
Sat Flow, veh/h	1781	1585	3647	1585	1781	3647
Grp Volume(v), veh/h	22	171	1427	25	100	656
Grp Sat Flow(s),veh/h/ln	1781	1585	1777	1585	1781	1777
Q Serve(g_s), s	0.8	7.5	21.2	0.5	4.0	4.9
Cycle Q Clear(g_c), s	0.8	7.5	21.2	0.5	4.0	4.9
Prop In Lane	1.00	1.00		1.00	1.00	
Lane Grp Cap(c), veh/h	244	217	1997	891	129	2481
V/C Ratio(X)	0.09	0.79	0.71	0.03	0.77	0.26
Avail Cap(c_a), veh/h	756	673	2833	1264	380	3819
HCM Platoon Ratio	1.00	1.00	1.00	1.00	1.00	1.00
Upstream Filter(I)	1.00	1.00	1.00	1.00	1.00	1.00
Uniform Delay (d), s/veh	27.2	30.1	11.6	7.0	32.9	4.0
Incr Delay (d2), s/veh	0.2	6.3	0.7	0.0	3.7	0.1
Initial Q Delay(d3), s/veh	0.0	0.0	0.0	0.0	0.0	0.0
%ile BackOfQ(50%),veh/ln	0.3	0.4	5.9	0.1	1.7	0.8
Unsig. Movement Delay, s/veh						
LnGrp Delay(d), s/veh	27.4	36.4	12.3	7.0	36.6	4.1
LnGrp LOS	C	D	B	A	D	A
Approach Vol, veh/h	193		1452			756
Approach Delay, s/veh	35.4		12.2			8.4
Approach LOS	D		B			A

Timer - Assigned Phs	1	2			6	8
Phs Duration (G+Y+Rc), s	9.8	47.0			56.9	15.3
Change Period (Y+Rc), s	4.6	6.5			6.5	5.4
Max Green Setting (Gmax), s	15.4	57.5			77.5	30.6
Max Q Clear Time (g_c+I1), s	6.0	23.2			6.9	9.5
Green Ext Time (p_c), s	0.1	17.3			6.6	0.5

Intersection Summary	
HCM 7th Control Delay, s/veh	12.9
HCM 7th LOS	B

Intersection	
Intersection Delay, s/veh	28.8
Intersection LOS	D

Movement	WBL	WBR	NBT	NBR	SBL	SBT
Lane Configurations						
Traffic Vol, veh/h	71	552	122	25	270	143
Future Vol, veh/h	71	552	122	25	270	143
Peak Hour Factor	0.95	0.95	0.95	0.95	0.95	0.95
Heavy Vehicles, %	2	2	2	2	2	2
Mvmt Flow	75	581	128	26	284	151
Number of Lanes	1	0	2	0	1	1

Approach	WB	NB	SB
Opposing Approach		SB	NB
Opposing Lanes	0	2	2
Conflicting Approach Left	NB		WB
Conflicting Lanes Left	2	0	1
Conflicting Approach Right	SB	WB	
Conflicting Lanes Right	2	1	0
HCM Control Delay, s/veh	41.1	11.2	16.6
HCM LOS	E	B	C

Lane	NBLn1	NBLn2	WBLn1	SBLn1	SBLn2
Vol Left, %	0%	0%	11%	100%	0%
Vol Thru, %	100%	62%	0%	0%	100%
Vol Right, %	0%	38%	89%	0%	0%
Sign Control	Stop	Stop	Stop	Stop	Stop
Traffic Vol by Lane	81	66	623	270	143
LT Vol	0	0	71	270	0
Through Vol	81	41	0	0	143
RT Vol	0	25	552	0	0
Lane Flow Rate	86	69	656	284	151
Geometry Grp	5	5	2	5	5
Degree of Util (X)	0.171	0.133	0.928	0.567	0.279
Departure Headway (Hd)	7.192	6.918	5.093	7.188	6.676
Convergence, Y/N	Yes	Yes	Yes	Yes	Yes
Cap	496	516	708	500	536
Service Time	4.975	4.7	3.151	4.953	4.44
HCM Lane V/C Ratio	0.173	0.134	0.927	0.568	0.282
HCM Control Delay, s/veh	11.5	10.8	41.1	19	12
HCM Lane LOS	B	B	E	C	B
HCM 95th-tile Q	0.6	0.5	12.8	3.5	1.1

Intersection	
Intersection Delay, s/veh	12.5
Intersection LOS	B

Movement	EBL	EBT	WBT	WBR	SBL	SBR
Lane Configurations						
Traffic Vol, veh/h	55	260	540	111	57	79
Future Vol, veh/h	55	260	540	111	57	79
Peak Hour Factor	0.96	0.96	0.96	0.96	0.96	0.96
Heavy Vehicles, %	2	2	2	2	2	2
Mvmt Flow	57	271	563	116	59	82
Number of Lanes	1	1	2	0	1	0

Approach	EB	WB	SB
Opposing Approach	WB	EB	
Opposing Lanes	2	2	0
Conflicting Approach Left	SB		WB
Conflicting Lanes Left	1	0	2
Conflicting Approach Right		SB	EB
Conflicting Lanes Right	0	1	2
HCM Control Delay, s/veh	12.2	13.1	10.5
HCM LOS	B	B	B

Lane	EBLn1	EBLn2	WBLn1	WBLn2	SBLn1
Vol Left, %	100%	0%	0%	0%	42%
Vol Thru, %	0%	100%	100%	62%	0%
Vol Right, %	0%	0%	0%	38%	58%
Sign Control	Stop	Stop	Stop	Stop	Stop
Traffic Vol by Lane	55	260	360	291	136
LT Vol	55	0	0	0	57
Through Vol	0	260	360	180	0
RT Vol	0	0	0	111	79
Lane Flow Rate	57	271	375	303	142
Geometry Grp	5	5	5	5	2
Degree of Util (X)	0.097	0.43	0.549	0.421	0.228
Departure Headway (Hd)	6.233	5.716	5.27	5.001	5.784
Convergence, Y/N	Yes	Yes	Yes	Yes	Yes
Cap	579	634	675	709	625
Service Time	3.933	3.428	3.068	2.798	3.784
HCM Lane V/C Ratio	0.098	0.427	0.556	0.427	0.227
HCM Control Delay, s/veh	9.6	12.7	14.4	11.5	10.5
HCM Lane LOS	A	B	B	B	B
HCM 95th-tile Q	0.3	2.2	3.4	2.1	0.9

Intersection	
Int Delay, s/veh	1.1

Movement	EBL	EBT	WBT	WBR	SBL	SBR
Lane Configurations						
Traffic Vol, veh/h	20	297	593	3	8	58
Future Vol, veh/h	20	297	593	3	8	58
Conflicting Peds, #/hr	0	0	0	0	0	0
Sign Control	Free	Free	Free	Free	Stop	Stop
RT Channelized	-	None	-	None	-	None
Storage Length	100	-	-	-	0	-
Veh in Median Storage, #	-	0	0	-	1	-
Grade, %	-	0	0	-	0	-
Peak Hour Factor	92	92	92	92	92	92
Heavy Vehicles, %	2	2	2	2	2	2
Mvmt Flow	22	323	645	3	9	63

Major/Minor	Major1		Major2		Minor2	
Conflicting Flow All	648	0	-	0	1013	646
Stage 1	-	-	-	-	646	-
Stage 2	-	-	-	-	366	-
Critical Hdwy	4.12	-	-	-	6.42	6.22
Critical Hdwy Stg 1	-	-	-	-	5.42	-
Critical Hdwy Stg 2	-	-	-	-	5.42	-
Follow-up Hdwy	2.218	-	-	-	3.518	3.318
Pot Cap-1 Maneuver	938	-	-	-	265	471
Stage 1	-	-	-	-	522	-
Stage 2	-	-	-	-	701	-
Platoon blocked, %			-	-	-	
Mov Cap-1 Maneuver	938	-	-	-	259	471
Mov Cap-2 Maneuver	-	-	-	-	382	-
Stage 1	-	-	-	-	510	-
Stage 2	-	-	-	-	701	-

Approach	EB	WB	SB
HCM Control Delay, s/v	0.56	0	14.3
HCM LOS			B

Minor Lane/Major Mvmt	EBL	EBT	WBT	WBR	SBLn1
Capacity (veh/h)	938	-	-	-	459
HCM Lane V/C Ratio	0.023	-	-	-	0.156
HCM Control Delay (s/veh)	8.9	-	-	-	14.3
HCM Lane LOS	A	-	-	-	B
HCM 95th %tile Q(veh)	0.1	-	-	-	0.6

Lane Group	WBL	WBT	WBR	NBL	NBT	SBT	SBR
Lane Configurations							
Traffic Volume (vph)	527	2	589	426	1016	1534	301
Future Volume (vph)	527	2	589	426	1016	1534	301
Turn Type	Split	NA	Perm	Prot	NA	NA	Perm
Protected Phases	8	8		5	2	6	
Permitted Phases			8				6
Detector Phase	8	8	8	5	2	6	6
Switch Phase							
Minimum Initial (s)	5.0	5.0	5.0	5.0	5.0	5.0	5.0
Minimum Split (s)	10.0	10.0	10.0	9.0	26.5	29.5	29.5
Total Split (s)	39.0	39.0	39.0	20.0	61.0	41.0	41.0
Total Split (%)	39.0%	39.0%	39.0%	20.0%	61.0%	41.0%	41.0%
Yellow Time (s)	4.0	4.0	4.0	3.0	4.5	4.5	4.5
All-Red Time (s)	1.0	1.0	1.0	1.0	1.0	1.0	1.0
Lost Time Adjust (s)	0.0	0.0	0.0	0.0	0.0	0.0	0.0
Total Lost Time (s)	5.0	5.0	5.0	4.0	5.5	5.5	5.5
Lead/Lag				Lead		Lag	Lag
Lead-Lag Optimize?				Yes		Yes	Yes
Recall Mode	None	None	None	None	C-Min	C-Min	C-Min
Act Effct Green (s)	29.2	29.2	29.2	15.6	60.3	40.7	40.7
Actuated g/C Ratio	0.29	0.29	0.29	0.16	0.60	0.41	0.41
v/c Ratio	0.82	0.75	0.73	0.83	0.34	0.76	0.41
Control Delay (s/veh)	46.6	33.4	32.0	39.7	24.2	29.6	10.4
Queue Delay	0.0	0.0	0.0	0.0	0.0	0.0	0.0
Total Delay (s/veh)	46.6	33.4	32.0	39.7	24.2	29.6	10.4
LOS	D	C	C	D	C	C	B
Approach Delay (s/veh)		37.6			28.8	26.4	
Approach LOS		D			C	C	

Intersection Summary	
Cycle Length: 100	
Actuated Cycle Length: 100	
Offset: 0 (0%), Referenced to phase 2:NBT and 6:SBT, Start of Yellow, Master Intersection	
Natural Cycle: 70	
Control Type: Actuated-Coordinated	
Maximum v/c Ratio: 0.83	
Intersection Signal Delay (s/veh): 30.0	Intersection LOS: C
Intersection Capacity Utilization 77.3%	ICU Level of Service D
Analysis Period (min) 15	

Splits and Phases: 1: La Sierra Av. & SR-91 WB Ramps

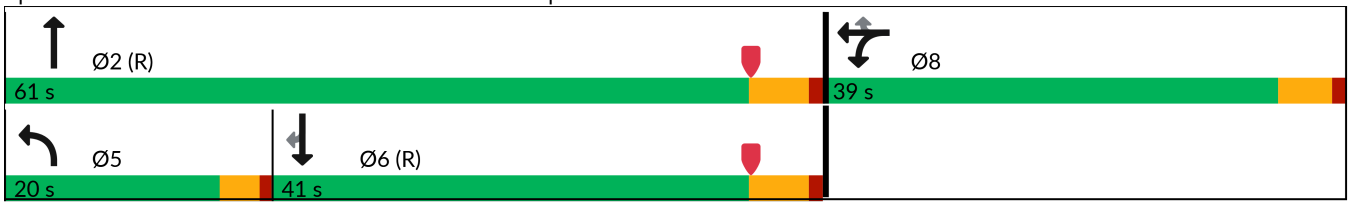

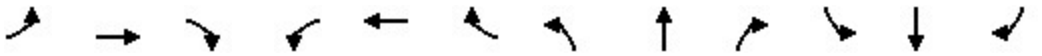

Movement	EBL	EBT	EBR	WBL	WBT	WBR	NBL	NBT	NBR	SBL	SBT	SBR
Lane Configurations												
Traffic Volume (veh/h)	0	0	0	527	2	589	426	1016	0	0	1534	301
Future Volume (veh/h)	0	0	0	527	2	589	426	1016	0	0	1534	301
Initial Q (Qb), veh				0	0	0	0	0	0	0	0	0
Lane Width Adj.				1.00	1.00	1.00	1.00	1.00	1.00	1.00	1.00	1.00
Ped-Bike Adj(A_pbT)				1.00		1.00	1.00		1.00	1.00		0.98
Parking Bus, Adj				1.00	1.00	1.00	1.00	1.00	1.00	1.00	1.00	1.00
Work Zone On Approach					No			No			No	
Adj Sat Flow, veh/h/ln				1870	1900	1900	1856	1885	0	0	1885	1900
Adj Flow Rate, veh/h				666	0	263	439	1047	0	0	1581	224
Peak Hour Factor				0.97	0.97	0.97	0.97	0.97	0.97	0.97	0.97	0.97
Percent Heavy Veh, %				2	0	0	3	1	0	0	1	0
Cap, veh/h				789	0	357	495	3466	0	0	2517	775
Arrive On Green				0.22	0.00	0.22	0.29	1.00	0.00	0.00	0.49	0.49
Sat Flow, veh/h				3563	0	1610	3428	5316	0	0	5316	1584
Grp Volume(v), veh/h				666	0	263	439	1047	0	0	1581	224
Grp Sat Flow(s),veh/h/ln				1781	0	1610	1714	1716	0	0	1716	1584
Q Serve(g_s), s				17.9	0.0	15.2	12.2	0.0	0.0	0.0	22.7	8.4
Cycle Q Clear(g_c), s				17.9	0.0	15.2	12.2	0.0	0.0	0.0	22.7	8.4
Prop In Lane				1.00		1.00	1.00		0.00	0.00		1.00
Lane Grp Cap(c), veh/h				789	0	357	495	3466	0	0	2517	775
V/C Ratio(X)				0.84	0.00	0.74	0.89	0.30	0.00	0.00	0.63	0.29
Avail Cap(c_a), veh/h				1211	0	547	549	3466	0	0	2517	775
HCM Platoon Ratio				1.00	1.00	1.00	2.00	2.00	1.00	1.00	1.00	1.00
Upstream Filter(I)				1.00	0.00	1.00	0.65	0.65	0.00	0.00	1.00	1.00
Uniform Delay (d), s/veh				37.3	0.0	36.2	34.8	0.0	0.0	0.0	18.8	15.2
Incr Delay (d2), s/veh				2.9	0.0	2.2	9.8	0.1	0.0	0.0	1.2	0.9
Initial Q Delay(d3), s/veh				0.0	0.0	0.0	0.0	0.0	0.0	0.0	0.0	0.0
%ile BackOfQ(50%),veh/ln				7.7	0.0	5.9	4.8	0.0	0.0	0.0	8.4	3.0
Unsig. Movement Delay, s/veh												
LnGrp Delay(d), s/veh				40.2	0.0	38.5	44.6	0.1	0.0	0.0	20.0	16.1
LnGrp LOS				D		D	D	A			C	B
Approach Vol, veh/h					929			1486			1805	
Approach Delay, s/veh					39.7			13.3			19.6	
Approach LOS					D			B			B	

Timer - Assigned Phs	2		5	6		8						
Phs Duration (G+Y+Rc), s	72.9		18.4	54.4		27.1						
Change Period (Y+Rc), s	5.5		4.0	5.5		5.0						
Max Green Setting (Gmax), s	55.5		16.0	35.5		34.0						
Max Q Clear Time (g_c+I1), s	2.0		14.2	24.7		19.9						
Green Ext Time (p_c), s	8.4		0.2	7.5		2.2						

Intersection Summary		
HCM 7th Control Delay, s/veh	21.8	
HCM 7th LOS	C	

Notes

User approved volume balancing among the lanes for turning movement.

Lane Group	EBL	EBT	EBR	NBT	NBR	SBL	SBT
Lane Configurations							
Traffic Volume (vph)	225	11	907	1203	332	456	1610
Future Volume (vph)	225	11	907	1203	332	456	1610
Turn Type	Split	NA	Perm	NA	Perm	Prot	NA
Protected Phases	4	4		2		1	6
Permitted Phases			4		2		
Detector Phase	4	4	4	2	2	1	6
Switch Phase							
Minimum Initial (s)	5.0	5.0	5.0	5.0	5.0	5.0	5.0
Minimum Split (s)	10.0	10.0	10.0	29.5	29.5	9.0	26.5
Total Split (s)	48.0	48.0	48.0	33.0	33.0	19.0	52.0
Total Split (%)	48.0%	48.0%	48.0%	33.0%	33.0%	19.0%	52.0%
Yellow Time (s)	4.0	4.0	4.0	4.5	4.5	3.0	4.5
All-Red Time (s)	1.0	1.0	1.0	1.0	1.0	1.0	1.0
Lost Time Adjust (s)	0.0	0.0	0.0	0.0	0.0	0.0	0.0
Total Lost Time (s)	5.0	5.0	5.0	5.5	5.5	4.0	5.5
Lead/Lag				Lag	Lag	Lead	
Lead-Lag Optimize?				Yes	Yes	Yes	
Recall Mode	None	None	None	C-Min	C-Min	None	C-Min
Act Effct Green (s)	37.9	37.9	37.9	31.6	31.6	16.0	51.6
Actuated g/C Ratio	0.38	0.38	0.38	0.32	0.32	0.16	0.52
v/c Ratio	0.33	0.87	0.79	0.77	0.47	0.85	0.62
Control Delay (s/veh)	22.4	44.8	33.0	35.9	5.6	34.9	11.9
Queue Delay	0.0	0.0	0.0	0.0	0.0	0.0	0.4
Total Delay (s/veh)	22.4	44.8	33.0	35.9	5.6	34.9	12.3
LOS	C	D	C	D	A	C	B
Approach Delay (s/veh)		35.9		29.3			17.3
Approach LOS		D		C			B

Intersection Summary	
Cycle Length: 100	
Actuated Cycle Length: 100	
Offset: 28 (28%), Referenced to phase 2:NBT and 6:SBT, Start of Yellow	
Natural Cycle: 75	
Control Type: Actuated-Coordinated	
Maximum v/c Ratio: 0.87	
Intersection Signal Delay (s/veh): 25.7	Intersection LOS: C
Intersection Capacity Utilization 77.3%	ICU Level of Service D
Analysis Period (min) 15	

Splits and Phases: 2: La Sierra Av. & SR-91 EB Ramps

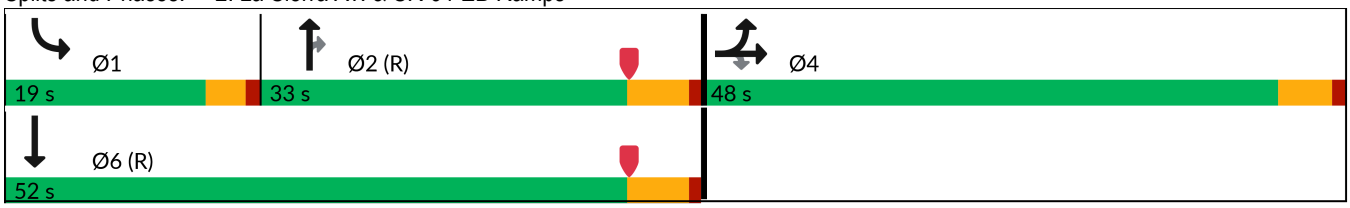

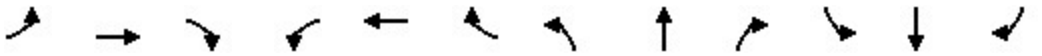

Movement	EBL	EBT	EBR	WBL	WBT	WBR	NBL	NBT	NBR	SBL	SBT	SBR
Lane Configurations												
Traffic Volume (veh/h)	225	11	907	0	0	0	0	1203	332	456	1610	0
Future Volume (veh/h)	225	11	907	0	0	0	0	1203	332	456	1610	0
Initial Q (Qb), veh	0	0	0				0	0	0	0	0	0
Lane Width Adj.	1.00	1.00	1.00				1.00	1.00	1.00	1.00	1.00	1.00
Ped-Bike Adj(A_pbT)	1.00		1.00				1.00		0.98	1.00		1.00
Parking Bus, Adj	1.00	1.00	1.00				1.00	1.00	1.00	1.00	1.00	1.00
Work Zone On Approach		No						No			No	
Adj Sat Flow, veh/h/ln	1870	1752	1856				0	1870	1885	1870	1885	0
Adj Flow Rate, veh/h	157	0	776				0	1228	201	465	1643	0
Peak Hour Factor	0.98	0.98	0.98				0.98	0.98	0.98	0.98	0.98	0.98
Percent Heavy Veh, %	2	10	3				0	2	1	2	1	0
Cap, veh/h	502	0	887				0	2159	665	518	3154	0
Arrive On Green	0.28	0.00	0.28				0.00	0.42	0.42	0.05	0.20	0.00
Sat Flow, veh/h	1781	0	3145				0	5274	1572	3456	5316	0
Grp Volume(v), veh/h	157	0	776				0	1228	201	465	1643	0
Grp Sat Flow(s),veh/h/ln	1781	0	1572				0	1702	1572	1728	1716	0
Q Serve(g_s), s	6.9	0.0	23.5				0.0	18.3	8.5	13.4	28.5	0.0
Cycle Q Clear(g_c), s	6.9	0.0	23.5				0.0	18.3	8.5	13.4	28.5	0.0
Prop In Lane	1.00		1.00				0.00		1.00	1.00		0.00
Lane Grp Cap(c), veh/h	502	0	887				0	2159	665	518	3154	0
V/C Ratio(X)	0.31	0.00	0.87				0.00	0.57	0.30	0.90	0.52	0.00
Avail Cap(c_a), veh/h	766	0	1352				0	2159	665	518	3154	0
HCM Platoon Ratio	1.00	1.00	1.00				1.00	1.00	1.00	0.33	0.33	1.00
Upstream Filter(I)	1.00	0.00	1.00				0.00	0.67	0.67	0.55	0.55	0.00
Uniform Delay (d), s/veh	28.3	0.0	34.2				0.0	21.9	19.1	46.8	26.8	0.0
Incr Delay (d2), s/veh	0.3	0.0	3.8				0.0	0.7	0.8	11.1	0.3	0.0
Initial Q Delay(d3), s/veh	0.0	0.0	0.0				0.0	0.0	0.0	0.0	0.0	0.0
%ile BackOfQ(50%),veh/ln	2.9	0.0	8.9				0.0	6.9	3.0	6.9	13.0	0.0
Unsig. Movement Delay, s/veh												
LnGrp Delay(d), s/veh	28.5	0.0	38.0				0.0	22.7	19.9	57.9	27.1	0.0
LnGrp LOS	C		D					C	B	E	C	
Approach Vol, veh/h		933						1429			2108	
Approach Delay, s/veh		36.4						22.3			33.9	
Approach LOS		D						C			C	

Timer - Assigned Phs	1	2		4		6
Phs Duration (G+Y+Rc), s	19.0	47.8		33.2		66.8
Change Period (Y+Rc), s	4.0	5.5		5.0		5.5
Max Green Setting (Gmax), s	15.0	27.5		43.0		46.5
Max Q Clear Time (g_c+I1), s	15.4	20.3		25.5		30.5
Green Ext Time (p_c), s	0.0	4.6		2.7		9.8

Intersection Summary	
HCM 7th Control Delay, s/veh	30.7
HCM 7th LOS	C

Notes

User approved volume balancing among the lanes for turning movement.

Lane Group	EBL	EBT	EBR	WBL	WBT	WBR	NBL	NBT	NBR	SBL	SBT	SBR
Lane Configurations												
Traffic Volume (vph)	416	386	417	176	213	274	244	917	126	318	1659	420
Future Volume (vph)	416	386	417	176	213	274	244	917	126	318	1659	420
Turn Type	Prot	NA	Perm	Prot	NA	Perm	Prot	NA	Perm	Prot	NA	Perm
Protected Phases	7	4		3	8		5	2		1	6	
Permitted Phases			4			8			2			6
Detector Phase	7	4	4	3	8	8	5	2	2	1	6	6
Switch Phase												
Minimum Initial (s)	5.0	10.0	10.0	5.0	10.0	10.0	5.0	10.0	10.0	5.0	10.0	10.0
Minimum Split (s)	9.6	43.4	43.4	9.6	43.4	43.4	9.6	37.8	37.8	9.6	32.8	32.8
Total Split (s)	19.0	47.0	47.0	15.4	43.4	43.4	13.3	41.2	41.2	16.4	44.3	44.3
Total Split (%)	15.8%	39.2%	39.2%	12.8%	36.2%	36.2%	11.1%	34.3%	34.3%	13.7%	36.9%	36.9%
Yellow Time (s)	3.6	4.4	4.4	3.6	4.4	4.4	3.6	4.8	4.8	3.6	4.8	4.8
All-Red Time (s)	1.0	1.0	1.0	1.0	1.0	1.0	1.0	1.0	1.0	1.0	1.0	1.0
Lost Time Adjust (s)	0.0	0.0	0.0	0.0	0.0	0.0	0.0	0.0	0.0	0.0	0.0	0.0
Total Lost Time (s)	4.6	5.4	5.4	4.6	5.4	5.4	4.6	5.8	5.8	4.6	5.8	5.8
Lead/Lag	Lead	Lag	Lag	Lead	Lag	Lag	Lead	Lag	Lag	Lead	Lag	Lag
Lead-Lag Optimize?	Yes	Yes	Yes	Yes	Yes	Yes	Yes	Yes	Yes	Yes	Yes	Yes
Recall Mode	None	None	None	None	None	None	None	Min	Min	None	Min	Min
Act Effct Green (s)	14.5	27.8	27.8	9.4	22.7	22.7	8.8	35.7	35.7	11.9	38.9	38.9
Actuated g/C Ratio	0.14	0.26	0.26	0.09	0.22	0.22	0.08	0.34	0.34	0.11	0.37	0.37
v/c Ratio	0.96	0.45	0.83	0.62	0.30	0.63	0.93	0.58	0.22	0.89	0.96	0.54
Control Delay (s/veh)	78.9	33.4	34.7	57.3	34.5	19.9	88.0	31.7	6.1	73.6	47.8	5.3
Queue Delay	0.0	0.0	0.0	0.0	0.0	0.0	0.0	0.0	0.0	0.0	0.0	0.0
Total Delay (s/veh)	78.9	33.4	34.7	57.3	34.5	19.9	88.0	31.7	6.1	73.6	47.8	5.3
LOS	E	C	C	E	C	B	F	C	A	E	D	A
Approach Delay (s/veh)		49.4			34.5			39.9			43.8	
Approach LOS		D			C			D			D	

Intersection Summary	
Cycle Length: 120	
Actuated Cycle Length: 105.5	
Natural Cycle: 115	
Control Type: Actuated-Uncoordinated	
Maximum v/c Ratio: 0.96	
Intersection Signal Delay (s/veh): 43.0	Intersection LOS: D
Intersection Capacity Utilization 78.4%	ICU Level of Service D
Analysis Period (min) 15	

Splits and Phases: 3: La Sierra Av. & Indiana Av./S. Indiana Av.

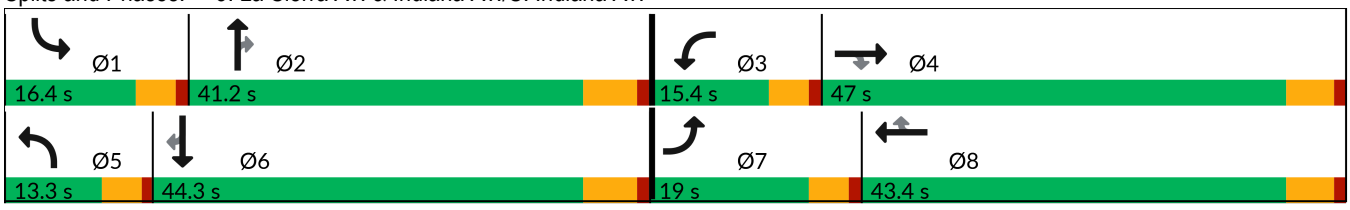

Movement	EBL	EBT	EBR	WBL	WBT	WBR	NBL	NBT	NBR	SBL	SBT	SBR
Lane Configurations												
Traffic Volume (veh/h)	416	386	417	176	213	274	244	917	126	318	1659	420
Future Volume (veh/h)	416	386	417	176	213	274	244	917	126	318	1659	420
Initial Q (Qb), veh	0	0	0	0	0	0	0	0	0	0	0	0
Lane Width Adj.	1.00	1.00	1.00	1.00	1.00	1.00	1.00	1.00	1.00	1.00	1.00	1.00
Ped-Bike Adj(A_pbT)	1.00		0.98	1.00		0.98	1.00		0.99	1.00		0.98
Parking Bus, Adj	1.00	1.00	1.00	1.00	1.00	1.00	1.00	1.00	1.00	1.00	1.00	1.00
Work Zone On Approach		No			No			No			No	
Adj Sat Flow, veh/h/ln	1870	1870	1870	1870	1870	1870	1870	1870	1870	1870	1870	1870
Adj Flow Rate, veh/h	452	420	312	191	232	239	265	997	83	346	1803	359
Peak Hour Factor	0.92	0.92	0.92	0.92	0.92	0.92	0.92	0.92	0.92	0.92	0.92	0.92
Percent Heavy Veh, %	2	2	2	2	2	2	2	2	2	2	2	2
Cap, veh/h	478	982	428	256	754	330	289	1736	536	392	1888	572
Arrive On Green	0.14	0.28	0.28	0.07	0.21	0.21	0.08	0.34	0.34	0.11	0.37	0.37
Sat Flow, veh/h	3456	3554	1550	3456	3554	1558	3456	5106	1577	3456	5106	1548
Grp Volume(v), veh/h	452	420	312	191	232	239	265	997	83	346	1803	359
Grp Sat Flow(s),veh/h/ln	1728	1777	1550	1728	1777	1558	1728	1702	1577	1728	1702	1548
Q Serve(g_s), s	13.5	10.1	19.0	5.6	5.7	14.9	7.9	16.7	3.8	10.3	35.8	19.8
Cycle Q Clear(g_c), s	13.5	10.1	19.0	5.6	5.7	14.9	7.9	16.7	3.8	10.3	35.8	19.8
Prop In Lane	1.00		1.00	1.00		1.00	1.00		1.00	1.00		1.00
Lane Grp Cap(c), veh/h	478	982	428	256	754	330	289	1736	536	392	1888	572
V/C Ratio(X)	0.94	0.43	0.73	0.75	0.31	0.72	0.92	0.57	0.15	0.88	0.95	0.63
Avail Cap(c_a), veh/h	478	1421	620	359	1298	569	289	1738	537	392	1890	573
HCM Platoon Ratio	1.00	1.00	1.00	1.00	1.00	1.00	1.00	1.00	1.00	1.00	1.00	1.00
Upstream Filter(I)	1.00	1.00	1.00	1.00	1.00	1.00	1.00	1.00	1.00	1.00	1.00	1.00
Uniform Delay (d), s/veh	44.4	30.9	34.1	47.2	34.5	38.1	47.3	28.2	23.9	45.4	31.9	26.9
Incr Delay (d2), s/veh	27.5	0.3	2.4	2.8	0.2	3.0	31.6	0.6	0.2	19.7	11.9	2.5
Initial Q Delay(d3), s/veh	0.0	0.0	0.0	0.0	0.0	0.0	0.0	0.0	0.0	0.0	0.0	0.0
%ile BackOfQ(50%),veh/ln	7.4	4.2	7.2	2.5	2.4	5.8	4.6	6.5	1.4	5.3	15.7	7.3
Unsig. Movement Delay, s/veh												
LnGrp Delay(d), s/veh	71.9	31.2	36.5	50.0	34.8	41.2	78.9	28.7	24.1	65.2	43.8	29.4
LnGrp LOS	E	C	D	D	C	D	E	C	C	E	D	C
Approach Vol, veh/h		1184			662			1345			2508	
Approach Delay, s/veh		48.1			41.5			38.3			44.7	
Approach LOS		D			D			D			D	

Timer - Assigned Phs	1	2	3	4	5	6	7	8
Phs Duration (G+Y+Rc), s	16.4	41.2	12.3	34.2	13.3	44.3	19.0	27.5
Change Period (Y+Rc), s	4.6	5.8	4.6	5.4	4.6	5.8	4.6	5.4
Max Green Setting (Gmax), s	11.8	35.4	10.8	41.6	8.7	38.5	14.4	38.0
Max Q Clear Time (g_c+I1), s	12.3	18.7	7.6	21.0	9.9	37.8	15.5	16.9
Green Ext Time (p_c), s	0.0	8.2	0.1	3.6	0.0	0.7	0.0	2.1

Intersection Summary	
HCM 7th Control Delay, s/veh	43.5
HCM 7th LOS	D

Lane Group	EBL	EBT	EBR	WBL	WBT	WBR	NBL	NBT	SBL	SBT
Lane Configurations										
Traffic Volume (vph)	65	117	166	298	84	194	30	817	213	1597
Future Volume (vph)	65	117	166	298	84	194	30	817	213	1597
Turn Type	Prot	NA	Perm	Prot	NA	Perm	Prot	NA	Prot	NA
Protected Phases	7	4		3	8		5	2	1	6
Permitted Phases			4			8				
Detector Phase	7	4	4	3	8	8	5	2	1	6
Switch Phase										
Minimum Initial (s)	5.0	10.0	10.0	5.0	10.0	10.0	5.0	10.0	5.0	10.0
Minimum Split (s)	9.6	34.1	34.1	9.6	33.8	33.8	9.6	35.8	9.6	33.8
Total Split (s)	10.4	34.1	34.1	21.0	44.7	44.7	9.6	44.5	20.4	55.3
Total Split (%)	8.7%	28.4%	28.4%	17.5%	37.3%	37.3%	8.0%	37.1%	17.0%	46.1%
Yellow Time (s)	3.6	4.1	4.1	3.6	4.8	4.8	3.6	4.8	3.6	4.8
All-Red Time (s)	1.0	1.0	1.0	1.0	1.0	1.0	1.0	1.0	1.0	1.0
Lost Time Adjust (s)	0.0	0.0	0.0	0.0	0.0	0.0	0.0	0.0	0.0	0.0
Total Lost Time (s)	4.6	5.1	5.1	4.6	5.8	5.8	4.6	5.8	4.6	5.8
Lead/Lag	Lead	Lag	Lag	Lead	Lag	Lag	Lead	Lag	Lead	Lag
Lead-Lag Optimize?	Yes	Yes	Yes	Yes	Yes	Yes	Yes	Yes	Yes	Yes
Recall Mode	None	None	None	None	None	None	None	Min	None	Min
Act Effct Green (s)	5.7	14.6	14.6	16.5	26.9	26.9	5.0	36.4	15.9	51.4
Actuated g/C Ratio	0.05	0.14	0.14	0.16	0.26	0.26	0.05	0.35	0.15	0.50
v/c Ratio	0.37	0.47	0.46	1.13	0.18	0.37	0.38	0.83	0.84	1.02
Control Delay (s/veh)	56.0	47.0	8.3	133.7	32.4	6.2	64.1	38.1	70.5	53.4
Queue Delay	0.0	0.0	0.0	0.0	0.0	0.0	0.0	0.0	0.0	0.0
Total Delay (s/veh)	56.0	47.0	8.3	133.7	32.4	6.2	64.1	38.1	70.5	53.4
LOS	E	D	A	F	C	A	E	D	E	D
Approach Delay (s/veh)		30.2			76.0			38.9		55.3
Approach LOS		C			E			D		E

Intersection Summary	
Cycle Length: 120	
Actuated Cycle Length: 103.7	
Natural Cycle: 120	
Control Type: Actuated-Uncoordinated	
Maximum v/c Ratio: 1.13	
Intersection Signal Delay (s/veh): 51.9	Intersection LOS: D
Intersection Capacity Utilization 87.2%	ICU Level of Service E
Analysis Period (min) 15	

Splits and Phases: 4: La Sierra Av. & Victoria Av.

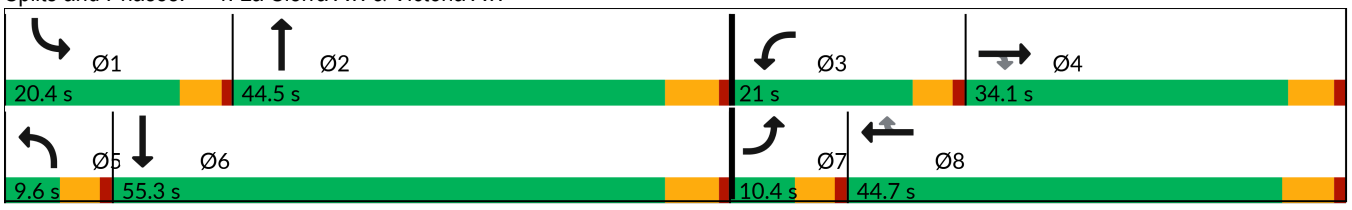

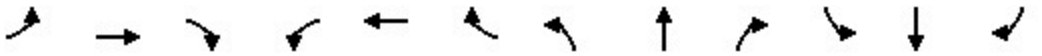

Movement	EBL	EBT	EBR	WBL	WBT	WBR	NBL	NBT	NBR	SBL	SBT	SBR
Lane Configurations												
Traffic Volume (veh/h)	65	117	166	298	84	194	30	817	144	213	1597	71
Future Volume (veh/h)	65	117	166	298	84	194	30	817	144	213	1597	71
Initial Q (Qb), veh	0	0	0	0	0	0	0	0	0	0	0	0
Lane Width Adj.	1.00	1.00	1.00	1.00	1.00	1.00	1.00	1.00	1.00	1.00	1.00	1.00
Ped-Bike Adj(A_pbT)	1.00		0.98	1.00		0.99	1.00		1.00	1.00		1.00
Parking Bus, Adj	1.00	1.00	1.00	1.00	1.00	1.00	1.00	1.00	1.00	1.00	1.00	1.00
Work Zone On Approach		No			No			No			No	
Adj Sat Flow, veh/h/ln	1870	1870	1870	1870	1870	1870	1870	1870	1870	1870	1870	1870
Adj Flow Rate, veh/h	69	124	87	317	89	126	32	869	100	227	1699	39
Peak Hour Factor	0.94	0.94	0.94	0.94	0.94	0.94	0.94	0.94	0.94	0.94	0.94	0.94
Percent Heavy Veh, %	2	2	2	2	2	2	2	2	2	2	2	2
Cap, veh/h	148	188	157	294	417	349	53	1218	140	259	1758	40
Arrive On Green	0.04	0.10	0.10	0.17	0.22	0.22	0.03	0.57	0.38	0.15	0.74	0.49
Sat Flow, veh/h	3456	1870	1559	1781	1870	1563	1781	3211	370	1781	3551	81
Grp Volume(v), veh/h	69	124	87	317	89	126	32	481	488	227	848	890
Grp Sat Flow(s),veh/h/ln	1728	1870	1559	1781	1870	1563	1781	1777	1804	1781	1777	1856
Q Serve(g_s), s	1.9	6.3	5.3	16.4	3.9	6.8	1.8	19.5	20.3	12.4	42.9	43.9
Cycle Q Clear(g_c), s	1.9	6.3	5.3	16.4	3.9	6.8	1.8	19.5	20.3	12.4	42.9	43.9
Prop In Lane	1.00		1.00	1.00		1.00	1.00		0.20	1.00		0.04
Lane Grp Cap(c), veh/h	148	188	157	294	417	349	53	674	684	259	879	919
V/C Ratio(X)	0.47	0.66	0.55	1.08	0.21	0.36	0.61	0.71	0.71	0.88	0.96	0.97
Avail Cap(c_a), veh/h	202	546	455	294	733	612	90	693	703	284	886	925
HCM Platoon Ratio	1.00	1.00	1.00	1.00	1.00	1.00	1.00	1.50	1.00	1.00	1.50	1.00
Upstream Filter(I)	1.00	1.00	1.00	1.00	1.00	1.00	1.00	1.00	1.00	1.00	1.00	1.00
Uniform Delay (d), s/veh	46.4	43.0	42.5	41.4	31.5	32.6	47.6	17.5	19.2	41.6	12.0	12.6
Incr Delay (d2), s/veh	0.8	3.9	3.0	74.5	0.3	0.6	4.2	3.7	3.7	22.5	22.0	22.3
Initial Q Delay(d3), s/veh	0.0	0.0	0.0	0.0	0.0	0.0	0.0	0.0	0.0	0.0	0.0	0.0
%ile BackOfQ(50%),veh/ln	0.8	3.1	2.1	12.9	1.7	2.5	0.8	6.3	7.0	6.8	11.3	12.3
Unsig. Movement Delay, s/veh												
LnGrp Delay(d), s/veh	47.2	46.9	45.5	115.9	31.7	33.2	51.8	21.2	22.9	64.0	33.9	34.9
LnGrp LOS	D	D	D	F	C	C	D	C	C	E	C	C
Approach Vol, veh/h		280			532			1001			1965	
Approach Delay, s/veh		46.5			82.3			23.0			37.9	
Approach LOS		D			F			C			D	

Timer - Assigned Phs	1	2	3	4	5	6	7	8
Phs Duration (G+Y+Rc), s	19.0	43.5	21.0	15.8	7.5	54.9	8.9	27.9
Change Period (Y+Rc), s	4.6	5.8	4.6	* 5.8	4.6	5.8	4.6	5.8
Max Green Setting (Gmax), s	15.8	38.7	16.4	* 29	5.0	49.5	5.8	38.9
Max Q Clear Time (g_c+I1), s	14.4	22.3	18.4	8.3	3.8	45.9	3.9	8.8
Green Ext Time (p_c), s	0.0	7.2	0.0	0.9	0.0	3.2	0.0	0.8

Intersection Summary	
HCM 7th Control Delay, s/veh	40.8
HCM 7th LOS	D

Notes

* HCM 7th computational engine requires equal clearance times for the phases crossing the barrier.

Lane Group	WBL	WBR	NBT	NBR	SBL	SBT
Lane Configurations						
Traffic Volume (vph)	9	169	822	14	305	1721
Future Volume (vph)	9	169	822	14	305	1721
Turn Type	Prot	Perm	NA	Perm	Prot	NA
Protected Phases	8		2		1	6
Permitted Phases		8		2		
Detector Phase	8	8	2	2	1	6
Switch Phase						
Minimum Initial (s)	10.0	10.0	10.0	10.0	5.0	10.0
Minimum Split (s)	33.4	33.4	27.5	27.5	9.6	16.5
Total Split (s)	35.0	35.0	47.0	47.0	38.0	85.0
Total Split (%)	29.2%	29.2%	39.2%	39.2%	31.7%	70.8%
Yellow Time (s)	4.4	4.4	5.5	5.5	3.6	5.5
All-Red Time (s)	1.0	1.0	1.0	1.0	1.0	1.0
Lost Time Adjust (s)	0.0	0.0	0.0	0.0	0.0	0.0
Total Lost Time (s)	5.4	5.4	6.5	6.5	4.6	6.5
Lead/Lag			Lag	Lag	Lead	
Lead-Lag Optimize?			Yes	Yes	Yes	
Recall Mode	None	None	Min	Min	None	Min
Act Effct Green (s)	13.0	13.0	28.8	28.8	21.1	54.8
Actuated g/C Ratio	0.16	0.16	0.36	0.36	0.26	0.68
v/c Ratio	0.03	0.44	0.69	0.03	0.70	0.76
Control Delay (s/veh)	33.3	9.4	26.7	12.1	37.1	11.4
Queue Delay	0.0	0.0	0.0	0.0	0.0	0.0
Total Delay (s/veh)	33.3	9.4	26.7	12.1	37.1	11.4
LOS	C	A	C	B	D	B
Approach Delay (s/veh)	10.6		26.4			15.3
Approach LOS	B		C			B

Intersection Summary	
Cycle Length: 120	
Actuated Cycle Length: 80.4	
Natural Cycle: 90	
Control Type: Actuated-Uncoordinated	
Maximum v/c Ratio: 0.76	
Intersection Signal Delay (s/veh): 18.1	Intersection LOS: B
Intersection Capacity Utilization 65.8%	ICU Level of Service C
Analysis Period (min) 15	

Splits and Phases: 5: La Sierra Av. & McAllister Pkwy.

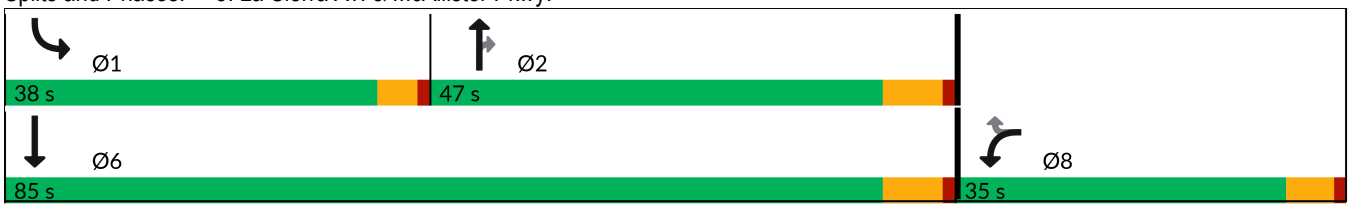



Movement	WBL	WBR	NBT	NBR	SBL	SBT
Lane Configurations						
Traffic Volume (veh/h)	9	169	822	14	305	1721
Future Volume (veh/h)	9	169	822	14	305	1721
Initial Q (Qb), veh	0	0	0	0	0	0
Lane Width Adj.	1.00	1.00	1.00	1.00	1.00	1.00
Ped-Bike Adj(A_pbT)	1.00	1.00		0.98	1.00	
Parking Bus, Adj	1.00	1.00	1.00	1.00	1.00	1.00
Work Zone On Approach	No		No			No
Adj Sat Flow, veh/h/ln	1870	1870	1870	1870	1870	1870
Adj Flow Rate, veh/h	10	74	874	15	324	1831
Peak Hour Factor	0.94	0.94	0.94	0.94	0.94	0.94
Percent Heavy Veh, %	2	2	2	2	2	2
Cap, veh/h	196	174	1646	719	370	2601
Arrive On Green	0.11	0.11	0.46	0.46	0.21	0.73
Sat Flow, veh/h	1781	1585	3647	1552	1781	3647
Grp Volume(v), veh/h	10	74	874	15	324	1831
Grp Sat Flow(s),veh/h/ln	1781	1585	1777	1552	1781	1777
Q Serve(g_s), s	0.4	3.3	13.2	0.4	13.3	21.4
Cycle Q Clear(g_c), s	0.4	3.3	13.2	0.4	13.3	21.4
Prop In Lane	1.00	1.00		1.00	1.00	
Lane Grp Cap(c), veh/h	196	174	1646	719	370	2601
V/C Ratio(X)	0.05	0.42	0.53	0.02	0.88	0.70
Avail Cap(c_a), veh/h	700	623	1912	835	790	3706
HCM Platoon Ratio	1.00	1.00	1.00	1.00	1.00	1.00
Upstream Filter(I)	1.00	1.00	1.00	1.00	1.00	1.00
Uniform Delay (d), s/veh	30.0	31.3	14.4	10.9	28.9	5.6
Incr Delay (d2), s/veh	0.1	1.6	0.4	0.0	2.6	0.5
Initial Q Delay(d3), s/veh	0.0	0.0	0.0	0.0	0.0	0.0
%ile BackOfQ(50%),veh/ln	0.2	1.3	4.3	0.1	5.2	3.2
Unsig. Movement Delay, s/veh						
LnGrp Delay(d), s/veh	30.1	32.9	14.8	11.0	31.5	6.1
LnGrp LOS	C	C	B	B	C	A
Approach Vol, veh/h	84		889			2155
Approach Delay, s/veh	32.6		14.7			9.9
Approach LOS	C		B			A

Timer - Assigned Phs	1	2			6	8
Phs Duration (G+Y+Rc), s	20.2	41.4			61.6	13.7
Change Period (Y+Rc), s	4.6	6.5			6.5	5.4
Max Green Setting (Gmax), s	33.4	40.5			78.5	29.6
Max Q Clear Time (g_c+I1), s	15.3	15.2			23.4	5.3
Green Ext Time (p_c), s	0.4	8.1			31.7	0.2

Intersection Summary	
HCM 7th Control Delay, s/veh	11.9
HCM 7th LOS	B

Intersection	
Intersection Delay, s/veh	147
Intersection LOS	F

Movement	WBL	WBR	NBT	NBR	SBL	SBT
Lane Configurations						
Traffic Vol, veh/h	85	368	249	100	740	534
Future Vol, veh/h	85	368	249	100	740	534
Peak Hour Factor	0.93	0.93	0.93	0.93	0.93	0.93
Heavy Vehicles, %	2	2	2	2	2	2
Mvmt Flow	91	396	268	108	796	574
Number of Lanes	1	0	2	0	1	1

Approach	WB	NB	SB
Opposing Approach		SB	NB
Opposing Lanes	0	2	2
Conflicting Approach Left	NB		WB
Conflicting Lanes Left	2	0	1
Conflicting Approach Right	SB	WB	
Conflicting Lanes Right	2	1	0
HCM Control Delay, s/veh	31.8	15.1	224.1
HCM LOS	D	C	F

Lane	NBLn1	NBLn2	WBLn1	SBLn1	SBLn2
Vol Left, %	0%	0%	19%	100%	0%
Vol Thru, %	100%	45%	0%	0%	100%
Vol Right, %	0%	55%	81%	0%	0%
Sign Control	Stop	Stop	Stop	Stop	Stop
Traffic Vol by Lane	166	183	453	740	534
LT Vol	0	0	85	740	0
Through Vol	166	83	0	0	534
RT Vol	0	100	368	0	0
Lane Flow Rate	178	197	487	796	574
Geometry Grp	5	5	2	5	5
Degree of Util (X)	0.374	0.392	0.828	1.641	1.103
Departure Headway (Hd)	7.935	7.541	6.12	7.426	6.913
Convergence, Y/N	Yes	Yes	Yes	Yes	Yes
Cap	457	480	599	493	528
Service Time	5.635	5.241	4.091	5.169	4.656
HCM Lane V/C Ratio	0.389	0.41	0.813	1.615	1.087
HCM Control Delay, s/veh	15.3	15	31.8	316.6	96
HCM Lane LOS	C	B	D	F	F
HCM 95th-tile Q	1.7	1.8	8.6	45.2	18.3

Intersection	
Intersection Delay, s/veh	94.7
Intersection LOS	F

Movement	EBL	EBT	WBT	WBR	SBL	SBR
Lane Configurations						
Traffic Vol, veh/h	68	774	350	40	50	118
Future Vol, veh/h	68	774	350	40	50	118
Peak Hour Factor	0.94	0.94	0.94	0.94	0.94	0.94
Heavy Vehicles, %	2	2	2	2	2	2
Mvmt Flow	72	823	372	43	53	126
Number of Lanes	1	1	2	0	1	0

Approach	EB	WB	SB
Opposing Approach	WB	EB	
Opposing Lanes	2	2	0
Conflicting Approach Left	SB		WB
Conflicting Lanes Left	1	0	2
Conflicting Approach Right		SB	EB
Conflicting Lanes Right	0	1	2
HCM Control Delay, s/veh	49.4	12.2	12.4
HCM LOS	F	B	B

Lane	EBLn1	EBLn2	WBLn1	WBLn2	SBLn1
Vol Left, %	100%	0%	0%	0%	30%
Vol Thru, %	0%	100%	100%	74%	0%
Vol Right, %	0%	0%	0%	26%	70%
Sign Control	Stop	Stop	Stop	Stop	Stop
Traffic Vol by Lane	68	774	233	157	168
LT Vol	68	0	0	0	50
Through Vol	0	774	233	117	0
RT Vol	0	0	0	40	118
Lane Flow Rate	72	823	248	167	179
Geometry Grp	5	5	5	5	2
Degree of Util (X)	0.124	1.293	0.403	0.262	0.302
Departure Headway (Hd)	6.158	5.653	6.225	6.043	6.606
Convergence, Y/N	Yes	Yes	Yes	Yes	Yes
Cap	586	650	581	598	547
Service Time	3.858	3.353	3.925	3.743	4.606
HCM Lane V/C Ratio	0.123	1.266	0.427	0.279	0.327
HCM Control Delay, s/veh	9.7	161.7	13.1	10.9	12.4
HCM Lane LOS	A	F	B	B	B
HCM 95th-tile Q	0.4	32.8	1.9	1	1.3

Intersection	
Int Delay, s/veh	0.9

Movement	EBL	EBT	WBT	WBR	SBL	SBR
Lane Configurations						
Traffic Vol, veh/h	67	757	350	9	5	40
Future Vol, veh/h	67	757	350	9	5	40
Conflicting Peds, #/hr	0	0	0	0	0	0
Sign Control	Free	Free	Free	Free	Stop	Stop
RT Channelized	-	None	-	None	-	None
Storage Length	100	-	-	-	0	-
Veh in Median Storage, #	-	0	0	-	1	-
Grade, %	-	0	0	-	0	-
Peak Hour Factor	92	92	92	92	92	92
Heavy Vehicles, %	2	2	2	2	2	2
Mvmt Flow	73	823	380	10	5	43

Major/Minor	Major1		Major2		Minor2	
Conflicting Flow All	390	0	-	0	1354	385
Stage 1	-	-	-	-	385	-
Stage 2	-	-	-	-	968	-
Critical Hdwy	4.12	-	-	-	6.42	6.22
Critical Hdwy Stg 1	-	-	-	-	5.42	-
Critical Hdwy Stg 2	-	-	-	-	5.42	-
Follow-up Hdwy	2.218	-	-	-	3.518	3.318
Pot Cap-1 Maneuver	1168	-	-	-	165	662
Stage 1	-	-	-	-	687	-
Stage 2	-	-	-	-	368	-
Platoon blocked, %			-	-	-	
Mov Cap-1 Maneuver	1168	-	-	-	155	662
Mov Cap-2 Maneuver	-	-	-	-	277	-
Stage 1	-	-	-	-	645	-
Stage 2	-	-	-	-	368	-

Approach	EB	WB	SB
HCM Control Delay, s/v	0.67	0	11.86
HCM LOS			B

Minor Lane/Major Mvmt	EBL	EBT	WBT	WBR	SBLn1
Capacity (veh/h)	1168	-	-	-	574
HCM Lane V/C Ratio	0.062	-	-	-	0.085
HCM Control Delay (s/veh)	8.3	-	-	-	11.9
HCM Lane LOS	A	-	-	-	B
HCM 95th %tile Q(veh)	0.2	-	-	-	0.3

APPENDIX 5.2: EAP (2030) (PROJECT PLUS HIGHLAND GROVE IV PLUS GREENTREE) CONDITIONS INTERSECTION OPERATIONS ANALYSIS WORKSHEETS

This Page Intentionally Left Blank

Lane Group	WBL	WBT	WBR	NBL	NBT	SBT	SBR
Lane Configurations							
Traffic Volume (vph)	324	0	519	727	1498	1052	150
Future Volume (vph)	324	0	519	727	1498	1052	150
Turn Type	Split	NA	Perm	Prot	NA	NA	Perm
Protected Phases	8	8		5	2	6	
Permitted Phases			8				6
Detector Phase	8	8	8	5	2	6	6
Switch Phase							
Minimum Initial (s)	5.0	5.0	5.0	5.0	5.0	5.0	5.0
Minimum Split (s)	10.0	10.0	10.0	9.0	26.5	29.5	29.5
Total Split (s)	37.0	37.0	37.0	30.0	63.0	33.0	33.0
Total Split (%)	37.0%	37.0%	37.0%	30.0%	63.0%	33.0%	33.0%
Yellow Time (s)	4.0	4.0	4.0	3.0	4.5	4.5	4.5
All-Red Time (s)	1.0	1.0	1.0	1.0	1.0	1.0	1.0
Lost Time Adjust (s)	0.0	0.0	0.0	0.0	0.0	0.0	0.0
Total Lost Time (s)	5.0	5.0	5.0	4.0	5.5	5.5	5.5
Lead/Lag				Lead		Lag	Lag
Lead-Lag Optimize?				Yes		Yes	Yes
Recall Mode	None	None	None	None	C-Min	C-Min	C-Min
Act Effct Green (s)	24.0	24.0	24.0	25.1	65.5	36.5	36.5
Actuated g/C Ratio	0.24	0.24	0.24	0.25	0.66	0.37	0.37
v/c Ratio	0.75	0.70	0.68	0.87	0.46	0.59	0.25
Control Delay (s/veh)	46.8	34.3	33.1	42.0	18.6	29.1	8.5
Queue Delay	0.0	0.0	0.0	0.0	0.6	0.0	0.0
Total Delay (s/veh)	46.8	34.3	33.1	42.0	19.2	29.1	8.5
LOS	D	C	C	D	B	C	A
Approach Delay (s/veh)		38.3			26.7	26.5	
Approach LOS		D			C	C	

Intersection Summary	
Cycle Length: 100	
Actuated Cycle Length: 100	
Offset: 0 (0%), Referenced to phase 2:NBT and 6:SBT, Start of Yellow, Master Intersection	
Natural Cycle: 70	
Control Type: Actuated-Coordinated	
Maximum v/c Ratio: 0.87	
Intersection Signal Delay (s/veh): 28.9	Intersection LOS: C
Intersection Capacity Utilization 73.8%	ICU Level of Service D
Analysis Period (min) 15	

Splits and Phases: 1: La Sierra Av. & SR-91 WB Ramps



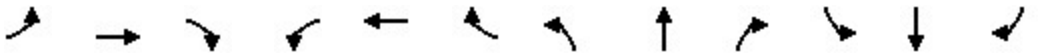

Movement	EBL	EBT	EBR	WBL	WBT	WBR	NBL	NBT	NBR	SBL	SBT	SBR
Lane Configurations												
Traffic Volume (veh/h)	0	0	0	324	0	519	727	1498	0	0	1052	150
Future Volume (veh/h)	0	0	0	324	0	519	727	1498	0	0	1052	150
Initial Q (Qb), veh				0	0	0	0	0	0	0	0	0
Lane Width Adj.				1.00	1.00	1.00	1.00	1.00	1.00	1.00	1.00	1.00
Ped-Bike Adj(A_pbT)				1.00		1.00	1.00		1.00	1.00		0.98
Parking Bus, Adj				1.00	1.00	1.00	1.00	1.00	1.00	1.00	1.00	1.00
Work Zone On Approach					No			No			No	
Adj Sat Flow, veh/h/ln				1856	1900	1885	1870	1870	0	0	1856	1826
Adj Flow Rate, veh/h				450	0	236	749	1544	0	0	1085	112
Peak Hour Factor				0.97	0.97	0.97	0.97	0.97	0.97	0.97	0.97	0.97
Percent Heavy Veh, %				3	0	1	2	2	0	0	3	5
Cap, veh/h				631	0	285	801	3658	0	0	2252	676
Arrive On Green				0.18	0.00	0.18	0.46	1.00	0.00	0.00	0.44	0.44
Sat Flow, veh/h				3534	0	1598	3456	5274	0	0	5233	1522
Grp Volume(v), veh/h				450	0	236	749	1544	0	0	1085	112
Grp Sat Flow(s),veh/h/ln				1767	0	1598	1728	1702	0	0	1689	1522
Q Serve(g_s), s				12.0	0.0	14.2	20.5	0.0	0.0	0.0	15.1	4.4
Cycle Q Clear(g_c), s				12.0	0.0	14.2	20.5	0.0	0.0	0.0	15.1	4.4
Prop In Lane				1.00		1.00	1.00		0.00	0.00		1.00
Lane Grp Cap(c), veh/h				631	0	285	801	3658	0	0	2252	676
V/C Ratio(X)				0.71	0.00	0.83	0.93	0.42	0.00	0.00	0.48	0.17
Avail Cap(c_a), veh/h				1131	0	511	898	3658	0	0	2252	676
HCM Platoon Ratio				1.00	1.00	1.00	2.00	2.00	1.00	1.00	1.00	1.00
Upstream Filter(I)				1.00	0.00	1.00	0.53	0.53	0.00	0.00	1.00	1.00
Uniform Delay (d), s/veh				38.7	0.0	39.6	26.1	0.0	0.0	0.0	19.6	16.7
Incr Delay (d2), s/veh				1.1	0.0	4.6	9.1	0.2	0.0	0.0	0.7	0.5
Initial Q Delay(d3), s/veh				0.0	0.0	0.0	0.0	0.0	0.0	0.0	0.0	0.0
%ile BackOfQ(50%),veh/ln				5.1	0.0	5.7	6.5	0.1	0.0	0.0	5.6	1.5
Unsig. Movement Delay, s/veh												
LnGrp Delay(d), s/veh				39.8	0.0	44.2	35.2	0.2	0.0	0.0	20.4	17.2
LnGrp LOS				D		D	D	A			C	B
Approach Vol, veh/h					686			2293			1197	
Approach Delay, s/veh					41.3			11.6			20.1	
Approach LOS					D			B			C	

Timer - Assigned Phs	2		5	6		8						
Phs Duration (G+Y+Rc), s	77.1		27.2	50.0		22.9						
Change Period (Y+Rc), s	5.5		4.0	5.5		5.0						
Max Green Setting (Gmax), s	57.5		26.0	27.5		32.0						
Max Q Clear Time (g_c+I1), s	2.0		22.5	17.1		16.2						
Green Ext Time (p_c), s	15.6		0.7	5.2		1.6						

Intersection Summary		
HCM 7th Control Delay, s/veh	18.9	
HCM 7th LOS	B	

Notes

User approved volume balancing among the lanes for turning movement.

Lane Group	EBL	EBT	EBR	NBT	NBR	SBL	SBT
Lane Configurations							
Traffic Volume (vph)	462	1	463	1710	551	340	1032
Future Volume (vph)	462	1	463	1710	551	340	1032
Turn Type	Split	NA	Perm	NA	Perm	Prot	NA
Protected Phases	4	4		2		1	6
Permitted Phases			4		2		
Detector Phase	4	4	4	2	2	1	6
Switch Phase							
Minimum Initial (s)	5.0	5.0	5.0	5.0	5.0	5.0	5.0
Minimum Split (s)	10.0	10.0	10.0	29.5	29.5	9.0	26.5
Total Split (s)	40.0	40.0	40.0	43.0	43.0	17.0	60.0
Total Split (%)	40.0%	40.0%	40.0%	43.0%	43.0%	17.0%	60.0%
Yellow Time (s)	4.0	4.0	4.0	4.5	4.5	3.0	4.5
All-Red Time (s)	1.0	1.0	1.0	1.0	1.0	1.0	1.0
Lost Time Adjust (s)	0.0	0.0	0.0	0.0	0.0	0.0	0.0
Total Lost Time (s)	5.0	5.0	5.0	5.5	5.5	4.0	5.5
Lead/Lag				Lag	Lag	Lead	
Lead-Lag Optimize?				Yes	Yes	Yes	
Recall Mode	None	None	None	C-Min	C-Min	None	C-Min
Act Effct Green (s)	26.1	26.1	26.1	45.1	45.1	14.3	63.4
Actuated g/C Ratio	0.26	0.26	0.26	0.45	0.45	0.14	0.63
v/c Ratio	0.76	0.73	0.70	0.78	0.57	0.74	0.34
Control Delay (s/veh)	44.6	35.6	32.7	28.2	4.4	55.8	3.2
Queue Delay	0.1	0.1	0.0	0.0	0.0	0.0	0.0
Total Delay (s/veh)	44.7	35.7	32.7	28.2	4.4	55.8	3.2
LOS	D	D	C	C	A	E	A
Approach Delay (s/veh)		37.9		22.4			16.2
Approach LOS		D		C			B

Intersection Summary	
Cycle Length: 100	
Actuated Cycle Length: 100	
Offset: 28 (28%), Referenced to phase 2:NBT and 6:SBT, Start of Yellow	
Natural Cycle: 60	
Control Type: Actuated-Coordinated	
Maximum v/c Ratio: 0.78	
Intersection Signal Delay (s/veh): 23.7	Intersection LOS: C
Intersection Capacity Utilization 73.8%	ICU Level of Service D
Analysis Period (min) 15	

Splits and Phases: 2: La Sierra Av. & SR-91 EB Ramps

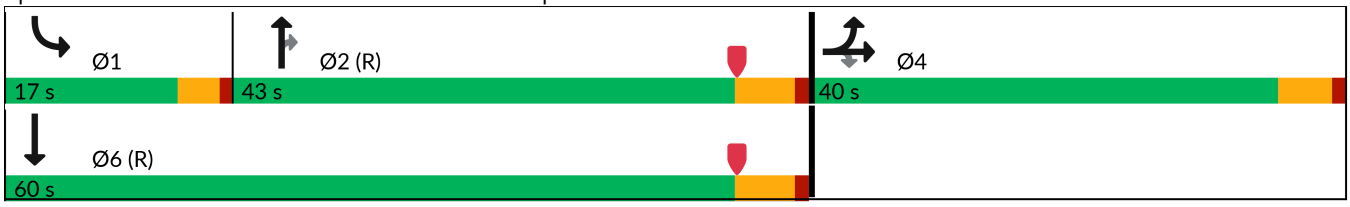

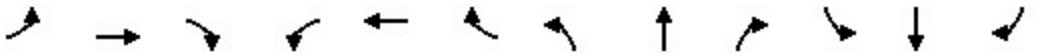

Movement	EBL	EBT	EBR	WBL	WBT	WBR	NBL	NBT	NBR	SBL	SBT	SBR
Lane Configurations												
Traffic Volume (veh/h)	462	1	463	0	0	0	0	1710	551	340	1032	0
Future Volume (veh/h)	462	1	463	0	0	0	0	1710	551	340	1032	0
Initial Q (Qb), veh	0	0	0				0	0	0	0	0	0
Lane Width Adj.	1.00	1.00	1.00				1.00	1.00	1.00	1.00	1.00	1.00
Ped-Bike Adj(A_pbT)	1.00		1.00				1.00		1.00	1.00		1.00
Parking Bus, Adj	1.00	1.00	1.00				1.00	1.00	1.00	1.00	1.00	1.00
Work Zone On Approach		No						No			No	
Adj Sat Flow, veh/h/ln	1885	1900	1811				0	1856	1856	1841	1856	0
Adj Flow Rate, veh/h	561	0	170				0	1781	422	354	1075	0
Peak Hour Factor	0.96	0.96	0.96				0.96	0.96	0.96	0.96	0.96	0.96
Percent Heavy Veh, %	1	0	6				0	3	3	4	3	0
Cap, veh/h	676	0	289				0	2748	852	422	3579	0
Arrive On Green	0.19	0.00	0.19				0.00	0.54	0.54	0.04	0.23	0.00
Sat Flow, veh/h	3591	0	1535				0	5233	1570	3401	5233	0
Grp Volume(v), veh/h	561	0	170				0	1781	422	354	1075	0
Grp Sat Flow(s),veh/h/ln	1795	0	1535				0	1689	1570	1700	1689	0
Q Serve(g_s), s	15.0	0.0	10.1				0.0	24.8	16.8	10.3	17.5	0.0
Cycle Q Clear(g_c), s	15.0	0.0	10.1				0.0	24.8	16.8	10.3	17.5	0.0
Prop In Lane	1.00		1.00				0.00		1.00	1.00		0.00
Lane Grp Cap(c), veh/h	676	0	289				0	2748	852	422	3579	0
V/C Ratio(X)	0.83	0.00	0.59				0.00	0.65	0.50	0.84	0.30	0.00
Avail Cap(c_a), veh/h	1257	0	537				0	2748	852	442	3579	0
HCM Platoon Ratio	1.00	1.00	1.00				1.00	1.00	1.00	0.33	0.33	1.00
Upstream Filter(I)	1.00	0.00	1.00				0.00	0.32	0.32	0.74	0.74	0.00
Uniform Delay (d), s/veh	39.0	0.0	37.0				0.0	16.1	14.3	47.0	18.0	0.0
Incr Delay (d2), s/veh	2.0	0.0	1.4				0.0	0.4	0.7	9.6	0.2	0.0
Initial Q Delay(d3), s/veh	0.0	0.0	0.0				0.0	0.0	0.0	0.0	0.0	0.0
%ile BackOfQ(50%),veh/ln	6.5	0.0	3.7				0.0	8.5	5.4	5.1	7.8	0.0
Unsig. Movement Delay, s/veh												
LnGrp Delay(d), s/veh	41.1	0.0	38.5				0.0	16.5	15.0	56.6	18.1	0.0
LnGrp LOS	D		D					B	B	E	B	
Approach Vol, veh/h		731						2203			1429	
Approach Delay, s/veh		40.4						16.2			27.6	
Approach LOS		D						B			C	

Timer - Assigned Phs	1	2		4		6
Phs Duration (G+Y+Rc), s	16.4	59.7		23.8		76.2
Change Period (Y+Rc), s	4.0	5.5		5.0		5.5
Max Green Setting (Gmax), s	13.0	37.5		35.0		54.5
Max Q Clear Time (g_c+I1), s	12.3	26.8		17.0		19.5
Green Ext Time (p_c), s	0.1	8.4		1.8		8.3

Intersection Summary	
HCM 7th Control Delay, s/veh	24.0
HCM 7th LOS	C

Notes
User approved volume balancing among the lanes for turning movement.

Lane Group	EBL	EBT	EBR	WBL	WBT	WBR	NBL	NBT	NBR	SBL	SBT	SBR
Lane Configurations												
Traffic Volume (vph)	490	225	162	110	236	283	386	1652	181	139	1046	492
Future Volume (vph)	490	225	162	110	236	283	386	1652	181	139	1046	492
Turn Type	Prot	NA	Perm	Prot	NA	Perm	Prot	NA	Perm	Prot	NA	Perm
Protected Phases	7	4		3	8		5	2		1	6	
Permitted Phases			4			8			2			6
Detector Phase	7	4	4	3	8	8	5	2	2	1	6	6
Switch Phase												
Minimum Initial (s)	5.0	10.0	10.0	5.0	10.0	10.0	5.0	10.0	10.0	5.0	10.0	10.0
Minimum Split (s)	9.6	43.4	43.4	9.6	43.4	43.4	9.6	37.8	37.8	9.6	32.8	32.8
Total Split (s)	22.3	53.7	53.7	12.0	43.4	43.4	18.2	44.0	44.0	10.3	36.1	36.1
Total Split (%)	18.6%	44.8%	44.8%	10.0%	36.2%	36.2%	15.2%	36.7%	36.7%	8.6%	30.1%	30.1%
Yellow Time (s)	3.6	4.4	4.4	3.6	4.4	4.4	3.6	4.8	4.8	3.6	4.8	4.8
All-Red Time (s)	1.0	1.0	1.0	1.0	1.0	1.0	1.0	1.0	1.0	1.0	1.0	1.0
Lost Time Adjust (s)	0.0	0.0	0.0	0.0	0.0	0.0	0.0	0.0	0.0	0.0	0.0	0.0
Total Lost Time (s)	4.6	5.4	5.4	4.6	5.4	5.4	4.6	5.8	5.8	4.6	5.8	5.8
Lead/Lag	Lead	Lag	Lag	Lead	Lag	Lag	Lead	Lag	Lag	Lead	Lag	Lag
Lead-Lag Optimize?	Yes	Yes	Yes	Yes	Yes	Yes	Yes	Yes	Yes	Yes	Yes	Yes
Recall Mode	None	None	None	None	None	None	None	Min	Min	None	Min	Min
Act Effct Green (s)	17.9	28.5	28.5	6.9	17.6	17.6	13.7	38.5	38.5	5.8	30.6	30.6
Actuated g/C Ratio	0.18	0.28	0.28	0.07	0.18	0.18	0.14	0.38	0.38	0.06	0.31	0.31
v/c Ratio	0.88	0.25	0.31	0.51	0.42	0.72	0.90	0.93	0.28	0.78	0.74	0.68
Control Delay (s/veh)	58.4	27.5	5.2	55.0	37.8	24.0	67.7	40.3	6.8	74.8	36.1	10.4
Queue Delay	0.0	0.0	0.0	0.0	0.0	0.0	0.0	0.0	0.0	0.0	0.0	0.0
Total Delay (s/veh)	58.4	27.5	5.2	55.0	37.8	24.0	67.7	40.3	6.8	74.8	36.1	10.4
LOS	E	C	A	E	D	C	E	D	A	E	D	B
Approach Delay (s/veh)		40.6			34.6			42.3			31.8	
Approach LOS		D			C			D			C	

Intersection Summary	
Cycle Length: 120	
Actuated Cycle Length: 100.3	
Natural Cycle: 115	
Control Type: Actuated-Uncoordinated	
Maximum v/c Ratio: 0.93	
Intersection Signal Delay (s/veh): 37.9	Intersection LOS: D
Intersection Capacity Utilization 78.2%	ICU Level of Service D
Analysis Period (min) 15	

Splits and Phases: 3: La Sierra Av. & Indiana Av./S. Indiana Av.

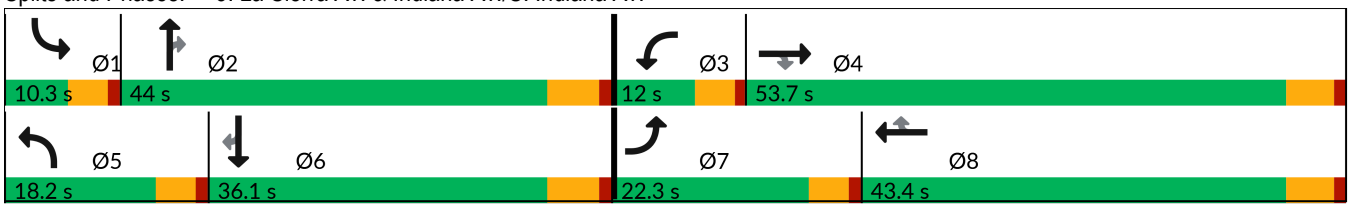

Movement	EBL	EBT	EBR	WBL	WBT	WBR	NBL	NBT	NBR	SBL	SBT	SBR
Lane Configurations												
Traffic Volume (veh/h)	490	225	162	110	236	283	386	1652	181	139	1046	492
Future Volume (veh/h)	490	225	162	110	236	283	386	1652	181	139	1046	492
Initial Q (Qb), veh	0	0	0	0	0	0	0	0	0	0	0	0
Lane Width Adj.	1.00	1.00	1.00	1.00	1.00	1.00	1.00	1.00	1.00	1.00	1.00	1.00
Ped-Bike Adj(A_pbT)	1.00		1.00	1.00		1.00	1.00		1.00	1.00		0.98
Parking Bus, Adj	1.00	1.00	1.00	1.00	1.00	1.00	1.00	1.00	1.00	1.00	1.00	1.00
Work Zone On Approach		No			No			No			No	
Adj Sat Flow, veh/h/ln	1870	1870	1870	1870	1870	1870	1870	1870	1870	1870	1870	1870
Adj Flow Rate, veh/h	538	247	125	121	259	231	424	1815	135	153	1149	316
Peak Hour Factor	0.91	0.91	0.91	0.91	0.91	0.91	0.91	0.91	0.91	0.91	0.91	0.91
Percent Heavy Veh, %	2	2	2	2	2	2	2	2	2	2	2	2
Cap, veh/h	597	1108	494	182	681	303	465	1926	597	195	1526	463
Arrive On Green	0.17	0.31	0.31	0.05	0.19	0.19	0.13	0.38	0.38	0.06	0.30	0.30
Sat Flow, veh/h	3456	3554	1584	3456	3554	1578	3456	5106	1583	3456	5106	1550
Grp Volume(v), veh/h	538	247	125	121	259	231	424	1815	135	153	1149	316
Grp Sat Flow(s),veh/h/ln	1728	1777	1584	1728	1777	1578	1728	1702	1583	1728	1702	1550
Q Serve(g_s), s	15.4	5.2	6.0	3.5	6.4	14.0	12.2	34.7	5.9	4.4	20.6	18.1
Cycle Q Clear(g_c), s	15.4	5.2	6.0	3.5	6.4	14.0	12.2	34.7	5.9	4.4	20.6	18.1
Prop In Lane	1.00		1.00	1.00		1.00	1.00		1.00	1.00		1.00
Lane Grp Cap(c), veh/h	597	1108	494	182	681	303	465	1926	597	195	1526	463
V/C Ratio(X)	0.90	0.22	0.25	0.66	0.38	0.76	0.91	0.94	0.23	0.78	0.75	0.68
Avail Cap(c_a), veh/h	605	1699	757	253	1337	593	465	1931	598	195	1531	465
HCM Platoon Ratio	1.00	1.00	1.00	1.00	1.00	1.00	1.00	1.00	1.00	1.00	1.00	1.00
Upstream Filter(I)	1.00	1.00	1.00	1.00	1.00	1.00	1.00	1.00	1.00	1.00	1.00	1.00
Uniform Delay (d), s/veh	40.9	25.7	26.0	47.0	35.6	38.7	43.1	30.4	21.4	47.1	32.0	31.2
Incr Delay (d2), s/veh	16.0	0.1	0.3	1.6	0.3	4.0	21.6	10.1	0.3	17.3	2.3	4.5
Initial Q Delay(d3), s/veh	0.0	0.0	0.0	0.0	0.0	0.0	0.0	0.0	0.0	0.0	0.0	0.0
%ile BackOfQ(50%),veh/ln	7.7	2.1	2.2	1.5	2.7	5.6	6.4	14.9	2.1	2.3	8.3	7.1
Unsig. Movement Delay, s/veh												
LnGrp Delay(d), s/veh	57.0	25.8	26.2	48.5	35.9	42.7	64.8	40.5	21.7	64.3	34.3	35.7
LnGrp LOS	E	C	C	D	D	D	E	D	C	E	C	D
Approach Vol, veh/h		910			611			2374			1618	
Approach Delay, s/veh		44.3			41.0			43.8			37.4	
Approach LOS		D			D			D			D	

Timer - Assigned Phs	1	2	3	4	5	6	7	8
Phs Duration (G+Y+Rc), s	10.3	43.9	9.9	36.9	18.2	36.0	22.1	24.8
Change Period (Y+Rc), s	4.6	5.8	4.6	5.4	4.6	5.8	4.6	5.4
Max Green Setting (Gmax), s	5.7	38.2	7.4	48.3	13.6	30.3	17.7	38.0
Max Q Clear Time (g_c+I1), s	6.4	36.7	5.5	8.0	14.2	22.6	17.4	16.0
Green Ext Time (p_c), s	0.0	1.4	0.0	2.0	0.0	5.7	0.0	2.3

Intersection Summary	
HCM 7th Control Delay, s/veh	41.7
HCM 7th LOS	D

Lane Group	EBL	EBT	EBR	WBL	WBT	WBR	NBL	NBT	SBL	SBT
Lane Configurations										
Traffic Volume (vph)	52	87	63	79	105	227	46	1286	119	633
Future Volume (vph)	52	87	63	79	105	227	46	1286	119	633
Turn Type	Prot	NA	Perm	Prot	NA	Perm	Prot	NA	Prot	NA
Protected Phases	7	4		3	8		5	2	1	6
Permitted Phases			4			8				
Detector Phase	7	4	4	3	8	8	5	2	1	6
Switch Phase										
Minimum Initial (s)	5.0	10.0	10.0	5.0	10.0	10.0	5.0	10.0	5.0	10.0
Minimum Split (s)	9.6	34.1	34.1	9.6	33.8	33.8	9.6	35.8	9.6	33.8
Total Split (s)	9.9	34.2	34.2	12.0	36.3	36.3	13.4	58.8	15.0	60.4
Total Split (%)	8.3%	28.5%	28.5%	10.0%	30.3%	30.3%	11.2%	49.0%	12.5%	50.3%
Yellow Time (s)	3.6	4.1	4.1	3.6	4.8	4.8	3.6	4.8	3.6	4.8
All-Red Time (s)	1.0	1.0	1.0	1.0	1.0	1.0	1.0	1.0	1.0	1.0
Lost Time Adjust (s)	0.0	0.0	0.0	0.0	0.0	0.0	0.0	0.0	0.0	0.0
Total Lost Time (s)	4.6	5.1	5.1	4.6	5.8	5.8	4.6	5.8	4.6	5.8
Lead/Lag	Lead	Lag	Lag	Lead	Lag	Lag	Lead	Lag	Lead	Lag
Lead-Lag Optimize?	Yes	Yes	Yes	Yes	Yes	Yes	Yes	Yes	Yes	Yes
Recall Mode	None	None	None	None	None	None	None	Min	None	Min
Act Effct Green (s)	5.3	14.3	14.3	7.3	17.7	17.7	7.2	53.3	10.2	58.3
Actuated g/C Ratio	0.05	0.14	0.14	0.07	0.17	0.17	0.07	0.51	0.10	0.55
v/c Ratio	0.34	0.39	0.23	0.72	0.38	0.64	0.43	0.96	0.78	0.38
Control Delay (s/veh)	56.1	45.3	3.9	81.3	43.1	22.3	60.0	40.4	77.6	15.6
Queue Delay	0.0	0.0	0.0	0.0	0.0	0.0	0.0	0.0	0.0	0.0
Total Delay (s/veh)	56.1	45.3	3.9	81.3	43.1	22.3	60.0	40.4	77.6	15.6
LOS	E	D	A	F	D	C	E	D	E	B
Approach Delay (s/veh)		35.1			39.0			41.0		25.1
Approach LOS		D			D			D		C

Intersection Summary	
Cycle Length: 120	
Actuated Cycle Length: 105.3	
Natural Cycle: 120	
Control Type: Actuated-Uncoordinated	
Maximum v/c Ratio: 0.96	
Intersection Signal Delay (s/veh): 36.1	Intersection LOS: D
Intersection Capacity Utilization 75.9%	ICU Level of Service D
Analysis Period (min) 15	

Splits and Phases: 4: La Sierra Av. & Victoria Av.

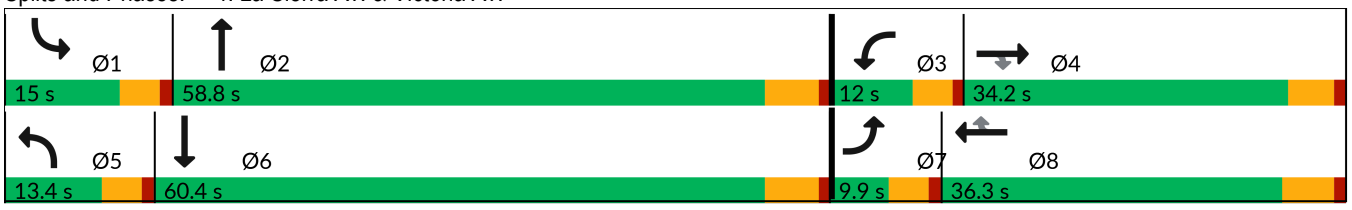

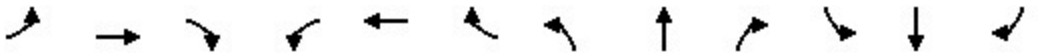

Movement	EBL	EBT	EBR	WBL	WBT	WBR	NBL	NBT	NBR	SBL	SBT	SBR
Lane Configurations												
Traffic Volume (veh/h)	52	87	63	79	105	227	46	1286	223	119	633	29
Future Volume (veh/h)	52	87	63	79	105	227	46	1286	223	119	633	29
Initial Q (Qb), veh	0	0	0	0	0	0	0	0	0	0	0	0
Lane Width Adj.	1.00	1.00	1.00	1.00	1.00	1.00	1.00	1.00	1.00	1.00	1.00	1.00
Ped-Bike Adj(A_pbT)	1.00		0.99	1.00		0.98	1.00		1.00	1.00		1.00
Parking Bus, Adj	1.00	1.00	1.00	1.00	1.00	1.00	1.00	1.00	1.00	1.00	1.00	1.00
Work Zone On Approach		No			No			No			No	
Adj Sat Flow, veh/h/ln	1870	1870	1870	1870	1870	1870	1870	1870	1870	1870	1870	1870
Adj Flow Rate, veh/h	58	98	32	89	118	170	52	1445	222	134	711	32
Peak Hour Factor	0.89	0.89	0.89	0.89	0.89	0.89	0.89	0.89	0.89	0.89	0.89	0.89
Percent Heavy Veh, %	2	2	2	2	2	2	2	2	2	2	2	2
Cap, veh/h	138	224	188	113	268	222	68	1600	243	163	1977	89
Arrive On Green	0.04	0.12	0.12	0.06	0.14	0.14	0.04	0.52	0.52	0.09	0.57	0.57
Sat Flow, veh/h	3456	1870	1563	1781	1870	1551	1781	3094	469	1781	3463	156
Grp Volume(v), veh/h	58	98	32	89	118	170	52	822	845	134	365	378
Grp Sat Flow(s),veh/h/ln	1728	1870	1563	1781	1870	1551	1781	1777	1786	1781	1777	1842
Q Serve(g_s), s	1.6	4.9	1.8	4.9	5.8	10.6	2.9	41.6	43.5	7.4	11.1	11.1
Cycle Q Clear(g_c), s	1.6	4.9	1.8	4.9	5.8	10.6	2.9	41.6	43.5	7.4	11.1	11.1
Prop In Lane	1.00		1.00	1.00		1.00	1.00		0.26	1.00		0.08
Lane Grp Cap(c), veh/h	138	224	188	113	268	222	68	919	924	163	1014	1052
V/C Ratio(X)	0.42	0.44	0.17	0.79	0.44	0.76	0.76	0.89	0.92	0.82	0.36	0.36
Avail Cap(c_a), veh/h	183	543	454	132	569	472	156	940	945	185	1014	1052
HCM Platoon Ratio	1.00	1.00	1.00	1.00	1.00	1.00	1.00	1.00	1.00	1.00	1.00	1.00
Upstream Filter(I)	1.00	1.00	1.00	1.00	1.00	1.00	1.00	1.00	1.00	1.00	1.00	1.00
Uniform Delay (d), s/veh	47.0	40.9	39.6	46.3	39.2	41.3	47.8	21.7	22.2	44.7	11.6	11.6
Incr Delay (d2), s/veh	0.8	1.3	0.4	19.8	1.1	5.4	6.5	11.1	13.3	19.9	0.3	0.3
Initial Q Delay(d3), s/veh	0.0	0.0	0.0	0.0	0.0	0.0	0.0	0.0	0.0	0.0	0.0	0.0
%ile BackOfQ(50%),veh/ln	0.7	2.3	0.7	2.7	2.6	4.2	1.4	17.9	19.2	4.0	3.9	4.1
Unsig. Movement Delay, s/veh												
LnGrp Delay(d), s/veh	47.7	42.3	40.0	66.1	40.4	46.7	54.3	32.8	35.5	64.6	11.9	11.9
LnGrp LOS	D	D	D	E	D	D	D	C	D	E	B	B
Approach Vol, veh/h		188			377			1719			877	
Approach Delay, s/veh		43.6			49.3			34.8			20.0	
Approach LOS		D			D			C			B	

Timer - Assigned Phs	1	2	3	4	5	6	7	8
Phs Duration (G+Y+Rc), s	13.8	57.6	11.0	17.8	8.4	63.0	8.6	20.2
Change Period (Y+Rc), s	4.6	5.8	4.6	* 5.8	4.6	5.8	4.6	5.8
Max Green Setting (Gmax), s	10.4	53.0	7.4	* 29	8.8	54.6	5.3	30.5
Max Q Clear Time (g_c+I1), s	9.4	45.5	6.9	6.9	4.9	13.1	3.6	12.6
Green Ext Time (p_c), s	0.0	6.4	0.0	0.5	0.0	7.1	0.0	1.0

Intersection Summary	
HCM 7th Control Delay, s/veh	32.9
HCM 7th LOS	C

Notes

* HCM 7th computational engine requires equal clearance times for the phases crossing the barrier.

Lane Group	WBL	WBR	NBT	NBR	SBL	SBT
Lane Configurations						
Traffic Volume (vph)	20	257	1386	25	89	625
Future Volume (vph)	20	257	1386	25	89	625
Turn Type	Prot	Perm	NA	Perm	Prot	NA
Protected Phases	8		2		1	6
Permitted Phases		8		2		
Detector Phase	8	8	2	2	1	6
Switch Phase						
Minimum Initial (s)	10.0	10.0	10.0	10.0	5.0	10.0
Minimum Split (s)	33.4	33.4	27.5	27.5	9.6	16.5
Total Split (s)	36.0	36.0	64.0	64.0	20.0	84.0
Total Split (%)	30.0%	30.0%	53.3%	53.3%	16.7%	70.0%
Yellow Time (s)	4.4	4.4	5.5	5.5	3.6	5.5
All-Red Time (s)	1.0	1.0	1.0	1.0	1.0	1.0
Lost Time Adjust (s)	0.0	0.0	0.0	0.0	0.0	0.0
Total Lost Time (s)	5.4	5.4	6.5	6.5	4.6	6.5
Lead/Lag			Lag	Lag	Lead	
Lead-Lag Optimize?			Yes	Yes	Yes	
Recall Mode	None	None	Min	Min	None	Min
Act Effct Green (s)	13.7	13.7	50.8	50.8	9.9	62.4
Actuated g/C Ratio	0.15	0.15	0.57	0.57	0.11	0.70
v/c Ratio	0.08	0.65	0.77	0.03	0.51	0.28
Control Delay (s/veh)	36.5	16.1	19.8	7.2	51.3	5.5
Queue Delay	0.0	0.0	0.0	0.0	0.0	0.0
Total Delay (s/veh)	36.5	16.1	19.8	7.2	51.3	5.5
LOS	D	B	B	A	D	A
Approach Delay (s/veh)	17.5		19.6			11.2
Approach LOS	B		B			B

Intersection Summary	
Cycle Length: 120	
Actuated Cycle Length: 88.7	
Natural Cycle: 90	
Control Type: Actuated-Uncoordinated	
Maximum v/c Ratio: 0.77	
Intersection Signal Delay (s/veh): 16.9	Intersection LOS: B
Intersection Capacity Utilization 65.3%	ICU Level of Service C
Analysis Period (min) 15	

Splits and Phases: 5: La Sierra Av. & McAllister Pkwy.

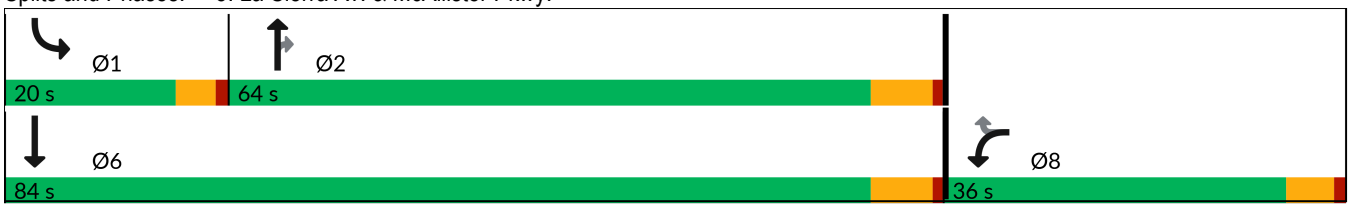



Movement	WBL	WBR	NBT	NBR	SBL	SBT
Lane Configurations						
Traffic Volume (veh/h)	20	257	1386	25	89	625
Future Volume (veh/h)	20	257	1386	25	89	625
Initial Q (Qb), veh	0	0	0	0	0	0
Lane Width Adj.	1.00	1.00	1.00	1.00	1.00	1.00
Ped-Bike Adj(A_pbT)	1.00	1.00		1.00	1.00	
Parking Bus, Adj	1.00	1.00	1.00	1.00	1.00	1.00
Work Zone On Approach	No		No			No
Adj Sat Flow, veh/h/ln	1870	1870	1870	1870	1870	1870
Adj Flow Rate, veh/h	22	171	1557	25	100	702
Peak Hour Factor	0.89	0.89	0.89	0.89	0.89	0.89
Percent Heavy Veh, %	2	2	2	2	2	2
Cap, veh/h	241	214	2067	922	129	2533
Arrive On Green	0.14	0.14	0.58	0.58	0.07	0.71
Sat Flow, veh/h	1781	1585	3647	1585	1781	3647
Grp Volume(v), veh/h	22	171	1557	25	100	702
Grp Sat Flow(s),veh/h/ln	1781	1585	1777	1585	1781	1777
Q Serve(g_s), s	0.8	8.2	25.5	0.5	4.3	5.5
Cycle Q Clear(g_c), s	0.8	8.2	25.5	0.5	4.3	5.5
Prop In Lane	1.00	1.00		1.00	1.00	
Lane Grp Cap(c), veh/h	241	214	2067	922	129	2533
V/C Ratio(X)	0.09	0.80	0.75	0.03	0.78	0.28
Avail Cap(c_a), veh/h	698	621	2615	1167	351	3525
HCM Platoon Ratio	1.00	1.00	1.00	1.00	1.00	1.00
Upstream Filter(I)	1.00	1.00	1.00	1.00	1.00	1.00
Uniform Delay (d), s/veh	29.6	32.8	12.2	7.0	35.6	4.0
Incr Delay (d2), s/veh	0.2	6.7	1.2	0.0	3.8	0.1
Initial Q Delay(d3), s/veh	0.0	0.0	0.0	0.0	0.0	0.0
%ile BackOfQ(50%),veh/ln	0.4	3.4	7.3	0.1	1.8	1.0
Unsig. Movement Delay, s/veh						
LnGrp Delay(d), s/veh	29.8	39.5	13.3	7.0	39.4	4.1
LnGrp LOS	C	D	B	A	D	A
Approach Vol, veh/h	193		1582			802
Approach Delay, s/veh	38.4		13.2			8.5
Approach LOS	D		B			A

Timer - Assigned Phs	1	2				6	8
Phs Duration (G+Y+Rc), s	10.2	51.9				62.2	16.0
Change Period (Y+Rc), s	4.6	6.5				6.5	5.4
Max Green Setting (Gmax), s	15.4	57.5				77.5	30.6
Max Q Clear Time (g_c+I1), s	6.3	27.5				7.5	10.2
Green Ext Time (p_c), s	0.1	17.9				7.2	0.5

Intersection Summary	
HCM 7th Control Delay, s/veh	13.6
HCM 7th LOS	B

Intersection	
Intersection Delay, s/veh	71.3
Intersection LOS	F

Movement	WBL	WBR	NBT	NBR	SBL	SBT
Lane Configurations						
Traffic Vol, veh/h	89	668	122	31	311	143
Future Vol, veh/h	89	668	122	31	311	143
Peak Hour Factor	0.95	0.95	0.95	0.95	0.95	0.95
Heavy Vehicles, %	2	2	2	2	2	2
Mvmt Flow	94	703	128	33	327	151
Number of Lanes	1	0	2	0	1	1

Approach	WB	NB	SB
Opposing Approach		SB	NB
Opposing Lanes	0	2	2
Conflicting Approach Left	NB		WB
Conflicting Lanes Left	2	0	1
Conflicting Approach Right	SB	WB	
Conflicting Lanes Right	2	1	0
HCM Control Delay, s/veh	113.3	12.1	21.1
HCM LOS	F	B	C

Lane	NBLn1	NBLn2	WBLn1	SBLn1	SBLn2
Vol Left, %	0%	0%	12%	100%	0%
Vol Thru, %	100%	57%	0%	0%	100%
Vol Right, %	0%	43%	88%	0%	0%
Sign Control	Stop	Stop	Stop	Stop	Stop
Traffic Vol by Lane	81	72	757	311	143
LT Vol	0	0	89	311	0
Through Vol	81	41	0	0	143
RT Vol	0	31	668	0	0
Lane Flow Rate	86	75	797	327	151
Geometry Grp	5	5	2	5	5
Degree of Util (X)	0.176	0.148	1.174	0.666	0.285
Departure Headway (Hd)	7.96	7.645	5.305	7.818	7.303
Convergence, Y/N	Yes	Yes	Yes	Yes	Yes
Cap	454	472	693	465	495
Service Time	5.66	5.345	3.305	5.518	5.003
HCM Lane V/C Ratio	0.189	0.159	1.15	0.703	0.305
HCM Control Delay, s/veh	12.4	11.7	113.3	24.8	12.9
HCM Lane LOS	B	B	F	C	B
HCM 95th-tile Q	0.6	0.5	26.2	4.8	1.2

Intersection	
Intersection Delay, s/veh	16
Intersection LOS	C

Movement	EBL	EBT	WBT	WBR	SBL	SBR
Lane Configurations						
Traffic Vol, veh/h	55	307	674	129	63	79
Future Vol, veh/h	55	307	674	129	63	79
Peak Hour Factor	0.96	0.96	0.96	0.96	0.96	0.96
Heavy Vehicles, %	2	2	2	2	2	2
Mvmt Flow	57	320	702	134	66	82
Number of Lanes	1	1	2	0	1	0

Approach	EB	WB	SB
Opposing Approach	WB	EB	
Opposing Lanes	2	2	0
Conflicting Approach Left	SB		WB
Conflicting Lanes Left	1	0	2
Conflicting Approach Right		SB	EB
Conflicting Lanes Right	0	1	2
HCM Control Delay, s/veh	14.5	17.6	11.2
HCM LOS	B	C	B

Lane	EBLn1	EBLn2	WBLn1	WBLn2	SBLn1
Vol Left, %	100%	0%	0%	0%	44%
Vol Thru, %	0%	100%	100%	64%	0%
Vol Right, %	0%	0%	0%	36%	56%
Sign Control	Stop	Stop	Stop	Stop	Stop
Traffic Vol by Lane	55	307	449	354	142
LT Vol	55	0	0	0	63
Through Vol	0	307	449	225	0
RT Vol	0	0	0	129	79
Lane Flow Rate	57	320	468	368	148
Geometry Grp	5	5	5	5	2
Degree of Util (X)	0.103	0.531	0.712	0.534	0.251
Departure Headway (Hd)	6.488	5.982	5.478	5.22	6.109
Convergence, Y/N	Yes	Yes	Yes	Yes	Yes
Cap	553	604	660	693	589
Service Time	4.219	3.713	3.2	2.942	4.139
HCM Lane V/C Ratio	0.103	0.53	0.709	0.531	0.251
HCM Control Delay, s/veh	10	15.3	20.6	13.8	11.2
HCM Lane LOS	A	C	C	B	B
HCM 95th-tile Q	0.3	3.1	5.9	3.2	1

Intersection	
Int Delay, s/veh	5.3

Movement	EBL	EBT	WBT	WBR	SBL	SBR
Lane Configurations						
Traffic Vol, veh/h	73	297	593	11	31	210
Future Vol, veh/h	73	297	593	11	31	210
Conflicting Peds, #/hr	0	0	0	0	0	0
Sign Control	Free	Free	Free	Free	Stop	Stop
RT Channelized	-	None	-	None	-	None
Storage Length	100	-	-	-	0	-
Veh in Median Storage, #	-	0	0	-	1	-
Grade, %	-	0	0	-	0	-
Peak Hour Factor	92	92	92	92	92	92
Heavy Vehicles, %	2	2	2	2	2	2
Mvmt Flow	79	323	645	12	34	228

Major/Minor	Major1		Major2		Minor2	
Conflicting Flow All	657	0	-	0	1132	651
Stage 1	-	-	-	-	651	-
Stage 2	-	-	-	-	482	-
Critical Hdwy	4.12	-	-	-	6.42	6.22
Critical Hdwy Stg 1	-	-	-	-	5.42	-
Critical Hdwy Stg 2	-	-	-	-	5.42	-
Follow-up Hdwy	2.218	-	-	-	3.518	3.318
Pot Cap-1 Maneuver	931	-	-	-	225	469
Stage 1	-	-	-	-	519	-
Stage 2	-	-	-	-	621	-
Platoon blocked, %			-	-	-	
Mov Cap-1 Maneuver	931	-	-	-	206	469
Mov Cap-2 Maneuver	-	-	-	-	337	-
Stage 1	-	-	-	-	475	-
Stage 2	-	-	-	-	621	-

Approach	EB	WB	SB
HCM Control Delay, s/v	1.82	0	23.9
HCM LOS			C

Minor Lane/Major Mvmt	EBL	EBT	WBT	WBR	SBLn1
Capacity (veh/h)	931	-	-	-	446
HCM Lane V/C Ratio	0.085	-	-	-	0.587
HCM Control Delay (s/veh)	9.2	-	-	-	23.9
HCM Lane LOS	A	-	-	-	C
HCM 95th %tile Q(veh)	0.3	-	-	-	3.7

Lane Group	WBL	WBT	WBR	NBL	NBT	SBT	SBR
Lane Configurations							
Traffic Volume (vph)	560	2	589	446	1032	1561	301
Future Volume (vph)	560	2	589	446	1032	1561	301
Turn Type	Split	NA	Perm	Prot	NA	NA	Perm
Protected Phases	8	8		5	2	6	
Permitted Phases			8				6
Detector Phase	8	8	8	5	2	6	6
Switch Phase							
Minimum Initial (s)	5.0	5.0	5.0	5.0	5.0	5.0	5.0
Minimum Split (s)	10.0	10.0	10.0	9.0	26.5	29.5	29.5
Total Split (s)	39.0	39.0	39.0	20.0	61.0	41.0	41.0
Total Split (%)	39.0%	39.0%	39.0%	20.0%	61.0%	41.0%	41.0%
Yellow Time (s)	4.0	4.0	4.0	3.0	4.5	4.5	4.5
All-Red Time (s)	1.0	1.0	1.0	1.0	1.0	1.0	1.0
Lost Time Adjust (s)	0.0	0.0	0.0	0.0	0.0	0.0	0.0
Total Lost Time (s)	5.0	5.0	5.0	4.0	5.5	5.5	5.5
Lead/Lag				Lead		Lag	Lag
Lead-Lag Optimize?				Yes		Yes	Yes
Recall Mode	None	None	None	None	C-Min	C-Min	C-Min
Act Effct Green (s)	29.5	29.5	29.5	16.1	60.0	40.0	40.0
Actuated g/C Ratio	0.30	0.30	0.30	0.16	0.60	0.40	0.40
v/c Ratio	0.83	0.79	0.74	0.84	0.35	0.78	0.41
Control Delay (s/veh)	47.2	37.8	33.0	39.9	24.8	30.8	10.8
Queue Delay	0.2	0.2	0.0	0.0	0.0	0.0	0.0
Total Delay (s/veh)	47.4	37.9	33.0	39.9	24.8	30.8	10.8
LOS	D	D	C	D	C	C	B
Approach Delay (s/veh)		39.6			29.3	27.6	
Approach LOS		D			C	C	

Intersection Summary	
Cycle Length: 100	
Actuated Cycle Length: 100	
Offset: 0 (0%), Referenced to phase 2:NBT and 6:SBT, Start of Yellow, Master Intersection	
Natural Cycle: 75	
Control Type: Actuated-Coordinated	
Maximum v/c Ratio: 0.84	
Intersection Signal Delay (s/veh): 31.2	Intersection LOS: C
Intersection Capacity Utilization 79.8%	ICU Level of Service D
Analysis Period (min) 15	

Splits and Phases: 1: La Sierra Av. & SR-91 WB Ramps

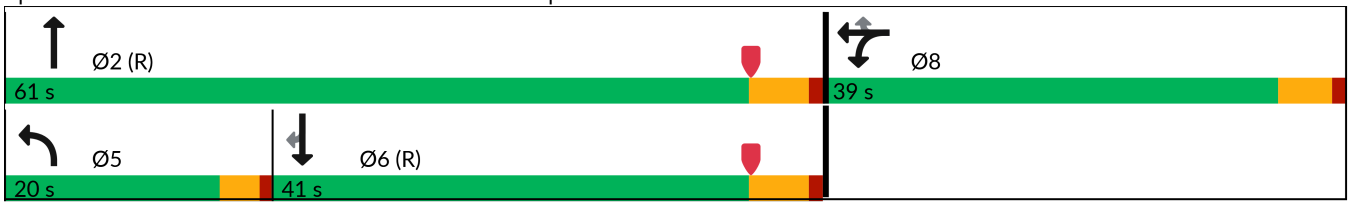

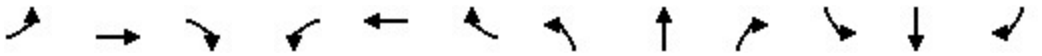

Movement	EBL	EBT	EBR	WBL	WBT	WBR	NBL	NBT	NBR	SBL	SBT	SBR
Lane Configurations												
Traffic Volume (veh/h)	0	0	0	560	2	589	446	1032	0	0	1561	301
Future Volume (veh/h)	0	0	0	560	2	589	446	1032	0	0	1561	301
Initial Q (Qb), veh				0	0	0	0	0	0	0	0	0
Lane Width Adj.				1.00	1.00	1.00	1.00	1.00	1.00	1.00	1.00	1.00
Ped-Bike Adj(A_pbT)				1.00		1.00	1.00		1.00	1.00		0.98
Parking Bus, Adj				1.00	1.00	1.00	1.00	1.00	1.00	1.00	1.00	1.00
Work Zone On Approach					No			No			No	
Adj Sat Flow, veh/h/ln				1870	1900	1900	1856	1885	0	0	1885	1900
Adj Flow Rate, veh/h				700	0	263	460	1064	0	0	1609	224
Peak Hour Factor				0.97	0.97	0.97	0.97	0.97	0.97	0.97	0.97	0.97
Percent Heavy Veh, %				2	0	0	3	1	0	0	1	0
Cap, veh/h				823	0	372	514	3417	0	0	2440	751
Arrive On Green				0.23	0.00	0.23	0.30	1.00	0.00	0.00	0.47	0.47
Sat Flow, veh/h				3563	0	1610	3428	5316	0	0	5316	1584
Grp Volume(v), veh/h				700	0	263	460	1064	0	0	1609	224
Grp Sat Flow(s),veh/h/ln				1781	0	1610	1714	1716	0	0	1716	1584
Q Serve(g_s), s				18.8	0.0	15.0	12.8	0.0	0.0	0.0	23.9	8.7
Cycle Q Clear(g_c), s				18.8	0.0	15.0	12.8	0.0	0.0	0.0	23.9	8.7
Prop In Lane				1.00		1.00	1.00		0.00	0.00		1.00
Lane Grp Cap(c), veh/h				823	0	372	514	3417	0	0	2440	751
V/C Ratio(X)				0.85	0.00	0.71	0.90	0.31	0.00	0.00	0.66	0.30
Avail Cap(c_a), veh/h				1211	0	547	549	3417	0	0	2440	751
HCM Platoon Ratio				1.00	1.00	1.00	2.00	2.00	1.00	1.00	1.00	1.00
Upstream Filter(I)				1.00	0.00	1.00	0.61	0.61	0.00	0.00	1.00	1.00
Uniform Delay (d), s/veh				36.8	0.0	35.3	34.3	0.0	0.0	0.0	20.1	16.1
Incr Delay (d2), s/veh				3.4	0.0	1.8	10.5	0.1	0.0	0.0	1.4	1.0
Initial Q Delay(d3), s/veh				0.0	0.0	0.0	0.0	0.0	0.0	0.0	0.0	0.0
%ile BackOfQ(50%),veh/ln				8.1	0.0	5.8	5.0	0.0	0.0	0.0	8.9	3.1
Unsig. Movement Delay, s/veh												
LnGrp Delay(d), s/veh				40.2	0.0	37.2	44.8	0.1	0.0	0.0	21.5	17.1
LnGrp LOS				D		D	D	A			C	B
Approach Vol, veh/h					963			1524			1833	
Approach Delay, s/veh					39.4			13.6			21.0	
Approach LOS					D			B			C	

Timer - Assigned Phs	2		5	6		8						
Phs Duration (G+Y+Rc), s	71.9		19.0	52.9		28.1						
Change Period (Y+Rc), s	5.5		4.0	5.5		5.0						
Max Green Setting (Gmax), s	55.5		16.0	35.5		34.0						
Max Q Clear Time (g_c+I1), s	2.0		14.8	25.9		20.8						
Green Ext Time (p_c), s	8.6		0.1	6.9		2.3						

Intersection Summary		
HCM 7th Control Delay, s/veh	22.5	
HCM 7th LOS	C	

Notes
User approved volume balancing among the lanes for turning movement.

Lane Group	EBL	EBT	EBR	NBT	NBR	SBL	SBT
Lane Configurations							
Traffic Volume (vph)	225	11	940	1237	352	456	1669
Future Volume (vph)	225	11	940	1237	352	456	1669
Turn Type	Split	NA	Perm	NA	Perm	Prot	NA
Protected Phases	4	4		2		1	6
Permitted Phases			4		2		
Detector Phase	4	4	4	2	2	1	6
Switch Phase							
Minimum Initial (s)	5.0	5.0	5.0	5.0	5.0	5.0	5.0
Minimum Split (s)	10.0	10.0	10.0	29.5	29.5	9.0	26.5
Total Split (s)	48.0	48.0	48.0	33.0	33.0	19.0	52.0
Total Split (%)	48.0%	48.0%	48.0%	33.0%	33.0%	19.0%	52.0%
Yellow Time (s)	4.0	4.0	4.0	4.5	4.5	3.0	4.5
All-Red Time (s)	1.0	1.0	1.0	1.0	1.0	1.0	1.0
Lost Time Adjust (s)	0.0	0.0	0.0	0.0	0.0	0.0	0.0
Total Lost Time (s)	5.0	5.0	5.0	5.5	5.5	4.0	5.5
Lead/Lag				Lag	Lag	Lead	
Lead-Lag Optimize?				Yes	Yes	Yes	
Recall Mode	None	None	None	C-Min	C-Min	None	C-Min
Act Effct Green (s)	38.7	38.7	38.7	31.0	31.0	15.8	50.8
Actuated g/C Ratio	0.39	0.39	0.39	0.31	0.31	0.16	0.51
v/c Ratio	0.32	0.88	0.80	0.80	0.49	0.86	0.65
Control Delay (s/veh)	21.9	46.0	33.7	37.4	5.7	36.3	12.8
Queue Delay	0.0	0.0	0.0	0.0	0.0	0.0	0.4
Total Delay (s/veh)	21.9	46.0	33.7	37.4	5.7	36.3	13.2
LOS	C	D	C	D	A	D	B
Approach Delay (s/veh)		36.7		30.4			18.2
Approach LOS		D		C			B

Intersection Summary	
Cycle Length: 100	
Actuated Cycle Length: 100	
Offset: 28 (28%), Referenced to phase 2:NBT and 6:SBT, Start of Yellow	
Natural Cycle: 80	
Control Type: Actuated-Coordinated	
Maximum v/c Ratio: 0.88	
Intersection Signal Delay (s/veh): 26.6	Intersection LOS: C
Intersection Capacity Utilization 79.8%	ICU Level of Service D
Analysis Period (min) 15	

Splits and Phases: 2: La Sierra Av. & SR-91 EB Ramps

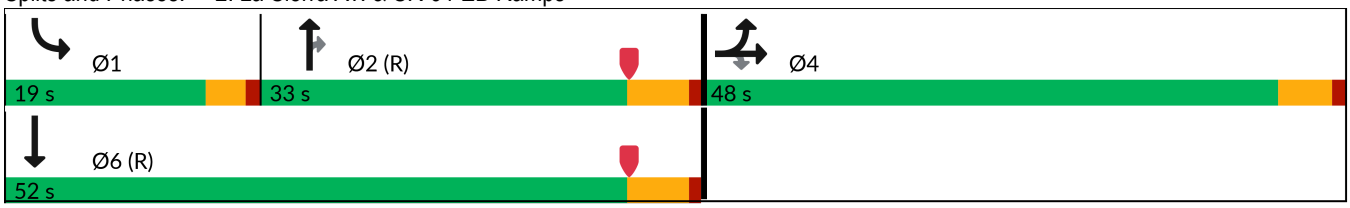

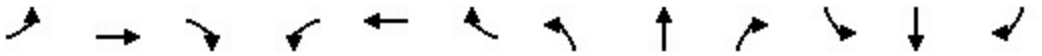

Movement	EBL	EBT	EBR	WBL	WBT	WBR	NBL	NBT	NBR	SBL	SBT	SBR
Lane Configurations												
Traffic Volume (veh/h)	225	11	940	0	0	0	0	1237	352	456	1669	0
Future Volume (veh/h)	225	11	940	0	0	0	0	1237	352	456	1669	0
Initial Q (Qb), veh	0	0	0				0	0	0	0	0	0
Lane Width Adj.	1.00	1.00	1.00				1.00	1.00	1.00	1.00	1.00	1.00
Ped-Bike Adj(A_pbT)	1.00		1.00				1.00		0.98	1.00		1.00
Parking Bus, Adj	1.00	1.00	1.00				1.00	1.00	1.00	1.00	1.00	1.00
Work Zone On Approach		No						No			No	
Adj Sat Flow, veh/h/ln	1870	1752	1856				0	1870	1885	1870	1885	0
Adj Flow Rate, veh/h	157	0	809				0	1262	221	465	1703	0
Peak Hour Factor	0.98	0.98	0.98				0.98	0.98	0.98	0.98	0.98	0.98
Percent Heavy Veh, %	2	10	3				0	2	1	2	1	0
Cap, veh/h	521	0	921				0	2105	648	518	3100	0
Arrive On Green	0.29	0.00	0.29				0.00	0.41	0.41	0.05	0.20	0.00
Sat Flow, veh/h	1781	0	3145				0	5274	1572	3456	5316	0
Grp Volume(v), veh/h	157	0	809				0	1262	221	465	1703	0
Grp Sat Flow(s),veh/h/ln	1781	0	1572				0	1702	1572	1728	1716	0
Q Serve(g_s), s	6.8	0.0	24.5				0.0	19.3	9.6	13.4	29.8	0.0
Cycle Q Clear(g_c), s	6.8	0.0	24.5				0.0	19.3	9.6	13.4	29.8	0.0
Prop In Lane	1.00		1.00				0.00		1.00	1.00		0.00
Lane Grp Cap(c), veh/h	521	0	921				0	2105	648	518	3100	0
V/C Ratio(X)	0.30	0.00	0.88				0.00	0.60	0.34	0.90	0.55	0.00
Avail Cap(c_a), veh/h	766	0	1352				0	2105	648	518	3100	0
HCM Platoon Ratio	1.00	1.00	1.00				1.00	1.00	1.00	0.33	0.33	1.00
Upstream Filter(I)	1.00	0.00	1.00				0.00	0.59	0.59	0.51	0.51	0.00
Uniform Delay (d), s/veh	27.4	0.0	33.7				0.0	22.9	20.1	46.8	27.9	0.0
Incr Delay (d2), s/veh	0.2	0.0	4.3				0.0	0.8	0.8	10.4	0.4	0.0
Initial Q Delay(d3), s/veh	0.0	0.0	0.0				0.0	0.0	0.0	0.0	0.0	0.0
%ile BackOfQ(50%),veh/ln	2.8	0.0	9.3				0.0	7.3	3.4	6.9	13.5	0.0
Unsig. Movement Delay, s/veh												
LnGrp Delay(d), s/veh	27.7	0.0	37.9				0.0	23.7	20.9	57.2	28.2	0.0
LnGrp LOS	C		D					C	C	E	C	
Approach Vol, veh/h		966						1483			2168	
Approach Delay, s/veh		36.3						23.3			34.4	
Approach LOS		D						C			C	

Timer - Assigned Phs	1	2		4		6
Phs Duration (G+Y+Rc), s	19.0	46.7		34.3		65.7
Change Period (Y+Rc), s	4.0	5.5		5.0		5.5
Max Green Setting (Gmax), s	15.0	27.5		43.0		46.5
Max Q Clear Time (g_c+I1), s	15.4	21.3		26.5		31.8
Green Ext Time (p_c), s	0.0	4.1		2.8		9.5

Intersection Summary	
HCM 7th Control Delay, s/veh	31.2
HCM 7th LOS	C

Notes

User approved volume balancing among the lanes for turning movement.

Lane Group	EBL	EBT	EBR	WBL	WBT	WBR	NBL	NBT	NBR	SBL	SBT	SBR
Lane Configurations												
Traffic Volume (vph)	416	386	433	189	213	274	253	971	133	318	1751	420
Future Volume (vph)	416	386	433	189	213	274	253	971	133	318	1751	420
Turn Type	Prot	NA	Perm	Prot	NA	Perm	Prot	NA	Perm	Prot	NA	Perm
Protected Phases	7	4		3	8		5	2		1	6	
Permitted Phases			4			8			2			6
Detector Phase	7	4	4	3	8	8	5	2	2	1	6	6
Switch Phase												
Minimum Initial (s)	5.0	10.0	10.0	5.0	10.0	10.0	5.0	10.0	10.0	5.0	10.0	10.0
Minimum Split (s)	9.6	43.4	43.4	9.6	43.4	43.4	9.6	37.8	37.8	9.6	32.8	32.8
Total Split (s)	17.0	46.0	46.0	14.4	43.4	43.4	13.0	41.9	41.9	17.7	46.6	46.6
Total Split (%)	14.2%	38.3%	38.3%	12.0%	36.2%	36.2%	10.8%	34.9%	34.9%	14.8%	38.8%	38.8%
Yellow Time (s)	3.6	4.4	4.4	3.6	4.4	4.4	3.6	4.8	4.8	3.6	4.8	4.8
All-Red Time (s)	1.0	1.0	1.0	1.0	1.0	1.0	1.0	1.0	1.0	1.0	1.0	1.0
Lost Time Adjust (s)	0.0	0.0	0.0	0.0	0.0	0.0	0.0	0.0	0.0	0.0	0.0	0.0
Total Lost Time (s)	4.6	5.4	5.4	4.6	5.4	5.4	4.6	5.8	5.8	4.6	5.8	5.8
Lead/Lag	Lead	Lag	Lag	Lead	Lag	Lag	Lead	Lag	Lag	Lead	Lag	Lag
Lead-Lag Optimize?	Yes	Yes	Yes	Yes	Yes	Yes	Yes	Yes	Yes	Yes	Yes	Yes
Recall Mode	None	None	None	None	None	None	None	Min	Min	None	Min	Min
Act Effct Green (s)	12.5	29.2	29.2	9.3	25.9	25.9	8.5	36.7	36.7	12.9	41.1	41.1
Actuated g/C Ratio	0.12	0.27	0.27	0.09	0.24	0.24	0.08	0.34	0.34	0.12	0.38	0.38
v/c Ratio	1.14	0.44	0.87	0.70	0.27	0.59	1.03	0.61	0.23	0.85	0.99	0.53
Control Delay (s/veh)	135.3	33.8	39.9	63.5	33.3	18.8	113.2	33.4	5.8	67.9	52.8	5.0
Queue Delay	0.0	0.0	0.0	0.0	0.0	0.0	0.0	0.0	0.0	0.0	0.0	0.0
Total Delay (s/veh)	135.3	33.8	39.9	63.5	33.3	18.8	113.2	33.4	5.8	67.9	52.8	5.0
LOS	F	C	D	E	C	B	F	C	A	E	D	A
Approach Delay (s/veh)		70.1			35.9			45.6			46.7	
Approach LOS		E			D			D			D	

Intersection Summary	
Cycle Length: 120	
Actuated Cycle Length: 108.6	
Natural Cycle: 115	
Control Type: Actuated-Uncoordinated	
Maximum v/c Ratio: 1.14	
Intersection Signal Delay (s/veh): 50.2	Intersection LOS: D
Intersection Capacity Utilization 81.2%	ICU Level of Service D
Analysis Period (min) 15	

Splits and Phases: 3: La Sierra Av. & Indiana Av./S. Indiana Av.

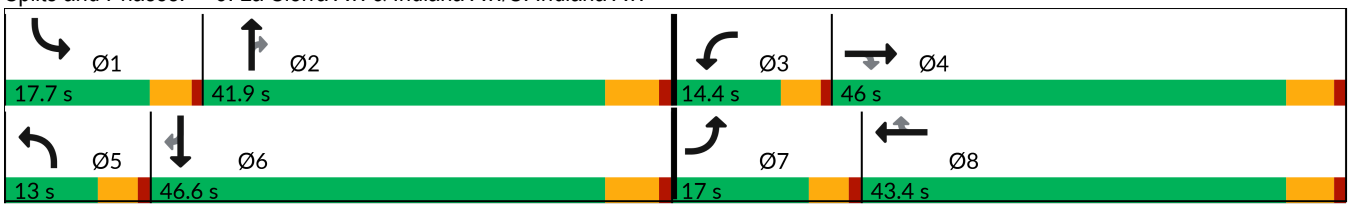

Movement	EBL	EBT	EBR	WBL	WBT	WBR	NBL	NBT	NBR	SBL	SBT	SBR
Lane Configurations												
Traffic Volume (veh/h)	416	386	433	189	213	274	253	971	133	318	1751	420
Future Volume (veh/h)	416	386	433	189	213	274	253	971	133	318	1751	420
Initial Q (Qb), veh	0	0	0	0	0	0	0	0	0	0	0	0
Lane Width Adj.	1.00	1.00	1.00	1.00	1.00	1.00	1.00	1.00	1.00	1.00	1.00	1.00
Ped-Bike Adj(A_pbT)	1.00		0.98	1.00		0.98	1.00		0.99	1.00		0.98
Parking Bus, Adj	1.00	1.00	1.00	1.00	1.00	1.00	1.00	1.00	1.00	1.00	1.00	1.00
Work Zone On Approach		No			No			No			No	
Adj Sat Flow, veh/h/ln	1870	1870	1870	1870	1870	1870	1870	1870	1870	1870	1870	1870
Adj Flow Rate, veh/h	452	420	319	205	232	233	275	1055	85	346	1903	332
Peak Hour Factor	0.92	0.92	0.92	0.92	0.92	0.92	0.92	0.92	0.92	0.92	0.92	0.92
Percent Heavy Veh, %	2	2	2	2	2	2	2	2	2	2	2	2
Cap, veh/h	406	935	407	268	792	347	275	1779	549	407	1974	599
Arrive On Green	0.12	0.26	0.26	0.08	0.22	0.22	0.08	0.35	0.35	0.12	0.39	0.39
Sat Flow, veh/h	3456	3554	1549	3456	3554	1558	3456	5106	1577	3456	5106	1549
Grp Volume(v), veh/h	452	420	319	205	232	233	275	1055	85	346	1903	332
Grp Sat Flow(s),veh/h/ln	1728	1777	1549	1728	1777	1558	1728	1702	1577	1728	1702	1549
Q Serve(g_s), s	12.4	10.4	20.2	6.1	5.7	14.4	8.4	17.9	3.9	10.4	38.5	17.7
Cycle Q Clear(g_c), s	12.4	10.4	20.2	6.1	5.7	14.4	8.4	17.9	3.9	10.4	38.5	17.7
Prop In Lane	1.00		1.00	1.00		1.00	1.00		1.00	1.00		1.00
Lane Grp Cap(c), veh/h	406	935	407	268	792	347	275	1779	549	407	1974	599
V/C Ratio(X)	1.11	0.45	0.78	0.77	0.29	0.67	1.00	0.59	0.15	0.85	0.96	0.55
Avail Cap(c_a), veh/h	406	1367	596	321	1280	561	275	1779	549	429	1974	599
HCM Platoon Ratio	1.00	1.00	1.00	1.00	1.00	1.00	1.00	1.00	1.00	1.00	1.00	1.00
Upstream Filter(I)	1.00	1.00	1.00	1.00	1.00	1.00	1.00	1.00	1.00	1.00	1.00	1.00
Uniform Delay (d), s/veh	46.6	32.5	36.1	47.7	34.1	37.5	48.6	28.2	23.7	45.6	31.6	25.3
Incr Delay (d2), s/veh	79.0	0.3	4.2	6.9	0.2	2.2	54.1	0.6	0.2	13.5	12.9	1.4
Initial Q Delay(d3), s/veh	0.0	0.0	0.0	0.0	0.0	0.0	0.0	0.0	0.0	0.0	0.0	0.0
%ile BackOfQ(50%),veh/ln	9.6	4.4	7.8	2.8	2.4	5.5	5.6	7.0	1.4	5.0	16.9	6.4
Unsig. Movement Delay, s/veh												
LnGrp Delay(d), s/veh	125.5	32.8	40.2	54.6	34.3	39.7	102.7	28.9	23.9	59.1	44.6	26.7
LnGrp LOS	F	C	D	D	C	D	F	C	C	E	D	C
Approach Vol, veh/h		1191			670			1415			2581	
Approach Delay, s/veh		70.0			42.4			42.9			44.2	
Approach LOS		E			D			D			D	

Timer - Assigned Phs	1	2	3	4	5	6	7	8
Phs Duration (G+Y+Rc), s	17.0	42.6	12.8	33.1	13.0	46.6	17.0	28.9
Change Period (Y+Rc), s	4.6	5.8	4.6	5.4	4.6	5.8	4.6	5.4
Max Green Setting (Gmax), s	13.1	36.1	9.8	40.6	8.4	40.8	12.4	38.0
Max Q Clear Time (g_c+I1), s	12.4	19.9	8.1	22.2	10.4	40.5	14.4	16.4
Green Ext Time (p_c), s	0.1	8.5	0.1	3.6	0.0	0.3	0.0	2.1

Intersection Summary	
HCM 7th Control Delay, s/veh	48.9
HCM 7th LOS	D

Lane Group	EBL	EBT	EBR	WBL	WBT	WBR	NBL	NBT	SBL	SBT
Lane Configurations										
Traffic Volume (vph)	65	117	166	311	84	194	30	888	213	1717
Future Volume (vph)	65	117	166	311	84	194	30	888	213	1717
Turn Type	Prot	NA	Perm	Prot	NA	Perm	Prot	NA	Prot	NA
Protected Phases	7	4		3	8		5	2	1	6
Permitted Phases			4			8				
Detector Phase	7	4	4	3	8	8	5	2	1	6
Switch Phase										
Minimum Initial (s)	5.0	10.0	10.0	5.0	10.0	10.0	5.0	10.0	5.0	10.0
Minimum Split (s)	9.6	34.1	34.1	9.6	33.8	33.8	9.6	35.8	9.6	33.8
Total Split (s)	10.4	34.1	34.1	20.0	43.7	43.7	9.6	42.9	23.0	56.3
Total Split (%)	8.7%	28.4%	28.4%	16.7%	36.4%	36.4%	8.0%	35.8%	19.2%	46.9%
Yellow Time (s)	3.6	4.1	4.1	3.6	4.8	4.8	3.6	4.8	3.6	4.8
All-Red Time (s)	1.0	1.0	1.0	1.0	1.0	1.0	1.0	1.0	1.0	1.0
Lost Time Adjust (s)	0.0	0.0	0.0	0.0	0.0	0.0	0.0	0.0	0.0	0.0
Total Lost Time (s)	4.6	5.1	5.1	4.6	5.8	5.8	4.6	5.8	4.6	5.8
Lead/Lag	Lead	Lag	Lag	Lead	Lag	Lag	Lead	Lag	Lead	Lag
Lead-Lag Optimize?	Yes	Yes	Yes	Yes	Yes	Yes	Yes	Yes	Yes	Yes
Recall Mode	None	None	None	None	None	None	None	Min	None	Min
Act Effct Green (s)	5.6	14.6	14.6	15.5	25.9	25.9	5.0	37.3	16.6	53.1
Actuated g/C Ratio	0.05	0.14	0.14	0.15	0.25	0.25	0.05	0.36	0.16	0.51
v/c Ratio	0.37	0.48	0.46	1.26	0.19	0.38	0.38	0.89	0.81	1.06
Control Delay (s/veh)	56.1	47.2	8.3	182.8	33.4	6.5	64.3	42.0	65.3	67.2
Queue Delay	0.0	0.0	0.0	0.0	0.0	0.0	0.0	0.0	0.0	0.0
Total Delay (s/veh)	56.1	47.2	8.3	182.8	33.4	6.5	64.3	42.0	65.3	67.2
LOS	E	D	A	F	C	A	E	D	E	E
Approach Delay (s/veh)		30.2			103.5			42.6		67.0
Approach LOS		C			F			D		E

Intersection Summary	
Cycle Length: 120	
Actuated Cycle Length: 104.3	
Natural Cycle: 120	
Control Type: Actuated-Uncoordinated	
Maximum v/c Ratio: 1.26	
Intersection Signal Delay (s/veh): 62.7	Intersection LOS: E
Intersection Capacity Utilization 91.3%	ICU Level of Service F
Analysis Period (min) 15	

Splits and Phases: 4: La Sierra Av. & Victoria Av.

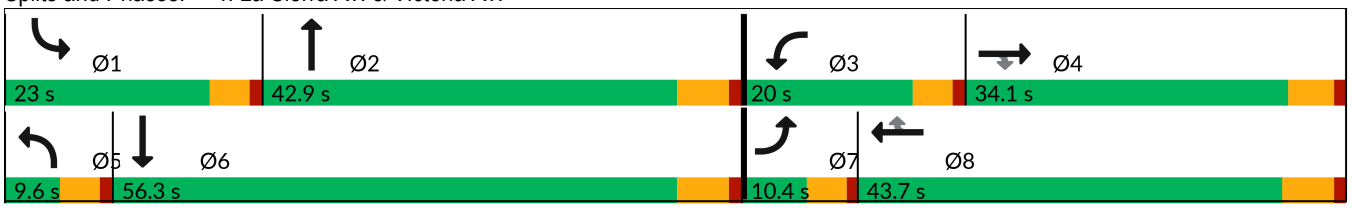

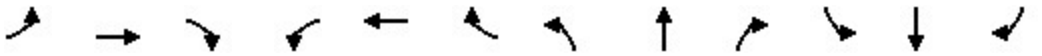

Movement	EBL	EBT	EBR	WBL	WBT	WBR	NBL	NBT	NBR	SBL	SBT	SBR
Lane Configurations												
Traffic Volume (veh/h)	65	117	166	311	84	194	30	888	151	213	1717	71
Future Volume (veh/h)	65	117	166	311	84	194	30	888	151	213	1717	71
Initial Q (Qb), veh	0	0	0	0	0	0	0	0	0	0	0	0
Lane Width Adj.	1.00	1.00	1.00	1.00	1.00	1.00	1.00	1.00	1.00	1.00	1.00	1.00
Ped-Bike Adj(A_pbT)	1.00		0.98	1.00		0.99	1.00		1.00	1.00		1.00
Parking Bus, Adj	1.00	1.00	1.00	1.00	1.00	1.00	1.00	1.00	1.00	1.00	1.00	1.00
Work Zone On Approach		No			No			No			No	
Adj Sat Flow, veh/h/ln	1870	1870	1870	1870	1870	1870	1870	1870	1870	1870	1870	1870
Adj Flow Rate, veh/h	69	124	87	331	89	126	32	945	81	227	1827	33
Peak Hour Factor	0.94	0.94	0.94	0.94	0.94	0.94	0.94	0.94	0.94	0.94	0.94	0.94
Percent Heavy Veh, %	2	2	2	2	2	2	2	2	2	2	2	2
Cap, veh/h	148	188	156	275	397	332	53	1294	111	260	1810	33
Arrive On Green	0.04	0.10	0.10	0.15	0.21	0.21	0.03	0.59	0.39	0.15	0.76	0.51
Sat Flow, veh/h	3456	1870	1559	1781	1870	1563	1781	3312	284	1781	3571	64
Grp Volume(v), veh/h	69	124	87	331	89	126	32	507	519	227	907	953
Grp Sat Flow(s),veh/h/ln	1728	1870	1559	1781	1870	1563	1781	1777	1819	1781	1777	1859
Q Serve(g_s), s	1.9	6.4	5.3	15.4	3.9	6.9	1.8	20.6	21.3	12.4	50.5	50.5
Cycle Q Clear(g_c), s	1.9	6.4	5.3	15.4	3.9	6.9	1.8	20.6	21.3	12.4	50.5	50.5
Prop In Lane	1.00		1.00	1.00		1.00	1.00		0.16	1.00		0.03
Lane Grp Cap(c), veh/h	148	188	156	275	397	332	53	694	711	260	901	942
V/C Ratio(X)	0.47	0.66	0.56	1.20	0.22	0.38	0.61	0.73	0.73	0.87	1.01	1.01
Avail Cap(c_a), veh/h	201	544	454	275	711	594	89	694	711	329	901	942
HCM Platoon Ratio	1.00	1.00	1.00	1.00	1.00	1.00	1.00	1.50	1.00	1.00	1.50	1.00
Upstream Filter(I)	1.00	1.00	1.00	1.00	1.00	1.00	1.00	1.00	1.00	1.00	1.00	1.00
Uniform Delay (d), s/veh	46.6	43.2	42.7	42.1	32.5	33.6	47.8	16.8	18.2	41.7	11.9	12.4
Incr Delay (d2), s/veh	0.9	3.9	3.1	120.4	0.3	0.7	4.2	4.3	4.2	16.1	31.6	32.3
Initial Q Delay(d3), s/veh	0.0	0.0	0.0	0.0	0.0	0.0	0.0	0.0	0.0	0.0	0.0	0.0
%ile BackOfQ(50%),veh/ln	0.8	3.1	2.1	15.7	1.7	2.6	0.8	6.5	7.2	6.4	13.8	14.9
Unsig. Movement Delay, s/veh												
LnGrp Delay(d), s/veh	47.4	47.1	45.8	162.5	32.7	34.3	52.0	21.1	22.4	57.8	43.6	44.7
LnGrp LOS	D	D	D	F	C	C	D	C	C	E	F	F
Approach Vol, veh/h		280			546			1058			2087	
Approach Delay, s/veh		46.8			111.8			22.7			45.6	
Approach LOS		D			F			C			D	

Timer - Assigned Phs	1	2	3	4	5	6	7	8
Phs Duration (G+Y+Rc), s	19.1	44.7	20.0	15.8	7.5	56.3	8.9	26.9
Change Period (Y+Rc), s	4.6	5.8	4.6	* 5.8	4.6	5.8	4.6	5.8
Max Green Setting (Gmax), s	18.4	37.1	15.4	* 29	5.0	50.5	5.8	37.9
Max Q Clear Time (g_c+I1), s	14.4	23.3	17.4	8.4	3.8	52.5	3.9	8.9
Green Ext Time (p_c), s	0.1	6.9	0.0	0.9	0.0	0.0	0.0	0.8

Intersection Summary	
HCM 7th Control Delay, s/veh	48.7
HCM 7th LOS	D

Notes

* HCM 7th computational engine requires equal clearance times for the phases crossing the barrier.

Lane Group	WBL	WBR	NBT	NBR	SBL	SBT
Lane Configurations						
Traffic Volume (vph)	9	169	901	14	305	1854
Future Volume (vph)	9	169	901	14	305	1854
Turn Type	Prot	Perm	NA	Perm	Prot	NA
Protected Phases	8		2		1	6
Permitted Phases		8		2		
Detector Phase	8	8	2	2	1	6
Switch Phase						
Minimum Initial (s)	10.0	10.0	10.0	10.0	5.0	10.0
Minimum Split (s)	33.4	33.4	27.5	27.5	9.6	16.5
Total Split (s)	35.0	35.0	47.0	47.0	38.0	85.0
Total Split (%)	29.2%	29.2%	39.2%	39.2%	31.7%	70.8%
Yellow Time (s)	4.4	4.4	5.5	5.5	3.6	5.5
All-Red Time (s)	1.0	1.0	1.0	1.0	1.0	1.0
Lost Time Adjust (s)	0.0	0.0	0.0	0.0	0.0	0.0
Total Lost Time (s)	5.4	5.4	6.5	6.5	4.6	6.5
Lead/Lag			Lag	Lag	Lead	
Lead-Lag Optimize?			Yes	Yes	Yes	
Recall Mode	None	None	Min	Min	None	Min
Act Effct Green (s)	13.1	13.1	35.1	35.1	21.9	61.8
Actuated g/C Ratio	0.15	0.15	0.40	0.40	0.25	0.71
v/c Ratio	0.04	0.46	0.67	0.02	0.73	0.79
Control Delay (s/veh)	35.9	10.0	25.8	12.3	42.0	12.0
Queue Delay	0.0	0.0	0.0	0.0	0.0	0.0
Total Delay (s/veh)	35.9	10.0	25.8	12.3	42.0	12.0
LOS	D	A	C	B	D	B
Approach Delay (s/veh)	11.3		25.6			16.2
Approach LOS	B		C			B

Intersection Summary	
Cycle Length: 120	
Actuated Cycle Length: 87.3	
Natural Cycle: 90	
Control Type: Actuated-Uncoordinated	
Maximum v/c Ratio: 0.79	
Intersection Signal Delay (s/veh): 18.6	Intersection LOS: B
Intersection Capacity Utilization 69.5%	ICU Level of Service C
Analysis Period (min) 15	

Splits and Phases: 5: La Sierra Av. & McAllister Pkwy.

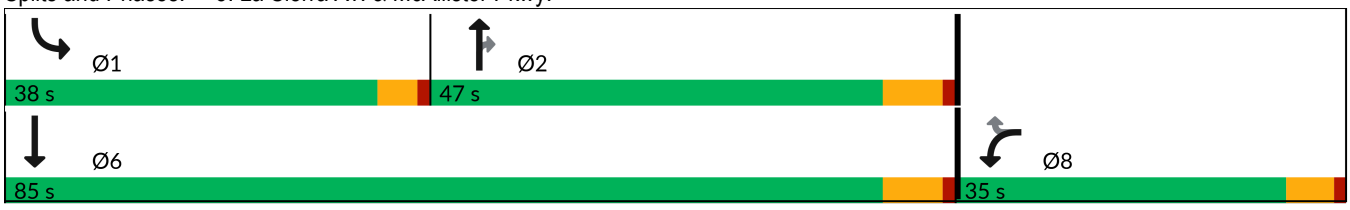



Movement	WBL	WBR	NBT	NBR	SBL	SBT
Lane Configurations						
Traffic Volume (veh/h)	9	169	901	14	305	1854
Future Volume (veh/h)	9	169	901	14	305	1854
Initial Q (Qb), veh	0	0	0	0	0	0
Lane Width Adj.	1.00	1.00	1.00	1.00	1.00	1.00
Ped-Bike Adj(A_pbT)	1.00	1.00		0.98	1.00	
Parking Bus, Adj	1.00	1.00	1.00	1.00	1.00	1.00
Work Zone On Approach	No		No			No
Adj Sat Flow, veh/h/ln	1870	1870	1870	1870	1870	1870
Adj Flow Rate, veh/h	10	74	959	15	324	1972
Peak Hour Factor	0.94	0.94	0.94	0.94	0.94	0.94
Percent Heavy Veh, %	2	2	2	2	2	2
Cap, veh/h	186	165	1734	757	366	2665
Arrive On Green	0.10	0.10	0.49	0.49	0.21	0.75
Sat Flow, veh/h	1781	1585	3647	1552	1781	3647
Grp Volume(v), veh/h	10	74	959	15	324	1972
Grp Sat Flow(s),veh/h/ln	1781	1585	1777	1552	1781	1777
Q Serve(g_s), s	0.4	3.6	15.4	0.4	14.4	25.4
Cycle Q Clear(g_c), s	0.4	3.6	15.4	0.4	14.4	25.4
Prop In Lane	1.00	1.00		1.00	1.00	
Lane Grp Cap(c), veh/h	186	165	1734	757	366	2665
V/C Ratio(X)	0.05	0.45	0.55	0.02	0.88	0.74
Avail Cap(c_a), veh/h	646	575	1763	770	729	3417
HCM Platoon Ratio	1.00	1.00	1.00	1.00	1.00	1.00
Upstream Filter(I)	1.00	1.00	1.00	1.00	1.00	1.00
Uniform Delay (d), s/veh	32.9	34.4	14.7	10.8	31.5	5.7
Incr Delay (d2), s/veh	0.1	1.9	0.5	0.0	2.9	0.8
Initial Q Delay(d3), s/veh	0.0	0.0	0.0	0.0	0.0	0.0
%ile BackOfQ(50%),veh/ln	0.2	1.4	5.1	0.1	5.8	4.0
Unsig. Movement Delay, s/veh						
LnGrp Delay(d), s/veh	33.1	36.2	15.1	10.8	34.3	6.5
LnGrp LOS	C	D	B	B	C	A
Approach Vol, veh/h	84		974			2296
Approach Delay, s/veh	35.9		15.1			10.5
Approach LOS	D		B			B

Timer - Assigned Phs	1	2				6	8
Phs Duration (G+Y+Rc), s	21.4	46.3				67.7	13.9
Change Period (Y+Rc), s	4.6	6.5				6.5	5.4
Max Green Setting (Gmax), s	33.4	40.5				78.5	29.6
Max Q Clear Time (g_c+I1), s	16.4	17.4				27.4	5.6
Green Ext Time (p_c), s	0.4	8.7				33.8	0.2

Intersection Summary	
HCM 7th Control Delay, s/veh	12.4
HCM 7th LOS	B

Intersection	
Intersection Delay, s/veh	232.8
Intersection LOS	F

Movement	WBL	WBR	NBT	NBR	SBL	SBT
Lane Configurations						
Traffic Vol, veh/h	96	447	249	120	873	534
Future Vol, veh/h	96	447	249	120	873	534
Peak Hour Factor	0.93	0.93	0.93	0.93	0.93	0.93
Heavy Vehicles, %	2	2	2	2	2	2
Mvmt Flow	103	481	268	129	939	574
Number of Lanes	1	0	2	0	1	1

Approach	WB	NB	SB
Opposing Approach		SB	NB
Opposing Lanes	0	2	2
Conflicting Approach Left	NB		WB
Conflicting Lanes Left	2	0	1
Conflicting Approach Right	SB	WB	
Conflicting Lanes Right	2	1	0
HCM Control Delay, s/veh	56.9	16.1	357.5
HCM LOS	F	C	F

Lane	NBLn1	NBLn2	WBLn1	SBLn1	SBLn2
Vol Left, %	0%	0%	18%	100%	0%
Vol Thru, %	100%	41%	0%	0%	100%
Vol Right, %	0%	59%	82%	0%	0%
Sign Control	Stop	Stop	Stop	Stop	Stop
Traffic Vol by Lane	166	203	543	873	534
LT Vol	0	0	96	873	0
Through Vol	166	83	0	0	534
RT Vol	0	120	447	0	0
Lane Flow Rate	178	218	584	939	574
Geometry Grp	5	5	2	5	5
Degree of Util (X)	0.388	0.449	0.984	2.056	1.175
Departure Headway (Hd)	8.056	7.627	5.961	7.884	7.368
Convergence, Y/N	Yes	Yes	Yes	Yes	Yes
Cap	450	476	613	469	494
Service Time	5.756	5.327	3.961	5.595	5.079
HCM Lane V/C Ratio	0.396	0.458	0.953	2.002	1.162
HCM Control Delay, s/veh	15.8	16.4	56.9	500.7	123.3
HCM Lane LOS	C	C	F	F	F
HCM 95th-tile Q	1.8	2.3	14.3	65.6	20.9

Intersection	
Intersection Delay, s/veh	174.2
Intersection LOS	F

Movement	EBL	EBT	WBT	WBR	SBL	SBR
Lane Configurations						
Traffic Vol, veh/h	68	927	440	52	71	118
Future Vol, veh/h	68	927	440	52	71	118
Peak Hour Factor	0.94	0.94	0.94	0.94	0.94	0.94
Heavy Vehicles, %	2	2	2	2	2	2
Mvmt Flow	72	986	468	55	76	126
Number of Lanes	1	1	2	0	1	0

Approach	EB	WB	SB
Opposing Approach	WB	EB	
Opposing Lanes	2	2	0
Conflicting Approach Left	SB		WB
Conflicting Lanes Left	1	0	2
Conflicting Approach Right		SB	EB
Conflicting Lanes Right	0	1	2
HCM Control Delay, s/veh	303.5	14.7	14.1
HCM LOS	F	B	B

Lane	EBLn1	EBLn2	WBLn1	WBLn2	SBLn1
Vol Left, %	100%	0%	0%	0%	38%
Vol Thru, %	0%	100%	100%	74%	0%
Vol Right, %	0%	0%	0%	26%	62%
Sign Control	Stop	Stop	Stop	Stop	Stop
Traffic Vol by Lane	68	927	293	199	189
LT Vol	68	0	0	0	71
Through Vol	0	927	293	147	0
RT Vol	0	0	0	52	118
Lane Flow Rate	72	986	312	211	201
Geometry Grp	5	5	5	5	2
Degree of Util (X)	0.129	1.623	0.519	0.341	0.351
Departure Headway (Hd)	6.431	5.924	6.628	6.441	7.24
Convergence, Y/N	Yes	Yes	Yes	Yes	Yes
Cap	561	621	549	562	501
Service Time	4.131	3.624	4.328	4.141	5.24
HCM Lane V/C Ratio	0.128	1.588	0.568	0.375	0.401
HCM Control Delay, s/veh	10.1	303.6	16.3	12.4	14.1
HCM Lane LOS	B	F	C	B	B
HCM 95th-tile Q	0.4	54.2	3	1.5	1.6

Intersection	
Int Delay, s/veh	3.2

Movement	EBL	EBT	WBT	WBR	SBL	SBR
Lane Configurations						
Traffic Vol, veh/h	241	757	350	36	21	143
Future Vol, veh/h	241	757	350	36	21	143
Conflicting Peds, #/hr	0	0	0	0	0	0
Sign Control	Free	Free	Free	Free	Stop	Stop
RT Channelized	-	None	-	None	-	None
Storage Length	100	-	-	-	0	-
Veh in Median Storage, #	-	0	0	-	1	-
Grade, %	-	0	0	-	0	-
Peak Hour Factor	92	92	92	92	92	92
Heavy Vehicles, %	2	2	2	2	2	2
Mvmt Flow	262	823	380	39	23	155

Major/Minor	Major1		Major2		Minor2	
Conflicting Flow All	420	0	-	0	1747	400
Stage 1	-	-	-	-	400	-
Stage 2	-	-	-	-	1347	-
Critical Hdwy	4.12	-	-	-	6.42	6.22
Critical Hdwy Stg 1	-	-	-	-	5.42	-
Critical Hdwy Stg 2	-	-	-	-	5.42	-
Follow-up Hdwy	2.218	-	-	-	3.518	3.318
Pot Cap-1 Maneuver	1140	-	-	-	95	650
Stage 1	-	-	-	-	677	-
Stage 2	-	-	-	-	242	-
Platoon blocked, %			-	-	-	
Mov Cap-1 Maneuver	1140	-	-	-	73	650
Mov Cap-2 Maneuver	-	-	-	-	179	-
Stage 1	-	-	-	-	521	-
Stage 2	-	-	-	-	242	-

Approach	EB	WB	SB
HCM Control Delay, s/v	2.2	0	16.64
HCM LOS			C

Minor Lane/Major Mvmt	EBL	EBT	WBT	WBR	SBLn1
Capacity (veh/h)	1140	-	-	-	486
HCM Lane V/C Ratio	0.23	-	-	-	0.367
HCM Control Delay (s/veh)	9.1	-	-	-	16.6
HCM Lane LOS	A	-	-	-	C
HCM 95th %tile Q(veh)	0.9	-	-	-	1.7

APPENDIX 5.3: EAP (2030) (PROJECT ONLY) CONDITIONS TRAFFIC SIGNAL WARRANT ANALYSIS WORKSHEETS

This Page Intentionally Left Blank

Figure 4C-103 (CA). Traffic Signal Warrants Worksheet
(Average Traffic Estimate Form)

DIST	CO	RTE	PM

TRAFFIC CONDITIONS **2030 Project Only**

CALC JB DATE 06/25/24

CHK JB DATE 06/25/24

Jurisdiction: **County of Riverside**

Major Street: **El Sobrante Rd.**

Minor Street: **Street A**

Critical Approach Speed (Major) 45 mph

Critical Approach Speed (Minor) 25 mph

Major Street Approach Lanes = **1** lane

Minor Street Approach Lanes **1** lane

Major Street Future ADT = **13,743** vpd

Minor Street Future ADT = **604** vpd

Speed limit or critical speed on major street traffic > 64 km/h (40 mph); ..... √

or

In built up area of isolated community of < 10,000 population .....

RURAL (R)

(Based on Estimated Average Daily Traffic - See Note)

URBAN / RURAL: XX

CONDITION A - Minimum Vehicular Volume

Satisfied / Not Satisfied: XX

Number of lanes for moving traffic on each approach		Minimum Requirements EADT			
Major Street	Minor Street	Vehicles Per Day on Major Street (Total of Both Approaches)		Vehicles Per Day on Higher-Volume Minor Street Approach (One Direction Only)	
		Urban	Rural	Urban	Rural
1 **13,743**	*1* **604**	8,000	5,600 *	2,400	1,680
2 +	*1*	9,600	6,720	2,400	1,680
2 +	*2* +	9,600	6,720	3,200	2,240
1	*2* +	8,000	5,600	3,200	2,240

CONDITION B - Interruption of Continuous Traffic

Satisfied / Not Satisfied: XX

Number of lanes for moving traffic on each approach		Vehicles Per Day on Major Street (Total of Both Approaches)		Vehicles Per Day on Higher-Volume Minor Street Approach (One Direction Only)	
Major Street	Minor Street	Urban	Rural	Urban	Rural
1 **13,743**	*1* **604**	12,000	8,400 *	1,200	850
2 +	*1*	14,400	10,080	1,200	850
2 +	*2* +	14,400	10,080	1,600	1,120
1	*2* +	12,000	8,400	1,600	1,120

Combination of CONDITIONS A + B

Satisfied / Not Satisfied: XX

No one condition satisfied, but following conditions fulfilled 80% of more .....

A	B
36%	71%

2 CONDITIONS 80%

2 CONDITIONS 80%

Note: To be used only for NEW INTERSECTIONS or other locations where it is not reasonable to count actual traffic volumes.

The satisfaction of a traffic signal warrant or warrants shall not in itself require the installation of a traffic control signal.

This Page Intentionally Left Blank

APPENDIX 5.4: EAP (2030) (PROJECT PLUS HIGHLAND GROVE IV PLUS GREENTREE) CONDITIONS TRAFFIC SIGNAL WARRANT ANALYSIS WORKSHEETS

This Page Intentionally Left Blank

Figure 4C-103 (CA). Traffic Signal Warrants Worksheet
(Average Traffic Estimate Form)

DIST	CO	RTE	PM	TRAFFIC CONDITIONS	2030 P+HG4+GT
				CALC JB	DATE 06/25/24
				CHK JB	DATE 06/25/24

Jurisdiction: **County of Riverside**
Major Street: **El Sobrante Rd.**
Minor Street: **Street A**
Critical Approach Speed (Major) 45 mph
Critical Approach Speed (Minor) 25 mph

Major Street Approach Lanes = **1** lane
Minor Street Approach Lanes **1** lane

Major Street Future ADT = **15,339** vpd
Minor Street Future ADT = **2,200** vpd

Speed limit or critical speed on major street traffic > 64 km/h (40 mph); ..... √
or
In built up area of isolated community of < 10,000 population .....

RURAL (R)

(Based on Estimated Average Daily Traffic - See Note)

URBAN / RURAL	Minimum Requirements EADT: Vehicles Per Day on Major Street (Total of Both Approaches)		Minimum Requirements EADT: Vehicles Per Day on Higher-Volume Minor Street Approach (One Direction Only)	
CONDITION A - Minimum Vehicular Volume				
Satisfied: XX (RURAL)				
Number of lanes for moving traffic on each approach				
Major Street / Minor Street	Urban	Rural	Urban	Rural
1 **15,339** / 1 **2,200**	8,000	5,600 *	2,400	1,680 *
2 + / 1	9,600	6,720	2,400	1,680
2 + / 2 +	9,600	6,720	3,200	2,240
1 / 2 +	8,000	5,600	3,200	2,240
CONDITION B - Interruption of Continuous Traffic				
Satisfied: XX (RURAL)				
Number of lanes for moving traffic on each approach				
Major Street / Minor Street	Urban	Rural	Urban	Rural
1 **15,339** / 1 **2,200**	12,000	8,400 *	1,200	850 *
2 + / 1	14,400	10,080	1,200	850
2 + / 2 +	14,400	10,080	1,600	1,120
1 / 2 +	12,000	8,400	1,600	1,120
Combination of CONDITIONS A + B				
Satisfied: XX (RURAL)	2 CONDITIONS 80%		2 CONDITIONS 80%	
No one condition satisfied, but following conditions fulfilled 80% of more ..... A: 100% B: 100%				

Note: To be used only for NEW INTERSECTIONS or other locations where it is not reasonable to count actual traffic volumes.

The satisfaction of a traffic signal warrant or warrants shall not in itself require the installation of a traffic control signal.

This Page Intentionally Left Blank

APPENDIX 5.5: EAP (2030) (PROJECT ONLY) CONDITIONS QUEUING ANALYSIS WORKSHEETS

This Page Intentionally Left Blank



Lane Group	WBL	WBT	WBR	NBL	NBT	SBT	SBR
Lane Group Flow (vph)	291	283	284	720	1521	1076	155
v/c Ratio	0.74	0.71	0.69	0.86	0.45	0.57	0.24
Control Delay (s/veh)	46.5	35.0	34.0	43.2	16.9	27.9	8.2
Queue Delay	0.0	0.0	0.0	0.0	0.5	0.0	0.0
Total Delay (s/veh)	46.5	35.0	34.0	43.2	17.4	27.9	8.2
Queue Length 50th (ft)	180	136	130	252	229	201	11
Queue Length 95th (ft)	249	213	202	305	379	284	61
Internal Link Dist (ft)		1180			412	935	
Turn Bay Length (ft)	500		500	155			140
Base Capacity (vph)	532	519	534	902	3355	1898	648
Starvation Cap Reductn	0	0	0	0	1244	0	0
Spillback Cap Reductn	0	0	0	0	0	0	0
Storage Cap Reductn	0	0	0	0	0	0	0
Reduced v/c Ratio	0.55	0.55	0.53	0.80	0.72	0.57	0.24

Intersection Summary



Lane Group	EBL	EBT	EBR	NBT	NBR	SBL	SBT
Lane Group Flow (vph)	332	320	301	1727	544	354	1056
v/c Ratio	0.78	0.76	0.70	0.74	0.54	0.75	0.33
Control Delay (s/veh)	46.9	39.1	31.2	25.9	4.1	56.2	2.6
Queue Delay	0.0	0.0	0.0	0.0	0.0	0.0	0.0
Total Delay (s/veh)	46.9	39.1	31.2	25.9	4.1	56.2	2.6
Queue Length 50th (ft)	205	168	126	333	0	74	12
Queue Length 95th (ft)	287	257	208	431	65	139	39
Internal Link Dist (ft)		1416		886			412
Turn Bay Length (ft)			450		415	155	
Base Capacity (vph)	543	520	525	2326	1005	495	3238
Starvation Cap Reductn	0	0	0	0	0	0	0
Spillback Cap Reductn	0	0	0	0	0	0	0
Storage Cap Reductn	0	0	0	0	0	0	0
Reduced v/c Ratio	0.61	0.62	0.57	0.74	0.54	0.72	0.33

Intersection Summary

Lane Group	EBL	EBT	EBR	WBL	WBT	WBR	NBL	NBT	NBR	SBL	SBT	SBR
Lane Group Flow (vph)	538	247	173	116	259	311	410	1727	187	153	1118	541
v/c Ratio	0.88	0.25	0.30	0.49	0.42	0.72	0.87	0.88	0.27	0.78	0.72	0.68
Control Delay (s/veh)	58.4	27.5	5.1	54.6	37.8	24.0	63.8	36.5	6.1	74.8	35.6	10.4
Queue Delay	0.0	0.0	0.0	0.0	0.0	0.0	0.0	0.0	0.0	0.0	0.0	0.0
Total Delay (s/veh)	58.4	27.5	5.1	54.6	37.8	24.0	63.8	36.5	6.1	74.8	35.6	10.4
Queue Length 50th (ft)	165	63	0	35	77	68	127	347	6	48	219	30
Queue Length 95th (ft)	#347	93	44	77	112	156	#281	#638	61	#129	363	175
Internal Link Dist (ft)		2549			2428			2703			886	
Turn Bay Length (ft)	205		205	205		130	200		305	355		535
Base Capacity (vph)	611	1719	848	255	1352	715	469	1954	705	196	1549	799
Starvation Cap Reductn	0	0	0	0	0	0	0	0	0	0	0	0
Spillback Cap Reductn	0	0	0	0	0	0	0	0	0	0	0	0
Storage Cap Reductn	0	0	0	0	0	0	0	0	0	0	0	0
Reduced v/c Ratio	0.88	0.14	0.20	0.45	0.19	0.43	0.87	0.88	0.27	0.78	0.72	0.68

Intersection Summary

95th percentile volume exceeds capacity, queue may be longer.
Queue shown is maximum after two cycles.

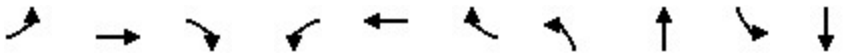

Lane Group	EBL	EBT	EBR	WBL	WBT	WBR	NBL	NBT	SBL	SBT
Lane Group Flow (vph)	58	98	71	84	118	255	52	1565	134	703
v/c Ratio	0.34	0.39	0.23	0.69	0.38	0.63	0.43	0.89	0.78	0.36
Control Delay (s/veh)	56.0	45.4	3.9	77.9	43.3	21.5	59.9	31.5	77.3	15.3
Queue Delay	0.0	0.0	0.0	0.0	0.0	0.0	0.0	0.0	0.0	0.0
Total Delay (s/veh)	56.0	45.4	3.9	77.9	43.3	21.5	59.9	31.5	77.3	15.3
Queue Length 50th (ft)	19	61	0	54	73	50	33	437	86	125
Queue Length 95th (ft)	45	107	13	#152	124	127	81	#794	#218	237
Internal Link Dist (ft)		810			1637			2644		1335
Turn Bay Length (ft)	130			205		200	215		210	
Base Capacity (vph)	173	518	513	125	543	576	148	1763	176	1952
Starvation Cap Reductn	0	0	0	0	0	0	0	0	0	0
Spillback Cap Reductn	0	0	0	0	0	0	0	0	0	0
Storage Cap Reductn	0	0	0	0	0	0	0	0	0	0
Reduced v/c Ratio	0.34	0.19	0.14	0.67	0.22	0.44	0.35	0.89	0.76	0.36

Intersection Summary

95th percentile volume exceeds capacity, queue may be longer.
Queue shown is maximum after two cycles.



Lane Group	WBL	WBR	NBT	NBR	SBL	SBT
Lane Group Flow (vph)	22	289	1427	28	100	656
v/c Ratio	0.08	0.62	0.75	0.03	0.48	0.27
Control Delay (s/veh)	34.9	14.5	19.3	7.1	47.6	5.6
Queue Delay	0.0	0.0	0.0	0.0	0.0	0.0
Total Delay (s/veh)	34.9	14.5	19.3	7.1	47.6	5.6
Queue Length 50th (ft)	10	20	263	2	48	46
Queue Length 95th (ft)	35	102	560	19	125	126
Internal Link Dist (ft)	3339		1159			2644
Turn Bay Length (ft)	150			200	300	
Base Capacity (vph)	704	777	2567	1153	354	3152
Starvation Cap Reductn	0	0	0	0	0	0
Spillback Cap Reductn	0	0	0	0	0	0
Storage Cap Reductn	0	0	0	0	0	0
Reduced v/c Ratio	0.03	0.37	0.56	0.02	0.28	0.21

Intersection Summary

Intersection: 1: La Sierra Av. & SR-91 WB Ramps

Movement	WB	WB	WB	NB	NB	NB	NB	NB	SB	SB	SB	SB
Directions Served	L	LTR	R	L	L	T	T	T	T	T	T	R
Maximum Queue (ft)	258	323	297	244	351	286	280	271	537	467	239	166
Average Queue (ft)	119	225	173	226	255	195	197	200	335	249	127	52
95th Queue (ft)	239	300	266	288	332	269	269	273	475	411	215	126
Link Distance (ft)		1183			444	444	444	444	949	949	949	
Upstream Blk Time (%)					0							
Queuing Penalty (veh)					0							
Storage Bay Dist (ft)	500		500	155								140
Storage Blk Time (%)				12	24						7	0
Queuing Penalty (veh)				42	84						10	0

Intersection: 2: La Sierra Av. & SR-91 EB Ramps

Movement	EB	EB	EB	NB	NB	NB	NB	SB	SB	SB	SB	SB
Directions Served	L	LTR	R	T	T	T	R	L	L	T	T	T
Maximum Queue (ft)	441	542	488	696	673	664	402	187	196	141	144	182
Average Queue (ft)	99	369	296	491	420	389	190	106	131	25	39	67
95th Queue (ft)	335	514	461	816	788	745	456	169	182	84	97	137
Link Distance (ft)	1430	1430		848	848	848				444	444	444
Upstream Blk Time (%)				0	0	1						
Queuing Penalty (veh)				3	3	4						
Storage Bay Dist (ft)			450				415	155	155			
Storage Blk Time (%)		5	0			9	0	3	14	0		
Queuing Penalty (veh)		11	0			49	0	8	46	1		

Intersection: 3: La Sierra Av. & Indiana Av./S. Indiana Av.

Movement	EB	EB	EB	EB	EB	WB	WB	WB	WB	WB	NB	NB
Directions Served	L	L	T	T	R	L	L	T	T	R	L	L
Maximum Queue (ft)	234	265	840	696	96	83	104	131	199	182	198	275
Average Queue (ft)	186	217	312	193	38	25	49	67	66	109	125	194
95th Queue (ft)	278	299	1095	866	76	59	89	111	151	179	189	321
Link Distance (ft)			2554	2554				2432	2432			
Upstream Blk Time (%)												
Queuing Penalty (veh)												
Storage Bay Dist (ft)	205	205			205	205	205			130	200	200
Storage Blk Time (%)	8	27	2	0					1	7	1	2
Queuing Penalty (veh)	9	30	9	0					1	8	4	9

Intersection: 3: La Sierra Av. & Indiana Av./S. Indiana Av.

Movement	NB	NB	NB	NB	SB	SB	SB	SB	SB	SB		
Directions Served	T	T	T	R	L	L	T	T	T	R		
Maximum Queue (ft)	636	620	650	357	94	119	258	259	269	275		
Average Queue (ft)	354	347	374	104	40	62	145	158	150	120		
95th Queue (ft)	771	738	773	353	84	104	232	247	241	225		
Link Distance (ft)	2691	2691	2691				848	848	848			
Upstream Blk Time (%)												
Queuing Penalty (veh)												
Storage Bay Dist (ft)				305	355	355				535		
Storage Blk Time (%)	25		20									
Queuing Penalty (veh)	95		34									

Intersection: 4: La Sierra Av. & Victoria Av.

Movement	EB	EB	EB	EB	WB	WB	WB	NB	NB	NB	SB	SB
Directions Served	L	L	T	R	L	T	R	L	T	TR	L	T
Maximum Queue (ft)	39	83	163	66	150	149	177	274	520	542	184	227
Average Queue (ft)	10	34	61	28	61	64	81	63	262	296	86	81
95th Queue (ft)	34	72	121	56	116	120	142	194	455	483	153	183
Link Distance (ft)			843	843		1670			2640	2640		1333
Upstream Blk Time (%)												
Queuing Penalty (veh)												
Storage Bay Dist (ft)	130	130			205		200	215			210	
Storage Blk Time (%)			1		0		0	0	15		1	0
Queuing Penalty (veh)			1		0		0	0	7		2	0

Intersection: 4: La Sierra Av. & Victoria Av.

Movement	SB	B20	B20
Directions Served	TR	T	T
Maximum Queue (ft)	260	15	48
Average Queue (ft)	98	0	4
95th Queue (ft)	206	6	25
Link Distance (ft)	1333	2691	2691
Upstream Blk Time (%)			
Queuing Penalty (veh)			
Storage Bay Dist (ft)			
Storage Blk Time (%)			
Queuing Penalty (veh)			

Intersection: 5: La Sierra Av. & McAllister Pkwy.

Movement	WB	WB	NB	NB	NB	SB	SB	SB
Directions Served	L	R	T	T	R	L	T	T
Maximum Queue (ft)	42	193	290	262	48	150	106	133
Average Queue (ft)	11	86	150	130	7	63	28	50
95th Queue (ft)	33	152	254	237	29	123	78	108
Link Distance (ft)		3360	1207	1207			2640	2640
Upstream Blk Time (%)								
Queuing Penalty (veh)								
Storage Bay Dist (ft)	150				200	300		
Storage Blk Time (%)		1		2				
Queuing Penalty (veh)		0		0				

Network Summary

Network wide Queuing Penalty: 471



Lane Group	WBL	WBT	WBR	NBL	NBT	SBT	SBR
Lane Group Flow (vph)	402	380	370	439	1047	1581	310
v/c Ratio	0.82	0.75	0.73	0.83	0.34	0.76	0.41
Control Delay (s/veh)	46.6	33.4	32.0	39.7	24.2	29.6	10.4
Queue Delay	0.0	0.0	0.0	0.0	0.0	0.0	0.0
Total Delay (s/veh)	46.6	33.4	32.0	39.7	24.2	29.6	10.4
Queue Length 50th (ft)	244	181	166	153	242	330	48
Queue Length 95th (ft)	349	289	266	m#198	282	404	123
Internal Link Dist (ft)		1180			412	935	
Turn Bay Length (ft)	500		500	155			140
Base Capacity (vph)	571	577	579	554	3094	2088	760
Starvation Cap Reductn	0	0	0	0	0	0	0
Spillback Cap Reductn	0	0	0	0	0	0	0
Storage Cap Reductn	0	0	0	0	0	0	0
Reduced v/c Ratio	0.70	0.66	0.64	0.79	0.34	0.76	0.41

Intersection Summary

95th percentile volume exceeds capacity, queue may be longer.
Queue shown is maximum after two cycles.
m Volume for 95th percentile queue is metered by upstream signal.



Lane Group	EBL	EBT	EBR	NBT	NBR	SBL	SBT
Lane Group Flow (vph)	207	478	482	1228	339	465	1643
v/c Ratio	0.33	0.87	0.79	0.77	0.47	0.85	0.62
Control Delay (s/veh)	22.4	44.8	33.0	35.9	5.6	34.9	11.9
Queue Delay	0.0	0.0	0.0	0.0	0.0	0.0	0.4
Total Delay (s/veh)	22.4	44.8	33.0	35.9	5.6	34.9	12.3
Queue Length 50th (ft)	92	287	234	273	0	67	239
Queue Length 95th (ft)	144	#425	354	#338	66	#228	360
Internal Link Dist (ft)		1416		886			412
Turn Bay Length (ft)			450		415	155	
Base Capacity (vph)	722	624	681	1605	727	551	2650
Starvation Cap Reductn	0	0	0	0	0	0	454
Spillback Cap Reductn	0	0	0	0	0	0	0
Storage Cap Reductn	0	0	0	0	0	0	0
Reduced v/c Ratio	0.29	0.77	0.71	0.77	0.47	0.84	0.75

Intersection Summary

95th percentile volume exceeds capacity, queue may be longer.
Queue shown is maximum after two cycles.

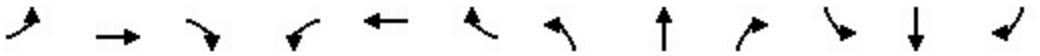

Lane Group	EBL	EBT	EBR	WBL	WBT	WBR	NBL	NBT	NBR	SBL	SBT	SBR
Lane Group Flow (vph)	452	420	453	191	232	298	265	997	137	346	1803	457
v/c Ratio	0.96	0.45	0.83	0.62	0.30	0.63	0.93	0.58	0.22	0.89	0.96	0.54
Control Delay (s/veh)	78.9	33.4	34.7	57.3	34.5	19.9	88.0	31.7	6.1	73.6	47.8	5.3
Queue Delay	0.0	0.0	0.0	0.0	0.0	0.0	0.0	0.0	0.0	0.0	0.0	0.0
Total Delay (s/veh)	78.9	33.4	34.7	57.3	34.5	19.9	88.0	31.7	6.1	73.6	47.8	5.3
Queue Length 50th (ft)	157	125	177	64	68	68	92	200	0	120	428	0
Queue Length 95th (ft)	#310	170	306	114	101	154	#204	298	47	#244	#679	78
Internal Link Dist (ft)		2549			2428			2703			886	
Turn Bay Length (ft)	205		205	205		130	200		305	355		535
Base Capacity (vph)	472	1408	728	354	1286	681	285	1722	617	387	1873	853
Starvation Cap Reductn	0	0	0	0	0	0	0	0	0	0	0	0
Spillback Cap Reductn	0	0	0	0	0	0	0	0	0	0	0	0
Storage Cap Reductn	0	0	0	0	0	0	0	0	0	0	0	0
Reduced v/c Ratio	0.96	0.30	0.62	0.54	0.18	0.44	0.93	0.58	0.22	0.89	0.96	0.54

Intersection Summary

95th percentile volume exceeds capacity, queue may be longer.
Queue shown is maximum after two cycles.

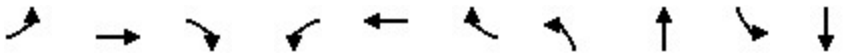

Lane Group	EBL	EBT	EBR	WBL	WBT	WBR	NBL	NBT	SBL	SBT
Lane Group Flow (vph)	69	124	177	317	89	206	32	1022	227	1775
v/c Ratio	0.37	0.47	0.46	1.13	0.18	0.37	0.38	0.83	0.84	1.02
Control Delay (s/veh)	56.0	47.0	8.3	133.7	32.4	6.2	64.1	38.1	70.5	53.4
Queue Delay	0.0	0.0	0.0	0.0	0.0	0.0	0.0	0.0	0.0	0.0
Total Delay (s/veh)	56.0	47.0	8.3	133.7	32.4	6.2	64.1	38.1	70.5	53.4
Queue Length 50th (ft)	23	78	0	~243	49	0	21	303	147	~673
Queue Length 95th (ft)	52	134	46	#497	89	53	#60	#516	#339	#1034
Internal Link Dist (ft)		810			1637			2644		1335
Turn Bay Length (ft)	130			205		200	215		210	
Base Capacity (vph)	193	525	578	281	703	718	85	1312	271	1747
Starvation Cap Reductn	0	0	0	0	0	0	0	0	0	0
Spillback Cap Reductn	0	0	0	0	0	0	0	0	0	0
Storage Cap Reductn	0	0	0	0	0	0	0	0	0	0
Reduced v/c Ratio	0.36	0.24	0.31	1.13	0.13	0.29	0.38	0.78	0.84	1.02

Intersection Summary

~ Volume exceeds capacity, queue is theoretically infinite.
Queue shown is maximum after two cycles.

95th percentile volume exceeds capacity, queue may be longer.
Queue shown is maximum after two cycles.



Lane Group	WBL	WBR	NBT	NBR	SBL	SBT
Lane Group Flow (vph)	10	180	874	15	324	1831
v/c Ratio	0.03	0.44	0.69	0.03	0.70	0.76
Control Delay (s/veh)	33.3	9.4	26.7	12.1	37.1	11.4
Queue Delay	0.0	0.0	0.0	0.0	0.0	0.0
Total Delay (s/veh)	33.3	9.4	26.7	12.1	37.1	11.4
Queue Length 50th (ft)	4	0	175	1	131	220
Queue Length 95th (ft)	21	57	381	16	320	568
Internal Link Dist (ft)	3339		1159			2644
Turn Bay Length (ft)	150			200	300	
Base Capacity (vph)	689	726	1886	832	778	3264
Starvation Cap Reductn	0	0	0	0	0	0
Spillback Cap Reductn	0	0	0	0	0	0
Storage Cap Reductn	0	0	0	0	0	0
Reduced v/c Ratio	0.01	0.25	0.46	0.02	0.42	0.56

Intersection Summary

Intersection: 1: La Sierra Av. & SR-91 WB Ramps

Movement	WB	WB	WB	NB	NB	NB	NB	NB	SB	SB	SB	SB
Directions Served	L	LTR	R	L	L	T	T	T	T	T	T	R
Maximum Queue (ft)	338	385	345	212	256	241	233	247	931	883	618	190
Average Queue (ft)	174	265	202	134	163	173	173	174	736	652	332	119
95th Queue (ft)	295	356	315	196	228	233	234	238	1067	987	693	233
Link Distance (ft)		1183			444	444	444	444	949	949	949	
Upstream Blk Time (%)									14	1	1	
Queuing Penalty (veh)									0	0	0	
Storage Bay Dist (ft)	500		500	155								140
Storage Blk Time (%)				2	8						26	0
Queuing Penalty (veh)				4	18						78	1

Intersection: 2: La Sierra Av. & SR-91 EB Ramps

Movement	EB	EB	EB	NB	NB	NB	NB	SB	SB	SB	SB	SB
Directions Served	L	LTR	R	T	T	T	R	L	L	T	T	T
Maximum Queue (ft)	307	504	441	443	409	400	162	184	226	371	354	395
Average Queue (ft)	32	317	270	262	232	230	74	104	141	133	135	157
95th Queue (ft)	183	488	454	420	378	358	126	164	203	319	310	326
Link Distance (ft)	1430	1430		848	848	848				444	444	444
Upstream Blk Time (%)										0	0	0
Queuing Penalty (veh)										2	1	1
Storage Bay Dist (ft)			450				415	155	155			
Storage Blk Time (%)		3	1			0		0	7	7		
Queuing Penalty (veh)		13	4			1		1	35	30		

Intersection: 3: La Sierra Av. & Indiana Av./S. Indiana Av.

Movement	EB	EB	EB	EB	EB	WB	WB	WB	WB	WB	NB	NB
Directions Served	L	L	T	T	R	L	L	T	T	R	L	L
Maximum Queue (ft)	235	265	696	644	268	130	146	130	188	183	191	245
Average Queue (ft)	214	247	424	322	155	54	77	62	57	80	96	114
95th Queue (ft)	278	308	763	681	247	105	125	110	125	148	171	201
Link Distance (ft)			2554	2554				2432	2432			
Upstream Blk Time (%)												
Queuing Penalty (veh)												
Storage Bay Dist (ft)	205	205			205	205	205			130	200	200
Storage Blk Time (%)	21	59	3	1	3			0	0	3	0	1
Queuing Penalty (veh)	40	114	13	2	6			0	0	3	0	3

Intersection: 3: La Sierra Av. & Indiana Av./S. Indiana Av.

Movement	NB	NB	NB	NB	SB	SB	SB	SB	SB	SB
Directions Served	T	T	T	R	L	L	T	T	T	R
Maximum Queue (ft)	292	258	297	113	266	445	838	830	843	660
Average Queue (ft)	142	150	171	37	126	315	563	576	593	348
95th Queue (ft)	241	236	274	84	204	569	913	917	945	814
Link Distance (ft)	2691	2691	2691				848	848	848	
Upstream Blk Time (%)							2	2	4	
Queuing Penalty (veh)							14	13	33	
Storage Bay Dist (ft)				305	355	355				535
Storage Blk Time (%)	3		0		0	0	39		25	4
Queuing Penalty (veh)	6		0		0	0	125		107	21

Intersection: 4: La Sierra Av. & Victoria Av.

Movement	EB	EB	EB	EB	WB	WB	WB	NB	NB	NB	SB	SB
Directions Served	L	L	T	R	L	T	R	L	T	TR	L	T
Maximum Queue (ft)	39	98	172	174	305	1103	290	153	343	368	275	1134
Average Queue (ft)	11	42	85	82	261	590	179	27	181	213	224	707
95th Queue (ft)	35	81	151	144	365	1456	402	84	307	344	342	1327
Link Distance (ft)			843	843		1670			2640	2640		1333
Upstream Blk Time (%)						3						8
Queuing Penalty (veh)						0						86
Storage Bay Dist (ft)	130	130			205		200	215			210	
Storage Blk Time (%)		0	3		58	0			6		6	41
Queuing Penalty (veh)		0	2		160	1			2		50	87

Intersection: 4: La Sierra Av. & Victoria Av.

Movement	SB	B20	B20	B20
Directions Served	TR	T	T	
Maximum Queue (ft)	1152	2151	1851	328
Average Queue (ft)	710	212	236	33
95th Queue (ft)	1331	1152	1187	271
Link Distance (ft)	1333	2691	2691	2691
Upstream Blk Time (%)	8	0	0	
Queuing Penalty (veh)	91	0	0	
Storage Bay Dist (ft)				
Storage Blk Time (%)				
Queuing Penalty (veh)				

Intersection: 5: La Sierra Av. & McAllister Pkwy.

Movement	WB	WB	NB	NB	NB	SB	SB	SB
Directions Served	L	R	T	T	R	L	T	T
Maximum Queue (ft)	42	107	208	212	28	280	256	264
Average Queue (ft)	7	44	113	90	5	148	66	89
95th Queue (ft)	28	81	187	173	23	246	184	209
Link Distance (ft)		3360	1207	1207			2640	2640
Upstream Blk Time (%)								
Queuing Penalty (veh)								
Storage Bay Dist (ft)	150				200	300		
Storage Blk Time (%)		0		0		0	0	
Queuing Penalty (veh)		0		0		1	0	

Network Summary

Network wide Queuing Penalty: 1171

APPENDIX 5.6: EAP (2030) (PROJECT PLUS HIGHLAND GROVE IV PLUS GREENTREE) CONDITIONS QUEUING ANALYSIS WORKSHEETS

This Page Intentionally Left Blank



Lane Group	WBL	WBT	WBR	NBL	NBT	SBT	SBR
Lane Group Flow (vph)	301	284	284	749	1544	1085	155
v/c Ratio	0.75	0.70	0.68	0.87	0.46	0.59	0.25
Control Delay (s/veh)	46.8	34.3	33.1	43.4	17.6	29.1	8.5
Queue Delay	0.0	0.0	0.0	0.0	0.6	0.0	0.0
Total Delay (s/veh)	46.8	34.3	33.1	43.4	18.1	29.1	8.5
Queue Length 50th (ft)	186	136	129	262	251	209	11
Queue Length 95th (ft)	258	213	202	317	387	287	61
Internal Link Dist (ft)		1180			412	935	
Turn Bay Length (ft)	500		500	155			140
Base Capacity (vph)	532	519	534	911	3331	1836	631
Starvation Cap Reductn	0	0	0	0	1231	0	0
Spillback Cap Reductn	0	0	0	0	0	0	0
Storage Cap Reductn	0	0	0	0	0	0	0
Reduced v/c Ratio	0.57	0.55	0.53	0.82	0.74	0.59	0.25

Intersection Summary



Lane Group	EBL	EBT	EBR	NBT	NBR	SBL	SBT
Lane Group Flow (vph)	337	323	304	1781	574	354	1075
v/c Ratio	0.78	0.75	0.70	0.77	0.56	0.75	0.33
Control Delay (s/veh)	47.1	38.1	32.0	26.8	4.2	59.9	2.8
Queue Delay	0.0	0.0	0.0	0.0	0.0	0.0	0.0
Total Delay (s/veh)	47.1	38.1	32.0	26.8	4.2	59.9	2.8
Queue Length 50th (ft)	208	167	130	351	0	82	14
Queue Length 95th (ft)	291	257	213	451	66	#141	42
Internal Link Dist (ft)		1416		886			412
Turn Bay Length (ft)			450		415	155	
Base Capacity (vph)	543	522	522	2318	1020	493	3227
Starvation Cap Reductn	0	0	0	0	0	0	0
Spillback Cap Reductn	0	0	0	0	0	0	0
Storage Cap Reductn	0	0	0	0	0	0	0
Reduced v/c Ratio	0.62	0.62	0.58	0.77	0.56	0.72	0.33

Intersection Summary

95th percentile volume exceeds capacity, queue may be longer.
Queue shown is maximum after two cycles.

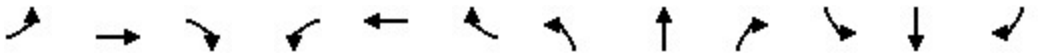

Lane Group	EBL	EBT	EBR	WBL	WBT	WBR	NBL	NBT	NBR	SBL	SBT	SBR
Lane Group Flow (vph)	538	247	178	121	259	311	424	1815	199	153	1149	541
v/c Ratio	0.88	0.25	0.31	0.51	0.42	0.72	0.90	0.93	0.28	0.78	0.74	0.68
Control Delay (s/veh)	58.4	27.5	5.2	55.0	37.8	24.0	67.7	40.3	6.8	74.8	36.1	10.4
Queue Delay	0.0	0.0	0.0	0.0	0.0	0.0	0.0	0.0	0.0	0.0	0.0	0.0
Total Delay (s/veh)	58.4	27.5	5.2	55.0	37.8	24.0	67.7	40.3	6.8	74.8	36.1	10.4
Queue Length 50th (ft)	165	63	0	37	77	68	132	375	9	48	227	30
Queue Length 95th (ft)	#347	93	44	79	112	156	#294	#690	68	#129	#393	175
Internal Link Dist (ft)		2549			2428			2703			886	
Turn Bay Length (ft)	205		205	205		130	200		305	355		535
Base Capacity (vph)	611	1719	851	255	1352	715	469	1954	706	196	1549	799
Starvation Cap Reductn	0	0	0	0	0	0	0	0	0	0	0	0
Spillback Cap Reductn	0	0	0	0	0	0	0	0	0	0	0	0
Storage Cap Reductn	0	0	0	0	0	0	0	0	0	0	0	0
Reduced v/c Ratio	0.88	0.14	0.21	0.47	0.19	0.43	0.90	0.93	0.28	0.78	0.74	0.68

Intersection Summary

95th percentile volume exceeds capacity, queue may be longer.
Queue shown is maximum after two cycles.

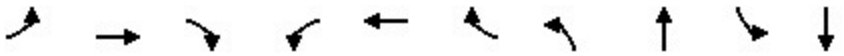

Lane Group	EBL	EBT	EBR	WBL	WBT	WBR	NBL	NBT	SBL	SBT
Lane Group Flow (vph)	58	98	71	89	118	255	52	1696	134	744
v/c Ratio	0.34	0.39	0.23	0.72	0.38	0.64	0.43	0.96	0.78	0.38
Control Delay (s/veh)	56.1	45.3	3.9	81.3	43.1	22.3	60.0	40.4	77.6	15.6
Queue Delay	0.0	0.0	0.0	0.0	0.0	0.0	0.0	0.0	0.0	0.0
Total Delay (s/veh)	56.1	45.3	3.9	81.3	43.1	22.3	60.0	40.4	77.6	15.6
Queue Length 50th (ft)	19	61	0	57	73	53	33	510	86	135
Queue Length 95th (ft)	45	107	13	#162	124	131	81	#905	#218	253
Internal Link Dist (ft)		810			1637			2644		1335
Turn Bay Length (ft)	130			205		200	215		210	
Base Capacity (vph)	173	517	512	125	542	571	148	1761	175	1949
Starvation Cap Reductn	0	0	0	0	0	0	0	0	0	0
Spillback Cap Reductn	0	0	0	0	0	0	0	0	0	0
Storage Cap Reductn	0	0	0	0	0	0	0	0	0	0
Reduced v/c Ratio	0.34	0.19	0.14	0.71	0.22	0.45	0.35	0.96	0.77	0.38

Intersection Summary

95th percentile volume exceeds capacity, queue may be longer.
Queue shown is maximum after two cycles.



Lane Group	WBL	WBR	NBT	NBR	SBL	SBT
Lane Group Flow (vph)	22	289	1557	28	100	702
v/c Ratio	0.08	0.65	0.77	0.03	0.51	0.28
Control Delay (s/veh)	36.5	16.1	19.8	7.2	51.3	5.5
Queue Delay	0.0	0.0	0.0	0.0	0.0	0.0
Total Delay (s/veh)	36.5	16.1	19.8	7.2	51.3	5.5
Queue Length 50th (ft)	11	26	306	2	54	51
Queue Length 95th (ft)	35	106	648	19	125	136
Internal Link Dist (ft)	3339		1159			2644
Turn Bay Length (ft)	150			200	300	
Base Capacity (vph)	644	729	2422	1088	324	3032
Starvation Cap Reductn	0	0	0	0	0	0
Spillback Cap Reductn	0	0	0	0	0	0
Storage Cap Reductn	0	0	0	0	0	0
Reduced v/c Ratio	0.03	0.40	0.64	0.03	0.31	0.23

Intersection Summary

Intersection: 1: La Sierra Av. & SR-91 WB Ramps

Movement	WB	WB	WB	NB	NB	NB	NB	NB	SB	SB	SB	SB
Directions Served	L	LTR	R	L	L	T	T	T	T	T	T	R
Maximum Queue (ft)	286	330	288	245	359	291	289	286	485	436	244	188
Average Queue (ft)	132	231	176	225	256	200	201	201	319	239	124	53
95th Queue (ft)	253	310	261	288	340	285	285	279	448	384	214	128
Link Distance (ft)		1183			444	444	444	444	949	949	949	
Upstream Blk Time (%)					0							
Queuing Penalty (veh)					1							
Storage Bay Dist (ft)	500		500	155								140
Storage Blk Time (%)				13	25						5	
Queuing Penalty (veh)				49	92						7	

Intersection: 2: La Sierra Av. & SR-91 EB Ramps

Movement	EB	EB	EB	NB	NB	NB	NB	SB	SB	SB	SB	SB
Directions Served	L	LTR	R	T	T	T	R	L	L	T	T	T
Maximum Queue (ft)	532	664	511	672	643	644	415	188	209	245	211	172
Average Queue (ft)	109	375	287	425	357	327	154	112	137	40	46	67
95th Queue (ft)	429	635	488	688	628	594	375	177	189	138	122	138
Link Distance (ft)	1430	1430		848	848	848				444	444	444
Upstream Blk Time (%)				0	0	0				0		
Queuing Penalty (veh)				0	0	0				1		
Storage Bay Dist (ft)			450				415	155	155			
Storage Blk Time (%)		8	0			4		2	16	1		
Queuing Penalty (veh)		19	1			23		8	54	3		

Intersection: 3: La Sierra Av. & Indiana Av./S. Indiana Av.

Movement	EB	EB	EB	EB	EB	WB	WB	WB	WB	WB	NB	NB
Directions Served	L	L	T	T	R	L	L	T	T	R	L	L
Maximum Queue (ft)	235	265	689	508	122	66	89	148	221	188	236	275
Average Queue (ft)	188	220	259	146	45	27	47	72	71	106	151	220
95th Queue (ft)	285	312	643	450	94	60	79	122	154	178	233	326
Link Distance (ft)			2554	2554				2432	2432			
Upstream Blk Time (%)												
Queuing Penalty (veh)												
Storage Bay Dist (ft)	205	205			205	205	205			130	200	200
Storage Blk Time (%)	7	29	2	0				0	0	7	4	8
Queuing Penalty (veh)	8	32	11	0				0	1	8	24	44

Intersection: 3: La Sierra Av. & Indiana Av./S. Indiana Av.

Movement	NB	NB	NB	NB	SB	SB	SB	SB	SB	SB		
Directions Served	T	T	T	R	L	L	T	T	T	R		
Maximum Queue (ft)	744	674	730	354	115	122	265	273	255	315		
Average Queue (ft)	355	352	384	119	44	61	161	173	161	144		
95th Queue (ft)	727	704	737	383	91	100	244	258	246	264		
Link Distance (ft)	2691	2691	2691				848	848	848			
Upstream Blk Time (%)												
Queuing Penalty (veh)												
Storage Bay Dist (ft)				305	355	355				535		
Storage Blk Time (%)	25		20									
Queuing Penalty (veh)	97		37									

Intersection: 4: La Sierra Av. & Victoria Av.

Movement	EB	EB	EB	EB	WB	WB	WB	NB	NB	NB	SB	SB
Directions Served	L	L	T	R	L	T	R	L	T	TR	L	T
Maximum Queue (ft)	48	87	138	58	165	142	188	274	569	582	156	202
Average Queue (ft)	9	39	61	29	63	61	84	66	312	342	79	76
95th Queue (ft)	32	80	112	54	124	116	149	205	535	553	143	172
Link Distance (ft)			843	843		1670			2640	2640		1333
Upstream Blk Time (%)												
Queuing Penalty (veh)												
Storage Bay Dist (ft)	130	130			205		200	215			210	
Storage Blk Time (%)		0	0		0		0		20			0
Queuing Penalty (veh)		0	0		0		0		9			0

Intersection: 4: La Sierra Av. & Victoria Av.

Movement	SB	B20	B20
Directions Served	TR	T	T
Maximum Queue (ft)	233	19	67
Average Queue (ft)	86	1	3
95th Queue (ft)	191	12	28
Link Distance (ft)	1333	2691	2691
Upstream Blk Time (%)			
Queuing Penalty (veh)			
Storage Bay Dist (ft)			
Storage Blk Time (%)			
Queuing Penalty (veh)			

Intersection: 5: La Sierra Av. & McAllister Pkwy.

Movement	WB	WB	NB	NB	NB	SB	SB	SB
Directions Served	L	R	T	T	R	L	T	T
Maximum Queue (ft)	80	207	338	322	97	138	150	169
Average Queue (ft)	13	101	178	159	11	66	39	57
95th Queue (ft)	49	175	291	267	57	118	114	140
Link Distance (ft)		3360	1207	1207			2640	2640
Upstream Blk Time (%)								
Queuing Penalty (veh)								
Storage Bay Dist (ft)	150				200	300		
Storage Blk Time (%)		3		3				
Queuing Penalty (veh)		1		1				

Network Summary

Network wide Queuing Penalty: 530



Lane Group	WBL	WBT	WBR	NBL	NBT	SBT	SBR
Lane Group Flow (vph)	410	400	376	460	1064	1609	310
v/c Ratio	0.83	0.79	0.74	0.84	0.35	0.78	0.41
Control Delay (s/veh)	47.2	37.8	33.0	39.9	24.8	30.8	10.8
Queue Delay	0.2	0.2	0.0	0.0	0.0	0.0	0.0
Total Delay (s/veh)	47.4	37.9	33.0	39.9	24.8	30.8	10.8
Queue Length 50th (ft)	248	205	172	159	245	346	51
Queue Length 95th (ft)	357	319	274	m193	285	414	125
Internal Link Dist (ft)		1180			412	935	
Turn Bay Length (ft)	500		500	155			140
Base Capacity (vph)	571	571	577	562	3082	2052	749
Starvation Cap Reductn	0	0	0	0	0	0	0
Spillback Cap Reductn	11	10	0	0	0	0	0
Storage Cap Reductn	0	0	0	0	0	0	0
Reduced v/c Ratio	0.73	0.71	0.65	0.82	0.35	0.78	0.41

Intersection Summary

m Volume for 95th percentile queue is metered by upstream signal.



Lane Group	EBL	EBT	EBR	NBT	NBR	SBL	SBT
Lane Group Flow (vph)	207	494	499	1262	359	465	1703
v/c Ratio	0.32	0.88	0.80	0.80	0.49	0.86	0.65
Control Delay (s/veh)	21.9	46.0	33.7	37.4	5.7	36.3	12.8
Queue Delay	0.0	0.0	0.0	0.0	0.0	0.0	0.4
Total Delay (s/veh)	21.9	46.0	33.7	37.4	5.7	36.3	13.2
Queue Length 50th (ft)	90	296	243	283	0	81	262
Queue Length 95th (ft)	144	#482	373	#367	67	m#216	401
Internal Link Dist (ft)		1416		886			412
Turn Bay Length (ft)			450		415	155	
Base Capacity (vph)	722	622	681	1578	734	542	2610
Starvation Cap Reductn	0	0	0	0	0	0	410
Spillback Cap Reductn	0	0	0	0	0	0	0
Storage Cap Reductn	0	0	0	0	0	0	0
Reduced v/c Ratio	0.29	0.79	0.73	0.80	0.49	0.86	0.77

Intersection Summary

95th percentile volume exceeds capacity, queue may be longer.
Queue shown is maximum after two cycles.
m Volume for 95th percentile queue is metered by upstream signal.

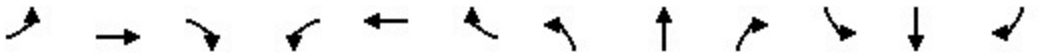

Lane Group	EBL	EBT	EBR	WBL	WBT	WBR	NBL	NBT	NBR	SBL	SBT	SBR
Lane Group Flow (vph)	452	420	471	205	232	298	275	1055	145	346	1903	457
v/c Ratio	1.14	0.44	0.87	0.70	0.27	0.59	1.03	0.61	0.23	0.85	0.99	0.53
Control Delay (s/veh)	135.3	33.8	39.9	63.5	33.3	18.8	113.2	33.4	5.8	67.9	52.8	5.0
Queue Delay	0.0	0.0	0.0	0.0	0.0	0.0	0.0	0.0	0.0	0.0	0.0	0.0
Total Delay (s/veh)	135.3	33.8	39.9	63.5	33.3	18.8	113.2	33.4	5.8	67.9	52.8	5.0
Queue Length 50th (ft)	~197	127	206	73	68	71	~109	230	0	125	~500	0
Queue Length 95th (ft)	#334	172	342	#133	101	157	#217	315	46	#228	#709	75
Internal Link Dist (ft)		2549			2428			2703			886	
Turn Bay Length (ft)	205		205	205		130	200		305	355		535
Base Capacity (vph)	395	1334	693	312	1248	663	267	1717	622	417	1926	865
Starvation Cap Reductn	0	0	0	0	0	0	0	0	0	0	0	0
Spillback Cap Reductn	0	0	0	0	0	0	0	0	0	0	0	0
Storage Cap Reductn	0	0	0	0	0	0	0	0	0	0	0	0
Reduced v/c Ratio	1.14	0.31	0.68	0.66	0.19	0.45	1.03	0.61	0.23	0.83	0.99	0.53

Intersection Summary

~ Volume exceeds capacity, queue is theoretically infinite.
Queue shown is maximum after two cycles.

95th percentile volume exceeds capacity, queue may be longer.
Queue shown is maximum after two cycles.

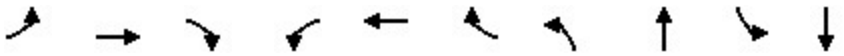

Lane Group	EBL	EBT	EBR	WBL	WBT	WBR	NBL	NBT	SBL	SBT
Lane Group Flow (vph)	69	124	177	331	89	206	32	1106	227	1903
v/c Ratio	0.37	0.48	0.46	1.26	0.19	0.38	0.38	0.89	0.81	1.06
Control Delay (s/veh)	56.1	47.2	8.3	182.8	33.4	6.5	64.3	42.0	65.3	67.2
Queue Delay	0.0	0.0	0.0	0.0	0.0	0.0	0.0	0.0	0.0	0.0
Total Delay (s/veh)	56.1	47.2	8.3	182.8	33.4	6.5	64.3	42.0	65.3	67.2
Queue Length 50th (ft)	23	78	0	~274	49	0	21	350	142	~755
Queue Length 95th (ft)	52	134	46	#536	91	54	#60	#611	#308	#1131
Internal Link Dist (ft)		810			1637			2644		1335
Turn Bay Length (ft)	130			205		200	215		210	
Base Capacity (vph)	192	521	575	262	680	701	85	1249	314	1791
Starvation Cap Reductn	0	0	0	0	0	0	0	0	0	0
Spillback Cap Reductn	0	0	0	0	0	0	0	0	0	0
Storage Cap Reductn	0	0	0	0	0	0	0	0	0	0
Reduced v/c Ratio	0.36	0.24	0.31	1.26	0.13	0.29	0.38	0.89	0.72	1.06

Intersection Summary

~ Volume exceeds capacity, queue is theoretically infinite.
Queue shown is maximum after two cycles.

95th percentile volume exceeds capacity, queue may be longer.
Queue shown is maximum after two cycles.



Lane Group	WBL	WBR	NBT	NBR	SBL	SBT
Lane Group Flow (vph)	10	180	959	15	324	1972
v/c Ratio	0.04	0.46	0.67	0.02	0.73	0.79
Control Delay (s/veh)	35.9	10.0	25.8	12.3	42.0	12.0
Queue Delay	0.0	0.0	0.0	0.0	0.0	0.0
Total Delay (s/veh)	35.9	10.0	25.8	12.3	42.0	12.0
Queue Length 50th (ft)	5	0	204	1	155	258
Queue Length 95th (ft)	21	57	428	17	320	670
Internal Link Dist (ft)	3339		1159			2644
Turn Bay Length (ft)	150			200	300	
Base Capacity (vph)	625	675	1731	764	706	3136
Starvation Cap Reductn	0	0	0	0	0	0
Spillback Cap Reductn	0	0	0	0	0	0
Storage Cap Reductn	0	0	0	0	0	0
Reduced v/c Ratio	0.02	0.27	0.55	0.02	0.46	0.63

Intersection Summary

Intersection: 1: La Sierra Av. & SR-91 WB Ramps

Movement	WB	WB	WB	NB	NB	NB	NB	NB	SB	SB	SB	SB
Directions Served	L	LTR	R	L	L	T	T	T	T	T	T	R
Maximum Queue (ft)	315	386	355	207	232	244	241	238	927	835	546	190
Average Queue (ft)	191	269	211	139	165	175	171	178	683	597	296	130
95th Queue (ft)	285	354	316	198	220	233	227	233	941	853	544	240
Link Distance (ft)		1183			444	444	444	444	949	949	949	
Upstream Blk Time (%)									3	0		
Queuing Penalty (veh)									0	0		
Storage Bay Dist (ft)	500		500	155								140
Storage Blk Time (%)				2	8						23	0
Queuing Penalty (veh)				4	19						70	0

Intersection: 2: La Sierra Av. & SR-91 EB Ramps

Movement	EB	EB	EB	NB	NB	NB	NB	SB	SB	SB	SB	SB
Directions Served	L	LTR	R	T	T	T	R	L	L	T	T	T
Maximum Queue (ft)	315	723	422	434	378	385	228	191	221	314	350	349
Average Queue (ft)	33	336	279	274	236	238	80	107	138	125	126	149
95th Queue (ft)	192	559	425	424	381	370	163	168	197	268	266	285
Link Distance (ft)	1430	1430		848	848	848				444	444	444
Upstream Blk Time (%)		0								0	0	0
Queuing Penalty (veh)		0								2	2	2
Storage Bay Dist (ft)			450				415	155	155			
Storage Blk Time (%)		3	1			1		1	6	6		
Queuing Penalty (veh)		14	8			3		6	36	25		

Intersection: 3: La Sierra Av. & Indiana Av./S. Indiana Av.

Movement	EB	EB	EB	EB	EB	WB	WB	WB	WB	WB	NB	NB
Directions Served	L	L	T	T	R	L	L	T	T	R	L	L
Maximum Queue (ft)	235	265	1352	1260	384	130	142	122	237	189	210	245
Average Queue (ft)	227	262	811	718	189	59	81	58	57	92	105	120
95th Queue (ft)	272	284	1431	1383	320	112	129	102	135	167	175	199
Link Distance (ft)			2554	2554				2432	2432			
Upstream Blk Time (%)												
Queuing Penalty (veh)												
Storage Bay Dist (ft)	205	205			205	205	205			130	200	200
Storage Blk Time (%)	32	82	2	0	8				0	4	0	1
Queuing Penalty (veh)	61	159	7	0	15				1	4	1	4

Intersection: 3: La Sierra Av. & Indiana Av./S. Indiana Av.

Movement	NB	NB	NB	NB	SB	SB	SB	SB	SB	SB		
Directions Served	T	T	T	R	L	L	T	T	T	R		
Maximum Queue (ft)	250	252	319	106	333	445	855	858	866	660		
Average Queue (ft)	138	149	172	38	134	383	627	634	644	365		
95th Queue (ft)	225	244	284	82	233	584	890	903	916	836		
Link Distance (ft)	2691	2691	2691				848	848	848			
Upstream Blk Time (%)							1	2	3			
Queuing Penalty (veh)							11	14	24			
Storage Bay Dist (ft)				305	355	355				535		
Storage Blk Time (%)	2		0		0	0	48		30	2		
Queuing Penalty (veh)	4		1		0	1	152		125	14		

Intersection: 4: La Sierra Av. & Victoria Av.

Movement	EB	EB	EB	EB	WB	WB	WB	NB	NB	NB	SB	SB
Directions Served	L	L	T	R	L	T	R	L	T	TR	L	T
Maximum Queue (ft)	40	100	168	199	305	1477	330	274	466	473	275	1434
Average Queue (ft)	12	40	72	85	294	1046	240	44	238	268	234	956
95th Queue (ft)	36	80	138	152	354	1933	458	144	393	429	349	1671
Link Distance (ft)			843	843		1670			2640	2640		1333
Upstream Blk Time (%)						22						17
Queuing Penalty (veh)						0						202
Storage Bay Dist (ft)	130	130			205		200	215			210	
Storage Blk Time (%)		0	2		82	0	0	0	14		6	43
Queuing Penalty (veh)		0	1		227	0	1	0	4		54	91

Intersection: 4: La Sierra Av. & Victoria Av.

Movement	SB	B20	B20	B20
Directions Served	TR	T	T	
Maximum Queue (ft)	1424	2647	2678	755
Average Queue (ft)	964	406	493	167
95th Queue (ft)	1667	1577	1805	825
Link Distance (ft)	1333	2691	2691	2691
Upstream Blk Time (%)	18	0	0	
Queuing Penalty (veh)	211	0	1	
Storage Bay Dist (ft)				
Storage Blk Time (%)				
Queuing Penalty (veh)				

Intersection: 5: La Sierra Av. & McAllister Pkwy.

Movement	WB	WB	NB	NB	NB	SB	SB	SB
Directions Served	L	R	T	T	R	L	T	T
Maximum Queue (ft)	40	133	263	265	36	290	277	297
Average Queue (ft)	7	47	133	109	6	152	74	91
95th Queue (ft)	26	95	223	206	25	253	191	219
Link Distance (ft)		3360	1207	1207			2640	2640
Upstream Blk Time (%)								
Queuing Penalty (veh)								
Storage Bay Dist (ft)	150				200	300		
Storage Blk Time (%)		0		1		0	0	
Queuing Penalty (veh)		0		0		3	0	

Network Summary

Network wide Queuing Penalty: 1585

APPENDIX 5.7: EAP (2030) (PROJECT ONLY) CONDITIONS INTERSECTION OPERATIONS ANALYSIS WORKSHEETS WITH IMPROVEMENTS

This Page Intentionally Left Blank

Lane Group	WBL	NBT	SBL	SBT
Lane Configurations				
Traffic Volume (vph)	71	122	270	143
Future Volume (vph)	71	122	270	143
Turn Type	Prot	NA	Prot	NA
Protected Phases	8	2	1	6
Permitted Phases				
Detector Phase	8	2	1	6
Switch Phase				
Minimum Initial (s)	5.0	10.0	5.0	10.0
Minimum Split (s)	23.8	23.8	10.8	23.8
Total Split (s)	24.0	25.0	71.0	96.0
Total Split (%)	20.0%	20.8%	59.2%	80.0%
Yellow Time (s)	4.8	4.8	4.8	4.8
All-Red Time (s)	1.0	1.0	1.0	1.0
Lost Time Adjust (s)	0.0	0.0	0.0	0.0
Total Lost Time (s)	5.8	5.8	5.8	5.8
Lead/Lag		Lag	Lead	
Lead-Lag Optimize?		Yes	Yes	
Recall Mode	None	None	None	None
Act Effct Green (s)	18.4	11.4	14.1	31.4
Actuated g/C Ratio	0.30	0.19	0.23	0.51
v/c Ratio	0.97	0.24	0.70	0.16
Control Delay (s/veh)	43.7	20.5	32.0	8.0
Queue Delay	0.0	0.0	0.0	0.0
Total Delay (s/veh)	43.7	20.5	32.0	8.0
LOS	D	C	C	A
Approach Delay (s/veh)	43.7	20.5		23.7
Approach LOS	D	C		C

Intersection Summary	
Cycle Length: 120	
Actuated Cycle Length: 61.5	
Natural Cycle: 65	
Control Type: Actuated-Uncoordinated	
Maximum v/c Ratio: 0.97	
Intersection Signal Delay (s/veh): 33.9	Intersection LOS: C
Intersection Capacity Utilization 75.8%	ICU Level of Service D
Analysis Period (min) 15	

Splits and Phases: 6: La Sierra Av. & El Sobrante Rd.

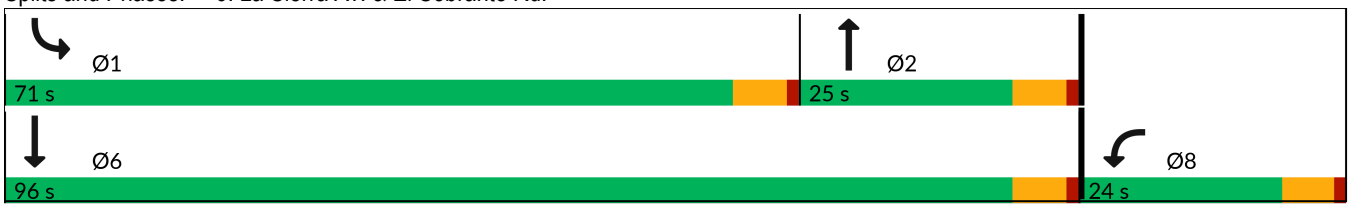



Movement	WBL	WBR	NBT	NBR	SBL	SBT
Lane Configurations						
Traffic Volume (veh/h)	71	552	122	25	270	143
Future Volume (veh/h)	71	552	122	25	270	143
Initial Q (Qb), veh	0	0	0	0	0	0
Lane Width Adj.	1.00	1.00	1.00	1.00	1.00	1.00
Ped-Bike Adj(A_pbT)	1.00	1.00		1.00	1.00	
Parking Bus, Adj	1.00	1.00	1.00	1.00	1.00	1.00
Work Zone On Approach	No		No			No
Adj Sat Flow, veh/h/ln	1870	1870	1870	1870	1870	1870
Adj Flow Rate, veh/h	75	318	128	21	284	151
Peak Hour Factor	0.95	0.95	0.95	0.95	0.95	0.95
Percent Heavy Veh, %	2	2	2	2	2	2
Cap, veh/h	86	363	538	87	349	913
Arrive On Green	0.28	0.28	0.18	0.18	0.20	0.49
Sat Flow, veh/h	308	1307	3159	493	1781	1870
Grp Volume(v), veh/h	394	0	73	76	284	151
Grp Sat Flow(s),veh/h/ln	1620	0	1777	1782	1781	1870
Q Serve(g_s), s	11.5	0.0	1.8	1.8	7.6	2.2
Cycle Q Clear(g_c), s	11.5	0.0	1.8	1.8	7.6	2.2
Prop In Lane	0.19	0.81		0.28	1.00	
Lane Grp Cap(c), veh/h	450	0	312	313	349	913
V/C Ratio(X)	0.88	0.00	0.23	0.24	0.81	0.17
Avail Cap(c_a), veh/h	594	0	687	689	2339	3398
HCM Platoon Ratio	1.00	1.00	1.00	1.00	1.00	1.00
Upstream Filter(I)	1.00	0.00	1.00	1.00	1.00	1.00
Uniform Delay (d), s/veh	17.1	0.0	17.6	17.6	19.1	7.1
Incr Delay (d2), s/veh	9.2	0.0	0.4	0.4	1.8	0.1
Initial Q Delay(d3), s/veh	0.0	0.0	0.0	0.0	0.0	0.0
%ile BackOfQ(50%),veh/ln	4.5	0.0	0.6	0.6	2.6	0.5
Unsig. Movement Delay, s/veh						
LnGrp Delay(d), s/veh	26.3	0.0	18.0	18.0	20.9	7.2
LnGrp LOS	C		B	B	C	A
Approach Vol, veh/h	394		149			435
Approach Delay, s/veh	26.3		18.0			16.1
Approach LOS	C		B			B

Timer - Assigned Phs	1	2				6	8
Phs Duration (G+Y+Rc), s	15.5	14.5				30.0	19.6
Change Period (Y+Rc), s	5.8	5.8				5.8	5.8
Max Green Setting (Gmax), s	65.2	19.2				90.2	18.2
Max Q Clear Time (g_c+I1), s	9.6	3.8				4.2	13.5
Green Ext Time (p_c), s	0.4	0.5				0.7	0.3

Intersection Summary	
HCM 7th Control Delay, s/veh	20.5
HCM 7th LOS	C

Lane Group	EBL	EBT	WBT	SBL
Lane Configurations				
Traffic Volume (vph)	55	260	540	57
Future Volume (vph)	55	260	540	57
Turn Type	Prot	NA	NA	Prot
Protected Phases	7	4	8	6
Permitted Phases				
Detector Phase	7	4	8	6
Switch Phase				
Minimum Initial (s)	5.0	10.0	10.0	5.0
Minimum Split (s)	10.8	23.8	23.8	23.8
Total Split (s)	23.0	81.0	58.0	39.0
Total Split (%)	19.2%	67.5%	48.3%	32.5%
Yellow Time (s)	3.6	4.8	4.8	3.6
All-Red Time (s)	1.0	1.0	1.0	1.0
Lost Time Adjust (s)	0.0	0.0	0.0	0.0
Total Lost Time (s)	4.6	5.8	5.8	4.6
Lead/Lag	Lead		Lag	
Lead-Lag Optimize?	Yes		Yes	
Recall Mode	None	None	None	None
Act Effct Green (s)	7.4	25.6	20.0	9.1
Actuated g/C Ratio	0.18	0.64	0.50	0.23
v/c Ratio	0.17	0.23	0.39	0.33
Control Delay (s/veh)	21.9	5.9	11.7	13.5
Queue Delay	0.0	0.0	0.0	0.0
Total Delay (s/veh)	21.9	5.9	11.7	13.5
LOS	C	A	B	B
Approach Delay (s/veh)		8.7	11.7	13.5
Approach LOS		A	B	B

Intersection Summary	
Cycle Length: 120	
Actuated Cycle Length: 40.1	
Natural Cycle: 60	
Control Type: Actuated-Uncoordinated	
Maximum v/c Ratio: 0.39	
Intersection Signal Delay (s/veh): 11.1	Intersection LOS: B
Intersection Capacity Utilization 43.1%	ICU Level of Service A
Analysis Period (min) 15	

Splits and Phases: 7: El Sobrante Rd. & McAllister St.

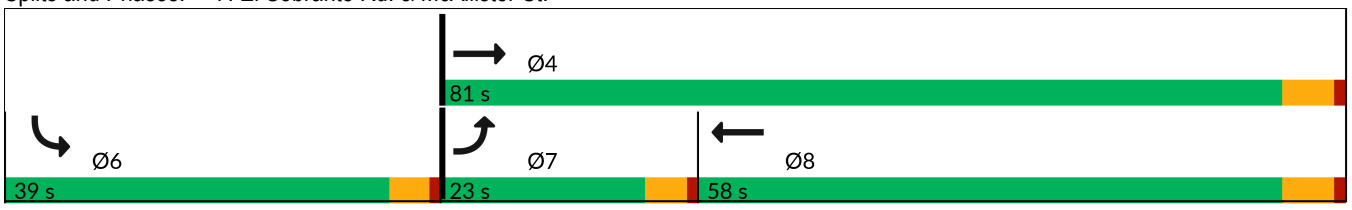

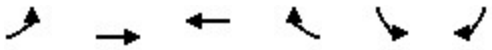

Movement	EBL	EBT	WBT	WBR	SBL	SBR
Lane Configurations						
Traffic Volume (veh/h)	55	260	540	111	57	79
Future Volume (veh/h)	55	260	540	111	57	79
Initial Q (Qb), veh	0	0	0	0	0	0
Lane Width Adj.	1.00	1.00	1.00	1.00	1.00	1.00
Ped-Bike Adj(A_pbT)	1.00			1.00	1.00	1.00
Parking Bus, Adj	1.00	1.00	1.00	1.00	1.00	1.00
Work Zone On Approach		No	No		No	
Adj Sat Flow, veh/h/ln	1870	1870	1870	1870	1870	1870
Adj Flow Rate, veh/h	57	271	562	116	59	82
Peak Hour Factor	0.96	0.96	0.96	0.96	0.96	0.96
Percent Heavy Veh, %	2	2	2	2	2	2
Cap, veh/h	111	1044	1027	211	78	108
Arrive On Green	0.06	0.56	0.35	0.35	0.11	0.11
Sat Flow, veh/h	1781	1870	3028	604	691	960
Grp Volume(v), veh/h	57	271	340	338	142	0
Grp Sat Flow(s),veh/h/ln	1781	1870	1777	1762	1663	0
Q Serve(g_s), s	1.0	2.4	4.8	4.9	2.6	0.0
Cycle Q Clear(g_c), s	1.0	2.4	4.8	4.9	2.6	0.0
Prop In Lane	1.00			0.34	0.42	0.58
Lane Grp Cap(c), veh/h	111	1044	622	617	188	0
V/C Ratio(X)	0.51	0.26	0.55	0.55	0.76	0.00
Avail Cap(c_a), veh/h	1038	4453	2936	2911	1811	0
HCM Platoon Ratio	1.00	1.00	1.00	1.00	1.00	1.00
Upstream Filter(I)	1.00	1.00	1.00	1.00	1.00	0.00
Uniform Delay (d), s/veh	14.3	3.6	8.2	8.3	13.6	0.0
Incr Delay (d2), s/veh	1.4	0.1	0.7	0.8	2.4	0.0
Initial Q Delay(d3), s/veh	0.0	0.0	0.0	0.0	0.0	0.0
%ile BackOfQ(50%),veh/ln	0.3	0.1	1.0	1.0	0.8	0.0
Unsig. Movement Delay, s/veh						
LnGrp Delay(d), s/veh	15.7	3.7	9.0	9.0	15.9	0.0
LnGrp LOS	B	A	A	A	B	
Approach Vol, veh/h		328	678		142	
Approach Delay, s/veh		5.8	9.0		15.9	
Approach LOS		A	A		B	

Timer - Assigned Phs			4		6	7	8
Phs Duration (G+Y+Rc), s			23.4		8.2	6.6	16.9
Change Period (Y+Rc), s			5.8		4.6	4.6	5.8
Max Green Setting (Gmax), s			75.2		34.4	18.4	52.2
Max Q Clear Time (g_c+I1), s			4.4		4.6	3.0	6.9
Green Ext Time (p_c), s			1.5		0.2	0.0	4.2

Intersection Summary	
HCM 7th Control Delay, s/veh	9.0
HCM 7th LOS	A

Lane Group	WBL	NBT	SBL	SBT
Lane Configurations				
Traffic Volume (vph)	85	249	740	534
Future Volume (vph)	85	249	740	534
Turn Type	Prot	NA	Prot	NA
Protected Phases	8	2	1	6
Permitted Phases				
Detector Phase	8	2	1	6
Switch Phase				
Minimum Initial (s)	5.0	10.0	5.0	10.0
Minimum Split (s)	23.8	23.8	10.8	23.8
Total Split (s)	23.8	25.2	71.0	96.2
Total Split (%)	19.8%	21.0%	59.2%	80.2%
Yellow Time (s)	4.8	4.8	4.8	4.8
All-Red Time (s)	1.0	1.0	1.0	1.0
Lost Time Adjust (s)	0.0	0.0	0.0	0.0
Total Lost Time (s)	5.8	5.8	5.8	5.8
Lead/Lag		Lag	Lead	
Lead-Lag Optimize?		Yes	Yes	
Recall Mode	None	None	None	None
Act Effct Green (s)	18.5	15.1	48.9	70.0
Actuated g/C Ratio	0.18	0.15	0.49	0.70
v/c Ratio	1.14	0.69	0.92	0.44
Control Delay (s/veh)	114.6	44.4	41.1	7.4
Queue Delay	0.0	0.0	0.0	0.0
Total Delay (s/veh)	114.6	44.4	41.1	7.4
LOS	F	D	D	A
Approach Delay (s/veh)	114.6	44.4		27.0
Approach LOS	F	D		C

Intersection Summary	
Cycle Length: 120	
Actuated Cycle Length: 100.4	
Natural Cycle: 100	
Control Type: Actuated-Uncoordinated	
Maximum v/c Ratio: 1.14	
Intersection Signal Delay (s/veh): 49.0	Intersection LOS: D
Intersection Capacity Utilization 93.0%	ICU Level of Service F
Analysis Period (min) 15	

Splits and Phases: 6: La Sierra Av. & El Sobrante Rd.

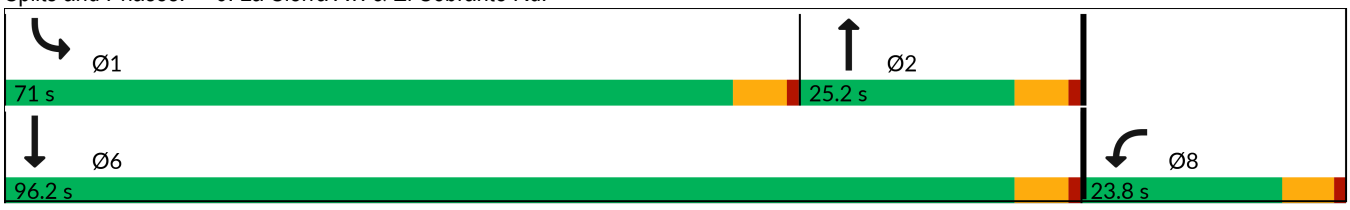



Movement	WBL	WBR	NBT	NBR	SBL	SBT
Lane Configurations						
Traffic Volume (veh/h)	85	368	249	100	740	534
Future Volume (veh/h)	85	368	249	100	740	534
Initial Q (Qb), veh	0	0	0	0	0	0
Lane Width Adj.	1.00	1.00	1.00	1.00	1.00	1.00
Ped-Bike Adj(A_pbT)	1.00	1.00		1.00	1.00	
Parking Bus, Adj	1.00	1.00	1.00	1.00	1.00	1.00
Work Zone On Approach	No		No			No
Adj Sat Flow, veh/h/ln	1870	1870	1870	1870	1870	1870
Adj Flow Rate, veh/h	91	235	268	81	796	574
Peak Hour Factor	0.93	0.93	0.93	0.93	0.93	0.93
Percent Heavy Veh, %	2	2	2	2	2	2
Cap, veh/h	93	239	359	106	832	1244
Arrive On Green	0.20	0.20	0.13	0.13	0.47	0.67
Sat Flow, veh/h	455	1176	2797	800	1781	1870
Grp Volume(v), veh/h	327	0	174	175	796	574
Grp Sat Flow(s),veh/h/ln	1636	0	1777	1726	1781	1870
Q Serve(g_s), s	17.6	0.0	8.3	8.6	38.1	13.1
Cycle Q Clear(g_c), s	17.6	0.0	8.3	8.6	38.1	13.1
Prop In Lane	0.28	0.72		0.46	1.00	
Lane Grp Cap(c), veh/h	333	0	236	229	832	1244
V/C Ratio(X)	0.98	0.00	0.74	0.76	0.96	0.46
Avail Cap(c_a), veh/h	333	0	390	379	1314	1913
HCM Platoon Ratio	1.00	1.00	1.00	1.00	1.00	1.00
Upstream Filter(I)	1.00	0.00	1.00	1.00	1.00	1.00
Uniform Delay (d), s/veh	35.0	0.0	36.9	37.0	22.7	7.1
Incr Delay (d2), s/veh	44.1	0.0	4.5	5.2	9.1	0.3
Initial Q Delay(d3), s/veh	0.0	0.0	0.0	0.0	0.0	0.0
%ile BackOfQ(50%),veh/ln	10.6	0.0	3.6	3.7	15.2	3.6
Unsig. Movement Delay, s/veh						
LnGrp Delay(d), s/veh	79.1	0.0	41.4	42.2	31.8	7.4
LnGrp LOS	E		D	D	C	A
Approach Vol, veh/h	327		349			1370
Approach Delay, s/veh	79.1		41.8			21.6
Approach LOS	E		D			C

Timer - Assigned Phs	1	2				6	8
Phs Duration (G+Y+Rc), s	47.1	17.5				64.6	23.8
Change Period (Y+Rc), s	5.8	5.8				5.8	5.8
Max Green Setting (Gmax), s	65.2	19.4				90.4	18.0
Max Q Clear Time (g_c+I1), s	40.1	10.6				15.1	19.6
Green Ext Time (p_c), s	1.2	1.1				3.5	0.0

Intersection Summary	
HCM 7th Control Delay, s/veh	34.2
HCM 7th LOS	C

Lane Group	EBL	EBT	WBT	SBL
Lane Configurations				
Traffic Volume (vph)	68	774	350	50
Future Volume (vph)	68	774	350	50
Turn Type	Prot	NA	NA	Prot
Protected Phases	7	4	8	6
Permitted Phases				
Detector Phase	7	4	8	6
Switch Phase				
Minimum Initial (s)	5.0	10.0	10.0	5.0
Minimum Split (s)	10.8	23.8	23.8	23.8
Total Split (s)	18.0	91.0	73.0	29.0
Total Split (%)	15.0%	75.8%	60.8%	24.2%
Yellow Time (s)	3.6	4.8	4.8	3.6
All-Red Time (s)	1.0	1.0	1.0	1.0
Lost Time Adjust (s)	0.0	0.0	0.0	0.0
Total Lost Time (s)	4.6	5.8	5.8	4.6
Lead/Lag	Lead		Lag	
Lead-Lag Optimize?	Yes		Yes	
Recall Mode	None	None	None	None
Act Effct Green (s)	7.2	27.3	20.7	8.7
Actuated g/C Ratio	0.15	0.58	0.44	0.18
v/c Ratio	0.27	0.77	0.27	0.47
Control Delay (s/veh)	25.3	13.4	10.7	15.7
Queue Delay	0.0	0.0	0.0	0.0
Total Delay (s/veh)	25.3	13.4	10.7	15.7
LOS	C	B	B	B
Approach Delay (s/veh)		14.4	10.7	15.7
Approach LOS		B	B	B

Intersection Summary	
Cycle Length: 120	
Actuated Cycle Length: 47.4	
Natural Cycle: 60	
Control Type: Actuated-Uncoordinated	
Maximum v/c Ratio: 0.77	
Intersection Signal Delay (s/veh): 13.5	Intersection LOS: B
Intersection Capacity Utilization 59.4%	ICU Level of Service B
Analysis Period (min) 15	

Splits and Phases: 7: El Sobrante Rd. & McAllister St.

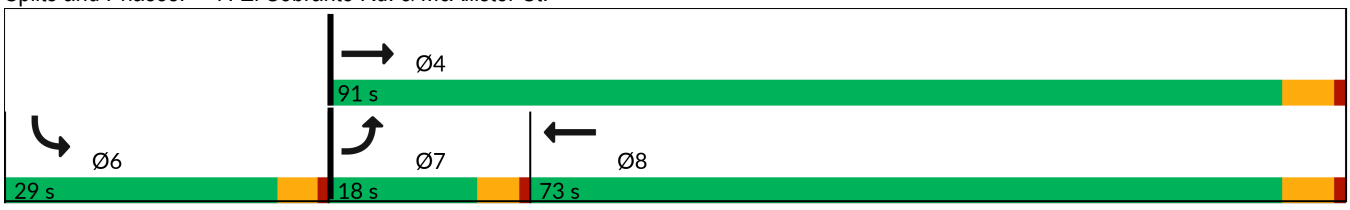

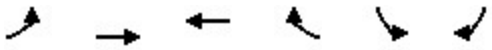

Movement	EBL	EBT	WBT	WBR	SBL	SBR
Lane Configurations						
Traffic Volume (veh/h)	68	774	350	40	50	118
Future Volume (veh/h)	68	774	350	40	50	118
Initial Q (Qb), veh	0	0	0	0	0	0
Lane Width Adj.	1.00	1.00	1.00	1.00	1.00	1.00
Ped-Bike Adj(A_pbT)	1.00			1.00	1.00	1.00
Parking Bus, Adj	1.00	1.00	1.00	1.00	1.00	1.00
Work Zone On Approach		No	No		No	
Adj Sat Flow, veh/h/ln	1870	1870	1870	1870	1870	1870
Adj Flow Rate, veh/h	72	823	372	43	53	126
Peak Hour Factor	0.94	0.94	0.94	0.94	0.94	0.94
Percent Heavy Veh, %	2	2	2	2	2	2
Cap, veh/h	127	1073	1208	139	68	161
Arrive On Green	0.07	0.57	0.38	0.38	0.14	0.14
Sat Flow, veh/h	1781	1870	3305	369	483	1148
Grp Volume(v), veh/h	72	823	205	210	180	0
Grp Sat Flow(s),veh/h/ln	1781	1870	1777	1804	1640	0
Q Serve(g_s), s	1.4	12.2	3.0	3.0	3.9	0.0
Cycle Q Clear(g_c), s	1.4	12.2	3.0	3.0	3.9	0.0
Prop In Lane	1.00			0.20	0.29	0.70
Lane Grp Cap(c), veh/h	127	1073	668	678	230	0
V/C Ratio(X)	0.57	0.77	0.31	0.31	0.78	0.00
Avail Cap(c_a), veh/h	657	4383	3285	3335	1100	0
HCM Platoon Ratio	1.00	1.00	1.00	1.00	1.00	1.00
Upstream Filter(I)	1.00	1.00	1.00	1.00	1.00	0.00
Uniform Delay (d), s/veh	16.3	5.9	8.0	8.0	15.1	0.0
Incr Delay (d2), s/veh	1.5	1.2	0.3	0.3	2.2	0.0
Initial Q Delay(d3), s/veh	0.0	0.0	0.0	0.0	0.0	0.0
%ile BackOfQ(50%),veh/ln	0.5	1.4	0.7	0.7	1.2	0.0
Unsig. Movement Delay, s/veh						
LnGrp Delay(d), s/veh	17.8	7.1	8.3	8.3	17.3	0.0
LnGrp LOS	B	A	A	A	B	
Approach Vol, veh/h		895	415		180	
Approach Delay, s/veh		7.9	8.3		17.3	
Approach LOS		A	A		B	

Timer - Assigned Phs	4	6	7	8
Phs Duration (G+Y+Rc), s	26.7	9.7	7.2	19.5
Change Period (Y+Rc), s	5.8	4.6	4.6	5.8
Max Green Setting (Gmax), s	85.2	24.4	13.4	67.2
Max Q Clear Time (g_c+I1), s	14.2	5.9	3.4	5.0
Green Ext Time (p_c), s	6.7	0.2	0.0	2.4

Intersection Summary	
HCM 7th Control Delay, s/veh	9.2
HCM 7th LOS	A

APPENDIX 5.8: EAP (2030) (PROJECT PLUS HIGHLAND GROVE IV PLUS GREENTREE) CONDITIONS INTERSECTION OPERATIONS ANALYSIS WORKSHEETS WITH IMPROVEMENTS

This Page Intentionally Left Blank

Lane Group	WBL	NBT	SBL	SBT
Lane Configurations				
Traffic Volume (vph)	89	122	311	143
Future Volume (vph)	89	122	311	143
Turn Type	Prot	NA	Prot	NA
Protected Phases	8	2	1	6
Permitted Phases				
Detector Phase	8	2	1	6
Switch Phase				
Minimum Initial (s)	5.0	10.0	5.0	10.0
Minimum Split (s)	23.8	23.8	10.8	23.8
Total Split (s)	23.9	24.1	72.0	96.1
Total Split (%)	19.9%	20.1%	60.0%	80.1%
Yellow Time (s)	4.8	4.8	4.8	4.8
All-Red Time (s)	1.0	1.0	1.0	1.0
Lost Time Adjust (s)	0.0	0.0	0.0	0.0
Total Lost Time (s)	5.8	5.8	5.8	5.8
Lead/Lag		Lag	Lead	
Lead-Lag Optimize?		Yes	Yes	
Recall Mode	None	None	None	None
Act Effct Green (s)	18.3	11.4	16.9	34.2
Actuated g/C Ratio	0.28	0.18	0.26	0.53
v/c Ratio	1.22	0.26	0.70	0.15
Control Delay (s/veh)	131.7	21.4	30.5	7.6
Queue Delay	0.0	0.0	0.0	0.0
Total Delay (s/veh)	131.7	21.4	30.5	7.6
LOS	F	C	C	A
Approach Delay (s/veh)	131.7	21.4		23.2
Approach LOS	F	C		C

Intersection Summary	
Cycle Length: 120	
Actuated Cycle Length: 64.3	
Natural Cycle: 90	
Control Type: Actuated-Uncoordinated	
Maximum v/c Ratio: 1.22	
Intersection Signal Delay (s/veh): 83.2	Intersection LOS: F
Intersection Capacity Utilization 86.3%	ICU Level of Service E
Analysis Period (min) 15	

Splits and Phases: 6: La Sierra Av. & El Sobrante Rd.

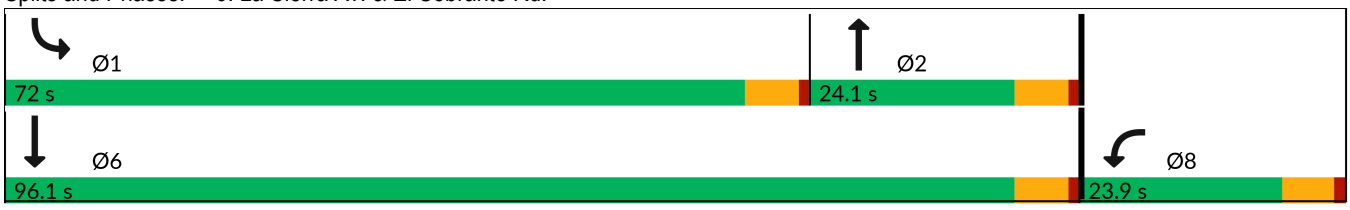



Movement	WBL	WBR	NBT	NBR	SBL	SBT
Lane Configurations						
Traffic Volume (veh/h)	89	668	122	31	311	143
Future Volume (veh/h)	89	668	122	31	311	143
Initial Q (Qb), veh	0	0	0	0	0	0
Lane Width Adj.	1.00	1.00	1.00	1.00	1.00	1.00
Ped-Bike Adj(A_pbT)	1.00	1.00		1.00	1.00	
Parking Bus, Adj	1.00	1.00	1.00	1.00	1.00	1.00
Work Zone On Approach	No		No			No
Adj Sat Flow, veh/h/ln	1870	1870	1870	1870	1870	1870
Adj Flow Rate, veh/h	94	403	128	28	327	151
Peak Hour Factor	0.95	0.95	0.95	0.95	0.95	0.95
Percent Heavy Veh, %	2	2	2	2	2	2
Cap, veh/h	96	412	464	99	399	906
Arrive On Green	0.31	0.31	0.16	0.16	0.22	0.48
Sat Flow, veh/h	306	1310	3008	621	1781	1870
Grp Volume(v), veh/h	498	0	77	79	327	151
Grp Sat Flow(s),veh/h/ln	1619	0	1777	1759	1781	1870
Q Serve(g_s), s	17.5	0.0	2.2	2.3	10.0	2.6
Cycle Q Clear(g_c), s	17.5	0.0	2.2	2.3	10.0	2.6
Prop In Lane	0.19	0.81		0.35	1.00	
Lane Grp Cap(c), veh/h	509	0	283	280	399	906
V/C Ratio(X)	0.98	0.00	0.27	0.28	0.82	0.17
Avail Cap(c_a), veh/h	509	0	565	559	2048	2933
HCM Platoon Ratio	1.00	1.00	1.00	1.00	1.00	1.00
Upstream Filter(I)	1.00	0.00	1.00	1.00	1.00	1.00
Uniform Delay (d), s/veh	19.5	0.0	21.3	21.3	21.2	8.3
Incr Delay (d2), s/veh	34.2	0.0	0.5	0.5	4.2	0.1
Initial Q Delay(d3), s/veh	0.0	0.0	0.0	0.0	0.0	0.0
%ile BackOfQ(50%),veh/ln	10.2	0.0	0.8	0.8	3.8	0.7
Unsig. Movement Delay, s/veh						
LnGrp Delay(d), s/veh	53.8	0.0	21.8	21.9	25.4	8.4
LnGrp LOS	D		C	C	C	A
Approach Vol, veh/h	498		156			478
Approach Delay, s/veh	53.8		21.8			20.1
Approach LOS	D		C			C

Timer - Assigned Phs	1	2				6	8
Phs Duration (G+Y+Rc), s	18.7	15.0				33.7	23.9
Change Period (Y+Rc), s	5.8	5.8				5.8	5.8
Max Green Setting (Gmax), s	66.2	18.3				90.3	18.1
Max Q Clear Time (g_c+I1), s	12.0	4.3				4.6	19.5
Green Ext Time (p_c), s	0.9	0.5				0.7	0.0

Intersection Summary	
HCM 7th Control Delay, s/veh	35.1
HCM 7th LOS	D

Lane Group	EBL	EBT	WBT	SBL
Lane Configurations				
Traffic Volume (vph)	55	307	674	63
Future Volume (vph)	55	307	674	63
Turn Type	Prot	NA	NA	Prot
Protected Phases	7	4	8	6
Permitted Phases				
Detector Phase	7	4	8	6
Switch Phase				
Minimum Initial (s)	5.0	10.0	10.0	5.0
Minimum Split (s)	10.8	23.8	23.8	23.8
Total Split (s)	20.0	83.0	63.0	37.0
Total Split (%)	16.7%	69.2%	52.5%	30.8%
Yellow Time (s)	3.6	4.8	4.8	3.6
All-Red Time (s)	1.0	1.0	1.0	1.0
Lost Time Adjust (s)	0.0	0.0	0.0	0.0
Total Lost Time (s)	4.6	5.8	5.8	4.6
Lead/Lag	Lead		Lag	
Lead-Lag Optimize?	Yes		Yes	
Recall Mode	None	None	None	None
Act Effct Green (s)	7.7	29.3	23.6	9.7
Actuated g/C Ratio	0.18	0.67	0.54	0.22
v/c Ratio	0.18	0.26	0.45	0.36
Control Delay (s/veh)	24.4	5.8	11.8	16.4
Queue Delay	0.0	0.0	0.0	0.0
Total Delay (s/veh)	24.4	5.8	11.8	16.4
LOS	C	A	B	B
Approach Delay (s/veh)		8.6	11.8	16.4
Approach LOS		A	B	B

Intersection Summary	
Cycle Length: 120	
Actuated Cycle Length: 44	
Natural Cycle: 60	
Control Type: Actuated-Uncoordinated	
Maximum v/c Ratio: 0.45	
Intersection Signal Delay (s/veh): 11.4	Intersection LOS: B
Intersection Capacity Utilization 47.8%	ICU Level of Service A
Analysis Period (min) 15	

Splits and Phases: 7: El Sobrante Rd. & McAllister St.

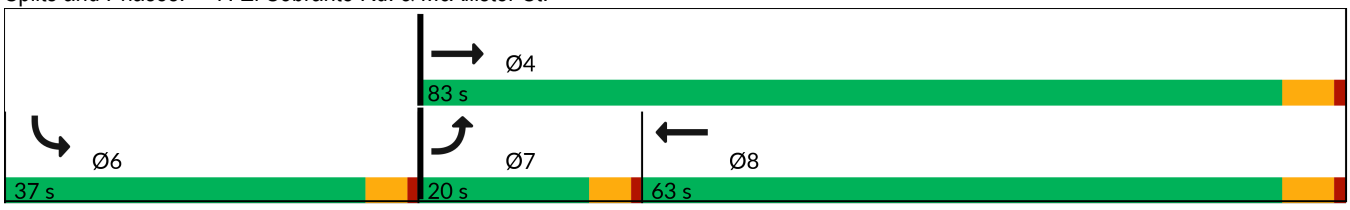

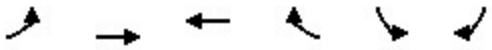

Movement	EBL	EBT	WBT	WBR	SBL	SBR
Lane Configurations						
Traffic Volume (veh/h)	55	307	674	129	63	79
Future Volume (veh/h)	55	307	674	129	63	79
Initial Q (Qb), veh	0	0	0	0	0	0
Lane Width Adj.	1.00	1.00	1.00	1.00	1.00	1.00
Ped-Bike Adj(A_pbT)	1.00			1.00	1.00	1.00
Parking Bus, Adj	1.00	1.00	1.00	1.00	1.00	1.00
Work Zone On Approach		No	No		No	
Adj Sat Flow, veh/h/ln	1870	1870	1870	1870	1870	1870
Adj Flow Rate, veh/h	57	320	702	134	66	82
Peak Hour Factor	0.96	0.96	0.96	0.96	0.96	0.96
Percent Heavy Veh, %	2	2	2	2	2	2
Cap, veh/h	108	1104	1188	227	85	105
Arrive On Green	0.06	0.59	0.40	0.40	0.11	0.11
Sat Flow, veh/h	1781	1870	3071	568	739	918
Grp Volume(v), veh/h	57	320	419	417	149	0
Grp Sat Flow(s),veh/h/ln	1781	1870	1777	1768	1668	0
Q Serve(g_s), s	1.1	3.0	6.5	6.5	3.1	0.0
Cycle Q Clear(g_c), s	1.1	3.0	6.5	6.5	3.1	0.0
Prop In Lane	1.00			0.32	0.44	0.55
Lane Grp Cap(c), veh/h	108	1104	709	706	191	0
V/C Ratio(X)	0.53	0.29	0.59	0.59	0.78	0.00
Avail Cap(c_a), veh/h	778	4097	2884	2870	1533	0
HCM Platoon Ratio	1.00	1.00	1.00	1.00	1.00	1.00
Upstream Filter(I)	1.00	1.00	1.00	1.00	1.00	0.00
Uniform Delay (d), s/veh	16.1	3.6	8.3	8.3	15.2	0.0
Incr Delay (d2), s/veh	1.5	0.1	0.8	0.8	2.6	0.0
Initial Q Delay(d3), s/veh	0.0	0.0	0.0	0.0	0.0	0.0
%ile BackOfQ(50%),veh/ln	0.4	0.2	1.4	1.4	1.0	0.0
Unsig. Movement Delay, s/veh						
LnGrp Delay(d), s/veh	17.5	3.7	9.1	9.1	17.8	0.0
LnGrp LOS	B	A	A	A	B	
Approach Vol, veh/h		377	836		149	
Approach Delay, s/veh		5.8	9.1		17.8	
Approach LOS		A	A		B	

Timer - Assigned Phs			4		6	7	8
Phs Duration (G+Y+Rc), s			26.6		8.6	6.7	19.9
Change Period (Y+Rc), s			5.8		4.6	4.6	5.8
Max Green Setting (Gmax), s			77.2		32.4	15.4	57.2
Max Q Clear Time (g_c+I1), s			5.0		5.1	3.1	8.5
Green Ext Time (p_c), s			1.8		0.2	0.0	5.5

Intersection Summary		
HCM 7th Control Delay, s/veh		9.1
HCM 7th LOS		A

Lane Group	WBL	NBT	SBL	SBT
Lane Configurations				
Traffic Volume (vph)	96	249	873	534
Future Volume (vph)	96	249	873	534
Turn Type	Prot	NA	Prot	NA
Protected Phases	8	2	1	6
Permitted Phases				
Detector Phase	8	2	1	6
Switch Phase				
Minimum Initial (s)	5.0	10.0	5.0	10.0
Minimum Split (s)	23.8	23.8	10.8	23.8
Total Split (s)	32.0	25.0	63.0	88.0
Total Split (%)	26.7%	20.8%	52.5%	73.3%
Yellow Time (s)	3.6	4.8	3.6	4.8
All-Red Time (s)	1.0	1.0	1.0	1.0
Lost Time Adjust (s)	0.0	0.0	0.0	0.0
Total Lost Time (s)	4.6	5.8	4.6	5.8
Lead/Lag		Lag	Lead	
Lead-Lag Optimize?		Yes	Yes	
Recall Mode	None	None	None	None
Act Effct Green (s)	27.4	16.5	58.5	79.6
Actuated g/C Ratio	0.23	0.14	0.50	0.68
v/c Ratio	1.12	0.76	1.07	0.45
Control Delay (s/veh)	105.3	51.3	79.5	10.2
Queue Delay	0.0	0.0	0.0	0.0
Total Delay (s/veh)	105.3	51.3	79.5	10.2
LOS	F	D	E	B
Approach Delay (s/veh)	105.3	51.3		53.2
Approach LOS	F	D		D

Intersection Summary	
Cycle Length: 120	
Actuated Cycle Length: 117.4	
Natural Cycle: 120	
Control Type: Actuated-Uncoordinated	
Maximum v/c Ratio: 1.12	
Intersection Signal Delay (s/veh): 65.1	Intersection LOS: E
Intersection Capacity Utilization 104.5%	ICU Level of Service G
Analysis Period (min) 15	

Splits and Phases: 6: La Sierra Av. & El Sobrante Rd.

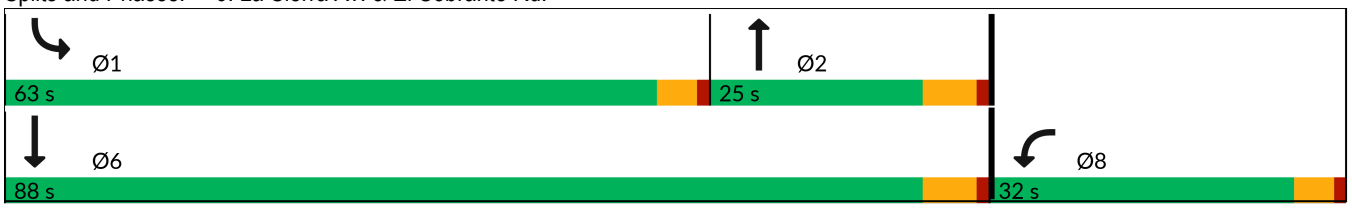



Movement	WBL	WBR	NBT	NBR	SBL	SBT
Lane Configurations						
Traffic Volume (veh/h)	96	447	249	120	873	534
Future Volume (veh/h)	96	447	249	120	873	534
Initial Q (Qb), veh	0	0	0	0	0	0
Lane Width Adj.	1.00	1.00	1.00	1.00	1.00	1.00
Ped-Bike Adj(A_pbT)	1.00	1.00		1.00	1.00	
Parking Bus, Adj	1.00	1.00	1.00	1.00	1.00	1.00
Work Zone On Approach	No		No			No
Adj Sat Flow, veh/h/ln	1870	1870	1870	1870	1870	1870
Adj Flow Rate, veh/h	103	271	268	91	939	574
Peak Hour Factor	0.93	0.93	0.93	0.93	0.93	0.93
Percent Heavy Veh, %	2	2	2	2	2	2
Cap, veh/h	107	281	332	110	901	1258
Arrive On Green	0.24	0.24	0.13	0.13	0.51	0.67
Sat Flow, veh/h	449	1182	2714	870	1781	1870
Grp Volume(v), veh/h	375	0	180	179	939	574
Grp Sat Flow(s),veh/h/ln	1635	0	1777	1714	1781	1870
Q Serve(g_s), s	26.2	0.0	11.3	11.8	58.4	16.7
Cycle Q Clear(g_c), s	26.2	0.0	11.3	11.8	58.4	16.7
Prop In Lane	0.27	0.72		0.51	1.00	
Lane Grp Cap(c), veh/h	388	0	225	217	901	1258
V/C Ratio(X)	0.97	0.00	0.80	0.83	1.04	0.46
Avail Cap(c_a), veh/h	388	0	296	285	901	1332
HCM Platoon Ratio	1.00	1.00	1.00	1.00	1.00	1.00
Upstream Filter(I)	1.00	0.00	1.00	1.00	1.00	1.00
Uniform Delay (d), s/veh	43.5	0.0	49.0	49.2	28.5	8.9
Incr Delay (d2), s/veh	36.4	0.0	11.0	14.1	41.4	0.3
Initial Q Delay(d3), s/veh	0.0	0.0	0.0	0.0	0.0	0.0
%ile BackOfQ(50%),veh/ln	14.1	0.0	5.5	5.6	31.9	5.5
Unsig. Movement Delay, s/veh						
LnGrp Delay(d), s/veh	80.0	0.0	59.9	63.2	69.9	9.2
LnGrp LOS	E		E	E	F	A
Approach Vol, veh/h	375		359			1513
Approach Delay, s/veh	80.0		61.6			46.8
Approach LOS	E		E			D

Timer - Assigned Phs	1	2				6	8
Phs Duration (G+Y+Rc), s	63.0	20.4				83.4	32.0
Change Period (Y+Rc), s	4.6	5.8				5.8	4.6
Max Green Setting (Gmax), s	58.4	19.2				82.2	27.4
Max Q Clear Time (g_c+I1), s	60.4	13.8				18.7	28.2
Green Ext Time (p_c), s	0.0	0.8				3.5	0.0

Intersection Summary	
HCM 7th Control Delay, s/veh	54.7
HCM 7th LOS	D

Lane Group	EBL	EBT	WBT	SBL
Lane Configurations				
Traffic Volume (vph)	68	927	440	71
Future Volume (vph)	68	927	440	71
Turn Type	Prot	NA	NA	Prot
Protected Phases	7	4	8	6
Permitted Phases				
Detector Phase	7	4	8	6
Switch Phase				
Minimum Initial (s)	5.0	10.0	10.0	5.0
Minimum Split (s)	10.8	23.8	23.8	23.8
Total Split (s)	16.0	92.0	76.0	28.0
Total Split (%)	13.3%	76.7%	63.3%	23.3%
Yellow Time (s)	3.6	4.8	4.8	3.6
All-Red Time (s)	1.0	1.0	1.0	1.0
Lost Time Adjust (s)	0.0	0.0	0.0	0.0
Total Lost Time (s)	4.6	5.8	5.8	4.6
Lead/Lag	Lead		Lag	
Lead-Lag Optimize?	Yes		Yes	
Recall Mode	None	None	None	None
Act Effct Green (s)	7.9	41.7	31.9	11.2
Actuated g/C Ratio	0.12	0.64	0.49	0.17
v/c Ratio	0.33	0.82	0.30	0.59
Control Delay (s/veh)	37.8	15.3	10.7	28.6
Queue Delay	0.0	0.0	0.0	0.0
Total Delay (s/veh)	37.8	15.3	10.7	28.6
LOS	D	B	B	C
Approach Delay (s/veh)		16.8	10.7	28.6
Approach LOS		B	B	C

Intersection Summary	
Cycle Length: 120	
Actuated Cycle Length: 64.7	
Natural Cycle: 75	
Control Type: Actuated-Uncoordinated	
Maximum v/c Ratio: 0.82	
Intersection Signal Delay (s/veh): 16.4	Intersection LOS: B
Intersection Capacity Utilization 68.6%	ICU Level of Service C
Analysis Period (min) 15	

Splits and Phases: 7: El Sobrante Rd. & McAllister St.

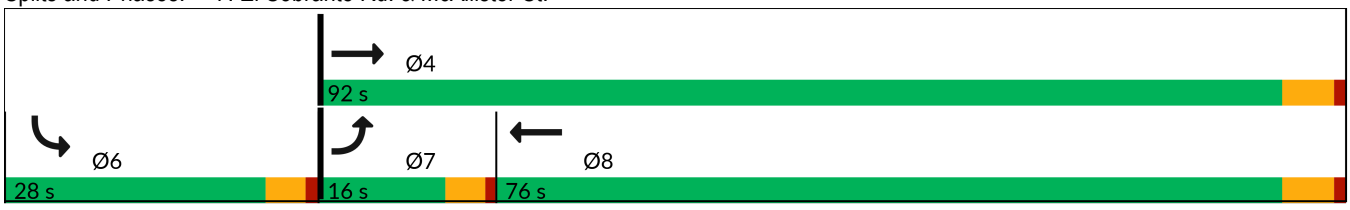

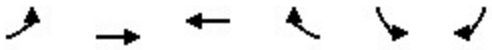

Movement	EBL	EBT	WBT	WBR	SBL	SBR
Lane Configurations						
Traffic Volume (veh/h)	68	927	440	52	71	118
Future Volume (veh/h)	68	927	440	52	71	118
Initial Q (Qb), veh	0	0	0	0	0	0
Lane Width Adj.	1.00	1.00	1.00	1.00	1.00	1.00
Ped-Bike Adj(A_pbT)	1.00			1.00	1.00	1.00
Parking Bus, Adj	1.00	1.00	1.00	1.00	1.00	1.00
Work Zone On Approach		No	No		No	
Adj Sat Flow, veh/h/ln	1870	1870	1870	1870	1870	1870
Adj Flow Rate, veh/h	72	986	468	55	76	126
Peak Hour Factor	0.94	0.94	0.94	0.94	0.94	0.94
Percent Heavy Veh, %	2	2	2	2	2	2
Cap, veh/h	113	1191	1540	180	95	158
Arrive On Green	0.06	0.64	0.48	0.48	0.15	0.15
Sat Flow, veh/h	1781	1870	3298	375	619	1027
Grp Volume(v), veh/h	72	986	259	264	203	0
Grp Sat Flow(s),veh/h/ln	1781	1870	1777	1803	1655	0
Q Serve(g_s), s	2.0	20.1	4.4	4.4	5.9	0.0
Cycle Q Clear(g_c), s	2.0	20.1	4.4	4.4	5.9	0.0
Prop In Lane	1.00			0.21	0.37	0.62
Lane Grp Cap(c), veh/h	113	1191	854	867	254	0
V/C Ratio(X)	0.64	0.83	0.30	0.31	0.80	0.00
Avail Cap(c_a), veh/h	409	3248	2513	2549	780	0
HCM Platoon Ratio	1.00	1.00	1.00	1.00	1.00	1.00
Upstream Filter(I)	1.00	1.00	1.00	1.00	1.00	0.00
Uniform Delay (d), s/veh	22.7	6.9	7.8	7.8	20.3	0.0
Incr Delay (d2), s/veh	2.2	1.5	0.2	0.2	2.2	0.0
Initial Q Delay(d3), s/veh	0.0	0.0	0.0	0.0	0.0	0.0
%ile BackOfQ(50%),veh/ln	0.8	3.5	1.1	1.2	2.0	0.0
Unsig. Movement Delay, s/veh						
LnGrp Delay(d), s/veh	24.9	8.5	8.0	8.0	22.5	0.0
LnGrp LOS	C	A	A	A	C	
Approach Vol, veh/h		1058	523		203	
Approach Delay, s/veh		9.6	8.0		22.5	
Approach LOS		A	A		C	

Timer - Assigned Phs	4	6	7	8
Phs Duration (G+Y+Rc), s	37.4	12.2	7.7	29.7
Change Period (Y+Rc), s	5.8	4.6	4.6	5.8
Max Green Setting (Gmax), s	86.2	23.4	11.4	70.2
Max Q Clear Time (g_c+I1), s	22.1	7.9	4.0	6.4
Green Ext Time (p_c), s	9.5	0.3	0.0	3.1

Intersection Summary	
HCM 7th Control Delay, s/veh	10.6
HCM 7th LOS	B

APPENDIX 6.1: EAPC (2030) CONDITIONS INTERSECTION OPERATIONS ANALYSIS WORKSHEETS

This Page Intentionally Left Blank

Lane Group	WBL	WBT	WBR	NBL	NBT	SBT	SBR
Lane Configurations							
Traffic Volume (vph)	339	0	577	761	1604	1145	202
Future Volume (vph)	339	0	577	761	1604	1145	202
Turn Type	Split	NA	Perm	Prot	NA	NA	Perm
Protected Phases	8	8		5	2	6	
Permitted Phases			8				6
Detector Phase	8	8	8	5	2	6	6
Switch Phase							
Minimum Initial (s)	5.0	5.0	5.0	5.0	5.0	5.0	5.0
Minimum Split (s)	10.0	10.0	10.0	9.0	26.5	29.5	29.5
Total Split (s)	37.0	37.0	37.0	30.0	63.0	33.0	33.0
Total Split (%)	37.0%	37.0%	37.0%	30.0%	63.0%	33.0%	33.0%
Yellow Time (s)	4.0	4.0	4.0	3.0	4.5	4.5	4.5
All-Red Time (s)	1.0	1.0	1.0	1.0	1.0	1.0	1.0
Lost Time Adjust (s)	0.0	0.0	0.0	0.0	0.0	0.0	0.0
Total Lost Time (s)	5.0	5.0	5.0	4.0	5.5	5.5	5.5
Lead/Lag				Lead		Lag	Lag
Lead-Lag Optimize?				Yes		Yes	Yes
Recall Mode	None	None	None	None	C-Min	C-Min	C-Min
Act Effct Green (s)	24.7	24.7	24.7	25.9	64.8	34.9	34.9
Actuated g/C Ratio	0.25	0.25	0.25	0.26	0.65	0.35	0.35
v/c Ratio	0.76	0.76	0.74	0.88	0.50	0.67	0.33
Control Delay (s/veh)	46.8	37.9	36.4	42.6	19.2	31.7	9.8
Queue Delay	0.0	0.0	0.0	0.0	1.0	0.0	0.0
Total Delay (s/veh)	46.8	37.9	36.4	42.6	20.2	31.7	9.8
LOS	D	D	D	D	C	C	A
Approach Delay (s/veh)		40.4			27.4	28.4	
Approach LOS		D			C	C	

Intersection Summary	
Cycle Length: 100	
Actuated Cycle Length: 100	
Offset: 0 (0%), Referenced to phase 2:NBT and 6:SBT, Start of Yellow, Master Intersection	
Natural Cycle: 70	
Control Type: Actuated-Coordinated	
Maximum v/c Ratio: 0.88	
Intersection Signal Delay (s/veh): 30.3	Intersection LOS: C
Intersection Capacity Utilization 79.1%	ICU Level of Service D
Analysis Period (min) 15	

Splits and Phases: 1: La Sierra Av. & SR-91 WB Ramps



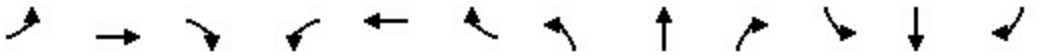

Movement	EBL	EBT	EBR	WBL	WBT	WBR	NBL	NBT	NBR	SBL	SBT	SBR
Lane Configurations												
Traffic Volume (veh/h)	0	0	0	339	0	577	761	1604	0	0	1145	202
Future Volume (veh/h)	0	0	0	339	0	577	761	1604	0	0	1145	202
Initial Q (Qb), veh				0	0	0	0	0	0	0	0	0
Lane Width Adj.				1.00	1.00	1.00	1.00	1.00	1.00	1.00	1.00	1.00
Ped-Bike Adj(A_pbT)				1.00		1.00	1.00		1.00	1.00		0.98
Parking Bus, Adj				1.00	1.00	1.00	1.00	1.00	1.00	1.00	1.00	1.00
Work Zone On Approach					No			No			No	
Adj Sat Flow, veh/h/ln				1856	1900	1885	1870	1870	0	0	1856	1826
Adj Flow Rate, veh/h				491	0	269	785	1654	0	0	1180	165
Peak Hour Factor				0.97	0.97	0.97	0.97	0.97	0.97	0.97	0.97	0.97
Percent Heavy Veh, %				3	0	1	2	2	0	0	3	5
Cap, veh/h				706	0	319	833	3550	0	0	2099	630
Arrive On Green				0.20	0.00	0.20	0.48	1.00	0.00	0.00	0.41	0.41
Sat Flow, veh/h				3534	0	1598	3456	5274	0	0	5233	1521
Grp Volume(v), veh/h				491	0	269	785	1654	0	0	1180	165
Grp Sat Flow(s),veh/h/ln				1767	0	1598	1728	1702	0	0	1689	1521
Q Serve(g_s), s				12.9	0.0	16.2	21.6	0.0	0.0	0.0	17.8	7.1
Cycle Q Clear(g_c), s				12.9	0.0	16.2	21.6	0.0	0.0	0.0	17.8	7.1
Prop In Lane				1.00		1.00	1.00		0.00	0.00		1.00
Lane Grp Cap(c), veh/h				706	0	319	833	3550	0	0	2099	630
V/C Ratio(X)				0.70	0.00	0.84	0.94	0.47	0.00	0.00	0.56	0.26
Avail Cap(c_a), veh/h				1131	0	511	898	3550	0	0	2099	630
HCM Platoon Ratio				1.00	1.00	1.00	2.00	2.00	1.00	1.00	1.00	1.00
Upstream Filter(I)				1.00	0.00	1.00	0.43	0.43	0.00	0.00	1.00	1.00
Uniform Delay (d), s/veh				37.2	0.0	38.5	25.2	0.0	0.0	0.0	22.4	19.2
Incr Delay (d2), s/veh				0.9	0.0	5.7	8.7	0.2	0.0	0.0	1.1	1.0
Initial Q Delay(d3), s/veh				0.0	0.0	0.0	0.0	0.0	0.0	0.0	0.0	0.0
%ile BackOfQ(50%),veh/ln				5.4	0.0	6.5	6.6	0.1	0.0	0.0	6.7	2.5
Unsig. Movement Delay, s/veh												
LnGrp Delay(d), s/veh				38.1	0.0	44.2	34.0	0.2	0.0	0.0	23.5	20.3
LnGrp LOS				D		D	C	A			C	C
Approach Vol, veh/h					760			2439			1345	
Approach Delay, s/veh					40.3			11.1			23.1	
Approach LOS					D			B			C	

Timer - Assigned Phs	2		5	6		8						
Phs Duration (G+Y+Rc), s	75.0		28.1	46.9		25.0						
Change Period (Y+Rc), s	5.5		4.0	5.5		5.0						
Max Green Setting (Gmax), s	57.5		26.0	27.5		32.0						
Max Q Clear Time (g_c+I1), s	2.0		23.6	19.8		18.2						
Green Ext Time (p_c), s	17.5		0.5	4.6		1.8						

Intersection Summary		
HCM 7th Control Delay, s/veh	19.5	
HCM 7th LOS	B	

Notes
User approved volume balancing among the lanes for turning movement.

Lane Group	EBL	EBT	EBR	NBT	NBR	SBL	SBT
Lane Configurations							
Traffic Volume (vph)	520	1	478	1791	585	392	1087
Future Volume (vph)	520	1	478	1791	585	392	1087
Turn Type	Split	NA	Perm	NA	Perm	Prot	NA
Protected Phases	4	4		2		1	6
Permitted Phases			4		2		
Detector Phase	4	4	4	2	2	1	6
Switch Phase							
Minimum Initial (s)	5.0	5.0	5.0	5.0	5.0	5.0	5.0
Minimum Split (s)	10.0	10.0	10.0	29.5	29.5	9.0	26.5
Total Split (s)	37.0	37.0	37.0	45.0	45.0	18.0	63.0
Total Split (%)	37.0%	37.0%	37.0%	45.0%	45.0%	18.0%	63.0%
Yellow Time (s)	4.0	4.0	4.0	4.5	4.5	3.0	4.5
All-Red Time (s)	1.0	1.0	1.0	1.0	1.0	1.0	1.0
Lost Time Adjust (s)	0.0	0.0	0.0	0.0	0.0	0.0	0.0
Total Lost Time (s)	5.0	5.0	5.0	5.5	5.5	4.0	5.5
Lead/Lag				Lag	Lag	Lead	
Lead-Lag Optimize?				Yes	Yes	Yes	
Recall Mode	None	None	None	C-Min	C-Min	None	C-Min
Act Effct Green (s)	26.8	26.8	26.8	43.8	43.8	14.9	62.7
Actuated g/C Ratio	0.27	0.27	0.27	0.44	0.44	0.15	0.63
v/c Ratio	0.80	0.79	0.74	0.85	0.60	0.81	0.36
Control Delay (s/veh)	47.2	42.0	35.4	30.9	4.5	63.6	3.1
Queue Delay	0.4	0.4	0.0	0.0	0.0	0.0	0.0
Total Delay (s/veh)	47.6	42.4	35.4	30.9	4.5	63.6	3.1
LOS	D	D	D	C	A	E	A
Approach Delay (s/veh)		42.0		24.4			19.2
Approach LOS		D		C			B

Intersection Summary	
Cycle Length: 100	
Actuated Cycle Length: 100	
Offset: 28 (28%), Referenced to phase 2:NBT and 6:SBT, Start of Yellow	
Natural Cycle: 70	
Control Type: Actuated-Coordinated	
Maximum v/c Ratio: 0.85	
Intersection Signal Delay (s/veh): 26.4	Intersection LOS: C
Intersection Capacity Utilization 79.1%	ICU Level of Service D
Analysis Period (min) 15	

Splits and Phases: 2: La Sierra Av. & SR-91 EB Ramps



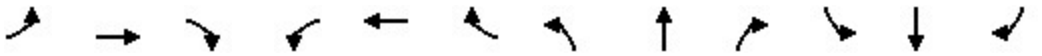

Movement	EBL	EBT	EBR	WBL	WBT	WBR	NBL	NBT	NBR	SBL	SBT	SBR
Lane Configurations												
Traffic Volume (veh/h)	520	1	478	0	0	0	0	1791	585	392	1087	0
Future Volume (veh/h)	520	1	478	0	0	0	0	1791	585	392	1087	0
Initial Q (Qb), veh	0	0	0				0	0	0	0	0	0
Lane Width Adj.	1.00	1.00	1.00				1.00	1.00	1.00	1.00	1.00	1.00
Ped-Bike Adj(A_pbT)	1.00		1.00				1.00		1.00	1.00		1.00
Parking Bus, Adj	1.00	1.00	1.00				1.00	1.00	1.00	1.00	1.00	1.00
Work Zone On Approach		No						No			No	
Adj Sat Flow, veh/h/ln	1885	1900	1811				0	1856	1856	1841	1856	0
Adj Flow Rate, veh/h	627	0	181				0	1866	457	408	1132	0
Peak Hour Factor	0.96	0.96	0.96				0.96	0.96	0.96	0.96	0.96	0.96
Percent Heavy Veh, %	1	0	6				0	3	3	4	3	0
Cap, veh/h	742	0	317				0	2582	800	471	3486	0
Arrive On Green	0.21	0.00	0.21				0.00	0.51	0.51	0.09	0.46	0.00
Sat Flow, veh/h	3591	0	1535				0	5233	1570	3401	5233	0
Grp Volume(v), veh/h	627	0	181				0	1866	457	408	1132	0
Grp Sat Flow(s),veh/h/ln	1795	0	1535				0	1689	1570	1700	1689	0
Q Serve(g_s), s	16.8	0.0	10.6				0.0	28.6	20.1	11.8	14.2	0.0
Cycle Q Clear(g_c), s	16.8	0.0	10.6				0.0	28.6	20.1	11.8	14.2	0.0
Prop In Lane	1.00		1.00				0.00		1.00	1.00		0.00
Lane Grp Cap(c), veh/h	742	0	317				0	2582	800	471	3486	0
V/C Ratio(X)	0.84	0.00	0.57				0.00	0.72	0.57	0.87	0.32	0.00
Avail Cap(c_a), veh/h	1149	0	491				0	2582	800	476	3486	0
HCM Platoon Ratio	1.00	1.00	1.00				1.00	1.00	1.00	0.67	0.67	1.00
Upstream Filter(I)	1.00	0.00	1.00				0.00	0.22	0.22	0.66	0.66	0.00
Uniform Delay (d), s/veh	38.1	0.0	35.7				0.0	19.0	17.0	44.4	12.2	0.0
Incr Delay (d2), s/veh	3.0	0.0	1.2				0.0	0.4	0.7	10.5	0.2	0.0
Initial Q Delay(d3), s/veh	0.0	0.0	0.0				0.0	0.0	0.0	0.0	0.0	0.0
%ile BackOfQ(50%),veh/ln	7.3	0.0	3.9				0.0	10.0	6.6	5.7	5.5	0.0
Unsig. Movement Delay, s/veh												
LnGrp Delay(d), s/veh	41.1	0.0	36.9				0.0	19.4	17.6	55.0	12.4	0.0
LnGrp LOS	D		D					B	B	D	B	
Approach Vol, veh/h		808						2323			1540	
Approach Delay, s/veh		40.2						19.1			23.7	
Approach LOS		D						B			C	

Timer - Assigned Phs	1	2		4		6
Phs Duration (G+Y+Rc), s	17.9	56.5		25.7		74.3
Change Period (Y+Rc), s	4.0	5.5		5.0		5.5
Max Green Setting (Gmax), s	14.0	39.5		32.0		57.5
Max Q Clear Time (g_c+I1), s	13.8	30.6		18.8		16.2
Green Ext Time (p_c), s	0.0	7.4		1.9		9.2

Intersection Summary		
HCM 7th Control Delay, s/veh		24.2
HCM 7th LOS		C

Notes

User approved volume balancing among the lanes for turning movement.

Lane Group	EBL	EBT	EBR	WBL	WBT	WBR	NBL	NBT	NBR	SBL	SBT	SBR
Lane Configurations												
Traffic Volume (vph)	496	225	171	119	236	289	405	1756	198	150	1095	503
Future Volume (vph)	496	225	171	119	236	289	405	1756	198	150	1095	503
Turn Type	Prot	NA	Perm	Prot	NA	Perm	Prot	NA	Perm	Prot	NA	Perm
Protected Phases	7	4		3	8		5	2		1	6	
Permitted Phases			4			8			2			6
Detector Phase	7	4	4	3	8	8	5	2	2	1	6	6
Switch Phase												
Minimum Initial (s)	5.0	10.0	10.0	5.0	10.0	10.0	5.0	10.0	10.0	5.0	10.0	10.0
Minimum Split (s)	9.6	43.4	43.4	9.6	43.4	43.4	9.6	37.8	37.8	9.6	32.8	32.8
Total Split (s)	22.3	53.7	53.7	12.0	43.4	43.4	18.2	44.0	44.0	10.3	36.1	36.1
Total Split (%)	18.6%	44.8%	44.8%	10.0%	36.2%	36.2%	15.2%	36.7%	36.7%	8.6%	30.1%	30.1%
Yellow Time (s)	3.6	4.4	4.4	3.6	4.4	4.4	3.6	4.8	4.8	3.6	4.8	4.8
All-Red Time (s)	1.0	1.0	1.0	1.0	1.0	1.0	1.0	1.0	1.0	1.0	1.0	1.0
Lost Time Adjust (s)	0.0	0.0	0.0	0.0	0.0	0.0	0.0	0.0	0.0	0.0	0.0	0.0
Total Lost Time (s)	4.6	5.4	5.4	4.6	5.4	5.4	4.6	5.8	5.8	4.6	5.8	5.8
Lead/Lag	Lead	Lag	Lag	Lead	Lag	Lag	Lead	Lag	Lag	Lead	Lag	Lag
Lead-Lag Optimize?	Yes	Yes	Yes	Yes	Yes	Yes	Yes	Yes	Yes	Yes	Yes	Yes
Recall Mode	None	None	None	None	None	None	None	Min	Min	None	Min	Min
Act Effct Green (s)	17.9	28.6	28.6	7.0	17.8	17.8	13.7	38.6	38.6	5.8	30.6	30.6
Actuated g/C Ratio	0.18	0.28	0.28	0.07	0.18	0.18	0.14	0.38	0.38	0.06	0.30	0.30
v/c Ratio	0.89	0.25	0.32	0.55	0.41	0.73	0.95	0.99	0.31	0.84	0.78	0.69
Control Delay (s/veh)	60.1	27.5	5.1	56.3	37.6	25.0	75.7	50.3	7.6	82.8	37.3	11.2
Queue Delay	0.0	0.0	0.0	0.0	0.0	0.0	0.0	0.0	0.0	0.0	0.0	0.0
Total Delay (s/veh)	60.1	27.5	5.1	56.3	37.6	25.0	75.7	50.3	7.6	82.8	37.3	11.2
LOS	E	C	A	E	D	C	E	D	A	F	D	B
Approach Delay (s/veh)		41.3			35.4			51.0			33.7	
Approach LOS		D			D			D			C	

Intersection Summary	
Cycle Length: 120	
Actuated Cycle Length: 100.6	
Natural Cycle: 115	
Control Type: Actuated-Uncoordinated	
Maximum v/c Ratio: 0.99	
Intersection Signal Delay (s/veh): 42.4	Intersection LOS: D
Intersection Capacity Utilization 80.7%	ICU Level of Service D
Analysis Period (min) 15	

Splits and Phases: 3: La Sierra Av. & Indiana Av./S. Indiana Av.

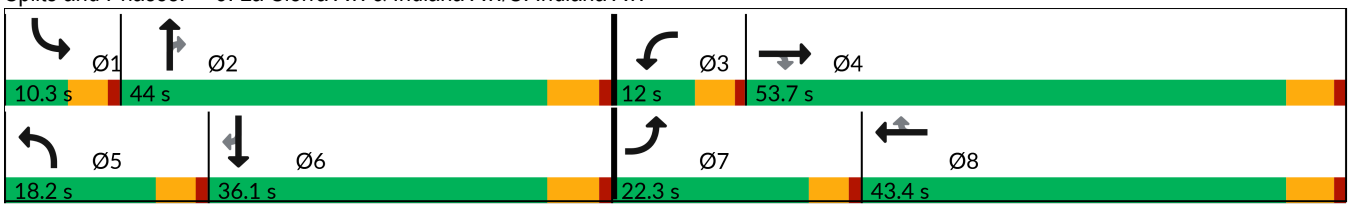

Movement	EBL	EBT	EBR	WBL	WBT	WBR	NBL	NBT	NBR	SBL	SBT	SBR
Lane Configurations												
Traffic Volume (veh/h)	496	225	171	119	236	289	405	1756	198	150	1095	503
Future Volume (veh/h)	496	225	171	119	236	289	405	1756	198	150	1095	503
Initial Q (Qb), veh	0	0	0	0	0	0	0	0	0	0	0	0
Lane Width Adj.	1.00	1.00	1.00	1.00	1.00	1.00	1.00	1.00	1.00	1.00	1.00	1.00
Ped-Bike Adj(A_pbT)	1.00		1.00	1.00		1.00	1.00		1.00	1.00		0.98
Parking Bus, Adj	1.00	1.00	1.00	1.00	1.00	1.00	1.00	1.00	1.00	1.00	1.00	1.00
Work Zone On Approach		No			No			No			No	
Adj Sat Flow, veh/h/ln	1870	1870	1870	1870	1870	1870	1870	1870	1870	1870	1870	1870
Adj Flow Rate, veh/h	545	247	135	131	259	238	445	1930	154	165	1203	328
Peak Hour Factor	0.91	0.91	0.91	0.91	0.91	0.91	0.91	0.91	0.91	0.91	0.91	0.91
Percent Heavy Veh, %	2	2	2	2	2	2	2	2	2	2	2	2
Cap, veh/h	600	1114	496	193	695	308	461	1914	593	193	1518	461
Arrive On Green	0.17	0.31	0.31	0.06	0.20	0.20	0.13	0.37	0.37	0.06	0.30	0.30
Sat Flow, veh/h	3456	3554	1584	3456	3554	1578	3456	5106	1583	3456	5106	1550
Grp Volume(v), veh/h	545	247	135	131	259	238	445	1930	154	165	1203	328
Grp Sat Flow(s),veh/h/ln	1728	1777	1584	1728	1777	1578	1728	1702	1583	1728	1702	1550
Q Serve(g_s), s	15.8	5.2	6.5	3.8	6.4	14.6	13.1	38.2	6.9	4.8	22.1	19.2
Cycle Q Clear(g_c), s	15.8	5.2	6.5	3.8	6.4	14.6	13.1	38.2	6.9	4.8	22.1	19.2
Prop In Lane	1.00		1.00	1.00		1.00	1.00		1.00	1.00		1.00
Lane Grp Cap(c), veh/h	600	1114	496	193	695	308	461	1914	593	193	1518	461
V/C Ratio(X)	0.91	0.22	0.27	0.68	0.37	0.77	0.97	1.01	0.26	0.85	0.79	0.71
Avail Cap(c_a), veh/h	600	1684	750	251	1325	588	461	1914	593	193	1518	461
HCM Platoon Ratio	1.00	1.00	1.00	1.00	1.00	1.00	1.00	1.00	1.00	1.00	1.00	1.00
Upstream Filter(I)	1.00	1.00	1.00	1.00	1.00	1.00	1.00	1.00	1.00	1.00	1.00	1.00
Uniform Delay (d), s/veh	41.3	25.8	26.3	47.2	35.6	38.8	43.9	31.9	22.1	47.7	32.9	31.9
Incr Delay (d2), s/veh	17.4	0.1	0.3	2.4	0.3	4.1	32.7	22.7	0.3	27.9	3.1	5.6
Initial Q Delay(d3), s/veh	0.0	0.0	0.0	0.0	0.0	0.0	0.0	0.0	0.0	0.0	0.0	0.0
%ile BackOfQ(50%),veh/ln	7.9	2.1	2.4	1.7	2.7	5.8	7.4	18.4	2.5	2.8	9.0	7.6
Unsig. Movement Delay, s/veh												
LnGrp Delay(d), s/veh	58.7	25.9	26.6	49.6	35.9	42.9	76.7	54.5	22.4	75.6	36.0	37.5
LnGrp LOS	E	C	C	D	D	D	E	F	C	E	D	D
Approach Vol, veh/h		927			628			2529			1696	
Approach Delay, s/veh		45.3			41.4			56.5			40.2	
Approach LOS		D			D			E			D	

Timer - Assigned Phs	1	2	3	4	5	6	7	8
Phs Duration (G+Y+Rc), s	10.3	44.0	10.3	37.3	18.2	36.1	22.3	25.3
Change Period (Y+Rc), s	4.6	5.8	4.6	5.4	4.6	5.8	4.6	5.4
Max Green Setting (Gmax), s	5.7	38.2	7.4	48.3	13.6	30.3	17.7	38.0
Max Q Clear Time (g_c+I1), s	6.8	40.2	5.8	8.5	15.1	24.1	17.8	16.6
Green Ext Time (p_c), s	0.0	0.0	0.0	2.0	0.0	4.8	0.0	2.3

Intersection Summary	
HCM 7th Control Delay, s/veh	48.3
HCM 7th LOS	D

Lane Group	EBL	EBT	EBR	WBL	WBT	WBR	NBL	NBT	SBL	SBT
Lane Configurations										
Traffic Volume (vph)	57	87	63	86	105	238	46	1403	127	684
Future Volume (vph)	57	87	63	86	105	238	46	1403	127	684
Turn Type	Prot	NA	Perm	Prot	NA	Perm	Prot	NA	Prot	NA
Protected Phases	7	4		3	8		5	2	1	6
Permitted Phases			4			8				
Detector Phase	7	4	4	3	8	8	5	2	1	6
Switch Phase										
Minimum Initial (s)	5.0	10.0	10.0	5.0	10.0	10.0	5.0	10.0	5.0	10.0
Minimum Split (s)	9.6	34.1	34.1	9.6	33.8	33.8	9.6	35.8	9.6	33.8
Total Split (s)	9.9	34.2	34.2	12.0	36.3	36.3	13.4	58.8	15.0	60.4
Total Split (%)	8.3%	28.5%	28.5%	10.0%	30.3%	30.3%	11.2%	49.0%	12.5%	50.3%
Yellow Time (s)	3.6	4.1	4.1	3.6	4.8	4.8	3.6	4.8	3.6	4.8
All-Red Time (s)	1.0	1.0	1.0	1.0	1.0	1.0	1.0	1.0	1.0	1.0
Lost Time Adjust (s)	0.0	0.0	0.0	0.0	0.0	0.0	0.0	0.0	0.0	0.0
Total Lost Time (s)	4.6	5.1	5.1	4.6	5.8	5.8	4.6	5.8	4.6	5.8
Lead/Lag	Lead	Lag	Lag	Lead	Lag	Lag	Lead	Lag	Lead	Lag
Lead-Lag Optimize?	Yes	Yes	Yes	Yes	Yes	Yes	Yes	Yes	Yes	Yes
Recall Mode	None	None	None	None	None	None	None	Min	None	Min
Act Effct Green (s)	5.3	14.8	14.8	7.4	18.3	18.3	7.2	53.2	10.4	58.5
Actuated g/C Ratio	0.05	0.14	0.14	0.07	0.17	0.17	0.07	0.50	0.10	0.55
v/c Ratio	0.38	0.38	0.23	0.79	0.37	0.66	0.44	1.05	0.82	0.42
Control Delay (s/veh)	57.4	44.8	3.8	89.2	42.7	25.0	60.6	64.4	82.8	16.3
Queue Delay	0.0	0.0	0.0	0.0	0.0	0.0	0.0	0.0	0.0	0.0
Total Delay (s/veh)	57.4	44.8	3.8	89.2	42.7	25.0	60.6	64.4	82.8	16.3
LOS	E	D	A	F	D	C	E	E	F	B
Approach Delay (s/veh)		35.8			42.2			64.3		26.3
Approach LOS		D			D			E		C

Intersection Summary	
Cycle Length: 120	
Actuated Cycle Length: 106.1	
Natural Cycle: 120	
Control Type: Actuated-Uncoordinated	
Maximum v/c Ratio: 1.05	
Intersection Signal Delay (s/veh): 49.3	Intersection LOS: D
Intersection Capacity Utilization 80.2%	ICU Level of Service D
Analysis Period (min) 15	

Splits and Phases: 4: La Sierra Av. & Victoria Av.

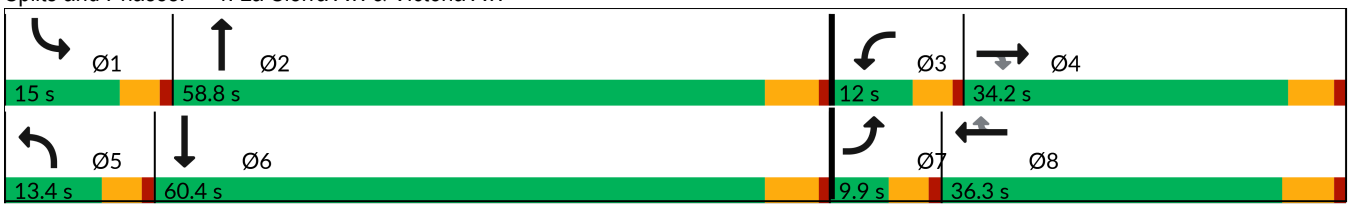

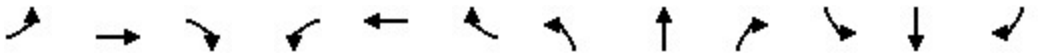

Movement	EBL	EBT	EBR	WBL	WBT	WBR	NBL	NBT	NBR	SBL	SBT	SBR
Lane Configurations												
Traffic Volume (veh/h)	57	87	63	86	105	238	46	1403	236	127	684	34
Future Volume (veh/h)	57	87	63	86	105	238	46	1403	236	127	684	34
Initial Q (Qb), veh	0	0	0	0	0	0	0	0	0	0	0	0
Lane Width Adj.	1.00	1.00	1.00	1.00	1.00	1.00	1.00	1.00	1.00	1.00	1.00	1.00
Ped-Bike Adj(A_pbT)	1.00		0.99	1.00		0.98	1.00		1.00	1.00		1.00
Parking Bus, Adj	1.00	1.00	1.00	1.00	1.00	1.00	1.00	1.00	1.00	1.00	1.00	1.00
Work Zone On Approach		No			No			No			No	
Adj Sat Flow, veh/h/ln	1870	1870	1870	1870	1870	1870	1870	1870	1870	1870	1870	1870
Adj Flow Rate, veh/h	64	98	26	97	118	149	52	1576	203	143	769	21
Peak Hour Factor	0.89	0.89	0.89	0.89	0.89	0.89	0.89	0.89	0.89	0.89	0.89	0.89
Percent Heavy Veh, %	2	2	2	2	2	2	2	2	2	2	2	2
Cap, veh/h	142	204	170	122	255	211	67	1652	210	173	2049	56
Arrive On Green	0.04	0.11	0.11	0.07	0.14	0.14	0.04	0.52	0.52	0.10	0.58	0.58
Sat Flow, veh/h	3456	1870	1563	1781	1870	1550	1781	3172	403	1781	3533	96
Grp Volume(v), veh/h	64	98	26	97	118	149	52	872	907	143	387	403
Grp Sat Flow(s),veh/h/ln	1728	1870	1563	1781	1870	1550	1781	1777	1798	1781	1777	1853
Q Serve(g_s), s	1.8	5.0	1.5	5.4	5.9	9.3	2.9	46.9	49.5	8.0	11.9	11.9
Cycle Q Clear(g_c), s	1.8	5.0	1.5	5.4	5.9	9.3	2.9	46.9	49.5	8.0	11.9	11.9
Prop In Lane	1.00		1.00	1.00		1.00	1.00		0.22	1.00		0.05
Lane Grp Cap(c), veh/h	142	204	170	122	255	211	67	925	936	173	1030	1074
V/C Ratio(X)	0.45	0.48	0.15	0.79	0.46	0.70	0.77	0.94	0.97	0.83	0.38	0.38
Avail Cap(c_a), veh/h	180	536	448	130	562	465	154	927	938	182	1030	1074
HCM Platoon Ratio	1.00	1.00	1.00	1.00	1.00	1.00	1.00	1.00	1.00	1.00	1.00	1.00
Upstream Filter(I)	1.00	1.00	1.00	1.00	1.00	1.00	1.00	1.00	1.00	1.00	1.00	1.00
Uniform Delay (d), s/veh	47.6	42.5	41.0	46.6	40.4	41.9	48.4	22.9	23.5	45.0	11.5	11.5
Incr Delay (d2), s/veh	0.8	1.8	0.4	24.1	1.3	4.3	6.8	17.5	22.0	23.4	0.3	0.3
Initial Q Delay(d3), s/veh	0.0	0.0	0.0	0.0	0.0	0.0	0.0	0.0	0.0	0.0	0.0	0.0
%ile BackOfQ(50%),veh/ln	0.8	2.4	0.6	3.1	2.7	3.7	1.4	21.6	23.9	4.5	4.2	4.4
Unsig. Movement Delay, s/veh												
LnGrp Delay(d), s/veh	48.4	44.3	41.4	70.7	41.7	46.2	55.2	40.4	45.5	68.4	11.8	11.8
LnGrp LOS	D	D	D	E	D	D	E	D	D	E	B	B
Approach Vol, veh/h		188			364			1831			933	
Approach Delay, s/veh		45.3			51.3			43.4			20.5	
Approach LOS		D			D			D			C	

Timer - Assigned Phs	1	2	3	4	5	6	7	8
Phs Duration (G+Y+Rc), s	14.4	58.7	11.6	16.9	8.4	64.7	8.8	19.6
Change Period (Y+Rc), s	4.6	5.8	4.6	* 5.8	4.6	5.8	4.6	5.8
Max Green Setting (Gmax), s	10.4	53.0	7.4	* 29	8.8	54.6	5.3	30.5
Max Q Clear Time (g_c+I1), s	10.0	51.5	7.4	7.0	4.9	13.9	3.8	11.3
Green Ext Time (p_c), s	0.0	1.4	0.0	0.5	0.0	7.7	0.0	1.0

Intersection Summary	
HCM 7th Control Delay, s/veh	37.9
HCM 7th LOS	D

Notes

* HCM 7th computational engine requires equal clearance times for the phases crossing the barrier.

Lane Group	WBL	WBR	NBT	NBR	SBL	SBT
Lane Configurations						
Traffic Volume (vph)	20	332	1441	25	121	649
Future Volume (vph)	20	332	1441	25	121	649
Turn Type	Prot	Perm	NA	Perm	Prot	NA
Protected Phases	8		2		1	6
Permitted Phases		8		2		
Detector Phase	8	8	2	2	1	6
Switch Phase						
Minimum Initial (s)	10.0	10.0	10.0	10.0	5.0	10.0
Minimum Split (s)	33.4	33.4	27.5	27.5	9.6	16.5
Total Split (s)	36.0	36.0	64.0	64.0	20.0	84.0
Total Split (%)	30.0%	30.0%	53.3%	53.3%	16.7%	70.0%
Yellow Time (s)	4.4	4.4	5.5	5.5	3.6	5.5
All-Red Time (s)	1.0	1.0	1.0	1.0	1.0	1.0
Lost Time Adjust (s)	0.0	0.0	0.0	0.0	0.0	0.0
Total Lost Time (s)	5.4	5.4	6.5	6.5	4.6	6.5
Lead/Lag			Lag	Lag	Lead	
Lead-Lag Optimize?			Yes	Yes	Yes	
Recall Mode	None	None	Min	Min	None	Min
Act Effct Green (s)	16.5	16.5	54.1	54.1	11.7	70.5
Actuated g/C Ratio	0.17	0.17	0.55	0.55	0.12	0.71
v/c Ratio	0.07	0.81	0.84	0.03	0.65	0.29
Control Delay (s/veh)	36.4	29.1	25.5	8.2	59.9	6.2
Queue Delay	0.0	0.0	0.0	0.0	0.0	0.0
Total Delay (s/veh)	36.4	29.1	25.5	8.2	59.9	6.2
LOS	D	C	C	A	E	A
Approach Delay (s/veh)	29.5		25.2			14.6
Approach LOS	C		C			B

Intersection Summary	
Cycle Length: 120	
Actuated Cycle Length: 99.2	
Natural Cycle: 90	
Control Type: Actuated-Uncoordinated	
Maximum v/c Ratio: 0.84	
Intersection Signal Delay (s/veh): 22.6	Intersection LOS: C
Intersection Capacity Utilization 70.3%	ICU Level of Service C
Analysis Period (min) 15	

Splits and Phases: 5: La Sierra Av. & McAllister Pkwy.

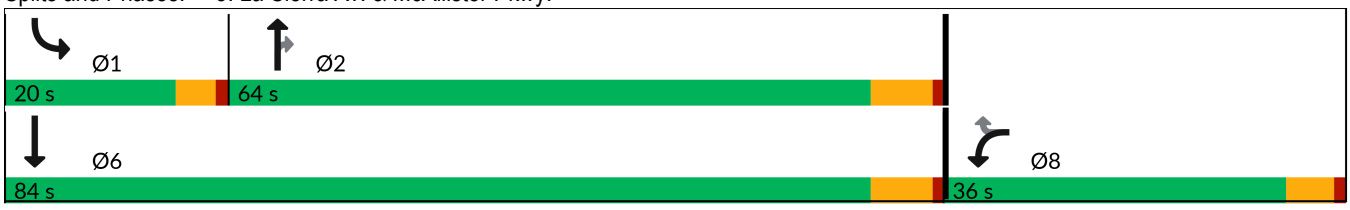



Movement	WBL	WBR	NBT	NBR	SBL	SBT
Lane Configurations						
Traffic Volume (veh/h)	20	332	1441	25	121	649
Future Volume (veh/h)	20	332	1441	25	121	649
Initial Q (Qb), veh	0	0	0	0	0	0
Lane Width Adj.	1.00	1.00	1.00	1.00	1.00	1.00
Ped-Bike Adj(A_pbT)	1.00	1.00		1.00	1.00	
Parking Bus, Adj	1.00	1.00	1.00	1.00	1.00	1.00
Work Zone On Approach	No		No			No
Adj Sat Flow, veh/h/ln	1870	1870	1870	1870	1870	1870
Adj Flow Rate, veh/h	22	255	1619	25	136	729
Peak Hour Factor	0.89	0.89	0.89	0.89	0.89	0.89
Percent Heavy Veh, %	2	2	2	2	2	2
Cap, veh/h	329	293	1943	867	168	2450
Arrive On Green	0.18	0.18	0.55	0.55	0.09	0.69
Sat Flow, veh/h	1781	1585	3647	1585	1781	3647
Grp Volume(v), veh/h	22	255	1619	25	136	729
Grp Sat Flow(s),veh/h/ln	1781	1585	1777	1585	1781	1777
Q Serve(g_s), s	1.0	14.8	35.9	0.7	7.1	7.6
Cycle Q Clear(g_c), s	1.0	14.8	35.9	0.7	7.1	7.6
Prop In Lane	1.00	1.00		1.00	1.00	
Lane Grp Cap(c), veh/h	329	293	1943	867	168	2450
V/C Ratio(X)	0.07	0.87	0.83	0.03	0.81	0.30
Avail Cap(c_a), veh/h	575	512	2156	962	289	2906
HCM Platoon Ratio	1.00	1.00	1.00	1.00	1.00	1.00
Upstream Filter(I)	1.00	1.00	1.00	1.00	1.00	1.00
Uniform Delay (d), s/veh	31.9	37.5	17.9	9.9	42.1	5.7
Incr Delay (d2), s/veh	0.1	7.8	2.9	0.0	3.6	0.1
Initial Q Delay(d3), s/veh	0.0	0.0	0.0	0.0	0.0	0.0
%ile BackOfQ(50%),veh/ln	0.4	6.1	12.6	0.2	3.1	1.9
Unsig. Movement Delay, s/veh						
LnGrp Delay(d), s/veh	32.0	45.3	20.8	9.9	45.7	5.8
LnGrp LOS	C	D	C	A	D	A
Approach Vol, veh/h	277		1644			865
Approach Delay, s/veh	44.3		20.6			12.1
Approach LOS	D		C			B

Timer - Assigned Phs	1	2				6	8
Phs Duration (G+Y+Rc), s	13.5	58.3				71.8	22.9
Change Period (Y+Rc), s	4.6	6.5				6.5	5.4
Max Green Setting (Gmax), s	15.4	57.5				77.5	30.6
Max Q Clear Time (g_c+I1), s	9.1	37.9				9.6	16.8
Green Ext Time (p_c), s	0.1	13.9				7.5	0.7

Intersection Summary	
HCM 7th Control Delay, s/veh	20.3
HCM 7th LOS	C

Intersection	
Intersection Delay, s/veh	97.8
Intersection LOS	F

Movement	WBL	WBR	NBT	NBR	SBL	SBT
Lane Configurations						
Traffic Vol, veh/h	105	715	122	37	328	144
Future Vol, veh/h	105	715	122	37	328	144
Peak Hour Factor	0.95	0.95	0.95	0.95	0.95	0.95
Heavy Vehicles, %	2	2	2	2	2	2
Mvmt Flow	111	753	128	39	345	152
Number of Lanes	1	0	2	0	1	1

Approach	WB	NB	SB
Opposing Approach		SB	NB
Opposing Lanes	0	2	2
Conflicting Approach Left	NB		WB
Conflicting Lanes Left	2	0	1
Conflicting Approach Right	SB	WB	
Conflicting Lanes Right	2	1	0
HCM Control Delay, s/veh	157.4	12.4	23
HCM LOS	F	B	C

Lane	NBLn1	NBLn2	WBLn1	SBLn1	SBLn2
Vol Left, %	0%	0%	13%	100%	0%
Vol Thru, %	100%	52%	0%	0%	100%
Vol Right, %	0%	48%	87%	0%	0%
Sign Control	Stop	Stop	Stop	Stop	Stop
Traffic Vol by Lane	81	78	820	328	144
LT Vol	0	0	105	328	0
Through Vol	81	41	0	0	144
RT Vol	0	37	715	0	0
Lane Flow Rate	86	82	863	345	152
Geometry Grp	5	5	2	5	5
Degree of Util (X)	0.175	0.159	1.285	0.696	0.284
Departure Headway (Hd)	8.255	7.908	5.361	8.076	7.559
Convergence, Y/N	Yes	Yes	Yes	Yes	Yes
Cap	437	456	682	452	479
Service Time	5.955	5.608	3.361	5.776	5.259
HCM Lane V/C Ratio	0.197	0.18	1.265	0.763	0.317
HCM Control Delay, s/veh	12.7	12.1	157.4	27.3	13.2
HCM Lane LOS	B	B	F	D	B
HCM 95th-tile Q	0.6	0.6	33.6	5.2	1.2

Intersection	
Intersection Delay, s/veh	16.4
Intersection LOS	C

Movement	EBL	EBT	WBT	WBR	SBL	SBR
Lane Configurations						
Traffic Vol, veh/h	55	311	683	129	63	79
Future Vol, veh/h	55	311	683	129	63	79
Peak Hour Factor	0.96	0.96	0.96	0.96	0.96	0.96
Heavy Vehicles, %	2	2	2	2	2	2
Mvmt Flow	57	324	711	134	66	82
Number of Lanes	1	1	2	0	1	0

Approach	EB	WB	SB
Opposing Approach	WB	EB	
Opposing Lanes	2	2	0
Conflicting Approach Left	SB		WB
Conflicting Lanes Left	1	0	2
Conflicting Approach Right		SB	EB
Conflicting Lanes Right	0	1	2
HCM Control Delay, s/veh	14.8	18	11.2
HCM LOS	B	C	B

Lane	EBLn1	EBLn2	WBLn1	WBLn2	SBLn1
Vol Left, %	100%	0%	0%	0%	44%
Vol Thru, %	0%	100%	100%	64%	0%
Vol Right, %	0%	0%	0%	36%	56%
Sign Control	Stop	Stop	Stop	Stop	Stop
Traffic Vol by Lane	55	311	455	357	142
LT Vol	55	0	0	0	63
Through Vol	0	311	455	228	0
RT Vol	0	0	0	129	79
Lane Flow Rate	57	324	474	372	148
Geometry Grp	5	5	5	5	2
Degree of Util (X)	0.103	0.54	0.723	0.54	0.252
Departure Headway (Hd)	6.503	5.997	5.486	5.23	6.129
Convergence, Y/N	Yes	Yes	Yes	Yes	Yes
Cap	552	603	659	691	587
Service Time	4.236	3.73	3.209	2.953	4.161
HCM Lane V/C Ratio	0.103	0.537	0.719	0.538	0.252
HCM Control Delay, s/veh	10	15.6	21.2	13.9	11.2
HCM Lane LOS	A	C	C	B	B
HCM 95th-tile Q	0.3	3.2	6.2	3.3	1

Intersection	
Int Delay, s/veh	5.9

Movement	EBL	EBT	WBT	WBR	SBL	SBR
Lane Configurations						
Traffic Vol, veh/h	76	313	601	14	38	216
Future Vol, veh/h	76	313	601	14	38	216
Conflicting Peds, #/hr	0	0	0	0	0	0
Sign Control	Free	Free	Free	Free	Stop	Stop
RT Channelized	-	None	-	None	-	None
Storage Length	100	-	-	-	0	-
Veh in Median Storage, #	-	0	0	-	1	-
Grade, %	-	0	0	-	0	-
Peak Hour Factor	92	92	92	92	92	92
Heavy Vehicles, %	2	2	2	2	2	2
Mvmt Flow	83	340	653	15	41	235

Major/Minor	Major1		Major2		Minor2	
Conflicting Flow All	668	0	-	0	1166	661
Stage 1	-	-	-	-	661	-
Stage 2	-	-	-	-	505	-
Critical Hdwy	4.12	-	-	-	6.42	6.22
Critical Hdwy Stg 1	-	-	-	-	5.42	-
Critical Hdwy Stg 2	-	-	-	-	5.42	-
Follow-up Hdwy	2.218	-	-	-	3.518	3.318
Pot Cap-1 Maneuver	921	-	-	-	214	462
Stage 1	-	-	-	-	514	-
Stage 2	-	-	-	-	606	-
Platoon blocked, %			-	-	-	
Mov Cap-1 Maneuver	921	-	-	-	195	462
Mov Cap-2 Maneuver	-	-	-	-	328	-
Stage 1	-	-	-	-	468	-
Stage 2	-	-	-	-	606	-

Approach	EB	WB	SB
HCM Control Delay, s/v	1.82	0	26.5
HCM LOS			D

Minor Lane/Major Mvmt	EBL	EBT	WBT	WBR	SBLn1
Capacity (veh/h)	921	-	-	-	436
HCM Lane V/C Ratio	0.09	-	-	-	0.634
HCM Control Delay (s/veh)	9.3	-	-	-	26.5
HCM Lane LOS	A	-	-	-	D
HCM 95th %tile Q(veh)	0.3	-	-	-	4.3

Lane Group	WBL	WBT	WBR	NBL	NBT	SBT	SBR
Lane Configurations							
Traffic Volume (vph)	597	2	647	469	1138	1683	369
Future Volume (vph)	597	2	647	469	1138	1683	369
Turn Type	Split	NA	Perm	Prot	NA	NA	Perm
Protected Phases	8	8		5	2	6	
Permitted Phases			8				6
Detector Phase	8	8	8	5	2	6	6
Switch Phase							
Minimum Initial (s)	5.0	5.0	5.0	5.0	5.0	5.0	5.0
Minimum Split (s)	10.0	10.0	10.0	9.0	26.5	29.5	29.5
Total Split (s)	39.0	39.0	39.0	20.0	61.0	41.0	41.0
Total Split (%)	39.0%	39.0%	39.0%	20.0%	61.0%	41.0%	41.0%
Yellow Time (s)	4.0	4.0	4.0	3.0	4.5	4.5	4.5
All-Red Time (s)	1.0	1.0	1.0	1.0	1.0	1.0	1.0
Lost Time Adjust (s)	0.0	0.0	0.0	0.0	0.0	0.0	0.0
Total Lost Time (s)	5.0	5.0	5.0	4.0	5.5	5.5	5.5
Lead/Lag				Lead		Lag	Lag
Lead-Lag Optimize?				Yes		Yes	Yes
Recall Mode	None	None	None	None	C-Min	C-Min	C-Min
Act Effct Green (s)	31.2	31.2	31.2	16.0	58.3	38.3	38.3
Actuated g/C Ratio	0.31	0.31	0.31	0.16	0.58	0.38	0.38
v/c Ratio	0.86	0.82	0.77	0.89	0.39	0.88	0.51
Control Delay (s/veh)	48.9	40.6	35.9	40.3	25.6	36.2	13.0
Queue Delay	0.4	0.3	0.0	0.0	0.0	0.4	0.0
Total Delay (s/veh)	49.3	41.0	35.9	40.3	25.6	36.6	13.0
LOS	D	D	D	D	C	D	B
Approach Delay (s/veh)		42.3			29.9	32.4	
Approach LOS		D			C	C	

Intersection Summary

Cycle Length: 100
Actuated Cycle Length: 100
Offset: 0 (0%), Referenced to phase 2:NBT and 6:SBT, Start of Yellow, Master Intersection
Natural Cycle: 80
Control Type: Actuated-Coordinated
Maximum v/c Ratio: 0.89
Intersection Signal Delay (s/veh): 34.1 Intersection LOS: C
Intersection Capacity Utilization 83.1% ICU Level of Service E
Analysis Period (min) 15

Splits and Phases: 1: La Sierra Av. & SR-91 WB Ramps

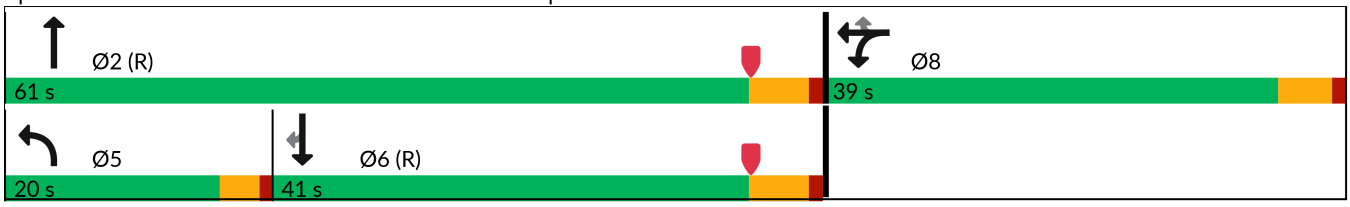

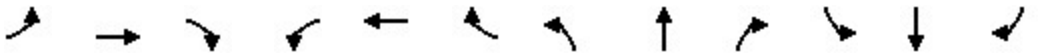

Movement	EBL	EBT	EBR	WBL	WBT	WBR	NBL	NBT	NBR	SBL	SBT	SBR
Lane Configurations												
Traffic Volume (veh/h)	0	0	0	597	2	647	469	1138	0	0	1683	369
Future Volume (veh/h)	0	0	0	597	2	647	469	1138	0	0	1683	369
Initial Q (Qb), veh				0	0	0	0	0	0	0	0	0
Lane Width Adj.				1.00	1.00	1.00	1.00	1.00	1.00	1.00	1.00	1.00
Ped-Bike Adj(A_pbT)				1.00		1.00	1.00		1.00	1.00		0.98
Parking Bus, Adj				1.00	1.00	1.00	1.00	1.00	1.00	1.00	1.00	1.00
Work Zone On Approach					No			No			No	
Adj Sat Flow, veh/h/ln				1870	1900	1900	1856	1885	0	0	1885	1900
Adj Flow Rate, veh/h				757	0	303	484	1173	0	0	1735	294
Peak Hour Factor				0.97	0.97	0.97	0.97	0.97	0.97	0.97	0.97	0.97
Percent Heavy Veh, %				2	0	0	3	1	0	0	1	0
Cap, veh/h				882	0	399	535	3331	0	0	2323	715
Arrive On Green				0.25	0.00	0.25	0.31	1.00	0.00	0.00	0.45	0.45
Sat Flow, veh/h				3563	0	1610	3428	5316	0	0	5316	1584
Grp Volume(v), veh/h				757	0	303	484	1173	0	0	1735	294
Grp Sat Flow(s),veh/h/ln				1781	0	1610	1714	1716	0	0	1716	1584
Q Serve(g_s), s				20.3	0.0	17.4	13.5	0.0	0.0	0.0	27.9	12.5
Cycle Q Clear(g_c), s				20.3	0.0	17.4	13.5	0.0	0.0	0.0	27.9	12.5
Prop In Lane				1.00		1.00	1.00		0.00	0.00		1.00
Lane Grp Cap(c), veh/h				882	0	399	535	3331	0	0	2323	715
V/C Ratio(X)				0.86	0.00	0.76	0.90	0.35	0.00	0.00	0.75	0.41
Avail Cap(c_a), veh/h				1211	0	547	549	3331	0	0	2323	715
HCM Platoon Ratio				1.00	1.00	1.00	2.00	2.00	1.00	1.00	1.00	1.00
Upstream Filter(I)				1.00	0.00	1.00	0.43	0.43	0.00	0.00	1.00	1.00
Uniform Delay (d), s/veh				35.9	0.0	34.9	33.7	0.0	0.0	0.0	22.7	18.5
Incr Delay (d2), s/veh				4.3	0.0	3.5	8.9	0.1	0.0	0.0	2.2	1.7
Initial Q Delay(d3), s/veh				0.0	0.0	0.0	0.0	0.0	0.0	0.0	0.0	0.0
%ile BackOfQ(50%),veh/ln				8.9	0.0	6.9	5.1	0.0	0.0	0.0	10.7	4.6
Unsig. Movement Delay, s/veh												
LnGrp Delay(d), s/veh				40.2	0.0	38.3	42.6	0.1	0.0	0.0	25.0	20.2
LnGrp LOS				D		D	D	A			C	C
Approach Vol, veh/h					1060			1657			2029	
Approach Delay, s/veh					39.7			12.5			24.3	
Approach LOS					D			B			C	

Timer - Assigned Phs	2		5	6		8						
Phs Duration (G+Y+Rc), s	70.2		19.6	50.6		29.8						
Change Period (Y+Rc), s	5.5		4.0	5.5		5.0						
Max Green Setting (Gmax), s	55.5		16.0	35.5		34.0						
Max Q Clear Time (g_c+I1), s	2.0		15.5	29.9		22.3						
Green Ext Time (p_c), s	9.9		0.1	4.6		2.5						

Intersection Summary		
HCM 7th Control Delay, s/veh	23.6	
HCM 7th LOS	C	

Notes
User approved volume balancing among the lanes for turning movement.

Lane Group	EBL	EBT	EBR	NBT	NBR	SBL	SBT
Lane Configurations							
Traffic Volume (vph)	283	11	977	1310	375	524	1760
Future Volume (vph)	283	11	977	1310	375	524	1760
Turn Type	Split	NA	Perm	NA	Perm	Prot	NA
Protected Phases	4	4		2		1	6
Permitted Phases			4		2		
Detector Phase	4	4	4	2	2	1	6
Switch Phase							
Minimum Initial (s)	5.0	5.0	5.0	5.0	5.0	5.0	5.0
Minimum Split (s)	10.0	10.0	10.0	29.5	29.5	9.0	26.5
Total Split (s)	48.0	48.0	48.0	33.0	33.0	19.0	52.0
Total Split (%)	48.0%	48.0%	48.0%	33.0%	33.0%	19.0%	52.0%
Yellow Time (s)	4.0	4.0	4.0	4.5	4.5	3.0	4.5
All-Red Time (s)	1.0	1.0	1.0	1.0	1.0	1.0	1.0
Lost Time Adjust (s)	0.0	0.0	0.0	0.0	0.0	0.0	0.0
Total Lost Time (s)	5.0	5.0	5.0	5.5	5.5	4.0	5.5
Lead/Lag				Lag	Lag	Lead	
Lead-Lag Optimize?				Yes	Yes	Yes	
Recall Mode	None	None	None	C-Min	C-Min	None	C-Min
Act Effct Green (s)	39.9	39.9	39.9	28.3	28.3	17.3	49.6
Actuated g/C Ratio	0.40	0.40	0.40	0.28	0.28	0.17	0.50
v/c Ratio	0.39	0.90	0.81	0.93	0.53	0.90	0.70
Control Delay (s/veh)	22.6	47.7	33.8	47.5	6.1	38.5	13.6
Queue Delay	0.0	0.0	0.0	0.0	0.0	0.0	0.7
Total Delay (s/veh)	22.6	47.7	33.8	47.5	6.1	38.5	14.3
LOS	C	D	C	D	A	D	B
Approach Delay (s/veh)		37.1		38.3			19.9
Approach LOS		D		D			B

Intersection Summary	
Cycle Length: 100	
Actuated Cycle Length: 100	
Offset: 28 (28%), Referenced to phase 2:NBT and 6:SBT, Start of Yellow	
Natural Cycle: 90	
Control Type: Actuated-Coordinated	
Maximum v/c Ratio: 0.93	
Intersection Signal Delay (s/veh): 30.0	Intersection LOS: C
Intersection Capacity Utilization 83.1%	ICU Level of Service E
Analysis Period (min) 15	

Splits and Phases: 2: La Sierra Av. & SR-91 EB Ramps

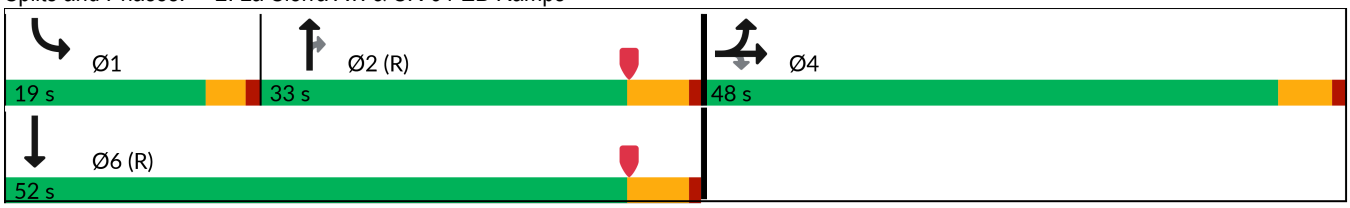

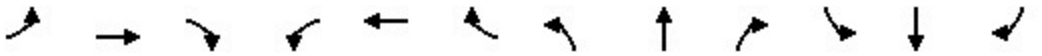

Movement	EBL	EBT	EBR	WBL	WBT	WBR	NBL	NBT	NBR	SBL	SBT	SBR
Lane Configurations												
Traffic Volume (veh/h)	283	11	977	0	0	0	0	1310	375	524	1760	0
Future Volume (veh/h)	283	11	977	0	0	0	0	1310	375	524	1760	0
Initial Q (Qb), veh	0	0	0				0	0	0	0	0	0
Lane Width Adj.	1.00	1.00	1.00				1.00	1.00	1.00	1.00	1.00	1.00
Ped-Bike Adj(A_pbT)	1.00		1.00				1.00		0.98	1.00		1.00
Parking Bus, Adj	1.00	1.00	1.00				1.00	1.00	1.00	1.00	1.00	1.00
Work Zone On Approach		No						No			No	
Adj Sat Flow, veh/h/ln	1870	1752	1856				0	1870	1885	1870	1885	0
Adj Flow Rate, veh/h	196	0	868				0	1337	245	535	1796	0
Peak Hour Factor	0.98	0.98	0.98				0.98	0.98	0.98	0.98	0.98	0.98
Percent Heavy Veh, %	2	10	3				0	2	1	2	1	0
Cap, veh/h	556	0	982				0	2006	617	518	3000	0
Arrive On Green	0.31	0.00	0.31				0.00	0.39	0.39	0.10	0.39	0.00
Sat Flow, veh/h	1781	0	3145				0	5274	1571	3456	5316	0
Grp Volume(v), veh/h	196	0	868				0	1337	245	535	1796	0
Grp Sat Flow(s),veh/h/ln	1781	0	1572				0	1702	1571	1728	1716	0
Q Serve(g_s), s	8.5	0.0	26.2				0.0	21.5	11.2	15.0	27.8	0.0
Cycle Q Clear(g_c), s	8.5	0.0	26.2				0.0	21.5	11.2	15.0	27.8	0.0
Prop In Lane	1.00		1.00				0.00		1.00	1.00		0.00
Lane Grp Cap(c), veh/h	556	0	982				0	2006	617	518	3000	0
V/C Ratio(X)	0.35	0.00	0.88				0.00	0.67	0.40	1.03	0.60	0.00
Avail Cap(c_a), veh/h	766	0	1352				0	2006	617	518	3000	0
HCM Platoon Ratio	1.00	1.00	1.00				1.00	1.00	1.00	0.67	0.67	1.00
Upstream Filter(I)	1.00	0.00	1.00				0.00	0.51	0.51	0.36	0.36	0.00
Uniform Delay (d), s/veh	26.6	0.0	32.7				0.0	25.0	21.8	45.0	21.2	0.0
Incr Delay (d2), s/veh	0.3	0.0	5.1				0.0	0.9	1.0	32.4	0.3	0.0
Initial Q Delay(d3), s/veh	0.0	0.0	0.0				0.0	0.0	0.0	0.0	0.0	0.0
%ile BackOfQ(50%),veh/ln	3.5	0.0	10.0				0.0	8.2	4.0	8.8	11.5	0.0
Unsig. Movement Delay, s/veh												
LnGrp Delay(d), s/veh	26.9	0.0	37.8				0.0	25.9	22.8	77.4	21.5	0.0
LnGrp LOS	C		D					C	C	F	C	
Approach Vol, veh/h		1064						1582			2331	
Approach Delay, s/veh		35.7						25.4			34.3	
Approach LOS		D						C			C	

Timer - Assigned Phs	1	2		4		6
Phs Duration (G+Y+Rc), s	19.0	44.8		36.2		63.8
Change Period (Y+Rc), s	4.0	5.5		5.0		5.5
Max Green Setting (Gmax), s	15.0	27.5		43.0		46.5
Max Q Clear Time (g_c+I1), s	17.0	23.5		28.2		29.8
Green Ext Time (p_c), s	0.0	2.9		3.0		11.0

Intersection Summary	
HCM 7th Control Delay, s/veh	31.8
HCM 7th LOS	C

Notes

User approved volume balancing among the lanes for turning movement.

Lane Group	EBL	EBT	EBR	WBL	WBT	WBR	NBL	NBT	NBR	SBL	SBT	SBR
Lane Configurations												
Traffic Volume (vph)	428	386	452	207	213	286	267	1044	146	326	1863	428
Future Volume (vph)	428	386	452	207	213	286	267	1044	146	326	1863	428
Turn Type	Prot	NA	Perm	Prot	NA	Perm	Prot	NA	Perm	Prot	NA	Perm
Protected Phases	7	4		3	8		5	2		1	6	
Permitted Phases			4			8			2			6
Detector Phase	7	4	4	3	8	8	5	2	2	1	6	6
Switch Phase												
Minimum Initial (s)	5.0	10.0	10.0	5.0	10.0	10.0	5.0	10.0	10.0	5.0	10.0	10.0
Minimum Split (s)	9.6	43.4	43.4	9.6	43.4	43.4	9.6	37.8	37.8	9.6	32.8	32.8
Total Split (s)	17.0	45.2	45.2	15.2	43.4	43.4	13.0	41.6	41.6	18.0	46.6	46.6
Total Split (%)	14.2%	37.7%	37.7%	12.7%	36.2%	36.2%	10.8%	34.7%	34.7%	15.0%	38.8%	38.8%
Yellow Time (s)	3.6	4.4	4.4	3.6	4.4	4.4	3.6	4.8	4.8	3.6	4.8	4.8
All-Red Time (s)	1.0	1.0	1.0	1.0	1.0	1.0	1.0	1.0	1.0	1.0	1.0	1.0
Lost Time Adjust (s)	0.0	0.0	0.0	0.0	0.0	0.0	0.0	0.0	0.0	0.0	0.0	0.0
Total Lost Time (s)	4.6	5.4	5.4	4.6	5.4	5.4	4.6	5.8	5.8	4.6	5.8	5.8
Lead/Lag	Lead	Lag	Lag	Lead	Lag	Lag	Lead	Lag	Lag	Lead	Lag	Lag
Lead-Lag Optimize?	Yes	Yes	Yes	Yes	Yes	Yes	Yes	Yes	Yes	Yes	Yes	Yes
Recall Mode	None	None	None	None	None	None	None	Min	Min	None	Min	Min
Act Effct Green (s)	12.5	31.0	31.0	10.0	28.5	28.5	8.5	36.3	36.3	13.2	41.1	41.1
Actuated g/C Ratio	0.11	0.28	0.28	0.09	0.26	0.26	0.08	0.33	0.33	0.12	0.37	0.37
v/c Ratio	1.21	0.43	0.88	0.73	0.26	0.58	1.11	0.68	0.26	0.87	1.08	0.54
Control Delay (s/veh)	157.8	33.5	42.4	65.1	32.5	18.8	136.9	36.3	6.0	71.1	79.8	5.2
Queue Delay	0.0	0.0	0.0	0.0	0.0	0.0	0.0	0.0	0.0	0.0	0.0	0.0
Total Delay (s/veh)	157.8	33.5	42.4	65.1	32.5	18.8	136.9	36.3	6.0	71.1	79.8	5.2
LOS	F	C	D	E	C	B	F	D	A	E	E	A
Approach Delay (s/veh)		78.7			36.5			51.7			66.5	
Approach LOS		E			D			D			E	

Intersection Summary	
Cycle Length: 120	
Actuated Cycle Length: 111.1	
Natural Cycle: 115	
Control Type: Actuated-Uncoordinated	
Maximum v/c Ratio: 1.21	
Intersection Signal Delay (s/veh): 62.0	Intersection LOS: E
Intersection Capacity Utilization 84.7%	ICU Level of Service E
Analysis Period (min) 15	

Splits and Phases: 3: La Sierra Av. & Indiana Av./S. Indiana Av.

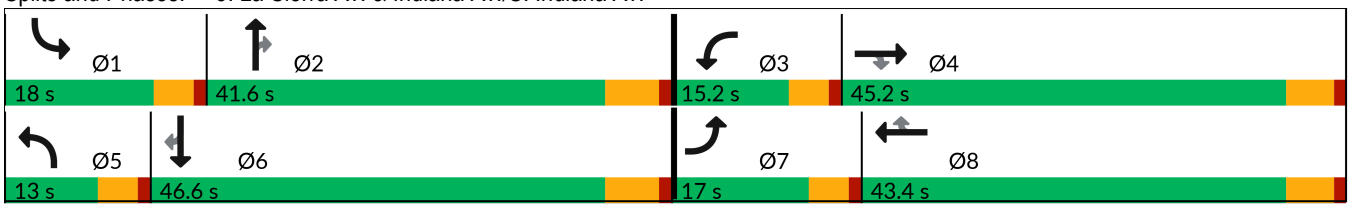

Movement	EBL	EBT	EBR	WBL	WBT	WBR	NBL	NBT	NBR	SBL	SBT	SBR
Lane Configurations												
Traffic Volume (veh/h)	428	386	452	207	213	286	267	1044	146	326	1863	428
Future Volume (veh/h)	428	386	452	207	213	286	267	1044	146	326	1863	428
Initial Q (Qb), veh	0	0	0	0	0	0	0	0	0	0	0	0
Lane Width Adj.	1.00	1.00	1.00	1.00	1.00	1.00	1.00	1.00	1.00	1.00	1.00	1.00
Ped-Bike Adj(A_pbT)	1.00		0.98	1.00		0.98	1.00		0.99	1.00		0.98
Parking Bus, Adj	1.00	1.00	1.00	1.00	1.00	1.00	1.00	1.00	1.00	1.00	1.00	1.00
Work Zone On Approach		No			No			No			No	
Adj Sat Flow, veh/h/ln	1870	1870	1870	1870	1870	1870	1870	1870	1870	1870	1870	1870
Adj Flow Rate, veh/h	465	420	328	225	232	246	290	1135	99	354	2025	340
Peak Hour Factor	0.92	0.92	0.92	0.92	0.92	0.92	0.92	0.92	0.92	0.92	0.92	0.92
Percent Heavy Veh, %	2	2	2	2	2	2	2	2	2	2	2	2
Cap, veh/h	401	946	412	287	829	364	271	1742	538	411	1948	591
Arrive On Green	0.12	0.40	0.27	0.08	0.35	0.23	0.12	0.51	0.51	0.18	0.57	0.00
Sat Flow, veh/h	3456	3554	1549	3456	3554	1559	3456	5106	1577	3456	5106	1548
Grp Volume(v), veh/h	465	420	328	225	232	246	290	1135	99	354	2025	340
Grp Sat Flow(s),veh/h/ln	1728	1777	1549	1728	1777	1559	1728	1702	1577	1728	1702	1548
Q Serve(g_s), s	12.4	9.2	21.1	6.8	5.0	15.4	8.4	17.4	3.6	10.6	40.8	23.5
Cycle Q Clear(g_c), s	12.4	9.2	21.1	6.8	5.0	15.4	8.4	17.4	3.6	10.6	40.8	23.5
Prop In Lane	1.00		1.00	1.00		1.00	1.00		1.00	1.00		1.00
Lane Grp Cap(c), veh/h	401	946	412	287	829	364	271	1742	538	411	1948	591
V/C Ratio(X)	1.16	0.44	0.80	0.78	0.28	0.68	1.07	0.65	0.18	0.86	1.04	0.58
Avail Cap(c_a), veh/h	401	1322	576	342	1262	554	271	1742	538	433	1948	591
HCM Platoon Ratio	1.00	1.50	1.00	1.00	1.50	1.00	1.50	1.50	1.50	1.50	1.50	0.00
Upstream Filter(I)	1.00	1.00	1.00	1.00	1.00	1.00	1.00	1.00	1.00	1.00	1.00	1.00
Uniform Delay (d), s/veh	47.3	26.4	36.5	48.1	28.3	37.3	47.2	21.5	18.1	43.1	22.9	44.8
Incr Delay (d2), s/veh	96.6	0.3	5.2	7.7	0.2	2.2	74.0	1.0	0.2	14.7	31.6	1.7
Initial Q Delay(d3), s/veh	0.0	0.0	0.0	0.0	0.0	0.0	0.0	0.0	0.0	0.0	0.0	0.0
%ile BackOfQ(50%),veh/ln	10.6	3.6	8.3	3.2	2.0	5.9	6.1	5.5	1.3	5.0	16.9	0.3
Unsig. Movement Delay, s/veh												
LnGrp Delay(d), s/veh	143.9	26.7	41.8	55.8	28.5	39.5	121.2	22.4	18.3	57.9	54.5	46.5
LnGrp LOS	F	C	D	E	C	D	F	C	B	E	F	D
Approach Vol, veh/h		1213			703			1524			2719	
Approach Delay, s/veh		75.7			41.1			41.0			53.9	
Approach LOS		E			D			D			D	

Timer - Assigned Phs	1	2	3	4	5	6	7	8
Phs Duration (G+Y+Rc), s	17.3	42.3	13.5	33.9	13.0	46.6	17.0	30.4
Change Period (Y+Rc), s	4.6	5.8	4.6	5.4	4.6	5.8	4.6	5.4
Max Green Setting (Gmax), s	13.4	35.8	10.6	39.8	8.4	40.8	12.4	38.0
Max Q Clear Time (g_c+I1), s	12.6	19.4	8.8	23.1	10.4	42.8	14.4	17.4
Green Ext Time (p_c), s	0.1	9.2	0.1	3.5	0.0	0.0	0.0	2.1

Intersection Summary	
HCM 7th Control Delay, s/veh	53.5
HCM 7th LOS	D

Lane Group	EBL	EBT	EBR	WBL	WBT	WBR	NBL	NBT	SBL	SBT
Lane Configurations										
Traffic Volume (vph)	70	117	166	326	84	202	30	968	224	1847
Future Volume (vph)	70	117	166	326	84	202	30	968	224	1847
Turn Type	Prot	NA	Perm	Prot	NA	Perm	Prot	NA	Prot	NA
Protected Phases	7	4		3	8		5	2	1	6
Permitted Phases			4			8				
Detector Phase	7	4	4	3	8	8	5	2	1	6
Switch Phase										
Minimum Initial (s)	5.0	10.0	10.0	5.0	10.0	10.0	5.0	10.0	5.0	10.0
Minimum Split (s)	9.6	34.1	34.1	9.6	33.8	33.8	9.6	35.8	9.6	33.8
Total Split (s)	10.5	34.1	34.1	19.0	42.6	42.6	9.6	37.9	29.0	57.3
Total Split (%)	8.8%	28.4%	28.4%	15.8%	35.5%	35.5%	8.0%	31.6%	24.2%	47.8%
Yellow Time (s)	3.6	4.1	4.1	3.6	4.8	4.8	3.6	4.8	3.6	4.8
All-Red Time (s)	1.0	1.0	1.0	1.0	1.0	1.0	1.0	1.0	1.0	1.0
Lost Time Adjust (s)	0.0	0.0	0.0	0.0	0.0	0.0	0.0	0.0	0.0	0.0
Total Lost Time (s)	4.6	5.1	5.1	4.6	5.8	5.8	4.6	5.8	4.6	5.8
Lead/Lag	Lead	Lag	Lag	Lead	Lag	Lag	Lead	Lag	Lead	Lag
Lead-Lag Optimize?	Yes	Yes	Yes	Yes	Yes	Yes	Yes	Yes	Yes	Yes
Recall Mode	None	None	None	None	None	None	None	Min	None	Min
Act Effct Green (s)	5.7	14.5	14.5	14.6	24.8	24.8	5.1	35.5	17.3	52.0
Actuated g/C Ratio	0.06	0.14	0.14	0.14	0.24	0.24	0.05	0.35	0.17	0.51
v/c Ratio	0.38	0.47	0.46	1.38	0.20	0.40	0.37	0.95	0.80	1.10
Control Delay (s/veh)	55.4	46.4	8.3	229.2	33.8	6.7	63.4	49.6	61.1	78.2
Queue Delay	0.0	0.0	0.0	0.0	0.0	0.0	0.0	0.0	0.0	0.0
Total Delay (s/veh)	55.4	46.4	8.3	229.2	33.8	6.7	63.4	49.6	61.1	78.2
LOS	E	D	A	F	C	A	E	D	E	E
Approach Delay (s/veh)		30.2			129.0			50.0		76.4
Approach LOS		C			F			D		E

Intersection Summary	
Cycle Length: 120	
Actuated Cycle Length: 102.2	
Natural Cycle: 120	
Control Type: Actuated-Uncoordinated	
Maximum v/c Ratio: 1.38	
Intersection Signal Delay (s/veh): 73.0	Intersection LOS: E
Intersection Capacity Utilization 95.9%	ICU Level of Service F
Analysis Period (min) 15	

Splits and Phases: 4: La Sierra Av. & Victoria Av.

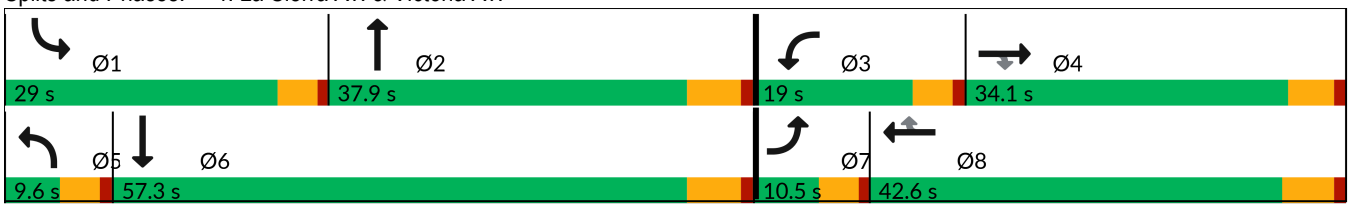

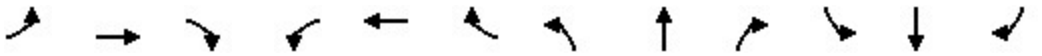

Movement	EBL	EBT	EBR	WBL	WBT	WBR	NBL	NBT	NBR	SBL	SBT	SBR
Lane Configurations												
Traffic Volume (veh/h)	70	117	166	326	84	202	30	968	162	224	1847	76
Future Volume (veh/h)	70	117	166	326	84	202	30	968	162	224	1847	76
Initial Q (Qb), veh	0	0	0	0	0	0	0	0	0	0	0	0
Lane Width Adj.	1.00	1.00	1.00	1.00	1.00	1.00	1.00	1.00	1.00	1.00	1.00	1.00
Ped-Bike Adj(A_pbT)	1.00		0.98	1.00		0.99	1.00		1.00	1.00		1.00
Parking Bus, Adj	1.00	1.00	1.00	1.00	1.00	1.00	1.00	1.00	1.00	1.00	1.00	1.00
Work Zone On Approach		No			No			No			No	
Adj Sat Flow, veh/h/ln	1870	1870	1870	1870	1870	1870	1870	1870	1870	1870	1870	1870
Adj Flow Rate, veh/h	74	124	71	347	89	71	32	1030	66	238	1965	28
Peak Hour Factor	0.94	0.94	0.94	0.94	0.94	0.94	0.94	0.94	0.94	0.94	0.94	0.94
Percent Heavy Veh, %	2	2	2	2	2	2	2	2	2	2	2	2
Cap, veh/h	154	188	156	257	376	314	53	1362	87	272	1892	27
Arrive On Green	0.04	0.10	0.10	0.14	0.20	0.20	0.03	0.69	0.39	0.15	0.90	0.52
Sat Flow, veh/h	3527	1870	1559	1781	1870	1563	1781	3460	222	1781	3661	52
Grp Volume(v), veh/h	74	124	71	347	89	71	32	551	545	238	991	1002
Grp Sat Flow(s),veh/h/ln	1763	1870	1559	1781	1870	1563	1781	1852	1830	1781	1852	1861
Q Serve(g_s), s	2.0	6.4	4.3	14.4	4.0	3.8	1.8	19.3	20.3	13.0	51.5	51.5
Cycle Q Clear(g_c), s	2.0	6.4	4.3	14.4	4.0	3.8	1.8	19.3	20.3	13.0	51.5	51.5
Prop In Lane	1.00		1.00	1.00		1.00	1.00		0.12	1.00		0.03
Lane Grp Cap(c), veh/h	154	188	156	257	376	314	53	729	721	272	957	962
V/C Ratio(X)	0.48	0.66	0.45	1.35	0.24	0.23	0.61	0.76	0.76	0.87	1.04	1.04
Avail Cap(c_a), veh/h	209	544	454	257	691	577	89	729	721	436	957	962
HCM Platoon Ratio	1.00	1.00	1.00	1.00	1.00	1.00	1.00	1.75	1.00	1.00	1.75	1.00
Upstream Filter(I)	1.00	1.00	1.00	1.00	1.00	1.00	1.00	1.00	1.00	1.00	1.00	1.00
Uniform Delay (d), s/veh	46.5	43.2	42.2	42.6	33.4	33.3	47.8	12.4	14.0	41.3	4.8	5.3
Incr Delay (d2), s/veh	0.9	3.9	2.0	180.1	0.3	0.4	4.2	4.9	4.9	6.8	38.8	40.3
Initial Q Delay(d3), s/veh	0.0	0.0	0.0	0.0	0.0	0.0	0.0	0.0	0.0	0.0	0.0	0.0
%ile BackOfQ(50%),veh/ln	0.9	3.1	1.7	18.9	1.8	1.4	0.8	5.4	5.9	6.0	12.4	13.1
Unsig. Movement Delay, s/veh												
LnGrp Delay(d), s/veh	47.4	47.1	44.3	222.7	33.7	33.7	52.0	17.2	18.9	48.1	43.5	45.6
LnGrp LOS	D	D	D	F	C	C	D	B	B	D	F	F
Approach Vol, veh/h		269			507			1128			2231	
Approach Delay, s/veh		46.4			163.1			19.0			44.9	
Approach LOS		D			F			B			D	

Timer - Assigned Phs	1	2	3	4	5	6	7	8
Phs Duration (G+Y+Rc), s	19.8	45.0	19.0	15.8	7.5	57.3	9.0	25.8
Change Period (Y+Rc), s	4.6	5.8	4.6	* 5.8	4.6	5.8	4.6	5.8
Max Green Setting (Gmax), s	24.4	32.1	14.4	* 29	5.0	51.5	5.9	36.8
Max Q Clear Time (g_c+I1), s	15.0	22.3	16.4	8.4	3.8	53.5	4.0	6.0
Green Ext Time (p_c), s	0.2	5.7	0.0	0.8	0.0	0.0	0.0	0.6

Intersection Summary	
HCM 7th Control Delay, s/veh	52.5
HCM 7th LOS	D

Notes

* HCM 7th computational engine requires equal clearance times for the phases crossing the barrier.

Lane Group	WBL	WBR	NBT	NBR	SBL	SBT
Lane Configurations						
Traffic Volume (vph)	9	222	939	14	389	1915
Future Volume (vph)	9	222	939	14	389	1915
Turn Type	Prot	Perm	NA	Perm	Prot	NA
Protected Phases	8		2		1	6
Permitted Phases		8		2		
Detector Phase	8	8	2	2	1	6
Switch Phase						
Minimum Initial (s)	10.0	10.0	10.0	10.0	5.0	10.0
Minimum Split (s)	33.4	33.4	27.5	27.5	9.6	16.5
Total Split (s)	35.0	35.0	47.0	47.0	38.0	85.0
Total Split (%)	29.2%	29.2%	39.2%	39.2%	31.7%	70.8%
Yellow Time (s)	4.4	4.4	5.5	5.5	3.6	5.5
All-Red Time (s)	1.0	1.0	1.0	1.0	1.0	1.0
Lost Time Adjust (s)	0.0	0.0	0.0	0.0	0.0	0.0
Total Lost Time (s)	5.4	5.4	6.5	6.5	4.6	6.5
Lead/Lag			Lag	Lag	Lead	
Lead-Lag Optimize?			Yes	Yes	Yes	
Recall Mode	None	None	Min	Min	None	Min
Act Effct Green (s)	13.1	13.1	34.3	34.3	26.8	65.8
Actuated g/C Ratio	0.14	0.14	0.38	0.38	0.29	0.72
v/c Ratio	0.04	0.55	0.75	0.03	0.80	0.80
Control Delay (s/veh)	37.3	10.4	30.2	12.9	44.3	12.3
Queue Delay	0.0	0.0	0.0	0.0	0.0	0.0
Total Delay (s/veh)	37.3	10.4	30.2	12.9	44.3	12.3
LOS	D	B	C	B	D	B
Approach Delay (s/veh)	11.5		29.9			17.7
Approach LOS	B		C			B

Intersection Summary	
Cycle Length: 120	
Actuated Cycle Length: 91.3	
Natural Cycle: 90	
Control Type: Actuated-Uncoordinated	
Maximum v/c Ratio: 0.80	
Intersection Signal Delay (s/veh): 20.6	Intersection LOS: C
Intersection Capacity Utilization 71.2%	ICU Level of Service C
Analysis Period (min) 15	

Splits and Phases: 5: La Sierra Av. & McAllister Pkwy.

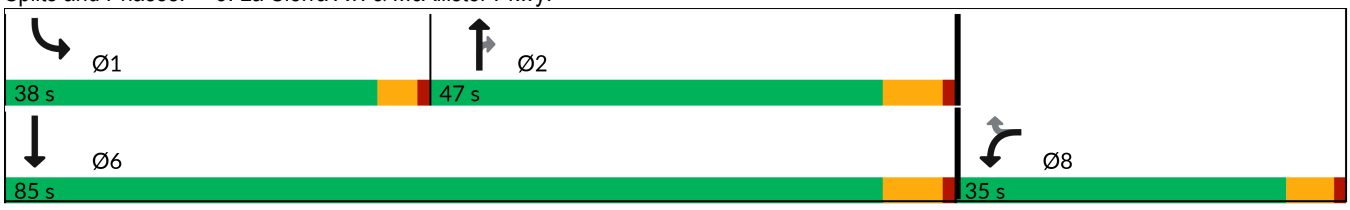



Movement	WBL	WBR	NBT	NBR	SBL	SBT
Lane Configurations						
Traffic Volume (veh/h)	9	222	939	14	389	1915
Future Volume (veh/h)	9	222	939	14	389	1915
Initial Q (Qb), veh	0	0	0	0	0	0
Lane Width Adj.	1.00	1.00	1.00	1.00	1.00	1.00
Ped-Bike Adj(A_pbT)	1.00	1.00		0.98	1.00	
Parking Bus, Adj	1.00	1.00	1.00	1.00	1.00	1.00
Work Zone On Approach	No		No			No
Adj Sat Flow, veh/h/ln	1870	1870	1870	1870	1870	1870
Adj Flow Rate, veh/h	10	130	999	15	414	2037
Peak Hour Factor	0.94	0.94	0.94	0.94	0.94	0.94
Percent Heavy Veh, %	2	2	2	2	2	2
Cap, veh/h	200	178	1570	686	453	2664
Arrive On Green	0.11	0.11	0.44	0.44	0.25	0.75
Sat Flow, veh/h	1781	1585	3647	1552	1781	3647
Grp Volume(v), veh/h	10	130	999	15	414	2037
Grp Sat Flow(s),veh/h/ln	1781	1585	1777	1552	1781	1777
Q Serve(g_s), s	0.4	6.8	18.8	0.5	19.4	28.9
Cycle Q Clear(g_c), s	0.4	6.8	18.8	0.5	19.4	28.9
Prop In Lane	1.00	1.00		1.00	1.00	
Lane Grp Cap(c), veh/h	200	178	1570	686	453	2664
V/C Ratio(X)	0.05	0.73	0.64	0.02	0.91	0.76
Avail Cap(c_a), veh/h	613	545	1672	730	691	3241
HCM Platoon Ratio	1.00	1.00	1.00	1.00	1.00	1.00
Upstream Filter(I)	1.00	1.00	1.00	1.00	1.00	1.00
Uniform Delay (d), s/veh	34.1	37.0	18.7	13.5	31.2	6.3
Incr Delay (d2), s/veh	0.1	5.7	0.9	0.0	9.0	1.1
Initial Q Delay(d3), s/veh	0.0	0.0	0.0	0.0	0.0	0.0
%ile BackOfQ(50%),veh/ln	0.2	2.8	6.7	0.1	8.6	5.1
Unsig. Movement Delay, s/veh						
LnGrp Delay(d), s/veh	34.2	42.7	19.5	13.6	40.1	7.4
LnGrp LOS	C	D	B	B	D	A
Approach Vol, veh/h	140		1014			2451
Approach Delay, s/veh	42.1		19.4			12.9
Approach LOS	D		B			B

Timer - Assigned Phs	1	2				6	8
Phs Duration (G+Y+Rc), s	26.5	44.5				71.0	15.0
Change Period (Y+Rc), s	4.6	6.5				6.5	5.4
Max Green Setting (Gmax), s	33.4	40.5				78.5	29.6
Max Q Clear Time (g_c+I1), s	21.4	20.8				30.9	8.8
Green Ext Time (p_c), s	0.5	8.4				33.6	0.4

Intersection Summary	
HCM 7th Control Delay, s/veh	15.9
HCM 7th LOS	B

Intersection	
Intersection Delay, s/veh	250.7
Intersection LOS	F

Movement	WBL	WBR	NBT	NBR	SBL	SBT
Lane Configurations						
Traffic Vol, veh/h	107	479	250	139	927	534
Future Vol, veh/h	107	479	250	139	927	534
Peak Hour Factor	0.93	0.93	0.93	0.93	0.93	0.93
Heavy Vehicles, %	2	2	2	2	2	2
Mvmt Flow	115	515	269	149	997	574
Number of Lanes	1	0	2	0	1	1

Approach	WB	NB	SB
Opposing Approach		SB	NB
Opposing Lanes	0	2	2
Conflicting Approach Left	NB		WB
Conflicting Lanes Left	2	0	1
Conflicting Approach Right	SB	WB	
Conflicting Lanes Right	2	1	0
HCM Control Delay, s/veh	30.6	16.8	381.2
HCM LOS	F	C	F

Lane	NBLn1	NBLn2	WBLn1	SBLn1	SBLn2
Vol Left, %	0%	0%	18%	100%	0%
Vol Thru, %	100%	37%	0%	0%	100%
Vol Right, %	0%	63%	82%	0%	0%
Sign Control	Stop	Stop	Stop	Stop	Stop
Traffic Vol by Lane	167	222	586	927	534
LT Vol	0	0	107	927	0
Through Vol	167	83	0	0	534
RT Vol	0	139	479	0	0
Lane Flow Rate	179	239	630	997	574
Geometry Grp	5	5	2	5	5
Degree of Util (X)	0.389	0.49	1.069	2.131	1.148
Departure Headway (Hd)	8.1	7.646	6.11	8.13	7.613
Convergence, Y/N	Yes	Yes	Yes	Yes	Yes
Cap	448	473	605	459	482
Service Time	5.8	5.346	4.028	5.83	5.313
HCM Lane V/C Ratio	0.4	0.505	1.041	2.172	1.191
HCM Control Delay, s/veh	15.9	17.5	80.6	534.7	114.6
HCM Lane LOS	C	C	F	F	F
HCM 95th-tile Q	1.8	2.6	18.3	67.8	19.3

Intersection	
Intersection Delay, s/veh	179.9
Intersection LOS	F

Movement	EBL	EBT	WBT	WBR	SBL	SBR
Lane Configurations						
Traffic Vol, veh/h	68	938	447	52	71	118
Future Vol, veh/h	68	938	447	52	71	118
Peak Hour Factor	0.94	0.94	0.94	0.94	0.94	0.94
Heavy Vehicles, %	2	2	2	2	2	2
Mvmt Flow	72	998	476	55	76	126
Number of Lanes	1	1	2	0	1	0

Approach	EB	WB	SB
Opposing Approach	WB	EB	
Opposing Lanes	2	2	0
Conflicting Approach Left	SB		WB
Conflicting Lanes Left	1	0	2
Conflicting Approach Right		SB	EB
Conflicting Lanes Right	0	1	2
HCM Control Delay, s/veh	282.8	14.9	14.2
HCM LOS	F	B	B

Lane	EBLn1	EBLn2	WBLn1	WBLn2	SBLn1
Vol Left, %	100%	0%	0%	0%	38%
Vol Thru, %	0%	100%	100%	74%	0%
Vol Right, %	0%	0%	0%	26%	62%
Sign Control	Stop	Stop	Stop	Stop	Stop
Traffic Vol by Lane	68	938	298	201	189
LT Vol	68	0	0	0	71
Through Vol	0	938	298	149	0
RT Vol	0	0	0	52	118
Lane Flow Rate	72	998	317	214	201
Geometry Grp	5	5	5	5	2
Degree of Util (X)	0.129	1.645	0.527	0.345	0.352
Departure Headway (Hd)	6.443	5.936	6.649	6.464	7.275
Convergence, Y/N	Yes	Yes	Yes	Yes	Yes
Cap	560	619	545	560	499
Service Time	4.143	3.636	4.349	4.164	5.275
HCM Lane V/C Ratio	0.129	1.612	0.582	0.382	0.403
HCM Control Delay, s/veh	10.1	313.3	16.5	12.5	14.2
HCM Lane LOS	B	F	C	B	B
HCM 95th-tile Q	0.4	55.6	3.1	1.5	1.6

Intersection	
Int Delay, s/veh	3.4

Movement	EBL	EBT	WBT	WBR	SBL	SBR
Lane Configurations						
Traffic Vol, veh/h	247	772	370	43	25	146
Future Vol, veh/h	247	772	370	43	25	146
Conflicting Peds, #/hr	0	0	0	0	0	0
Sign Control	Free	Free	Free	Free	Stop	Stop
RT Channelized	-	None	-	None	-	None
Storage Length	100	-	-	-	0	-
Veh in Median Storage, #	-	0	0	-	1	-
Grade, %	-	0	0	-	0	-
Peak Hour Factor	92	92	92	92	92	92
Heavy Vehicles, %	2	2	2	2	2	2
Mvmt Flow	268	839	402	47	27	159

Major/Minor	Major1		Major2		Minor2	
Conflicting Flow All	449	0	-	0	1802	426
Stage 1	-	-	-	-	426	-
Stage 2	-	-	-	-	1376	-
Critical Hdwy	4.12	-	-	-	6.42	6.22
Critical Hdwy Stg 1	-	-	-	-	5.42	-
Critical Hdwy Stg 2	-	-	-	-	5.42	-
Follow-up Hdwy	2.218	-	-	-	3.518	3.318
Pot Cap-1 Maneuver	1111	-	-	-	88	629
Stage 1	-	-	-	-	659	-
Stage 2	-	-	-	-	234	-
Platoon blocked, %			-	-	-	
Mov Cap-1 Maneuver	1111	-	-	-	66	629
Mov Cap-2 Maneuver	-	-	-	-	171	-
Stage 1	-	-	-	-	500	-
Stage 2	-	-	-	-	234	-

Approach	EB	WB	SB
HCM Control Delay, s/v	2.25	0	18.41
HCM LOS			C

Minor Lane/Major Mvmt	EBL	EBT	WBT	WBR	SBLn1
Capacity (veh/h)	1111	-	-	-	452
HCM Lane V/C Ratio	0.242	-	-	-	0.411
HCM Control Delay (s/veh)	9.3	-	-	-	18.4
HCM Lane LOS	A	-	-	-	C
HCM 95th %tile Q(veh)	0.9	-	-	-	2

APPENDIX 6.2: EAPC (2030) CONDITIONS QUEUING ANALYSIS WORKSHEETS

This Page Intentionally Left Blank



Lane Group	WBL	WBT	WBR	NBL	NBT	SBT	SBR
Lane Group Flow (vph)	314	315	315	785	1654	1180	208
v/c Ratio	0.76	0.76	0.74	0.88	0.50	0.67	0.33
Control Delay (s/veh)	46.8	37.9	36.4	42.6	19.2	31.7	9.8
Queue Delay	0.0	0.0	0.0	0.0	1.0	0.0	0.0
Total Delay (s/veh)	46.8	37.9	36.4	42.6	20.2	31.7	9.8
Queue Length 50th (ft)	193	158	150	275	341	241	22
Queue Length 95th (ft)	271	246	232	m#322	415	317	83
Internal Link Dist (ft)		1180			412	935	
Turn Bay Length (ft)	500		500	155			140
Base Capacity (vph)	532	519	534	922	3294	1758	628
Starvation Cap Reductn	0	0	0	0	1275	0	0
Spillback Cap Reductn	0	0	0	0	0	0	0
Storage Cap Reductn	0	0	0	0	0	0	0
Reduced v/c Ratio	0.59	0.61	0.59	0.85	0.82	0.67	0.33

Intersection Summary

95th percentile volume exceeds capacity, queue may be longer.
Queue shown is maximum after two cycles.
m Volume for 95th percentile queue is metered by upstream signal.



Lane Group	EBL	EBT	EBR	NBT	NBR	SBL	SBT
Lane Group Flow (vph)	363	349	329	1866	609	408	1132
v/c Ratio	0.80	0.79	0.74	0.85	0.60	0.81	0.36
Control Delay (s/veh)	47.2	42.0	35.4	30.9	4.5	63.6	3.1
Queue Delay	0.4	0.4	0.0	0.0	0.0	0.0	0.0
Total Delay (s/veh)	47.6	42.4	35.4	30.9	4.5	63.6	3.1
Queue Length 50th (ft)	224	193	153	406	0	90	18
Queue Length 95th (ft)	317	294	247	#521	70	#187	46
Internal Link Dist (ft)		1416		886			412
Turn Bay Length (ft)			450		415	155	
Base Capacity (vph)	543	517	515	2206	1018	507	3159
Starvation Cap Reductn	0	0	0	0	0	0	0
Spillback Cap Reductn	23	21	0	0	0	0	0
Storage Cap Reductn	0	0	0	0	0	0	0
Reduced v/c Ratio	0.70	0.70	0.64	0.85	0.60	0.80	0.36

Intersection Summary

95th percentile volume exceeds capacity, queue may be longer.
Queue shown is maximum after two cycles.

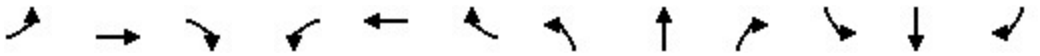

Lane Group	EBL	EBT	EBR	WBL	WBT	WBR	NBL	NBT	NBR	SBL	SBT	SBR
Lane Group Flow (vph)	545	247	188	131	259	318	445	1930	218	165	1203	553
v/c Ratio	0.89	0.25	0.32	0.55	0.41	0.73	0.95	0.99	0.31	0.84	0.78	0.69
Control Delay (s/veh)	60.1	27.5	5.1	56.3	37.6	25.0	75.7	50.3	7.6	82.8	37.3	11.2
Queue Delay	0.0	0.0	0.0	0.0	0.0	0.0	0.0	0.0	0.0	0.0	0.0	0.0
Total Delay (s/veh)	60.1	27.5	5.1	56.3	37.6	25.0	75.7	50.3	7.6	82.8	37.3	11.2
Queue Length 50th (ft)	170	63	0	40	77	73	141	417	15	53	243	36
Queue Length 95th (ft)	#354	93	45	85	112	162	#313	#757	81	#142	#426	192
Internal Link Dist (ft)		2549			2428			2703			886	
Turn Bay Length (ft)	205		205	205		130	200		305	355		535
Base Capacity (vph)	610	1715	854	254	1349	714	468	1949	708	196	1546	797
Starvation Cap Reductn	0	0	0	0	0	0	0	0	0	0	0	0
Spillback Cap Reductn	0	0	0	0	0	0	0	0	0	0	0	0
Storage Cap Reductn	0	0	0	0	0	0	0	0	0	0	0	0
Reduced v/c Ratio	0.89	0.14	0.22	0.52	0.19	0.45	0.95	0.99	0.31	0.84	0.78	0.69

Intersection Summary

95th percentile volume exceeds capacity, queue may be longer.
Queue shown is maximum after two cycles.

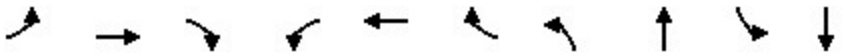

Lane Group	EBL	EBT	EBR	WBL	WBT	WBR	NBL	NBT	SBL	SBT
Lane Group Flow (vph)	64	98	71	97	118	267	52	1841	143	807
v/c Ratio	0.38	0.38	0.23	0.79	0.37	0.66	0.44	1.05	0.82	0.42
Control Delay (s/veh)	57.4	44.8	3.8	89.2	42.7	25.0	60.6	64.4	82.8	16.3
Queue Delay	0.0	0.0	0.0	0.0	0.0	0.0	0.0	0.0	0.0	0.0
Total Delay (s/veh)	57.4	44.8	3.8	89.2	42.7	25.0	60.6	64.4	82.8	16.3
Queue Length 50th (ft)	21	61	0	64	73	65	33	~675	93	153
Queue Length 95th (ft)	48	107	13	#179	124	148	81	#1028	#236	278
Internal Link Dist (ft)		810			1637			2644		1335
Turn Bay Length (ft)	130			205		200	215		210	
Base Capacity (vph)	172	513	509	123	538	564	147	1746	174	1940
Starvation Cap Reductn	0	0	0	0	0	0	0	0	0	0
Spillback Cap Reductn	0	0	0	0	0	0	0	0	0	0
Storage Cap Reductn	0	0	0	0	0	0	0	0	0	0
Reduced v/c Ratio	0.37	0.19	0.14	0.79	0.22	0.47	0.35	1.05	0.82	0.42

Intersection Summary

~ Volume exceeds capacity, queue is theoretically infinite.
Queue shown is maximum after two cycles.

95th percentile volume exceeds capacity, queue may be longer.
Queue shown is maximum after two cycles.



Lane Group	WBL	WBR	NBT	NBR	SBL	SBT
Lane Group Flow (vph)	22	373	1619	28	136	729
v/c Ratio	0.07	0.81	0.84	0.03	0.65	0.29
Control Delay (s/veh)	36.4	29.1	25.5	8.2	59.9	6.2
Queue Delay	0.0	0.0	0.0	0.0	0.0	0.0
Total Delay (s/veh)	36.4	29.1	25.5	8.2	59.9	6.2
Queue Length 50th (ft)	12	85	415	3	85	71
Queue Length 95th (ft)	35	194	#754	20	164	144
Internal Link Dist (ft)	3339		1159			2644
Turn Bay Length (ft)	150			200	300	
Base Capacity (vph)	559	663	2100	946	281	2818
Starvation Cap Reductn	0	0	0	0	0	0
Spillback Cap Reductn	0	0	0	0	0	0
Storage Cap Reductn	0	0	0	0	0	0
Reduced v/c Ratio	0.04	0.56	0.77	0.03	0.48	0.26

Intersection Summary

95th percentile volume exceeds capacity, queue may be longer.
Queue shown is maximum after two cycles.

Intersection: 1: La Sierra Av. & SR-91 WB Ramps

Movement	WB	WB	WB	NB	NB	NB	NB	NB	SB	SB	SB	SB
Directions Served	L	LTR	R	L	L	T	T	T	T	T	T	R
Maximum Queue (ft)	253	371	323	245	320	281	278	281	782	703	328	190
Average Queue (ft)	137	237	189	227	251	207	202	211	479	394	173	87
95th Queue (ft)	244	314	270	286	319	271	265	265	730	642	281	192
Link Distance (ft)		1183			444	444	444	444	949	949	949	
Upstream Blk Time (%)									0			
Queuing Penalty (veh)									0			
Storage Bay Dist (ft)	500		500	155								140
Storage Blk Time (%)				12	24						13	
Queuing Penalty (veh)				46	92						25	

Intersection: 2: La Sierra Av. & SR-91 EB Ramps

Movement	EB	EB	EB	NB	NB	NB	NB	SB	SB	SB	SB	SB
Directions Served	L	LTR	R	T	T	T	R	L	L	T	T	T
Maximum Queue (ft)	850	959	559	828	830	834	505	192	227	378	291	244
Average Queue (ft)	415	617	445	609	567	544	310	141	163	58	55	76
95th Queue (ft)	984	1067	665	938	945	936	630	202	218	222	194	193
Link Distance (ft)	1430	1430		848	848	848				444	444	444
Upstream Blk Time (%)		0		1	1	1				1	0	0
Queuing Penalty (veh)		0		9	6	5				3	1	1
Storage Bay Dist (ft)			450				415	155	155			
Storage Blk Time (%)		44	1			23	0	8	36	1		
Queuing Penalty (veh)		105	4			133	0	27	132	2		

Intersection: 3: La Sierra Av. & Indiana Av./S. Indiana Av.

Movement	EB	EB	EB	EB	EB	WB	WB	WB	WB	WB	NB	NB
Directions Served	L	L	T	T	R	L	L	T	T	R	L	L
Maximum Queue (ft)	235	265	774	679	113	96	102	128	256	188	234	275
Average Queue (ft)	199	230	346	217	46	30	53	72	77	111	139	236
95th Queue (ft)	281	306	800	619	92	72	92	117	175	182	216	343
Link Distance (ft)			2554	2554				2432	2432			
Upstream Blk Time (%)												
Queuing Penalty (veh)												
Storage Bay Dist (ft)	205	205			205	205	205			130	200	200
Storage Blk Time (%)	15	40	3	0					1	7	2	6
Queuing Penalty (veh)	16	44	14	0					3	9	12	37

Intersection: 3: La Sierra Av. & Indiana Av./S. Indiana Av.

Movement	NB	NB	NB	NB	SB	SB	SB	SB	SB	SB
Directions Served	T	T	T	R	L	L	T	T	T	R
Maximum Queue (ft)	1434	1392	1435	425	142	158	330	319	316	352
Average Queue (ft)	824	820	855	269	49	72	183	195	190	147
95th Queue (ft)	1680	1679	1698	580	105	126	281	287	282	287
Link Distance (ft)	2691	2691	2691				848	848	848	
Upstream Blk Time (%)										
Queuing Penalty (veh)										
Storage Bay Dist (ft)				305	355	355				535
Storage Blk Time (%)	45		50				0			
Queuing Penalty (veh)	184		99				0			

Intersection: 4: La Sierra Av. & Victoria Av.

Movement	EB	EB	EB	EB	WB	WB	WB	NB	NB	NB	SB	SB
Directions Served	L	L	T	R	L	T	R	L	T	TR	L	T
Maximum Queue (ft)	76	119	135	61	163	141	176	274	759	778	202	244
Average Queue (ft)	14	47	61	29	71	70	92	86	432	457	98	93
95th Queue (ft)	48	96	112	54	137	125	156	253	677	695	178	207
Link Distance (ft)			843	843		1670			2640	2640		1333
Upstream Blk Time (%)												
Queuing Penalty (veh)												
Storage Bay Dist (ft)	130	130			205		200	215			210	
Storage Blk Time (%)	0	0	1				0	0	34		0	1
Queuing Penalty (veh)	0	0	0				0	0	15		1	1

Intersection: 4: La Sierra Av. & Victoria Av.

Movement	SB	B20	B20
Directions Served	TR	T	T
Maximum Queue (ft)	240	218	335
Average Queue (ft)	104	11	26
95th Queue (ft)	220	139	258
Link Distance (ft)	1333	2691	2691
Upstream Blk Time (%)			
Queuing Penalty (veh)			
Storage Bay Dist (ft)			
Storage Blk Time (%)			
Queuing Penalty (veh)			

Intersection: 5: La Sierra Av. & McAllister Pkwy.

Movement	WB	WB	NB	NB	NB	SB	SB	SB
Directions Served	L	R	T	T	R	L	T	T
Maximum Queue (ft)	53	312	370	352	137	164	161	184
Average Queue (ft)	11	136	222	198	14	88	51	69
95th Queue (ft)	35	243	349	329	73	154	125	146
Link Distance (ft)		3360	1207	1207			2640	2640
Upstream Blk Time (%)								
Queuing Penalty (veh)								
Storage Bay Dist (ft)	150				200	300		
Storage Blk Time (%)		8		7				
Queuing Penalty (veh)		2		2				

Network Summary

Network wide Queuing Penalty: 1029



Lane Group	WBL	WBT	WBR	NBL	NBT	SBT	SBR
Lane Group Flow (vph)	449	428	407	484	1173	1735	380
v/c Ratio	0.86	0.82	0.77	0.89	0.39	0.88	0.51
Control Delay (s/veh)	48.9	40.6	35.9	40.3	25.6	36.2	13.0
Queue Delay	0.4	0.3	0.0	0.0	0.0	0.4	0.0
Total Delay (s/veh)	49.3	41.0	35.9	40.3	25.6	36.6	13.0
Queue Length 50th (ft)	268	227	196	168	272	390	73
Queue Length 95th (ft)	#430	#372	317	m177	m295	#498	164
Internal Link Dist (ft)		1180			412	935	
Turn Bay Length (ft)	500		500	155			140
Base Capacity (vph)	571	562	568	554	2995	1966	741
Starvation Cap Reductn	0	0	0	0	0	0	0
Spillback Cap Reductn	11	12	0	0	0	37	0
Storage Cap Reductn	0	0	0	0	0	0	0
Reduced v/c Ratio	0.80	0.78	0.72	0.87	0.39	0.90	0.51

Intersection Summary

95th percentile volume exceeds capacity, queue may be longer.
Queue shown is maximum after two cycles.
m Volume for 95th percentile queue is metered by upstream signal.



Lane Group	EBL	EBT	EBR	NBT	NBR	SBL	SBT
Lane Group Flow (vph)	260	519	518	1337	383	535	1796
v/c Ratio	0.39	0.90	0.81	0.93	0.53	0.90	0.70
Control Delay (s/veh)	22.6	47.7	33.8	47.5	6.1	38.5	13.6
Queue Delay	0.0	0.0	0.0	0.0	0.0	0.0	0.7
Total Delay (s/veh)	22.6	47.7	33.8	47.5	6.1	38.5	14.3
Queue Length 50th (ft)	114	312	250	306	0	~148	318
Queue Length 95th (ft)	181	#525	400	#405	70	m#225	432
Internal Link Dist (ft)		1416		886			412
Turn Bay Length (ft)			450		415	155	
Base Capacity (vph)	722	622	681	1441	719	592	2548
Starvation Cap Reductn	0	0	0	0	0	0	385
Spillback Cap Reductn	0	0	0	0	0	0	0
Storage Cap Reductn	0	0	0	0	0	0	0
Reduced v/c Ratio	0.36	0.83	0.76	0.93	0.53	0.90	0.83

Intersection Summary

~ Volume exceeds capacity, queue is theoretically infinite.
Queue shown is maximum after two cycles.

95th percentile volume exceeds capacity, queue may be longer.
Queue shown is maximum after two cycles.

m Volume for 95th percentile queue is metered by upstream signal.

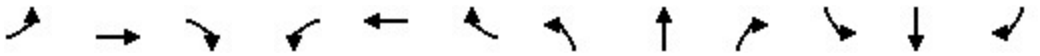

Lane Group	EBL	EBT	EBR	WBL	WBT	WBR	NBL	NBT	NBR	SBL	SBT	SBR
Lane Group Flow (vph)	465	420	491	225	232	311	290	1135	159	354	2025	465
v/c Ratio	1.21	0.43	0.88	0.73	0.26	0.58	1.11	0.68	0.26	0.87	1.08	0.54
Control Delay (s/veh)	157.8	33.5	42.4	65.1	32.5	18.8	136.9	36.3	6.0	71.1	79.8	5.2
Queue Delay	0.0	0.0	0.0	0.0	0.0	0.0	0.0	0.0	0.0	0.0	0.0	0.0
Total Delay (s/veh)	157.8	33.5	42.4	65.1	32.5	18.8	136.9	36.3	6.0	71.1	79.8	5.2
Queue Length 50th (ft)	~219	128	229	84	68	78	~128	268	0	133	~624	0
Queue Length 95th (ft)	#345	174	375	#143	101	167	#231	345	50	#232	#780	75
Internal Link Dist (ft)		2549			2428			2703			886	
Turn Bay Length (ft)	205		205	205		130	200		305	355		535
Base Capacity (vph)	385	1276	669	330	1219	653	261	1663	615	417	1880	860
Starvation Cap Reductn	0	0	0	0	0	0	0	0	0	0	0	0
Spillback Cap Reductn	0	0	0	0	0	0	0	0	0	0	0	0
Storage Cap Reductn	0	0	0	0	0	0	0	0	0	0	0	0
Reduced v/c Ratio	1.21	0.33	0.73	0.68	0.19	0.48	1.11	0.68	0.26	0.85	1.08	0.54

Intersection Summary

~ Volume exceeds capacity, queue is theoretically infinite.
Queue shown is maximum after two cycles.

95th percentile volume exceeds capacity, queue may be longer.
Queue shown is maximum after two cycles.

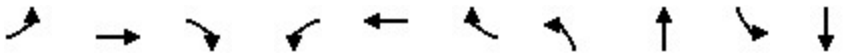

Lane Group	EBL	EBT	EBR	WBL	WBT	WBR	NBL	NBT	SBL	SBT
Lane Group Flow (vph)	74	124	177	347	89	215	32	1202	238	2046
v/c Ratio	0.38	0.47	0.46	1.38	0.20	0.40	0.37	0.95	0.80	1.10
Control Delay (s/veh)	55.4	46.4	8.3	229.2	33.8	6.7	63.4	49.6	61.1	78.2
Queue Delay	0.0	0.0	0.0	0.0	0.0	0.0	0.0	0.0	0.0	0.0
Total Delay (s/veh)	55.4	46.4	8.3	229.2	33.8	6.7	63.4	49.6	61.1	78.2
Queue Length 50th (ft)	24	78	0	~308	50	0	21	364	151	~787
Queue Length 95th (ft)	54	134	46	#577	92	56	#60	#712	261	#1164
Internal Link Dist (ft)		819			1637			2644		1335
Turn Bay Length (ft)	130			205		200	215		210	
Base Capacity (vph)	204	534	585	251	677	705	87	1265	426	1868
Starvation Cap Reductn	0	0	0	0	0	0	0	0	0	0
Spillback Cap Reductn	0	0	0	0	0	0	0	0	0	0
Storage Cap Reductn	0	0	0	0	0	0	0	0	0	0
Reduced v/c Ratio	0.36	0.23	0.30	1.38	0.13	0.30	0.37	0.95	0.56	1.10

Intersection Summary

~ Volume exceeds capacity, queue is theoretically infinite.
Queue shown is maximum after two cycles.

95th percentile volume exceeds capacity, queue may be longer.
Queue shown is maximum after two cycles.



Lane Group	WBL	WBR	NBT	NBR	SBL	SBT
Lane Group Flow (vph)	10	236	999	15	414	2037
v/c Ratio	0.04	0.55	0.75	0.03	0.80	0.80
Control Delay (s/veh)	37.3	10.4	30.2	12.9	44.3	12.3
Queue Delay	0.0	0.0	0.0	0.0	0.0	0.0
Total Delay (s/veh)	37.3	10.4	30.2	12.9	44.3	12.3
Queue Length 50th (ft)	5	0	243	1	210	279
Queue Length 95th (ft)	21	64	452	17	#460	722
Internal Link Dist (ft)	3339		1159			2644
Turn Bay Length (ft)	150			200	300	
Base Capacity (vph)	594	688	1640	724	670	3042
Starvation Cap Reductn	0	0	0	0	0	0
Spillback Cap Reductn	0	0	0	0	0	0
Storage Cap Reductn	0	0	0	0	0	0
Reduced v/c Ratio	0.02	0.34	0.61	0.02	0.62	0.67

Intersection Summary

95th percentile volume exceeds capacity, queue may be longer.
Queue shown is maximum after two cycles.

Intersection: 1: La Sierra Av. & SR-91 WB Ramps

Movement	WB	WB	WB	NB	NB	NB	NB	NB	SB	SB	SB	SB
Directions Served	L	LTR	R	L	L	T	T	T	T	T	T	R
Maximum Queue (ft)	350	389	362	220	235	236	232	232	991	968	968	190
Average Queue (ft)	212	290	232	141	170	178	179	179	949	907	813	174
95th Queue (ft)	316	372	320	197	218	228	229	234	1085	1078	1155	247
Link Distance (ft)		1183			444	444	444	444	949	949	949	
Upstream Blk Time (%)									80	13	16	
Queuing Penalty (veh)									0	0	0	
Storage Bay Dist (ft)	500		500	155								140
Storage Blk Time (%)				2	9						52	0
Queuing Penalty (veh)				4	22						190	1

Intersection: 2: La Sierra Av. & SR-91 EB Ramps

Movement	EB	EB	EB	NB	NB	NB	NB	SB	SB	SB	SB	SB
Directions Served	L	LTR	R	T	T	T	R	L	L	T	T	T
Maximum Queue (ft)	1474	1484	560	497	409	392	240	191	230	454	456	454
Average Queue (ft)	894	1052	496	301	258	255	89	106	164	233	230	248
95th Queue (ft)	1930	1836	681	481	421	404	215	171	247	449	442	459
Link Distance (ft)	1430	1430		848	848	848				444	444	444
Upstream Blk Time (%)	38	31								1	1	1
Queuing Penalty (veh)	0	0								8	4	7
Storage Bay Dist (ft)			450				415	155	155			
Storage Blk Time (%)		55	42			1		1	7	22		
Queuing Penalty (veh)		270	267			5		6	43	117		

Intersection: 3: La Sierra Av. & Indiana Av./S. Indiana Av.

Movement	EB	EB	EB	EB	EB	WB	WB	WB	WB	WB	NB	NB
Directions Served	L	L	T	T	R	L	L	T	T	R	L	L
Maximum Queue (ft)	235	265	1724	1639	407	149	162	110	162	179	221	260
Average Queue (ft)	228	261	1042	965	206	68	88	58	50	91	131	146
95th Queue (ft)	269	293	1760	1716	374	123	137	98	112	161	212	240
Link Distance (ft)			2554	2554				2432	2432			
Upstream Blk Time (%)												
Queuing Penalty (veh)												
Storage Bay Dist (ft)	205	205			205	205	205			130	200	200
Storage Blk Time (%)	29	82	1	0	10		0		0	3	4	6
Queuing Penalty (veh)	55	158	5	2	20		0		0	4	15	21

Intersection: 3: La Sierra Av. & Indiana Av./S. Indiana Av.

Movement	NB	NB	NB	NB	SB	SB	SB	SB	SB	SB
Directions Served	T	T	T	R	L	L	T	T	T	R
Maximum Queue (ft)	308	284	312	109	201	445	882	888	889	660
Average Queue (ft)	163	163	185	39	117	412	817	828	839	627
95th Queue (ft)	275	252	290	83	184	573	953	957	962	843
Link Distance (ft)	2691	2691	2691				848	848	848	
Upstream Blk Time (%)							8	9	17	
Queuing Penalty (veh)							73	86	155	
Storage Bay Dist (ft)				305	355	355				535
Storage Blk Time (%)	4		0			0	65		59	6
Queuing Penalty (veh)	12		1			0	213		251	36

Intersection: 4: La Sierra Av. & Victoria Av.

Movement	EB	EB	EB	EB	WB	WB	WB	NB	NB	NB	SB	SB
Directions Served	L	L	T	R	L	T	R	L	T	TR	L	T
Maximum Queue (ft)	41	102	155	163	305	1714	330	233	449	507	275	1433
Average Queue (ft)	12	37	75	78	304	1387	266	43	263	294	218	1141
95th Queue (ft)	38	80	133	132	305	2024	462	160	428	465	347	1712
Link Distance (ft)			852	852		1670			2639	2639		1333
Upstream Blk Time (%)						50						23
Queuing Penalty (veh)						0						294
Storage Bay Dist (ft)	130	130			205		200	215			210	
Storage Blk Time (%)		0	2		90		0	0	20		3	46
Queuing Penalty (veh)		0	2		257		1	0	6		30	104

Intersection: 4: La Sierra Av. & Victoria Av.

Movement	SB	B20	B20	B20
Directions Served	TR	T	T	
Maximum Queue (ft)	1432	2609	2612	1094
Average Queue (ft)	1143	545	567	248
95th Queue (ft)	1717	1670	1705	957
Link Distance (ft)	1333	2691	2691	2691
Upstream Blk Time (%)	24	0	0	
Queuing Penalty (veh)	307	0	0	
Storage Bay Dist (ft)				
Storage Blk Time (%)				
Queuing Penalty (veh)				

Intersection: 5: La Sierra Av. & McAllister Pkwy.

Movement	WB	WB	NB	NB	NB	SB	SB	SB
Directions Served	L	R	T	T	R	L	T	T
Maximum Queue (ft)	37	157	263	260	36	358	374	267
Average Queue (ft)	7	60	159	135	7	193	95	105
95th Queue (ft)	25	115	252	234	29	306	238	225
Link Distance (ft)		3360	1207	1207			2639	2639
Upstream Blk Time (%)								
Queuing Penalty (veh)								
Storage Bay Dist (ft)	150				200	300		
Storage Blk Time (%)		1		2		1	0	
Queuing Penalty (veh)		0		0		14	0	

Network Summary

Network wide Queuing Penalty: 3067

APPENDIX 6.3: EAPC (2030) CONDITIONS INTERSECTION OPERATIONS ANALYSIS WORKSHEETS WITH IMPROVEMENTS

This Page Intentionally Left Blank

Lane Group	WBL	WBR	NBT	SBL	SBT
Lane Configurations					
Traffic Volume (vph)	105	715	122	328	144
Future Volume (vph)	105	715	122	328	144
Turn Type	Prot	pm+ov	NA	Prot	NA
Protected Phases	8	1	2	1	6
Permitted Phases		8			
Detector Phase	8	1	2	1	6
Switch Phase					
Minimum Initial (s)	5.0	5.0	10.0	5.0	10.0
Minimum Split (s)	23.8	10.8	23.8	10.8	23.8
Total Split (s)	23.8	71.0	25.2	71.0	96.2
Total Split (%)	19.8%	59.2%	21.0%	59.2%	80.2%
Yellow Time (s)	4.8	4.8	4.8	4.8	4.8
All-Red Time (s)	1.0	1.0	1.0	1.0	1.0
Lost Time Adjust (s)	0.0	0.0	0.0	0.0	0.0
Total Lost Time (s)	5.8	5.8	5.8	5.8	5.8
Lead/Lag		Lead	Lag	Lead	
Lead-Lag Optimize?		Yes	Yes	Yes	
Recall Mode	None	None	None	None	None
Act Effct Green (s)	9.0	27.7	12.0	16.1	29.3
Actuated g/C Ratio	0.17	0.53	0.23	0.31	0.56
v/c Ratio	0.37	0.74	0.21	0.63	0.15
Control Delay (s/veh)	25.8	8.6	18.0	23.3	5.2
Queue Delay	0.0	0.0	0.0	0.0	0.0
Total Delay (s/veh)	25.8	8.6	18.0	23.3	5.2
LOS	C	A	B	C	A
Approach Delay (s/veh)	10.8		18.0		17.8
Approach LOS	B		B		B

Intersection Summary	
Cycle Length: 120	
Actuated Cycle Length: 52.4	
Natural Cycle: 70	
Control Type: Actuated-Uncoordinated	
Maximum v/c Ratio: 0.74	
Intersection Signal Delay (s/veh): 13.9	Intersection LOS: B
Intersection Capacity Utilization 62.3%	ICU Level of Service B
Analysis Period (min) 15	

Splits and Phases: 6: La Sierra Av. & El Sobrante Rd.

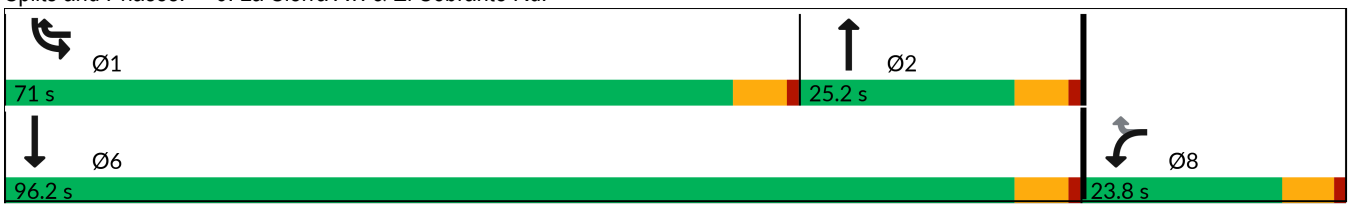



Movement	WBL	WBR	NBT	NBR	SBL	SBT
Lane Configurations						
Traffic Volume (veh/h)	105	715	122	37	328	144
Future Volume (veh/h)	105	715	122	37	328	144
Initial Q (Qb), veh	0	0	0	0	0	0
Lane Width Adj.	1.00	1.00	1.00	1.00	1.00	1.00
Ped-Bike Adj(A_pbT)	1.00	1.00		1.00	1.00	
Parking Bus, Adj	1.00	1.00	1.00	1.00	1.00	1.00
Work Zone On Approach	No		No			No
Adj Sat Flow, veh/h/ln	1870	1870	1870	1870	1870	1870
Adj Flow Rate, veh/h	111	453	128	30	345	152
Peak Hour Factor	0.95	0.95	0.95	0.95	0.95	0.95
Percent Heavy Veh, %	2	2	2	2	2	2
Cap, veh/h	456	771	501	114	411	969
Arrive On Green	0.26	0.26	0.17	0.17	0.23	0.52
Sat Flow, veh/h	1781	1585	2968	655	1781	1870
Grp Volume(v), veh/h	111	453	78	80	345	152
Grp Sat Flow(s),veh/h/ln	1781	1585	1777	1752	1781	1870
Q Serve(g_s), s	2.5	10.5	1.9	2.0	9.5	2.2
Cycle Q Clear(g_c), s	2.5	10.5	1.9	2.0	9.5	2.2
Prop In Lane	1.00	1.00		0.37	1.00	
Lane Grp Cap(c), veh/h	456	771	310	306	411	969
V/C Ratio(X)	0.24	0.59	0.25	0.26	0.84	0.16
Avail Cap(c_a), veh/h	625	922	672	663	2264	3296
HCM Platoon Ratio	1.00	1.00	1.00	1.00	1.00	1.00
Upstream Filter(I)	1.00	1.00	1.00	1.00	1.00	1.00
Uniform Delay (d), s/veh	15.1	9.5	18.3	18.3	18.8	6.5
Incr Delay (d2), s/veh	0.1	0.3	0.4	0.5	1.8	0.1
Initial Q Delay(d3), s/veh	0.0	0.0	0.0	0.0	0.0	0.0
%ile BackOfQ(50%),veh/ln	0.8	2.4	0.7	0.7	3.2	0.5
Unsig. Movement Delay, s/veh						
LnGrp Delay(d), s/veh	15.3	9.7	18.7	18.8	20.6	6.6
LnGrp LOS	B	A	B	B	C	A
Approach Vol, veh/h	564		158			497
Approach Delay, s/veh	10.8		18.7			16.3
Approach LOS	B		B			B

Timer - Assigned Phs	1	2				6	8
Phs Duration (G+Y+Rc), s	17.6	14.7				32.4	18.9
Change Period (Y+Rc), s	5.8	5.8				5.8	5.8
Max Green Setting (Gmax), s	65.2	19.4				90.4	18.0
Max Q Clear Time (g_c+I1), s	11.5	4.0				4.2	12.5
Green Ext Time (p_c), s	0.4	0.6				0.8	0.6

Intersection Summary	
HCM 7th Control Delay, s/veh	14.1
HCM 7th LOS	B

Lane Group	EBL	EBT	WBT	SBL
Lane Configurations				
Traffic Volume (vph)	55	311	683	63
Future Volume (vph)	55	311	683	63
Turn Type	Prot	NA	NA	Prot
Protected Phases	7	4	8	6
Permitted Phases				
Detector Phase	7	4	8	6
Switch Phase				
Minimum Initial (s)	5.0	10.0	10.0	5.0
Minimum Split (s)	10.8	23.8	23.8	23.8
Total Split (s)	20.0	83.0	63.0	37.0
Total Split (%)	16.7%	69.2%	52.5%	30.8%
Yellow Time (s)	3.6	4.8	4.8	3.6
All-Red Time (s)	1.0	1.0	1.0	1.0
Lost Time Adjust (s)	0.0	0.0	0.0	0.0
Total Lost Time (s)	4.6	5.8	5.8	4.6
Lead/Lag	Lead		Lag	
Lead-Lag Optimize?	Yes		Yes	
Recall Mode	None	None	None	None
Act Effct Green (s)	8.8	30.9	24.7	10.8
Actuated g/C Ratio	0.19	0.67	0.53	0.23
v/c Ratio	0.17	0.26	0.45	0.34
Control Delay (s/veh)	24.7	5.9	12.4	16.7
Queue Delay	0.0	0.0	0.0	0.0
Total Delay (s/veh)	24.7	5.9	12.4	16.7
LOS	C	A	B	B
Approach Delay (s/veh)		8.7	12.4	16.7
Approach LOS		A	B	B

Intersection Summary	
Cycle Length: 120	
Actuated Cycle Length: 46.2	
Natural Cycle: 60	
Control Type: Actuated-Uncoordinated	
Maximum v/c Ratio: 0.45	
Intersection Signal Delay (s/veh): 11.9	Intersection LOS: B
Intersection Capacity Utilization 48.0%	ICU Level of Service A
Analysis Period (min) 15	

Splits and Phases: 7: El Sobrante Rd. & McAllister St.

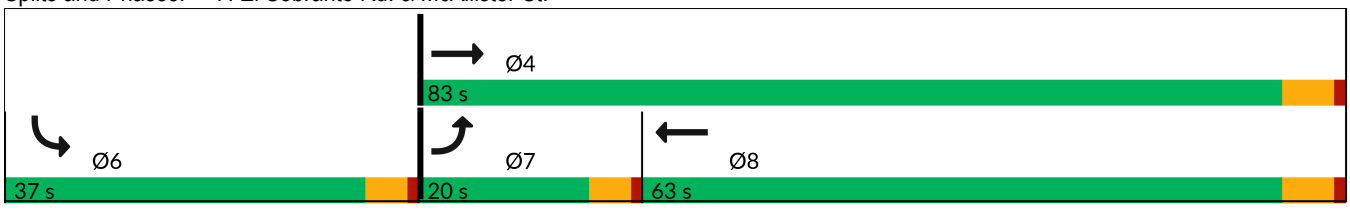

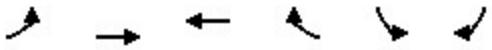

Movement	EBL	EBT	WBT	WBR	SBL	SBR
Lane Configurations						
Traffic Volume (veh/h)	55	311	683	129	63	79
Future Volume (veh/h)	55	311	683	129	63	79
Initial Q (Qb), veh	0	0	0	0	0	0
Lane Width Adj.	1.00	1.00	1.00	1.00	1.00	1.00
Ped-Bike Adj(A_pbT)	1.00			1.00	1.00	1.00
Parking Bus, Adj	1.00	1.00	1.00	1.00	1.00	1.00
Work Zone On Approach		No	No		No	
Adj Sat Flow, veh/h/ln	1870	1870	1870	1870	1870	1870
Adj Flow Rate, veh/h	57	324	711	134	66	82
Peak Hour Factor	0.96	0.96	0.96	0.96	0.96	0.96
Percent Heavy Veh, %	2	2	2	2	2	2
Cap, veh/h	108	1103	1196	225	88	109
Arrive On Green	0.06	0.59	0.40	0.40	0.12	0.12
Sat Flow, veh/h	1781	1870	3077	562	739	918
Grp Volume(v), veh/h	57	324	423	422	149	0
Grp Sat Flow(s),veh/h/ln	1781	1870	1777	1769	1668	0
Q Serve(g_s), s	1.1	3.1	6.7	6.7	3.1	0.0
Cycle Q Clear(g_c), s	1.1	3.1	6.7	6.7	3.1	0.0
Prop In Lane	1.00			0.32	0.44	0.55
Lane Grp Cap(c), veh/h	108	1103	712	709	198	0
V/C Ratio(X)	0.53	0.29	0.59	0.60	0.75	0.00
Avail Cap(c_a), veh/h	768	4044	2847	2834	1514	0
HCM Platoon Ratio	1.00	1.00	1.00	1.00	1.00	1.00
Upstream Filter(I)	1.00	1.00	1.00	1.00	1.00	0.00
Uniform Delay (d), s/veh	16.3	3.6	8.4	8.4	15.2	0.0
Incr Delay (d2), s/veh	4.0	0.1	0.8	0.8	5.7	0.0
Initial Q Delay(d3), s/veh	0.0	0.0	0.0	0.0	0.0	0.0
%ile BackOfQ(50%),veh/ln	0.5	0.2	1.5	1.5	1.2	0.0
Unsig. Movement Delay, s/veh						
LnGrp Delay(d), s/veh	20.3	3.8	9.2	9.2	20.9	0.0
LnGrp LOS	C	A	A	A	C	
Approach Vol, veh/h		381	845		149	
Approach Delay, s/veh		6.2	9.2		20.9	
Approach LOS		A	A		C	

Timer - Assigned Phs	4	6	7	8
Phs Duration (G+Y+Rc), s	26.9	8.8	6.8	20.1
Change Period (Y+Rc), s	5.8	4.6	4.6	5.8
Max Green Setting (Gmax), s	77.2	32.4	15.4	57.2
Max Q Clear Time (g_c+I1), s	5.1	5.1	3.1	8.7
Green Ext Time (p_c), s	1.9	0.4	0.1	5.6

Intersection Summary	
HCM 7th Control Delay, s/veh	9.7
HCM 7th LOS	A

Lane Group	WBL	WBR	NBT	SBL	SBT
Lane Configurations					
Traffic Volume (vph)	107	479	250	927	534
Future Volume (vph)	107	479	250	927	534
Turn Type	Prot	pm+ov	NA	Prot	NA
Protected Phases	8	1	2	1	6
Permitted Phases		8			
Detector Phase	8	1	2	1	6
Switch Phase					
Minimum Initial (s)	10.0	5.0	10.0	5.0	10.0
Minimum Split (s)	23.8	10.8	23.8	10.8	23.8
Total Split (s)	23.8	72.0	24.2	72.0	96.2
Total Split (%)	19.8%	60.0%	20.2%	60.0%	80.2%
Yellow Time (s)	4.8	3.6	4.8	3.6	4.8
All-Red Time (s)	1.0	1.0	1.0	1.0	1.0
Lost Time Adjust (s)	0.0	0.0	0.0	0.0	0.0
Total Lost Time (s)	5.8	4.6	5.8	4.6	5.8
Lead/Lag		Lead	Lag	Lead	
Lead-Lag Optimize?		Yes	Yes	Yes	
Recall Mode	None	None	None	None	None
Act Effct Green (s)	13.1	86.1	16.0	67.2	87.8
Actuated g/C Ratio	0.12	0.77	0.14	0.60	0.78
v/c Ratio	0.56	0.42	0.78	0.94	0.40
Control Delay (s/veh)	58.3	4.7	49.1	39.9	5.1
Queue Delay	0.0	0.0	0.0	0.0	0.0
Total Delay (s/veh)	58.3	4.7	49.1	39.9	5.1
LOS	E	A	D	D	A
Approach Delay (s/veh)	14.5		49.1		27.2
Approach LOS	B		D		C

Intersection Summary	
Cycle Length: 120	
Actuated Cycle Length: 112.5	
Natural Cycle: 120	
Control Type: Actuated-Uncoordinated	
Maximum v/c Ratio: 0.94	
Intersection Signal Delay (s/veh): 27.7	Intersection LOS: C
Intersection Capacity Utilization 84.6%	ICU Level of Service E
Analysis Period (min) 15	

Splits and Phases: 6: La Sierra Av. & El Sobrante Rd.

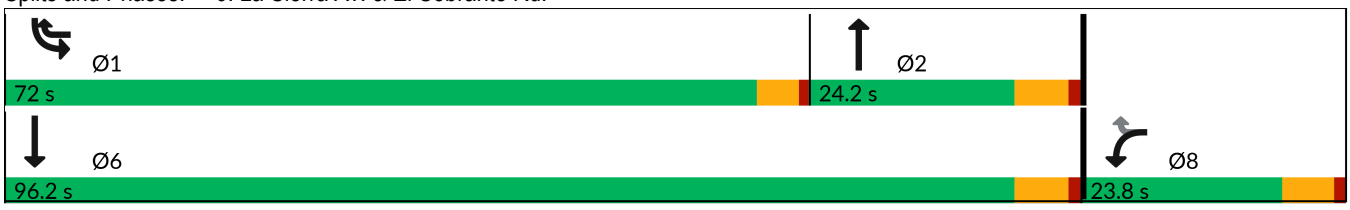



Movement	WBL	WBR	NBT	NBR	SBL	SBT
Lane Configurations						
Traffic Volume (veh/h)	107	479	250	139	927	534
Future Volume (veh/h)	107	479	250	139	927	534
Initial Q (Qb), veh	0	0	0	0	0	0
Lane Width Adj.	1.00	1.00	1.00	1.00	1.00	1.00
Ped-Bike Adj(A_pbT)	1.00	1.00		1.00	1.00	
Parking Bus, Adj	1.00	1.00	1.00	1.00	1.00	1.00
Work Zone On Approach	No		No			No
Adj Sat Flow, veh/h/ln	1870	1870	1870	1870	1870	1870
Adj Flow Rate, veh/h	115	316	269	111	997	574
Peak Hour Factor	0.93	0.93	0.93	0.93	0.93	0.93
Percent Heavy Veh, %	2	2	2	2	2	2
Cap, veh/h	196	1088	346	139	1027	1433
Arrive On Green	0.11	0.11	0.14	0.14	0.58	0.77
Sat Flow, veh/h	1781	1585	2567	995	1781	1870
Grp Volume(v), veh/h	115	316	191	189	997	574
Grp Sat Flow(s),veh/h/ln	1781	1585	1777	1691	1781	1870
Q Serve(g_s), s	5.7	7.3	9.7	10.1	50.2	9.7
Cycle Q Clear(g_c), s	5.7	7.3	9.7	10.1	50.2	9.7
Prop In Lane	1.00	1.00		0.59	1.00	
Lane Grp Cap(c), veh/h	196	1088	249	237	1027	1433
V/C Ratio(X)	0.59	0.29	0.77	0.80	0.97	0.40
Avail Cap(c_a), veh/h	343	1220	350	333	1286	1811
HCM Platoon Ratio	1.00	1.00	1.00	1.00	1.00	1.00
Upstream Filter(I)	1.00	1.00	1.00	1.00	1.00	1.00
Uniform Delay (d), s/veh	39.6	5.7	38.7	38.9	19.0	3.7
Incr Delay (d2), s/veh	2.8	0.1	6.5	8.7	15.6	0.2
Initial Q Delay(d3), s/veh	0.0	0.0	0.0	0.0	0.0	0.0
%ile BackOfQ(50%),veh/ln	2.6	1.9	4.4	4.5	20.3	1.8
Unsig. Movement Delay, s/veh						
LnGrp Delay(d), s/veh	42.4	5.9	45.2	47.6	34.6	3.9
LnGrp LOS	D	A	D	D	C	A
Approach Vol, veh/h	431		380			1571
Approach Delay, s/veh	15.6		46.4			23.3
Approach LOS	B		D			C

Timer - Assigned Phs	1	2				6	8
Phs Duration (G+Y+Rc), s	58.5	18.9				77.3	16.0
Change Period (Y+Rc), s	4.6	5.8				5.8	5.8
Max Green Setting (Gmax), s	67.4	18.4				90.4	18.0
Max Q Clear Time (g_c+I1), s	52.2	12.1				11.7	9.3
Green Ext Time (p_c), s	1.6	1.0				3.5	1.0

Intersection Summary	
HCM 7th Control Delay, s/veh	25.6
HCM 7th LOS	C

Notes

User approved pedestrian interval to be less than phase max green.

Lane Group	EBL	EBT	WBT	SBL
Lane Configurations				
Traffic Volume (vph)	68	938	447	71
Future Volume (vph)	68	938	447	71
Turn Type	Prot	NA	NA	Prot
Protected Phases	7	4	8	6
Permitted Phases				
Detector Phase	7	4	8	6
Switch Phase				
Minimum Initial (s)	5.0	10.0	10.0	5.0
Minimum Split (s)	10.8	23.8	23.8	23.8
Total Split (s)	16.0	92.0	76.0	28.0
Total Split (%)	13.3%	76.7%	63.3%	23.3%
Yellow Time (s)	3.6	4.8	4.8	3.6
All-Red Time (s)	1.0	1.0	1.0	1.0
Lost Time Adjust (s)	0.0	0.0	0.0	0.0
Total Lost Time (s)	4.6	5.8	5.8	4.6
Lead/Lag	Lead		Lag	
Lead-Lag Optimize?	Yes		Yes	
Recall Mode	None	None	None	None
Act Effct Green (s)	8.9	43.9	33.4	12.5
Actuated g/C Ratio	0.13	0.64	0.49	0.18
v/c Ratio	0.31	0.83	0.31	0.57
Control Delay (s/veh)	38.7	16.3	11.3	28.3
Queue Delay	0.0	0.0	0.0	0.0
Total Delay (s/veh)	38.7	16.3	11.3	28.3
LOS	D	B	B	C
Approach Delay (s/veh)		17.8	11.3	28.3
Approach LOS		B	B	C

Intersection Summary	
Cycle Length: 120	
Actuated Cycle Length: 68.1	
Natural Cycle: 75	
Control Type: Actuated-Uncoordinated	
Maximum v/c Ratio: 0.83	
Intersection Signal Delay (s/veh): 17.0	Intersection LOS: B
Intersection Capacity Utilization 69.2%	ICU Level of Service C
Analysis Period (min) 15	

Splits and Phases: 7: El Sobrante Rd. & McAllister St.

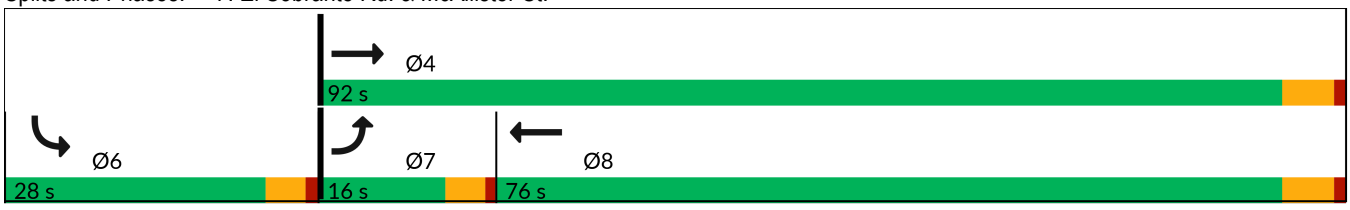

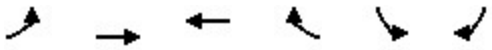

Movement	EBL	EBT	WBT	WBR	SBL	SBR
Lane Configurations						
Traffic Volume (veh/h)	68	938	447	52	71	118
Future Volume (veh/h)	68	938	447	52	71	118
Initial Q (Qb), veh	0	0	0	0	0	0
Lane Width Adj.	1.00	1.00	1.00	1.00	1.00	1.00
Ped-Bike Adj(A_pbT)	1.00			1.00	1.00	1.00
Parking Bus, Adj	1.00	1.00	1.00	1.00	1.00	1.00
Work Zone On Approach		No	No		No	
Adj Sat Flow, veh/h/ln	1870	1870	1870	1870	1870	1870
Adj Flow Rate, veh/h	72	998	476	55	76	126
Peak Hour Factor	0.94	0.94	0.94	0.94	0.94	0.94
Percent Heavy Veh, %	2	2	2	2	2	2
Cap, veh/h	111	1198	1568	180	97	161
Arrive On Green	0.06	0.64	0.49	0.49	0.16	0.16
Sat Flow, veh/h	1781	1870	3305	370	619	1027
Grp Volume(v), veh/h	72	998	263	268	203	0
Grp Sat Flow(s),veh/h/ln	1781	1870	1777	1804	1655	0
Q Serve(g_s), s	2.0	21.1	4.6	4.6	6.1	0.0
Cycle Q Clear(g_c), s	2.0	21.1	4.6	4.6	6.1	0.0
Prop In Lane	1.00			0.20	0.37	0.62
Lane Grp Cap(c), veh/h	111	1198	868	881	260	0
V/C Ratio(X)	0.65	0.83	0.30	0.30	0.78	0.00
Avail Cap(c_a), veh/h	395	3139	2428	2465	754	0
HCM Platoon Ratio	1.00	1.00	1.00	1.00	1.00	1.00
Upstream Filter(I)	1.00	1.00	1.00	1.00	1.00	0.00
Uniform Delay (d), s/veh	23.5	7.1	7.9	7.9	20.8	0.0
Incr Delay (d2), s/veh	6.2	1.6	0.2	0.2	5.1	0.0
Initial Q Delay(d3), s/veh	0.0	0.0	0.0	0.0	0.0	0.0
%ile BackOfQ(50%),veh/ln	0.9	3.9	1.2	1.2	2.3	0.0
Unsig. Movement Delay, s/veh						
LnGrp Delay(d), s/veh	29.7	8.7	8.1	8.1	25.8	0.0
LnGrp LOS	C	A	A	A	C	
Approach Vol, veh/h		1070	531		203	
Approach Delay, s/veh		10.1	8.1		25.8	
Approach LOS		B	A		C	

Timer - Assigned Phs			4		6	7	8
Phs Duration (G+Y+Rc), s			38.7		12.7	7.8	30.9
Change Period (Y+Rc), s			5.8		4.6	4.6	5.8
Max Green Setting (Gmax), s			86.2		23.4	11.4	70.2
Max Q Clear Time (g_c+I1), s			23.1		8.1	4.0	6.6
Green Ext Time (p_c), s			9.8		0.5	0.1	3.1

Intersection Summary	
HCM 7th Control Delay, s/veh	11.3
HCM 7th LOS	B