APPENDIX E
Hydrology Report/WQMP

PRELIMINARY HYDROLOGY & HYDRAULICS STUDY

for 201 S. Mountain View Street & 4320 W. 1st Street Tentative Tract No. 19391

In the City of Santa Ana, California

Prepared For:

Storm Properties
Alan Kwan
970 W. 190th Street #995
Torrance, Ca 90502
(310) 986-2128

Prepared By:

C&V Consulting, Inc.
9830 Irvine Center Drive
Irvine, CA 92618
Dane McDougall, P.E., P.L.S.
(949) 916-3800

June 2025

TABLE OF CONTENTS

1.0 SITE DESCRIPTION 1
2.0 PURPOSE OF STUDY 1
3.0 EXISTING DRAINAGE PATTERN 1
4.0 PROPOSED DRAINAGE PATTERN 1
5.0 METHODOLOGY 2
6.0 RESULTS 2
7.0 CONCLUSION 3
8.0 DESIGN ASSUMPTIONS 3
9.0 REFERENCES 4

APPENDIX A: Hydrology Maps
Existing Conditions Hydrology Map
Proposed Conditions Hydrology Map

APPENDIX B: Hydrology Calculations
Existing 25- & 100-Year Hydrology Calculations
Proposed 25- & 100-Year Hydrology Calculations

APPENDIX C: Hydraulic Calculations
Catch Basin Sizing
Parkway Drain Sizing
100-Year Water Surface Elevation
WSPG Calculations

APPENDIX D: Reference Material
NRCS Hydrologic Soils Group TGD Figure
OCFCD Facilities Maps

APPENDIX E: Tentative Tract Map No. 19391

Preliminary Hydrology & Hydraulics Study
For
201 S. Mountain View Street &
4320 W. 1st Street
Tentative Tract No. 19391

ACKNOWLEDGEMENT AND SIGNATURE PAGE

This Preliminary Hydrology & Hydraulics Study was prepared by C&V Consulting, Inc. under the supervision of Dane McDougall, P.E.

_____ _____

Dane McDougall, P.E. 80705 Date
C&V Consulting, Inc.

1.0 Site Introduction

The project site comprises approximately 2.5 gross acres (2.539 ac net) and is located at 4320 W. First Street and 201 S. Mountain View Street in the City of Santa Ana, California (APN: 188-021-10, 188-021-11, & 188-021-12). The site is bounded by W. 1st Street to the north, S. Mountain View Street to the west, the Santa Ana Public Works Agency West Pumping Station to the south, and the Parkside Court Apartments to the east. Currently the site is accessed by one (1) driveway along W. 1st Street and one (1) driveway along S. Mountain View Street. The existing site is occupied by a commercial building and associated parking lot. These items can be seen via historical aerial maps as early as June 2002. All onsite buildings and pavement will be demolished prior to the construction of the proposed development. All existing utilities will be cut and capped at the right of way. Existing pervious cover is approximately 7%.

The proposed development will consist of 9 multifamily residential buildings totaling 60 units with associated drive aisles, parking, open space recreational area, landscaping, and a driveway entrance off of S. Mountain View Street.

2.0 Purpose of Study

The study quantifies the estimated amount of storm water run-off generated from the project in the existing and proposed conditions of the project site and determines whether detention will be required to mitigate an increase in peak runoff. The existing and proposed conditions of the site will be analyzed and compared for the 25- and 100-year storm events.

3.0 Existing Drainage Pattern

The existing site is generally split in half in regards to grading and drainage with a slight ridge in the middle of the site running in the east west direction. The northern portion of the site is graded so that runoff flows to two (2) concrete swales, each having a drain inlet at the more northern end of them. The southern portion of the site drains to a centrally located concrete swale, also with a drain inlet in it. W. 1st Street fronts northern property line and slopes from east to west. It is likely that onsite flows surface flow west to S. Mountain View Street and then into W 1st Street. Runoff entering W. 1st Street flows via curb and gutter to the west until it enters a catch basin, approximately 280' west of the site at the southeastern corner of Newhope and 1st Street. Runoff continues into an underground 60-inch reinforced concrete pipe (RCP) that is maintained by the city of Santa Ana. Flows are conveyed in this pipe and are discharged into the East Garden Grove Wintersburg Channel just west of Andres Place. Runoff continues in the channel until discharging into the Pacific Ocean.

This site is located within Watershed C Los Alamitos East Garden Grove Bolsa Chica Watershed per the Orange County Flood Control District (OCFCD) Drainage System Map.

According to the Federal Emergency Management Agency (FEMA), FIRM rate map Number 06059C0256J, revised December 3, 2009, the site is located within the flood zone as follows: Zone A – No base flood elevations determined."

There is no offsite drainage entering the project site.

Refer to Appendix A for the Existing Conditions Hydrology Map.

4.0 Proposed Drainage Pattern

In the proposed condition, site runoff will be captured by four (4) proposed sump curb inlet catch basins. Low flows will be conveyed via dvert pipes into nearby modular wetland units for water quality treatment. When the water quality treatment flow rate is exceeded, runoff will be directed through the proposed underground storm drain system. The modular wetland units will also be equipped with internal bypass for flows that exceed the treatment flow rate. Onsite runoff will be discharged into S. Mountain View Street via Storm Drain Sump Pump through a proposed parkway drain.

Water surface elevations will be analyzed to verify that all habitable structures will have at least 1' freeboard during the 100-year storm event.

5.0 Methodology

All drainage subareas were analyzed using the County of Orange Local Drainage and Hydrology Manual and the Civil Design Software. Each subarea was analyzed for acreage, land-use, peak flow rates, and time of concentrations according to the Rational Method. The impervious coverage for Commercial Land Use was utilized for the existing and Condominium Residential land use was utilized for the proposed development conditions.

In accordance with the Orange County Hydrology Manual, all habitable structures must have a finished floor elevation to allow 1' freeboard during the 100-year storm event analyzed at low-points throughout the proposed site. Curb inlet catch basins and onsite conveyance pipes have been sized to convey runoff from the 25-year storm event. 100-year water surface elevations have been analyzed to verify freeboard conditions and designed finish floor elevations.

Hydrology calculations are located within Appendix B.

6.0 Results

The results from this hydrology and hydraulic analysis demonstrate the following:

- The drainage design for this site meets or exceeds the requirements as described in the Orange County Hydrology Manual
- Flow rates have decreased in the proposed developed condition from the existing condition due to the increase in pervious area

The existing and proposed conditions peak flowrates and times of concentration are summarized in the table below.

Hydrology Calculations

Pre Development					
DMA	Area (AC)	Q10 (cfs)	Q25 (cfs)	Q100 (cfs)	Tc (min)
X1	1.31	4.05	4.83	6.20	6.56
X2	1.23	3.41	4.08	5.23	7.90
Total	2.54	7.46	8.91	11.42	
Post Development					
	Area (AC)	Q10 (cfs)	Q25 (cfs)	Q100 (cfs)	Tc (min)
P1	0.25	0.829	0.992	1.281	5.54
P2	2.29	6.113	7.406	9.658	7.45
Total	2.57	6.942	8.398	10.939	

Catch Basin Sizing
Catch basin sizing will be analyzed for the 25-year storm event based on a sump design during final engineering.

100-Year Water Surface Elevation
Proposed finished floors will be set at least 1' above the 100-year water surface elevation in the proposed drive aisles. Water Surface Elevation will be verified during Final Engineering

Parkway Culvert Sizing
Parkway Drain sizing will be analyzed for the 100-year storm event during final engineering.

Stormwater Sump Pump Sizing
Stormwater sump pump sizing will be analyzed during final engineering.

7.0 Conclusion

The results from this hydrology and hydraulics study utilizing methods provided by Orange County demonstrate that the proposed condition of the site generates a decrease in site runoff compared to the existing condition.

The proposed development has been designed with four sump curb inlet catch basins. The catch basins will be equipped with dvert pipes to route low flows to nearby Modular Wetland Biofiltration Vaults for water quality treatment. Treated stormwater runoff will be conveyed through the site in an underground storm drain system into a proposed stormwater sump pump which will discharge runoff through a parkway drain into the public right-of-way of S. Mountain View Street.

In the event that the onsite storm drain system becomes clogged, runoff will pond at the project entry and overtop the proposed sidewalk and driveway and enter the right-of-way of S. Mountain View Street and follow historic drainage patterns.

8.0 Design Assumptions

1. The property is in the City of Santa Ana, Orange County.
2. 100-year storm event flood level protection analysis required for habitable structures per the requirements of the Orange County Hydrology Manual.
3. The existing condition utilized commercial, and the proposed condition utilized condominium land uses within the Civil Design Software for the hydrologic calculations.
4. Hydrologic Soil Classification "A" based on the NRCS Hydrologic Soils Groups per the Orange County Technical Guidance Document (TGD), Figure XVI-2a.

9.0 References

1. Orange County Hydrology Manual 1986
2. Orange County Local Drainage Manual January 1996
3. Orange County Flood Control District Design Manual 2000
4. Orange County Drainage Facilities Map
5. Orange County Technical Guidance Document (TGD), 2013
6. CivilCADD/ Civildesign Engineering Software 1989-2019 Version 9.1
7. Vesting Tentative Tract Map No. 19391 and Preliminary WQMP prepared by C&V Consulting, Inc., dated June 2025

Appendix A

Hydrology Maps

Existing Conditions Hydrology Map

PRE DEVELOPMENT HYDROLOGY MAP

4320 WEST FIRST STREET AND 201 S. MOUNTAIN VIEW STREET
CITY OF SANTA ANA, COUNTY OF ORANGE
STATE OF CALIFORNIA

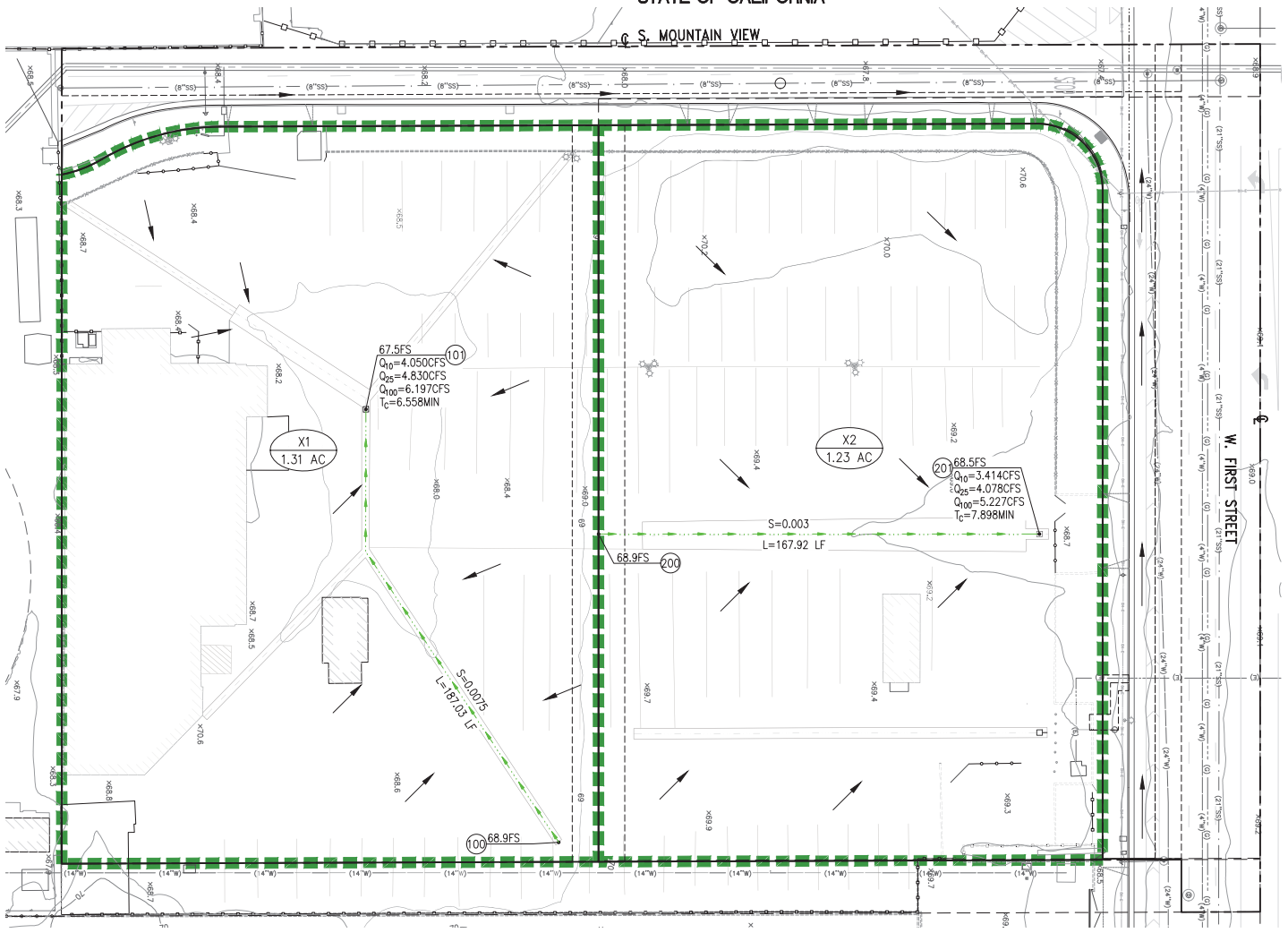

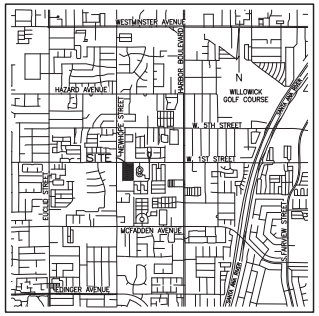

VICINITY MAP
N.T.S.

LEGEND

- EXISTING RIGHT-OF-WAY/ BOUNDARY
- DRAINAGE AREA BOUNDARY
- DRAINAGE SUB AREA BOUNDARY
- LONGEST FLOW PATH
- FLOW DIRECTION
- XX — DRAINAGE AREA ID
- X.XX AC — DRAINAGE AREA IN ACRES
- INITIAL SUBAREA NODE
- (00.0) FS — SPOT ELEVATION
- QPEAK=X.XX CFS — PEAK RUNOFF (CFS)
- TC=X.X MIN — TIME OF CONCENTRATION (MIN)

INFILTRATION FEASIBILITY CONSTRAINTS

- SHALLOW GROUNDWATER MAKES INFILTRATION INFEASIBLE

SITE INFORMATION

DMA	AREA (AC)	Q10(cfs)	Q25(cfs)	Q100(cfs)	Tc (MIN)
X1	1.31	4.05	4.83	6.20	6.56
X2	1.23	3.41	4.08	5.23	7.90
TOTAL	2.54	7.46	8.91	11.42	

1" = 20'
0 10 20 40

PLANS PREPARED BY:
CONSULTING, INC.
CIVIL ENGINEERING
LAND PLANNING SURVEYING

PRE DEVELOPMENT HYDROLOGY MAP
4320 W FIRST STREET AND 201 S. MOUNTAIN VIEW STREET
SANTA ANA, CA

PUBLIC WORKS AGENCY
CITY OF SANTA ANA

SHEET 1 OF 1

Proposed Conditions Hydrology Map

POST DEVELOPMENT HYDROLOGY MAP

4320 WEST FIRST STREET AND 201 S. MOUNTAIN VIEW STREET
CITY OF SANTA ANA, COUNTY OF ORANGE
STATE OF CALIFORNIA

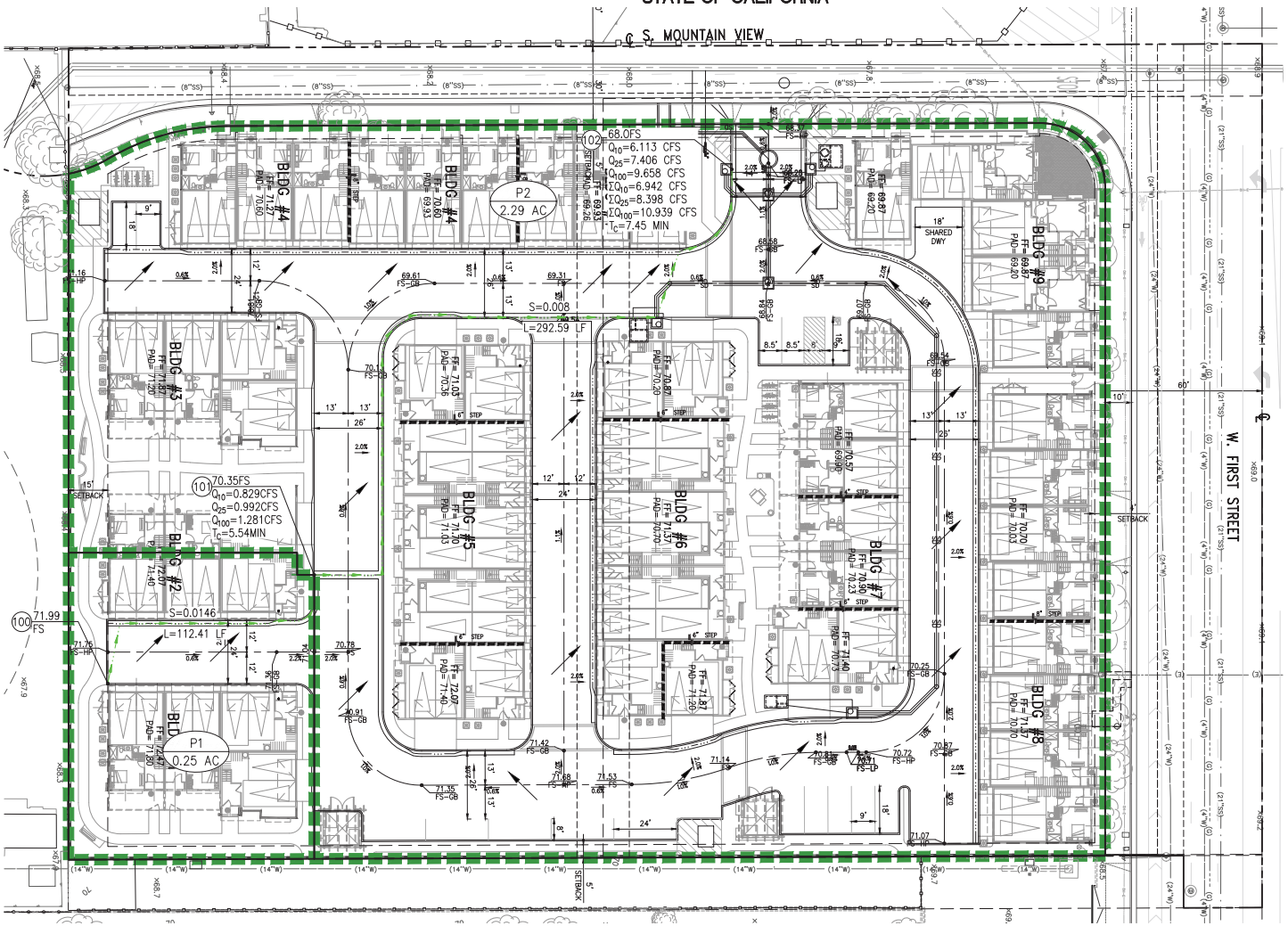

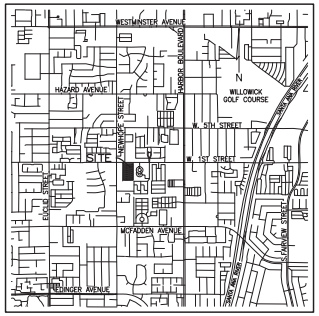

VICINITY MAP
N.T.S.

LEGEND

- EXISTING RIGHT-OF-WAY/ BOUNDARY
- DRAINAGE AREA BOUNDARY
- DRAINAGE SUB AREA BOUNDARY
- LONGEST FLOW PATH
- FLOW DIRECTION
- XX / X.XX AC — DRAINAGE AREA ID / DRAINAGE AREA IN ACRES
- (00.0) FS — INITIAL SUBAREA NODE / SPOT ELEVATION
- Q100 = X.XX CFS — PEAK RUNOFF (CFS)
- Tc = X.X MIN — TIME OF CONCENTRATION (MIN)

SITE INFORMATION

DMA	AREA (AC)	Q10(cfs)	Q25(cfs)	Q100(cfs)	Tc (MIN)
P1	0.25	0.83	0.99	1.28	5.54
P2	2.29	6.11	7.41	9.66	7.45
TOTAL	2.54	6.94	8.40	10.94	

1" = 20'
0 10 20 40

PLANS PREPARED BY:
CONSULTING, INC.
CIVIL ENGINEERING
LAND PLANNING SURVEYING

POST DEVELOPMENT HYDROLOGY MAP
4320 W FIRST STREET AND 201 S. MOUNTAIN VIEW STREET
SANTA ANA, CA

PUBLIC WORKS AGENCY
CITY OF SANTA ANA

SHEET 1 OF 1

Appendix B

Hydrology Calculations

Existing 10-, 25-, & 100-Year Hydrology Calculations

Orange County Rational Hydrology Program

(Hydrology Manual Date(s) October 1986 & November 1996)

CIVILCADD/CIVILDESIGN Engineering Software, (c) 1989-2018 Version 9.0
Rational Hydrology Study, Date: 06/03/25 File Name: STRM5X10.roc

---

TTM 19391
STRM-005
PRELIMINARY
EXISTING Q10

Program License Serial Number 6677

********* Hydrology Study Control Information **********

Rational hydrology study storm event year is 10.0

Decimal fraction of study above 2000 ft., 600M = 0.0000
English Units Used for input data

++

Process from Point/Station 100.000 to Point/Station 101.000
**** INITIAL AREA EVALUATION ****

SCS curve number for soil(AMC 2) = 32.00
Pervious ratio(Ap) = 0.1000 Max loss rate(Fp)= 0.400(In/Hr)
Max Catchment Loss (Fm) = 0.040(In/Hr)
Initial subarea data:
Initial area flow distance = 187.030(Ft.)
Top (of initial area) elevation = 68.900(Ft.)
Bottom (of initial area) elevation = 67.500(Ft.)
Difference in elevation = 1.400(Ft.)
Slope = 0.00749 s(%)= 0.75
TC = k(0.304)*[(length^3)/(elevation change)]^0.2
Initial area time of concentration = 6.558 min.
Rainfall intensity = 3.475(In/Hr) for a 10.0 year storm
Effective runoff coefficient used for area (Q=KCIA) is C = 0.890
Subarea runoff = 4.050(CFS)
Total initial stream area = 1.310(Ac.)

```
++++++++++++++++++++++++++++++++++++++++++++++++++++++++++++++++++++++++
Process from Point/Station      200.000 to Point/Station      201.000
**** INITIAL AREA EVALUATION ****
________________________________________________________________________
SCS curve number for soil(AMC 2)  = 32.00
Pervious ratio(Ap) = 0.1000  Max loss rate(Fp)=     0.400(In/Hr)
Max Catchment Loss (Fm) =     0.040(In/Hr)
Initial subarea data:
Initial area flow distance =   167.920(Ft.)
Top (of initial area) elevation =    68.900(Ft.)
Bottom (of initial area) elevation =    68.500(Ft.)
Difference in elevation =     0.400(Ft.)
Slope =    0.00238  s(%)=       0.24
TC = k(0.304)*[(length^3)/(elevation change)]^0.2
Initial area time of concentration =    7.898 min.
Rainfall intensity =      3.124(In/Hr) for a    10.0 year storm
Effective runoff coefficient used for area (Q=KCIA) is C = 0.888
Subarea runoff =      3.414(CFS)
Total initial stream area =        1.230(Ac.)
End of computations, total study area =            2.54 (Ac.)
The following figures may
be used for a unit hydrograph study of the same area.
Note: These figures do not consider reduced effective area
effects caused by confluences in the rational equation.

Area averaged pervious area fraction(Ap) = 0.100
Area averaged SCS curve number (AMC 2) =  32.0
```

Orange County Rational Hydrology Program

(Hydrology Manual Date(s) October 1986 & November 1996)

CIVILCADD/CIVILDESIGN Engineering Software, (c) 1989-2018 Version 9.0
Rational Hydrology Study, Date: 06/03/25 File Name: STRM5X25.roc

---

TTM 19391
STRM-005
PRELIMINARY
EXISTING Q25

Program License Serial Number 6677

********* Hydrology Study Control Information **********

Rational hydrology study storm event year is 25.0

Decimal fraction of study above 2000 ft., 600M = 0.0000
English Units Used for input data

++

Process from Point/Station 100.000 to Point/Station 101.000
**** INITIAL AREA EVALUATION ****

COMMERCIAL subarea type
Decimal fraction soil group A = 1.000
Decimal fraction soil group B = 0.000
Decimal fraction soil group C = 0.000
Decimal fraction soil group D = 0.000
SCS curve number for soil(AMC 2) = 32.00
Pervious ratio(Ap) = 0.1000 Max loss rate(Fp)= 0.400(In/Hr)
Max Catchment Loss (Fm) = 0.040(In/Hr)
Initial subarea data:
Initial area flow distance = 187.030(Ft.)
Top (of initial area) elevation = 68.900(Ft.)
Bottom (of initial area) elevation = 67.500(Ft.)
Difference in elevation = 1.400(Ft.)
Slope = 0.00749 s(%)= 0.75
TC = k(0.304)*[(length^3)/(elevation change)]^0.2
Initial area time of concentration = 6.558 min.
Rainfall intensity = 4.137(In/Hr) for a 25.0 year storm

```
Effective runoff coefficient used for area (Q=KCIA) is C = 0.891
Subarea runoff =      4.830(CFS)
Total initial stream area =        1.310(Ac.)
```

↟

```
++++++++++++++++++++++++++++++++++++++++++++++++++++++++++++++++++++++++
Process from Point/Station      200.000 to Point/Station      201.000
**** INITIAL AREA EVALUATION ****
________________________________________________________________________
SCS curve number for soil(AMC 2)  = 32.00
Pervious ratio(Ap) = 0.1000  Max loss rate(Fp)=     0.400(In/Hr)
Max Catchment Loss (Fm) =     0.040(In/Hr)
Initial subarea data:
Initial area flow distance =   167.920(Ft.)
Top (of initial area) elevation =    68.900(Ft.)
Bottom (of initial area) elevation =    68.500(Ft.)
Difference in elevation =     0.400(Ft.)
Slope =    0.00238  s(%)=       0.24
TC = k(0.304)*[(length^3)/(elevation change)]^0.2
Initial area time of concentration =    7.898 min.
Rainfall intensity =      3.724(In/Hr) for a    25.0 year storm
Effective runoff coefficient used for area (Q=KCIA) is C = 0.890
Subarea runoff =      4.078(CFS)
Total initial stream area =        1.230(Ac.)
End of computations, total study area =            2.54 (Ac.)
The following figures may
be used for a unit hydrograph study of the same area.
Note: These figures do not consider reduced effective area
effects caused by confluences in the rational equation.

Area averaged pervious area fraction(Ap) = 0.100
Area averaged SCS curve number (AMC 2) =  32.0
```

Orange County Rational Hydrology Program

(Hydrology Manual Date(s) October 1986 & November 1996)

CIVILCADD/CIVILDESIGN Engineering Software, (c) 1989-2018 Version 9.0
Rational Hydrology Study, Date: 06/03/25 File Name: STRM5X100.roc

---

TTM 19391
STRM-005
PRELIMINARY
EXISTING Q100

Program License Serial Number 6677

********* Hydrology Study Control Information **********

Rational hydrology study storm event year is 100.0

Decimal fraction of study above 2000 ft., 600M = 0.0000
English Units Used for input data

++

Process from Point/Station 100.000 to Point/Station 101.000
**** INITIAL AREA EVALUATION ****

COMMERCIAL subarea type
Decimal fraction soil group A = 1.000
Decimal fraction soil group B = 0.000
Decimal fraction soil group C = 0.000
Decimal fraction soil group D = 0.000
SCS curve number for soil(AMC 2) = 32.00
Pervious ratio(Ap) = 0.1000 Max loss rate(Fp)= 0.400(In/Hr)
Max Catchment Loss (Fm) = 0.040(In/Hr)
Initial subarea data:
Initial area flow distance = 187.030(Ft.)
Top (of initial area) elevation = 68.900(Ft.)
Bottom (of initial area) elevation = 67.500(Ft.)
Difference in elevation = 1.400(Ft.)
Slope = 0.00749 s(%)= 0.75
TC = k(0.304)*[(length^3)/(elevation change)]^0.2
Initial area time of concentration = 6.558 min.
Rainfall intensity = 5.296(In/Hr) for a 100.0 year storm

```
Effective runoff coefficient used for area (Q=KCIA) is C = 0.893
Subarea runoff =      6.197(CFS)
Total initial stream area =        1.310(Ac.)
```



```
++++++++++++++++++++++++++++++++++++++++++++++++++++++++++++++++++++++++
Process from Point/Station      200.000 to Point/Station      201.000
**** INITIAL AREA EVALUATION ****
________________________________________________________________________
SCS curve number for soil(AMC 2)  = 32.00
Pervious ratio(Ap) = 0.1000  Max loss rate(Fp)=     0.400(In/Hr)
Max Catchment Loss (Fm) =     0.040(In/Hr)
Initial subarea data:
Initial area flow distance =   167.920(Ft.)
Top (of initial area) elevation =    68.900(Ft.)
Bottom (of initial area) elevation =    68.500(Ft.)
Difference in elevation =     0.400(Ft.)
Slope =    0.00238  s(%)=       0.24
TC = k(0.304)*[(length^3)/(elevation change)]^0.2
Initial area time of concentration =    7.898 min.
Rainfall intensity =      4.761(In/Hr) for a   100.0 year storm
Effective runoff coefficient used for area (Q=KCIA) is C = 0.892
Subarea runoff =      5.227(CFS)
Total initial stream area =        1.230(Ac.)
End of computations, total study area =            2.54 (Ac.)
The following figures may
be used for a unit hydrograph study of the same area.
Note: These figures do not consider reduced effective area
effects caused by confluences in the rational equation.

Area averaged pervious area fraction(Ap) = 0.100
Area averaged SCS curve number (AMC 2) =  32.0
```

Proposed 10-, 25-, & 100-Year Hydrology Calculations

Orange County Rational Hydrology Program

(Hydrology Manual Date(s) October 1986 & November 1996)

CIVILCADD/CIVILDESIGN Engineering Software, (c) 1989-2018 Version 9.0
Rational Hydrology Study, Date: 06/02/25 File Name: STRM5P10.roc

---

TTM 19391
STRM-005
PRELIMINARY
PROPOSED Q10

Program License Serial Number 6677

********* Hydrology Study Control Information **********

Rational hydrology study storm event year is 10.0

Decimal fraction of study above 2000 ft., 600M = 0.0000
English Units Used for input data

++

Process from Point/Station 100.000 to Point/Station 101.000
**** INITIAL AREA EVALUATION ****

CONDOMINIUM subarea type
Decimal fraction soil group A = 1.000
Decimal fraction soil group B = 0.000
Decimal fraction soil group C = 0.000
Decimal fraction soil group D = 0.000
SCS curve number for soil(AMC 2) = 32.00
Pervious ratio(Ap) = 0.3500 Max loss rate(Fp)= 0.400(In/Hr)
Max Catchment Loss (Fm) = 0.140(In/Hr)
Initial subarea data:
Initial area flow distance = 112.410(Ft.)
Top (of initial area) elevation = 71.990(Ft.)
Bottom (of initial area) elevation = 70.350(Ft.)
Difference in elevation = 1.640(Ft.)
Slope = 0.01459 s(%)= 1.46
TC = k(0.360)*[(length^3)/(elevation change)]^0.2
Initial area time of concentration = 5.544 min.
Rainfall intensity = 3.826(In/Hr) for a 10.0 year storm

```
Effective runoff coefficient used for area (Q=KCIA) is C = 0.867
Subarea runoff =      0.829(CFS)
Total initial stream area =        0.250(Ac.)
```



```
++++++++++++++++++++++++++++++++++++++++++++++++++++++++++++++++++++++++
Process from Point/Station      101.000 to Point/Station      102.000
**** STREET FLOW TRAVEL TIME + SUBAREA FLOW ADDITION ****
________________________________________________________________________
Top of street segment elevation =    70.350(Ft.)
End of street segment elevation =    68.000(Ft.)
Length of street segment  =   292.600(Ft.)
Height of curb above gutter flowline  =    6.0(In.)
Width of half street (curb to crown)  =  26.000(Ft.)
Distance from crown to crossfall grade break  =  24.000(Ft.)
Slope from gutter to grade break (v/hz) =   0.083
Slope from grade break to crown (v/hz)  =   0.020
Street flow is on [1] side(s) of the street
Distance from curb to property line  =   5.500(Ft.)
Slope from curb to property line (v/hz) =   0.020
Gutter width =   2.000(Ft.)
Gutter hike from flowline =  0.125(In.)
 Manning's N in gutter =  0.0130
 Manning's N from gutter to grade break =  0.0150
 Manning's N from grade break to crown =  0.0150
Estimated mean flow rate at midpoint of street =      3.912(CFS)
Depth of flow =   0.234(Ft.), Average velocity =   2.294(Ft/s)
Streetflow hydraulics at midpoint of street travel:
Halfstreet flow width =  13.173(Ft.)
Flow velocity =   2.29(Ft/s)
Travel time =    2.13 min.     TC =    7.67  min.
 Adding area flow to street
CONDOMINIUM subarea type
Decimal fraction soil group A = 1.000
Decimal fraction soil group B = 0.000
Decimal fraction soil group C = 0.000
Decimal fraction soil group D = 0.000
SCS curve number for soil(AMC 2)  = 32.00
Pervious ratio(Ap) = 0.3500  Max loss rate(Fp)=     0.400(In/Hr)
Max Catchment Loss (Fm) =     0.140(In/Hr)
Rainfall intensity =      3.177(In/Hr) for a    10.0 year storm
Effective runoff coefficient used for area,(total area with modified
rational method)(Q=KCIA) is C = 0.860
Subarea runoff =      6.113(CFS) for    2.290(Ac.)
Total runoff =      6.942(CFS)  Total area =        2.54(Ac.)
Area averaged Fm value =    0.140(In/Hr)
Street flow at end of street =      6.942(CFS)
Half street flow at end of street =      6.942(CFS)
Depth of flow =   0.296(Ft.), Average velocity =   2.643(Ft/s)
```

Flow width (from curb towards crown)= 16.297(Ft.)
End of computations, total study area = 2.54 (Ac.)
The following figures may
be used for a unit hydrograph study of the same area.
Note: These figures do not consider reduced effective area
effects caused by confluences in the rational equation.

Area averaged pervious area fraction(Ap) = 0.350
Area averaged SCS curve number (AMC 2) = 32.0

Orange County Rational Hydrology Program

(Hydrology Manual Date(s) October 1986 & November 1996)

CIVILCADD/CIVILDESIGN Engineering Software, (c) 1989-2018 Version 9.0
Rational Hydrology Study, Date: 06/02/25 File Name: strm5p25.roc

---

TTM 19391
STRM-005
PRELIMINARY
PROPOSED Q25

Program License Serial Number 6677

********* Hydrology Study Control Information **********

Rational hydrology study storm event year is 25.0

Decimal fraction of study above 2000 ft., 600M = 0.0000
English Units Used for input data

++

Process from Point/Station 100.000 to Point/Station 101.000
**** INITIAL AREA EVALUATION ****

CONDOMINIUM subarea type
Decimal fraction soil group A = 1.000
Decimal fraction soil group B = 0.000
Decimal fraction soil group C = 0.000
Decimal fraction soil group D = 0.000
SCS curve number for soil(AMC 2) = 32.00
Pervious ratio(Ap) = 0.3500 Max loss rate(Fp)= 0.400(In/Hr)
Max Catchment Loss (Fm) = 0.140(In/Hr)
Initial subarea data:
Initial area flow distance = 112.410(Ft.)
Top (of initial area) elevation = 71.990(Ft.)
Bottom (of initial area) elevation = 70.350(Ft.)
Difference in elevation = 1.640(Ft.)
Slope = 0.01459 s(%)= 1.46
TC = k(0.360)*[(length^3)/(elevation change)]^0.2
Initial area time of concentration = 5.544 min.
Rainfall intensity = 4.550(In/Hr) for a 25.0 year storm

```
Effective runoff coefficient used for area (Q=KCIA) is C = 0.872
Subarea runoff =      0.992(CFS)
Total initial stream area =        0.250(Ac.)
```



```
++++++++++++++++++++++++++++++++++++++++++++++++++++++++++++++++++++++++
Process from Point/Station      101.000 to Point/Station      102.000
**** STREET FLOW TRAVEL TIME + SUBAREA FLOW ADDITION ****
________________________________________________________________________
Top of street segment elevation =    70.350(Ft.)
End of street segment elevation =    68.000(Ft.)
Length of street segment  =   292.600(Ft.)
Height of curb above gutter flowline  =    6.0(In.)
Width of half street (curb to crown)  =  26.000(Ft.)
Distance from crown to crossfall grade break  =  24.000(Ft.)
Slope from gutter to grade break (v/hz) =   0.083
Slope from grade break to crown (v/hz)  =   0.020
Street flow is on [1] side(s) of the street
Distance from curb to property line  =   5.500(Ft.)
Slope from curb to property line (v/hz) =   0.020
Gutter width =   2.000(Ft.)
Gutter hike from flowline =  0.125(In.)
 Manning's N in gutter =  0.0130
 Manning's N from gutter to grade break =  0.0150
 Manning's N from grade break to crown =  0.0150
Estimated mean flow rate at midpoint of street =      4.725(CFS)
Depth of flow =   0.253(Ft.), Average velocity =   2.403(Ft/s)
Streetflow hydraulics at midpoint of street travel:
Halfstreet flow width =  14.127(Ft.)
Flow velocity =   2.40(Ft/s)
Travel time =    2.03 min.     TC =    7.57  min.
 Adding area flow to street
CONDOMINIUM subarea type
Decimal fraction soil group A = 1.000
Decimal fraction soil group B = 0.000
Decimal fraction soil group C = 0.000
Decimal fraction soil group D = 0.000
SCS curve number for soil(AMC 2)  = 32.00
Pervious ratio(Ap) = 0.3500  Max loss rate(Fp)=     0.400(In/Hr)
Max Catchment Loss (Fm) =     0.140(In/Hr)
Rainfall intensity =      3.814(In/Hr) for a    25.0 year storm
Effective runoff coefficient used for area,(total area with modified
rational method)(Q=KCIA) is C = 0.867
Subarea runoff =      7.406(CFS) for    2.290(Ac.)
Total runoff =      8.398(CFS)  Total area =        2.54(Ac.)
Area averaged Fm value =    0.140(In/Hr)
Street flow at end of street =      8.398(CFS)
Half street flow at end of street =      8.398(CFS)
Depth of flow =   0.320(Ft.), Average velocity =   2.771(Ft/s)
```

Flow width (from curb towards crown)= 17.494(Ft.)
End of computations, total study area = 2.54 (Ac.)
The following figures may
be used for a unit hydrograph study of the same area.
Note: These figures do not consider reduced effective area
effects caused by confluences in the rational equation.

Area averaged pervious area fraction(Ap) = 0.350
Area averaged SCS curve number (AMC 2) = 32.0

Orange County Rational Hydrology Program

(Hydrology Manual Date(s) October 1986 & November 1996)

CIVILCADD/CIVILDESIGN Engineering Software, (c) 1989-2018 Version 9.0
Rational Hydrology Study, Date: 06/02/25 File Name: STRM5P100.roc

---

TTM 19391
STRM-005
PRELIMINARY
PROPOSED Q100

Program License Serial Number 6677

********* Hydrology Study Control Information **********

Rational hydrology study storm event year is 100.0

Decimal fraction of study above 2000 ft., 600M = 0.0000
English Units Used for input data

++

Process from Point/Station 100.000 to Point/Station 101.000
**** INITIAL AREA EVALUATION ****

CONDOMINIUM subarea type
Decimal fraction soil group A = 1.000
Decimal fraction soil group B = 0.000
Decimal fraction soil group C = 0.000
Decimal fraction soil group D = 0.000
SCS curve number for soil(AMC 2) = 32.00
Pervious ratio(Ap) = 0.3500 Max loss rate(Fp)= 0.400(In/Hr)
Max Catchment Loss (Fm) = 0.140(In/Hr)
Initial subarea data:
Initial area flow distance = 112.410(Ft.)
Top (of initial area) elevation = 71.990(Ft.)
Bottom (of initial area) elevation = 70.350(Ft.)
Difference in elevation = 1.640(Ft.)
Slope = 0.01459 s(%)= 1.46
TC = k(0.360)*[(length^3)/(elevation change)]^0.2
Initial area time of concentration = 5.544 min.
Rainfall intensity = 5.832(In/Hr) for a 100.0 year storm

```
Effective runoff coefficient used for area (Q=KCIA) is C = 0.878
Subarea runoff =      1.281(CFS)
Total initial stream area =        0.250(Ac.)
```



```
++++++++++++++++++++++++++++++++++++++++++++++++++++++++++++++++++++++++
Process from Point/Station      101.000 to Point/Station      102.000
**** STREET FLOW TRAVEL TIME + SUBAREA FLOW ADDITION ****
________________________________________________________________________
Top of street segment elevation =    70.350(Ft.)
End of street segment elevation =    68.000(Ft.)
Length of street segment  =   292.600(Ft.)
Height of curb above gutter flowline  =    6.0(In.)
Width of half street (curb to crown)  =  26.000(Ft.)
Distance from crown to crossfall grade break  =  24.000(Ft.)
Slope from gutter to grade break (v/hz) =   0.083
Slope from grade break to crown (v/hz)  =   0.020
Street flow is on [1] side(s) of the street
Distance from curb to property line  =   5.500(Ft.)
Slope from curb to property line (v/hz) =   0.020
Gutter width =   2.000(Ft.)
Gutter hike from flowline =  0.125(In.)
 Manning's N in gutter =  0.0130
 Manning's N from gutter to grade break =  0.0150
 Manning's N from grade break to crown =  0.0150
Estimated mean flow rate at midpoint of street =      6.147(CFS)
Depth of flow =   0.282(Ft.), Average velocity =   2.565(Ft/s)
Streetflow hydraulics at midpoint of street travel:
Halfstreet flow width =  15.576(Ft.)
Flow velocity =   2.56(Ft/s)
Travel time =    1.90 min.     TC =    7.45  min.
 Adding area flow to street
CONDOMINIUM subarea type
Decimal fraction soil group A = 1.000
Decimal fraction soil group B = 0.000
Decimal fraction soil group C = 0.000
Decimal fraction soil group D = 0.000
SCS curve number for soil(AMC 2)  = 32.00
Pervious ratio(Ap) = 0.3500  Max loss rate(Fp)=     0.400(In/Hr)
Max Catchment Loss (Fm) =     0.140(In/Hr)
Rainfall intensity =      4.925(In/Hr) for a   100.0 year storm
Effective runoff coefficient used for area,(total area with modified
rational method)(Q=KCIA) is C = 0.874
Subarea runoff =      9.658(CFS) for    2.290(Ac.)
Total runoff =     10.939(CFS)  Total area =        2.54(Ac.)
Area averaged Fm value =    0.140(In/Hr)
Street flow at end of street =     10.939(CFS)
Half street flow at end of street =     10.939(CFS)
Depth of flow =   0.357(Ft.), Average velocity =   2.958(Ft/s)
```

Flow width (from curb towards crown)= 19.306(Ft.)
End of computations, total study area = 2.54 (Ac.)
The following figures may
be used for a unit hydrograph study of the same area.
Note: These figures do not consider reduced effective area
effects caused by confluences in the rational equation.

Area averaged pervious area fraction(Ap) = 0.350
Area averaged SCS curve number (AMC 2) = 32.0

Appendix C

Hydraulic Calculations

Catch Basin Sizing

To be provided during Final Engineering

Parkway Drain Sizing

To be provided during Final Engineering

100-Year Water Surface Elevation

To be provided during Final Engineering

WSPG Calculations

To be provided during Final Engineering

Appendix D

Reference Material

NRCS Hydrologic Soil Groups (TGD)

United States Department of Agriculture

NRCS

Natural Resources Conservation Service

A product of the National Cooperative Soil Survey, a joint effort of the United States Department of Agriculture and other Federal agencies, State agencies including the Agricultural Experiment Stations, and local participants

Custom Soil Resource Report for Orange County and Part of Riverside County, California



December 2, 2024

Preface

Soil surveys contain information that affects land use planning in survey areas. They highlight soil limitations that affect various land uses and provide information about the properties of the soils in the survey areas. Soil surveys are designed for many different users, including farmers, ranchers, foresters, agronomists, urban planners, community officials, engineers, developers, builders, and home buyers. Also, conservationists, teachers, students, and specialists in recreation, waste disposal, and pollution control can use the surveys to help them understand, protect, or enhance the environment.

Various land use regulations of Federal, State, and local governments may impose special restrictions on land use or land treatment. Soil surveys identify soil properties that are used in making various land use or land treatment decisions. The information is intended to help the land users identify and reduce the effects of soil limitations on various land uses. The landowner or user is responsible for identifying and complying with existing laws and regulations.

Although soil survey information can be used for general farm, local, and wider area planning, onsite investigation is needed to supplement this information in some cases. Examples include soil quality assessments (http://www.nrcs.usda.gov/wps/portal/nrcs/main/soils/health/) and certain conservation and engineering applications. For more detailed information, contact your local USDA Service Center (https://offices.sc.egov.usda.gov/locator/app?agency=nrcs) or your NRCS State Soil Scientist (http://www.nrcs.usda.gov/wps/portal/nrcs/detail/soils/contactus/?cid=nrcs142p2_053951).

Great differences in soil properties can occur within short distances. Some soils are seasonally wet or subject to flooding. Some are too unstable to be used as a foundation for buildings or roads. Clayey or wet soils are poorly suited to use as septic tank absorption fields. A high water table makes a soil poorly suited to basements or underground installations.

The National Cooperative Soil Survey is a joint effort of the United States Department of Agriculture and other Federal agencies, State agencies including the Agricultural Experiment Stations, and local agencies. The Natural Resources Conservation Service (NRCS) has leadership for the Federal part of the National Cooperative Soil Survey.

Information about soils is updated periodically. Updated information is available through the NRCS Web Soil Survey, the site for official soil survey information.

The U.S. Department of Agriculture (USDA) prohibits discrimination in all its programs and activities on the basis of race, color, national origin, age, disability, and where applicable, sex, marital status, familial status, parental status, religion, sexual orientation, genetic information, political beliefs, reprisal, or because all or a part of an individual's income is derived from any public assistance program. (Not all prohibited bases apply to all programs.) Persons with disabilities who require

alternative means for communication of program information (Braille, large print, audiotape, etc.) should contact USDA's TARGET Center at (202) 720-2600 (voice and TDD). To file a complaint of discrimination, write to USDA, Director, Office of Civil Rights, 1400 Independence Avenue, S.W., Washington, D.C. 20250-9410 or call (800) 795-3272 (voice) or (202) 720-6382 (TDD). USDA is an equal opportunity provider and employer.

Contents

Preface.....2
How Soil Surveys Are Made.....5
Soil Map.....8
Soil Map.....9
Legend.....10
Map Unit Legend.....12
Map Unit Descriptions.....12
Orange County and Part of Riverside County, California.....14
158—Hueneme fine sandy loam, drained.....14
163—Metz loamy sand.....15
References.....17

How Soil Surveys Are Made

Soil surveys are made to provide information about the soils and miscellaneous areas in a specific area. They include a description of the soils and miscellaneous areas and their location on the landscape and tables that show soil properties and limitations affecting various uses. Soil scientists observed the steepness, length, and shape of the slopes; the general pattern of drainage; the kinds of crops and native plants; and the kinds of bedrock. They observed and described many soil profiles. A soil profile is the sequence of natural layers, or horizons, in a soil. The profile extends from the surface down into the unconsolidated material in which the soil formed or from the surface down to bedrock. The unconsolidated material is devoid of roots and other living organisms and has not been changed by other biological activity.

Currently, soils are mapped according to the boundaries of major land resource areas (MLRAs). MLRAs are geographically associated land resource units that share common characteristics related to physiography, geology, climate, water resources, soils, biological resources, and land uses (USDA, 2006). Soil survey areas typically consist of parts of one or more MLRA.

The soils and miscellaneous areas in a survey area occur in an orderly pattern that is related to the geology, landforms, relief, climate, and natural vegetation of the area. Each kind of soil and miscellaneous area is associated with a particular kind of landform or with a segment of the landform. By observing the soils and miscellaneous areas in the survey area and relating their position to specific segments of the landform, a soil scientist develops a concept, or model, of how they were formed. Thus, during mapping, this model enables the soil scientist to predict with a considerable degree of accuracy the kind of soil or miscellaneous area at a specific location on the landscape.

Commonly, individual soils on the landscape merge into one another as their characteristics gradually change. To construct an accurate soil map, however, soil scientists must determine the boundaries between the soils. They can observe only a limited number of soil profiles. Nevertheless, these observations, supplemented by an understanding of the soil-vegetation-landscape relationship, are sufficient to verify predictions of the kinds of soil in an area and to determine the boundaries.

Soil scientists recorded the characteristics of the soil profiles that they studied. They noted soil color, texture, size and shape of soil aggregates, kind and amount of rock fragments, distribution of plant roots, reaction, and other features that enable them to identify soils. After describing the soils in the survey area and determining their properties, the soil scientists assigned the soils to taxonomic classes (units). Taxonomic classes are concepts. Each taxonomic class has a set of soil characteristics with precisely defined limits. The classes are used as a basis for comparison to classify soils systematically. Soil taxonomy, the system of taxonomic classification used in the United States, is based mainly on the kind and character of soil properties and the arrangement of horizons within the profile. After the soil

scientists classified and named the soils in the survey area, they compared the individual soils with similar soils in the same taxonomic class in other areas so that they could confirm data and assemble additional data based on experience and research.

The objective of soil mapping is not to delineate pure map unit components; the objective is to separate the landscape into landforms or landform segments that have similar use and management requirements. Each map unit is defined by a unique combination of soil components and/or miscellaneous areas in predictable proportions. Some components may be highly contrasting to the other components of the map unit. The presence of minor components in a map unit in no way diminishes the usefulness or accuracy of the data. The delineation of such landforms and landform segments on the map provides sufficient information for the development of resource plans. If intensive use of small areas is planned, onsite investigation is needed to define and locate the soils and miscellaneous areas.

Soil scientists make many field observations in the process of producing a soil map. The frequency of observation is dependent upon several factors, including scale of mapping, intensity of mapping, design of map units, complexity of the landscape, and experience of the soil scientist. Observations are made to test and refine the soil-landscape model and predictions and to verify the classification of the soils at specific locations. Once the soil-landscape model is refined, a significantly smaller number of measurements of individual soil properties are made and recorded. These measurements may include field measurements, such as those for color, depth to bedrock, and texture, and laboratory measurements, such as those for content of sand, silt, clay, salt, and other components. Properties of each soil typically vary from one point to another across the landscape.

Observations for map unit components are aggregated to develop ranges of characteristics for the components. The aggregated values are presented. Direct measurements do not exist for every property presented for every map unit component. Values for some properties are estimated from combinations of other properties.

While a soil survey is in progress, samples of some of the soils in the area generally are collected for laboratory analyses and for engineering tests. Soil scientists interpret the data from these analyses and tests as well as the field-observed characteristics and the soil properties to determine the expected behavior of the soils under different uses. Interpretations for all of the soils are field tested through observation of the soils in different uses and under different levels of management. Some interpretations are modified to fit local conditions, and some new interpretations are developed to meet local needs. Data are assembled from other sources, such as research information, production records, and field experience of specialists. For example, data on crop yields under defined levels of management are assembled from farm records and from field or plot experiments on the same kinds of soil.

Predictions about soil behavior are based not only on soil properties but also on such variables as climate and biological activity. Soil conditions are predictable over long periods of time, but they are not predictable from year to year. For example, soil scientists can predict with a fairly high degree of accuracy that a given soil will have a high water table within certain depths in most years, but they cannot predict that a high water table will always be at a specific level in the soil on a specific date.

After soil scientists located and identified the significant natural bodies of soil in the survey area, they drew the boundaries of these bodies on aerial photographs and

identified each as a specific map unit. Aerial photographs show trees, buildings, fields, roads, and rivers, all of which help in locating boundaries accurately.

Soil Map

The soil map section includes the soil map for the defined area of interest, a list of soil map units on the map and extent of each map unit, and cartographic symbols displayed on the map. Also presented are various metadata about data used to produce the map, and a description of each soil map unit.

Custom Soil Resource Report
Soil Map

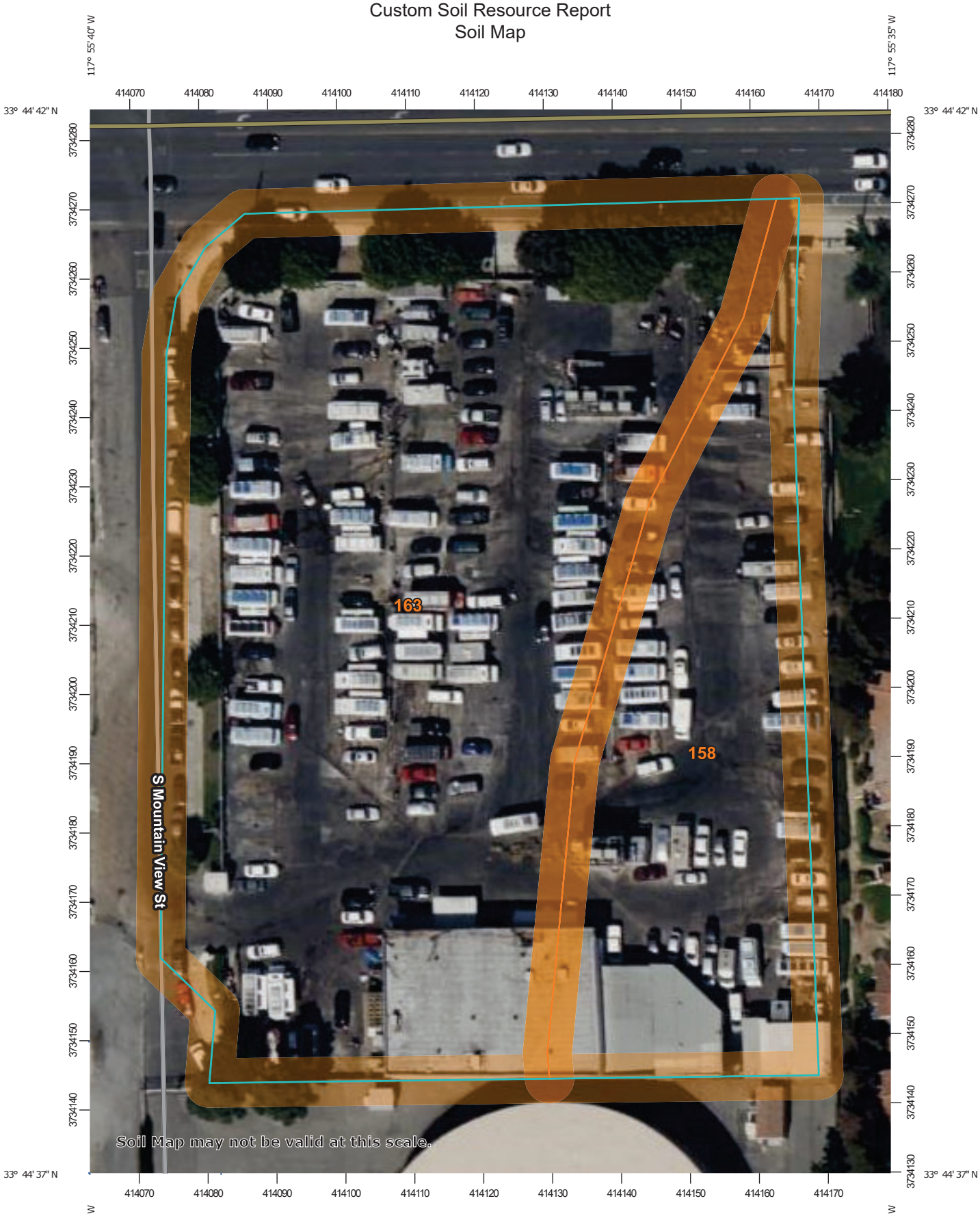

Map Scale: 1:750 if printed on A portrait (8.5" x 11") sheet.

N

Meters: 0 10 20 40 60

Feet: 0 35 70 140 210

Map projection: Web Mercator Corner coordinates: WGS84 Edge tics: UTM Zone 11N WGS84

MAP LEGEND

Area of Interest (AOI)
- Area of Interest (AOI)

Soils
- Soil Map Unit Polygons
- Soil Map Unit Lines
- Soil Map Unit Points

Special Point Features
- Blowout
- Borrow Pit
- Clay Spot
- Closed Depression
- Gravel Pit
- Gravelly Spot
- Landfill
- Lava Flow
- Marsh or swamp
- Mine or Quarry
- Miscellaneous Water
- Perennial Water
- Rock Outcrop
- Saline Spot
- Sandy Spot
- Severely Eroded Spot
- Sinkhole
- Slide or Slip
- Sodic Spot
- Spoil Area
- Stony Spot
- Very Stony Spot
- Wet Spot
- Other
- Special Line Features

Water Features
- Streams and Canals

Transportation
- Rails
- Interstate Highways
- US Routes
- Major Roads
- Local Roads

Background
- Aerial Photography

MAP INFORMATION

The soil surveys that comprise your AOI were mapped at 1:24,000.

Warning: Soil Map may not be valid at this scale.

Enlargement of maps beyond the scale of mapping can cause misunderstanding of the detail of mapping and accuracy of soil line placement. The maps do not show the small areas of contrasting soils that could have been shown at a more detailed scale.

Please rely on the bar scale on each map sheet for map measurements.

Source of Map: Natural Resources Conservation Service
Web Soil Survey URL:
Coordinate System: Web Mercator (EPSG:3857)

Maps from the Web Soil Survey are based on the Web Mercator projection, which preserves direction and shape but distorts distance and area. A projection that preserves area, such as the Albers equal-area conic projection, should be used if more accurate calculations of distance or area are required.

This product is generated from the USDA-NRCS certified data as of the version date(s) listed below.

Soil Survey Area: Orange County and Part of Riverside County, California
Survey Area Data: Version 18, Aug 30, 2024

Soil map units are labeled (as space allows) for map scales 1:50,000 or larger.

Date(s) aerial images were photographed: Mar 14, 2022—Mar 17, 2022

The orthophoto or other base map on which the soil lines were compiled and digitized probably differs from the background

MAP LEGEND

MAP INFORMATION

imagery displayed on these maps. As a result, some minor shifting of map unit boundaries may be evident.

Map Unit Legend

Map Unit Symbol	Map Unit Name	Acres in AOI	Percent of AOI
158	Hueneme fine sandy loam, drained	0.8	27.6%
163	Metz loamy sand	2.1	72.4%
Totals for Area of Interest		**2.9**	**100.0%**

Map Unit Descriptions

The map units delineated on the detailed soil maps in a soil survey represent the soils or miscellaneous areas in the survey area. The map unit descriptions, along with the maps, can be used to determine the composition and properties of a unit.

A map unit delineation on a soil map represents an area dominated by one or more major kinds of soil or miscellaneous areas. A map unit is identified and named according to the taxonomic classification of the dominant soils. Within a taxonomic class there are precisely defined limits for the properties of the soils. On the landscape, however, the soils are natural phenomena, and they have the characteristic variability of all natural phenomena. Thus, the range of some observed properties may extend beyond the limits defined for a taxonomic class. Areas of soils of a single taxonomic class rarely, if ever, can be mapped without including areas of other taxonomic classes. Consequently, every map unit is made up of the soils or miscellaneous areas for which it is named and some minor components that belong to taxonomic classes other than those of the major soils.

Most minor soils have properties similar to those of the dominant soil or soils in the map unit, and thus they do not affect use and management. These are called noncontrasting, or similar, components. They may or may not be mentioned in a particular map unit description. Other minor components, however, have properties and behavioral characteristics divergent enough to affect use or to require different management. These are called contrasting, or dissimilar, components. They generally are in small areas and could not be mapped separately because of the scale used. Some small areas of strongly contrasting soils or miscellaneous areas are identified by a special symbol on the maps. If included in the database for a given area, the contrasting minor components are identified in the map unit descriptions along with some characteristics of each. A few areas of minor components may not have been observed, and consequently they are not mentioned in the descriptions, especially where the pattern was so complex that it was impractical to make enough observations to identify all the soils and miscellaneous areas on the landscape.

The presence of minor components in a map unit in no way diminishes the usefulness or accuracy of the data. The objective of mapping is not to delineate pure taxonomic classes but rather to separate the landscape into landforms or landform segments that have similar use and management requirements. The delineation of such segments on the map provides sufficient information for the development of resource plans. If intensive use of small areas is planned, however,

onsite investigation is needed to define and locate the soils and miscellaneous areas.

An identifying symbol precedes the map unit name in the map unit descriptions. Each description includes general facts about the unit and gives important soil properties and qualities.

Soils that have profiles that are almost alike make up a *soil series*. Except for differences in texture of the surface layer, all the soils of a series have major horizons that are similar in composition, thickness, and arrangement.

Soils of one series can differ in texture of the surface layer, slope, stoniness, salinity, degree of erosion, and other characteristics that affect their use. On the basis of such differences, a soil series is divided into *soil phases*. Most of the areas shown on the detailed soil maps are phases of soil series. The name of a soil phase commonly indicates a feature that affects use or management. For example, Alpha silt loam, 0 to 2 percent slopes, is a phase of the Alpha series.

Some map units are made up of two or more major soils or miscellaneous areas. These map units are complexes, associations, or undifferentiated groups.

A *complex* consists of two or more soils or miscellaneous areas in such an intricate pattern or in such small areas that they cannot be shown separately on the maps. The pattern and proportion of the soils or miscellaneous areas are somewhat similar in all areas. Alpha-Beta complex, 0 to 6 percent slopes, is an example.

An *association* is made up of two or more geographically associated soils or miscellaneous areas that are shown as one unit on the maps. Because of present or anticipated uses of the map units in the survey area, it was not considered practical or necessary to map the soils or miscellaneous areas separately. The pattern and relative proportion of the soils or miscellaneous areas are somewhat similar. Alpha-Beta association, 0 to 2 percent slopes, is an example.

An *undifferentiated group* is made up of two or more soils or miscellaneous areas that could be mapped individually but are mapped as one unit because similar interpretations can be made for use and management. The pattern and proportion of the soils or miscellaneous areas in a mapped area are not uniform. An area can be made up of only one of the major soils or miscellaneous areas, or it can be made up of all of them. Alpha and Beta soils, 0 to 2 percent slopes, is an example.

Some surveys include *miscellaneous areas*. Such areas have little or no soil material and support little or no vegetation. Rock outcrop is an example.

Orange County and Part of Riverside County, California

158—Hueneme fine sandy loam, drained

Map Unit Setting

National map unit symbol: hcn3
Elevation: 0 to 430 feet
Mean annual precipitation: 15 inches
Mean annual air temperature: 64 degrees F
Frost-free period: 300 to 350 days
Farmland classification: Prime farmland if irrigated

Map Unit Composition

Hueneme and similar soils: 85 percent
Minor components: 15 percent
Estimates are based on observations, descriptions, and transects of the mapunit.

Description of Hueneme

Setting

Landform: Alluvial fans
Landform position (two-dimensional): Toeslope
Landform position (three-dimensional): Rise
Down-slope shape: Linear
Across-slope shape: Convex
Parent material: Stratified alluvium derived from sedimentary rock

Typical profile

H1 - 0 to 27 inches: fine sandy loam
H2 - 27 to 60 inches: stratified sand to silt loam

Properties and qualities

Slope: 0 to 2 percent
Depth to restrictive feature: More than 80 inches
Drainage class: Poorly drained
Capacity of the most limiting layer to transmit water (Ksat): High (1.98 to 5.95 in/hr)
Depth to water table: More than 80 inches
Frequency of flooding: None
Frequency of ponding: None
Calcium carbonate, maximum content: 1 percent
Maximum salinity: Very slightly saline to slightly saline (2.0 to 4.0 mmhos/cm)
Available water supply, 0 to 60 inches: Moderate (about 9.0 inches)

Interpretive groups

Land capability classification (irrigated): 1
Land capability classification (nonirrigated): 3c
Hydrologic Soil Group: A
Ecological site: R019XG911CA - Loamy Fan
Hydric soil rating: Yes

Minor Components

Bolsa, silt loam, drained

Percent of map unit: 5 percent
Hydric soil rating: No

San emigdio, fine sandy loam
Percent of map unit: 5 percent
Hydric soil rating: No

Hueneme, fine sandy loam
Percent of map unit: 5 percent
Hydric soil rating: No

163—Metz loamy sand

Map Unit Setting
National map unit symbol: hcn8
Elevation: 30 to 2,500 feet
Mean annual precipitation: 20 inches
Mean annual air temperature: 57 to 61 degrees F
Frost-free period: 200 to 340 days
Farmland classification: Prime farmland if irrigated

Map Unit Composition
Metz and similar soils: 80 percent
Minor components: 20 percent
Estimates are based on observations, descriptions, and transects of the mapunit.

Description of Metz

Setting
Landform: Alluvial fans
Landform position (two-dimensional): Toeslope
Landform position (three-dimensional): Side slope
Down-slope shape: Concave
Across-slope shape: Convex
Parent material: Alluvium derived from mixed

Typical profile
H1 - 0 to 17 inches: loamy sand
H2 - 17 to 63 inches: stratified sand to fine sandy loam

Properties and qualities
Slope: 0 to 2 percent
Depth to restrictive feature: More than 80 inches
Drainage class: Somewhat excessively drained
Runoff class: Low
Capacity of the most limiting layer to transmit water (Ksat): Moderately high to high (0.57 to 1.98 in/hr)
Depth to water table: More than 80 inches
Frequency of flooding: None
Frequency of ponding: None
Calcium carbonate, maximum content: 5 percent
Maximum salinity: Nonsaline to very slightly saline (0.0 to 2.0 mmhos/cm)
Available water supply, 0 to 60 inches: Low (about 5.4 inches)

Interpretive groups

Land capability classification (irrigated): 2s
Land capability classification (nonirrigated): 4e
Hydrologic Soil Group: B
Ecological site: R019XD035CA - SANDY
Hydric soil rating: No

Minor Components

San emigdio, fine sandy loam

Percent of map unit: 4 percent
Hydric soil rating: No

Hueneme, fine sandy loam

Percent of map unit: 4 percent
Hydric soil rating: No

Corralitos, loamy sand

Percent of map unit: 4 percent
Hydric soil rating: No

Metz, mod fine substratum

Percent of map unit: 4 percent
Hydric soil rating: No

Riverwash

Percent of map unit: 4 percent
Landform: Fans
Hydric soil rating: Yes

References

American Association of State Highway and Transportation Officials (AASHTO). 2004. Standard specifications for transportation materials and methods of sampling and testing. 24th edition.

American Society for Testing and Materials (ASTM). 2005. Standard classification of soils for engineering purposes. ASTM Standard D2487-00.

Cowardin, L.M., V. Carter, F.C. Golet, and E.T. LaRoe. 1979. Classification of wetlands and deep-water habitats of the United States. U.S. Fish and Wildlife Service FWS/OBS-79/31.

Federal Register. July 13, 1994. Changes in hydric soils of the United States.

Federal Register. September 18, 2002. Hydric soils of the United States.

Hurt, G.W., and L.M. Vasilas, editors. Version 6.0, 2006. Field indicators of hydric soils in the United States.

National Research Council. 1995. Wetlands: Characteristics and boundaries.

Soil Survey Division Staff. 1993. Soil survey manual. Soil Conservation Service. U.S. Department of Agriculture Handbook 18. http://www.nrcs.usda.gov/wps/portal/nrcs/detail/national/soils/?cid=nrcs142p2_054262

Soil Survey Staff. 1999. Soil taxonomy: A basic system of soil classification for making and interpreting soil surveys. 2nd edition. Natural Resources Conservation Service, U.S. Department of Agriculture Handbook 436. http://www.nrcs.usda.gov/wps/portal/nrcs/detail/national/soils/?cid=nrcs142p2_053577

Soil Survey Staff. 2010. Keys to soil taxonomy. 11th edition. U.S. Department of Agriculture, Natural Resources Conservation Service. http://www.nrcs.usda.gov/wps/portal/nrcs/detail/national/soils/?cid=nrcs142p2_053580

Tiner, R.W., Jr. 1985. Wetlands of Delaware. U.S. Fish and Wildlife Service and Delaware Department of Natural Resources and Environmental Control, Wetlands Section.

United States Army Corps of Engineers, Environmental Laboratory. 1987. Corps of Engineers wetlands delineation manual. Waterways Experiment Station Technical Report Y-87-1.

United States Department of Agriculture, Natural Resources Conservation Service. National forestry manual. http://www.nrcs.usda.gov/wps/portal/nrcs/detail/soils/home/?cid=nrcs142p2_053374

United States Department of Agriculture, Natural Resources Conservation Service. National range and pasture handbook. http://www.nrcs.usda.gov/wps/portal/nrcs/detail/national/landuse/rangepasture/?cid=stelprdb1043084

United States Department of Agriculture, Natural Resources Conservation Service. National soil survey handbook, title 430-VI. http://www.nrcs.usda.gov/wps/portal/nrcs/detail/soils/scientists/?cid=nrcs142p2_054242

United States Department of Agriculture, Natural Resources Conservation Service. 2006. Land resource regions and major land resource areas of the United States, the Caribbean, and the Pacific Basin. U.S. Department of Agriculture Handbook 296. http://www.nrcs.usda.gov/wps/portal/nrcs/detail/national/soils/?cid=nrcs142p2_053624

United States Department of Agriculture, Soil Conservation Service. 1961. Land capability classification. U.S. Department of Agriculture Handbook 210. http://www.nrcs.usda.gov/Internet/FSE_DOCUMENTS/nrcs142p2_052290.pdf

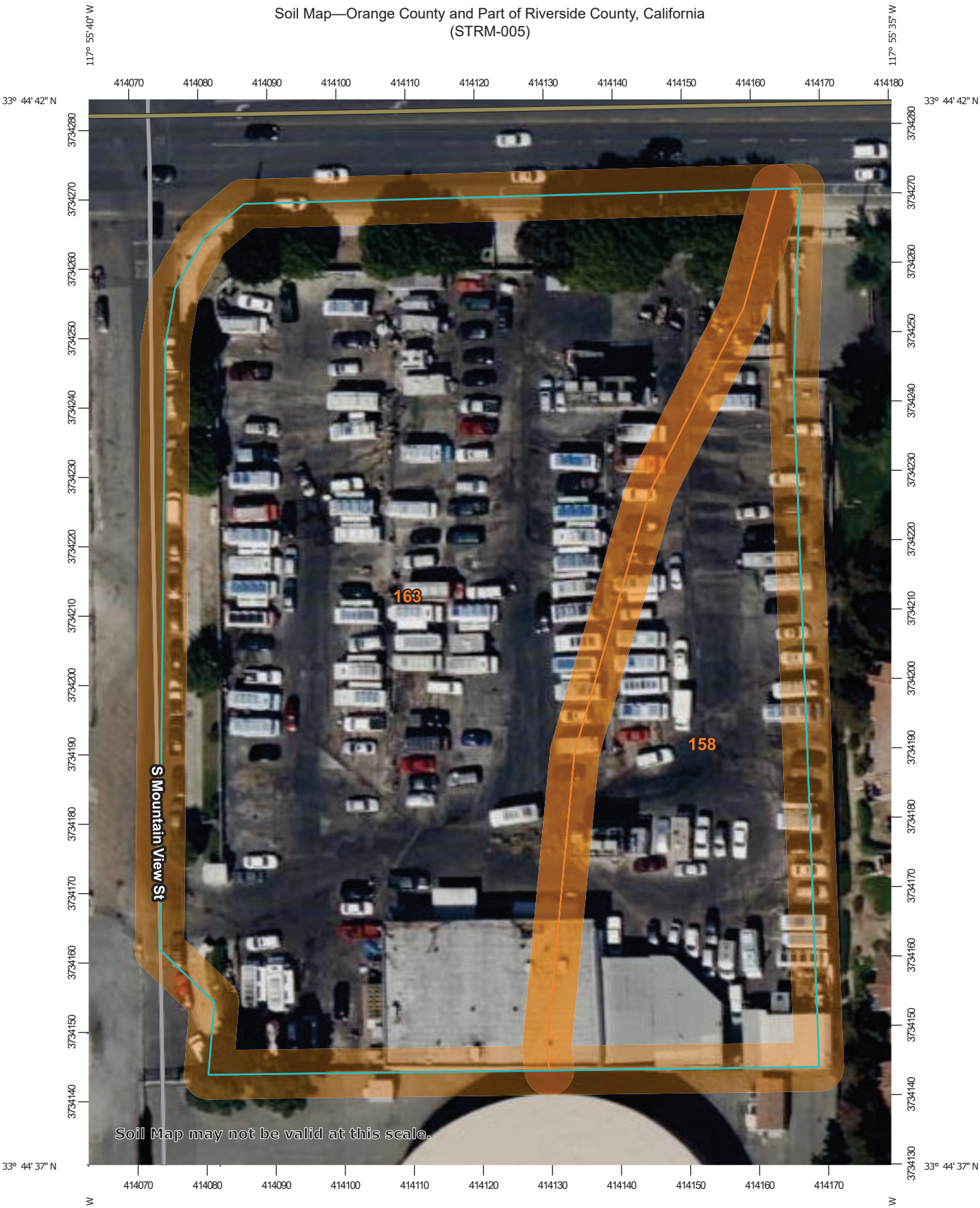

Map Scale: 1:750 if printed on A portrait (8.5" x 11") sheet.

N

Meters: 0 10 20 40 60

Feet: 0 35 70 140 210

Map projection: Web Mercator Corner coordinates: WGS84 Edge tics: UTM Zone 11N WGS84

MAP LEGEND

Area of Interest (AOI)
- Area of Interest (AOI)

Soils
- Soil Map Unit Polygons
- Soil Map Unit Lines
- Soil Map Unit Points

Special Point Features
- Blowout
- Borrow Pit
- Clay Spot
- Closed Depression
- Gravel Pit
- Gravelly Spot
- Landfill
- Lava Flow
- Marsh or swamp
- Mine or Quarry
- Miscellaneous Water
- Perennial Water
- Rock Outcrop
- Saline Spot
- Sandy Spot
- Severely Eroded Spot
- Sinkhole
- Slide or Slip
- Sodic Spot
- Spoil Area
- Stony Spot
- Very Stony Spot
- Wet Spot
- Other
- Special Line Features

Water Features
- Streams and Canals

Transportation
- Rails
- Interstate Highways
- US Routes
- Major Roads
- Local Roads

Background
- Aerial Photography

MAP INFORMATION

The soil surveys that comprise your AOI were mapped at 1:24,000.

Warning: Soil Map may not be valid at this scale.

Enlargement of maps beyond the scale of mapping can cause misunderstanding of the detail of mapping and accuracy of soil line placement. The maps do not show the small areas of contrasting soils that could have been shown at a more detailed scale.

Please rely on the bar scale on each map sheet for map measurements.

Source of Map: Natural Resources Conservation Service
Web Soil Survey URL:
Coordinate System: Web Mercator (EPSG:3857)

Maps from the Web Soil Survey are based on the Web Mercator projection, which preserves direction and shape but distorts distance and area. A projection that preserves area, such as the Albers equal-area conic projection, should be used if more accurate calculations of distance or area are required.

This product is generated from the USDA-NRCS certified data as of the version date(s) listed below.

Soil Survey Area: Orange County and Part of Riverside County, California
Survey Area Data: Version 18, Aug 30, 2024

Soil map units are labeled (as space allows) for map scales 1:50,000 or larger.

Date(s) aerial images were photographed: Mar 14, 2022—Mar 17, 2022

The orthophoto or other base map on which the soil lines were compiled and digitized probably differs from the background imagery displayed on these maps. As a result, some minor shifting of map unit boundaries may be evident.

Map Unit Legend

Map Unit Symbol	Map Unit Name	Acres in AOI	Percent of AOI
158	Hueneme fine sandy loam, drained	0.8	27.6%
163	Metz loamy sand	2.1	72.4%
Totals for Area of Interest		**2.9**	**100.0%**

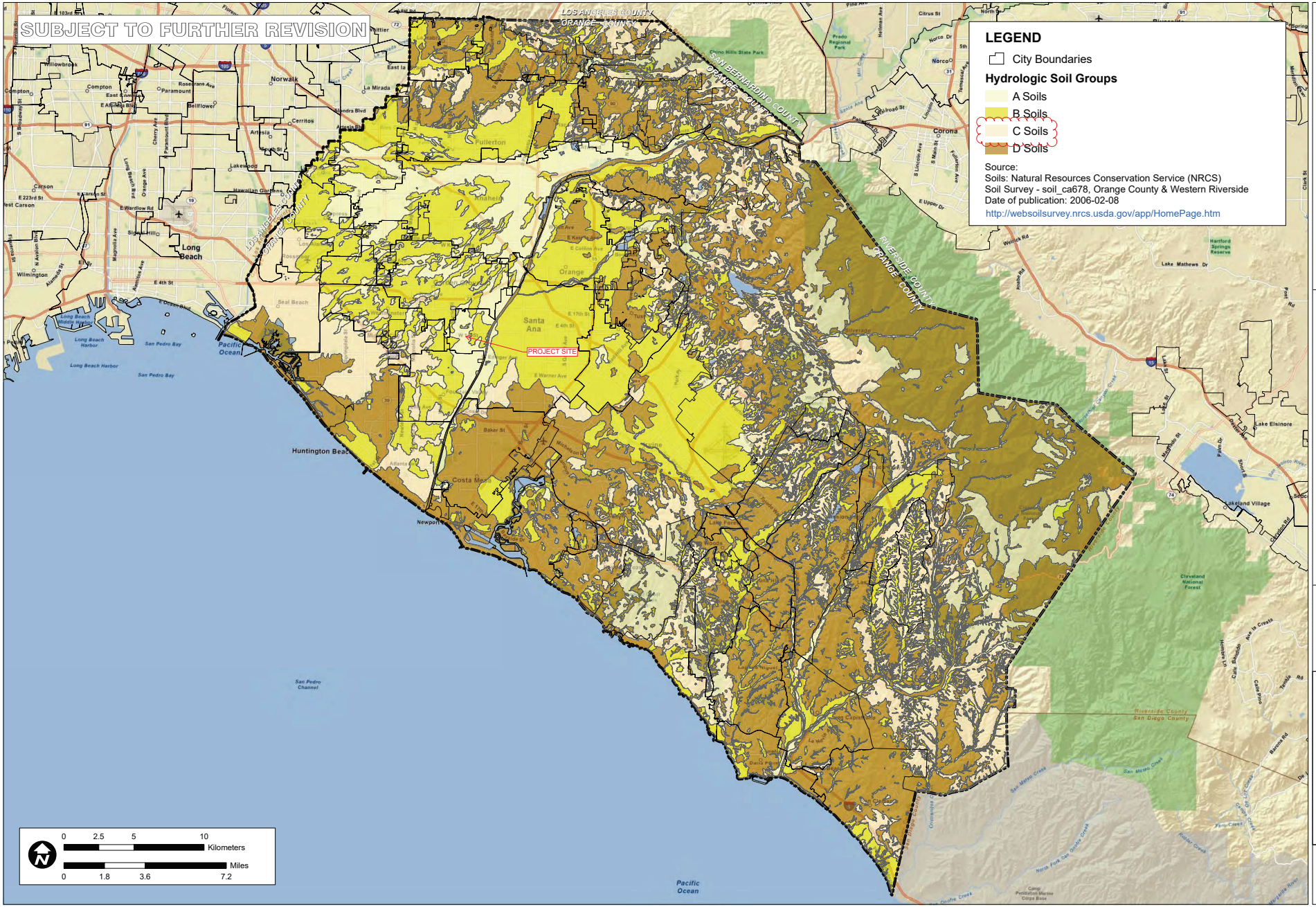

TITLE
NRCS HYDROLOGIC SOILS GROUPS

JOB
ORANGE COUNTY INFILTRATION STUDY
ORANGE CO. CA

SCALE	1" = 1.8 miles
DESIGNED	TH
DRAWING	TH
CHECKED	BMP
DATE	02/09/11
JOB NO.	9526-E

PACE
Advanced Water Engineering

FIGURE
XVI-2a

P:\9526\Ex-GIS\Mxds\Reports\InfiltrationFeasability_20110215\9526E_FigureXVI-2a_HydroSoils_20110215.mxd

OCFCD Facilities Maps

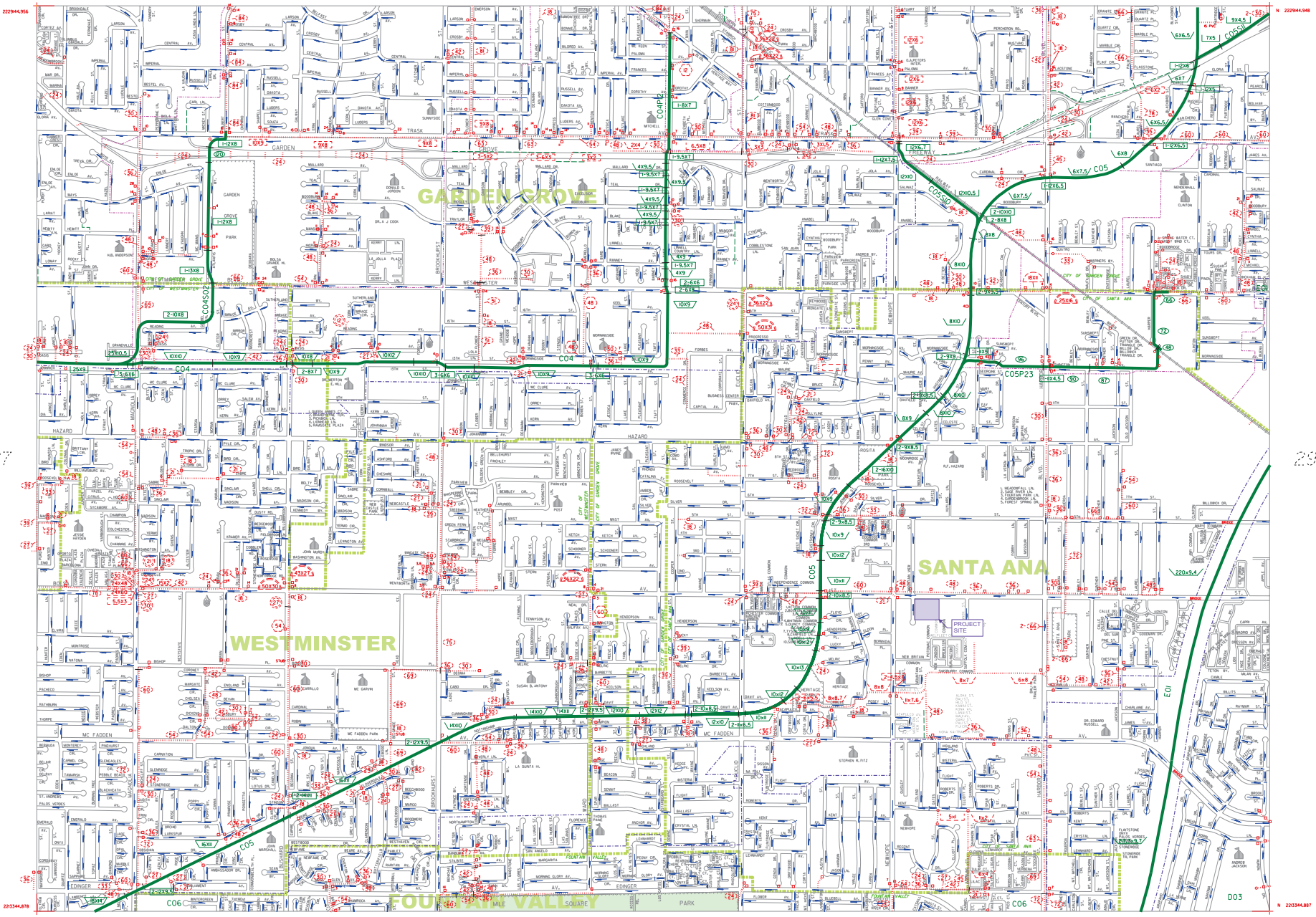
GARDEN GROVE
WESTMINSTER
SANTA ANA
FOUNTAIN VALLEY
PROJECT SITE
E 6036407.46
N 2229944.956
E 6057907.274
N 2229944.948
E 6036407.039
N 2203344.878
E 6057907.277
N 2203344.887
20
27
29
37
28
28
C04P2
C04S02
C04
C05S30
C05
C05P23
C06
D03
EOI
GARDEN GROVE BLVD
HAZARD
MC FADDEN
EDINGER
BROOKHURST
HARBOR
GOLDENWEST
BEACH
NEWHOPE
FLOWER
BRISTOL
MAIN
SUNFLOWER
SANTIAGO
CRAIG
BAKER
WARNER
17TH
15TH
SEVENTEEN TRACK
SANTA ANA RIVER
SANTA ANA FREEWAY
GARDEN GROVE FREEWAY
GARDEN GROVE PARK
MC FADDEN PARK
SQUARE
NOTICE
The drainage information has been prepared for information purposes only. The location, ownership, facility information and limits have been determined from available information provided by public agencies, but may not be exact, accurate, or up-to-date. The user of this information is responsible for verifying exact location, ownership, accuracy, and the regional versus local character of drainage facilities.
Additional information may be obtained from public plans and recorded deeds. Facility designations included with this information are for convenience only and are not controlling or intended to imply ownership by the County or the Orange County Flood Control District (OCFCD). The information is being provided as a courtesy and neither the County of Orange nor OCFCD assume any liabilities for inaccuracy of the information.
To notify the Resources & Development Management Department (RDMD) of additions or corrections, please contact Sal Gutierrez at (714) 834-5396 or by email at salgutierrez@rdmd.ocgov.com
N
0 200 400 600 800
FEET
ORANGE COUNTY FLOOD CONTROL DISTRICT
BASE MAP
OF DRAINAGE FACILITIES
IN ORANGE COUNTY
REVISION & GUTIERREZ
DATE JULY 22,2008
SHEET NO. 28
DWG.NO. MAPS-113-3
Channel Drainage Area Boundary
Major Sub-Area Drainage Boundary
Minor Sub-Area Drainage Boundary
Existing O.C.F.C.D. Facility
Existing Local Facility
Existing Retarding Basin or Reservoir
Natural Watercourse
City Limits
Greenbelt
P.S. P.S. Pump Station
Catch Basin (length in feet)
Drop Inlet or Other Entry
OCFCD Basins or Reservoirs
Ownership (if other than City or County): Private=P State=S Federal=F
EXISTING FACILITIES
O.C.F.C.D.
LOCAL
Earth Trapezoidal Channel (base width by height in feet)
Reinforced Concrete Trapezoidal Channel (base width by height in feet)
Reinforced Concrete Rectangular Channel (base width by height in feet)
Reinforced Concrete Box (RCB) (number of barrels-span by height in feet)
Reinforced Concrete Pipe (RCP) (diameter in inches)
Metal Sheet Channel (MSC) (Base width by pile height in feet,Sheet pile total length)
Corrugated Metal Pipe (CMP) (diameter in inches)
Concrete Pipe (diameter in inches)
Concrete Oval Pipe (width by height in inches)
Steel Pipe (diameter in inches)
Reinforced Concrete Arch (base span by height in inches)
Corrugated Metal Arch (base span by height in inches)

Appendix E

Vesting Tentative Tract Map

VESTING TENTATIVE TRACT MAP NO. 19391

FOR CONDOMINIUM PURPOSES

IN THE CITY OF SANTA ANA, COUNTY OF ORANGE, STATE OF CALIFORNIA

LEGAL DESCRIPTION:

THE LAND REFERRED TO HEREIN BELOW IS SITUATED IN THE CITY OF SANTA ANA, COUNTY OF ORANGE, STATE OF CALIFORNIA, AND IS DESCRIBED AS FOLLOWS:

PARCEL A1:

THE EAST 290.00 FEET OF THE WEST 310.00 FEET OF THE NORTH 252.00 FEET OF THE EAST HALF OF THE NORTH HALF OF THE WEST HALF OF THE NORTHWEST QUARTER OF THE NORTHEAST QUARTER OF SECTION 16, IN TOWNSHIP 5 SOUTH, RANGE 10 WEST, IN THE RANCHO LOS BOLSAS, IN THE CITY OF SANTA ANA, COUNTY OF ORANGE, STATE OF CALIFORNIA, AS PER MAP RECORDED IN BOOK 51, PAGE 12 OF MISCELLANEOUS MAPS, RECORDS OF SAID ORANGE COUNTY.

PARCEL A2:

THE NORTH 30.00 FEET OF THE EASTERLY 20.00 FEET OF THE EAST HALF OF THE NORTH HALF OF THE WEST HALF OF THE NORTHWEST QUARTER OF THE NORTHEAST QUARTER OF SECTION 16, TOWNSHIP 5 SOUTH, RANGE 10 WEST IN THE RANCHO, LAS BOLSAS, IN THE CITY OF SANTA ANA, COUNTY OF ORANGE, STATE OF CALIFORNIA, AS SHOWN ON A MAP RECORDED IN BOOK 51, PAGE 12 OF MISCELLANEOUS MAPS, RECORDS OF ORANGE COUNTY, CALIFORNIA.

PARCEL B:

THE EAST HALF OF THE NORTH HALF OF THE WEST HALF OF THE NORTHWEST QUARTER OF THE NORTHEAST QUARTER OF SECTION 16, TOWNSHIP 5 SOUTH, RANGE 10 WEST, IN THE RANCHO LAS BOLSAS, IN THE CITY OF SANTA ANA, COUNTY OF ORANGE, STATE OF CALIFORNIA, AS SHOWN ON A MAP RECORDED IN BOOK 51, PAGE 12 OF MISCELLANEOUS MAPS, RECORDS OF ORANGE COUNTY, CALIFORNIA.

EXCEPTING THEREFROM THE SOUTHERLY 204.00 FEET.

ALSO EXCEPTING THEREFROM THE EASTERLY 20.00 FEET.

ALSO EXCEPTING THEREFROM THE EAST 290.00 FEET OF THE WEST 310.00 FEET OF THE NORTH 252.00 FEET.

FOR CONVEYANCING PURPOSES ONLY: APN 188-021-10 AS TO PARCEL B
188-021-11 AS TO PORTION PARCEL A
188-021-12 AS TO PORTION PARCEL A

SITE ADDRESS:

4320 W. FIRST STREET & 201 S. MOUNTAIN VIEW STREET
SANTA ANA, CA 92705

BASIS OF BEARINGS:

THE BEARINGS FOR THIS SURVEY ARE BASED ON THE CALIFORNIA COORDINATE SYSTEM, ZONE VI, 1983 NAD 83, (2017.50 EPOCH OCS GPS ADJUSTMENT), AS DETERMINED LOCALLY BY A LINE BETWEEN CONTINUOUS GLOBAL POSITIONING STATIONS (CGPS) "FVPK" AND "LBC1" BEING N43°46'27"W AS DERIVED FROM GEODETIC VALUES PUBLISHED AND ON FILE IN THE OFFICE OF THE ORANGE COUNTY SURVEYOR.

DATUM STATEMENT:

COORDINATES SHOWN ARE BASED ON THE CALIFORNIA COORDINATE SYSTEM (CCS83), ZONE VI, NAD83, (2017.50 EPOCH OCS GPS ADJUSTMENT).

ALL DISTANCES SHOWN ARE GROUND, UNLESS OTHERWISE NOTED. TO OBTAIN GRID DISTANCES MULTIPLY GROUND DISTANCE BY 0.99998192.

	NORTHING	EASTING :
FVPK	2188769.57	6048756.26
LBC1	2251578.39	5988579.34

BENCHMARK STATEMENT:

OCS BENCHMARK NO. SA-314-83
ELEV: 67.783' (NAVD88)
DESCRIBED AS: DESCRIBED BY OCS 2002 – FOUND 3 3/4" OCS ALUMINUM BENCHMARK DISK STAMPED "SA-314-83", SET IN THE SOUTHWEST CORNER OF A 4 FT. BY 9FT. CONCRETE CATCH BASIN. MONUMENT IS LOCATED IN THE NORTHEAST CORNER OF THE INTERSECTION OF NEWHOPE STREET AND FIRST STREET, 75 FT. EASTERLY OF THE CENTERLINE OF NEWHOPE STREET AND 39 FT. NORTHERLY OF THE CENTERLINE OF FIRST STREET. MONUMENT IS SET LEVEL WITH THE SIDEWALK. (TABLE A-5)

FLOOD NOTE:

THE SUBJECT PROPERTY FALLS WITHIN "ZONE A – NO BASE FLOOD ELEVATIONS DETERMINED" PER FEMA MAP NO. 06059C0256J, A PRINTED PANEL, EFFECTIVE DECEMBER 3, 2009. (TABLE A-3)

LAND USE SUMMARY:

GROSS AREA: 3.266 A.C. (142,267 S.F.)
NET AREA: 2.539 A.C. (110,607 S.F.)
TOTAL PROPOSED LOTS: 1
TOTAL PROPOSED DWELLING UNITS: 60

UTILITY PURVEYORS & SERVICES:

WATER:	CITY OF SANTA ANA WATER DEPARTMENT	(714) 647-3341
SEWER:	CITY OF SANTA ANA PUBLIC WORKS	(714) 647-5690
ELECTRIC:	SOUTHERN CALIFORNIA EDISON	(800) 655-4555
GAS:	THE SOUTHERN CALIFORNIA GAS COMPANY	(800) 427-2200
TELEPHONE:	AT&T	(800) 255-5288
CABLE TV:	TIME WARNER CABLE	(800) 961-9941
SCHOOL DISTRICT:	SANTA ANA UNIFIED SCHOOL DISTRICT	(714) 558-5501
FIRE PROTECTION:	ORANGE COUNTY FIRE DEPARTMENT	(714) 573-6100
TRASH:	REPUBLIC SERVICES	(657) 467-6220

NOTE:

1) PURSUANT TO SUBDIVISION MAP ACT SECTION 66456.1(a), MULTIPLE FINAL MAPS MAY BE FILED ON THIS TENTATIVE MAP.

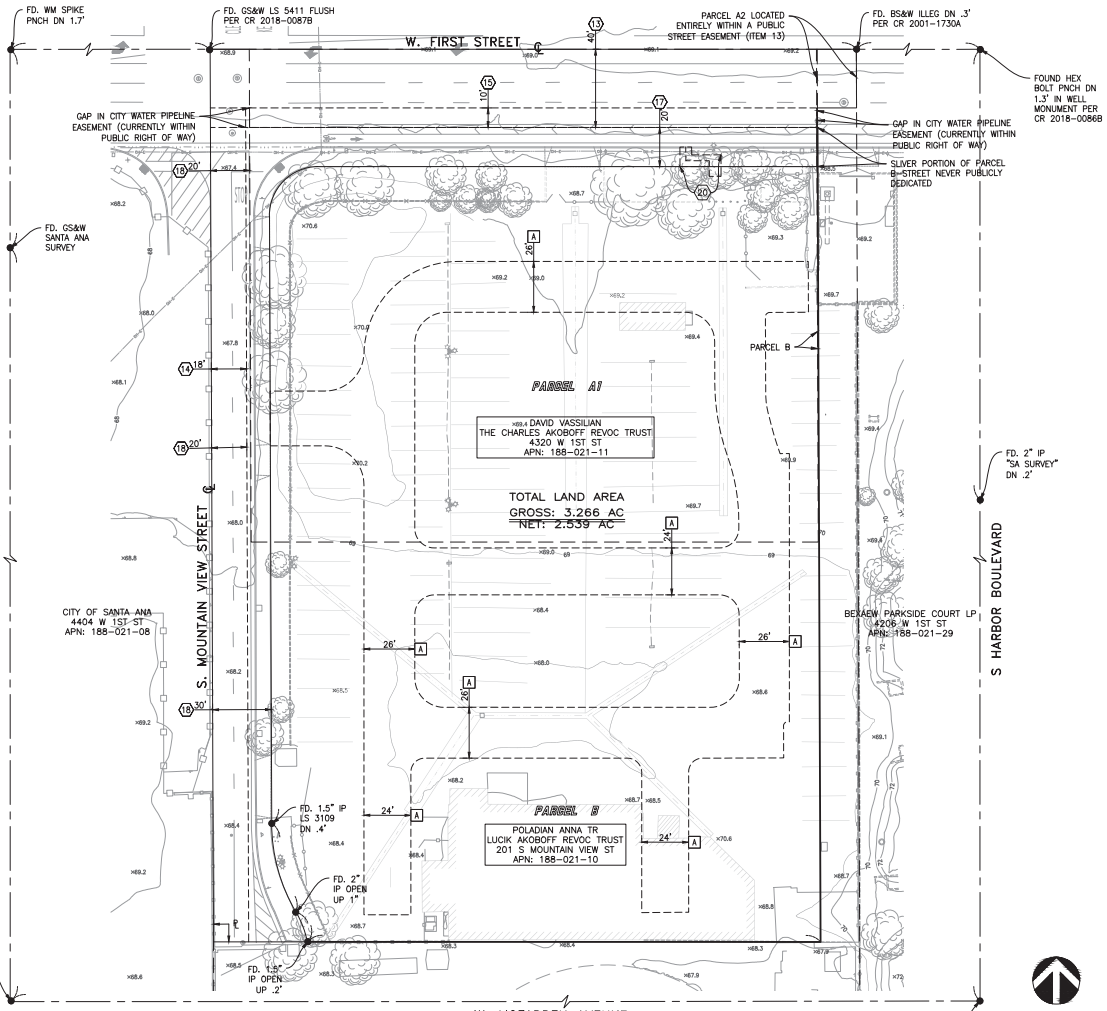

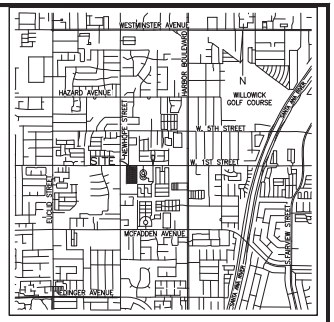

VICINITY MAP
N.T.S

CIVIL ENGINEER:

C&V CONSULTING, INC.
9830 IRVINE CENTER DRIVE
IRVINE, CA 92618
PHONE: (949) 916-3800

SUBDIVIDER:

STORM PROPERTIES, INC.
970 WEST 190TH STREET, #995
TORRANCE, CA 90502
(310) 986-2128
CONTACT: ALAN KWAN

SHEET INDEX:

SHEET NO.	
SHEET 1	VESTING TENTATIVE TRACT MAP
SHEET 2	PRELIMINARY SITE PLAN
SHEET 3	PRELIMINARY GRADING
SHEET 4	PRELIMINARY SECTIONS
SHEET 5	PRELIMINARY UTILITY PLAN
SHEET 6	TRASH CIRCULATION EXHIBIT

LEGEND:

- CENTERLINE
- SUBDIVISION BOUNDARY
- EASEMENT
- EX. LOT LINE
- EX. R/W
- PROP. R/W
- TIE

EXISTING EASEMENTS:

(#) DENOTES PLOTTED ITEM.

11 THE TERMS AND PROVISIONS CONTAINED IN THE DOCUMENT ENTITLED "DEED" RECORDED JULY 16, 1891 IN BOOK 56 OF DEEDS, PAGE 83.
(DOCUMENT ILLEGIBLE)

(13) AN EASEMENT FOR RIGHT OF WAY FOR BOLSA AVENUE AND INCIDENTAL PURPOSES, RECORDED MAY 18, 1953 AS BOOK 2504, PAGE 534 OF OFFICIAL RECORDS.
IN FAVOR OF: COUNTY OF ORANGE

(14) AN EASEMENT FOR CONSTRUCTION AND MAINTENANCE OF WATER MAINS AND INCIDENTAL PURPOSES, RECORDED MAY 28, 1962 AS BOOK 6124, PAGE 677 OF OFFICIAL RECORDS.
IN FAVOR OF: CITY OF SANTA ANA

(15) AN EASEMENT FOR WATER MAINS AND INCIDENTAL PURPOSES, RECORDED JUNE 24, 1963 AS BOOK 6801, PAGE 827 OF OFFICIAL RECORDS.
IN FAVOR OF: CITY OF SANTA ANA

(17) AN EASEMENT FOR STREET HIGHWAY AND ALLEY AND INCIDENTAL PURPOSES, RECORDED APRIL 5, 1965 AS BOOK 7470, PAGE 790 OF OFFICIAL RECORDS.
IN FAVOR OF: CITY OF SANTA ANA
SUCH ALLEY EASEMENT GRANTED THEREIN WAS SUBSEQUENTLY VACATED BY THE DOCUMENT
RECORDED OCTOBER 24, 1980, AS INSTRUMENT #38240

(18) AN EASEMENT FOR STREET, HIGHWAY AND ALLEY AND INCIDENTAL PURPOSES, RECORDED APRIL 8, 1965 AS BOOK 7476, PAGE 444 OF OFFICIAL RECORDS.
IN FAVOR OF: CITY OF SANTA ANA
SUCH ALLEY EASEMENT GRANTED THEREIN WAS SUBSEQUENTLY VACATED BY THE DOCUMENT
RECORDED OCTOBER 24, 1980, AS INSTRUMENT #38240

(20) AN EASEMENT FOR PUBLIC UTILITIES AND INCIDENTAL PURPOSES, RECORDED DECEMBER 6, 1983 AS INSTRUMENT NO. 83-555675 OF OFFICIAL RECORDS.
IN FAVOR OF: SOUTHERN CALIFORNIA EDISON COMPANY

PROPOSED EASEMENTS:

[A] INDICATES AN EASEMENT FOR INGRESS AND EGRESS FOR EMERGENCY AND PUBLIC SECURITY VEHICLE PURPOSES DEDICATED TO THE CITY OF SANTA ANA

[B] INDICATES AN EASEMENT FOR PUBLIC UTILITY AND PUBLIC STREET PURPOSES DEDICATED TO THE CITY OF SANTA ANA

VESTED OWNER:

DAVID VASSILIAN, AS SUCCESSOR TRUSTEE OF THE CHARLES AKOBOFF FAMILY TRUST THAT TRUST CREATED THE 9 DAY OF SEPT, 1997 AS TO PARCEL A1

ANNA POLADIAN, AS SUCCESSOR TRUSTEE OF THE LUCIK AKOBOFF REVOCABLE TRUST DATED APRIL 22, 2015 AS TO PARCELS A2 AND B

NOTE:

ANY WORK PROPOSED WITHIN AN EASEMENT AND/ OR OFFSITE AREAS SHALL REQUIRE A SIGNED LETTER AND/ OR AGREEMENT FROM ALL EASEMENT HOLDERS GRANTING PERMISSION OF PROPOSED WORK.

NOTE:

EASEMENTS OUTSIDE OF THE SUBDIVISION BOUNDARY ARE TO BE GRANTED PER SEPARATE INSTRUMENTS

SURVEYOR'S STATEMENT:

THE SURVEY ON WHICH THIS VESTING TENTATIVE MAP IS BASED WAS DONE BY ME, OR UNDER MY DIRECTION. FIELDWORK WAS COMPLETED ON FEBRUARY 29, 2024.

DANE P. MCDOUGALL, L.S. 9297

PROFESSIONAL LAND SURVEYOR DANE P. MCDOUGALL L.S. 9297 STATE OF CALIFORNIA

ENGINEER'S STATEMENT:

THIS VESTING TENTATIVE MAP WAS PREPARED BY ME, OR UNDER MY DIRECTION ON MAY 28, 2025.

DANE MCDOUGALL, R.C.E. 80705

REGISTERED PROFESSIONAL ENGINEER DANE P. MCDOUGALL C 80705 CIVIL STATE OF CALIFORNIA

C&V CONSULTING, INC. CIVIL ENGINEERING LAND PLANNING & SURVEYING
9830 IRVINE CENTER DRIVE IRVINE, CALIFORNIA 92618
(949) 916-3800 INFO@CANDVINC.NET WWW.CANDVINC.NET

PREPARED BY:

PREPARED FOR:

STORM PROPERTIES, INC.
970 W. 190TH ST., SUITE 995
TORRANCE, CA 90502

CITY OF SANTA ANA
DEPARTMENT OF PLANNING AND DEVELOPMENT

VESTING TENTATIVE TRACT MAP NO. 19391
VESTING TENTATIVE TRACT MAP
4320 W. FIRST STREET & 201 S. MOUNTAIN VIEW STREET
SANTA ANA, CA 92703

PROJECT NO. STRM-005

SHEET 1 OF 6

DATE: 5/30/2025

NOTE:

ANY WORK PROPOSED WITHIN AN EASEMENT AND/ OR OFFSITE AREAS SHALL REQUIRE A SIGNED LETTER AND/ OR AGREEMENT FROM ALL EASEMENT HOLDERS GRANTING PERMISSION OF PROPOSED WORK.

ABBREVIATIONS:

BNDY	BOUNDARY
CB	CATCH BASIN
C&G	CURB & GUTTER
CLF	CHAIN LINK FENCE
CO	CLEANOUT
CV	CONTROL VALVE
DCDA	DOUBLE CHECK DETECTOR ASSEMBLY
DU	DRY UTILITY
DW	DOMESTIC WATER
DWY	DRIVEWAY
ELEC	ELECTRIC
ESMT	EASEMENT
EX.	EXISTING
FH	FIRE HYDRANT
FW	FIRE WATER
FDC	FIRE DEPARTMENT CONNECTION
GV	GATE VALVE
JS	JUNCTION STRUCTURE
MH	MANHOLE
OH	OVERHEAD ELECTRICAL LINES
PKWY	PARKWAY
PL	PROPERTY LINE
PP	POWER POLE
PROP	PROPOSED
RPPA	REDUCED PRESSURE PRINCIPLE ASSEMBLY
R/W	RIGHT OF WAY
SF	SQUARE FOOT
SD	STORM DRAIN
SS	SANITARY SEWER
ST	STALL
STLT	STREETLIGHT
S/W	SIDEWALK
TB	TRUST BLOCK
TYP	TYPICAL
WM	WATER METER

LEGEND:

- CENTERLINE
- EX. R/W
- PROP. R/W
- EX. PL
- SETBACK
- EXISTING LOT LINE
- EASEMENT
- ADA PATH OF TRAVEL
- PROPOSED WALL
- PROPOSED PCC PAVEMENT
- PROPOSED DECORATIVE PAVEMENT
- PROPOSED 2-3" GRIND/ OVERLAY
- 15'X15' SIGHT TRIANGLE

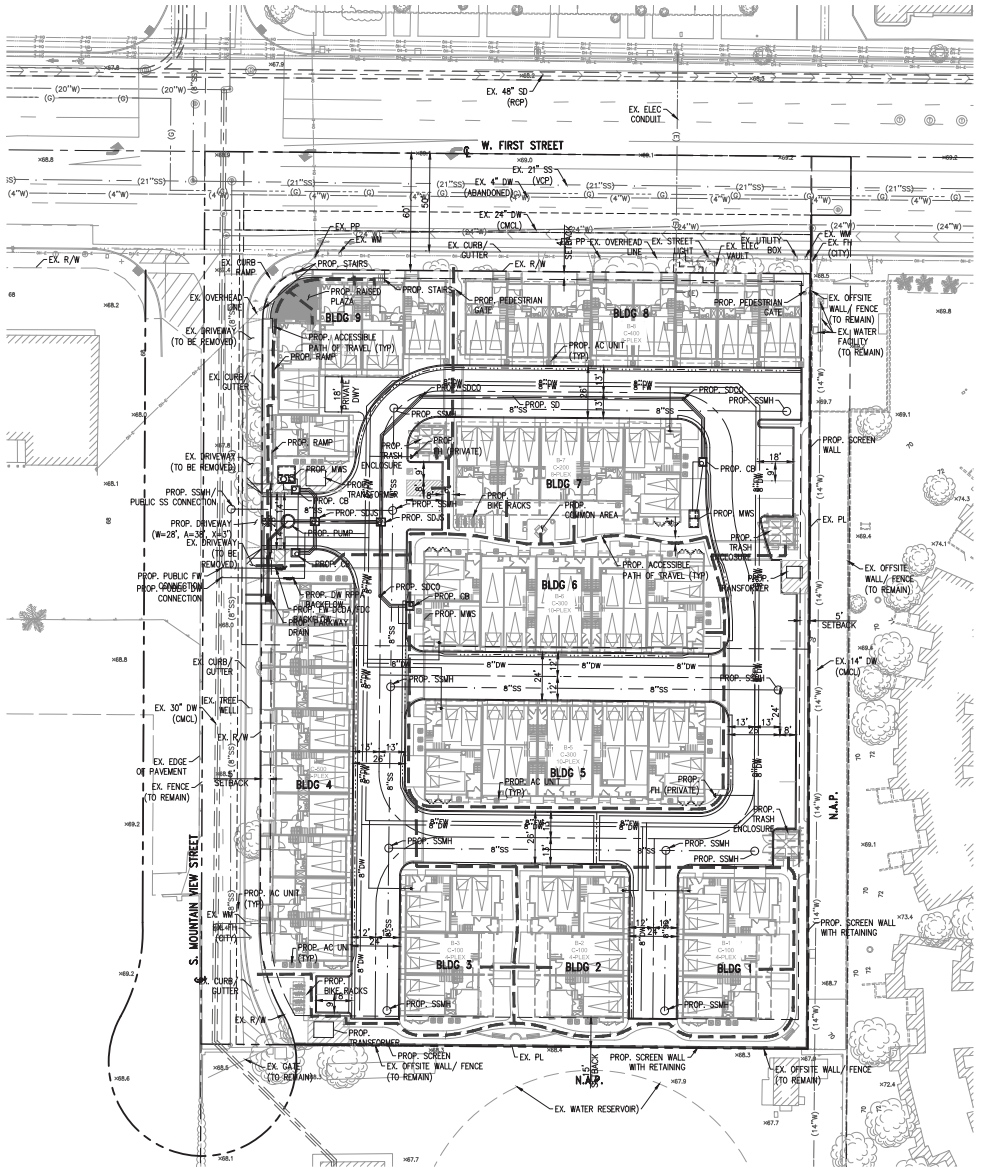

1" = 30'

0 15 30 60

GENERAL INFORMATION:

1. DATE OF PREPARATION: MAY 27, 2025
2. DATE OF SURVEY: FEBRUARY 29, 2024
3. NET LOT AREA: 2.54 AC
4. EXISTING ZONING: (C-2) GENERAL COMMERCIAL/ (M-1) LIGHT INDUSTRIAL)
5. PROPOSED ZONING: SPECIFIC DEVELOPMENT (SD)
6. EXISTING LAND USE: GENERAL COMMERCIAL/ LOW-MEDIUM DENSITY RESIDENTIAL
7. PROPOSED LAND USE: SPECIFIC DEVELOPMENT (SD)
8. CONTOUR INTERVAL IS 1 FOOT.
7. ALL DIMENSIONS ARE APPROXIMATE.
8. ALL IMPROVEMENTS REQUIRED BY THE CITY OF SANTA ANA SHALL BE INSTALLED TO THE SATISFACTION OF THE CITY ENGINEER.
9. ONSITE SANITARY SEWER SYSTEM SHALL BE PRIVATE AND CONSIST OF PVC (SDR-35) PIPE MATERIALS (OR APPROVED EQUAL).
10. ONSITE PROPOSED DOMESTIC WATER SHALL BE PRIVATE AND CONSIST OF PVC DR-14 (C-900) PIPE MATERIALS (OR APPROVED EQUAL) WITH INDIVIDUAL WATER METERS. WATER METER VAULTS AND CITY OWNED WATER METERS WILL BE PLACED WITHIN A PUBLIC UTILITY EASEMENT IN FAVOR OF THE CITY OF SANTA ANA, AS DIRECTED BY CITY DURING PLAN CHECK.
11. ONSITE PROPOSED STORM DRAIN SYSTEM SHALL BE PRIVATE AND CONSIST OF HDPE PIPE MATERIALS (OR APPROVED EQUAL).
12. ONSITE DRIVEWAYS/ALLEYS SHALL BE PRIVATE WITH PUBLIC NON-EXCLUSIVE EASEMENT FOR VEHICULAR ACCESS, ACCESS RIGHTS IN, OVER, ACROSS UPON AND THROUGH SAID TRACT IN FAVOR OF CITY OF SANTA ANA.
13. THE SUBJECT PROPERTY FALLS WITH IN "ZONE A – NO BASE FLOOD ELEVATIONS DETERMINED" PER FEMA MAP NO. 06059C0256J, A PRINTED PANEL, EFFECTIVE DECEMBER 3, 2009.
14. THIS SITE WILL BE DESIGNED AND CONSTRUCTED IN ACCORDANCE WITH THE CALIFORNIA REGIONAL WATER QUALITY CONTROL BOARD SANTA ANA REGION ORDER NO. R8-2009-0030 DISCHARGE REQUIREMENTS (NPS4 PERMIT).
15. THIS PROJECT WILL REQUIRE FILING, PROCESS, AND RECORDING OF CC&R'S FOR THE MAINTENANCE AND THE COST SHARING RESPONSIBILITY OF THE FUTURE COMMON UTILITY FACILITIES SERVING THIS SITE, INCLUDING BUT NOT LIMITED TO PRIVATE WATER, FIRE, AND SEWER SYSTEMS.
16. NO GATES ARE PROPOSED IN THIS PROJECT. ANY PROPOSED GATE WILL BE SUBJECT TO ADDITIONAL REVIEW AND COMMENTS.
17. ANY STREET TREE REMOVAL WITHIN THE PUBLIC RIGHT-OF-WAY IS SUBJECT TO APPROVAL BY THE ENVIRONMENTAL & TRANSPORTATION ADVISORY COMMITTEE (ETAC). THEREFORE, PROVIDE TO THE CITY OF SANTA ANA A LETTER REQUESTING THE REMOVAL OF EXISTING TREE(S) THAT CONFLICTS WITH THE PROPOSED IMPROVEMENTS. THE CITY WILL PRESENT THE INFORMATION TO THE ETAC COMMITTEE FOR ACTION.
18. THE BMPS, SHOWN ON THE APPROVED SITE PLAN ARE ONLY PRELIMINARY AND WILL BE REVISED OR MODIFIED AS NECESSARY UPON COMPLETION OF THE WQMP. PRIOR TO THE ISSUANCE OF THE GRADING PERMIT, THE APPROVED GRADING/UTILITY PLAN SHALL INCORPORATE ALL REQUIRED STRUCTURAL BMPS.
19. ALL PROPOSED IMPROVEMENTS AS SHOWN HEREON TO BE CONSTRUCTED AND INSTALLED BY SUBDIVIDER/ DEVELOPER, AND/OR AT THE SUBDIVIDER/ DEVELOPER'S EXPENSE IN ACCORDANCE WITH THE CITY DESIGN STANDARDS AND SPECIFICATIONS, THE SANTA ANA MUNICIPAL CODE, APPROVED STREET IMPROVEMENT PLANS AND REQUIREMENTS OF THE STATE OF CALIFORNIA SUBDIVISION MAP ACT.
20. APPROPRIATE PRIVATE BACKFLOW PREVENTER REQUIRED FOR ALL FIRE SERVICE, DOMESTIC, AND LANDSCAPE WATER METER PER GRADING AND STREET IMPROVEMENT PLANS.
21. ANY ONSITE EASEMENT AFFECTED BY THE LOCATION OF THE PROPOSED BUILDINGS SHALL BE QUITCLAIMED, AND A RECORDED COPY WILL BE SUBMITTED TO THE CITY PRIOR TO THE ISSUANCE OF A BUILDING PERMIT.
22. DEVELOPER TO REMOVE/ REPLACE ALL DAMAGE CURB & GUTTER, AND REPLACEMENT WITH NEW CURB & GUTTER.
23. ANY ASPHALT PAVEMENT DISTURBANCE BEYOND GRIND AND OVERLAY LIMITS SHOWN ON THE THIS MAP SHALL BE IN COMPLIANCE WITH THE STREET MORATORIUM REQUIREMENTS.
    NOTE: THE ASPHALT PAVEMENT ON FIRST STREET IS SCHEDULED TO BE REHABILITATED BY THE END OF 2024 THROUGH A CAPITAL IMPROVEMENT PROJECT (CIP). IF THE DEVELOPMENT PROJECT'S TIMING ALIGNS WITH THE CITY'S PROJECT, THE ASPHALT PAVEMENT REHABILITATION MAY INSTEAD BE ABLE TO BE REPLACED WITH A FAIRSHARE CONTRIBUTION BY THE DEVELOPER TOWARDS THE CIP.
24. ALL PROPOSED UTILITIES SHALL BE UNDERGROUND.
25. IF ANY CEQA IS DONE, A VMT STUDY WILL BE NEEDED.
26. PROPOSED TRASH ENCLOSURES SHALL BE FULLY ROOFED.

PROPOSED EASEMENTS:

A INDICATES AN EASEMENT FOR INGRESS AND EGRESS FOR EMERGENCY AND PUBLIC SECURITY VEHICLE PURPOSES DEDICATED TO THE CITY OF SANTA ANA

B INDICATES AN EASEMENT FOR PUBLIC UTILITY AND PUBLIC STREET PURPOSES DEDICATED TO THE CITY OF SANTA ANA

EXISTING EASEMENTS:

(F) DENOTES PLOTTED ITEM.

11 THE TERMS AND PROVISIONS CONTAINED IN THE DOCUMENT ENTITLED "DEED" RECORDED JULY 16, 1891 IN BOOK 56 OF DEEDS, PAGE 83.

(DOCUMENT ILLEGIBLE)

(13) AN EASEMENT FOR RIGHT OF WAY FOR BOLSA AVENUE AND INCIDENTAL PURPOSES, RECORDED MAY 18, 1953 AS BOOK 2504, PAGE 534 OF OFFICIAL RECORDS.
IN FAVOR OF: COUNTY OF ORANGE

(14) AN EASEMENT FOR CONSTRUCTION AND MAINTENANCE OF WATER MAINS AND INCIDENTAL PURPOSES, RECORDED MAY 28, 1962 AS BOOK 6124, PAGE 677 OF OFFICIAL RECORDS.
IN FAVOR OF: CITY OF SANTA ANA

(15) AN EASEMENT FOR WATER MAINS AND INCIDENTAL PURPOSES, RECORDED JUNE 24, 1963 AS BOOK 6601, PAGE 827 OF OFFICIAL RECORDS.
IN FAVOR OF: CITY OF SANTA ANA

(17) AN EASEMENT FOR STREET HIGHWAY AND ALLEY AND INCIDENTAL PURPOSES, RECORDED APRIL 5, 1965 AS BOOK 7470, PAGE 790 OF OFFICIAL RECORDS.
IN FAVOR OF: CITY OF SANTA ANA
SUCH ALLEY EASEMENT GRANTED THEREIN WAS SUBSEQUENTLY VACATED BY THE DOCUMENT
RECORDED OCTOBER 24, 1980, AS INSTRUMENT #38240

(18) AN EASEMENT FOR STREET, HIGHWAY AND ALLEY AND INCIDENTAL PURPOSES, RECORDED APRIL 8, 1965 AS BOOK 7476, PAGE 444 OF OFFICIAL RECORDS.
IN FAVOR OF: CITY OF SANTA ANA
SUCH ALLEY EASEMENT GRANTED THEREIN WAS SUBSEQUENTLY VACATED BY THE DOCUMENT
RECORDED OCTOBER 24, 1980, AS INSTRUMENT #38240

(20) AN EASEMENT FOR PUBLIC UTILITIES AND INCIDENTAL PURPOSES, RECORDED DECEMBER 6, 1983 AS INSTRUMENT NO. 83-555675 OF OFFICIAL RECORDS.
IN FAVOR OF: SOUTHERN CALIFORNIA EDISON COMPANY

PREPARED BY:

BEVERLEY PROFESSIONAL ENGINEER
BRUCE P. MCDONALL
C 80705
CIVIL
STATE OF CALIFORNIA

C&V CONSULTING, INC.
CIVIL ENGINEERING
LAND PLANNING & SURVEYING
9320 IRVINE CENTER DRIVE
IRVINE, CALIFORNIA 92618
(949) 581-8900
INFO@CVCINC.NET
WWW.CVCINC.NET

PREPARED FOR:

STORM PROPERTIES, INC.
970 W. 190TH ST., SUITE 995
TORRANCE, CA 90502

CITY OF SANTA ANA
DEPARTMENT OF PLANNING AND DEVELOPMENT

VESTING TENTATIVE TRACT MAP NO. 19391
PRELIMINARY SITE PLAN
4320 W. FIRST STREET & 201 S. MOUNTAIN VIEW STREET
SANTA ANA, CA 92703

PROJECT NO. STRM-005

SHEET 2 OF 6

DATE 5/30/2025

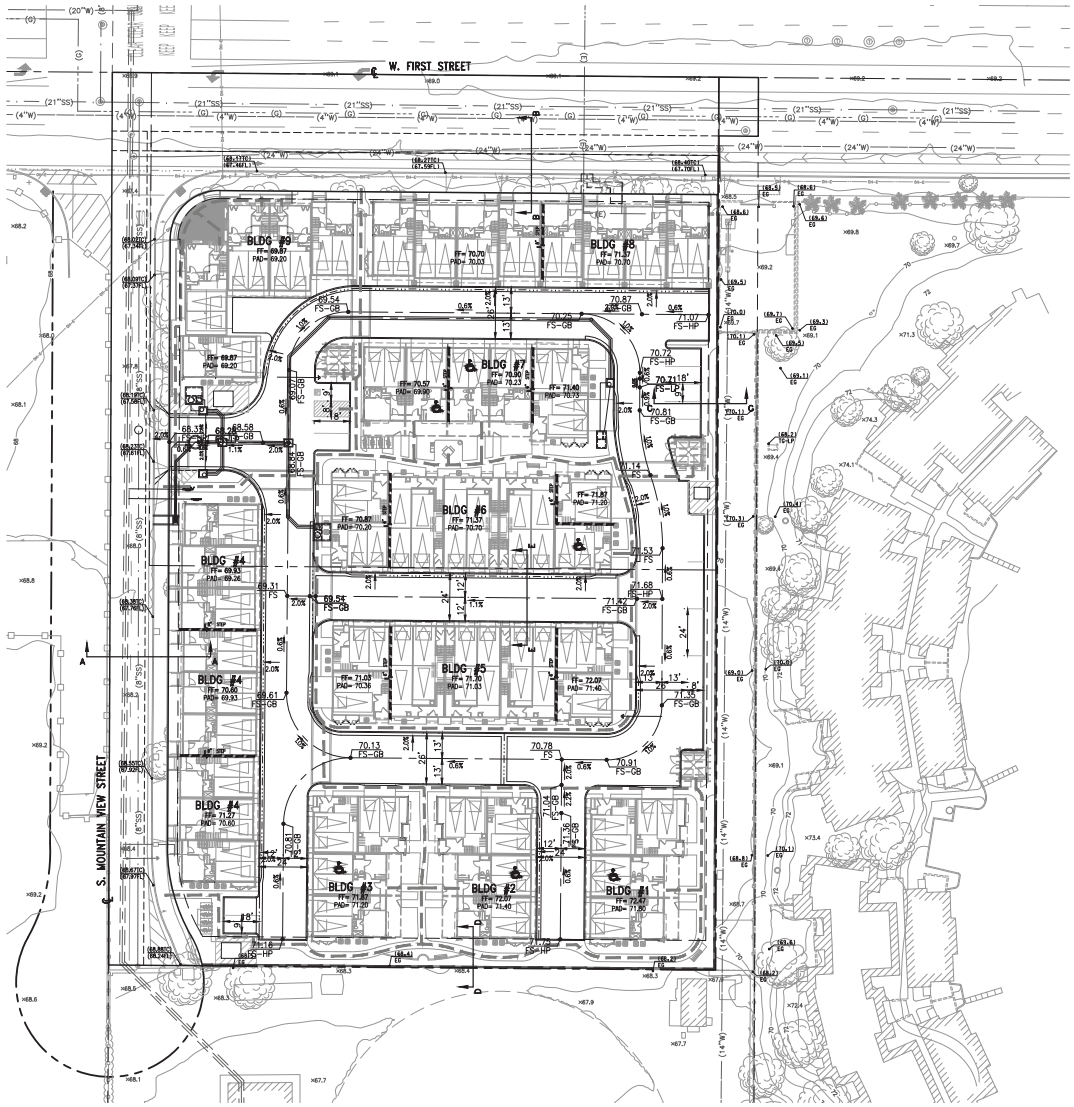

LEGEND:

- CENTERLINE
- EX. R/W
- PROP. R/W
- EX. PL
- SETBACK
- EXISTING LOT LINE
- EASEMENT
- ADA PATH OF TRAVEL
- PROPOSED WALL
- PROPOSED PCC PAVEMENT
- PROPOSED DECORATIVE PAVEMENT
- PROPOSED 2-3" GRIND/ OVERLAY
- 15'X15' SIGHT TRIANGLE

1" = 30'

0 15 30 60

PREPARED BY:	PREPARED FOR:		
BEVERLEY P. MCDONALL C 80705 CIVIL STATE OF CALIFORNIA C&V CONSULTING, INC. CIVIL ENGINEERING LAND PLANNING & SURVEYING 9302 IRVINE CENTER DRIVE IRVINE, CALIFORNIA 92618 (949) 581-8888 INFO@CVCINC.NET WWW.CVCINC.NET	STORM PROPERTIES, INC. 970 W. 190TH ST., SUITE 995 TORRANCE, CA 90502	**CITY OF SANTA ANA** DEPARTMENT OF PLANNING AND DEVELOPMENT **VESTING TENTATIVE TRACT MAP NO. 19391** **PRELIMINARY GRADING PLAN** 4320 W. FIRST STREET & 201 S. MOUNTAIN VIEW STREET SANTA ANA, CA 92703	PROJECT NO. STRM-005 SHEET 3 OF 6

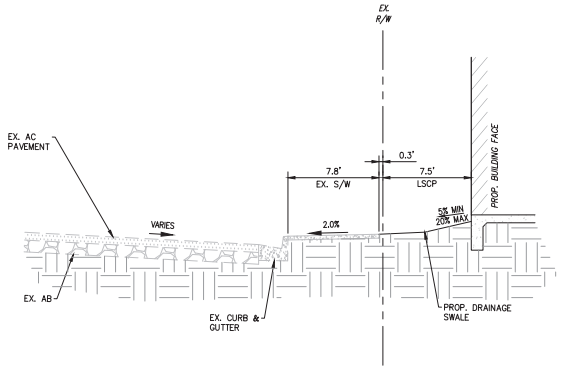

SECTION A–A
S. MOUNTAIN VIEW R/W
N.T.S.

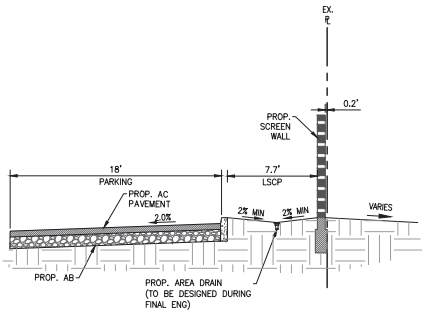

SECTION C–C
EAST ℄
N.T.S.

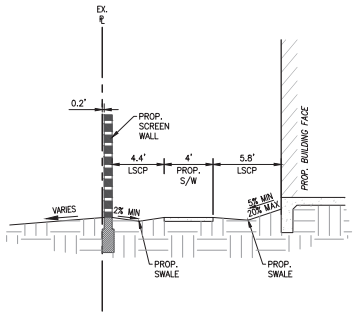

SECTION D–D
SOUTH ℄
N.T.S.

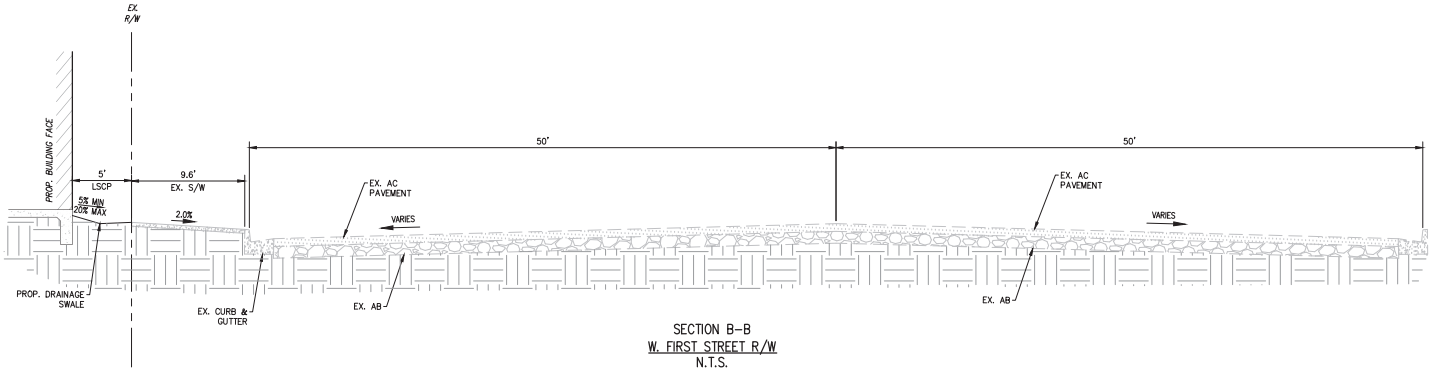

SECTION B–B
W. FIRST STREET R/W
N.T.S.

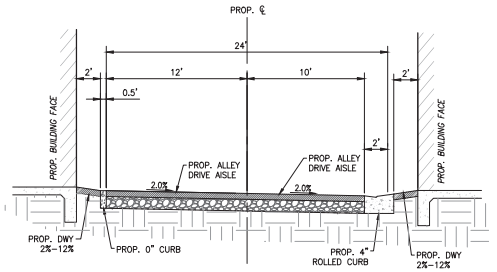

SECTION E–E
PRIVATE DRIVE/FIRE LANE
N.T.S.

PREPARED BY:

BERKLEY PROFESSIONAL ENGINEER — DAVID P. McDONALL — C 80705 — CIVIL — STATE OF CALIFORNIA

C&V CONSULTING, INC.
CIVIL ENGINEERING
LAND PLANNING & SURVEYING
2302 IRVINE CENTER DRIVE
IRVINE, CALIFORNIA 92618
(949) 474-0809
INFO@CVCINC.NET
WWW.CVCINC.NET

PREPARED FOR:

STORM PROPERTIES, INC.
970 W. 190TH ST., SUITE 995
TORRANCE, CA 90502

CITY OF SANTA ANA
DEPARTMENT OF PLANNING AND DEVELOPMENT

VESTING TENTATIVE TRACT MAP NO. 19391
PRELIMINARY SECTIONS
4320 W. FIRST STREET & 201 S. MOUNTAIN VIEW STREET
SANTA ANA, CA 92703

PROJECT NO. STRM-005

SHEET 4 OF 6

DATE 5/30/2025

LEGEND:

- CENTERLINE
- EX. R/W
- PROP. R/W
- EX. PL
- SETBACK
- EXISTING LOT LINE
- EASEMENT
- PROPOSED STORM DRAIN
- EXISTING STORM DRAIN
- 4"DW — PROPOSED DOMESTIC WATER
- (DW) — EXISTING DOMESTIC WATER
- 8"FW — PROPOSED FIRE WATER
- (FW) — EXISTING FIRE WATER
- PROPOSED SANITARY SEWER
- EXISTING SANITARY SEWER
- (G) — EXISTING GAS
- EXISTING ELECTRIC
- PROPOSED WALL
- PROPOSED PCC PAVEMENT
- UNIT NUMBER
- UNIT TYPE

ABBREVIATIONS:

BNDY	BOUNDARY
CB	CATCH BASIN
C&G	CURB & GUTTER
CLF	CHAIN LINK FENCE
CO	CLEANOUT
CV	CONTROL VALVE
DCDA	DOUBLE CHECK DETECTOR ASSEMBLY
DU	DRY UTILITY
DW	DOMESTIC WATER
DWY	DRIVEWAY
ELEC	ELECTRIC
ESMT	EASEMENT
EX.	EXISTING
FH	FIRE HYDRANT
FW	FIRE WATER
FDC	FIRE DEPARTMENT CONNECTION
JS	JUNCTION STRUCTURE
MH	MANHOLE
OH	OVERHEAD ELECTRICAL LINES
PKWY	PARKWAY
PL	PROPERTY LINE
PP	POWER POLE
PROP	PROPOSED
RPPA	REDUCED PRESSURE PRINCIPLE ASSEMBLY
R/W	RIGHT OF WAY
SF	SQUARE FOOT
SD	STORM DRAIN
SS	SANITARY SEWER
ST	STALL
STLT	STREETLIGHT
S/W	SIDEWALK
TB	TRUST BLOCK
TYP	TYPICAL
WM	WATER METER
WV	WATER VALVE
XFMR	TRANSFORMER

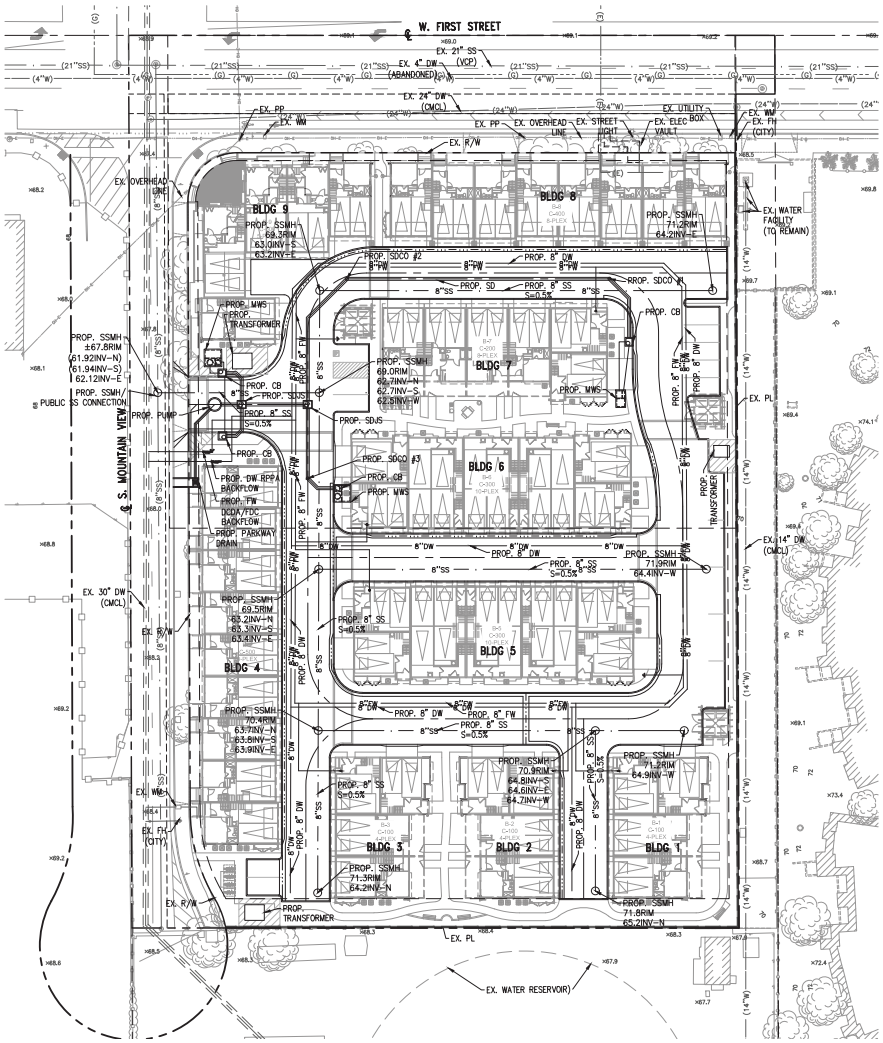

PROPOSED IMPROVEMENTS:

ALL PROPOSED IMPROVEMENTS AS SHOWN HEREON TO BE CONSTRUCTED AND INSTALLED BY SUBDIVIDER/ DEVELOPER, AND/ OR AT THE SUBDIVIDER/ DEVELOPER'S EXPENSE IN ACCORDANCE WITH THE CITY DESIGN STANDARDS AND SPECIFICATIONS, THE SANTA ANA MUNICIPAL CODE, APPROVED STREET IMPROVEMENT PLANS AND REQUIREMENTS OF THE STATE OF CALIFORNIA SUBDIVISION MAP ACT.

STATEMENT OF IMPROVEMENTS:

APPROXIMATE IMPROVEMENTS PROPOSED BY THIS TENTATIVE MAP.

OFFSITE IMPROVEMENTS:

1. XXX

ONSITE IMPROVEMENTS:

1. XXX

NOTE:

ANY WORK PROPOSED WITHIN AN EASEMENT AND/ OR OFFSITE AREAS SHALL REQUIRE A SIGNED LETTER AND/ OR AGREEMENT FROM ALL EASEMENT HOLDERS GRANTING PERMISSION OF PROPOSED WORK.

PREPARED BY:

BEVERLEY PROFESSIONAL ENGINEER — BRUCE P. MCDONALL — C 80705 — CIVIL — STATE OF CALIFORNIA

CONSULTING, INC. CIVIL ENGINEERING LAND PLANNING & SURVEYING
2302 PARK CENTER DRIVE
IRVINE, CALIFORNIA 92618
(949) 553-0666
INFO@CVDINC.NET
WWW.CVDINC.NET

PREPARED FOR:

STORM PROPERTIES, INC.
970 W. 190TH ST., SUITE 995
TORRANCE, CA 90502

CITY OF SANTA ANA
DEPARTMENT OF PLANNING AND DEVELOPMENT

VESTING TENTATIVE TRACT MAP NO. 19391
PRELIMINARY UTILITY PLAN
4320 W. FIRST STREET & 201 S. MOUNTAIN VIEW STREET
SANTA ANA, CA 92703

PROJECT NO. STRM-005

SHEET 5 OF 6

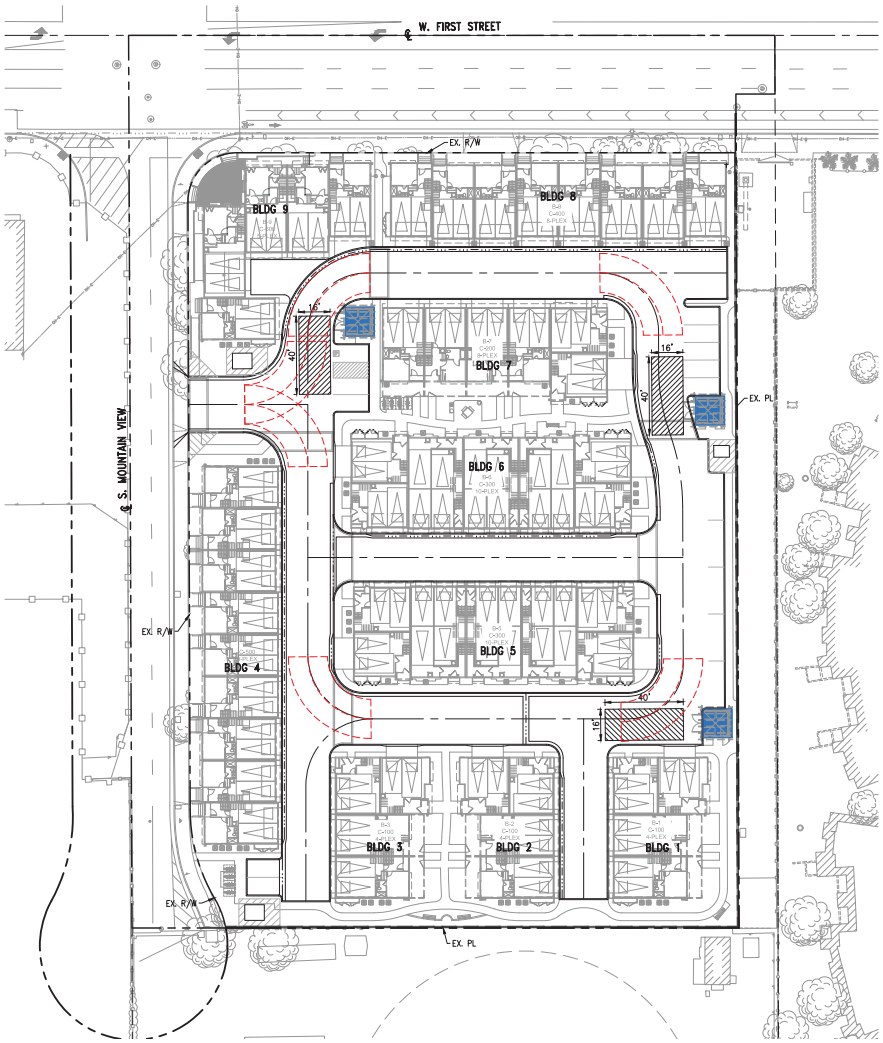

LEGEND:

COMMUNAL TRASH ENCLOSURE

40'X16' STAGING AREA
25' VERTICAL CLEARANCE
13' VERTICAL CLEARANCE FOR SCOUT TRUCK

TRASH TRUCK TURNING RADIUS
42' RADIUS ON 90' TURN
20' WIDE

NOTES:

1. NO TRASH CHUTES PROPOSED.
2. MINIMUM 40'X16' STAGING AREA AVAILABLE ON SERVICE DAYS FROM 6:00 AM TO 6:00 PM.
3. MINIMUM VERTICAL CLEARANCE OF 25' AT THE STAGING AREA FOR BIN SERVICE CLEARANCE PROVIDED.
4. MINIMUM 13' VERTICAL CLEARANCE FOR SCOUT TRUCK PROVIDED.
5. ALL STAGING AREAS WILL BE PROVIDED ONSITE.
6. 42' TURNING RADIUS PROVIDED ON A 90' TURN.
7. ALL PRIVATE DRIVE AISLES AND ALLEYS TO SUSTAIN MINIMUM GROSS WEIGHT OF 60,000 LBS LOAD.
8. MAXIMUM SIZE OF BINS SHALL BE 4 CUBIC YARDS (CY) FOR TRASH, 3 CY FOR RECYCLE AND 0.33 CY FOR ORGANICS.
9. MAXIMUM NUMBER OF PICK-UPS IS 2 TIMES PER WEEK.

1" = 30'

0 15 30 60

PREPARED BY:

BERKLEY PROFESSIONAL ENGINEER
BLAKE P. McDONALL
C 80705
CIVIL
STATE OF CALIFORNIA

CSC CONSULTING, INC.
CIVIL ENGINEERING
LAND PLANNING & SURVEYING
2302 PARK CENTER DRIVE
IRVINE, CALIFORNIA 92618
(949) 581-8900
INFO@CSCINC.NET
WWW.CSCINC.NET

PREPARED FOR:

STORM PROPERTIES, INC.
970 W. 190TH ST., SUITE 995
TORRANCE, CA 90502

CITY OF SANTA ANA
DEPARTMENT OF PLANNING AND DEVELOPMENT

VESTING TENTATIVE TRACT MAP NO. 19391
WASTE MANAGEMENT PLAN
4320 W. FIRST STREET & 201 S. MOUNTAIN VIEW STREET
SANTA ANA, CA 92703

PROJECT NO.
STRM-005

SHEET
6
OF
6

DATE 5/30/2025

City of Santa Ana
County of Orange/Santa Ana Region
Priority Project

Preliminary Water Quality Management Plan (WQMP)

Project Address:

201 S. MOUNTAINVIEW STREET & 4320 WEST 1ST STREET

SANTA ANA, CA 92704

TTM 19391, LOT 1

APN: 188-021-10, 188-021-11, & 188-021-12

Prepared for:

STORM PROPERTIES, Inc

970 West 190th Street, #995

Torrance, Ca 90502

Alan Kwan

(310) 986-2128

Prepared by:

C&V Consulting, Inc./ Dane McDougall, P.E.

9830 Irvine Center Drive, Irvine, CA 92618

(949) 916-3800/ dmcdougall@cvc-inc.net

May 2025

Project Owner's Certification			
Planning Application No. (If applicable)	TBD	Grading Permit No.	TBD
Tract/Parcel Map and Lot(s) No.	TTM 19391, Lot 1	Building Permit No.	TBD
Address of Project Site and APN (If no address, specify Tract/Parcel Map and Lot Numbers)			201 S. Mountainview Street and 4320 W. 1st Street, Santa Ana, CA APN: 188-021-10, 188-021-11, & 188-021-12

This Water Quality Management Plan (WQMP) has been prepared for Storm Properties, Inc by C&V Consulting, Inc. The WQMP is intended to comply with the requirements of the County of Orange NPDES Storm water Program requiring the preparation of the plan.

The undersigned, while it owns the subject property, is responsible for the implementation of the provisions of this plan , including the ongoing operation and maintenance of all best management practices (BMPs), and will ensure that this plan is amended as appropriate to reflect up-to-date conditions on the site consistent with the current Orange County Drainage Area Management Plan (DAMP) and the intent of the non-point source NPDES Permit for Waste Discharge Requirements for the County of Orange, Orange County Flood Control District and the incorporated Cities of Orange County within the Santa Ana Region. Once the undersigned transfers its interest in the property, its successors-in-interest shall bear the aforementioned responsibility to implement and amend the WQMP. An appropriate number of approved and signed copies of this document shall be available on the subject site in perpetuity.

Owner: Storm Properties/ Alan Kwan			
Title			
Company	Storm Properties, Inc		
Address	970 W. 190th Street Suite 995 Torrance, Ca 90502		
Email			
Telephone #	310.986.2128		
I understand my responsibility to implement the provisions of this WQMP including the ongoing operation and maintenance of the best management practices (BMPs) described herein.			
Owner Signature		Date	

Preparer (Engineer): Dane McDougall, P.E.			
Title	President	PE Registration #	80705
Company	C&V Consulting, Inc		
Address	9830 Irvine Center Drive, Irvine, CA 92618		
Email	dmcgoudall@cvc-inc.com		
Telephone #	(949) 916-3800		

I hereby certify that this Water Quality Management Plan is in compliance with, and meets the requirements set forth in, Order No. R8-2009-0030/NPDES No. CAS618030, of the Santa Ana Regional Water Quality Control Board.

Preparer Signature		Date	
Place Stamp Here			

Contents

Page No.

Section I	Permit(s) and Water Quality Conditions of Approval or Issuance	1
Section II	Project Description	2
Section III	Site Description	8
Section IV	Best Management Practices (BMPs)	12
Section V	Inspection/Maintenance Responsibility for BMPs	25
Section VI	BMP Exhibit (Site Plan)	29
Section VII	Educational Materials	30

Attachments

Attachment A . . . . . TGD Worksheets & Figures

Attachment B . . . . . WQMP Exhibit

Attachment C . . . . . Site BMPs

Attachment D . . . . . Geotechnical Report & Infiltration Evaluation

Attachment E . . . . . Operation & Maintenance Plan

Attachment F . . . . . Notice of Transfer of Responsibility

Attachment G . . . . . Educational Materials

Section I Permit(s) and Water Quality Conditions of Approval or Issuance

Project Infomation			
Permit/Application No. (If applicable)	TBD	Grading or Building Permit No. (If applicable)	TBD
Address of Project Site (or Tract Map and Lot Number if no address) and APN	4320 W. First Street & 201 S. Mountain View Street Santa Ana, Ca 92705		

Water Quality Conditions of Approval or Issuance	
Water Quality Conditions of Approval or Issuance applied to this project. (Please list verbatim.)	Water Quality Conditions of Approval have not been issued at this time.

Conceptual WQMP	
Was a Conceptual Water Quality Management Plan previously approved for this project?	This is the Conceptual WQMP

Watershed-Based Plan Conditions	
Provide applicable conditions from watershed - based plans including WIHMPs and TMDLS.	n/a

Section II Project Description

II.1 Project Description

<table>
<tr><th colspan="5">Description of Proposed Project</th></tr>
<tr><td>Development Category (From Model WQMP, Table 7.11-2; or -3):</td><td colspan="4">All significant redevelopment projects, where significant redevelopment is defined as the addition or replacement of 5,000 or more square feet of impervious surface on an already developed site. Redevelopment does not include routine maintenance activities that are conducted to maintain original line and grade, hydraulic capacity, original purpose of the facility, or emergency redevelopment activity required to protect public health and safety.
If the redevelopment results in the addition or replacement of less than 50 percent of the impervious area on-site and the existing development was not subject to WQMP requirement, the numeric sizing criteria discussed in Section 7.II-2.0 only applies to the addition or replacement area. If the addition or replacement accounts for 50 percent or more of the impervious area, the Project WQMP requirements apply to the entire development.</td></tr>
<tr><td>Project Area (ft²): 110,607</td><td colspan="3">Number of Units: 60</td><td>SIC Code: n/a</td></tr>
<tr><td rowspan="2">Project Area</td><td colspan="2">Pervious</td><td colspan="2">Impervious</td></tr>
<tr><td>Area (acres or sq ft)</td><td>Percentage</td><td>Area (acres or sq ft)</td><td>Percentage</td></tr>
<tr><td>Pre-Project Conditions</td><td>0.17 ac (7,235 sf)</td><td>6.5%</td><td>2.37 ac (103,372 sf)</td><td>93.5%</td></tr>
<tr><td>Post-Project Conditions *</td><td>0</td><td>0%</td><td>2.539 ac (110,607 sf)</td><td>100%</td></tr>
<tr><td>Drainage Patterns/Connections</td><td colspan="4">The existing site is generally split in half in regards to grading and drainage with a slight ridge in the middle of the site running in the east west direction. The northern portion of the site is graded so that runoff flows to two (2) concrete swales, each having a drain inlet at the more northern end of them. The southern portion of the site drains to a centrally located concrete swale, also with a drain inlet in it. W. 1st Street fronts northern property line and slopes from east to west. It is likely that onsite flows surface flow west to S. Mountain View Street and then into W 1st Street. Runoff entering W. 1st Street flows via curb and gutter to the west until it enters a catch basin, approximately 280’ west of the site at the southeastern corner of Newhope and 1st Street. Runoff continues into an underground 60-inch reinforced concrete pipe (RCP)</td></tr>
</table>

that is maintained by the city of Santa Ana. Flows are conveyed in this pipe and are discharged into the East Garden Grove Wintersburg Channel just west of Andres Place. Runoff continues in the channel until discharging into the Pacific Ocean.

This site is located within Watershed C Los Alamitos East Garden Grove Bolsa Chica Watershed per the Orange County Flood Control District (OCFCD) Drainage System Map.

According to the Federal Emergency Management Agency (FEMA), FIRM rate map Number 06059C0256J, revised December 3, 2009, the site is located within the flood zone as follows: Zone A – No base flood elevations determined."

In the proposed condition, site runoff will be captured by four (4) proposed sump curb inlet catch basins. Low flows will be conveyed via dvert pipes into nearby modular wetland units for water quality treatment. When the water quality treatment flow rate is exceeded, runoff will be directed through the proposed underground storm drain system. The modular wetland units will also be equipped with internal bypass for flows that exceed the treatment flow rate. Onsite runoff will be discharged into S. Mountain View Street via Storm Drain Sump Pump through a proposed parkway drain.

During larger storm events or in the event the onsite storm drain system becomes inoperable, runoff will pond at the proposed catch basins near the proposed project entry along S. Mountain View Street and overflow over the existing driveway. Once runoff enters S. Mountain View Street, it will follow historic drainage patterns to the East Garden Grove Wintersburg Channel and ultimately discharge into the Pacific Ocean.

The Connector Pipe Screen (CPS) devices will be located onsite upstream of the proposed storm drain overflow pipes to mitigate the required full trash captures requirements.

All existing onsite storm drain connections, piping and inlets will be demolished and capped at the right-of-way as part of this development's construction.

*Post- Project perviousness was assumed to be 0% for conservative design. During final engineering, actual pervious coverage will be calculated as landscape plans become available.

Narrative Project Description: (Use as much space as necessary.)	The proposed development consists of 2.5 gross acres (2.539 net acres) as measured from the existing right of way. The site is bounded by W. 1st Street to the north, S. Mountain View Street to the west, the Santa Ana Public Works Agency West Pumping Station to the south, and the Parkside Court Apartments to the east. Currently the site is accessed by one (1) driveway along W. 1st Street and one (1) driveway along S. Mountain View Street. The existing site is occupied by a commercial building and associated parking lot. These items can be seen via historical aerial maps as early as June 2002. All onsite buildings and pavement will be demolished prior to the construction of the proposed development. All existing utilities will be cut and capped at the right of way. The proposed development will consist of 9 multifamily residential buildings totaling 60 units with associated drive aisles, parking, open space recreational area, landscaping, and a driveway entrance off of S. Mountain View Street. The proposed development has been designed utilizing three (3) Drainage Management Area (DMA) based on the site's preliminary Grading and Drainage design. The roof downspouts roof located along the property line will outlet onto pervious landscaping or will be collected within an onsite area drain system. Runoff in the private drive aisles will be collected by four (4) curb inlet catch basins in sump conditions and route low flows through a dvert system into the proposed Biofiltration treatment device. The biofiltration systems are equipped with an internal bypass that will allow flows that exceed the design storm to bypass the filtration system and overflow into the proposed catch basins. When the design storm is exceeded, runoff will overflow within the catch basins and continue in the proposed underground storm drain system that conveys runoff to a proposed storm water sump pump. The sump pump will discharge runoff through a parkway drain into S. Mountain View Street. Emergency overflow will be conveyed over the proposed driveway along the western property line into S. Mountain View Street. The site has one (1) main entrance/exit on S. Mountain View Street. One (1) covered trash enclosure is proposed and located centrally to serve the development. Landscaping will be incorporated in open space areas including vegetation, plants, and trees. BMP selection for storm water runoff treatment has been described in Section IV of this report. Implementation of BMPs will be consistent with addressing the pollutants of concerns generated by commercial use. No car washing, outdoor storage or food processing areas will be incorporated into this project. The project will be serviced by proposed domestic/ fire water services laterals and a proposed private sewer system will be gravity feed to one (1) of point connection to an existing public sewer main located within S. Mountain View Street. Refer to the Preliminary WQMP Exhibit located within Attachment B of this report for additional information. Long-term maintenance is planned to be handled by the owner or an appointed Homeowner's Association (HOA).

II.2 Potential Stormwater Pollutants

Pollutants of Concern			
Pollutant	Check One for each: E=Expected to be of concern N=Not Expected to be of concern		Additional Information and Comments
Suspended-Solid/ Sediment	E ☒	N ☐	Expected by proposed landscaped areas.
Nutrients	E ☒	N ☐	Expected by proposed landscaped areas.
Heavy Metals	E ☒	N ☐	Expended by proposed onsite streets and parking areas.
Pathogens (Bacteria/Virus)	E ☒	N ☐	Expected by proposed residence and pets.
Pesticides	E ☒	N ☐	Expected by proposed landscaped areas.
Oil and Grease	E ☒	N ☐	Expected by uncovered parking areas.
Toxic Organic Compounds	E ☐	N ☒	Per TGD, Table 2.1 this pollutant is not expected for attached residential developments.
Trash and Debris	E ☒	N ☐	Expected by proposed residence.

II.3 Hydrologic Conditions of Concern

☒ No – Show Map

☐ Yes – Describe applicable hydrologic conditions of concern below. *Refer to Section 2.2.3 in the TGD. Refer to calculations below.*

Per the TGD Figure 3, Susceptibility Analysis of Santa Ana River dated February 2013, the project site drains to stabilized/ engineered facilities, therefore HCOCs do not exist. Refer to Attachment A for the TGD Figure.

II.4 Post Development Drainage Characteristics

Post–development drainage will be consistent with a proposed attached Multi-Family Residential project. The tributary areas and direction of run-off flows for the proposed site are delineated on the Preliminary WQMP Exhibit based on the grading and drainage design located within Attachment B of this report.

The site is located within the Los Alamitos, East Garden Grove, Bolsa Chica Watershed (Watershed C) per the OCFCD Drainage System Map. In the existing condition, the site generally sheet flows overland in a westerly direction towards the public right-of-way of W. Mountain View Street.

Proposed drainage runoff will be collected by a series of area drains, four (4) proposed sump catch basins, that will route runoff into a proposed Modular Wetlands System (MWS) Biofiltration system within the proposed private drive aisle. Water quality flows will be treated via the proposed Biofiltration system and discharge to an existing storm drain manhole near the southwest corner of the site.

Runoff from the site enters the OCFCD Storm Drain system in W. 1st Street. Runoff continues west to the East Garden Grove Wintersburg Channel. The East Garden Grove Wintersburg Channel ultimately discharges into the Pacific Ocean.

The proposed drainage pattern matches the existing historical drainage pattern from the site.

II.5 Property Ownership/Management

The property is currently owned by Storm Properties. The Owner will be responsible for the long-term maintenance of the project's storm water facilities (MWS Facilities) and conformance to this WQMP after construction is complete.

A Notice of Transfer of Responsibility located in Attachment E of this report and should be executed as part of any ownership transfer after construction is complete.

Stormwater Quality infrastructure will not be transferred to any Public Agencies.

Section III Site Description

III.1 Physical Setting

Name of Planned Community/Planning Area (if applicable)	N/A
Location/Address	201 S. Mountain View Street and 4320 W. 1st Street
	Santa Ana, CA 92704
General Plan Land Use Designation	General Commercial (GC) and Medium Density Residential (MR-15)
Existing Zoning	General Commercial (C-2) and Light Industrial (M-1)
Proposed Zoning	Urban Neighborhood (NU-20)
Acreage of Project Site	2.539 acres
Predominant Soil Type	According to the TGD, Figure XVI-2a and the Geotechnical Investigation performed by Alta California Geotechnical, Inc dated February 12, 2025 the site is classified with Soil Type C. **For site specific soil information, refer to Section III.2 and Attachment D of this report.**

III.2 Site Characteristics

Site Characteristics	
Precipitation Zone	The site falls under the 0.8" per the TGD, Figure XVI-1, Rainfall Zones map. Refer to Attachment A of this report for a copy of the map.
Topography	The site elevation ranges from approximately 70 feet above mean sea level (msl) to 68 feet. The site appears to drain overland to existing drain inlets. The grades for all adjacent properties are within 1.1' or less of the site, there is no evidence of any existing retaining conditions around the perimeter of the property. It is possible for retaining conditions to occur after the development of the project.
Drainage Patterns/Connections	The existing site is generally split in half in regards to grading and drainage with a slight ridge in the middle of the site running in the east west direction. The northern portion of the site is graded so that runoff flows to two (2) concrete swales, each having a drain inlet at the more northern end of them. The southern portion of the site drains to a centrally located concrete swale, also with a drain inlet in it. W. 1st Street fronts northern property line and slopes from east to west. It is likely that onsite flows surface flow west to S. Mountain View Street and then into W 1st Street. Runoff entering W. 1st Street flows via curb and gutter to the west until it enters a catch basin, approximately 280' west of the site at the southeastern corner of Newhope and 1st Street. Runoff continues into an underground 60-inch reinforced concrete pipe (RCP) that is maintained by the city of Santa Ana. Flows are conveyed in this pipe and are discharged into the East Garden Grove Wintersburg Channel just west of Andres Place. Runoff continues in the channel until discharging into the Pacific Ocean.
Soil Type, Geology, and Infiltration Properties	Per the Geotechnical Engineering Investigation prepared by NorCal Engineering, dated January 8, 2025, the site's geotechnical properties are described as the following: "The field explorations revealed the existing earth materials to consist of fill and alluvium soil. Detailed descriptions of the subsurface conditions are listed on the boring logs in Appendix A. It should be noted that the transition from one soil type to another as shown on the boring logs is approximate and may in fact be a gradual transition. The soils encountered are described as follows: Fill: A fill soil classifying as a brown, fine to medium grained, silty SAND with occasional gravel was encountered to depths ranging from 1.5 to 3 feet below ground surface. These soils were noted to be dense and moist. Alluvium: An undisturbed natural soil classifying as a brown fine to

<table>
<tr><td></td><td>medium grained, silty SAND to a light brown, fine to medium grained SAND was encountered beneath the fill soils. These soils were observed to be medium dense and damp to wet. Deeper soils consisted of sandy silts to silty sands and sands which were noted to be medium stiff/dense to dense and wet."

Refer to Attachment D of this report for a copy of the Geotechnical report.</td></tr>
<tr><td>Hydrogeologic (Groundwater) Conditions</td><td>Per the Geotechnical Engineering Investigation prepared by NorCal Engineering, dated January 8, 2025, the site's groundwater properties are described as the following:

"The overall engineering characteristics of the earth material were relatively uniform with each excavation. Groundwater was encountered at a depth of 9 and 10 feet below existing ground surface and some caving occurred in the deeper cohesionless soils below groundwater."

Refer to Attachment D of this report for a copy of the Geotechnical report.</td></tr>
<tr><td>Geotechnical Conditions (relevant to infiltration)</td><td>Per the Geotechnical Engineering Investigation prepared by NorCal Engineering, dated January 8, 2025, the site's geotechnical infiltration properties are described as the following:

"Infiltration tests were performed in accordance with the Orange County Technical Guidance Document (OCTGD) Appendix VII - Infiltration Rate Evaluation Protocol and Factor of Safety Recommendations dated December 20, 2013.

A truck mounted Simco 2800 Drill Rig equipped with a hollow stem auger was used to excavate the exploratory borings to depths of 3 and 5 below existing ground surface. The borings consisted of six-inch diameter test holes. A three-inch diameter perforated PVC casing with solid end cap was installed in the borings and then surrounded with gravel materials to prevent caving. The infiltration holes were carefully filled with clean water and refilled after two initial readings.

Based upon the initial rates of infiltration at each location, test measurements were measured at selected maximum intervals thereafter. Measurements were obtained by using an electronic tape measure with 1 /16-inch divisions and timed with a stopwatch.

The subsurface soils exhibit the following field infiltration rates which do not include a factor of safety. The drainage disposal system shall also incorporate the safety factor required by the county standard. Calculations are based using the Porchet Method (aka Inverse Borehole Method) and are provided in Appendix D.

<table>
<tr><th>Boring/ Test No.</th><th>Depth</th><th>Soil Classification</th><th>Field Infiltration Rate</th></tr>
<tr><td>B-1/ TH-1</td><td>5′</td><td>SAND</td><td>37.5 in/hr</td></tr>
<tr><td>B-2/ TH-2</td><td>3′</td><td>SAND</td><td>75 in/hr</td></tr>
</table>
</td></tr>
</table>

	Based upon the presence of shallow groundwater at a depth of 9 and 10 feet below ground surface, the infiltration of stormwater into the subsurface soils is deemed not feasible. In addition, the site was calculated with moderate to high liquefaction potential. It is recommended that an alternate means of storing and disposing of stormwater be evaluated by the project civil engineer. All systems must meet the latest city and/or county specifications and the California Regional Water Quality Control Board (CRWQCB) requirements. It is recommended that foundations shall be setback a minimum distance of 10 feet from the drainage disposal system and the bottom of footing shall be a minimum of 10 feet from the expected zone of saturation. The boundary of the zone of saturation may be assumed to project downward from the top of the permeable portion of the disposal system at an inclination of 1 to 1 or flatter, as determined by the geotechnical engineer. " Refer to Attachment D of this report for a copy of the Geotechnical report.
Off-Site Drainage	No off-site drainage enters the property.
Utility and Infrastructure Information	Utilities are proposed to be underground. No special setbacks are needed or proposed. Proposed storm drain, sanitary sewer, domestic water, and underground fire water system will be private and maintained by the owner or an appointed Homeowner's Association (HOA).

III.3 Watershed Description

Receiving Waters	East Garden Grove-Wintersburg Channel, Bolsa Chica Ecological Reserve, Pacific Ocean
303(d) Listed Impairments	East Garden Grove-Wintersburg Channel – None Bolsa Chica Ecological Reserve - Toxicity
Applicable TMDLs	East Garden Grove-Wintersburg Channel – Ammonia (Unionized), Arsenic, Cadmium, Chlorpryifos, Chromium, Copper, Indicator Bacteria, Lead, Mercury, Nickel, pH, Selenium, Silver, Water Temperature, Zinc Bolsa Chica Ecological Reserve – Arsenic, Cadmium, Chlorpryifos, Copper, Diazinon, Indicator Bacteria, Lead, Malathion, Mercury, Nickel, Dissolved Oxygen, Selenium, Silver, Toxicity, Zinc
Pollutants of Concern for the Project	Anticipated and Potential Pollutants of Concern for Attached Residential Development is Suspended Solid/Sediments, Pathogens (Bacteria/Virus), Nutrients (Oxygen Demanding Substances), Pesticides, Oil & Grease, Heavy Medals, and Trash & Debris.
Environmentally Sensitive and Special Biological Significant Areas	The project is not located within any known Environmentally Sensitive Areas (ESA) or Areas of Special Biological Significance (ASBS).

Section IV Best Management Practices (BMPs)

IV. 1 Project Performance Criteria

(NOC Permit Area only) Is there an approved WIHMP or equivalent for the project area that includes more stringent LID feasibility criteria or if there are opportunities identified for implementing LID on regional or sub-regional basis?		YES ☐	NO ☒
If yes, describe WIHMP feasibility criteria or regional/sub-regional LID opportunities.	n/a		

Project Performance Criteria	
If HCOC exists, list applicable hydromodification control performance criteria (Section 7.II-2.4.2.2 in MWQMP)	Per 7.II-2.4.2.2 of the MWQMP, the volumes and time of concentration of stormwater runoff for the post development condition do not significantly exceed those of the predevelopment condition for a two-year frequency storm event (a difference of five percent or less is considered insignificant). If the excess volume cannot feasibly be retained, then retain the excess volume from the two-year runoff event to the maximum extent possible and implement on-site hydromodification controls such that post development runoff two-year peak flow rate is not greater than 110 percent of the predevelopment runoff two-year peak flow rate.
List applicable LID performance criteria (Section 7.II-2.4.3 from MWQMP)	According to Section 7.II-2.4.3 of the MWQMP Priority Projects must biotreat/ biofilter the 85th percentile, 24-hour storm event (Design Capture Volume). This project proposes to utilize Biotreatment BMPs to treat the required stormwater runoff.
List applicable treatment control BMP performance criteria (Section 7.II-3.2.2 from MWQMP)	If it is not feasible to meet LID performance criteria through retention and/or biotreatment provided on-site or at a sub-regional/regional scale, then treatment control BMPs shall be provided on-site or off-site prior to discharge to waters of the US. Since the project proposes to satisfy LID performance criteria, therefore treatment control performance criteria are also fully satisfied. Sizing of treatment control BMPs (Biofiltration Systems) shall be based flow-based for the area being redeveloped to medium and high effectiveness for reducing the primary pollutants of concern, which will be considered in compliance. This project proposes to utilize Biotreatment BMPs to treat the required storm water runoff. Refer to Attachment C for manufacturer's specifications for the proposed Biofiltration BMP. Refer to Section IV.3.4, Biotreatment BMPs for additional information regarding BMP selection.

Calculate LID design storm capture volume for Project.	The proposed project residential site will generate a total DCV of 6,639 cf. DMA A: Vdesign = (0.9)(0.8)(1.35 ac)(43,560 sf/ac)(1 ft/12 in) = 3,528.4 cf DMA B: Vdesign = (0.9)(0.8)(0.99 ac)(43,560 sf/ac)(1 ft/12 in) = 2,587.5 cf DMA C: Vdesign = (0.9)(0.8)(0.2 ac)(43,560 sf/ac)(1 ft/12 in) = 522.7 cf Due to infiltration being infeasible at the site, biofiltration vaults will treat the required water quality design flow rate. The site will generate a total water quality design flowrate of 0.595 cfs. DMA A: Qdesign = (0.90)(0.26 in/hr)(1.35ac) = 0.316 cfs DMA B: Qdesign = (0.90)(0.26 in/hr)(0.99 ac) = 0.232 cfs DMA C: Qdesign = (0.90)(0.26 in/hr)(0.2 ac) = 0.047 cfs Refer to Worksheet B and D located within Attachment A of this report.

IV.2. Site Design and Drainage

The site proposes three (3) Drainage Management Areas as indicated on the Preliminary WQMP Exhibit. The DMAs were based on the Grading and Drainage site design. DMAs will incorporate an area drain systems to collect and convey storm water runoff from landscape, surface and roof drainage areas to the proposed treatment device. Pervious coverages located throughout the site will promote impervious area dispersion from roof and sidewalk runoff, where applicable.

Street/ parking lot surface runoff will be collected and conveyed via a concrete longitudinal v-gutter to four (4) curb inlet catch basin which will convey runoff into a nearby proposed Modular Wetlands System (MWS), Biofiltration system for water quality treatment. An onsite area drain system will connect directly to the MWS Biofiltration system for treatment of landscaped areas. Treated runoff will be conveyed through the proposed onsite underground storm drain system to a proposed stormwater sump pump. The sump pump will discharge runoff through a proposed parkway drain into the public right-of-way of S. Mountain View Street. Runoff that exceeds the water quality treatment flow rate will be conveyed through the underground storm drain system to the stormwater sump pump and into the public right-of-way of S. Mountain View Street.

The Modular Wetland System (MWS) Biofiltration vaults are designed to provide a 3-phase treatment train. Initially, when the stormwater enters the system, a trash rack, filter media and settling chamber will capture large trash/ debris and sediment in the stormwater before entering the planting media. This system is designed to treat stormwater flow horizontally. Before the stormwater enters the planting or "wetland" chamber, the runoff flows through the 2nd phase, a pre-filter cartridge which captures fines TSS, metals, nutrients and bacteria. The pre-filter chamber eliminates additional maintenance of the planting area. The wetland chamber is the 3rd phase of the system which provides final treatment through a combination of physical, chemical and biological processes.

Connector Pipe Screen (CPS) devices will be located onsite upstream of the proposed storm drain overflow pipes to mitigate the required full trash captures requirements.

Refer the Preliminary WQMP Exhibit in Attachment B for the location of the proposed BMPs.

The proposed Biofiltration vault has been sized based on the impervious coverage and tributary area based on the DMA. Refer to the separately prepared Preliminary Grading Plan for additional information.

Drainage Management Area (DMA):

Refer to the Preliminary WQMP Exhibit in Attachment B of this report for referenced area designations.

Drainage Management Area (DMA)	Area (ac)	Required Treatment, Q (cfs)	Proposed BMPs
A	1.35	0.316	BIO-7: Proprietary Biofiltration
B	0.99	0.232	BIO-7: Proprietary Biofiltration
C	0.20	0.047	BIO-7: Proprietary Biofiltration

Refer to Worksheet D in Attachment A for treatment flow rate calculation.

IV.3 LID BMP Selection and Project Conformance Analysis

IV.3.1 Hydrologic Source Controls (HSCs)

Name	Included?
Localized on-lot infiltration	☐
Impervious area dispersion (e.g. roof top disconnection)	☐
Street trees (canopy interception)	☐
Residential rain barrels (not actively managed)	☐
Green roofs/Brown roofs	☐
Blue roofs	☐
Impervious area reduction (e.g. permeable pavers, site design)	☐
Other:	☐
Other:	☐
Other:	☐
Other:	☐
Other:	☐
Other:	☐
Other:	☐
Other:	☐

** HSC BMPs are not required since the site has been exempted based on HCOC map. Refer to Attachment A and Attachment E of this report for additional information.*

IV.3.2 Infiltration BMPs

Name	Included?
Bioretention without underdrains	☐
Rain gardens	☐
Porous landscaping	☐
Infiltration planters	☐
Retention swales	☐
Infiltration trenches	☐
Infiltration basins	☐
Drywells	☐
Subsurface infiltration galleries	☐
French drains	☐
Permeable asphalt	☐
Permeable concrete	☐
Permeable concrete pavers	☐
Other:	☐

Infiltration BMPs will not be utilized and have been determined to be infeasible for this site due to high groundwater levels and potential geotechnical hazards. Biotreatment BMPs will be utilized to provide the required treatment flow rates.

Refer to Table 2.7 Infiltration BMP Feasibility Worksheet located within Attachment A for additional information.

IV.3.3 Evapotranspiration, Rainwater Harvesting BMPs

Name	Included?
All HSCs; *See Section IV.3.1*	☐
Surface-based infiltration BMPs	☐
Biotreatment BMPs	☐
Above-ground cisterns and basins	☐
Underground detention	☐
Other:	☐
Other:	☐
Other:	☐

Evapotranspiration, Rainwater Harvesting BMPs will not be utilized and have been determined to be infeasible for this site due to development type, density and available amount of landscaped area for irrigation purposes. Refer to Worksheet J for feasibility calculations within Attachment A of this report. Biotreatment BMPs will be utilized to provide the required treatment flow rates.

IV.3.4 Biotreatment BMPs

Name	Included?
Bioretention with underdrains	☐
Stormwater planter boxes with underdrains	☐
Rain gardens with underdrains	☐
Constructed wetlands	☐
Vegetated swales	☐
Vegetated filter strips	☐
Proprietary vegetated biotreatment systems	☒
Wet extended detention basin	☐
Dry extended detention basins	☐
Other:	☐

Proprietary Vegetated Biotreatment Systems:

A Modular Wetland System (MWS) Biofiltration vault system will be utilized to capture and treat the stormwater runoff before leaving the site. The MWS Biofiltration system utilizes a 3-phase treatment train by collecting the stormwater runoff in a Pre-Treatment Chamber, Planting or "Wetland" Chamber and Discharge Chamber. Treated storm water runoff will be pumped and discharged into a proposed parkway drain on S. Mountain View Street.

Refer to Attachment C for additional manufacturer's BMP information.

The MWS Biofiltration vault systems were sized based on the treatment flow rate method per the Orange County Technical Guidance Document worksheets. Refer to Worksheet D in Attachment A for calculations.

DMA	Area (ac)	Required Treatment, Q (cfs)	MWS Model	Treatment Capacity, Q (cfs)
A	1.35	0.316	MWS-L-8-8 (3.95)	0.268
B	0.99	0.232	MWS-L-6-8 (3.95)	0.170
C	0.20	0.047	MWS-L-4-8 (3.95)	0.134
TOTAL	**2.54**	**0.595**		**0.572**

**Project-specific Modular Wetlands System (MWS) Biofiltration details will be provided during final engineering. Refer to additional manufacturer sizing information located within Attachment C of this report.*

Treated storm water runoff discharging from the MWS Biofiltration vault will enter a proposed stormwater sump pump system designed to meet the treatment flow rate. Pump sizing and details will provided during

final engineering.

Refer to Section V and Attachment E within this report for the project-specific Operation and Maintenance (O&M) Plan.

Conclusion:
GIS Coordinates:

DMA A: MWS-L-8-8 N 2218690.62', E 6051715.97'

DMA B: MWS-L-6-8 N 2218616.75', E 6051781.71'

DMA C: MWS-L-4-8 N 2218668.08', E 6051924.23'

IV.3.5 Hydromodification Control BMPs

Hydromodification Control BMPs	
BMP Name	**BMP Description**
n/a	n/a

Hydromodification Control BMPs are not required as this project is located within an HCOC exempt area. Refer to Section II.3 of this report for additional information.

IV.3.6 Regional/Sub-Regional LID BMPs

Regional/Sub-Regional LID BMPs
n/a

IV.3.7 Treatment Control BMPs

Treatment Control BMPs	
BMP Name	**BMP Description**
Connector Pipe Screen (CPS) Device	Connector Pipe Screen (CPS) device will be utilized prior to the proposed overflow storm drain pipe to provide full trash capture requirements.

IV.3.8 Non-structural Source Control BMPs

Non-Structural Source Control BMPs				
Identifier	**Name**	**Check One**		**If not applicable, state brief reason**
		Included	**Not Applicable**	
N1	Education for Property Owners, Tenants and Occupants	☒	☐	
N2	Activity Restrictions	☒	☐	
N3	Common Area Landscape Management	☒	☐	
N4	BMP Maintenance	☒	☐	
N5	Title 22 CCR Compliance (How development will comply)	☐	☒	Not applicable.
N6	Local Industrial Permit Compliance	☐	☒	Not applicable.
N7	Spill Contingency Plan	☒	☐	
N8	Underground Storage Tank Compliance	☐	☒	No Proposed underground storage tanks.
N9	Hazardous Materials Disclosure Compliance	☐	☒	No proposed hazardous materials.
N10	Uniform Fire Code Implementation	☒	☐	
N11	Common Area Litter Control	☒	☐	
N12	Employee Training	☒	☐	
N13	Housekeeping of Loading Docks	☐	☒	No proposed loading docks
N14	Common Area Catch Basin Inspection	☒	☐	
N15	Street Sweeping Private Streets and Parking Lots	☒	☐	
N16	Retail Gasoline Outlets	☐	☒	No proposed gasoline outlets

IV.3.9 Structural Source Control BMPs

Structural Source Control BMPs				
Identifier	**Name**	**Check One**		**If not applicable, state brief reason**
		Included	**Not Applicable**	
S1	Provide storm drain system stenciling and signage	☒	☐	
S2	Design and construct outdoor material storage areas to reduce pollution introduction	☐	☒	No proposed outdoor storage areas.
S3	Design and construct trash and waste storage areas to reduce pollution introduction	☒	☐	
S4	Use efficient irrigation systems & landscape design, water conservation, smart controllers, and source control	☒	☐	
S5	Protect slopes and channels and provide energy dissipation	☐	☒	No proposed slopes or channels.
	Incorporate requirements applicable to individual priority project categories (from SDRWQCB NPDES Permit)	☐	☒	Not Applicable.
S6	Dock areas	☐	☒	No proposed dock areas.
S7	Maintenance bays	☐	☒	No proposed maintenance bay areas.
S8	Vehicle wash areas	☐	☒	No proposed vehicle wash areas.
S9	Outdoor processing areas	☐	☒	No proposed outdoor processing areas.
S10	Equipment wash areas	☐	☒	No proposed equipment wash areas.
S11	Fueling areas	☐	☒	No proposed fueling areas.
S12	Hillside landscaping	☐	☒	No proposed hillside landscaping areas.
S13	Wash water control for food preparation areas	☐	☒	No wash water control for food preparation areas.
S14	Community car wash racks	☐	☒	No proposed community car washing racks.

IV.4 Alternative Compliance Plan (If Applicable)

IV.4.1 Water Quality Credits

<table>
<tr><th colspan="5">Description of Proposed Project</th></tr>
<tr><td colspan="5">Project Types that Qualify for Water Quality Credits (Select all that apply):</td></tr>
<tr><td colspan="2">☐Redevelopment projects that reduce the overall impervious footprint of the project site.</td><td colspan="2">☐Brownfield redevelopment, meaning redevelopment, expansion, or reuse of real property which may be complicated by the presence or potential presence of hazardous substances, pollutants or contaminants, and which have the potential to contribute to adverse ground or surface WQ if not redeveloped.</td><td>☐ Higher density development projects which include two distinct categories (credits can only be taken for one category): those with more than seven units per acre of development (lower credit allowance); vertical density developments, for example, those with a Floor to Area Ratio (FAR) of 2 or those having more than 18 units per acre (greater credit allowance).</td></tr>
<tr><td colspan="2">☐ Mixed use development, such as a combination of residential, commercial, industrial, office, institutional, or other land uses which incorporate design principles that can demonstrate environmental benefits that would not be realized through single use projects (e.g. reduced vehicle trip traffic with the potential to reduce sources of water or air pollution).</td><td colspan="2">☐ Transit-oriented developments, such as a mixed use residential or commercial area designed to maximize access to public transportation; similar to above criterion, but where the development center is within one half mile of a mass transit center (e.g. bus, rail, light rail or commuter train station). Such projects would not be able to take credit for both categories, but may have greater credit assigned</td><td>☐ Redevelopment projects in an established historic district, historic preservation area, or similar significant city area including core City Center areas (to be defined through mapping).</td></tr>
<tr><td>☐Developments with dedication of undeveloped portions to parks, preservation areas and other pervious uses.</td><td>☐ Developments in a city center area.</td><td>☐ Developments in historic districts or historic preservation areas.</td><td>☐ Live-work developments, a variety of developments designed to support residential and vocational needs together – similar to criteria to mixed use development; would not be able to take credit for both categories.</td><td>☐In-fill projects, the conversion of empty lots and other underused spaces into more beneficially used spaces, such as residential or commercial areas.</td></tr>
<tr><td>Calculation of Water Quality Credits
(if applicable)</td><td colspan="4">Water Quality credits will not be utilized on this development site.</td></tr>
</table>

IV.4.2 Alternative Compliance Plan Information

n/a

Section V Inspection/Maintenance Responsibility for BMPs

The property is currently owned by Storm Properties, Inc. The Owner will be responsible for the long-term maintenance of the project's storm water facilities and conformance to this WQMP after construction is complete.

A Notice of Transfer of Responsibility is located in Attachment E of this report and should be executed as part of any ownership transfer after construction is complete.

The owner will appoint a Homeowner's Association (HOA) to provide long term BMP maintenance for the proposed development upon completion of construction.

Owner/ Developer:
Storm Properties
970 W. 190th Street #995
Torrance, California 90502
Alan Kwan
(310) 986-2128

Homeowner's Association (HOA)
To be determined

The owner is aware of the maintenance responsibilities of the proposed BMPs. A funding mechanism is in place to maintain the BMPs at the frequency stated in the WQMP.

The following BMP Inspection/ Maintenance table will be completed as part of the final engineering. This table will include BMP description, responsible party(ies), required inspection/ maintenance routine and frequency.

BMP Inspection/Maintenance			
BMP	**Reponsible Party(s)**	**Inspection/ Maintenance Activities Required**	**Minimum Frequency of Activities**
N1: Education for Property Owners, Tenants, Occupants & Employees	HOA	Owner/ HOA to provide education material, a copy of the approved WQMP and Operation & Maintenance Plan (O&M) to new property owners, tenants, occupants & employees.	At time of hiring, leasing and/ or home purchase.
N3: Common Area Landscape Management	HOA	Owner/ HOA to hire professional landscape company to conduct maintenance of landscaping to meet current water efficiency and keep plants healthy and bio areas maintained with proper soil amendments.	Regular maintenance once a week and monthly inspection to determine deficiencies.
N4: BMP Maintenance	HOA	Owner/ HOA to hire professional BMP maintenance company to conduct regular inspections, repairs and cleanings per manufacturer's specifications.	A minimum 2 inspections/ cleanings per year per manufacturer's specifications prior to October 1st (before rainy season)
N10: Uniform Fire Code Implementation	HOA	Owner/ HOA to comply with fire regulations and keep informed of the latest	Comply with annual fire inspections and maintain building and access per the latest fire

		rules and requirements.	codes.
N11: Common Area Litter Control	HOA	Owner/ HOA to provide litter removal of site parking lot and landscape areas.	Once per week.
N12: Employee Training	HOA	The distribution of these materials will be the reasonability of the Owner/ HOA at the initial hiring of the employee.	At time of hiring.
N15: Private Street & Parking Lot Sweeping	HOA	Owner/ HOA to provide maintenance of Parking Lot and provide Street Sweeping services.	Weekly basis.
S4: Use efficient irrigation systems & landscape design, water conservation, smart controllers, and source control	HOA	Owner/ HOA to provide maintenance of landscaping to meet current water efficiency standards and keep plants healthily.	Regular maintenance once a week and monthly inspection to determine any water deficiencies.
N14: Common Area Catch Basin Inspections	HOA	Owner/ HOA shall inspection common areas where catch basins are located within the surrounding area and remove any trash/ debris.	Inspections/ Cleaning shall occur at least twice per month.
S1: Storm Drain System Stencilling & Signage	HOA	Owner/ HOA to inspect and repair as needed all onsite storm drain stencilling & signage.	Inspection should occur at minimum twice per year.

Connector Pipe Screen (CPS) Device	HOA	HOA will be required to hire a professional maintenance company to provide regular inspection, repairs, and cleaning per manufacturer's specifications. All trash/ debris and loose sediment/ silt shall be removed and screen replacement per manufacturer's specifications.	Inspections/ cleanings should occur at least two times per year and before the start of the rainy season (October 1st). Refer to Attachment C for additional information and manufacturer's specifications.
BIO-7: Modular Wetlands System (MWS) Biofiltration Vaults	HOA	Owner/ HOA will be required to hire a professional maintenance company to provide regular inspections, repairs and cleaning per manufacturer's specifications.	Inspections/ Cleanings should occur at least two times per year and before the start of the rainy season (October 1st). Refer to Attachment C for additional information and manufacturer's specifications.

Section VI BMP Exhibit (Site Plan)

VI.1 BMP Exhibit (Site Plan)

Refer to Attachment B of this report for the WQMP Exhibit which provides the location of all proposed BMPs and a site plan of the project.

During final engineering, refer to separately prepared Precise Grading plans for BMP cross sectional information and details.

VI.2 Submittal and Recordation of Water Quality Management Plan

Following approval of the Final Project-Specific WQMP, three copies of the approved WQMP (including BMP Exhibit, Operations and Maintenance (O&M) Plan, and Appendices) shall be submitted. In addition, these documents shall be submitted in a PDF format.

Each approved WQMP (including BMP Exhibit, Operations and Maintenance (O&M) Plan, and Appendices) shall be recorded in the Orange County Clerk-Recorder's Office, prior to close-out of grading and/or building permit. Educational Materials are not required to be included.

Section VII Educational Materials

Refer to the Orange County Storm Water Program (www.ocwatersheds.com) for a library of materials available.

Education Materials			
Residential Material (http://www.ocwatersheds.com)	**Check If Applicable**	**Business Material (http://www.ocwatersheds.com)**	**Check If Applicable**
The Ocean Begins at Your Front Door	☒	Tips for the Automotive Industry	☐
Tips for Car Wash Fund-raisers	☐	Tips for Using Concrete and Mortar	☐
Tips for the Home Mechanic	☒	Tips for the Food Service Industry	☐
Homeowners Guide for Sustainable Water Use	☒	Proper Maintenance Practices for Your Business	☐
Household Tips	☒	**Other Material**	**Check If Attached**
Proper Disposal of Household Hazardous Waste	☒		
Recycle at Your Local Used Oil Collection Center (North County)	☒		☐
Recycle at Your Local Used Oil Collection Center (Central County)	☐		☐
Recycle at Your Local Used Oil Collection Center (South County)	☐		☐
Tips for Maintaining a Septic Tank System	☐		☐
Responsible Pest Control	☒		☐
Sewer Spill	☒		☐
Tips for the Home Improvement Projects	☒		☐
Tips for Horse Care	☐		☐
Tips for Landscaping and Gardening	☒		☐
Tips for Pet Care	☒		☐
Tips for Pool Maintenance	☐		☐
Tips for Residential Pool, Landscape and Hardscape Drains	☐		☐
Tips for Projects Using Paint	☒		☐

Attachment A : Technical Guidance Figures & Worksheets

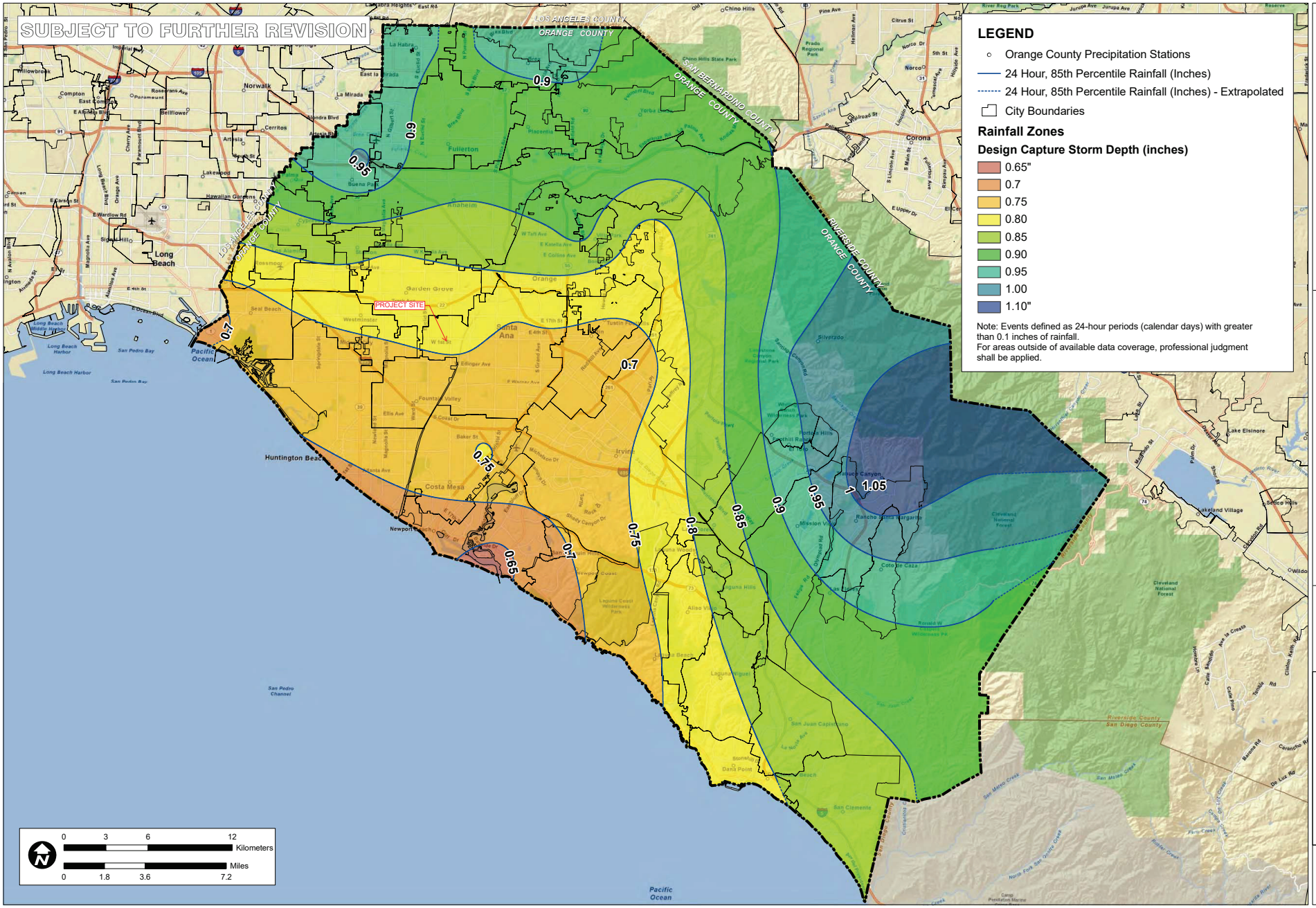

P:\9526\6-GIS\Mxds\Reports\InfiltrationFeasability_20110215\9526E_FigureXVI-1_RainfallZones_20110215.mxd

TITLE
RAINFALL ZONES

JOB
ORANGE COUNTY TECHNICAL GUIDANCE DOCUMENT
ORANGE CO. CA

SCALE	1" = 1.8 miles
DESIGNED	TH
DRAWING	TH
CHECKED	BMP
DATE	04/29/10
JOB NO.	9526-E

PACE Advanced Water Engineering

FIGURE
XVI-1

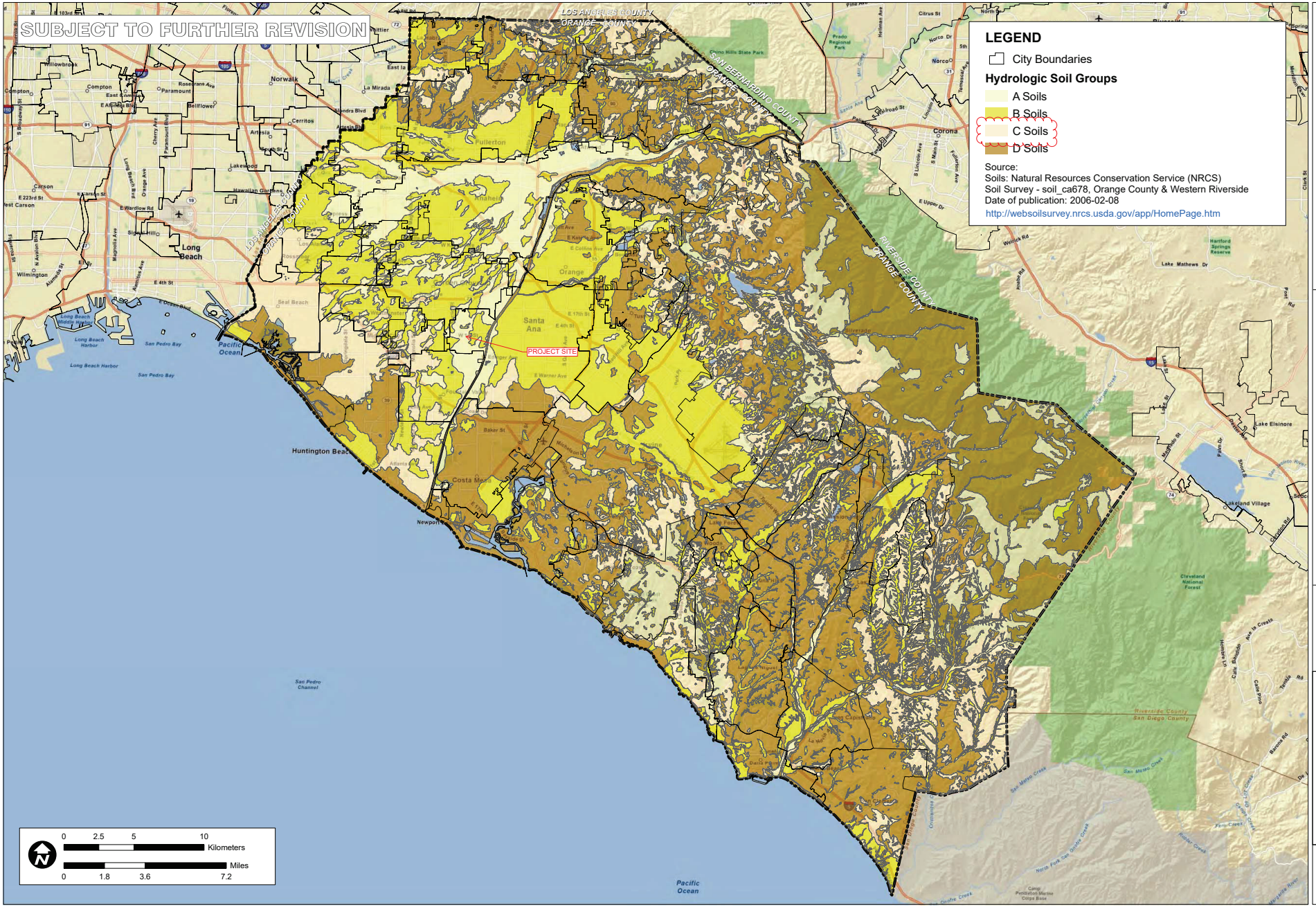

TITLE
NRCS HYDROLOGIC SOILS GROUPS

JOB
ORANGE COUNTY INFILTRATION STUDY
CA
ORANGE CO.

SCALE	1" = 1.8 miles
DESIGNED	TH
DRAWING	TH
CHECKED	BMP
DATE	02/09/11
JOB NO.	9526-E

PACE
Advanced Water Engineering

FIGURE
XVI-2a

P:\9526\Ex.6-GIS\Mxds\Reports\InfiltrationFeasability_20110215\9526E_FigureXVI-2a_HydroSoils_20110215.mxd

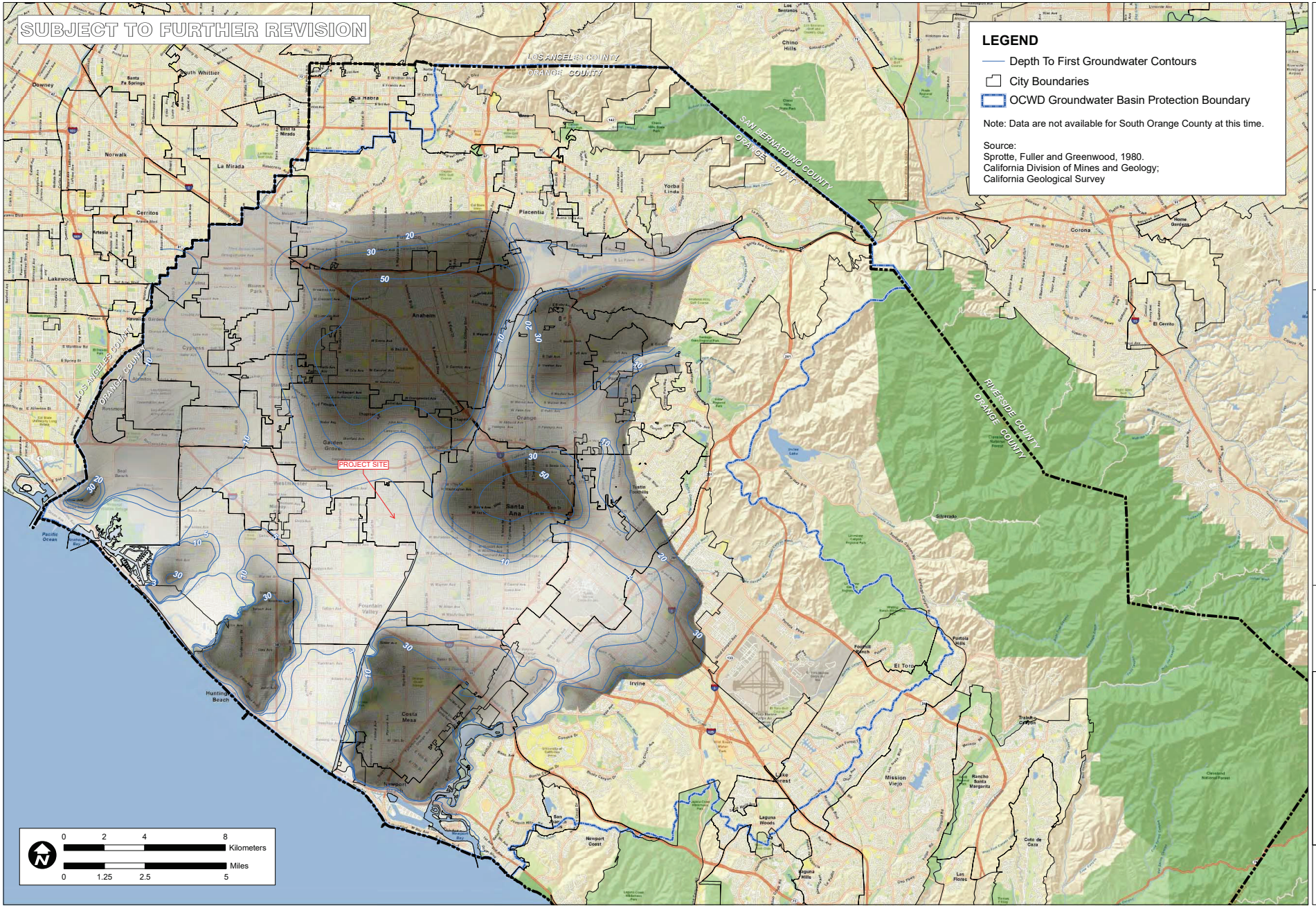

TITLE
NORTH ORANGE COUNTY
MAPPED DEPTH TO FIRST
GROUNDWATER

JOB
ORANGE COUNTY
INFILTRATION STUDY
ORANGE CO. CA

SCALE	1" = 1.25 miles
DESIGNED	TH
DRAWING	TH
CHECKED	BMP
DATE	02/09/11
JOB NO.	9526-E

PACE
Advanced Water Engineering

FIGURE
XVI-2d

P:\9526\Ex.6-GIS\Mxds\Reports\InfiltrationFeasability_20110215\9526E_FigureXVI-2d_DepthToGroundwaterOverview_20110215.mxd

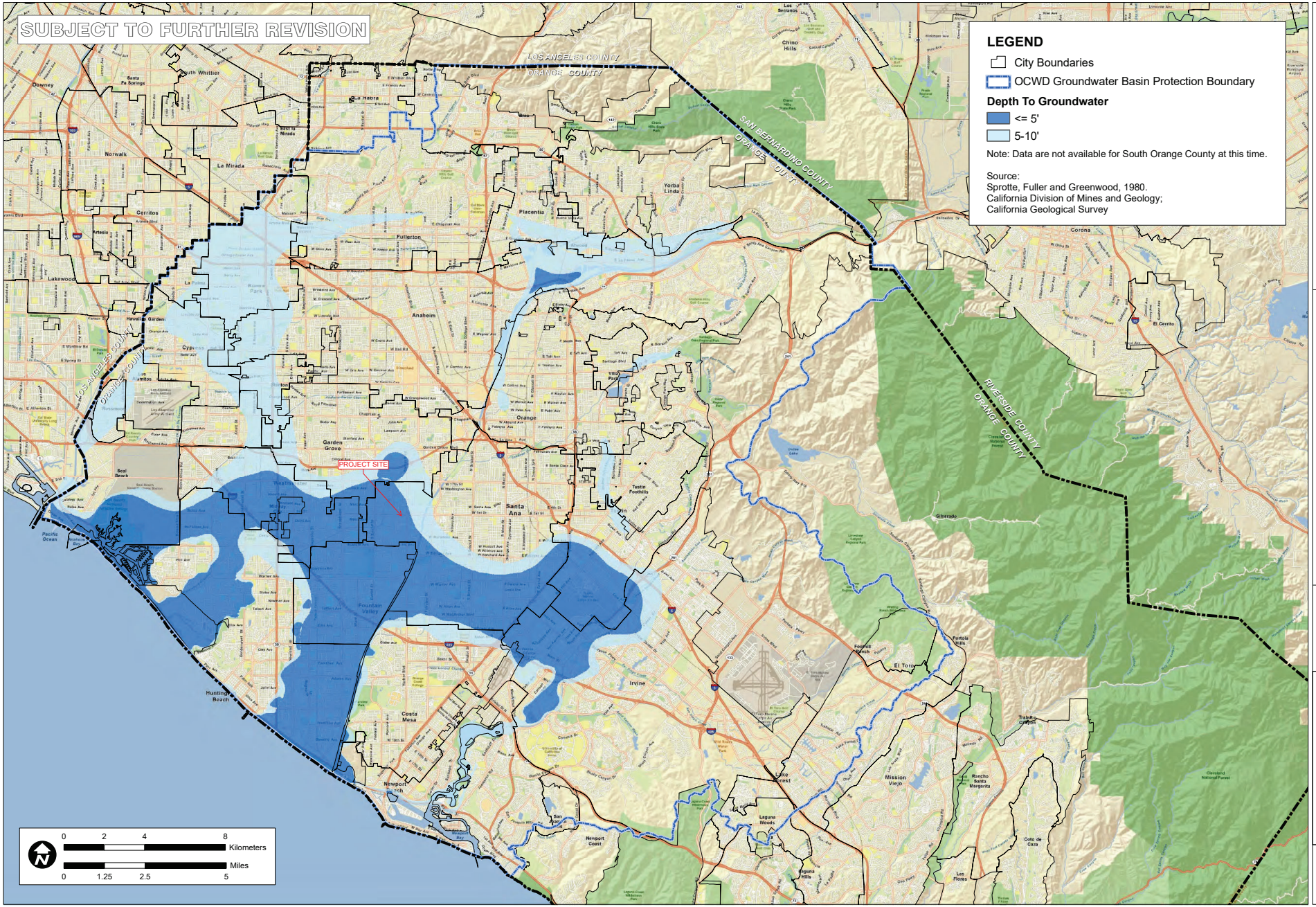

P:\9526\EV\6-GIS\Mxds\Reports\InfiltrationFeasability_20110215\9526E_FigureXVI-2e_DepthToGroundwater15ft_20110215.mxd

TITLE
NORTH ORANGE COUNTY
MAPPED SHALLOW GROUNDWATER

JOB
ORANGE COUNTY
INFILTRATION STUDY
ORANGE CO. CA

SCALE	1" = 1.25 miles
DESIGNED	TH
DRAWING	TH
CHECKED	BMP
DATE	02/09/11
JOB NO.	9526-E

PACE
Advanced Water Engineering

FIGURE
XVI-2e

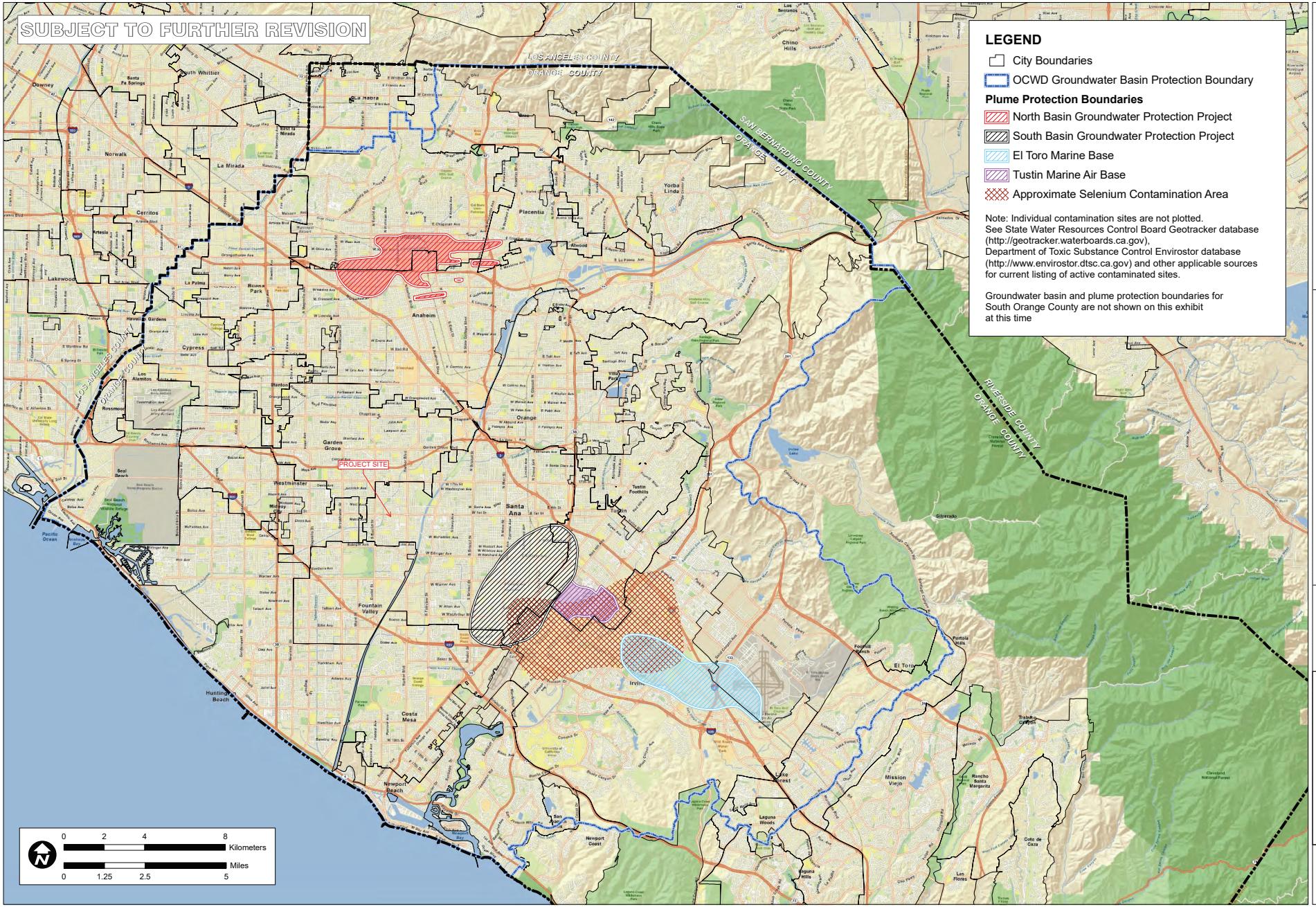

TITLE
NORTH ORANGE COUNTY GROUNDWATER PROTECTION AREAS

JOB
ORANGE COUNTY INFILTRATION STUDY
ORANGE CO., CA

SCALE	1" = 1.25 miles
DESIGNED	TH
DRAWING	TH
CHECKED	BMP
DATE	04/23/10
JOB NO.	9526-E

PACE
Advanced Water Engineering

FIGURE
XVI-2f

P:\9526\E\6-GIS\Mxds\Reports\InfiltrationFeasibility_20110215\9526E_FigureXVI-2f_NorthOCGroundwaterProtectionAreasStreetMap_20110215.mxd

SUSCEPTIBILITY MAP UPATE (FEB 2013)

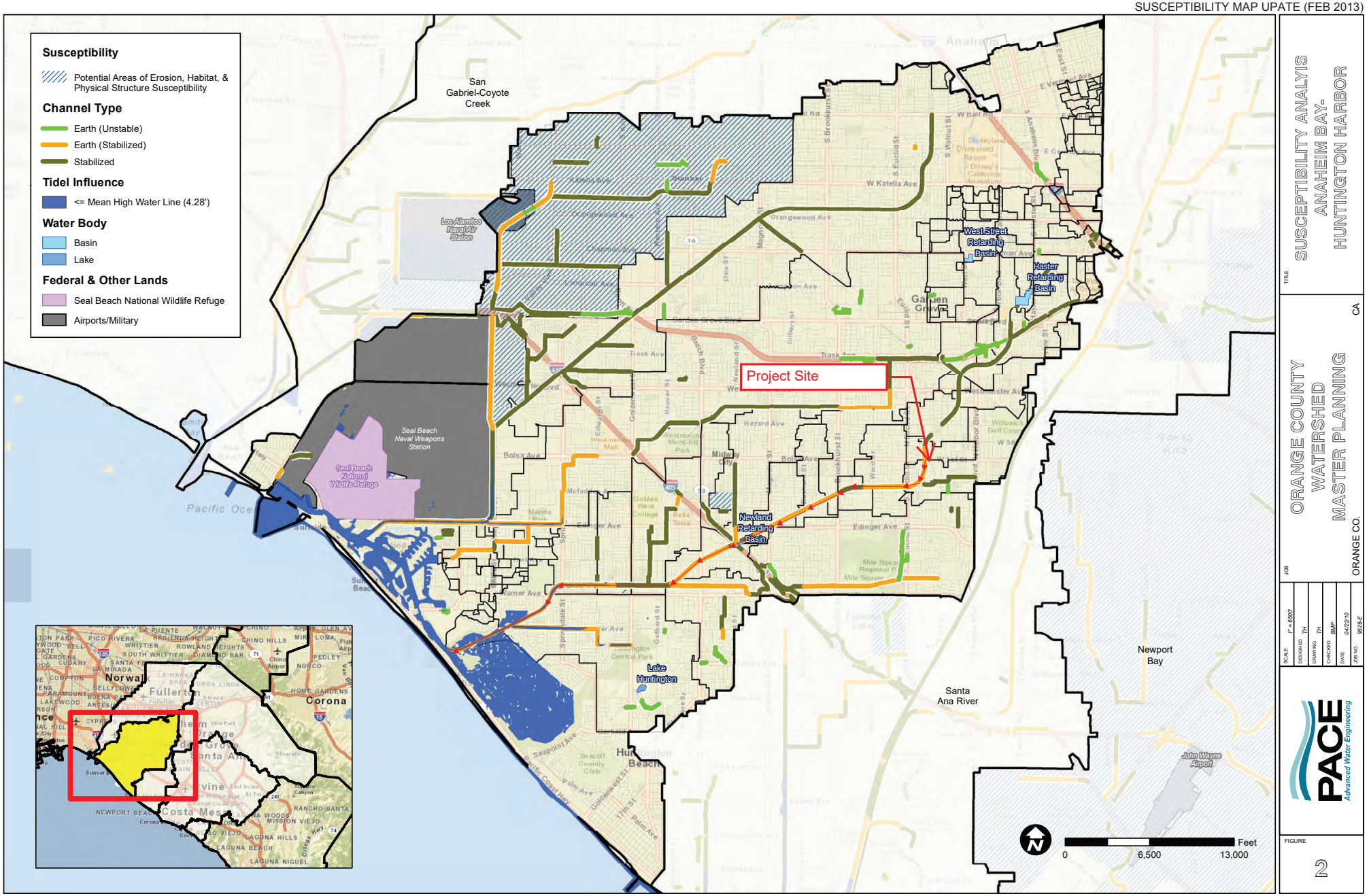

TITLE: SUSCEPTIBILITY ANALYIS ANAHEIM BAY-HUNTINGTON HARBOR

JOB: ORANGE COUNTY WATERSHED MASTER PLANNING — ORANGE CO. CA

SCALE	1" = 6500'
DESIGNED	TH
DRAWING	TH
CHECKED	BMP
DATE	04/23/10
JOB NO.	9526-E

PACE — Advanced Water Engineering

FIGURE 2

P:\9526E\v-GIS\Mxds\Workspace\SusceptIbleAnalysis_20100422\9526E_AnaheimBay_20100331.mxd

Table 2.7: Infiltration BMP Feasibility Worksheet

	Infeasibility Criteria	*Yes*	*No*
1	**Would Infiltration BMPs pose significant risk for groundwater related concerns?** Refer to Appendix VII (Worksheet I) for guidance on groundwater-related infiltration feasibility criteria.	X	
Provide basis: Per the Geotechnical Engineering Investigation prepared by NorCal Engineering, dated January 8, 2025 "Groundwater was encountered at a depth of 9 and 10 feet below existing ground surface and some caving occurred in the deeper cohesionless soils below groundwater"			
2	Would Infiltration BMPs **pose significant risk of increasing risk of geotechnical hazards that cannot be mitigated to an acceptable level**? (Yes if the answer to any of the following questions is yes, as established by a geotechnical expert): • The BMP can only be located less than 50 feet away from slopes steeper than 15 percent • The BMP can only be located less than eight feet from building foundations or an alternative setback. • A study prepared by a geotechnical professional or an available watershed study substantiates that stormwater infiltration would potentially result in significantly increased risks of geotechnical hazards that cannot be mitigated to an acceptable level.	X	
Provide basis: Per the Geotechnical Engineering Investigation prepared by NorCal Engineering, dated January 8, 2025 soils are susceptible to liquefaction			
3	Would infiltration of the DCV from drainage area **violate downstream water rights**?		X
Provide basis:			

Table 2.7: Infiltration BMP Feasibility Worksheet (continued)

	Partial Infeasibility Criteria	***Yes***	***No***
4	Is proposed infiltration facility **located on HSG D soils** or the site geotechnical investigation identifies presence of soil characteristics which support categorization as D soils?		X
Provide basis:			
5	Is **measured infiltration rate below proposed facility less than 0.3 inches per hour**? This calculation shall be based on the methods described in Appendix VII.		X
Provide basis:			
6	Would **reduction of over predeveloped conditions cause impairments to downstream beneficial uses, such as change of seasonality of ephemeral washes or increased discharge of contaminated groundwater to surface waters?**		X
Provide citation to applicable study and summarize findings relative to the amount of infiltration that is permissible:			
7	Would **an increase in infiltration over predeveloped conditions cause impairments to downstream beneficial uses, such as change of seasonality of ephemeral washes or increased discharge of contaminated groundwater to surface waters?**		X
Provide citation to applicable study and summarize findings relative to the amount of infiltration that is permissible:			

Table 2.7: Infiltration BMP Feasibility Worksheet (continued)

Infiltration Screening Results (check box corresponding to result):		
8	Is there substantial evidence that infiltration from the project would result in a significant increase in I&I to the sanitary sewer that cannot be sufficiently mitigated? (See Appendix XVII) Provide narrative discussion and supporting evidence:	No
9	If any answer from row 1-3 is yes: infiltration of any volume is **not feasible** within the DMA or equivalent. Provide basis:	Not Feasible
10	If any answer from row 4-7 is yes, infiltration is **permissible but is not presumed to be feasible for the entire DCV.** Criteria for designing biotreatment BMPs to achieve the maximum feasible infiltration and ET shall apply. Provide basis:	Not Feasible
11	If all answers to rows 1 through 11 are no, infiltration of the full DCV is potentially feasible, BMPs must be designed to infiltrate the full DCV to the maximum extent practicable.	Infiltration is Infeasible

Worksheet B: Simple Design Capture Volume Sizing Method

Step 1: Determine the design capture storm depth used for calculating volume				
1	Enter design capture storm depth from Figure III.1, *d* (inches)	d=	0.8	inches
2	Enter the effect of provided HSCs, d_{HSC} (inches) (Worksheet A)	d_{HSC}=	0	inches
3	Calculate the remainder of the design capture storm depth, $d_{remainder}$ (inches) (Line 1 – Line 2)	$d_{remainder}$=	0.8	inches
Step 2: Calculate the DCV				
1	Enter Project area tributary to BMP (s), *A* (acres)	A=	1.35	acres
2	Enter Project Imperviousness, *imp* (unitless)	imp=	1.00	
3	Calculate runoff coefficient, *C= (0.75 x imp) + 0.15*	C=	0.90	
4	Calculate runoff volume, V_{design}= *(C x* $d_{remainder}$ *x A x 43560 x (1/12))*	V_{design}=	3,528.4	cu-ft
Step 3: Design BMPs to ensure full retention of the DCV				
Step 3a: Determine design infiltration rate			**N/A**	
1	Enter measured infiltration rate, $K_{measured}$ (in/hr) (Appendix VII)	$K_{measured}$=	NA	In/hr
2	Enter combined safety factor from Worksheet H, S_{final} (unitless)	S_{final}=	NA	
3	Calculate design infiltration rate, $K_{design} = K_{measured} / S_{final}$	K_{design}=	NA	In/hr
Step 3b: Determine minimum BMP footprint				
4	Enter drawdown time, *T* (max 48 hours)	T=	NA	Hours
5	Calculate max retention depth that can be drawn down within the drawdown time (feet), $D_{max} = K_{design} \times T \times (1/12)$	D_{max}=	NA	feet
6	Calculate minimum area required for BMP (sq-ft), $A_{min} = V_{design} / d_{max}$	A_{min}=	NA	sq-ft

Worksheet B: Simple Design Capture Volume Sizing Method

Step 1: Determine the design capture storm depth used for calculating volume				
1	Enter design capture storm depth from Figure III.1, *d* (inches)	d=	0.8	inches
2	Enter the effect of provided HSCs, d_{HSC} (inches) (Worksheet A)	d_{HSC}=	0	inches
3	Calculate the remainder of the design capture storm depth, $d_{remainder}$ (inches) (Line 1 – Line 2)	$d_{remainder}$=	0.8	inches
Step 2: Calculate the DCV				
1	Enter Project area tributary to BMP (s), *A* (acres)	A=	0.99	acres
2	Enter Project Imperviousness, *imp* (unitless)	imp=	1.00	
3	Calculate runoff coefficient, *C= (0.75 x imp) + 0.15*	C=	0.90	
4	Calculate runoff volume, V_{design}= *(C x* $d_{remainder}$ *x A x 43560 x (1/12))*	V_{design}=	2,587.5	cu-ft
Step 3: Design BMPs to ensure full retention of the DCV				
Step 3a: Determine design infiltration rate			**N/A**	
1	Enter measured infiltration rate, $K_{measured}$ (in/hr) (Appendix VII)	$K_{measured}$=	NA	In/hr
2	Enter combined safety factor from Worksheet H, S_{final} (unitless)	S_{final}=	NA	
3	Calculate design infiltration rate, $K_{design} = K_{measured} / S_{final}$	K_{design}=	NA	In/hr
Step 3b: Determine minimum BMP footprint				
4	Enter drawdown time, *T* (max 48 hours)	T=	NA	Hours
5	Calculate max retention depth that can be drawn down within the drawdown time (feet), $D_{max} = K_{design} \times T \times (1/12)$	D_{max}=	NA	feet
6	Calculate minimum area required for BMP (sq-ft), $A_{min} = V_{design} / d_{max}$	A_{min}=	NA	sq-ft

Worksheet B: Simple Design Capture Volume Sizing Method

Step 1: Determine the design capture storm depth used for calculating volume				
1	Enter design capture storm depth from Figure III.1, *d* (inches)	d=	0.8	inches
2	Enter the effect of provided HSCs, d_{HSC} (inches) (Worksheet A)	d_{HSC}=	0	inches
3	Calculate the remainder of the design capture storm depth, $d_{remainder}$ (inches) (Line 1 – Line 2)	$d_{remainder}$=	0.8	inches
Step 2: Calculate the DCV				
1	Enter Project area tributary to BMP (s), *A* (acres)	A=	0.20	acres
2	Enter Project Imperviousness, *imp* (unitless)	imp=	1.00	
3	Calculate runoff coefficient, *C= (0.75 x imp) + 0.15*	C=	0.90	
4	Calculate runoff volume, V_{design}= *(C x* $d_{remainder}$ *x A x 43560 x (1/12))*	V_{design}=	522.7	cu-ft
Step 3: Design BMPs to ensure full retention of the DCV				
Step 3a: Determine design infiltration rate			**N/A**	
1	Enter measured infiltration rate, $K_{measured}$ (in/hr) (Appendix VII)	$K_{measured}$=	NA	In/hr
2	Enter combined safety factor from Worksheet H, S_{final} (unitless)	S_{final}=	NA	
3	Calculate design infiltration rate, $K_{design} = K_{measured} / S_{final}$	K_{design}=	NA	In/hr
Step 3b: Determine minimum BMP footprint				
4	Enter drawdown time, *T* (max 48 hours)	T=	NA	Hours
5	Calculate max retention depth that can be drawn down within the drawdown time (feet), $D_{max} = K_{design} \times T \times (1/12)$	D_{max}=	NA	feet
6	Calculate minimum area required for BMP (sq-ft), $A_{min} = V_{design} / d_{max}$	A_{min}=	NA	sq-ft

DMA A

Worksheet D: Capture Efficiency Method for Flow-Based BMPs

Step 1: Determine the design capture storm depth used for calculating volume				
1	Enter the time of concentration, T_c (min) (See Appendix IV.2)	T_c=	5.00	
2	Using Figure III.4, determine the design intensity at which the estimated time of concentration (T_c) achieves 80% capture efficiency, I_1	I_1=	0.26	in/hr
3	Enter the effect depth of provided HSCs upstream, d_{HSC} (inches) (Worksheet A)	d_{HSC}=	0	inches
4	Enter capture efficiency corresponding to d_{HSC}, Y_2 (Worksheet A)	Y_2=	0	%
5	Using Figure III.4, determine the design intensity at which the time of concentration (T_c) achieves the upstream capture efficiency(Y_2), I_2	I_2=	0	in/hr
6	Determine the design intensity that must be provided by BMP, $I_{design} = I_1 - I_2$	I_{design}=	0.26	in/hr
Step 2: Calculate the design flowrate				
1	Enter Project area tributary to BMP (s), *A* (acres)	A=	1.35	acres
2	Enter Project Imperviousness, *imp* (unitless)	imp=	1.00 *	
3	Calculate runoff coefficient, $C = (0.75 \times imp) + 0.15$	C=	0.90	
4	Calculate design flowrate, $Q_{design} = (C \times i_{design} \times A)$	Q_{design}=	0.316	cfs

Supporting Calculations

Describe system:
Surface runoff will be conveyed through the private street to proposed curb inlet catch basins equipped with a Dvert System that diverts flows to proposed Biofiltration Vault for water quality treatment.

*Assumed 100% impervious coverage utilized for preliminary calculations. Actual impervious coverage will be calculated in final engineering.

Provide time of concentration assumptions:
The time of concentration was assumed to be 5 minutes for conservative purposes.

Worksheet D: Capture Efficiency Method for Flow-Based BMPs

Step 1: Determine the design capture storm depth used for calculating volume				
1	Enter the time of concentration, T_c (min) (See Appendix IV.2)	T_c=	5.00	
2	Using Figure III.4, determine the design intensity at which the estimated time of concentration (T_c) achieves 80% capture efficiency, I_1	I_1=	0.26	in/hr
3	Enter the effect depth of provided HSCs upstream, d_{HSC} (inches) (Worksheet A)	d_{HSC}=	0	inches
4	Enter capture efficiency corresponding to d_{HSC}, Y_2 (Worksheet A)	Y_2=	0	%
5	Using Figure III.4, determine the design intensity at which the time of concentration (T_c) achieves the upstream capture efficiency(Y_2), I_2	I_2=	0	in/hr
6	Determine the design intensity that must be provided by BMP, $I_{design}= I_1-I_2$	I_{design}=	0.26	in/hr
Step 2: Calculate the design flowrate				
1	Enter Project area tributary to BMP (s), *A* (acres)	A=	0.99	acres
2	Enter Project Imperviousness, *imp* (unitless)	imp=	1.00 *	
3	Calculate runoff coefficient, $C= (0.75 \times imp) + 0.15$	C=	0.90	
4	Calculate design flowrate, $Q_{design}= (C \times i_{design} \times A)$	Q_{design}=	0.232	cfs

Supporting Calculations

Describe system:
Surface runoff will be conveyed through the private street to proposed curb inlet catch basins equipped with a Dvert System that diverts flows to proposed Biofiltration Vault for water quality treatment.

*Assumed 100% impervious coverage utilized for preliminary calculations. Actual impervious coverage will be calculated in final engineering.

Provide time of concentration assumptions:
The time of concentration was assumed to be 5 minutes for conservative purposes.

Worksheet D: Capture Efficiency Method for Flow-Based BMPs

Step 1: Determine the design capture storm depth used for calculating volume				
1	Enter the time of concentration, T_c (min) (See Appendix IV.2)	T_c=	5.00	
2	Using Figure III.4, determine the design intensity at which the estimated time of concentration (T_c) achieves 80% capture efficiency, I_1	I_1=	0.26	in/hr
3	Enter the effect depth of provided HSCs upstream, d_{HSC} (inches) (Worksheet A)	d_{HSC}=	0	inches
4	Enter capture efficiency corresponding to d_{HSC}, Y_2 (Worksheet A)	Y_2=	0	%
5	Using Figure III.4, determine the design intensity at which the time of concentration (T_c) achieves the upstream capture efficiency(Y_2), I_2	I_2=	0	in/hr
6	Determine the design intensity that must be provided by BMP, $I_{design} = I_1 - I_2$	I_{design}=	0.26	in/hr
Step 2: Calculate the design flowrate				
1	Enter Project area tributary to BMP (s), *A* (acres)	A=	0.20	acres
2	Enter Project Imperviousness, *imp* (unitless)	imp=	1.00 *	
3	Calculate runoff coefficient, $C = (0.75 \times imp) + 0.15$	C=	0.90	
4	Calculate design flowrate, $Q_{design} = (C \times i_{design} \times A)$	Q_{design}=	0.047	cfs

Supporting Calculations

Describe system:
Surface runoff will be conveyed through the private street to proposed curb inlet catch basins equipped with a Dvert System that diverts low flows to proposed Biofiltration Vault for water quality treatment.

*Assumed 100% impervious coverage utilized for preliminary calculations. Actual impervious coverage will be calculated in final engineering.

Provide time of concentration assumptions:
The time of concentration was assumed to be 5 minutes for conservative purposes.

Worksheet D: Capture Efficiency Method for Flow-Based BMPs

Graphical Operations

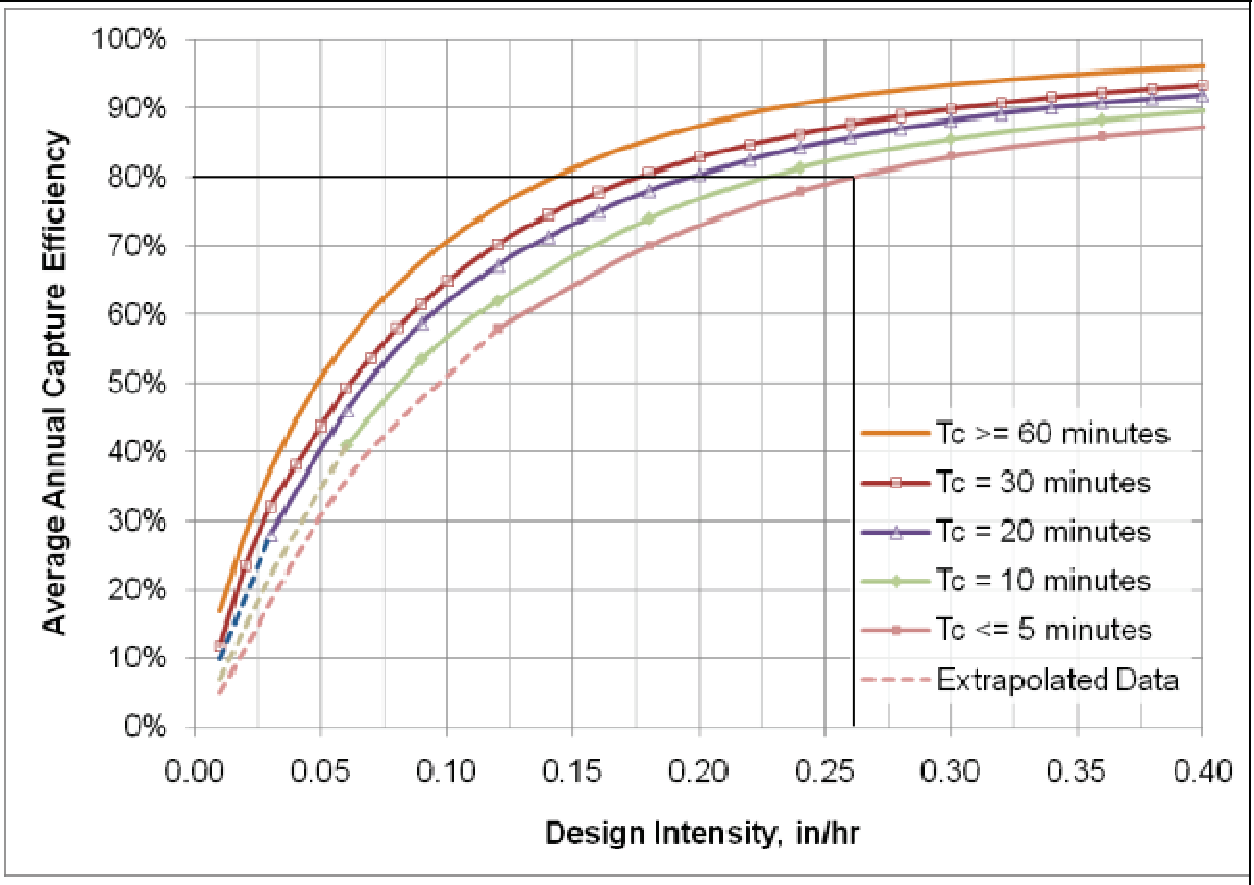

Provide supporting graphical operations. See Example III.7.

Worksheet H: Factor of Safety and Design Infiltration Rate Worksheet					
Whole Site					
Factor Category		Factor Description	Assigned Weight (w)	Factor Value (v)	Product (p) p = w x v
A	Suitability Assessment	Soil assessment methods	0.25	1	0.25
		Predominant soil texture	0.25	1	0.25
		Site soil variability	0.25	1	0.25
		Depth to groundwater / impervious layer	0.25	2	0.50
		Suitability Assessment Safety Factor, $S_A = \Sigma p$			1.25
B	Design	Tributary area size	0.25	2	0.50
		Level of pretreatment/ expected sediment loads	0.25	1	0.25
		Redundancy	0.25	2	0.50
		Compaction during construction	0.25	1	0.25
		Design Safety Factor, $S_B = \Sigma p$			1.5
Combined Safety Factor, $S_{TOT} = S_A \times S_B$				1.875 → use 2	
Measured Infiltration Rate, inch/hr, K_M (corrected for test-specific bias)				37.5	
Design Infiltration Rate, in/hr, $K_{DESIGN} = K_M / S_{TOT}$				18.75	

Supporting Data

Briefly describe infiltration test and provide reference to test forms:

Per the Geotechnical Engineering Investigation prepared by NorCal Engineering, dated January 8, 2025, the site's geotechnical infiltration properties are described as the following:

"Infiltration tests were performed in accordance with the Orange County Technical Guidance Document (OCTGD) Appendix VII - Infiltration Rate Evaluation Protocol and Factor of Safety Recommendations dated December 20, 2013.

A truck mounted Simco 2800 Drill Rig equipped with a hollow stem auger was used to excavate the exploratory borings to depths of 3 and 5 below existing ground surface. The borings consisted of six-inch diameter test holes. A three-inch diameter perforated PVC casing with solid end cap was installed in the borings and then surrounded with gravel materials to prevent caving. The infiltration holes were carefully filled with clean water and refilled after two initial readings.

Based upon the initial rates of infiltration at each location, test measurements were measured at selected maximum intervals thereafter. Measurements were obtained by using an electronic tape measure with 1 /16-inch divisions and timed with a stopwatch.

The subsurface soils exhibit the following field infiltration rates which do not include a factor of safety. The drainage disposal system shall also incorporate the safety factor required by the county standard. Calculations are based using the Porchet Method (aka Inverse Borehole Method) and are provided in Appendix D.

Boring/ Test No.	Depth	Soil Classification	Field Infiltration Rate
B-1/ TH-1	5′	SAND	37.5 in/hr
B-2/ TH-2	3′	SAND	75 in/hr

Worksheet H: Factor of Safety and Design Infiltration Rate Worksheet				
Whole Site				
Factor Category	Factor Description	Assigned Weight (w)	Factor Value (v)	Product (p) p = w x v

Based upon the presence of shallow groundwater at a depth of 9 and 10 feet below ground surface, the infiltration of stormwater into the subsurface soils is deemed not feasible. In addition, the site was calculated with moderate to high liquefaction potential. It is recommended that an alternate means of storing and disposing of stormwater be evaluated by the project civil engineer. All systems must meet the latest city and/or county specifications and the California Regional Water Quality Control Board (CRWQCB) requirements.

It is recommended that foundations shall be setback a minimum distance of 10 feet from the drainage disposal system and the bottom of footing shall be a minimum of 10 feet from the expected zone of saturation. The boundary of the zone of saturation may be assumed to project downward from the top of the permeable portion of the disposal system at an inclination of 1 to 1 or flatter, as determined by the geotechnical engineer. “

Refer to Attachment F of this Preliminary WQMP for the Geotechnical Investigation, dated January 8, 2025.

Worksheet I: Summary of Groundwater-related Feasibility Criteria

1	Is project large or small? (as defined by Table VIII.2) circle one	Large	**Small**	
2	What is the tributary area to the BMP?	A	2.54	acres
3	What type of BMP is proposed?	Biofiltration		
4	What is the infiltrating surface area of the proposed BMP?	A_{BMP}	0	sq-ft
5	What land use activities are present in the tributary area (list all) Multi-Family Residential			
6	What land use-based risk category is applicable?	L	**M**	H
7	If M or H, what pretreatment and source isolation BMPs have been considered and are proposed (describe all): Proposed MWS System Biofiltration Vaults will provide treatment for the required design flow rate.			
8	What minimum separation to mounded seasonally high groundwater applies to the proposed BMP? See Section VIII.2 (circle one)	5 ft	**10 ft**	
9	Provide rationale for selection of applicable minimum separation to seasonally high mounded groundwater: Per the TGD Section VIII.2, the following applies to a subsurface infiltration gallery: "Separation to mounded seasonally high groundwater shall be at least 10 feet for infiltration devices that inject water below the subsurface and surface infiltration BMPs with tributary area and land use activities that are considered to pose a more significant risk to groundwater quality."			
10	What is separation from the infiltrating surface to seasonally high groundwater?	SHGWT	5	ft
11	What is separation from the infiltrating surface to mounded seasonally high groundwater?	Mounded SHGWT	n/a	ft
12	Describe assumptions and methods used for mounding analysis: Groundwater was encountered at 10 feet below existing grade			
13	Is the site within a plume protection boundary (See Figure	Y	**N**	N/A

Worksheet I: Summary of Groundwater-related Feasibility Criteria

	VIII.2)?	
14	Is the site within a selenium source area or other natural plume area (See Figure VIII.2)?	Y **N** N/A
15	Is the site within 250 feet of a contaminated site?	Y **N** N/A
16	If site-specific study has been prepared, provide citation and briefly summarize relevant findings: n/a	
17	Is the site within 100 feet of a water supply well, spring, septic system?	Y **N** N/A
18	Is infiltration feasible on the site relative to groundwater-related criteria?	Y **N**
Provide rationale for feasibility determination: The site is within the shallow groundwater boundary per North Orange County Mapped Shallow Groundwater Figure XVI-2e		

Note: if a single criterion or group of criteria would render infiltration infeasible, it is not necessary to evaluate every question in this worksheet.

Worksheet J: Summary of Harvested Water Demand and Feasibility **Entire Site**

1	What demands for harvested water exist in the tributary area (check all that apply):			
2	Toilet and urinal flushing		□	
3	Landscape irrigation		✓	
4	Other:_____		□	
5	What is the design capture storm depth? (Figure III.1)	d	0.8	inches
6	What is the project size?	A	2.54	ac
7	What is the acreage of impervious area?	* IA	2.159	ac
	For projects with multiple types of demand (toilet flushing, irrigation demand, and/or other demand)			
8	What is the minimum use required for partial capture? (Table X.6)			gpd
9	What is the project estimated wet season total daily use (Section X.2)?			gpd
10	Is partial capture potentially feasible? (Line 9 > Line 8?)			
	For projects with only toilet flushing demand			
11	What is the minimum TUTIA for partial capture? (Table X.7)			
12	What is the project estimated TUTIA?			
13	Is partial capture potentially feasible? (Line 12 > Line 11?)			
	For projects with only irrigation demand			
14	What is the minimum irrigation area required based on conservation landscape design? (Table X.8) [0.84x1.74]	1.81		ac
15	What is the proposed project irrigated area? (multiply conservation landscaping by 1; multiply active turf by 2)	1.81		ac
16	Is partial capture potentially feasible? (Line 15 > Line 14?)	No		

Provide supporting assumptions and citations for controlling demand calculation:
Due to the proposed development type, density and amount of available landscaping, Harvest and Use BMPs for irrigation purposes will not be feasible.

* For preliminary purposes, an assumed 85% impervious coverage based on development type was utilized for these calculations.

Attachment B : Preliminary WQMP Exhibit

WQMP EXHIBIT

4320 WEST FIRST STREET AND 201 S. MOUNTAIN VIEW STREET
CITY OF SANTA ANA, COUNTY OF ORANGE
STATE OF CALIFORNIA

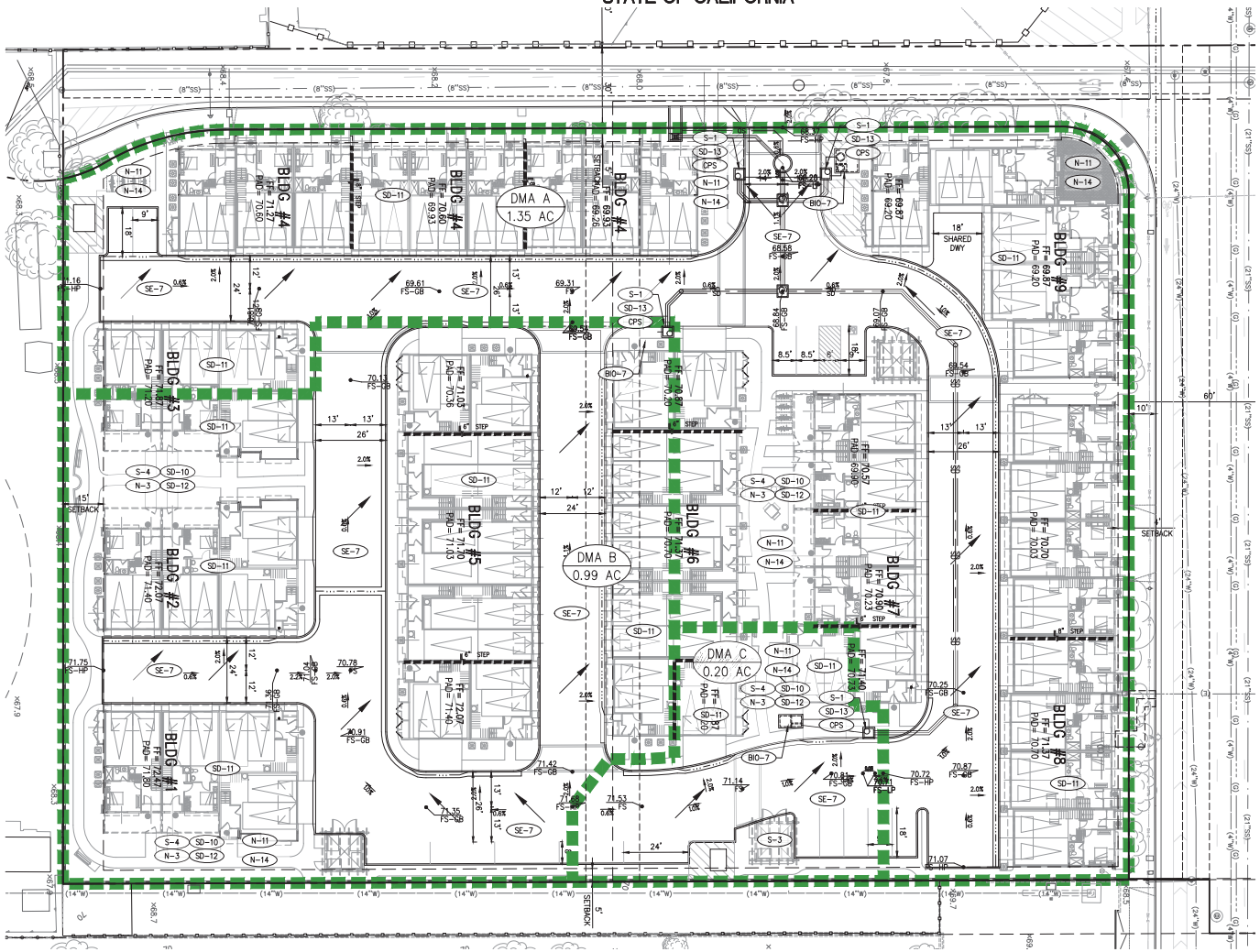

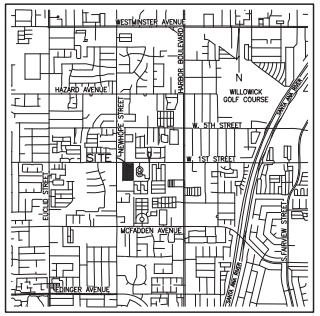

VICINITY MAP
N.T.S.

LEGEND:

- DRAINAGE MANAGEMENT AREA (DMA) BOUNDARY
- SITE BOUNDARY
- PROP RIGHT OF WAY
- EXISTING RIGHT OF WAY
- EXISTING LOT LINE
- EXISTING EASEMENT LINE
- SURFACE FLOW DIRECTION
- PIPE SLOPE DIRECTION

BEST MANAGEMENT PRACTICES

S-1	STORM DRAIN SIGNAGE AND STENCILING
S-3	TRASH STORAGE AREAS
S-4	USE EFFICIENT IRRIGATION SYSTEMS & LANDSCAPE DESIGN, WATER CONSERVATION, SMART CONTROLLERS, AND SOURCE CONTROL
SE-7	STREET SWEEPING AND VACUUMING
N-3	COMMON AREA LANDSCAPE MANAGEMENT
N-4	BMP MAINTENANCE (WHOLE SITE)
N-11	COMMON AREA LITTER CONTROL
N-14	COMMON AREA CATCH BASIN INSPECTION
SD-10	SITE DESIGN & LANDSCAPE PLANNING
SD-11	ROOF RUNOFF CONTROLS
SD-12	EFFICIENT IRRIGATION
SD-13	STORM DRAIN SIGNAGE
BIO-7	MODULAR WETLANDS SYSTEM (MWS), BIOFILTRATION VAULT (SEE PROJECT WQMP FOR ADDITIONAL DETAILS)
CPS	CONNECTOR PIPE SCREEN (CPS) DEVICE

INFILTRATION FEASIBILITY CONSTRAINTS

- LIQUEFACTION MAKES INFILTRATION INFEASIBLE

1" = 20'
0 10 20 40

PLANS PREPARED BY:
CSW/ST2 CONSULTING, INC.
CIVIL ENGINEERING
LAND PLANNING SURVEYING

WQMP EXHIBIT
4320 W FIRST STREET AND 201 S. MOUNTAIN VIEW STREET
SANTA ANA, CA

PUBLIC WORKS AGENCY
CITY OF SANTA ANA

SHEET 1 OF 1

Attachment C : Site BMPs

Site Design & Landscape Planning SD-10

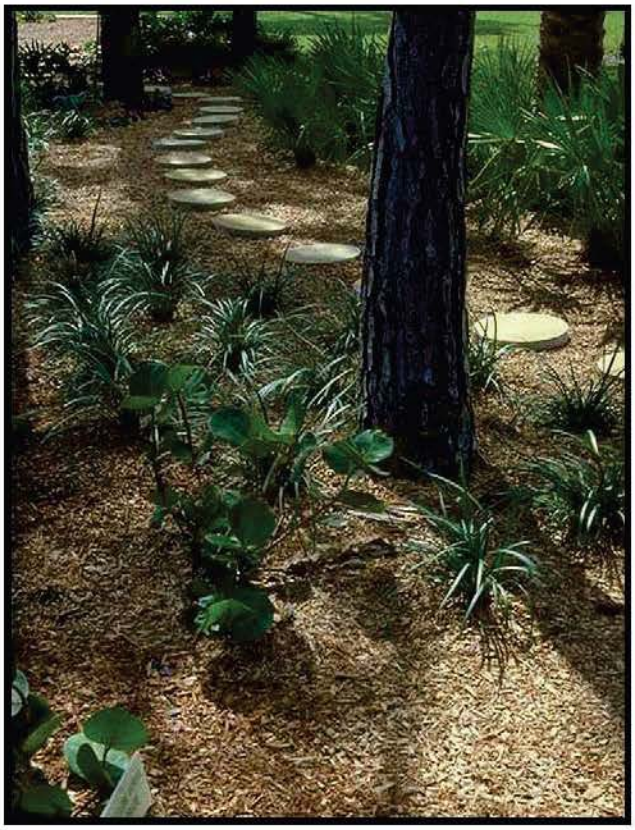

Design Objectives

- ☑ Maximize Infiltration
- ☑ Provide Retention
- ☑ Slow Runoff
- ☑ Minimize Impervious Land Coverage
- Prohibit Dumping of Improper Materials
- Contain Pollutants
- Collect and Convey

Description

Each project site possesses unique topographic, hydrologic, and vegetative features, some of which are more suitable for development than others. Integrating and incorporating appropriate landscape planning methodologies into the project design is the most effective action that can be done to minimize surface and groundwater contamination from stormwater.

Approach

Landscape planning should couple consideration of land suitability for urban uses with consideration of community goals and projected growth. Project plan designs should conserve natural areas to the extent possible, maximize natural water storage and infiltration opportunities, and protect slopes and channels.

Suitable Applications

Appropriate applications include residential, commercial and industrial areas planned for development or redevelopment.

Design Considerations

Design requirements for site design and landscapes planning should conform to applicable standards and specifications of agencies with jurisdiction and be consistent with applicable General Plan and Local Area Plan policies.

CASQA
CALIFORNIA STORMWATER QUALITY ASSOCIATION

Designing New Installations

Begin the development of a plan for the landscape unit with attention to the following general principles:

- Formulate the plan on the basis of clearly articulated community goals. Carefully identify conflicts and choices between retaining and protecting desired resources and community growth.

- Map and assess land suitability for urban uses. Include the following landscape features in the assessment: wooded land, open unwooded land, steep slopes, erosion-prone soils, foundation suitability, soil suitability for waste disposal, aquifers, aquifer recharge areas, wetlands, floodplains, surface waters, agricultural lands, and various categories of urban land use. When appropriate, the assessment can highlight outstanding local or regional resources that the community determines should be protected (e.g., a scenic area, recreational area, threatened species habitat, farmland, fish run). Mapping and assessment should recognize not only these resources but also additional areas needed for their sustenance.

Project plan designs should conserve natural areas to the extent possible, maximize natural water storage and infiltration opportunities, and protect slopes and channels.

Conserve Natural Areas during Landscape Planning

If applicable, the following items are required and must be implemented in the site layout during the subdivision design and approval process, consistent with applicable General Plan and Local Area Plan policies:

- Cluster development on least-sensitive portions of a site while leaving the remaining land in a natural undisturbed condition.

- Limit clearing and grading of native vegetation at a site to the minimum amount needed to build lots, allow access, and provide fire protection.

- Maximize trees and other vegetation at each site by planting additional vegetation, clustering tree areas, and promoting the use of native and/or drought tolerant plants.

- Promote natural vegetation by using parking lot islands and other landscaped areas.

- Preserve riparian areas and wetlands.

Maximize Natural Water Storage and Infiltration Opportunities Within the Landscape Unit

- Promote the conservation of forest cover. Building on land that is already deforested affects basin hydrology to a lesser extent than converting forested land. Loss of forest cover reduces interception storage, detention in the organic forest floor layer, and water losses by evapotranspiration, resulting in large peak runoff increases and either their negative effects or the expense of countering them with structural solutions.

- Maintain natural storage reservoirs and drainage corridors, including depressions, areas of permeable soils, swales, and intermittent streams. Develop and implement policies and

regulations to discourage the clearing, filling, and channelization of these features. Utilize them in drainage networks in preference to pipes, culverts, and engineered ditches.

- Evaluating infiltration opportunities by referring to the stormwater management manual for the jurisdiction and pay particular attention to the selection criteria for avoiding groundwater contamination, poor soils, and hydrogeological conditions that cause these facilities to fail. If necessary, locate developments with large amounts of impervious surfaces or a potential to produce relatively contaminated runoff away from groundwater recharge areas.

Protection of Slopes and Channels during Landscape Design

- Convey runoff safely from the tops of slopes.
- Avoid disturbing steep or unstable slopes.
- Avoid disturbing natural channels.
- Stabilize disturbed slopes as quickly as possible.
- Vegetate slopes with native or drought tolerant vegetation.
- Control and treat flows in landscaping and/or other controls prior to reaching existing natural drainage systems.
- Stabilize temporary and permanent channel crossings as quickly as possible, and ensure that increases in run-off velocity and frequency caused by the project do not erode the channel.
- Install energy dissipaters, such as riprap, at the outlets of new storm drains, culverts, conduits, or channels that enter unlined channels in accordance with applicable specifications to minimize erosion. Energy dissipaters shall be installed in such a way as to minimize impacts to receiving waters.
- Line on-site conveyance channels where appropriate, to reduce erosion caused by increased flow velocity due to increases in tributary impervious area. The first choice for linings should be grass or some other vegetative surface, since these materials not only reduce runoff velocities, but also provide water quality benefits from filtration and infiltration. If velocities in the channel are high enough to erode grass or other vegetative linings, riprap, concrete, soil cement, or geo-grid stabilization are other alternatives.
- Consider other design principles that are comparable and equally effective.

Redeveloping Existing Installations

Various jurisdictional stormwater management and mitigation plans (SUSMP, WQMP, etc.) define "redevelopment" in terms of amounts of additional impervious area, increases in gross floor area and/or exterior construction, and land disturbing activities with structural or impervious surfaces. The definition of " redevelopment" must be consulted to determine whether or not the requirements for new development apply to areas intended for redevelopment. If the definition applies, the steps outlined under "designing new installations" above should be followed.

Redevelopment may present significant opportunity to add features which had not previously been implemented. Examples include incorporation of depressions, areas of permeable soils, and swales in newly redeveloped areas. While some site constraints may exist due to the status of already existing infrastructure, opportunities should not be missed to maximize infiltration, slow runoff, reduce impervious areas, disconnect directly connected impervious areas.

Other Resources

A Manual for the Standard Urban Stormwater Mitigation Plan (SUSMP), Los Angeles County Department of Public Works, May 2002.

Stormwater Management Manual for Western Washington, Washington State Department of Ecology, August 2001.

Model Standard Urban Storm Water Mitigation Plan (SUSMP) for San Diego County, Port of San Diego, and Cities in San Diego County, February 14, 2002.

Model Water Quality Management Plan (WQMP) for County of Orange, Orange County Flood Control District, and the Incorporated Cities of Orange County, Draft February 2003.

Ventura Countywide Technical Guidance Manual for Stormwater Quality Control Measures, July 2002.

Roof Runoff Controls SD-11



Rain Garden

Design Objectives

- ☑ Maximize Infiltration
- ☑ Provide Retention
- ☑ Slow Runoff
- Minimize Impervious Land Coverage
- Prohibit Dumping of Improper Materials
- ☑ Contain Pollutants
- Collect and Convey

Description

Various roof runoff controls are available to address stormwater that drains off rooftops. The objective is to reduce the total volume and rate of runoff from individual lots, and retain the pollutants on site that may be picked up from roofing materials and atmospheric deposition. Roof runoff controls consist of directing the roof runoff away from paved areas and mitigating flow to the storm drain system through one of several general approaches: cisterns or rain barrels; dry wells or infiltration trenches; pop-up emitters, and foundation planting. The first three approaches require the roof runoff to be contained in a gutter and downspout system. Foundation planting provides a vegetated strip under the drip line of the roof.

Approach

Design of individual lots for single-family homes as well as lots for higher density residential and commercial structures should consider site design provisions for containing and infiltrating roof runoff or directing roof runoff to vegetative swales or buffer areas. Retained water can be reused for watering gardens, lawns, and trees. Benefits to the environment include reduced demand for potable water used for irrigation, improved stormwater quality, increased groundwater recharge, decreased runoff volume and peak flows, and decreased flooding potential.

Suitable Applications

Appropriate applications include residential, commercial and industrial areas planned for development or redevelopment.

Design Considerations

Designing New Installations

Cisterns or Rain Barrels

One method of addressing roof runoff is to direct roof downspouts to cisterns or rain barrels. A cistern is an above ground storage vessel with either a manually operated valve or a permanently open outlet. Roof runoff is temporarily stored and then released for irrigation or infiltration between storms. The number of rain

CASQA
CALIFORNIA STORMWATER QUALITY ASSOCIATION

barrels needed is a function of the rooftop area. Some low impact developers recommend that every house have at least 2 rain barrels, with a minimum storage capacity of 1000 liters. Roof barrels serve several purposes including mitigating the first flush from the roof which has a high volume, amount of contaminants, and thermal load. Several types of rain barrels are commercially available. Consideration must be given to selecting rain barrels that are vector proof and childproof. In addition, some barrels are designed with a bypass valve that filters out grit and other contaminants and routes overflow to a soak-away pit or rain garden.

If the cistern has an operable valve, the valve can be closed to store stormwater for irrigation or infiltration between storms. This system requires continual monitoring by the resident or grounds crews, but provides greater flexibility in water storage and metering. If a cistern is provided with an operable valve and water is stored inside for long periods, the cistern must be covered to prevent mosquitoes from breeding.

A cistern system with a permanently open outlet can also provide for metering stormwater runoff. If the cistern outlet is significantly smaller than the size of the downspout inlet (say ¼ to ½ inch diameter), runoff will build up inside the cistern during storms, and will empty out slowly after peak intensities subside. This is a feasible way to mitigate the peak flow increases caused by rooftop impervious land coverage, especially for the frequent, small storms.

Dry wells and Infiltration Trenches

Roof downspouts can be directed to dry wells or infiltration trenches. A dry well is constructed by excavating a hole in the ground and filling it with an open graded aggregate, and allowing the water to fill the dry well and infiltrate after the storm event. An underground connection from the downspout conveys water into the dry well, allowing it to be stored in the voids. To minimize sedimentation from lateral soil movement, the sides and top of the stone storage matrix can be wrapped in a permeable filter fabric, though the bottom may remain open. A perforated observation pipe can be inserted vertically into the dry well to allow for inspection and maintenance.

In practice, dry wells receiving runoff from single roof downspouts have been successful over long periods because they contain very little sediment. They must be sized according to the amount of rooftop runoff received, but are typically 4 to 5 feet square, and 2 to 3 feet deep, with a minimum of 1-foot soil cover over the top (maximum depth of 10 feet).

To protect the foundation, dry wells must be set away from the building at least 10 feet. They must be installed in solids that accommodate infiltration. In poorly drained soils, dry wells have very limited feasibility.

Infiltration trenches function in a similar manner and would be particularly effective for larger roof areas. An infiltration trench is a long, narrow, rock-filled trench with no outlet that receives stormwater runoff. These are described under Treatment Controls.

Pop-up Drainage Emitter

Roof downspouts can be directed to an underground pipe that daylights some distance from the building foundation, releasing the roof runoff through a pop-up emitter. Similar to a pop-up irrigation head, the emitter only opens when there is flow from the roof. The emitter remains flush to the ground during dry periods, for ease of lawn or landscape maintenance.

Foundation Planting

Landscape planting can be provided around the base to allow increased opportunities for stormwater infiltration and protect the soil from erosion caused by concentrated sheet flow coming off the roof. Foundation plantings can reduce the physical impact of water on the soil and provide a subsurface matrix of roots that encourage infiltration. These plantings must be sturdy enough to tolerate the heavy runoff sheet flows, and periodic soil saturation.

Redeveloping Existing Installations

Various jurisdictional stormwater management and mitigation plans (SUSMP, WQMP, etc.) define "redevelopment" in terms of amounts of additional impervious area, increases in gross floor area and/or exterior construction, and land disturbing activities with structural or impervious surfaces. The definition of " redevelopment" must be consulted to determine whether or not the requirements for new development apply to areas intended for redevelopment. If the definition applies, the steps outlined under "designing new installations" above should be followed.

Supplemental Information

Examples

- City of Ottawa's Water Links Surface –Water Quality Protection Program
- City of Toronto Downspout Disconnection Program
- City of Boston, MA, Rain Barrel Demonstration Program

Other Resources

Hager, Marty Catherine, Stormwater, "Low-Impact Development", January/February 2003. www.stormh2o.com

Low Impact Urban Design Tools, Low Impact Development Design Center, Beltsville, MD. www.lid-stormwater.net

Start at the Source, Bay Area Stormwater Management Agencies Association, 1999 Edition

Efficient Irrigation SD-12



Design Objectives

- ☑ Maximize Infiltration
- ☑ Provide Retention
- ☑ Slow Runoff
- Minimize Impervious Land Coverage
- Prohibit Dumping of Improper Materials
- Contain Pollutants
- Collect and Convey

Description

Irrigation water provided to landscaped areas may result in excess irrigation water being conveyed into stormwater drainage systems.

Approach

Project plan designs for development and redevelopment should include application methods of irrigation water that minimize runoff of excess irrigation water into the stormwater conveyance system.

Suitable Applications

Appropriate applications include residential, commercial and industrial areas planned for development or redevelopment. (Detached residential single-family homes are typically excluded from this requirement.)

Design Considerations

Designing New Installations

The following methods to reduce excessive irrigation runoff should be considered, and incorporated and implemented where determined applicable and feasible by the Permittee:

- Employ rain-triggered shutoff devices to prevent irrigation after precipitation.
- Design irrigation systems to each landscape area's specific water requirements.
- Include design featuring flow reducers or shutoff valves triggered by a pressure drop to control water loss in the event of broken sprinkler heads or lines.
- Implement landscape plans consistent with County or City water conservation resolutions, which may include provision of water sensors, programmable irrigation times (for short cycles), etc.

CASQA
CALIFORNIA STORMWATER QUALITY ASSOCIATION

- Design timing and application methods of irrigation water to minimize the runoff of excess irrigation water into the storm water drainage system.
- Group plants with similar water requirements in order to reduce excess irrigation runoff and promote surface filtration. Choose plants with low irrigation requirements (for example, native or drought tolerant species). Consider design features such as:
  - Using mulches (such as wood chips or bar) in planter areas without ground cover to minimize sediment in runoff
  - Installing appropriate plant materials for the location, in accordance with amount of sunlight and climate, and use native plant materials where possible and/or as recommended by the landscape architect
  - Leaving a vegetative barrier along the property boundary and interior watercourses, to act as a pollutant filter, where appropriate and feasible
  - Choosing plants that minimize or eliminate the use of fertilizer or pesticides to sustain growth
- Employ other comparable, equally effective methods to reduce irrigation water runoff.

Redeveloping Existing Installations

Various jurisdictional stormwater management and mitigation plans (SUSMP, WQMP, etc.) define "redevelopment" in terms of amounts of additional impervious area, increases in gross floor area and/or exterior construction, and land disturbing activities with structural or impervious surfaces. The definition of " redevelopment" must be consulted to determine whether or not the requirements for new development apply to areas intended for redevelopment. If the definition applies, the steps outlined under "designing new installations" above should be followed.

Other Resources

A Manual for the Standard Urban Stormwater Mitigation Plan (SUSMP), Los Angeles County Department of Public Works, May 2002.

Model Standard Urban Storm Water Mitigation Plan (SUSMP) for San Diego County, Port of San Diego, and Cities in San Diego County, February 14, 2002.

Model Water Quality Management Plan (WQMP) for County of Orange, Orange County Flood Control District, and the Incorporated Cities of Orange County, Draft February 2003.

Ventura Countywide Technical Guidance Manual for Stormwater Quality Control Measures, July 2002.

Storm Drain Signage SD-13



Design Objectives

- Maximize Infiltration
- Provide Retention
- Slow Runoff
- Minimize Impervious Land Coverage
- ☑ Prohibit Dumping of Improper Materials
- Contain Pollutants
- Collect and Convey

Description

Waste materials dumped into storm drain inlets can have severe impacts on receiving and ground waters. Posting notices regarding discharge prohibitions at storm drain inlets can prevent waste dumping. Storm drain signs and stencils are highly visible source controls that are typically placed directly adjacent to storm drain inlets.

Approach

The stencil or affixed sign contains a brief statement that prohibits dumping of improper materials into the urban runoff conveyance system. Storm drain messages have become a popular method of alerting the public about the effects of and the prohibitions against waste disposal.

Suitable Applications

Stencils and signs alert the public to the destination of pollutants discharged to the storm drain. Signs are appropriate in residential, commercial, and industrial areas, as well as any other area where contributions or dumping to storm drains is likely.

Design Considerations

Storm drain message markers or placards are recommended at all storm drain inlets within the boundary of a development project. The marker should be placed in clear sight facing toward anyone approaching the inlet from either side. All storm drain inlet locations should be identified on the development site map.

Designing New Installations

The following methods should be considered for inclusion in the project design and show on project plans:

- Provide stenciling or labeling of all storm drain inlets and catch basins, constructed or modified, within the project area with prohibitive language. Examples include "NO DUMPING

CASQA
CALIFORNIA STORMWATER QUALITY ASSOCIATION

– DRAINS TO OCEAN" and/or other graphical icons to discourage illegal dumping.

- Post signs with prohibitive language and/or graphical icons, which prohibit illegal dumping at public access points along channels and creeks within the project area.

Note - Some local agencies have approved specific signage and/or storm drain message placards for use. Consult local agency stormwater staff to determine specific requirements for placard types and methods of application.

Redeveloping Existing Installations

Various jurisdictional stormwater management and mitigation plans (SUSMP, WQMP, etc.) define "redevelopment" in terms of amounts of additional impervious area, increases in gross floor area and/or exterior construction, and land disturbing activities with structural or impervious surfaces. If the project meets the definition of "redevelopment", then the requirements stated under " designing new installations" above should be included in all project design plans.

Additional Information

Maintenance Considerations

- Legibility of markers and signs should be maintained. If required by the agency with jurisdiction over the project, the owner/operator or homeowner's association should enter into a maintenance agreement with the agency or record a deed restriction upon the property title to maintain the legibility of placards or signs.

Placement

- Signage on top of curbs tends to weather and fade.
- Signage on face of curbs tends to be worn by contact with vehicle tires and sweeper brooms.

Supplemental Information

Examples

- Most MS4 programs have storm drain signage programs. Some MS4 programs will provide stencils, or arrange for volunteers to stencil storm drains as part of their outreach program.

Other Resources

A Manual for the Standard Urban Stormwater Mitigation Plan (SUSMP), Los Angeles County Department of Public Works, May 2002.

Model Standard Urban Storm Water Mitigation Plan (SUSMP) for San Diego County, Port of San Diego, and Cities in San Diego County, February 14, 2002.

Model Water Quality Management Plan (WQMP) for County of Orange, Orange County Flood Control District, and the Incorporated Cities of Orange County, Draft February 2003.

Ventura Countywide Technical Guidance Manual for Stormwater Quality Control Measures, July 2002.

Street Sweeping and Vacuuming SE-7



Categories

EC	Erosion Control	
SE	Sediment Control	☒
TC	Tracking Control	☑
WE	Wind Erosion Control	
NS	Non-Stormwater Management Control	
WM	Waste Management and Materials Pollution Control	

Legend:

☑ **Primary Objective**

☒ **Secondary Objective**

Targeted Constituents

Sediment	☑
Nutrients	
Trash	☑
Metals	
Bacteria	
Oil and Grease	☑
Organics	

Potential Alternatives

None

Description and Purpose

Street sweeping and vacuuming includes use of self-propelled and walk-behind equipment to remove sediment from streets and roadways, and to clean paved surfaces in preparation for final paving. Sweeping and vacuuming prevents sediment from the project site from entering storm drains or receiving waters.

Suitable Applications

Sweeping and vacuuming are suitable anywhere sediment is tracked from the project site onto public or private paved streets and roads, typically at points of egress. Sweeping and vacuuming are also applicable during preparation of paved surfaces for final paving.

Limitations

Sweeping and vacuuming may not be effective when sediment is wet or when tracked soil is caked (caked soil may need to be scraped loose).

Implementation

- Controlling the number of points where vehicles can leave the site will allow sweeping and vacuuming efforts to be focused, and perhaps save money.
- Inspect potential sediment tracking locations daily.
- Visible sediment tracking should be swept or vacuumed on a daily basis.

If User/Subscriber modifies this fact sheet in any way, the CASQA name/logo and footer below must be removed from each page and not appear on the modified version.

- Do not use kick brooms or sweeper attachments. These tend to spread the dirt rather than remove it.
- If not mixed with debris or trash, consider incorporating the removed sediment back into the project

Costs

Rental rates for self-propelled sweepers vary depending on hopper size and duration of rental. Expect rental rates from $58/hour (3 yd^3 hopper) to $88/hour (9 yd^3 hopper), plus operator costs. Hourly production rates vary with the amount of area to be swept and amount of sediment. Match the hopper size to the area and expect sediment load to minimize time spent dumping.

Inspection and Maintenance

- Inspect BMPs in accordance with General Permit requirements for the associated project type and risk level. It is recommended that at a minimum, BMPs be inspected weekly, prior to forecasted rain events, daily during extended rain events, and after the conclusion of rain events.
- When actively in use, points of ingress and egress must be inspected daily.
- When tracked or spilled sediment is observed outside the construction limits, it must be removed at least daily. More frequent removal, even continuous removal, may be required in some jurisdictions.
- Be careful not to sweep up any unknown substance or any object that may be potentially hazardous.
- Adjust brooms frequently; maximize efficiency of sweeping operations.
- After sweeping is finished, properly dispose of sweeper wastes at an approved dumpsite.

References

Stormwater Quality Handbooks - Construction Site Best Management Practices (BMPs) Manual, State of California Department of Transportation (Caltrans), November 2000.

Labor Surcharge and Equipment Rental Rates, State of California Department of Transportation (Caltrans), April 1, 2002 – March 31, 2003.

MODULAR WETLANDS™

*Advanced **Stormwater** Biofiltration*



MWS Linear



Contents

1 Introduction

2 Applications

3 Configurations

4 Advantages

5 Operation

6 Orientations | Bypass

7 Performance | Approvals

8 Sizing

9 Installation | Maintenance | Plants

The Urban Impact

For hundreds of years natural wetlands surrounding our shores have played an integral role as nature's stormwater treatment system. But as our cities grow and develop, these natural wetlands have perished under countless roads, rooftops, and parking lots.



Plant A Wetland

Without natural wetlands our cities are deprived of water purification, flood control, and land stability. Modular Wetlands and the MWS Linear re-establish nature's presence and rejuvenate water ways in urban areas.





MWS Linear

The Modular Wetland System Linear represents a pioneering breakthrough in stormwater technology as the only biofiltration system to utilize patented horizontal flow, allowing for a smaller footprint and higher treatment capacity. While most biofilters use little or no pre-treatment, the MWS Linear incorporates an advanced pre-treatment chamber that includes separation and pre-filter cartridges. In this chamber sediment and hydrocarbons are removed from runoff before it enters the biofiltration chamber, in turn reducing maintenance costs and improving performance.

Applications

The MWS Linear has been successfully used on numerous new construction and retrofit projects. The system's superior versatility makes it beneficial for a wide range of stormwater and waste water applications - treating rooftops, streetscapes, parking lots, and industrial sites.



Industrial

Many states enforce strict regulations for discharges from industrial sites. The MWS Linear has helped various sites meet difficult EPA mandated effluent limits for dissolved metals and other pollutants.



Residential

Low to high density developments can benefit from the versatile design of the MWS Linear. The system can be used in both decentralized LID design and cost-effective end-of-the-line configurations.



Streets

Street applications can be challenging due to limited space. The MWS Linear is very adaptable, and offers the smallest footprint to work around the constraints of existing utilities on retrofit projects.



Parking Lots

Parking lots are designed to maximize space and the MWS Linear's 4 ft. standard planter width allows for easy integration into parking lot islands and other landscape medians.



Commercial

Compared to bioretention systems, the MWS Linear can treat far more area in less space - meeting treatment and volume control requirements.



Mixed Use

The MWS Linear can be installed as a raised planter to treat runoff from rooftops or patios, making it perfect for sustainable "live-work" spaces.

More applications are available on our website: www.ModularWetlands.com/Applications

- Agriculture
- Reuse
- Low Impact Development
- Waste Water





Configurations

The MWS Linear is the preferred biofiltration system of Civil Engineers across the country due to its versatile design. This highly versatile system has available "pipe-in" options on most models, along with built-in curb or grated inlets for simple integration into your stormdrain design.



Curb Type

The *Curb Type* configuration accepts sheet flow through a curb opening and is commonly used along road ways and parking lots. It can be used in sump or flow by conditions. Length of curb opening varies based on model and size.

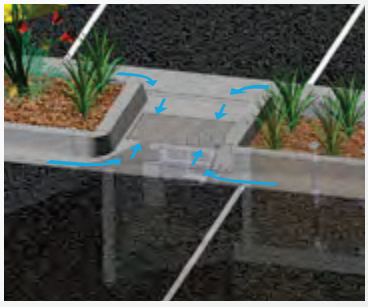

Grate Type

The *Grate Type* configuration offers the same features and benefits as the *Curb Type* but with a grated/drop inlet above the systems pre-treatment chamber. It has the added benefit of allowing for pedestrian access over the inlet. ADA compliant grates are available to assure easy and safe access. The *Grate Type* can also be used in scenarios where runoff needs to be intercepted on both sides of landscape islands.

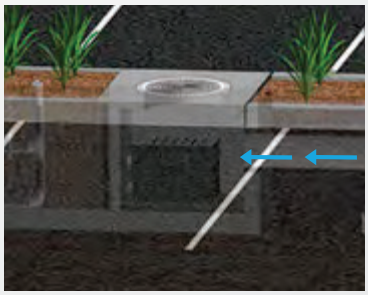

Vault Type

The system's patented horizontal flow biofilter is able to accept inflow pipes directly into the pre-treatment chamber, meaning the MWS Linear can be used in end-of-the-line installations. This greatly improves feasibility over typical decentralized designs that are required with other biofiltration/bioretention systems. Another benefit of the "pipe in" design is the ability to install the system downstream of underground detention systems to meet water quality volume requirements.

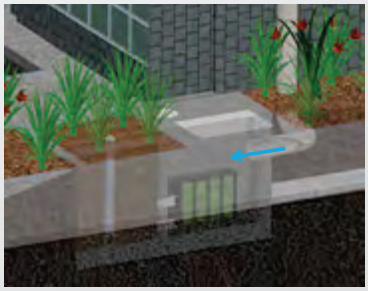

Downspout Type

The *Downspout Type* is a variation of the *Vault Type* and is designed to accept a vertical downspout pipe from roof top and podium areas. Some models have the option of utilizing an internal bypass, simplifying the overall design. The system can be installed as a raised planter and the exterior can be stuccoed or covered with other finishes to match the look of adjacent buildings.

Advantages & Operation

The MWS Linear is the most efficient and versatile biofiltration system on the market, and the only system with horizontal flow which improves performance, reduces footprint, and minimizes maintenance. Figure-1 and Figure-2 illustrate the invaluable benefits of horizontal flow and the multiple treatment stages.

Featured Advantages

- Horizontal Flow Biofiltration
- Greater Filter Surface Area
- Pre-Treatment Chamber
- Patented Perimeter Void Area
- Flow Control
- No Depressed Planter Area

1 Pre-Treatment

Separation

- Trash, sediment, and debris are separated before entering the pre-filter cartridges
- Designed for easy maintenance access

Pre-Filter Cartridges

- Over 25 ft^2 of surface area per cartridge
- Utilizes BioMediaGREEN filter material
- Removes over 80% of TSS & 90% of hydrocarbons
- Prevents pollutants that cause clogging from migrating to the biofiltration chamber

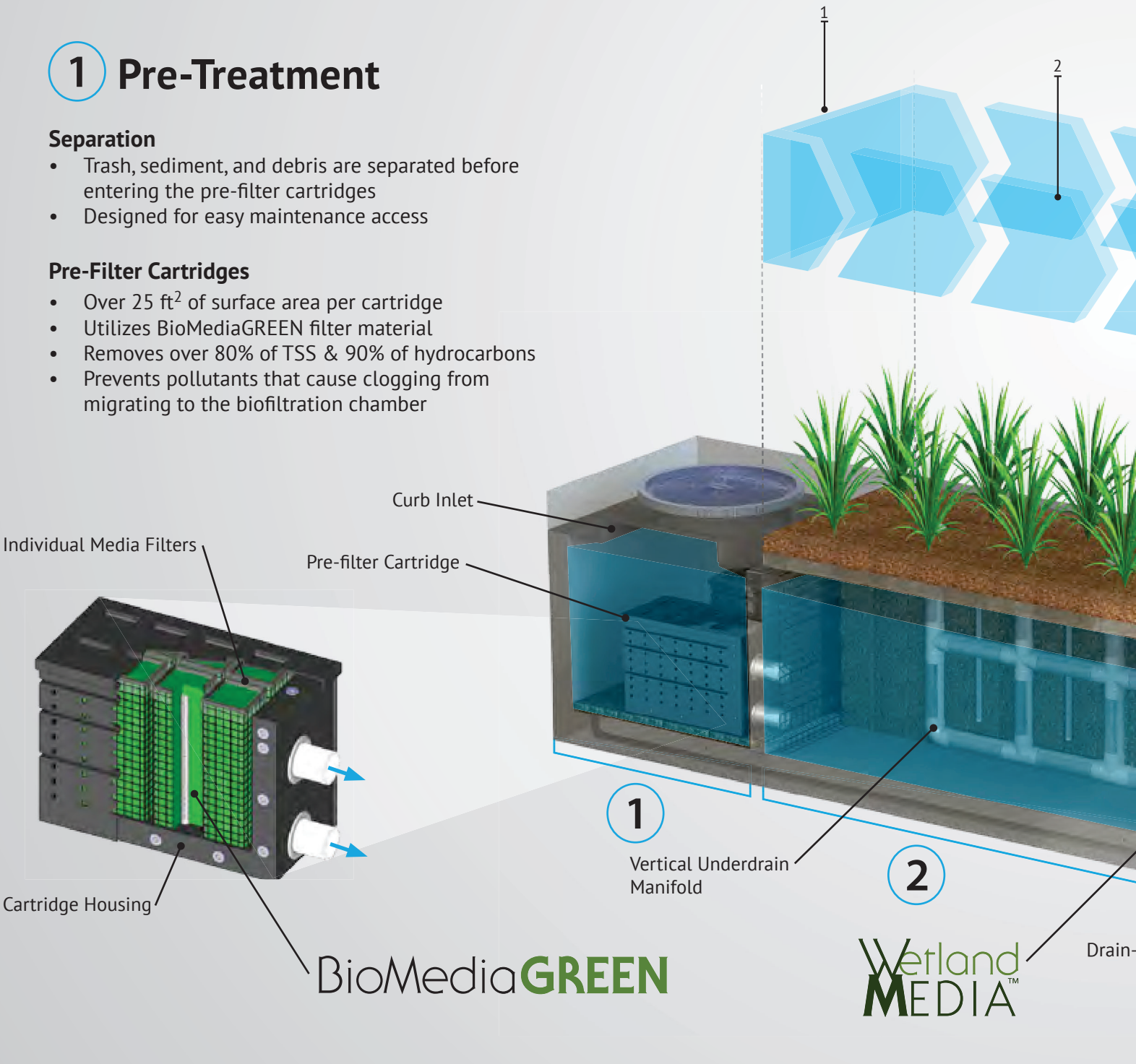

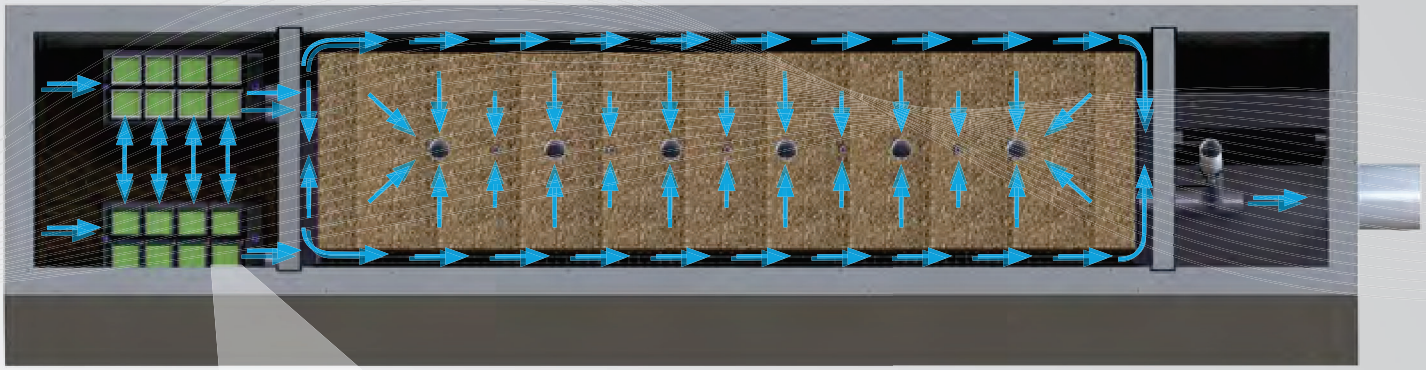

Fig. 2 - Top View

2x to 3x More Surface Area Than Traditional Downward Flow Bioretention Systems.

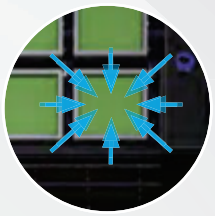

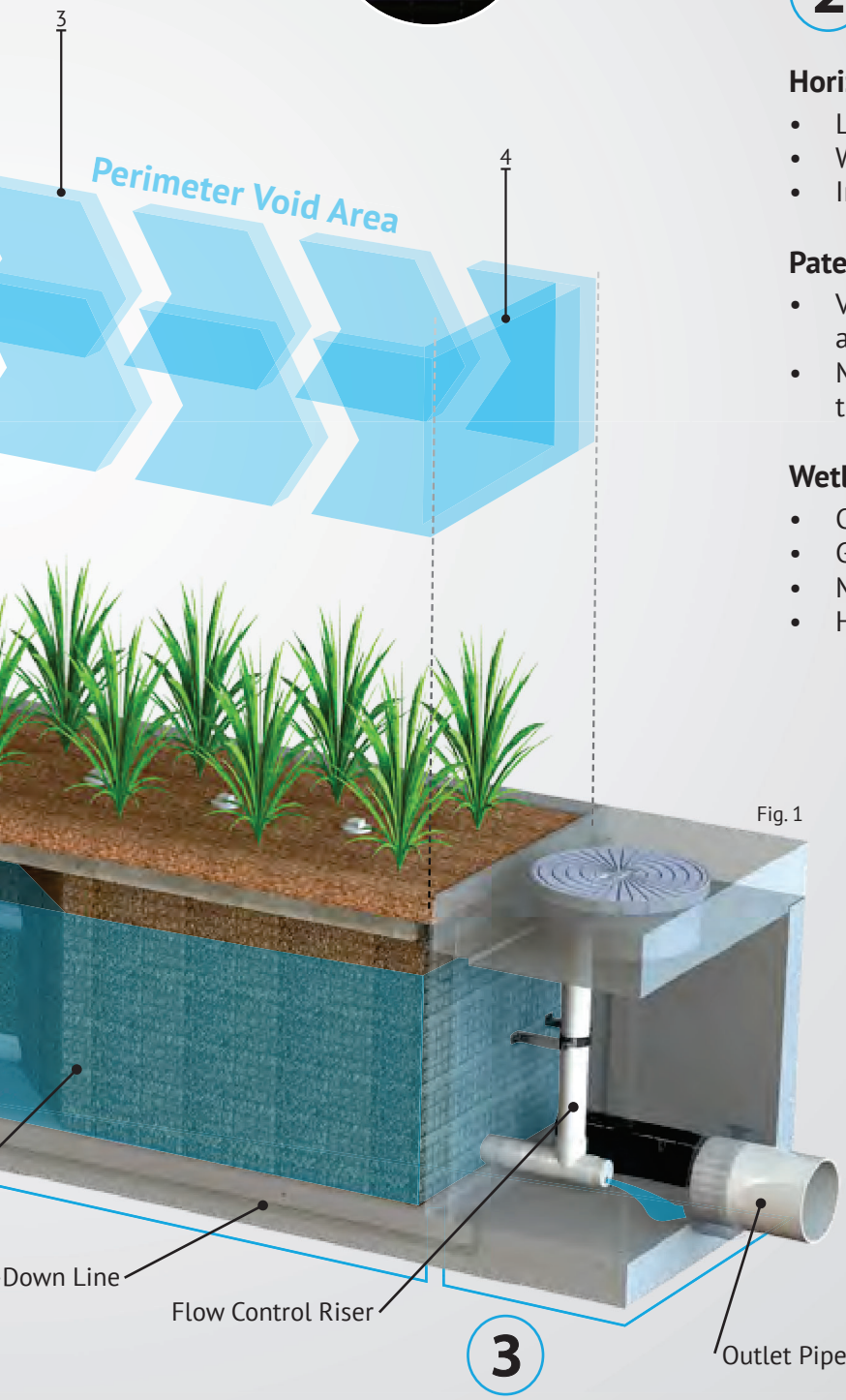

Fig. 1

2 Biofiltration

Horizontal Flow

- Less clogging than downward flow biofilters
- Water flow is subsurface
- Improves biological filtration

Patented Perimeter Void Area

- Vertically extends void area between the walls and the WetlandMEDIA on all four sides.
- Maximizes surface area of the media for higher treatment capacity

WetlandMEDIA

- Contains no organics and removes phosphorus
- Greater surface area and 48% void space
- Maximum evapotranspiration
- High ion exchange capacity and light weight

3 Discharge

Flow Control

- Orifice plate controls flow of water through WetlandMEDIA to a level lower than the media's capacity.
- Extends the life of the media and improves performance

Drain-Down Filter

- The Drain-Down is an optional feature that completely drains the pre-treatment chamber
- Water that drains from the pre-treatment chamber between storm events will be treated

Orientations



Side-By-Side

The *Side-By-Side* orientation places the pre-treatment and discharge chamber adjacent to one another with the biofiltration chamber running parallel on either side. This minimizes the system length, providing a highly compact footprint. It has been proven useful in situations such as streets with directly adjacent sidewalks, as half of the system can be placed under that sidewalk. This orientation also offers internal bypass options as discussed below.

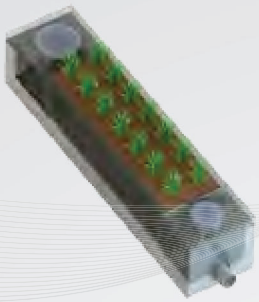

End-To-End

The *End-To-End* orientation places the pre-treatment and discharge chambers on opposite ends of the biofiltration chamber therefore minimizing the width of the system to 5 ft (outside dimension). This orientation is perfect for linear projects and street retrofits where existing utilities and sidewalks limit the amount of space available for installation. One limitation of this orientation is bypass must be external.

Bypass

Internal Bypass Weir (Side-by-Side Only)

The *Side-By-Side* orientation places the pre-treatment and discharge chambers adjacent to one another allowing for integration of internal bypass. The wall between these chambers can act as a bypass weir when flows exceed the system's treatment capacity, thus allowing bypass from the pre-treatment chamber directly to the discharge chamber.

External Diversion Weir Structure

This traditional offline diversion method can be used with the MWS Linear in scenarios where runoff is being piped to the system. These simple and effective structures are generally configured with two outflow pipes. The first is a smaller pipe on the upstream side of the diversion weir - to divert low flows over to the MWS Linear for treatment. The second is the main pipe that receives water once the system has exceeded treatment capacity and water flows over the weir.

Flow By Design

This method is one in which the system is placed just upstream of a standard curb or grate inlet to intercept the first flush. Higher flows simply pass by the MWS Linear and into the standard inlet downstream.

DVERT Low Flow Diversion

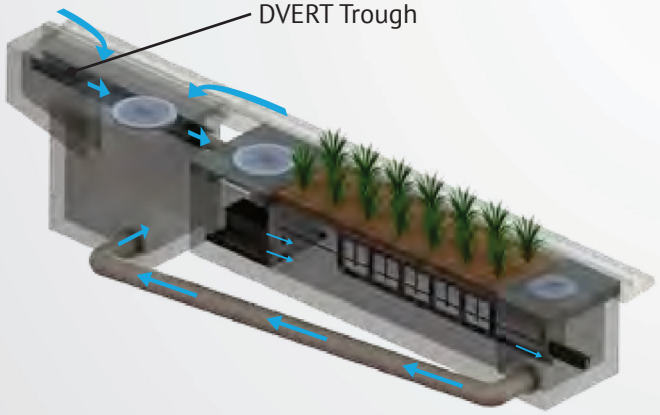

This simple yet innovative diversion trough can be installed in existing or new curb and grate inlets to divert the first flush to the MWS Linear via pipe. It works similar to a rain gutter and is installed just below the opening into the inlet. It captures the low flows and channels them over to a connecting pipe exiting out the wall of the inlet and leading to the MWS Linear. The DVERT is perfect for retrofit and green street applications that allows the MWS Linear to be installed anywhere space is available.





Performance

The MWS Linear continues to outperform other treatment methods with superior pollutant removal for TSS, heavy metals, nutrients, hydrocarbons and bacteria. Since 2007 the MWS Linear has been field tested on numerous sites across the country. With it's advanced pre-treatment chamber and innovative horizontal flow biofilter, the system is able to effectively remove pollutants through a combination of physical, chemical, and biological filtration processes. With the same biological processes found in natural wetlands, the MWS Linear harnesses natures ability to process, transform, and remove even the most harmful pollutants.

Approvals

The MWS Linear has successfully met years of challenging technical reviews and testing from some of the most prestigious and demanding agencies in the nation, and perhaps the world.



Washington State DOE Approved

The MWS Linear is approved for General Use Level Designation (GULD) for Basic, Enhanced, and Phosphorus treatment at 1 gpm/ft^2 loading rate. The highest performing BMP on the market for all main pollutant categories.

TSS	Total Phosphorus	Ortho Phosphorus	Nitrogen	Dissolved Zinc	Dissolved Copper	Total Zinc	Total Copper	Motor Oil
85%	64%	67%	45%	66%	38%	69%	50%	95%



DEQ Assignment

The Virginia Department of Environmental Quality assigned the MWS Linear, the highest phosphorus removal rating for manufactured treatment devices to meet the new Virginia Stormwater Management Program (VSMP) Technical Criteria.



MASTEP Evaluation

The University of Massachusetts at Amherst – Water Resources Research Center, issued a technical evaluation report noting removal rates up to 84% TSS, 70% Total Phosphorus, 68.5% Total Zinc, and more.



Rhode Island DEM Approved

Approved as an authorized BMP and noted to achieve the following minimum removal efficiencies: 85% TSS, 60% Pathogens, 30% Total Phosphorus for discharges to freshwater systems, and 30% Total Nitrogen for discharges to saltwater or tidal systems.

Flow Based Sizing

The MWS Linear can be used in stand alone applications to meet treatment flow requirements. Since the MWS Linear is the only biofiltration system that can accept inflow pipes several feet below the surface it can be used not only in decentralized design applications but also as a large central end-of-the-line application for maximum feasibility.



Treatment Flow Sizing Table

Model #	Dimensions	WetlandMedia Surface Area	Treatment Flow Rate (cfs)
MWS-L-4-4	4' x 4'	23 ft^2	0.052
MWS-L-4-6	4' x 6'	32 ft^2	0.073
MWS-L-4-8	4' x 8'	50 ft^2	0.115
MWS-L-4-13	4' x 13'	63 ft^2	0.144
MWS-L-4-15	4' x 15'	76 ft^2	0.175
MWS-L-4-17	4' x 17'	90 ft^2	0.206
MWS-L-4-19	4' x 19'	103 ft^2	0.237
MWS-L-4-21	4' x 21'	117 ft^2	0.268
MWS-L-8-8	8' x 8'	100 ft^2	0.230
MWS-L-8-12	8' x 12'	151 ft^2	0.346
MWS-L-8-16	8' x 16'	201 ft^2	0.462

Volume Based Sizing

Many states require treatment of a water quality volume and do not offer the option of flow based design. The MWS Linear and its unique horizontal flow makes it the only biofilter that can be used in volume based design installed downstream of ponds, detention basins, and underground storage systems.

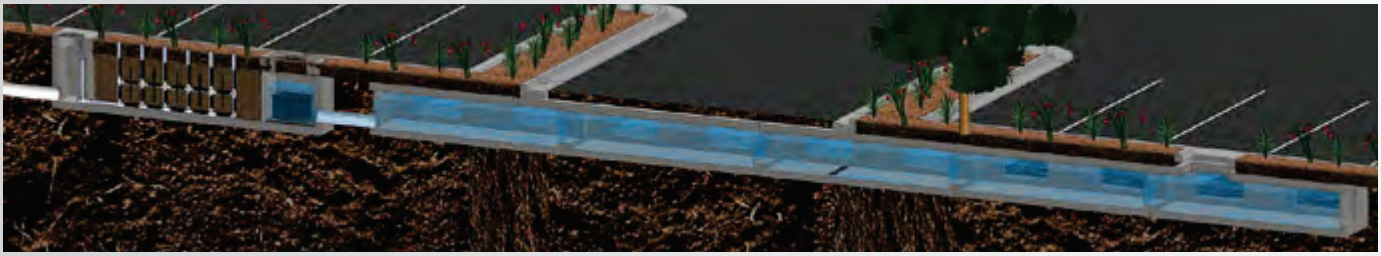

Treatment Volume Sizing Table

Model #	Treatment Capacity (cu. ft.) @ 24-Hour Drain Down	Treatment Capacity (cu. ft.) @ 48-Hour Drain Down
MWS-L-4-4	1140	2280
MWS-L-4-6	1600	3200
MWS-L-4-8	2518	5036
MWS-L-4-13	3131	6261
MWS-L-4-15	3811	7623
MWS-L-4-17	4492	8984
MWS-L-4-19	5172	10345
MWS-L-4-21	5853	11706
MWS-L-8-8	5036	10072
MWS-L-8-12	7554	15109
MWS-L-8-16	10073	20145

Installation

The MWS Linear is simple, easy to install, and has a space efficient design that offers lower excavation and installation costs compared to traditional tree-box type systems. The structure of the system resembles pre-cast catch basin or utility vaults and is installed in a similar fashion.

The system is delivered fully assembled for quick installation. Generally, the structure can be unloaded and set in place in 15 minutes. Our experienced team of field technicians are available to supervise installations and provide technical support.



Maintenance

Reduce your maintenance costs, man hours, and materials with the MWS Linear. Unlike other biofiltration systems that provide no pre-treatment, the MWS Linear is a self-contained treatment train which incorporates simple and effective pre-treatment.

Maintenance requirements for the biofilter itself are almost completely eliminated, as the pre-treatment chamber removes and isolates trash, sediments, and hydrocarbons. What's left is the simple maintenance of an easily accessible pre-treatment chamber that can be cleaned by hand or with a standard vac truck. Only periodic replacement of low-cost media in the pre-filter cartridges is required for long term operation and there is absolutely no need to replace expensive biofiltration media.



Plant Selection

Abundant plants, trees, and grasses bring value and an aesthetic benefit to any urban setting, but those in the MWS Linear do even more - they increase pollutant removal. What's not seen, but very important, is that below grade the stormwater runoff/flow is being subjected to nature's secret weapon: a dynamic physical, chemical, and biological process working to break down and remove non-point source pollutants. The flow rate is controlled in the MWS Linear, giving the plants more "contact time" so that pollutants are more successfully decomposed, volatilized and incorporated into the biomass of The MWS Linear's micro/macro flora and fauna.

A wide range of plants are suitable for use in the MWS Linear, but selections vary by location and climate. View suitable plants by selecting the list relative to your project location's hardy zone.

Please visit www.ModularWetlands.com/Plants for more information and various plant lists.



MWS Linear 2.0 HGL Sizing Calculations

MWS MODEL SIZE	WETLAND PERMITER LENGTH	LOADING RATE GPM/SF	HGL HEIGHT																												
			SHALLOW MODELS																				STANDARD HEIGHT MODEL	HIGH CAPACITY MODELS								
			1.4	1.5	1.6	1.7	1.8	1.9	2.0	2.1	2.2	2.3	2.4	2.5	2.6	2.7	2.8	2.9	3.0	3.1	3.2	3.3	3.4	3.5	3.6	3.65	3.70	3.75	3.80	3.85	3.90	3.95
MWS-L-4-4	6.70	1.0	0.022	0.023	0.025	0.026	0.028	0.029	0.031	0.032	0.034	0.035	0.037	0.038	0.040	0.042	0.043	0.045	0.046	0.048	0.049	0.051	0.052	0.054	0.055	0.056	0.057	0.058	0.058	0.059	0.060	0.061
~~MWS-L-5-6~~	~~10.00~~	~~1.0~~	~~0.032~~	~~0.033~~	~~0.037~~	~~0.039~~	~~0.042~~	~~0.044~~	~~0.046~~	~~0.048~~	~~0.051~~	~~0.053~~	~~0.055~~	~~0.058~~	~~0.060~~	~~0.062~~	~~0.065~~	~~0.067~~	~~0.069~~	~~0.072~~	~~0.074~~	~~0.076~~	~~0.078~~	~~0.081~~	~~0.083~~	~~0.084~~	~~0.085~~	~~0.087~~	~~0.088~~	~~0.089~~	~~0.090~~	~~0.091~~
MWS-L-4-6	9.30	1.0	0.030	0.032	0.034	0.036	0.038	0.041	0.043	0.045	0.047	0.049	0.051	0.053	0.055	0.058	0.060	0.062	0.064	0.066	0.068	0.070	0.073	0.075	0.077	0.078	0.079	0.080	0.081	0.082	0.083	0.084
MWS-L-4-8	14.80	1.0	0.048	0.051	0.054	0.058	0.061	0.065	0.068	0.071	0.075	0.078	0.082	0.085	0.088	0.092	0.095	0.099	0.102	0.105	0.109	0.112	0.115	0.119	0.122	0.124	0.126	0.127	0.129	0.131	0.132	0.134
MWS-L-4-13	18.40	1.0	0.059	0.063	0.068	0.072	0.076	0.080	0.084	0.089	0.093	0.097	0.101	0.106	0.110	0.114	0.118	0.122	0.127	0.131	0.135	0.139	0.144	0.148	0.152	0.154	0.156	0.158	0.160	0.163	0.165	0.167
MWS-L-4-15	22.40	1.0	0.072	0.077	0.082	0.087	0.093	0.098	0.103	0.108	0.113	0.118	0.123	0.129	0.134	0.139	0.144	0.149	0.154	0.159	0.165	0.170	0.175	0.180	0.185	0.188	0.190	0.193	0.195	0.198	0.200	0.203
MWS-L-4-17	26.40	1.0	0.085	0.091	0.097	0.103	0.109	0.115	0.121	0.127	0.133	0.139	0.145	0.151	0.158	0.164	0.170	0.176	0.182	0.188	0.194	0.200	0.206	0.212	0.218	0.221	0.224	0.227	0.230	0.233	0.236	0.239
MWS-L-4-19	30.40	1.0	0.098	0.105	0.112	0.119	0.126	0.133	0.140	0.147	0.153	0.160	0.167	0.174	0.181	0.188	0.195	0.202	0.209	0.216	0.223	0.230	0.237	0.244	0.251	0.255	0.258	0.262	0.265	0.269	0.272	0.276
MWS-L-4-21	34.40	1.0	0.111	0.118	0.126	0.134	0.142	0.150	0.158	0.166	0.174	0.182	0.189	0.197	0.205	0.213	0.221	0.229	0.237	0.245	0.253	0.261	0.268	0.276	0.284	0.288	0.292	0.296	0.300	0.304	0.308	0.312
MWS-L-6-8	18.80	1.0	0.060	0.065	0.069	0.073	0.078	0.082	0.086	0.091	0.095	0.099	0.104	0.108	0.112	0.116	0.121	0.125	0.129	0.134	0.138	0.142	0.147	0.151	0.155	0.157	0.160	0.162	0.164	0.166	0.168	0.170
MWS-L-8-8	29.60	1.0	0.095	0.102	0.109	0.115	0.122	0.129	0.136	0.143	0.149	0.156	0.163	0.170	0.177	0.183	0.190	0.197	0.204	0.211	0.217	0.224	0.231	0.238	0.245	0.248	0.251	0.255	0.258	0.262	0.265	0.268
MWS-L-8-12	44.40	1.0	0.143	0.153	0.163	0.173	0.183	0.194	0.204	0.214	0.224	0.234	0.245	0.255	0.265	0.275	0.285	0.296	0.306	0.316	0.326	0.336	0.346	0.357	0.367	0.372	0.377	0.382	0.387	0.392	0.397	0.402
MWS-L-8-16	59.20	1.0	0.190	0.204	0.217	0.231	0.245	0.258	0.272	0.285	0.299	0.312	0.326	0.340	0.353	0.367	0.380	0.394	0.408	0.421	0.435	0.448	0.462	0.476	0.489	0.496	0.503	0.509	0.516	0.523	0.530	0.537
MWS-L-8-20	74.00	1.0	0.238	0.255	0.272	0.289	0.306	0.323	0.340	0.357	0.374	0.391	0.408	0.425	0.442	0.459	0.476	0.493	0.509	0.526	0.543	0.560	0.577	0.594	0.611	0.620	0.628	0.637	0.645	0.654	0.662	0.671
MWS-L-10-20 or MWS-L-8-24	88.80	1.0	0.285	0.306	0.326	0.346	0.367	0.387	0.408	0.428	0.448	0.469	0.489	0.509	0.530	0.550	0.571	0.591	0.611	0.632	0.652	0.673	0.693	0.713	0.734	0.744	0.754	0.764	0.774	0.785	0.795	0.805
4'x'4 media cage	14.80	1.0	0.048	0.051	0.054	0.058	0.061	0.065	0.068	0.071	0.075	0.078	0.082	0.085	0.088	0.092	0.095	0.099	0.102	0.105	0.109	0.112	0.115	0.119	0.122	0.124						

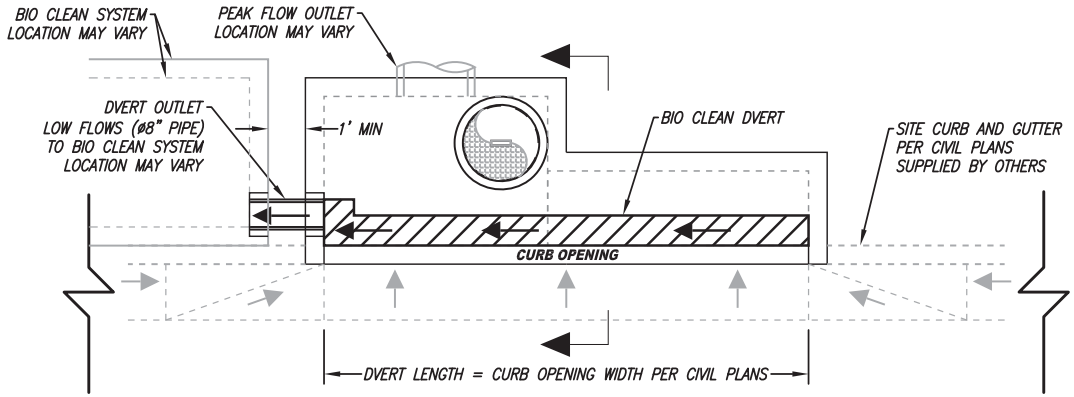

PLAN VIEW

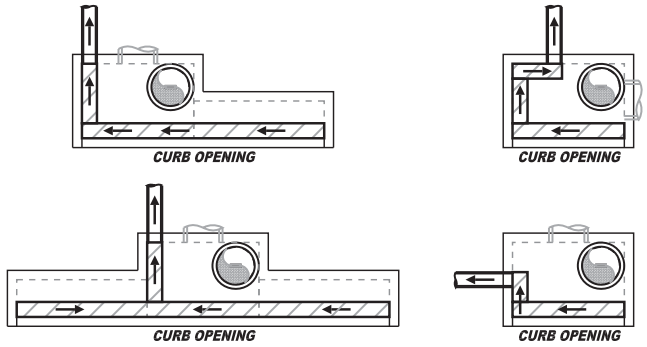

ALTERNATE CONFIGURATIONS

CONTACT BIO CLEAN FOR ADDITIONAL CUSTOM CONFIGURATIONS

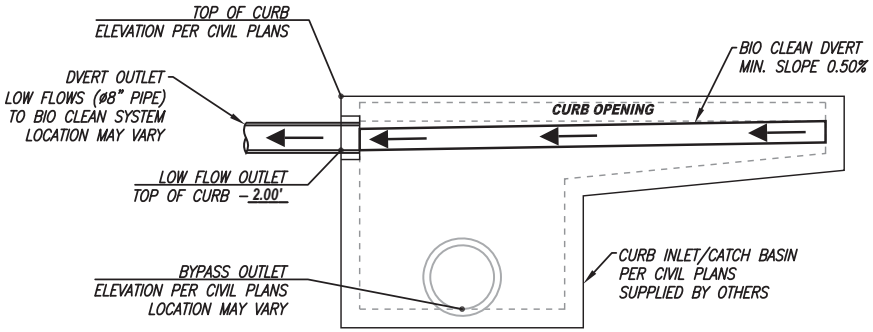

ELEVATION VIEW

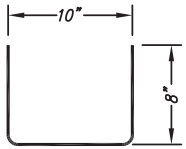

DVERT END VIEW

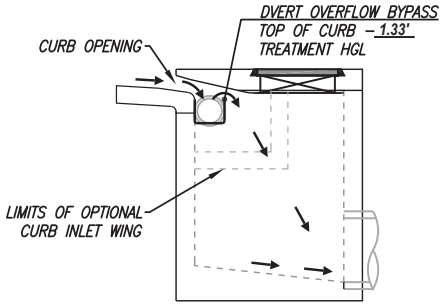

SECTION VIEW

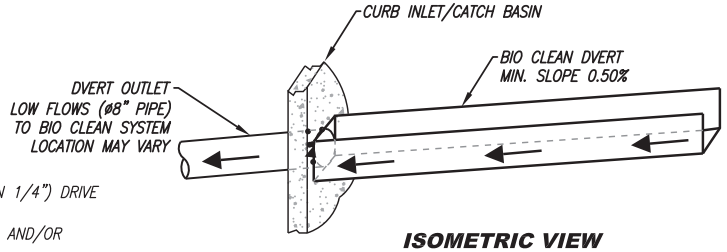

ISOMETRIC VIEW

INSTALLATION NOTES

1. DVERT TO BE CONNECTED TO CONCRETE BELOW CURB OPENING USING 316 STAINLESS STEEL (MIN 1/4") DRIVE PIN ANCHORS SPACED 12" ON CENTER AND 316 STAINLESS STEEL RIVETS (MIN 3/16").
2. ALL SEAMS BETWEEN DVERT AND CONCRETE SHALL BE FILLED WITH WATERTIGHT CONCRETE FILLER AND/OR SILICONE SEALANT.
3. CONTRACTOR TO SUPPLY AND INSTALL ALL EXTERNAL CONNECTING PIPES. ALL PIPES MUST BE FLUSH WITH INSIDE SURFACE OF CONCRETE. PIPES CANNOT INTRUDE BEYOND FLUSH. INVERT OF OUTFLOW PIPE MUST BE FLUSH WITH THE FLOWLINE OF THE DVERT. ALL PIPES SHALL BE SEALED WATERTIGHT PER MANUFACTURER'S STANDARD CONNECTION DETAIL.
4. CONTRACTOR RESPONSIBLE FOR CONTACTING BIO CLEAN FOR ACTIVATION OF MODULAR WETLANDS (MWS) UNIT. MANUFACTURER'S WARRANTY IS VOID WITHOUT PROPER ACTIVATION BY A BIO CLEAN REPRESENTATIVE.

MAXIMUM LOW FLOW DIVERSION (CFS)	0.74
LOW FLOW OUTLET PIPE SIZE (INCHES)	ø8"
STATIC HEAD (INCHES)	8"
SAFETY FACTOR	2

PROPRIETARY AND CONFIDENTIAL:

THE INFORMATION CONTAINED IN THIS DOCUMENT IS THE SOLE PROPERTY OF FORTERRA AND ITS COMPANIES. THIS DOCUMENT, NOR ANY PART THEREOF, MAY BE USED, REPRODUCED OR MODIFIED IN ANY MANNER WITH OUT THE WRITTEN CONSENT OF FORTERRA.

Bio Clean
A Forterra Company

DVERT DVT-10-8
MODULAR TROUGH DIVERSION SYSTEM
STANDARD DETAIL

2/5/2015 2:57:45 PM

MODULAR WETLAND SYSTEMS - LINEAR 2.0
STANDARD DVERT CONFIGURATION

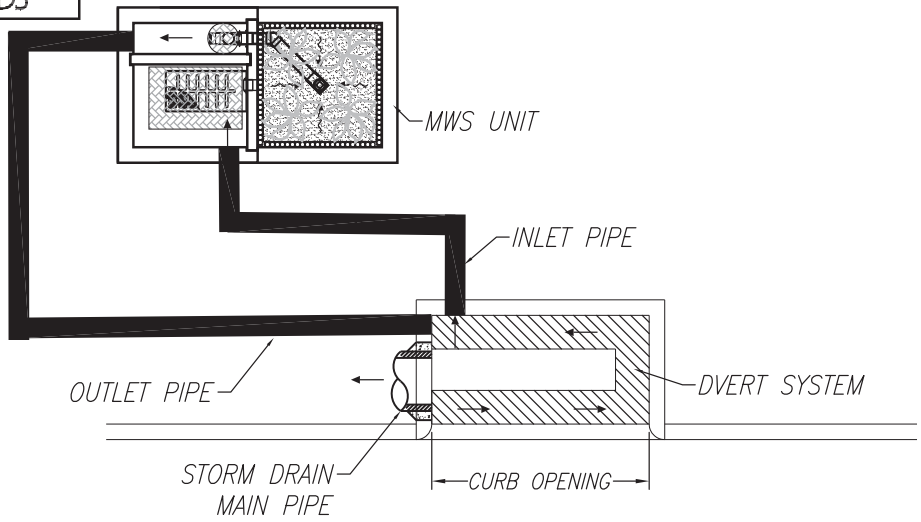

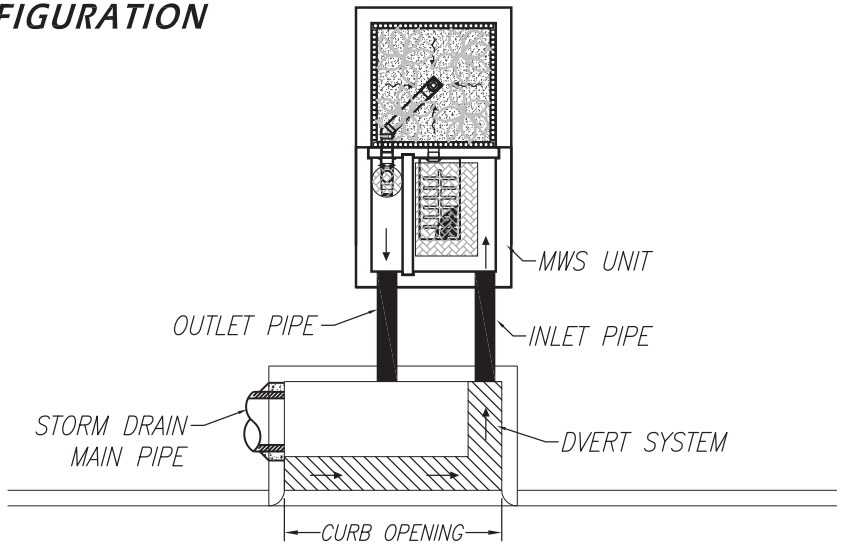

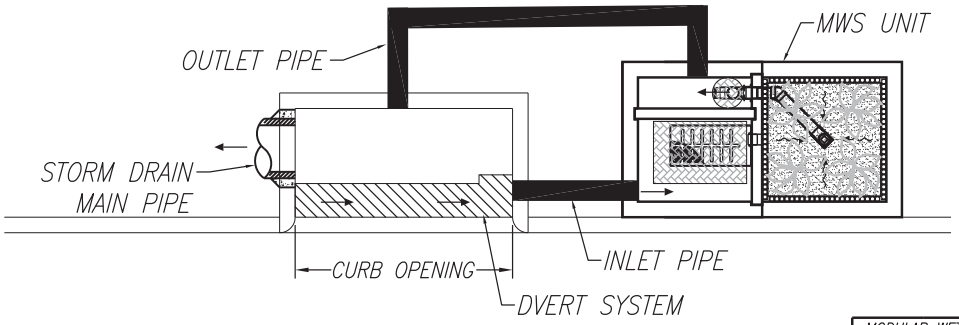

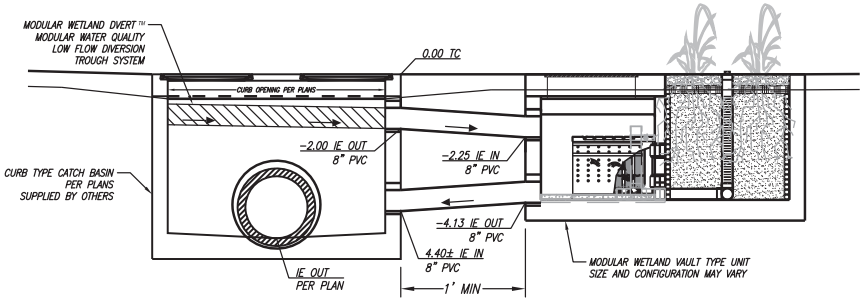

MODULAR WETLAND SYSTEMS INC. P.O. BOX 869 OCEANSIDE, CA 92049 www.ModularWetlands.com		NAME	DATE
	DRAWN		
	EDITED		
PROPRIETARY AND CONFIDENTIAL THE INFORMATION CONTAINED IN THIS DRAWING IS THE SOLE PROPERTY OF MODULAR WETLAND SYSTEMS INC. ANY REPRODUCTION IN PART OR AS A WHOLE WITHOUT THE WRITTEN PERMISSION OF MODULAR WETLAND SYSTEMS INC. IS PROHIBITED.	COMMENTS:		

TITLE: MWS LINEAR 2.0 DVERT SETUP

SIZE	DWG. NO.	REV

SCALE NTS | UNITS = INCHES | SHEET 1 OF 1

SITE SPECIFIC DATA			
PROJECT NAME			
PROJECT LOCATION			
STRUCTURE ID			
TREATMENT REQUIRED			
VOLUME BASED (CF)		FLOW BASED (CFS)	
TREATMENT HGL AVAILABLE (FT)			
PEAK BYPASS REQUIRED (CFS) – IF APPLICABLE			
PIPE DATA	I.E.	MATERIAL	DIAMETER
INLET PIPE 1			
INLET PIPE 2			
OUTLET PIPE			
	PRETREATMENT	BIOFILTRATION	DISCHARGE
RIM ELEVATION			
SURFACE LOAD	PARKWAY	OPEN PLANTER	PARKWAY
FRAME & COVER	36" X 36"	N/A	N/A
WETLANDMEDIA VOLUME (CY)			2.03
WETLANDMEDIA DELIVERY METHOD			TBD
ORIFICE SIZE (DIA. INCHES)			ø1.53"
MAXIMUM PICK WEIGHT (LBS)			15000
NOTES:			

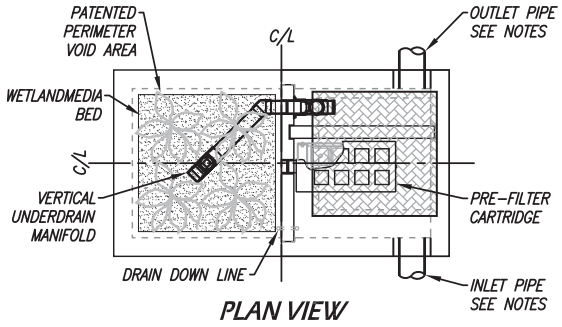

PLAN VIEW

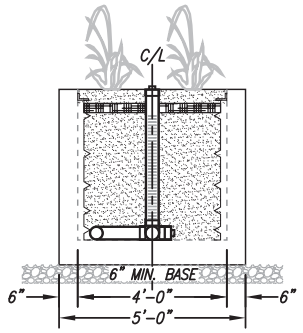

LEFT END VIEW
BIOFILTRATION

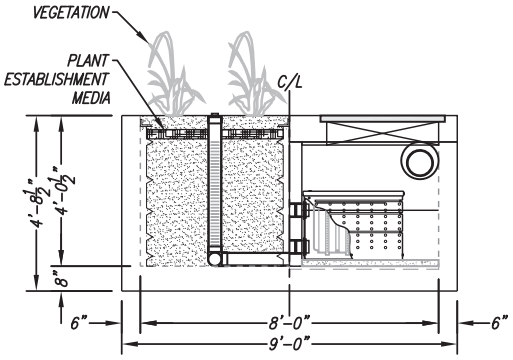

ELEVATION VIEW

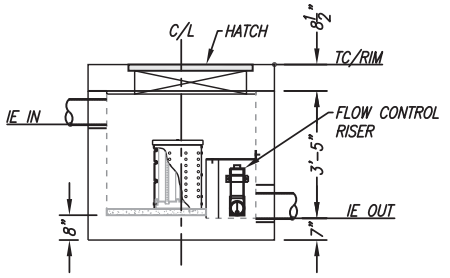

RIGHT END VIEW
PRETREATMENT/DISCHARGE

INSTALLATION NOTES

1. CONTRACTOR TO PROVIDE ALL LABOR, EQUIPMENT, MATERIALS AND INCIDENTALS REQUIRED TO OFFLOAD AND INSTALL THE SYSTEM AND APPURTENANCES IN ACCORDANCE WITH THIS DRAWING AND THE MANUFACTURERS SPECIFICATIONS, UNLESS OTHERWISE STATED IN MANUFACTURERS CONTRACT.
2. UNIT MUST BE INSTALLED ON LEVEL BASE. MANUFACTURER RECOMMENDS A MINIMUM 6" LEVEL ROCK BASE UNLESS SPECIFIED BY THE PROJECT ENGINEER. CONTRACTOR IS RESPONSIBLE TO VERIFY PROJECT ENGINEERS RECOMMENDED BASE SPECIFICATIONS.
3. ALL PIPES MUST BE FLUSH WITH INSIDE SURFACE OF CONCRETE. (PIPES CANNOT INTRUDE BEYOND FLUSH). INVERT OF OUTFLOW PIPE MUST BE FLUSH WITH DISCHARGE CHAMBER FLOOR. ALL GAPS AROUND PIPES SHALL BE SEALED WATER TIGHT WITH A NON-SHRINK GROUT PER MANUFACTURERS STANDARD CONNECTION DETAIL AND SHALL MEET OR EXCEED REGIONAL PIPE CONNECTION STANDARDS.
4. CONTRACTOR TO SUPPLY AND INSTALL ALL EXTERNAL CONNECTING PIPES.
5. CONTRACTOR RESPONSIBLE FOR INSTALLATION OF ALL RISERS, MANHOLES, AND HATCHES. CONTRACTOR TO GROUT ALL MANHOLES AND HATCHES TO MATCH FINISHED SURFACE UNLESS SPECIFIED OTHERWISE.
6. DRIP OR SPRAY IRRIGATION REQUIRED ON ALL UNITS WITH VEGETATION.

GENERAL NOTES

1. MANUFACTURER TO PROVIDE ALL MATERIALS UNLESS OTHERWISE NOTED.
2. ALL DIMENSIONS, ELEVATIONS, SPECIFICATIONS AND CAPACITIES ARE SUBJECT TO CHANGE. FOR PROJECT SPECIFIC DRAWINGS DETAILING EXACT DIMENSIONS, WEIGHTS AND ACCESSORIES PLEASE CONTACT MANUFACTURER.

TREATMENT FLOW (CFS)	0.115
OPERATING HEAD (FT)	3.4
PRETREATMENT LOADING RATE (GPM/SF)	TBD
WETLAND MEDIA LOADING RATE (GPM/SF)	1.0

THE PRODUCT DESCRIBED MAY BE PROTECTED BY ONE OR MORE OF THE FOLLOWING US PATENTS: 7,425,262; 7,470,362; 7,674,378; 8,303,816; RELATED FOREIGN PATENTS OR OTHER PATENTS PENDING

PROPRIETARY AND CONFIDENTIAL:

THE INFORMATION CONTAINED IN THIS DRAWING IS THE SOLE PROPERTY OF MODULAR WETLANDS SYSTEMS. ANY REPRODUCTION IN PART OR AS A WHOLE WITHOUT THE WRITTEN PERMISSION OF MODULAR WETLANDS SYSTEMS IS PROHIBITED.

MODULAR WETLANDS
www.ModularWetlands.com | (855) 6MOD-WET

MWS-L-4-8-V
STORMWATER BIOFILTRATION SYSTEM
STANDARD DETAIL

SITE SPECIFIC DATA*	
PROJECT NAME	
PROJECT LOCATION	
STRUCTURE ID	

PERFORMANCE DATA	
TREATMENT FLOW (CFS)	
TREATMENT HGL (FT)	
BYPASS FLOW RATE (CFS)	DEPENDANT ON PIPE SIZE

PROJECT PARAMETERS			
PIPE DATA	I.E.	MATERIAL	DIAMETER
INLET PIPE 1		PVC	
OUTLET PIPE		PVC	
RIM ELEVATION			
SURFACE LOADING REQUIREMENT		PARKWAY	

FRAME & COVER	PRETREATMENT	BIOFILTRATION	DISCHARGE
	30"	OPEN PLANTER	12"

WETLANDMEDIA VOLUME (CY)	
MEDIA DELIVERED	TBD
ORIFICE SIZE (DIA)	
MAX PICK WEIGHT (LBS)	TBD
NOTES: *PER ENGINEER OF RECORD	

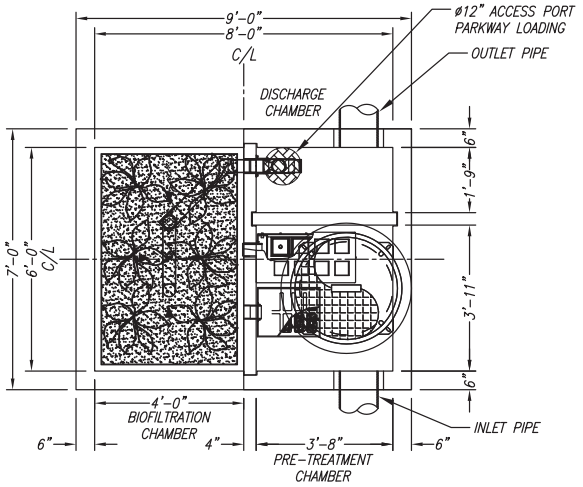

PLAN VIEW

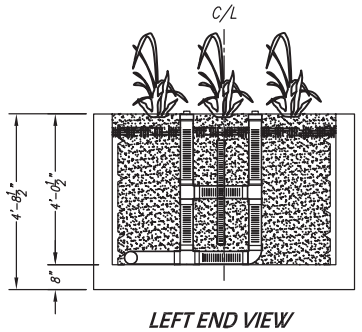

LEFT END VIEW
BIOFILTRATION CHAMBER

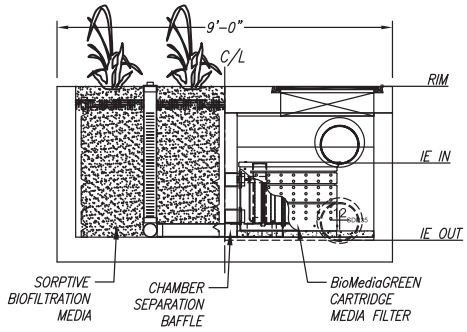

ELEVATION VIEW

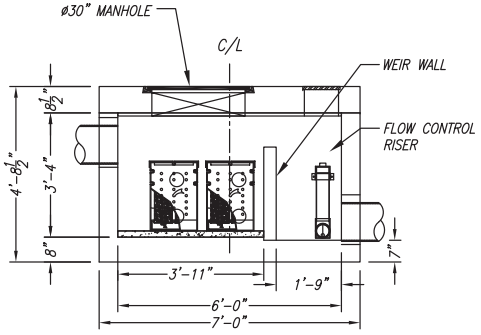

RIGHT END VIEW
PRETREATMENT/DISCHARGE CHAMBER

INSTALLATION NOTES

1. CONTRACTOR TO PROVIDE ALL LABOR, EQUIPMENT, MATERIALS AND INCIDENTALS REQUIRED TO OFFLOAD AND INSTALL THE SYSTEM AND APPURTENANCES IN ACCORDANCE WITH THIS DRAWING AND THE MANUFACTURERS SPECIFICATIONS, UNLESS OTHERWISE STATED IN MANUFACTURERS CONTRACT.
2. MANUFACTURER RECOMMENDS A MINIMUM 6"LEVEL ROCK BASE UNLESS SPECIFIED BY THE PROJECT ENGINEER. CONTRACTOR IS RESPONSIBLE TO VERIFY PROJECT ENGINEERS RECOMMENDED BASE SPECIFICATIONS.
3. ALL PIPES MUST BE FLUSH WITH INSIDE SURFACE OF CONCRETE. (PIPES CANNOT INTRUDE BEYOND FLUSH).
4. INVERT OF OUTFLOW PIPE MUST BE FLUSH WITH DISCHARGE CHAMBER FLOOR.
5. CONTRACTOR TO SUPPLY AND INSTALL ALL EXTERNAL CONNECTING PIPES.
6. ALL GAPS AROUND PIPES SHALL BE SEALED WATER TIGHT WITH A NON-SHRINK GROUT PER MANUFACTURERS STANDARD CONNECTION DETAIL AND SHALL MEET OR EXCEED REGIONAL PIPE CONNECTION STANDARDS.
7. CONTRACTOR RESPONSIBLE FOR INSTALLATION OF ALL RISERS, MANHOLES, AND HATCHES. CONTRACTOR TO GROUT ALL MANHOLES AND HATCHES TO MATCH FINISHED SURFACE UNLESS SPECIFIED OTHERWISE.

GENERAL NOTES

1. MANUFACTURER TO PROVIDE ALL MATERIALS UNLESS OTHERWISE NOTED.
2. ALL DIMENSIONS, ELEVATIONS, SPECIFICATIONS AND CAPACITIES ARE SUBJECT TO CHANGE. FOR PROJECT SPECIFIC DRAWINGS DETAILING EXACT DIMENSIONS, WEIGHTS AND ACCESSORIES PLEASE CONTACT MANUFACTURER.

TREATMENT CAPACITY (CFS)	0.147
OPERATING HEAD (FT)	3.40
PRE-FILTER LOADING RATE (GPM/SF)	2.07
WETLAND LOADING RATE (GPM/SF)	1.03

THE PRODUCT DESCRIBED MAY BE PROTECTED BY ONE OR MORE OF THE FOLLOWING US PATENTS: 7,425,262; 7,470,362; 7,674,378; 8,303,816; RELATED FOREIGN PATENTS OR OTHER PATENTS PENDING

PROPRIETARY AND CONFIDENTIAL:

THE INFORMATION CONTAINED IN THIS DRAWING IS THE SOLE PROPERTY OF MODULAR WETLANDS SYSTEMS. ANY REPRODUCTION IN PART OR AS A WHOLE WITHOUT THE WRITTEN PERMISSION OF MODULAR WETLANDS SYSTEMS IS PROHIBITED.

MODULAR WETLANDS

MWS-L-6-8-V
STORMWATER BIOFILTRATION SYSTEM
STANDARD DETAIL

SITE SPECIFIC DATA			
PROJECT NAME		KATELLA AVENUE PROJECT	
PROJECT LOCATION		5701 KATELLA AVENUE, CYPRESS	
STRUCTURE ID		TBD	
TREATMENT REQUIRED			
VOLUME BASED (CF)		FLOW BASED (CFS)	
N/A		0.156	
TREATMENT HGL AVAILABLE (FT)			TBD
PEAK BYPASS REQUIRED (CFS) – IF APPLICABLE			N/A
PIPE DATA	I.E.	MATERIAL	DIAMETER
INLET PIPE 1	TBD	TBD	TBD
INLET PIPE 2	TBD	TBD	TBD
OUTLET PIPE	TBD	TBD	TBD
	PRETREATMENT	BIOFILTRATION	DISCHARGE
RIM ELEVATION	TBD	TBD	TBD
SURFACE LOAD	PARKWAY	OPEN PLANTER	PARKWAY
FRAME & COVER	ø30"	N/A	ø24"
WETLANDMEDIA VOLUME (CY)			4.84
WETLANDMEDIA DELIVERY METHOD			TBD
ORIFICE SIZE (DIA. INCHES)			ø2.16"
MAXIMUM PICK WEIGHT (LBS)			TBD
NOTES:			

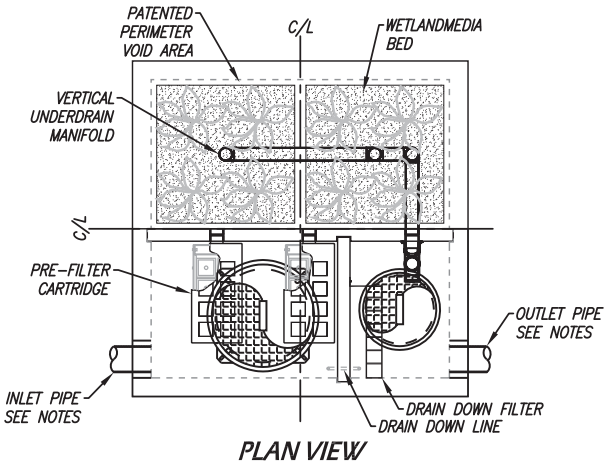

PLAN VIEW

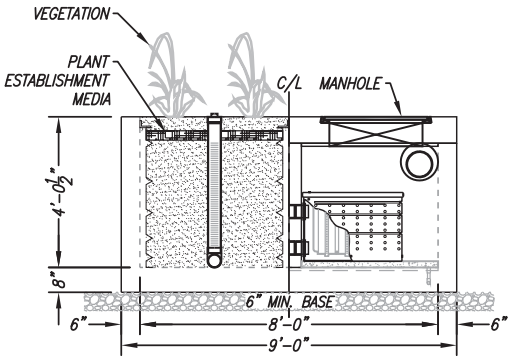

LEFT END VIEW
BIOFILTRATION/PRETREATMENT

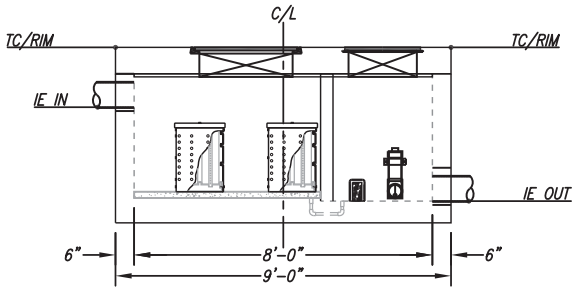

ELEVATION VIEW

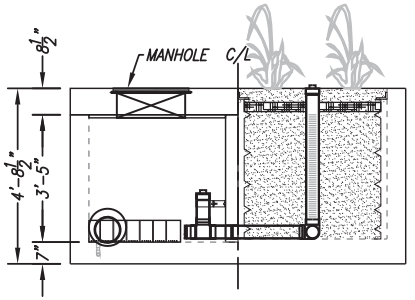

RIGHT END VIEW
DISCHARGE/BIOFILTRATION

INSTALLATION NOTES

1. CONTRACTOR TO PROVIDE ALL LABOR, EQUIPMENT, MATERIALS AND INCIDENTALS REQUIRED TO OFFLOAD AND INSTALL THE SYSTEM AND APPURTENANCES IN ACCORDANCE WITH THIS DRAWING AND THE MANUFACTURERS SPECIFICATIONS, UNLESS OTHERWISE STATED IN MANUFACTURERS CONTRACT.
2. UNIT MUST BE INSTALLED ON LEVEL BASE. MANUFACTURER RECOMMENDS A MINIMUM 6" LEVEL ROCK BASE UNLESS SPECIFIED BY THE PROJECT ENGINEER. CONTRACTOR IS RESPONSIBLE TO VERIFY PROJECT ENGINEERS RECOMMENDED BASE SPECIFICATIONS.
3. ALL PIPES MUST BE FLUSH WITH INSIDE SURFACE OF CONCRETE. (PIPES CANNOT INTRUDE BEYOND FLUSH). INVERT OF OUTFLOW PIPE MUST BE FLUSH WITH DISCHARGE CHAMBER FLOOR. ALL GAPS AROUND PIPES SHALL BE SEALED WATER TIGHT WITH A NON-SHRINK GROUT PER MANUFACTURERS STANDARD CONNECTION DETAIL AND SHALL MEET OR EXCEED REGIONAL PIPE CONNECTION STANDARDS.
4. CONTRACTOR TO SUPPLY AND INSTALL ALL EXTERNAL CONNECTING PIPES.
5. CONTRACTOR RESPONSIBLE FOR INSTALLATION OF ALL RISERS, MANHOLES, AND HATCHES. CONTRACTOR TO GROUT ALL MANHOLES AND HATCHES TO MATCH FINISHED SURFACE UNLESS SPECIFIED OTHERWISE.
6. DRIP OR SPRAY IRRIGATION REQUIRED ON ALL UNITS WITH VEGETATION.

GENERAL NOTES

1. MANUFACTURER TO PROVIDE ALL MATERIALS UNLESS OTHERWISE NOTED.
2. ALL DIMENSIONS, ELEVATIONS, SPECIFICATIONS AND CAPACITIES ARE SUBJECT TO CHANGE. FOR PROJECT SPECIFIC DRAWINGS DETAILING EXACT DIMENSIONS, WEIGHTS AND ACCESSORIES PLEASE CONTACT MANUFACTURER.

TREATMENT FLOW (CFS)	0.230
OPERATING HEAD (FT)	3.4
PRETREATMENT LOADING RATE (GPM/SF)	TBD
WETLAND MEDIA LOADING RATE (GPM/SF)	1.0

THE PRODUCT DESCRIBED MAY BE PROTECTED BY ONE OR MORE OF THE FOLLOWING US PATENTS: 7,425,262; 7,470,362; 7,674,378; 8,303,816; RELATED FOREIGN PATENTS OR OTHER PATENTS PENDING

PROPRIETARY AND CONFIDENTIAL:

THE INFORMATION CONTAINED IN THIS DRAWING IS THE SOLE PROPERTY OF MODULAR WETLANDS SYSTEMS. ANY REPRODUCTION IN PART OR AS A WHOLE WITHOUT THE WRITTEN PERMISSION OF MODULAR WETLANDS SYSTEMS IS PROHIBITED.

MODULAR WETLANDS
www.ModularWetlands.com | (855) 6MOD-WET

MWS-L-8-8-V
STORMWATER BIOFILTRATION SYSTEM
STANDARD DETAIL

SPECIFICATIONS

MWS – Linear

Hybrid Stormwater Filtration System



Modular Wetland Systems, Inc.
P.O. Box 869
Oceanside, CA 92049

www.modularwetlands.com
P 760-433-7640
F 760-433-3179

MWS – Linear

Hybrid Stormwater Filtration System

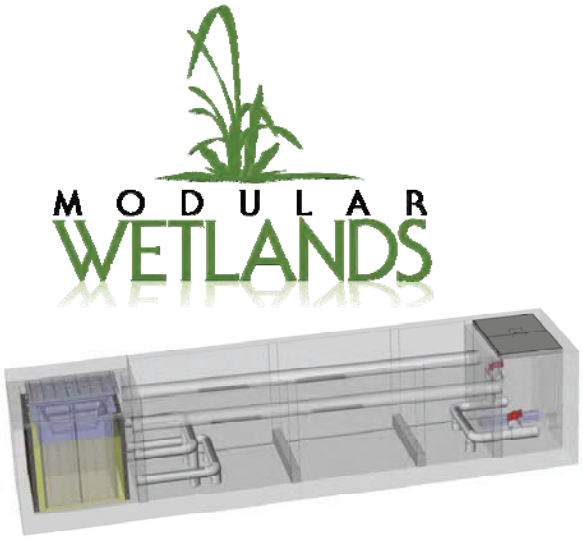

Save valuable space with small footprint for urban sites.

Improve BMP aesthetics with attractive native and tropical landscape plants.

Reduce lifetime costs with safer and less expensive maintenance

"The MWS – Linear hybrid stormwater treatment system is described as a self contained treatment train. This system utilizes an innovative combination of l treatment processes. Stormwater runoff flows into the system via pipe or curb/grate type catch basin opening. Polluted runoff first encounters a screening device to remove larger pollutants and then enters a hydrodynamic separation chamber which settles out the sediments and larger suspended solids. Next the runoff is treated by a revolutionary filter media, BioMediaGREEN that removes fines and associated pollutants, including bacteria. From there runoff enters of bioretention filter in the form of a subsurface flow vegetated gravel wetland. Within the wetland physical, chemical, and biological mechanisms remove the remaining particulate and dissolved pollutants. The purified runoff leaves the system via the discharge chamber. In the discharge chamber the rate of discharge is controlled by valves set to a desired rate".

Tested Pollutant Removal Efficiencies:

TSS Removal	Dissolved Lead Removal	Dissolved Copper Removal	TPH	E. coli Removal	Turbidity Removal
98%	81%	92%	99%	60.2%	92%

"Nature and Harmony Working Together in Perfect Harmony"

SPECIFICATIONS – MWS- LINEAR

Track Record: The MWS- Linear Hybrid Stormwater Treatment System is manufactured by a company whom is regularly engaged in the engineering design and production of treatment systems for stormwater.

Coverage: The MWS- Linear is designed to treat the water quality volume or water quality flow. For flow based design, high flow bypass is internal, for volume based design, high flow bypass is external and prior to pre-detention system. For offline volume based designs the MWS - Linear has the ability to treat the entire water quality volume when used with pre-storage and properly sized.

Non-Corrosive Materials: The MWS – Linear is designed with non-corrosive materials. All internal piping is SD35 PVC. Catch basin filter components, including mounting hardware, fasteners, support brackets, filtration material, and support frame are constructed of non-corrosive materials (316 stainless steel, and UV protected/marine grade fiberglass). Fasteners are stainless steel. Primary filter mesh is 316 stainless steel welded screens. Filtration basket screens for coarse, medium and fine filtration is ¾" x 1 ¾"expanded, 10 x 10 mesh, and 35 x 35 mesh, respectively. No polypropylene, monofilament netting or fabrics shall be used in this system. Media Protective Panels are constructed of UV protected/marine grade fiberglass. Mounts are constructed of stainless steel. BioMediaGREEN is an inert rock substrate and is non-corrosive. Perimeter filter structure is constructed of lightweight injection molded plastic. Mounting brackets are constructed of SD40 PVC and are mounted with 3/8" diameter stainless steel redheads. Drain down filter cover is constructed of UV protected/marine grade fiberglass and stainless steel hinge and mount.

Weight: Each complete unit weighs approximately 29,000 to 40,000 pounds and requires a boom crane to install. Details of this are provided in the installation section of the MWS-Linear Design Kit.

Transportation: The Modular Wetland System – Linear is designed to be transported on a standard flat bed truck. The unit easily fits on a flat bed truck without the need of special permitting.

Alternative Technology Configurations: The Modular Wetland System – Linear is modular is design. Each module will be up to 22 feet long and 5 feet wide. The system can be made in lengths varying from 13 to 100s of feet long. For lengths longer than 22 feet the system will shipped in modules and assembled on site. The Modular Wetland System – Linear has many alternative configurations. This allows the system to be adapted to many site conditions. Runoff can enter the system through a pipe, and/or a built in curb or grate type opening.

Energy Requirements: The Modular Wetland System – Linear is completely passive and requires no external energy sources.

Buoyancy Issues: Buoyancy is only a an issue when ground water levels rise above the bottom of the Modular Wetland System – Linear's concrete structure. With 8.5 cubic yards of wetland media there is no concern of floatation. As a precaution a footing can also be built into the systems concrete structure.

Durability: The structure of the box will be precast concrete. The concrete will be 28 day compressive strength fc = 5,000 psi. Steel reinforcing will be ASTM A – C857. Structure will support an H20 loading as indicted by AASHTO. The joint between the concrete sections will ship lap and joint sealed with ram-nek. Filter (excluding oil absorbent media) and support structures are of proven durability. The filter and mounting structures are of sufficient strength to support water, sediment, and debris loads when the filter is full, with no slippage, breaking, or tearing. All filters are warranted for a minimum of five (5) years.

Oil Absorbent Media: The MWS – Linear utilizes both physical and biological mechanisms to capture and filter oil and grease. A skimmer and boom system will be positioned on the internal perimeter of the catch basin insert. The primary filtration media, BioMediaGreen, utilized in the perimeter and drain down filters, has excellent hydrocarbon removal abilities. Within the wetland filter biological processes capture and

break down oil and grease. Much of the breakdown and transformation of oil and grease is performed by natural occurring bacteria.

Overflow Protection: The grate and curb type MWS – Linear are designed with an internal bypass consisting of two SD PVC pipes which direct high flows around the perimeter and wetland filter, directly into the discharge chamber. For the volume based vault type configuration, bypass should be located prior to the pre-detention system. For peak flows that exceed internal bypass capacity, external bypass is use.

Filter Bypass: Runoff will bypass filtration (BioMediaGREEN and wetland filter) components of the MWS - Linear. The system will still provide screening and settling during higher flow rates for internally bypassed flows. External bypass will bypass of treatment processes.

Pollutant Removal Efficiency: The MWS - Linear is capable of removing over 90% of the net annual total suspended solids (TSS) load based on a 20-micron particle size. Annual TSS removal efficiency models are based on documented removal efficiency performance from full-scale laboratory tests on BioMediaGreen and quarter-scale laboratory tests on the MWS – Linear flow based system.

POLLUTANT	REMOVAL EFFICIENCY
Trash & Litter	99%
TPH (mg/L)	99%
TSS (mg/L)	98%
E. Coli (MPN/100ml)	60%
Turbidity (NTU)	92%
Dissolved Metals (mg/L)	76%

Sil-Co-Sil 106. Mean particle diameter = 19 microns

Non-Scouring: During heavy storm events the runoff bypasses perimeter and wetland filter components. The system will not re-suspend solids at design flows.

Uniqueness: The Modular Wetland System – Linear is a complete self contained treatment train that incorporates capture, screening, sedimentation, filtration, bioretention, high flow bypass, and flow control into a single modular structure. This system provides four stages of treatment making it the only 4 stage treatment train stormwater filtration system, therefore making it unique to the industry. Other systems do not incorporate all the necessary attributes to make it a complete stormwater management device as with the Modular Wetland System – Linear. Therefore, no equal exists for this system.

Pretreatment & Preconditioning: Since the Modular Wetland System – Linear is a complete capture and treatment train stormwater management system no external pretreatment of preconditioning is necessary.

SPECIFICATIONS – BioMediaGREEN

BioMediaGREEN is a proprietary engineered filter media. Made of a unique combination of the inert naturally occurring material this product is non-combustible and do not pose a fire hazard, stable and non-reactive, and is also biodegradable. It is stable with no known adverse environmental effects.

This product has been tested in long-term carcinogenicity studies [inhalation and intraperitoneal injection (i.p.)] with no significant increase in lung tumors or abdominal tumors. Short-term biopersistent (inhalation and intra-tracheal injection) studies have shown that the products disappear very rapidly from the lung.

In October 2001, IARC classified this product as Group 3, "not classifiable as to its carcinogenicity to humans". The 2001 decision was based on the latest epidemiological studies and animal inhalation studies that show no relation between inhalation exposure and the development of tumors.

The product can typically be disposed of in an ordinary landfill (local regulations may apply). If you are unsure of the regulations, contact your local Public Health Department or the local office of the Environmental Protection Agency (EPA).

Coverage: When properly installed BioMediaGREEN Filter Blocks provide sufficient contact time, at rated flows, of passing contaminate water. The BioMediaGREEN material will capture and retain most pollutants that pass through it. The BioMediaGREEN material is made of a proprietary blend of inert substances. The BioMediaGREEN Filter Blocks can be used in different treatment devices, including but not limited to flume filters, trench drain filters, downspout filters, catch basin inserts, water polishing units, and hydrodynamic separators.

Non-Corrosive Materials: The BioMediaGreen material is made of non-corrosive materials.

Durability: The BioMediaGREEN material has been chosen for its proven durability, with an expected life of 2 plus years. The BioMediaGREEN material is of sufficient strength to support water, sediment, and debris loads when the media is at maximum flow; with no slippage, breaking, or tearing. The BioMediaGREEN material has been tested through rigorous flow and loading conditions.

Oil Absorbent Media: The BioMediaGREEN material has been proven to capture and retain hydrocarbons.

Pollutant Removal Efficiency: The BioMediaGREEN Filter Blocks are designed to capture high levels of Hydrocarbons including but not limited to oils & grease, gasoline, diesel, and PAHs. BioMediaGREEN Filter Blocks have the physical ability to block and filter trash and litter, grass and foliage, sediments, TSS, particulate and dissolved metals, nutrients, and bacteria.

BioMediaGREEN technology is based on a proprietary blend of synthetic inert natural substances aimed at removal of various stormwater pollutants. BioMediaGREEN was created to have a very porous structure capable of selectively removing pollutants while

allowing high flow through rates for water. As pollutants are captured by its structure, BioMediaGREEN captures most pollutants and maintains porosity and filtering capabilities.

Field and laboratory tests have confirmed the BioMediaGREEN capability to capture large percentage of TSS, hydrocarbons, nutrients, and heavy metals. Microbial reduction efficiency will vary depending on colony size, flow rates and site specific conditions.

POLLUTANT	REMOVAL EFFICIENCY
Oil & Grease (mg/L)	90%
TPH (mg/L)	99%
TSS (mg/L)	85%
Turbidity (NTU)	99%
Total Phosphorus (mg/L)	69.6%
Dissolved Metals (mg/L)	75.6%

Sil-Co-Sil 106. Mean particle diameter = 19 microns

Replacement: Removal and replacement of the blocks is simple. Remove blocks from filtration system. Replace with new block of equal size.

CONNECTOR PIPE SCREEN (CPS)
L 3.2

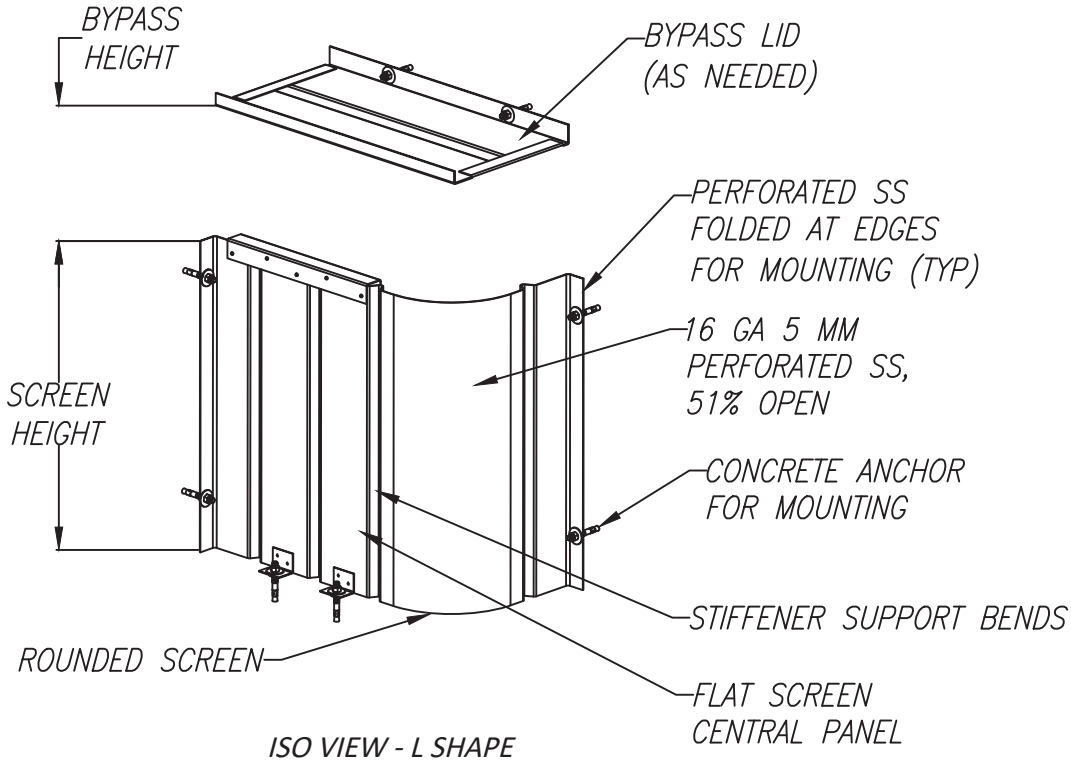

ISO VIEW - L SHAPE

CPS L WITH 3.2 FT SCREEN LENGTH	
CPS HEIGHT (IN)	SCREEN FLOW (CFS)
12	4.53
18	8.32
24	12.81
30	17.91
36	23.55
NOTE: BYPASS FLOW RATES VARY WITH VAULT DEPTH AND BYPASS HEIGHT. CONTACT BIO CLEAN FOR ADDITIONAL INFORMATION.	

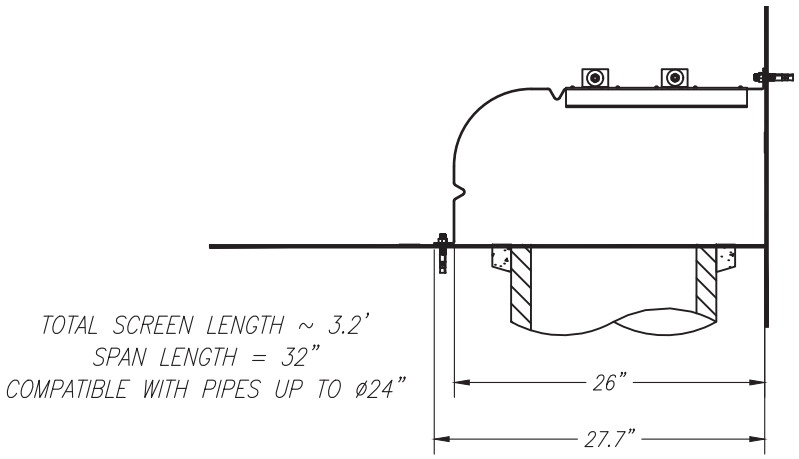

TOP SECTION VIEW - L SHAPE

GENERAL NOTES

1. BIO CLEAN TO PROVIDE ALL MATERIALS UNLESS OTHERWISE NOTED.
2. ALL DIMENSIONS, ELEVATIONS, SPECIFICATIONS, AND CAPACITIES ARE SUBJECT TO CHANGE.
3. THIS CPS UNIT IS DESIGNED FOR TREATMENT FLOWS THROUGH THE SCREEN. FLOWS GREATER THAN THE TREATMENT FLOW RATE WILL BYPASS OVER THE SCREEN.
4. A BYPASS LID IS REQUIRED WHEN THE OUTLET PIPE IS DIRECTLY BELOW THE CURB OPENING.
5. CPS IS COMPRISED OF 304 STAINLESS STEEL. THICKNESS IS 16 GAUGE. SCREEN PERFORATIONS ARE 5 MILLIMETERS IN DIAMETER. THE SCREEN AREA IS 51% OPEN SPACE.

INSTALLATION NOTES

1. CONTRACTOR TO PROVIDE ALL LABOR, EQUIPMENT, MATERIALS, AND INCIDENTALS REQUIRED TO INSTALL THE CPS UNIT AND APPURTENANCES IN ACCORDANCE WITH THIS DRAWING AND THE MANUFACTURER'S SPECIFICATIONS, UNLESS OTHERWISE STATED IN MANUFACTURER'S CONTRACT.
2. POSITION THE CPS SO IT IS EVENLY SPACED AROUND THE CONNECTOR PIPE, ENSURING A MIN. OF 4" SPACING AWAY FROM ANY CORNERS. SCREEN BOTTOM SHALL BE FLUSH WITH THE CATCH BASIN FLOOR, OR WITH GAPS NO GREATER THAN 5 MM.
3. IF A BYPASS LID IS REQUIRED, VERIFY THE BYPASS HEIGHT NEEDED AND MARK THAT LOCATION ON THE WALL DIRECTLY ABOVE THE BASE UPRIGHTS. LIFT THE LID IN PLACE AND MARK THE HOLE LOCATIONS FOR THE LID MOUNTING BRACKETS. SECURE THE LID WITH STAINLESS STEEL NUTS.

WARRANTY: 3 YEAR MANUFACTURER'S		MEETS FULL CAPTURE REQUIREMENTS	
BIO CLEAN ENVIRONMENTAL SERVICES, INC. 398 VIA EL CENTRO, OCEANSIDE CA 92058 PHONE: 760-433-7640		REVISIONS:	DATE:
		REVISIONS:	DATE:
DATE: 1/17/2020	SCALE: NTS	REVISIONS:	DATE:
DRAFTER: G.M.S.	UNITS = INCHES	REVISIONS:	DATE:

Bio Clean
A Forterra Company

CONNECTOR PIPE SCREEN (CPS)
L 3.7

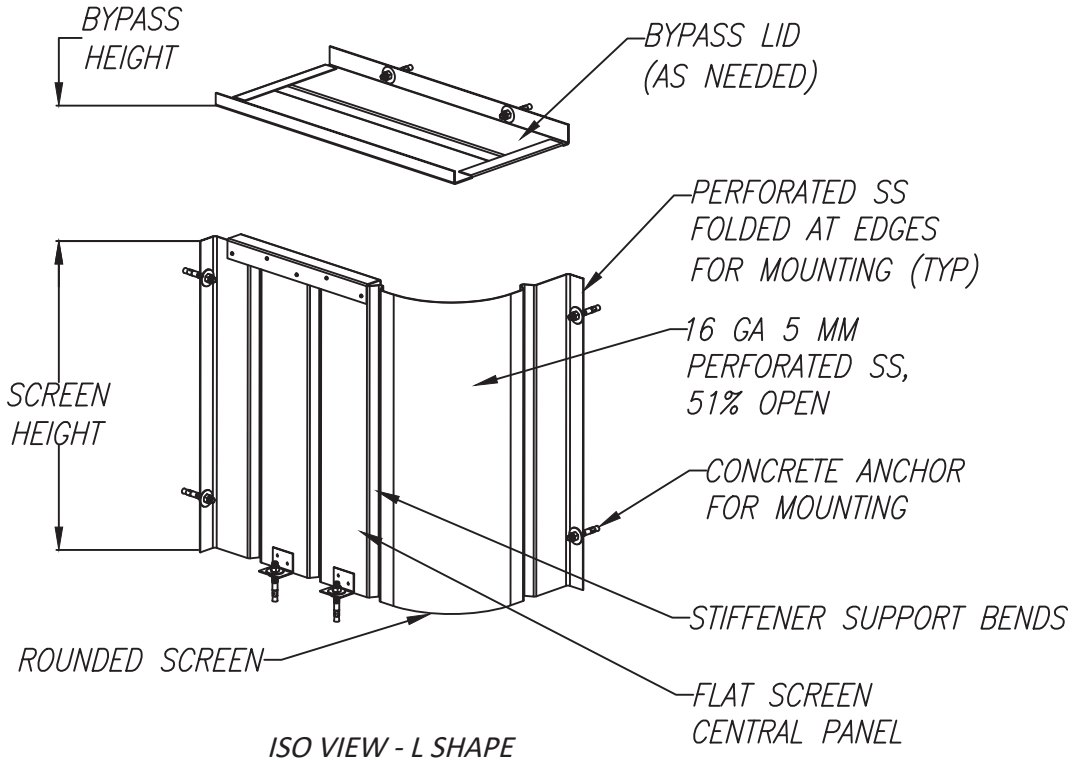

ISO VIEW - L SHAPE

CPS L WITH 3.7 FT SCREEN LENGTH	
CPS HEIGHT (IN)	SCREEN FLOW (CFS)
12	5.26
18	9.66
24	14.88
30	20.80
36	27.35
NOTE: BYPASS FLOW RATES VARY WITH VAULT DEPTH AND BYPASS HEIGHT. CONTACT BIO CLEAN FOR ADDITIONAL INFORMATION.	

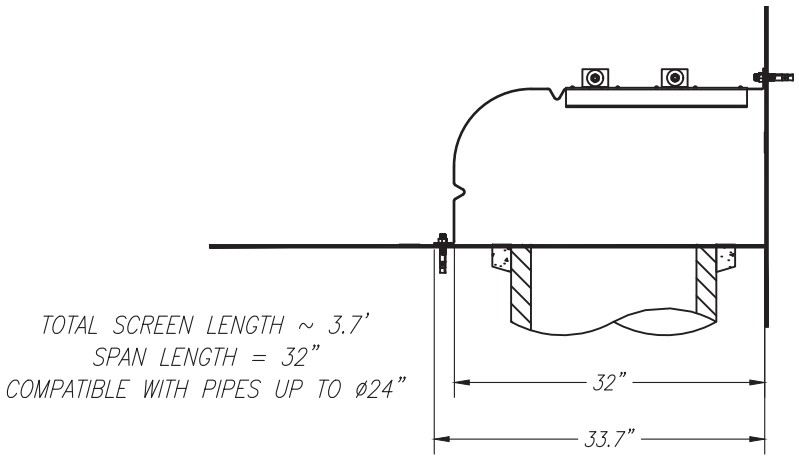

TOP SECTION VIEW - L SHAPE

GENERAL NOTES

1. BIO CLEAN TO PROVIDE ALL MATERIALS UNLESS OTHERWISE NOTED.
2. ALL DIMENSIONS, ELEVATIONS, SPECIFICATIONS, AND CAPACITIES ARE SUBJECT TO CHANGE.
3. THIS CPS UNIT IS DESIGNED FOR TREATMENT FLOWS THROUGH THE SCREEN. FLOWS GREATER THAN THE TREATMENT FLOW RATE WILL BYPASS OVER THE SCREEN.
4. A BYPASS LID IS REQUIRED WHEN THE OUTLET PIPE IS DIRECTLY BELOW THE CURB OPENING.
5. CPS IS COMPRISED OF 304 STAINLESS STEEL. THICKNESS IS 16 GAUGE. SCREEN PERFORATIONS ARE 5 MILLIMETERS IN DIAMETER. THE SCREEN AREA IS 51% OPEN SPACE.

INSTALLATION NOTES

1. CONTRACTOR TO PROVIDE ALL LABOR, EQUIPMENT, MATERIALS, AND INCIDENTALS REQUIRED TO INSTALL THE CPS UNIT AND APPURTENANCES IN ACCORDANCE WITH THIS DRAWING AND THE MANUFACTURER'S SPECIFICATIONS, UNLESS OTHERWISE STATED IN MANUFACTURER'S CONTRACT.
2. POSITION THE CPS SO IT IS EVENLY SPACED AROUND THE CONNECTOR PIPE, ENSURING A MIN. OF 4" SPACING AWAY FROM ANY CORNERS. SCREEN BOTTOM SHALL BE FLUSH WITH THE CATCH BASIN FLOOR, OR WITH GAPS NO GREATER THAN 5 MM.
3. IF A BYPASS LID IS REQUIRED, VERIFY THE BYPASS HEIGHT NEEDED AND MARK THAT LOCATION ON THE WALL DIRECTLY ABOVE THE BASE UPRIGHTS. LIFT THE LID IN PLACE AND MARK THE HOLE LOCATIONS FOR THE LID MOUNTING BRACKETS. SECURE THE LID WITH STAINLESS STEEL NUTS.

WARRANTY: 1 YEAR MANUFACTURER'S		MEETS FULL CAPTURE REQUIREMENTS	
BIO CLEAN ENVIRONMENTAL SERVICES, INC. 398 VIA EL CENTRO, OCEANSIDE CA 92058 PHONE: 760-433-7640		REVISIONS:	DATE:
		REVISIONS:	DATE:
DATE: 1/17/2020	SCALE: NTS	REVISIONS:	DATE:
DRAFTER: G.M.S.	UNITS = INCHES	REVISIONS:	DATE:

Bio Clean
A Forterra Company

Bio Clean
A Forterra Company

Section [_____]
Stormwater Connector Pipe Screen

PART 1 – GENERAL

01.01.00 Purpose
The purpose of this specification is to establish generally acceptable criteria for Connector Pipe Screens used for collecting trash and debris inside catch basins. It is intended to serve as a guide to producers, distributors, architects, engineers, contractors, plumbers, installers, inspectors, agencies and users; to promote understanding regarding materials, manufacture and installation; and to provide for identification of devices complying with this specification.

01.02.00 Description
Stormwater Connector Pipe Screens (CPS) are used to prevent trash and debris from entering the stormwater system during dry weather and moderate storm flows by keeping the trash inside the catch basin. The CPS is a screen placed permanently or temporarily in a catch basin at the location of the outlet pipe. The screen separates trash and debris from stormwater treatment flows. Flows that exceed the treatment flow rate bypass over the top of the screen. When the outlet pipe is located below a curb opening the CPS features a lid to prevent debris from passing behind the screen and flowing directly to the outlet pipe. The CPS shall be designed to retain all trash larger than 5 mm (0.197 inches) in the catch basin.

01.03.00 Manufacturer
The manufacturer of the CPS shall be one that is regularly engaged in the engineering, design and production of systems developed for the treatment of stormwater runoff for at least (10) years, and which has a history of successful production, acceptable to the engineer of work. In accordance with the drawings, the CPS(s) shall be a screen device manufactured/distributed by Bio Clean Environmental Services, Inc., or assigned distributors or licensees. Bio Clean Environmental Services, Inc. can be reached at:

5796 Armada Drive, Suite 250
Carlsbad, CA 92008
Phone: (760) 433-7640
Fax: (760) 433-3176
www.biocleanenvironmental.net

01.04.00 Submittals

01.04.01 Submittal drawings will be provided with each order to the contractor and engineer of work.

01.04.02 Submittal drawings are to detail the CPS, its components and the sequence for installation, including:

- CPS configuration with primary dimensions
- Various CPS components
- Any accessory equipment

01.04.03 Inspection and maintenance documentation submitted upon request.

01.05.00 Work Included

01.05.01 Specification requirements for installation of CPS.

01.05.02 Manufacturer to supply CPS(s):

- Screen
- Mounting hardware
- Bypass lid with supports (when required)

PART 2 – COMPONENTS

02.01.01 The CPS shall have a sufficient structural integrity to withstand a lateral force of standing water within the catch basin area when the screen becomes 100% clogged. The CPS unit shall be bolted to the catch basin walls.

02.01.02 The CPS shall be configured with deflector plates or screens preventing trash from falling between the screen and connector pipe. The deflector plate shall be designed to withstand a vertical load.

02.01.03 The gap at the bottom, sides, and joints of the CPS unit shall not exceed 5 mm (0.197 inches).

02.01.04 The CPS shall include vertical structural stiffeners extending the full length of the screen in the form as bends in the screen itself, a bolting surface to fasten the CPS to the wall of the catch basin, and support for the upper portion of the CPS unit referred to as the “bypass.”

02.01.05 All parts/components of the CPS unit must be sized to fit through the catch basin’s manhole opening.

02.01.06 The CPS frame shall be fabricated from 304 stainless steel.

02.01.07 The CPS screen shall be fabricated from perforated 304 stainless steel. The screen shall have a minimum thickness of 16 gauge. The geometrical opening shape shall have a diameter of 5 mm (0.197 inches).

02.01.08 The screen material used shall have at least 45% open area.

02.01.09 Any edge of the CPS that is not flush with the wall or floor of the catch basin shall be smooth with no prongs or jagged edges.

02.01.10 The assembly bolts, screws, nuts, and washers shall be fabricated entirely from 316 stainless steel. The concrete anchor bolts shall use a wedge anchor, with Type 316 stainless steel threaded rods, nuts, and washers.

PART 3 – PERFORMANCE

03.01.00 General

03.01.01 Function - The CPS has no moving internal components and functions based on gravity flow, unless otherwise specified. Stormwater runoff enters the catch basin through a curb opening and flows toward the connector pipe. The CPS is placed to intercept flows prior to exiting the catch basin through the connector pipe. The CPS must be able to be removed through the catch basin opening. Stormwater flow up to the peak treatment rate is processed through the screen. Flows in excess of the peak treatment rate will overtop the screen in a bypass. The lid (when required) shall be place high enough above the screen to allow for full bypass flow.

03.01.02 Pollutants - The CPS will remove and retain trash and debris larger than 5 mm in diameter entering the catch basin during frequent storm events and specified flow rates.

03.01.03 Treatment Flow Rate - The CPS operates through gravity flow. The CPS is to be sized so the screen is capable of passing the calculated project specific water quality flow rate per local standards. All treatment flow rates must include a 50% screen clogging factor.

03.01.04 Bypass Flow Rate – The CPS is designed to fit within the catch basin in a way not to affect the existing hydraulics and treat or bypass all flows. The bypass must be sized with a surface area greater than the outlet pipe size, thus the CPS shall not be a critical point of flow restriction.

PART 4 - EXECUTION

04.01.00 General

The installation and use of the CPS shall conform to all applicable national, state, municipal and local specifications.

04.02.00 Installation

The contractor shall furnish all labor, equipment, materials and incidentals required to install the CPS device(s) and appurtenances in accordance with the drawings, installation manual, and these specifications, and be inspected and approved by the local governing agency. Any damage to catch basin and surrounding infrastructure caused by the installation of the CPS is the responsibility of the installation contractor.

04.02.01 CPS and all components or accessories shall be inserted through the catch basin and properly secured per manufactures installation manual and these specifications.

04.03.00 Shipping, Storage and Handling

04.03.01 Shipping – CPS shall be shipped to the contractor's address and is the responsibility of the contractor to transport the unit(s) to the exact site of installation.

04.03.02 Storage and Handling– The contractor shall exercise care in the storage and handling of the CPS(s) and its components prior to and during installation. Any repair or replacement costs associated with events occurring after delivery is accepted, and unloading has commenced shall be born by the contractor. The CPS(s) and its components shall always be stored indoors and transported inside the original shipping container(s) until the CPS(s) are ready to be installed. The CPS shall always be handled with care and lifted according to OSHA and NIOSA lifting recommendations and/or contractor's workplace safety professional recommendations.

04.04.00 Maintenance and Inspection

04.04.01 Inspection – After installation, the contractor shall demonstrate that the CPS has been properly installed at the correct location(s), elevations, and with appropriate supports and fasteners. All components associated with the CPS and its installation shall be subject to inspection by the engineer of work, governing agency, and the manufacture at the place of installation. In addition, the contractor shall demonstrate that the CPS has been installed per the manufacturer's specifications and recommendations. CPS(s) shall be physically inspected regularly in accordance to owner's Stormwater Pollution Prevention Plans (SWPPP) and manufacture's recommendations. An inspection record shall be kept by the inspection operator. The record shall include the condition of the CPS and its appurtenances. The most current copy of the inspection record shall always be copied and placed in the owner's SWPPP.

04.04.02 Maintenance – The maintenance shall be performed by someone qualified. A Maintenance Manual is available upon request from the manufacturer. The

manual has detailed information regarding the maintenance of the CPS(s). A detailed Maintenance Record shall be kept by the maintenance operator. The Maintenance Record shall include any maintenance activities preformed, amount and description of debris collected, and the condition of the CPS. The most current copy of the Maintenance Record shall always be copied and placed in the owner's Stormwater Pollution Prevention Plan (SWPPP) per governing agency. Upon cleaning: no trash or debris shall be located in the catch basin, on top of the bypass lid, or between the screen; no vegetation shall block the catch basin opening or connector pipe; and no trash or debris shall be located within the catch basin opening.

04.04.03 Material Disposal - All debris, trash, organics, and sediments captured and removed from the CPS shall be transported and disposed of at an approved facility for disposal in accordance with local and state regulations. Please refer to state and local regulations for the proper disposal of toxic and non-toxic material.

PART 5 – QUALITY ASSURANCE

05.01.00 Warranty

The manufacturer shall guarantee the CPS against all manufacturing defects in materials and workmanship for a period of (3) years from the date of delivery to the contractor. The manufacturer shall be notified of repair or replacement issues in writing within the warranty period. The CPS is limited to recommended application for which it was designed.

[End of This Section]

Attachment D : Geotechnical Report

NorCal Engineering

Soils and Geotechnical Consultants
10641 Humbolt Street Los Alamitos, CA 90720
(562) 799-9469 Fax (562) 799-9459

January 30, 2025 Project Number 25024-24

Storm Properties, Inc.
970 W. 190th Street, Suite 995
Torrance, California 90502

Attn.: Mr. Bryan Leon

RE: **Storm Water Infiltration Assessment** - Proposed Residential Development - Located at 4320 W. 1st Street and 201 S. Mountain View Street, in the City of Santa Ana, California

Dear Mr. Leon:
Pursuant to your request, this firm has provided our professional opinion regarding the use of a storm water infiltration system at the above referenced project. Review of our *Geotechnical Engineering Investigation* report dated January 8, 2025; the subject site is situated within an area of high liquefaction potential with groundwater encountered at a depth of 9 and 10 feet beneath existing ground surface.

The site is expected to experience ground shaking and earthquake activity that is typical of Southern California area. It is during severe ground shaking that loose, granular soils below the groundwater table can liquefy. The results of our analysis indicates the liquefaction potential at this site to be high based upon the historic groundwater depth and a Peak Ground Acceleration (PGA_M) of 0.622g. The associated seismic-induced settlements would be on the order of 3.875 inches and would occur rather uniformly across the site. Differential settlements would be on the order of 2 inches over a 50-foot (horizontal) distance.

It is our recommendation that these geotechnical conditions present very unfavorable conditions to install a storm water infiltration system for the proposed residential development. It is recommended that an alternate means of storing and disposing of stormwater be evaluated by the project civil engineer.

Respectfully submitted,
NORCAL ENGINEERING

Keith D. Tucker
Project Engineer
R.G.E. 841

REGISTERED PROFESSIONAL ENGINEER
KEITH D. TUCKER
No. 841
Exp. 12/31/2026
GEOTECHNICAL
STATE OF CALIFORNIA

Scott D. Spensiero
Project Manager

Geotechnical Engineering Investigation
Proposed Residential Development
4320 W. 1st Street & 201 S. Mountain View Street
Santa Ana, California

Storm Properties, Inc.
970 W. 190th Street, Suite 995
Torrance, CA 90502

Attn: Mr. Bryan Leon

Project Number 25024-24
January 8, 2025

NorCal Engineering

TABLE OF CONTENTS

Section		Page
1.0	**Project Description**	1
2.0	**Site Description**	2
3.0	**Site Exploration**	2
4.0	**Laboratory Tests**	3
4.1	Field Moisture Content	3
4.2	Sieve Analyses	3
4.3	Maximum Density Tests	3
4.4	Expansion Index Tests	3
4.5	Atterberg Limits	3
4.6	Corrosion Tests	3
4.7	Direct Shear Tests	4
4.8	Consolidation Tests	4
5.0	**Seismicity Evaluation**	4
6.0	**Liquefaction Evaluation**	5
7.0	**Infiltration Characteristics**	6
8.0	**Conclusions and Recommendations**	7
8.1	Site Grading Recommendations	8
8.2	Shrinkage and Subsidence	9
8.3	Temporary Excavations	10
8.4	Foundation Design	10
8.5	Settlement Analysis	10
8.6	Lateral Resistance	11
8.7	Retaining Wall Design Parameters	11
8.8	Slab Design	12
8.9	Utility Trench and Excavation Backfill	12
8.10	Corrosion Design Criteria	13
8.11	Expansive Soil	13
9.0	**Closure**	13

NorCal Engineering

Soils and Geotechnical Consultants
10641 Humbolt Street Los Alamitos, CA 90720
(562) 799-9469

January 8, 2025 Project Number 25024-24

Storm Properties, Inc.
970 W. 190th Street, Suite 995
Torrance, California 90502

Attn.: Mr. Bryan Leon

RE: **Geotechnical Engineering Investigation** - Proposed Residential Development - Located at 4320 W. 1st Street and 201 S. Mountain View Street, in the City of Santa Ana, California

Dear Mr. Leon:

Pursuant to your request, this firm has performed a Geotechnical Engineering Investigation for the above referenced project in accordance with your approval of our proposal dated October 25, 2024. The purpose of this investigation is to evaluate the geotechnical conditions of the subject site and to provide recommendations for the proposed residential development. The scope of work included the following: 1) site reconnaissance; 2) subsurface geotechnical exploration and sampling; 3) soil infiltration study; 4) laboratory testing; 5) engineering analysis of field and laboratory data; and 6) preparation of a geotechnical engineering report.

1.0 Project Description

It is proposed to construct a 54-unit residential development as shown on the attached Site Plan. These two and/or three-story structures will be supported by a conventional slab-on-grade foundation system with perimeter-spread footings and isolated interior footings. Other improvements will consist of asphalt and/or concrete pavement, hardscape and landscaping. It is assumed that the proposed grading for the development will include cuts on the order of a few feet with minor fill procedures on to achieve finished grade elevations. Final building plans shall be reviewed by this firm prior to submittal for city approval to determine the need for any additional study and revised recommendations pertinent to the proposed development, if necessary.

2.0 Site Description

The 275' x 385' subject property is located at the southeast corner of First Street and Mountain View Street, in the City of Santa Ana. The generally rectangular-shaped parcel is elongated in a north to south direction with topography of the relatively level property descending slightly from back to front on the order of a few feet. The site is currently occupied by a masonry block building situated toward the back portion of the lot and surrounding concrete pavement for the parking of food trucks and employee vehicles.

3.0 Site Exploration

The investigation consisted of the placement of eight (8) subsurface exploratory borings by a truck mounted hollow stem to depths ranging between 5 and 50 feet below current ground elevations. The explorations were visually classified and logged by a field engineer with locations of the subsurface explorations shown on the attached Site Plan. The field explorations revealed the existing earth materials to consist of fill and alluvium soil. Detailed descriptions of the subsurface conditions are listed on the boring logs in Appendix A. It should be noted that the transition from one soil type to another as shown on the boring logs is approximate and may in fact be a gradual transition. The soils encountered are described as follows:

Fill: A fill soil classifying as a brown, fine to medium grained, silty SAND with occasional gravel was encountered to depths ranging from 1.5 to 3 feet below ground surface. These soils were noted to be dense and moist.

Alluvium: An undisturbed natural soil classifying as a brown fine to medium grained, silty SAND to a light brown, fine to medium grained SAND was encountered beneath the fill soils. These soils were observed to be medium dense and damp to wet. Deeper soils consisted of sandy silts to silty sands and sands which were noted to be medium stiff/dense to dense and wet.

The overall engineering characteristics of the earth material were relatively uniform with each excavation. Groundwater was encountered at a depth of 9 and 10 feet below existing ground surface and some caving occurred in the deeper cohesionless soils below groundwater.

4.0 Laboratory Tests

Relatively undisturbed samples of the subsurface soils were obtained to perform laboratory testing and analysis for direct shear, consolidation tests, and to determine in-place moisture/densities. These relatively undisturbed ring samples were obtained by driving a thin-walled steel sampler lined with one-inch long brass rings with an inside diameter of 2.42 inches into the undisturbed soils. Bulk bag samples were obtained in the upper soils for expansion index tests and maximum density tests.

Standard penetration tests were obtained by driving a steel sampler unlined with an inside diameter of 1.5 inches into the soils. This standard penetrometer sampler was driven a total of eighteen inches with blow counts tallied every six inches. Blow count data is given on the Boring Logs in Appendix A. All test results are included in Appendix B, unless otherwise noted.

4.1 **Field Moisture Content** (ASTM: D 2216) and the dry density of the ring samples were determined in the laboratory. This data is listed on the logs of explorations.

4.2 **Sieve analyses** (ASTM: D 422-63) and the percent by weight of soil finer than the No. 200 sieve (ASTM: 1140) were performed on selected soil samples. These results are shown later within the body of this report.

4.3 **Maximum Density tests** (ASTM: D 1557) were performed on typical samples of the upper soils. Results of these tests are shown on Table I.

4.4 **Expansion Index tests** (ASTM: D 4829) were performed on remolded samples of the upper soils to determine expansive characteristics. Results of these tests are provided on Table II.

4.5 **Atterberg Limits** (ASTM: D 4318) consisting of liquid limit, plastic limit and plasticity index were performed on representative soil samples. Results are shown on Table III.

4.6 **Corrosion tests** consisting of sulfate, pH, resistivity and chloride analysis to determine potential corrosive effects of soils on concrete and underground utilities. Test results are provided on Table IV.

4.7 **Direct Shear tests** (ASTM: D 3080) were performed on undisturbed and/or remolded samples of the subsurface soils. The test is performed under saturated conditions at loads of 1,000 lbs./sq.ft., 2,000 lbs./sq.ft., and 3,000 lbs./sq.ft. with results shown on Plate A.

4.8 **Consolidation tests** (ASTM: D 2435) were performed on undisturbed samples to determine the differential and total settlement which may be anticipated based upon the proposed loads. Water was added to the samples at a surcharge of one KSF and the settlement curves are plotted on Plates B to E.

5.0 Seismicity Evaluation

The proposed development lies outside of any Alquist Priolo Special Studies Zone and the potential for damage due to direct fault rupture is considered unlikely. The Newport-Inglewood fault is located about 10 kilometers from the site and is capable of producing a Magnitude 6.9 earthquake. Ground shaking originating from earthquakes along other active faults in the region is expected to induce lower horizontal accelerations due to smaller anticipated earthquakes and/or greater distances to other faults. The mapped seismic design acceleration parameters for the project site in accordance with the 2022 California Building Code (CBC) are provided below and based on the ASCE/SEI 7-16 American Society of Civil Engineers (ASCE) website, https://asce7hazardtool.online/

2022 CBC Seismic Design Acceleration Parameters

Latitude	33.745
Longitude	-117.926
Site Class	D
Risk Category	II
Mapped Spectral Response Acceleration	S_S = 1.325 S_1 = 0.472
Adjusted Maximum Acceleration	S_{MS} = 1.325
Design Spectral Response Acceleration Parameters	S_{DS} = 0.883
Peak Ground Acceleration	PGA_M = 0.622

Use of these values is dependent on requirements of Section 11-4.8, ASCE 7-16, Supplement 3 that requires the value of the seismic response coefficient C_s be determined by Equation 12.8.2 for values of $T \leq 1.5T_s$ and taken as equal to 1.5 times the value computed in accordance with either 12.8-3 for $T_L \geq T \geq 1.5T_s$ or Equation 12.8-4 for $T > T_L$. Computations and verification of these conditions is referred to the structural engineer.

6.0 Liquefaction Evaluation

The site is expected to experience ground shaking and earthquake activity that is typical of Southern California area. It is during severe ground shaking that loose, granular soils below the groundwater table can liquefy. A review of the exploratory boring log and the laboratory test results on selected soil samples obtained indicate the following soil classifications, field blowcounts and amounts of fines passing through the No. 200 sieve.

Field Blowcount and Gradation Data

Boring No.	Classification	Blowcounts (blows/ft)	Relative Density	% Passing No. 200 Sieve
B-3 @ 5'	SW	12	Dense	3
B-3 @ 10'	ML	6	Medium Stiff	60
B-3 @ 15'	ML	10	Medium Stiff	50
B-3 @ 20'	SW	13	Dense	10
B-3 @ 25'	SW	17	Dense	4
B-3 @ 30'	SW	20	Dense	6
B-3 @ 35'	SM	26	Very Dense	24
B-3 @ 40'	SM	31	Very Dense	25
B-3 @ 45'	SM	30	Very Dense	18
B-3 @ 50'	SM	35	Very Dense	15

Based upon information in the California Division of Mines and Geology "Seismic Hazard Zone Map – Newport Beach Quadrangle", dated April 15, 1997, the subject site is situated in an area of historic occurrence of liquefaction, or local geological, geotechnical and groundwater conditions to indicate a potential for permanent ground displacement. Our liquefaction evaluation utilized the nearest mode of predominate Magnitude 6.9 Mw earthquake. Review of the *California Department of Conservation – Division of Mines and Geology Open File Report 97-08, Plate 1.2,* indicates a *historic* high groundwater level less than 10 feet below ground surface.

The results of our analysis indicates the liquefaction potential at this site to be high based upon the historic groundwater depth and a Peak Ground Acceleration (PGA_M) of 0.622g. The associated seismic-induced settlements would be on the order of 3.875 inches and would occur rather uniformly across the site. Differential settlements would be on the order of 2 inches over a 50-foot (horizontal) distance. Our seismic settlement calculations are included in Appendix C.

It is recommended that a stiffened foundation system be utilized for the proposed structure to mitigate for the seismic-induced settlements. The stiffened system shall consist of either a post-tensioned slab design, mat foundation or a system of grade beams connecting the foundations in two directions throughout the new structure.

7.0 Infiltration Characteristics

Infiltration tests were performed in accordance with the Orange County Technical Guidance Document (OCTGD) Appendix VII – Infiltration Rate Evaluation Protocol and Factor of Safety Recommendations dated December 20, 2013.

A truck mounted Simco 2800 Drill Rig equipped with a hollow stem auger was used to excavate the exploratory borings to depths of 3 and 5 below existing ground surface. The borings consisted of six-inch diameter test holes. A three-inch diameter perforated PVC casing with solid end cap was installed in the borings and then surrounded with gravel materials to prevent caving. The infiltration holes were carefully filled with clean water and refilled after two initial readings.

Based upon the initial rates of infiltration at each location, test measurements were measured at selected maximum intervals thereafter. Measurements were obtained by using an electronic tape measure with 1/16-inch divisions and timed with a stopwatch.

The subsurface soils exhibit the following field infiltration rates which do not include a factor of safety. The drainage disposal system shall also incorporate the safety factor required by the county standard. Calculations are based using the Porchet Method (aka Inverse Borehole Method) and are provided in Appendix D.

Boring/Test No.	Depth	Soil Classification	Field Infiltration Rate
B-1/TH-1	5'	SAND	37.5 in/hr
B-2/TH-2	3'	SAND	75 in/hr

Based upon the presence of shallow groundwater at a depth of 9 and 10 feet below ground surface, the infiltration of stormwater into the subsurface soils is deemed not feasible. In addition, the site was calculated with moderate to high liquefaction potential. It is recommended that an alternate means of storing and disposing of stormwater be evaluated by the project civil engineer. All systems must meet the latest city and/or county specifications and the California Regional Water Quality Control Board (CRWQCB) requirements.

It is recommended that foundations shall be setback a minimum distance of 10 feet from the drainage disposal system and the bottom of footing shall be a minimum of 10 feet from the expected zone of saturation. The boundary of the zone of saturation may be assumed to project downward from the top of the permeable portion of the disposal system at an inclination of 1 to 1 or flatter, as determined by the geotechnical engineer.

8.0 Conclusions and Recommendations

Based upon our evaluations, the proposed development is acceptable from a geotechnical engineering standpoint. By following the recommendations and guidelines set forth in our report, the structures will be safe from excessive settlements under the anticipated design loadings and conditions. The proposed development shall meet all requirements of the City Building Ordinance and will not impose any adverse effect on existing adjacent structures.

The following recommendations are based upon soil conditions encountered in our field investigation; these near-surface soil conditions could vary across the site. Variations in the soil conditions may not become evident until the commencement of grading operations for the proposed development and revised recommendations from the geotechnical engineer may be necessary based upon the conditions encountered.

It is recommended that site inspections be performed by a representative of this firm during all grading and construction of the development to verify the findings and recommendations documented in this report. Any unusual conditions which may be encountered in the course of the project development may require the need for additional study and revised recommendations.

8.1 Site Grading Recommendations

Any vegetation and/or demolition debris shall be removed and hauled from proposed grading areas prior to the start of grading operations. Existing vegetation shall not be mixed or disced into the soils. Any removed soils may be reutilized as compacted fill once any deleterious material or oversized materials (in excess of eight inches) is removed. Grading operations shall be performed in accordance with the attached *Specifications for Placement of Compacted Fill.*

All disturbed soils and/or fill (about 1.5 to 3 feet below ground surface) shall be removed to competent alluvium, the exposed surface scarified to a depth of 12 inches, brought to within 2% of optimum moisture content and compacted to a minimum of 90% of the laboratory standard (ASTM: D 1557) prior to placement of any additional compacted fill soils, foundations, slabs-on-grade and pavement. Grading shall extend a minimum of five horizontal feet outside the edges of foundations or equidistant to the depth of fill placed, whichever is greater.

Due to the potential for differential settlement of foundations placed on compacted fill and alluvium, it is recommended that building foundations including floor slab areas be underlain by a uniform compacted fill blanket at least two feet in thickness. This fill blanket shall extend a minimum of five horizontal feet outside the edges of foundations or equidistant to the depth of fill placed, whichever is greater.

Since deeper subsurface soils were noted to be excessive in moisture, soil stabilization may be required at the bottom of the building pad overexcavation. These soils may need the placement of an approved geofabric (Mirafi 600x or equivalent) and layer of approved gravel to stabilize the native soils prior to placement of engineered fill.

It is possible that isolated areas of undiscovered fill not described in this report are present on site; if found, these areas should be treated as discussed earlier. A diligent search shall also be conducted during grading operations in an effort to uncover any underground structures, irrigation or utility lines. If encountered, these structures and lines shall be either removed or properly abandoned prior to the proposed construction.

Any imported fill material should be preferably soil similar to the upper soils encountered at the subject site. All soils shall be approved by this firm prior to importing at the site and will be subjected to additional laboratory testing to assure concurrence with the recommendations stated in this report.

Care should be taken to provide or maintain adequate lateral support for all adjacent improvements and structures at all times during the grading operations and construction phase. Adequate drainage away from the structures, pavement and slopes should be provided at all times.

8.2 Shrinkage and Subsidence

Results of our in-place density tests reveal that the soil shrinkage will be on the order of 15 to 20% due to excavation and recompaction, based upon the assumption that the fill is compacted to 92% of the maximum dry density per ASTM standards. Subsidence should be 0.2 feet die to earthwork operations. The volume change does not include any allowance for vegetation or organic stripping, removal of subsurface improvements, or topographic approximations.

Although these values are only approximate, they represent our best estimate of lost yardage, which will likely occur during grading. If more accurate shrinkage and subsidence factors are needed, it is recommended that field testing the actual equipment and grading techniques should be conducted.

8.3 **Temporary Excavations**

Temporary unsurcharged excavations in the existing site materials may be made at vertical inclinations up to 4 feet in height unless cohesionless soils are encountered. In areas where soils with little or no binder are encountered, where adverse geological conditions are exposed, or where excavations are adjacent to existing structures, shoring or flatter excavations may be required. Additional recommendations regarding specific excavations may be provided once typical detail sections are made available.

The temporary cut slope gradients given above do not preclude local raveling and sloughing. All excavations shall be made in accordance with the requirements of the soils engineer, CAL-OSHA and other public agencies having jurisdiction. Care should be taken to provide or maintain adequate lateral support for all adjacent improvements and structures at all times during the grading operations and construction phase.

8.4 **Foundation Design**

All foundations may be designed utilizing an allowable bearing capacity of 2,000 psf for an embedded depth of 18 and 24 inches into approved engineered fill for two and three-story structures, respectively. The bearing value may be increased by 500 psf for each additional foot of depth in excess of the 18 and 24-inch minimum depth, up to a maximum of 3,500 psf. A one-third increase may be used when considering short-term loading and seismic forces. Any foundations located along property line or where lateral overexcavation is not possible may utilize an allowable bearing capacity of 1,500 psf and embedded into competent native soils. A representative of this firm shall inspect all foundation excavations prior to pouring concrete.

8.5 **Settlement Analysis**

Resultant pressure curves for the consolidation tests are shown on Plates B to E. Computations utilizing these curves and the recommended allowable soil bearing capacities reveal that the foundations will experience settlements on the order of ¾ inch and differential settlements of less than ¼ inch.

8.6 **Lateral Resistance**

The following values may be utilized in resisting lateral loads imposed on the structure. Requirements of the California Building Code should be adhered to when the coefficient of friction and passive pressures are combined.

Coefficient of Friction - 0.40

Equivalent Passive Fluid Pressure = 250 lbs./cu.ft.

Maximum Passive Pressure = 2,500 lbs./cu.ft.

The passive pressure recommendations are valid only for approved compacted fill soils or competent native materials.

8.7 **Retaining Wall Design Parameters**

Active earth pressures against retaining walls will be equal to the pressures developed by the following fluid densities. These values are for **approved granular backfill material** placed behind the walls at various ground slopes above the walls.

Surface Slope of Retained Materials (Horizontal to Vertical	Equivalent Fluid Density (lb./cu.ft.)
Level	30
5 to 1	35
4 to 1	38
3 to 1	40
2 to 1	45

Any applicable short-term construction surcharges and seismic forces should be added to the above lateral pressure values. An equivalent fluid pressure of 45 pcf may be utilized for the restrained wall condition with a level grade behind the wall.

The seismic-induced lateral soil pressure for walls greater than 6 feet may be computed using a triangular pressure distribution with the maximum value at the top of the wall. The maximum lateral pressure of (20 pcf) H where H is the height of the retained soils above the wall footing should be used in final design of retaining walls. Sliding resistance values and passive fluid pressure values may be increased by 1/3 during short-term wind and seismic loading conditions.

All walls shall be waterproofed as needed and protected from hydrostatic pressure by a reliable permanent subdrain system. The granular backfill to be utilized immediately adjacent to retaining walls shall consist of an approved select granular soil with a sand equivalency greater than 30. This backfill zone of free draining material shall consist of a wedge beginning a minimum of one horizontal foot from the base of the wall extending upward at an inclination of no less than ¾ to 1 (horizontal to vertical).

8.8 Slab Design

All concrete slabs including hardscape shall be a minimum of four inches in thickness and placed on approved subgrade soils. Any concrete slab-on-grade used for street pavement areas shall be a minimum of six inches in thickness and placed on approved subgrade soils. A vapor retarder (10-mil minimum thickness) should be utilized in areas which would be sensitive to the infiltration of moisture. This retarder shall meet requirements of ASTM E 96, *Water Vapor Transmission of Materials* and ASTM E 1745, *Standard Specification for Water Vapor Retarders used in Contact with Soil or Granular Fill Under Concrete Slabs.* The vapor retarder shall be installed in accordance with procedures stated in ASTM E 1643, *Standard practice for Installation of Water Vapor Retarders used in Contact with Earth or Granular Fill Under Concrete Slabs.*

The moisture retarder may be placed directly upon compacted subgrade soils conditioned to near optimum moisture levels, although one to two inches of sand beneath the membrane is desirable. The subgrade upon which the retarder is placed shall be smooth and free of rocks, gravel or other protrusions which may damage the retarder. Use of sand above the retarder is under the purview of the structural engineer; if sand is used over the retarder, it should be placed in a dry condition.

8.9 Utility Trench and Excavation Backfill

Trenches from installation of utility lines and other excavations may be backfilled with on-site soils or approved imported soils compacted to a minimum of 90% relative compaction. All utility lines shall be properly bedded with clean sand having a sand equivalency rating of 30 or more. This bedding material shall be thoroughly water jetted around the pipe structure prior to placement of compacted backfill soils.

8.10 Corrosion Design Criteria

Representative samples of the surficial soils, typical of the subgrade soils expected to be encountered within foundation excavations and underground utilities were tested for corrosion potential. The minimum resistivity value obtained for the samples tested is representative of an environment that may be severely corrosive to metals. The soil pH value was considered mildly acidic and may not have a significant effect on soil corrosivity. Consideration should be given to corrosion protection systems for buried metal such as protective coatings, wrappings or the use of PVC where permitted by local building codes.

According to Table 4.3.1 of ACI 318 Building Code and Commentary, these contents revealed negligible sulfate concentrations. Therefore, a Type II cement according to latest CBC specifications may be utilized for building foundations at this time. It is recommended that additional sulfate tests be performed at the completion of site grading to assure that the as graded conditions are consistent with the recommendations stated in this design. Corrosion test results may be found on the attached Table IV.

8.11 Expansive Soil

If expansive soils are encountered, special attention should be given to the project design and maintenance. The attached *Expansive Soil Guidelines* should be reviewed by the engineers, architects, owner, maintenance personnel and other interested parties and considered during the design of the project and future property maintenance.

9.0 Closure

The recommendations and conclusions contained in this report are based upon the soil conditions uncovered in our test excavations. No warranty of the soil condition between our excavations is implied. NorCal Engineering should be notified for possible further recommendations if unexpected to unfavorable conditions are encountered during construction phase. It is the responsibility of the owner to ensure that all information within this report is submitted to the Architect and appropriate Engineers for the project.

A preconstruction conference should be held between the general contractor, grading contractor, city inspector, architect, and geotechnical engineer to clarify any questions relating to the grading operations and subsequent construction. Our representative should be present during the grading operations and construction phase to certify that such recommendations are complied within the field.

This geotechnical investigation has been conducted in a manner consistent with the level of care and skill exercised by members of our profession currently practicing under similar conditions in the Southern California area. No other warranty, expressed or implied is made.

We appreciate this opportunity to be of service to you. If you have any further questions, please do not hesitate to contact the undersigned.

Respectfully submitted,
NORCAL ENGINEERING

Keith D. Tucker
Project Engineer
R.G.E. 841

REGISTERED PROFESSIONAL ENGINEER
KEITH D. TUCKER
No. 841
Exp. 12/31/2027
GEOTECHNICAL
STATE OF CALIFORNIA

Scott D. Spensiero
Project Manager

References

1. American Society of Civil Engineers (ASCE) website, https://asce7hazardtool.online/

2. California Building Code, 2022.

3. California Department of Conservation, California Geological Survey, 2007, Fault-Rupture Hazard Zones in California; Special Publication 42.

4. California Department of Water Resources, Internet Website, http://www.water.ca.gov/waterdatalibrary/index.cfm.

5. California Division of Mines and Geology, 1997, Seismic Hazard Zone for Newport Beach 7.5-Minute Quadrangle, Orange County, California

6. California Division of Mines and Geology, 2008, Guidelines for Evaluating and Mitigating Seismic Hazards in California: Special Publication 117A.

7. Earthquake Zones of Required Investigation, Seismic Hazard Zones, Newport Beach Quadrangle, published by the California Geological Survey.

8. Proceeding of the NCEER Workshop on Evaluation of Liquefaction Resistance of Soils, Edited by T.L Youd and I.M. Idriss, December 31, 1997

9. Orange County Technical Guidance Document (OCTGD) Appendix VII – Infiltration Rate Evaluation Protocol and Factor of Safety Recommendations dated December 20, 2013.

10. Southern California Earthquake Center - Recommended Procedures for Implementation of DMG Special Report, 117 Guidelines for Analyzing and Mitigating Liquefaction in California, March 1999.

SPECIFICATIONS FOR PLACEMENT OF COMPACTED FILL

Excavation

Any existing low-density soils and/or saturated soils shall be removed to competent natural soil under the inspection of the Geotechnical Engineering Firm. After the exposed surface has been cleansed of debris and/or vegetation, it shall be scarified until it is uniform in consistency, brought to the proper moisture content and compacted to a minimum of 90% relative compaction (in accordance with ASTM: D 1557).

In any area where a transition between fill and native soil or between bedrock and soil are encountered, additional excavation beneath foundations and slabs will be necessary in order to provide uniform support and avoid differential settlement of the structure.

Material for Fill

The on-site soils or approved import soils may be utilized for the compacted fill provided they are free of any deleterious materials and shall not contain any rocks, brick, asphaltic concrete, concrete or other hard materials greater than eight inches in maximum dimensions. Any import soil must be approved by the Geotechnical Engineering firm a minimum of 72 hours prior to importation of site.

Placement of Compacted Fill Soils

The approved fill soils shall be placed in layers not excess of six inches in thickness. Each lift shall be uniform in thickness and thoroughly blended. The fill soils shall be brought to within 2% of the optimum moisture content, unless otherwise specified by the Soils Engineering firm. Each lift shall be compacted to a minimum of 90% relative compaction (in accordance with ASTM: D 1557) and approved prior to the placement of the next layer of soil. Compaction tests shall be obtained at the discretion of the Geotechnical Engineering firm but to a minimum of one test for every 500 cubic yards placed and/or for every 2 feet of compacted fill placed.

The minimum relative compaction shall be obtained in accordance with accepted methods in the construction industry. The final grade of the structural areas shall be in a dense and smooth condition prior to placement of slabs-on-grade or pavement areas. No fill soils shall be placed, spread or compacted during unfavorable weather conditions. When the grading is interrupted by heavy rains, compaction operations shall not be resumed until approved by the Geotechnical Engineering firm.

Grading Observations

The controlling governmental agencies should be notified prior to commencement of any grading operations. This firm recommends that the grading operations be conducted under the observation of a Soils Engineering firm as deemed necessary. A 24-hour notice must be provided to this firm prior to the time of our initial inspection.

Observation shall include the clearing and grubbing operations to assure that all unsuitable materials have been properly removed; approve the exposed subgrade in areas to receive fill and in areas where excavation has resulted in the desired finished grade and designate areas of overexcavation; and perform field compaction tests to determine relative compaction achieved during fill placement. In addition, all foundation excavations shall be observed by the Geotechnical Engineering firm to confirm that appropriate bearing materials are present at the design grades and recommend any modifications to construct footings.

EXPANSIVE SOIL GUIDELINES

The following expansive soil guidelines are provided for your project. The intent of these guidelines is to inform you, the client, of the importance of proper design and maintenance of projects supported on expansive soils. ***You, as the owner or other interested party, should be warned that you have a duty to provide the information contained in the soil report including these guidelines to your design engineers, architects, landscapers and other design parties in order to enable them to provide a design that takes into consideration expansive soils.***

In addition, you should provide the soil report with these guidelines to any property manager, lessee, property purchaser or other interested party that will have or assume the responsibility of maintaining the development in the future.

Expansive soils are fine-grained silts and clays which are subject to swelling and contracting. The amount of this swelling and contracting is subject to the amount of fine-grained clay materials present in the soils and the amount of moisture either introduced or extracted from the soils. Expansive soils are divided into five categories ranging from "very low" to "very high". Expansion indices are assigned to each classification and are included in the laboratory testing section of this report. *If the expansion index of the soils on your site, as stated in this report, is 21 or higher, you have expansive soils.* The classifications of expansive soils are as follows:

Classification of Expansive Soil*

Expansion Index	Potential Expansion
0-20	Very Low
21-50	Low
51-90	Medium
91-130	High
Above 130	Very High

*From Table 18A-I-B of California Building Code (1988)

When expansive soils are compacted during site grading operations, care is taken to place the materials at or slightly above optimum moisture levels and perform proper compaction operations. Any subsequent excessive wetting and/or drying of expansive soils will cause the soil materials to expand and/or contract. These actions are likely to cause distress of foundations, structures, slabs-on-grade, sidewalks and pavement over the life of the structure. ***It is therefore imperative that even after construction of improvements, the moisture contents are maintained at relatively constant levels, allowing neither excessive wetting or drying of soils.***

Evidence of excessive wetting of expansive soils may be seen in concrete slabs, both interior and exterior. Slabs may lift at construction joints producing a trip hazard or may crack from the pressure of soil expansion. Wet clays in foundation areas may result in lifting of the structure causing difficulty in the opening and closing of doors and windows, as well as cracking in exterior and interior wall surfaces. In extreme wetting of soils to depth, settlement of the structure may eventually result. Excessive wetting of soils in landscape areas adjacent to concrete or asphaltic pavement areas may also result in expansion of soils beneath pavement and resultant distress to the pavement surface.

Excessive drying of expansive soils is initially evidenced by cracking in the surface of the soils due to contraction. Settlement of structures and on-grade slabs may also eventually result along with problems in the operation of doors and windows.

Projects located in areas of expansive clay soils will be subject to more movement and "hairline" cracking of walls and slabs than similar projects situated on non-expansive sandy soils. There are, however, measures that developers and property owners may take to reduce the amount of movement over the life the development. The following guidelines are provided to assist you in both design and maintenance of projects on expansive soils:

- Drainage away from structures and pavement is essential to prevent excessive wetting of expansive soils. Grades should be designed to the latest building code and maintained to allow flow of irrigation and rain water to approved drainage devices or to the street. Any "ponding" of water adjacent to buildings, slabs and pavement after rains is evidence of poor drainage; the installation of drainage devices or regrading of the area may be required to assure proper drainage. Installation of rain gutters is also recommended to control the introduction of moisture next to buildings. Gutters should discharge into a drainage device or onto pavement which drains to roadways.

- Irrigation should be strictly controlled around building foundations, slabs and pavement and may need to be adjusted depending upon season. This control is essential to maintain a relatively uniform moisture content in the expansive soils and to prevent swelling and contracting. Over-watering adjacent to improvements may result in damage to those improvements. NorCal Engineering makes no specific recommendations regarding landscape irrigation schedules.

- Planting schemes for landscaping around structures and pavement should be analyzed carefully. Plants (including sod) requiring high amounts of water may result in excessive wetting of soils. Trees and large shrubs may actually extract moisture from the expansive soils, thus causing contraction of the fine-grained soils.

- Thickened edges on exterior slabs will assist in keeping excessive moisture from entering directly beneath the concrete. A six-inch thick or greater deepened edge on slabs may be considered. Underlying interior and exterior slabs with 6 to 12 inches or more of non-expansive soils and providing presaturation of the underlying clayey soils as recommended in the soil report will improve the overall performance of on-grade slabs.

- Increase the amount of steel reinforcing in concrete slabs, foundations and other structures to resist the forces of expansive soils. The precise amount of reinforcing should be determined by the appropriate design engineers and/or architects.

- Recommendations of the soil report should always be followed in the development of the project. Any recommendations regarding presaturation of the upper subgrade soils in slab areas should be performed in the field and verified by the Soil Engineer.

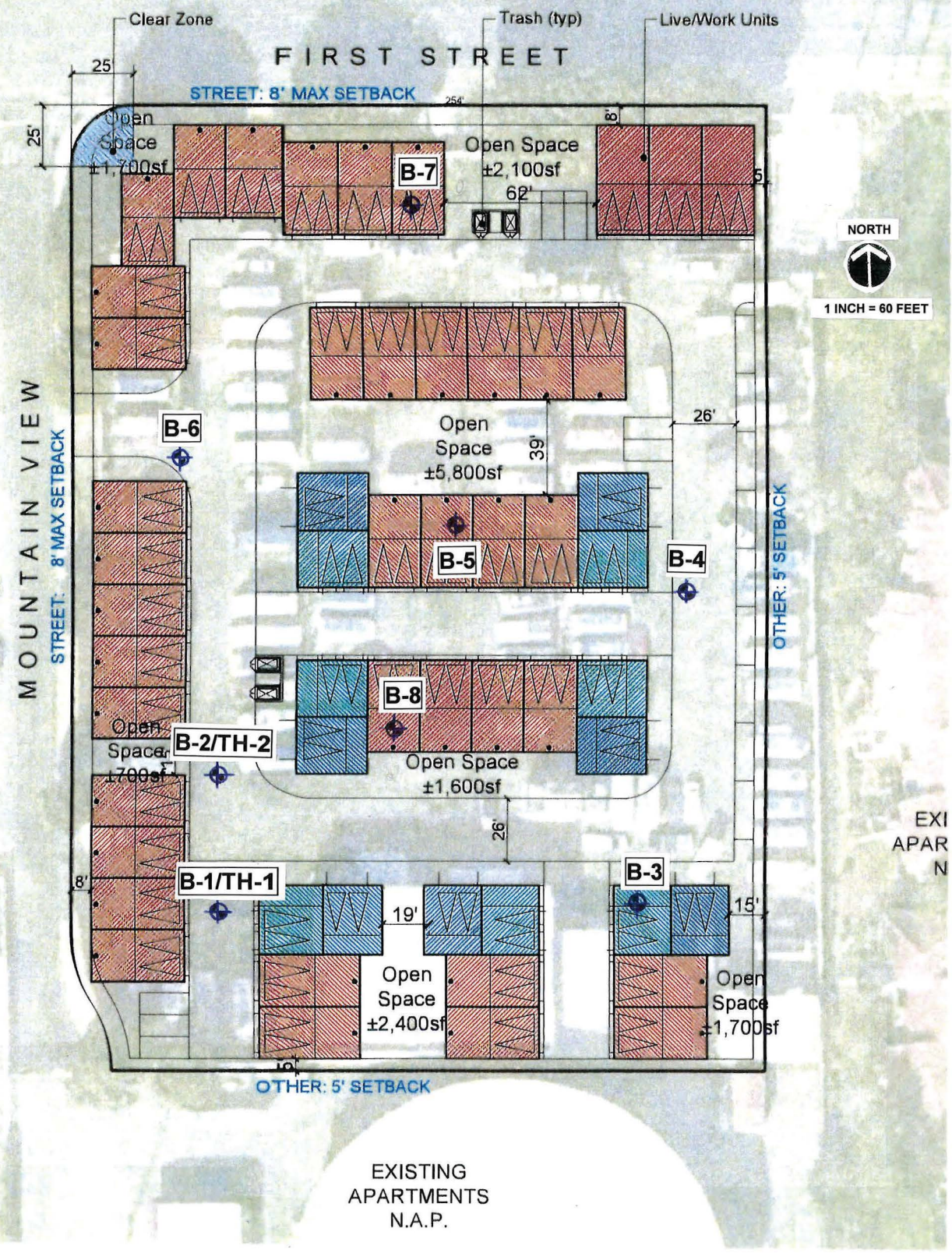

NorCal Engineering

SOILS AND GEOTECHNICAL CONSULTANTS

SITE PLAN

PROJECT	25024-24	DATE	JANUARY 2025

List of Appendices
(in order of appearance)

Appendix A – Log of Excavations

Log of Borings B-1 to B-8

Appendix B – Laboratory Tests

Table I – Maximum Dry Density
Table II – Expansion
Table III – Atterberg Limits
Table IV – Corrosion
Plate A – Direct Shear
Plates B and C - Consolidation

Appendix C – Liquefaction Analysis

ASCE Seismic Hazard Report
Seismic Hazard Zones Map
Geology Map
Liquefaction Calculations

Appendix D – Soil Infiltration Data

Field Data Sheets and Calculations

Appendix A
Log of Excavations

MAJOR DIVISION			GRAPHIC SYMBOL	LETTER SYMBOL	TYPICAL DESCRIPTIONS
COARSE GRAINED SOILS	GRAVEL AND GRAVELLY SOILS	CLEAN GRAVELS (LITTLE OR NO FINES)		GW	WELL-GRADED GRAVELS, GRAVEL, SAND MIXTURES, LITTLE OR NO FINES
				GP	POORLY-GRADED GRAVELS, GRAVEL-SAND MIXTURES, LITTLE OR NO FINES
	MORE THAN 50% OF COARSE FRACTION RETAINED ON NO. 4 SIEVE	GRAVELS WITH FINES (APPRECIABLE AMOUNT OF FINES)		GM	SILTY GRAVELS, GRAVEL-SAND-SILT MIXTURES
				GC	CLAYEY GRAVELS, GRAVEL-SAND-CLAY MIXTURES
MORE THAN 50% OF MATERIAL IS LARGER THAN NO. 200 SIEVE SIZE	SAND AND SANDY SOILS	CLEAN SAND (LITTLE OR NO FINES)		SW	WELL-GRADED SANDS, GRAVELLY SANDS, LITTLE OR NO FINES
				SP	POORLY-GRADED SANDS, GRAVELLY SANDS, LITTLE OR NO FINES
	MORE THAN 50% OF COARSE FRACTION PASSING ON NO. 4 SIEVE	SANDS WITH FINE (APPRECIABLE AMOUNT OF FINES)		SM	SILTY SANDS, SAND-SILT MIXTURES
				SC	CLAYEY SANDS, SAND-CLAY MIXTURES
FINE GRAINED SOILS	SILTS AND CLAYS	LIQUID LIMIT LESS THAN 50		ML	INORGANIC SILTS AND VERY FINE SANDS, ROCK FLOUR, SILTY OR CLAYEY FINE SANDS OR CLAYEY SILTS WITH SLIGHT PLASTICITY
				CL	INORGANIC CLAYS OF LOW TO MEDIUM PLASTICITY, GRAVELLY CLAYS, SANDY CLAYS, SILTY CLAYS, LEAN CLAYS
				OL	ORGANIC SILTS AND ORGANIC SILTY CLAYS OF LOW PLASTICITY
MORE THAN 50% OF MATERIAL IS SMALLER THAN NO. 200 SIEVE SIZE	SILTS AND CLAYS	LIQUID LIMIT GREATER THAN 50		MH	INORGANIC SILTS, MICACEOUS OR DIATOMACEOUS FINE SAND OR SILTY SOILS
				CH	INORGANIC CLAYS OF HIGH PLASTICITY, FAT CLAYS
				OH	ORGANIC CLAYS OF MEDIUM TO HIGH PLASTICITY, ORGANIC SILTS
HIGHLY ORGANIC SOILS				PT	PEAT, HUMUS, SWAMP SOILS WITH HIGH ORGANIC CONTENTS

NOTE: DUAL SYMBOLS ARE USED TO INDICATE BORDERLINE SOIL CLASSIFICATIONS

UNIFIED SOIL CLASSIFICATION SYSTEM

KEY:

- ■ Indicates 2.5-inch Inside Diameter. Ring Sample.
- ⊠ Indicates 2-inch OD Split Spoon Sample (SPT).
- ⧅ Indicates Shelby Tube Sample.
- ◫ Indicates No Recovery.
- ◧ Indicates SPT with 140# Hammer 30 in. Drop.
- ☑ Indicates Bulk Sample.
- ◪ Indicates Small Bag Sample.
- ◨ Indicates Non-Standard
- ⧗ Indicates Core Run.

COMPONENT PROPORTIONS

DESCRIPTIVE TERMS	RANGE OF PROPORTION
Trace	1 - 5%
Few	5 - 10%
Little	10 - 20%
Some	20 - 35%
And	35 - 50%

COMPONENT DEFINITIONS

COMPONENT	SIZE RANGE
Boulders	Larger than 12 in
Cobbles	3 in to 12 in
Gravel	3 in to No 4 (4.5mm)
Coarse gravel	3 in to 3/4 in
Fine gravel	3/4 in to No 4 (4.5mm)
Sand	No. 4 (4.5mm) to No. 200 (0.074mm)
Coarse sand	No. 4 (4.5 mm) to No. 10 (2.0 mm)
Medium sand	No. 10 (2.0 mm) to No. 40 (0.42 mm)
Fine sand	No. 40 (0.42 mm) to No. 200 (0.074 mm)
Silt and Clay	Smaller than No. 200 (0.074 mm)

MOISTURE CONTENT

DRY	Absence of moisture, dusty, dry to the touch.
DAMP	Some perceptible moisture; below optimum
MOIST	No visible water; near optimum moisture content
WET	Visible free water, usually soil is below water table.

RELATIVE DENSITY OR CONSISTENCY VERSUS SPT N -VALUE

COHESIONLESS SOILS		COHESIVE SOILS		
Density	N (blows/ft)	Consistency	N (blows/ft)	Approximate Undrained Shear Strength (psf)
Very Loose	0 to 4	Very Soft	0 to 2	< 250
Loose	4 to 10	Soft	2 to 4	250 - 500
Medium Dense	10 to 30	Medium Stiff	4 to 8	500 - 1000
Dense	30 to 50	Stiff	8 to 15	1000 - 2000
Very Dense	over 50	Very Stiff	15 to 30	2000 - 4000
		Hard	over 30	> 4000

Storm Properties, Inc.

25024-24

Log of Boring B-1

Boring Location: 4320 W 1st St. & 201 S Mountain View St.

Date of Drilling: 12/18/2024 | Groundwater Depth: None Encountered

Drilling Method: Simco 2800HS

Hammer Weight: 140 lbs | Drop: 30"

Surface Elevation:

Depth (feet)	Lith-ology	Material Description	Samples: Type	Samples: Blow Counts	Laboratory: Moisture	Laboratory: Dry Density	Laboratory: Fines Content %
0		Concrete slab (6 inch thickness)					
		FILL					
		Silty (fine to medium grained) SAND					
		Brown, dense, moist; with occasional gravel					
		Alluvium					
5		Silty (fine to medium grained) SAND					
		Brown, medium dense, moist					
		SAND (fine to medium grained)					
		Light brown, medium dense, moist					
		Boring completed at depth of 5'					
10							
15							
20							
25							
30							
35							

GWT not encountered

SuperLog CivilTech Software, USA www.civiltech.com File: C:\Superlog4\25024-24.log Date: 1/3/2025

NorCal Engineering

Storm Properties, Inc.
25024-24

Log of Boring B-2

Boring Location: 4320 W 1st St. & 201 S Mountain View St.

Date of Drilling: 12/18/2024 | Groundwater Depth: None Encountered

Drilling Method: Simco 2800HS

Hammer Weight: 140 lbs | Drop: 30"

Surface Elevation:

Depth (feet)	Lith-ology	Material Description	Samples: Type	Samples: Blow Counts	Laboratory: Moisture	Laboratory: Dry Density	Laboratory: Fines Content %
0		Concrete slab (6 inch thickness), base material					
		FILL					
		Silty (fine to medium grained) SAND					
		Brown, dense, moist; with occasional gravel					
		Alluvium					
5		Silty (fine to medium grained) SAND					
		Brown, medium dense, moist					
		SAND (fine to medium grained)					
		Light brown, medium dense, moist					
		Boring completed at depth of 3'					
10							
15							
20							
25							
30							
35							

GWT not encountered

SuperLog CivilTech Software, USA www.civiltech.com File: C:\Superlog4\25024-24.log Date: 1/3/2025

NorCal Engineering

Storm Properties, Inc.
25024-24

Log of Boring B-3

Boring Location: 4320 W 1st St. & 201 S Mountain View St.

Date of Drilling: 12/18/2024 | Groundwater Depth: 9'

Drilling Method: Simco 2800HS

Hammer Weight: 140 lbs | Drop: 30"

Surface Elevation:

Depth (feet)	Lith-ology	Material Description	Samples: Type	Samples: Blow Counts	Laboratory: Moisture	Laboratory: Dry Density	Laboratory: Fines Content %
0		Concrete slab (6 inch thickness)					
		FILL Silty (fine to medium grained) SAND Brown, dense, moist; with gravel					
		Alluvium Silty (fine to medium grained) SAND Brown, medium dense, moist					
5		SAND (fine to medium grained) Light brown, medium dense, moist to wet	X	5/6/6	4.8		3
		Groundwater encountered at 9' bgs					
		Sandy SILT Grey brown, medium stiff, wet					
10			X	2/3/3	29.5		60
15			X	2/4/6	24.7		50
		SAND (fine to medium grained) Light brown, medium dense, wet					
20			X	5/5/8	23.2		10
25			X	6/7/10	22.7		4
30			X	8/9/11	21.8		6
		Silty (fine to medium grained) SAND Light brown, dense, wet; silty to slightly silty					
35							

SuperLog CivilTech Software, USA www.civiltech.com File: C:\Superlog4\25024-24.log Date: 1/3/2025

NorCal Engineering

Storm Properties, Inc. 25024-24	Log of Boring B-3

Boring Location: 4320 W 1st St. & 201 S Mountain View St.

Date of Drilling: 12/18/2024 | Groundwater Depth: 9'

Drilling Method: Simco 2800HS

Hammer Weight: 140 lbs | Drop: 30"

Surface Elevation:

Depth (feet)	Lith-ology	Material Description	Samples: Type	Samples: Blow Counts	Laboratory: Moisture	Laboratory: Dry Density	Laboratory: Fines Content %
35		Silty (fine to medium grained) SAND Light brown, dense, wet; silty to slightly silty		6/11/15	24.4		24
40				10/13/18	22.9		25
45				8/12/18	22.1		18
50				10/10/25	21.5		15
		Boring completed at depth of 51.5					
55							
60							
65							
70							

SuperLog CivilTech Software, USA www.civiltech.com File: C:\Superlog4\25024-24.log Date: 1/3/2025

NorCal Engineering

Storm Properties, Inc.
25024-24

Log of Boring B-4

Boring Location: 4320 W 1st St. & 201 S Mountain View St.

Date of Drilling: 12/18/2024 | Groundwater Depth: 9'

Drilling Method: Simco 2800HS

Hammer Weight: 140 lbs | Drop: 30"

Surface Elevation:

Depth (feet)	Lith-ology	Material Description	Samples: Type	Samples: Blow Counts	Laboratory: Moisture	Laboratory: Dry Density	Laboratory: Fines Content %
0		Concrete slab (6 inch thickness)					
		FILL					
		Silty (fine to medium grained) SAND					
		Brown, dense, moist; with occasional gravel and cobble					
		Alluvium					
		Silty (fine to medium grained) SAND					
5		Brown, medium dense, damp to moist	■	4/4	3.9	102.0	
		SAND (fine to medium grained)					
		Light brown, medium dense, moist to wet					
		Groundwater encountered at 9' bgs					
10			■	3/4	23.5	99.0	
		Boring completed at depth of 10'					
15							
20							
25							
30							
35							

SuperLog CivilTech Software, USA www.civiltech.com File: C:\Superlog4\25024-24.log Date: 1/3/2025

Storm Properties, Inc.
25024-24

Log of Boring B-5

Boring Location: 4320 W 1st St. & 201 S Mountain View St.

Date of Drilling: 12/18/2024 | Groundwater Depth: 9'

Drilling Method: Simco 2800HS

Hammer Weight: 140 lbs | Drop: 30"

Surface Elevation:

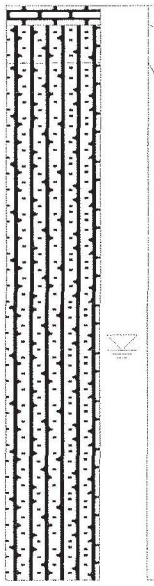

Depth (feet)	Material Description	Samples: Type	Samples: Blow Counts	Laboratory: Moisture	Laboratory: Dry Density	Laboratory: Fines Content %
0	Concrete slab (6 inch thickness)					
	FILL					
	Silty (fine to medium grained) SAND					
	Brown, dense, moist; with occasional gravel		5/7	9.5	104.2	
	Alluvium					
5	Silty (fine to medium grained) SAND					
	Brown, medium dense, moist; silty to slightly silty		3/5	2.9	101.0	
	Groundwater encountered at 10' bgs					
10			3/4	24.7	102.8	
15			4/6	25.5	100.1	
	Boring completed at depth of 15'					
20						
25						
30						
35						

SuperLog CivilTech Software, USA www.civiltech.com File: C:\Superlog4\25024-24.log Date: 1/3/2025

NorCal Engineering

Storm Properties, Inc.
25024-24

Log of Boring B-6

Boring Location: 4320 W 1st St. & 201 S Mountain View St.

Date of Drilling: 12/18/2024 | Groundwater Depth: 9'

Drilling Method: Simco 2800HS

Hammer Weight: 140 lbs | Drop: 30"

Surface Elevation:

Depth (feet)	Lith-ology	Material Description	Samples: Type	Samples: Blow Counts	Laboratory: Moisture	Laboratory: Dry Density	Laboratory: Fines Content %
0		Concrete slab (6 inch thickness)					
		FILL					
		Silty (fine to medium grained) SAND					
		Brown, dense, moist; with occasional gravel					
		Alluvium					
		Silty (fine to medium grained) SAND					
5		Brown, medium dense, moist	■	5/5	6.2	102.0	
		SAND (fine to medium grained)					
		Light brown, medium dense, moist					
		Groundwater encountered at 9' bgs					
10			■	2/4	27.0	96.7	
		Boring completed at depth of 10'					
15							
20							
25							
30							
35							

SuperLog CivilTech Software, USA www.civiltech.com File: C:\Superlog4\25024-24.log Date: 1/3/2025

NorCal Engineering

Storm Properties, Inc.
25024-24

Log of Boring B-7

Boring Location: 4320 W 1st St. & 201 S Mountain View St.

Date of Drilling: 12/18/2024 | Groundwater Depth: 9'

Drilling Method: Simco 2800HS

Hammer Weight: 140 lbs | Drop: 30"

Surface Elevation:

Depth (feet)	Lith-ology	Material Description	Samples: Type	Samples: Blow Counts	Laboratory: Moisture	Laboratory: Dry Density	Laboratory: Fines Content %
0		Concrete slab (6 inch thickness)					
		FILL					
		Silty (fine to medium grained) SAND					
		Brown, dense, moist; with occasional gravel					
		Alluvium		5/5	5.3	101.5	
5		Silty (fine to medium grained) SAND					
		Brown, medium dense, moist					
		SAND (fine to medium grained)					
		Light brown, medium dense, moist; slightly silty to slight silt content		3/3	5.0	96.5	
		Groundwater encountered at 9' bgs					
10				4/5	28.9	98.0	
15				3/4	25.1	95.1	
20		Boring completed at depth of 20'		5/7	26.6	99.3	
25							
30							
35							

SuperLog CivilTech Software, USA www.civiltech.com File: C:\Superlog4\25024-24.log Date: 1/3/2025

NorCal Engineering

Storm Properties, Inc.
25024-24

Log of Boring B-8

Boring Location: 4320 W 1st St. & 201 S Mountain View St.

Date of Drilling: 12/18/2024 | Groundwater Depth: 9'

Drilling Method: Simco 2800HS

Hammer Weight: 140 lbs | Drop: 30"

Surface Elevation:

Depth (feet)	Lith-ology	Material Description	Samples: Type	Samples: Blow Counts	Laboratory: Moisture	Laboratory: Dry Density	Laboratory: Fines Content %
0		Concrete slab (6 inch thickness), base material					
		FILL Silty (fine to medium grained) SAND Brown, dense, moist; with occasional gravel	■	6/6	5.4	103.1	
		Alluvium Silty (fine to medium grained) SAND Brown, medium dense, moist					
5		SAND (fine to medium grained) Light brown, medium dense, moist	■	5/5	6.5	100.7	
		Groundwater encountered at 9' bgs					
10		Boring completed at depth of 10'					
15							
20							
25							
30							
35							

SuperLog CivilTech Software, USA www.civiltech.com File: C:\Superlog4\25024-24.log Date: 1/3/2025

NorCal Engineering

Appendix B
Laboratory Tests

TABLE I
MAXIMUM DENSITY TESTS

Sample	Classification	Optimum Moisture (%)	Maximum Dry Density (lbs/cu.ft)
B-5 @ 2'	Silty SAND	9.0	115.0

TABLE II
EXPANSION TESTS

Sample	Classification	Expansion Index
B-5 @ 2'	Silty SAND	0

TABLE III
ATTERBERG LIMITS

Sample	Liquid Limit	Plastic Limit	Plasticity Index
B-3 @ 10'	24	19	5

TABLE IV
CORROSION TESTS

Sample	pH	Electrical Resistivity	Sulfate (%)	Chloride (ppm)
B-5 @ 2'	7.2	4,260	0.003	335

% by weight
ppm – mg/kg

Sample No.		B5@2'		
Sample Type:		Undisturbed-Saturated		
Soil Description:		Silty Fine-Medium Grained Sand		
		1	2	3
Normal Stress	(psf)	1000	2000	3000
Peak Stress	(psf)	660	1260	1800
Displacement	(in.)	0.200	0.225	0.225
Residual Stress	(psf)	648	1260	1800
Displacement	(in.)	0.250	0.250	0.250
Initial Dry Density	(pcf)	104.2	104.2	104.2
Initial Water Content	(%)	9.5	9.5	9.5
Strain Rate	(in./min.)	0.020	0.020	0.020

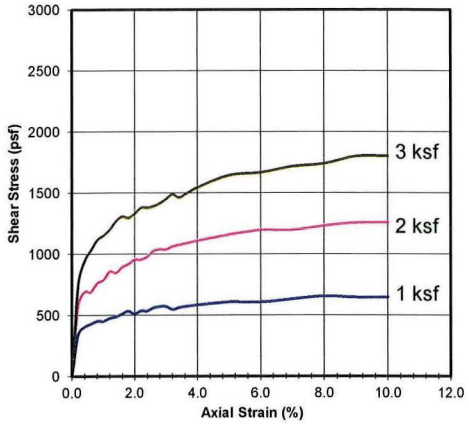

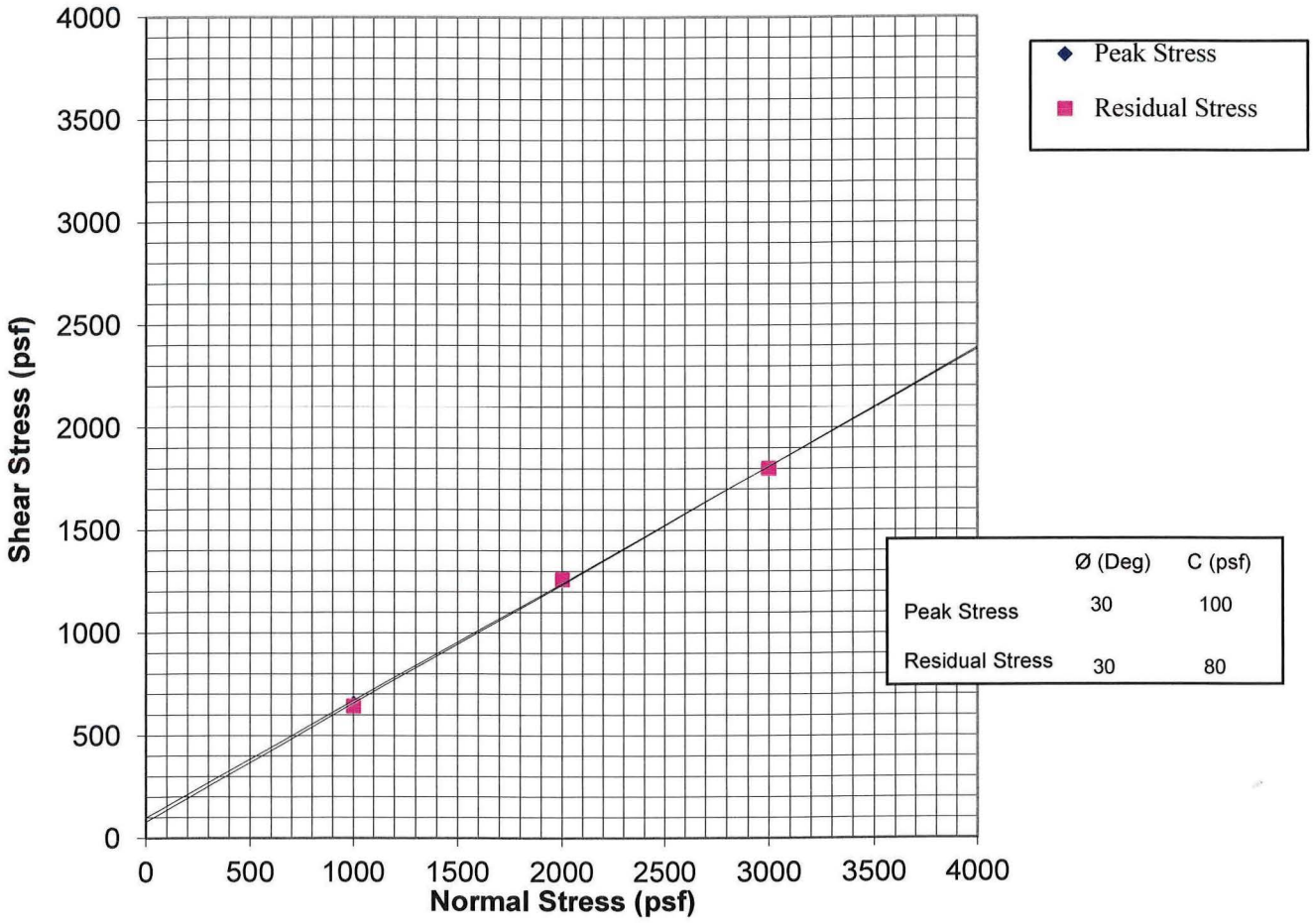

	Ø (Deg)	C (psf)
Peak Stress	30	100
Residual Stress	30	80

NorCal Engineering

SOILS AND GEOTECHNICAL CONSULTANTS

Storm Properties

PROJECT NUMBER: 25024-24 DATE: 1/9/2025

DIRECT SHEAR TEST

ASTM D3080

Plate A

Vertical Pressure (kips/sq.ft.)	Sample Height (inches)	Consolidation (percent)	
0.125	1.0000	0.0	
0.25	0.9980	0.2	
0.5	0.9960	0.4	
1	0.9925	0.8	
1	0.9895	1.1	Saturated
2	0.9840	1.6	
4	0.9785	2.2	
8	0.9710	2.9	
0.25	0.9755	2.5	

Sample No.	B5	Depth	5'	Date	1/9/2025

Date Tested: 12/23/2024
Sample: B5
Depth: 5'

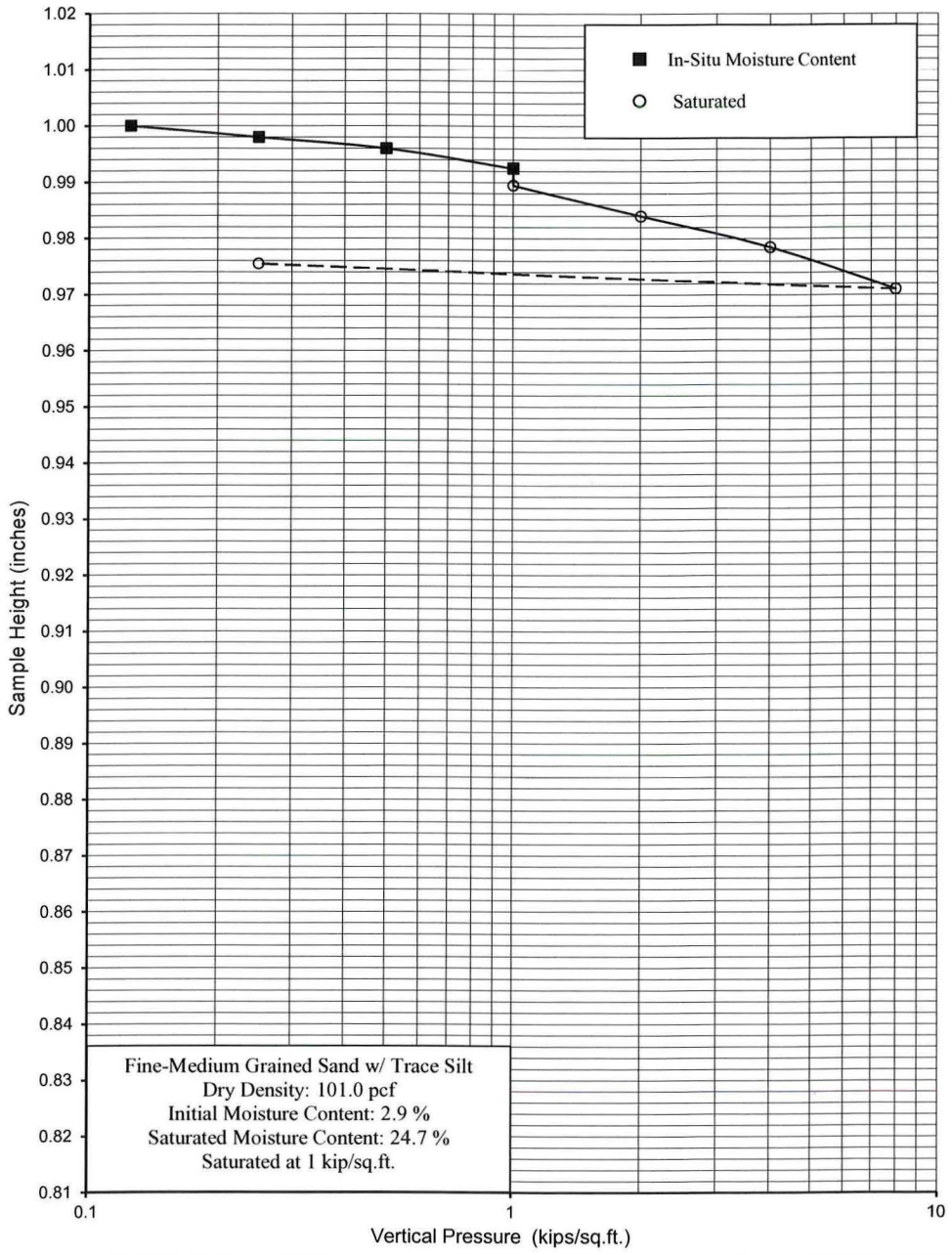

NorCal Engineering

SOILS AND GEOTECHNICAL CONSULTANTS

Storm Properties, Inc.

PROJECT NUMBER: 25024-24 DATE: 1/9/2025

CONSOLIDATION TEST

ASTM D2435

Plate B

Vertical Pressure (kips/sq.ft.)	Sample Height (inches)	Consolidation (percent)	
0.125	1.0000	0.0	
0.25	0.9980	0.2	
0.5	0.9940	0.6	
1	0.9890	1.1	
1	0.9840	1.6	
2	0.9790	2.1	
4	0.9725	2.8	
8	0.9655	3.5	Saturated
0.25	0.9700	3.0	

Sample No.	B5	Depth	10'	Date	1/9/2025

Date Tested: 12/23/2024
Sample: B5
Depth: 10'

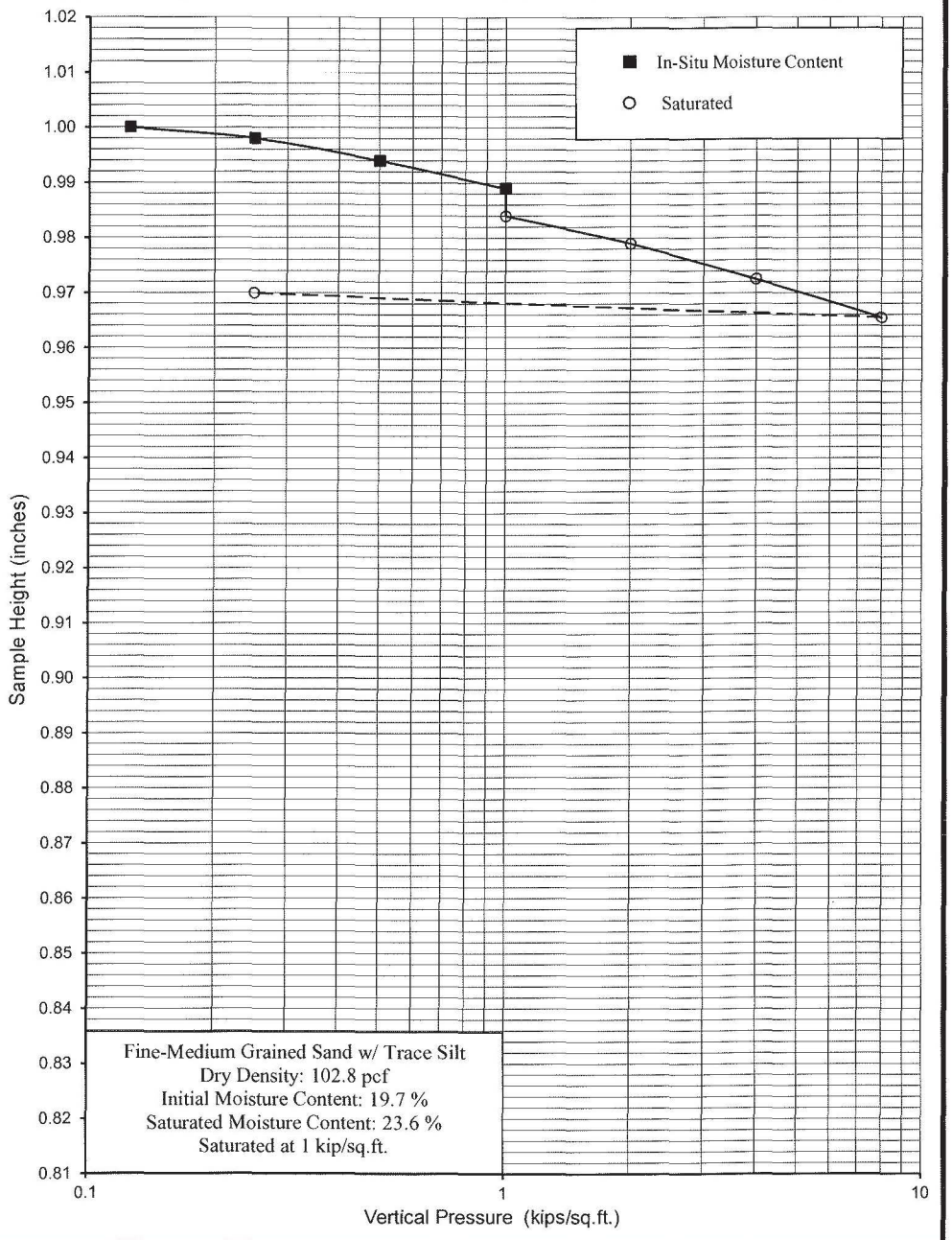

NorCal Engineering

SOILS AND GEOTECHNICAL CONSULTANTS

Storm Properties, Inc.

PROJECT NUMBER: 25024-24 DATE: 1/9/2025

CONSOLIDATION TEST

ASTM D2435

Plate C

Vertical Pressure (kips/sq.ft.)	Sample Height (inches)	Consolidation (percent)	
0.125	1.0000	0.0	
0.25	0.9960	0.4	
0.5	0.9925	0.8	
1	0.9870	1.3	
1	0.9825	1.8	Saturated
2	0.9760	2.4	
4	0.9690	3.1	
8	0.9610	3.9	
0.25	0.9680	3.2	

Sample No.	B7	Depth	3'	Date	1/9/2025

Date Tested: 12/26/2024
Sample: B7
Depth: 3'

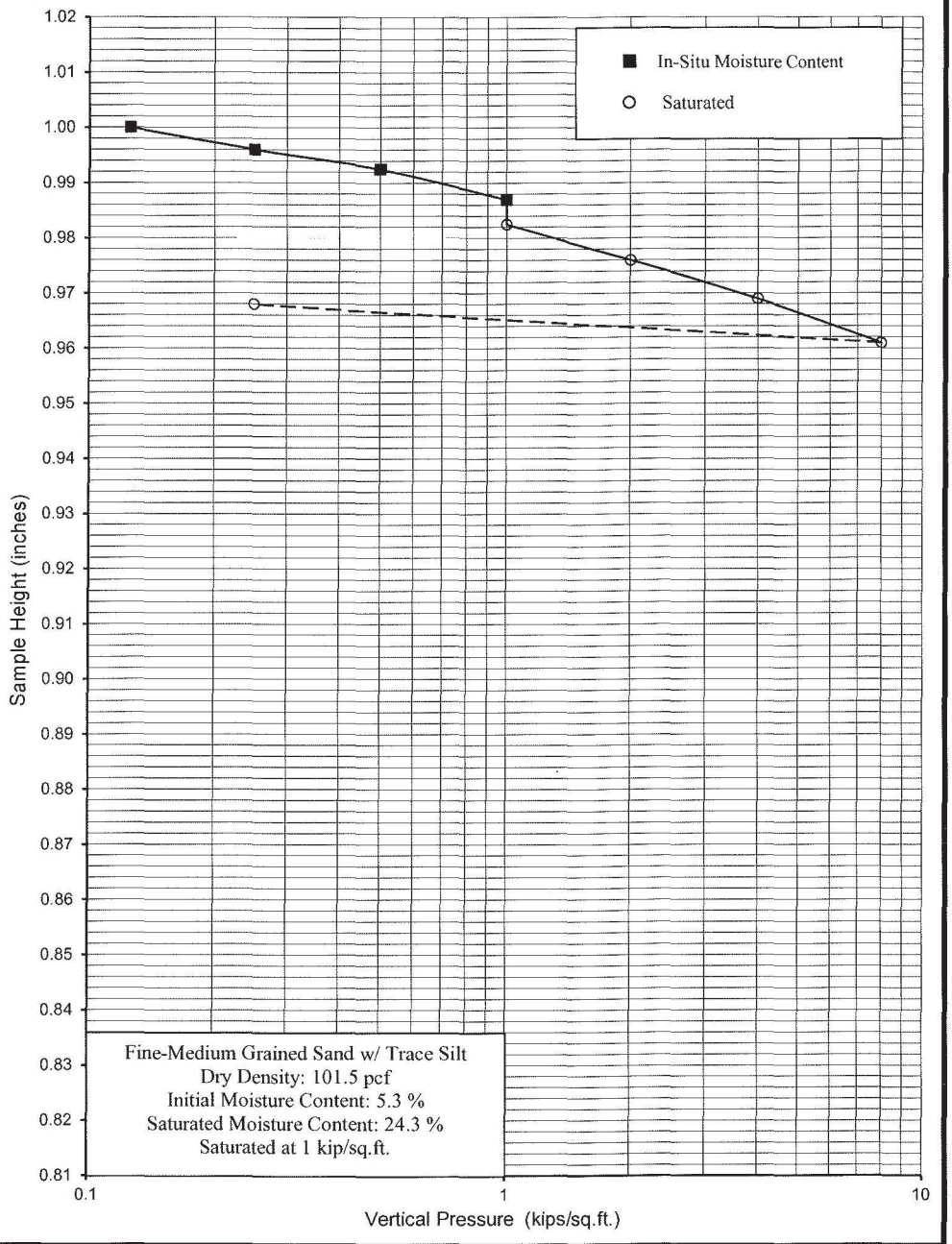

NorCal Engineering

SOILS AND GEOTECHNICAL CONSULTANTS

Storm Properties, Inc.

PROJECT NUMBER: 25024-24 DATE: 1/9/2025

CONSOLIDATION TEST

ASTM D2435

Plate D

Vertical Pressure (kips/sq.ft.)	Sample Height (inches)	Consolidation (percent)	
0.125	1.0000	0.0	
0.25	0.9990	0.1	
0.5	0.9960	0.4	
1	0.9940	0.6	
1	0.9900	1.0	
2	0.9835	1.7	
4	0.9780	2.2	
8	0.9700	3.0	Saturated
0.25	0.9740	2.6	

Sample No.	B7	Depth	6'	Date	1/9/2025

Date Tested: 12/26/2024
Sample: B7
Depth: 6'

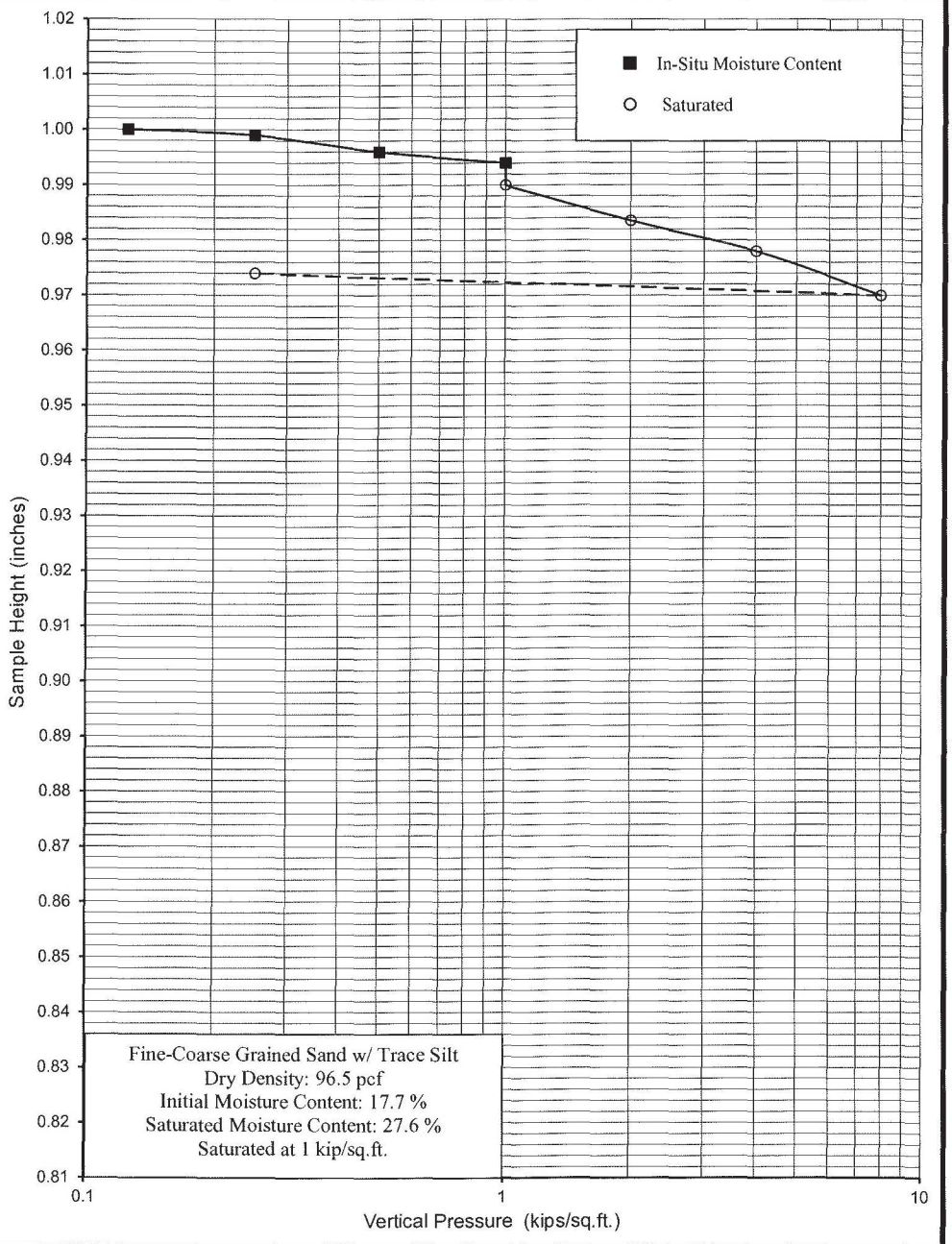

NorCal Engineering

SOILS AND GEOTECHNICAL CONSULTANTS

Storm Properties, Inc.

PROJECT NUMBER: 25024-24 DATE: 1/9/2025

CONSOLIDATION TEST

ASTM D2435

Plate E

Appendix C
Liquefaction Analysis

ASCE Hazards Report

Address:
4320 W 1st St
Santa Ana, California
92704

Standard: ASCE/SEI 7-16
Risk Category: II
Soil Class: D - Stiff Soil

Latitude: 33.745075
Longitude: -117.926259
Elevation: 68.86246543522613 ft (NAVD 88)

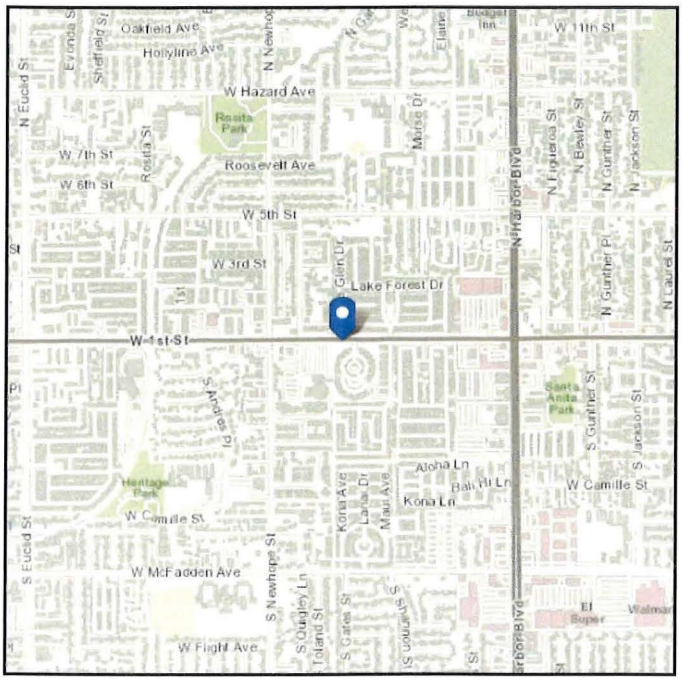

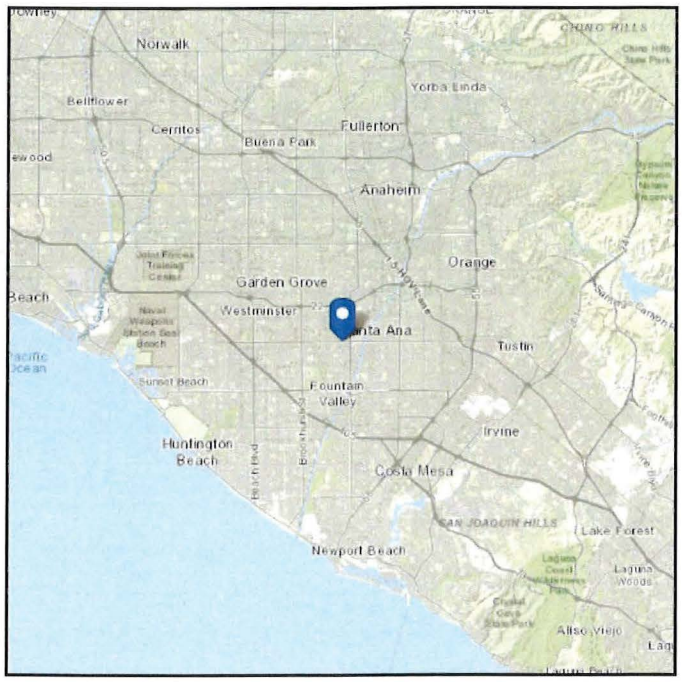

ASCE
AMERICAN SOCIETY OF CIVIL ENGINEERS

Seismic

Site Soil Class: D - Stiff Soil

Results:

S_S :	1.325	S_{D1} :	N/A
S_1 :	0.472	T_L :	8
F_a :	1	PGA :	0.566
F_v :	N/A	PGA_M :	0.622
S_{MS} :	1.325	F_{PGA} :	1.1
S_{M1} :	N/A	I_e :	1
S_{DS} :	0.883	C_v :	1.365

Ground motion hazard analysis may be required. See ASCE/SEI 7-16 Section 11.4.8.

Data Accessed: Thu Dec 26 2024

Date Source: USGS Seismic Design Maps

The ASCE Hazard Tool is provided for your convenience, for informational purposes only, and is provided "as is" and without warranties of any kind. The location data included herein has been obtained from information developed, produced, and maintained by third party providers; or has been extrapolated from maps incorporated in the ASCE standard. While ASCE has made every effort to use data obtained from reliable sources or methodologies, ASCE does not make any representations or warranties as to the accuracy, completeness, reliability, currency, or quality of any data provided herein. Any third-party links provided by this Tool should not be construed as an endorsement, affiliation, relationship, or sponsorship of such third-party content by or from ASCE.

ASCE does not intend, nor should anyone interpret, the results provided by this Tool to replace the sound judgment of a competent professional, having knowledge and experience in the appropriate field(s) of practice, nor to substitute for the standard of care required of such professionals in interpreting and applying the contents of this Tool or the ASCE standard.

In using this Tool, you expressly assume all risks associated with your use. Under no circumstances shall ASCE or its officers, directors, employees, members, affiliates, or agents be liable to you or any other person for any direct, indirect, special, incidental, or consequential damages arising from or related to your use of, or reliance on, the Tool or any information obtained therein. To the fullest extent permitted by law, you agree to release and hold harmless ASCE from any and all liability of any nature arising out of or resulting from any use of data provided by the ASCE Hazard Tool.

ArcGIS Web Map

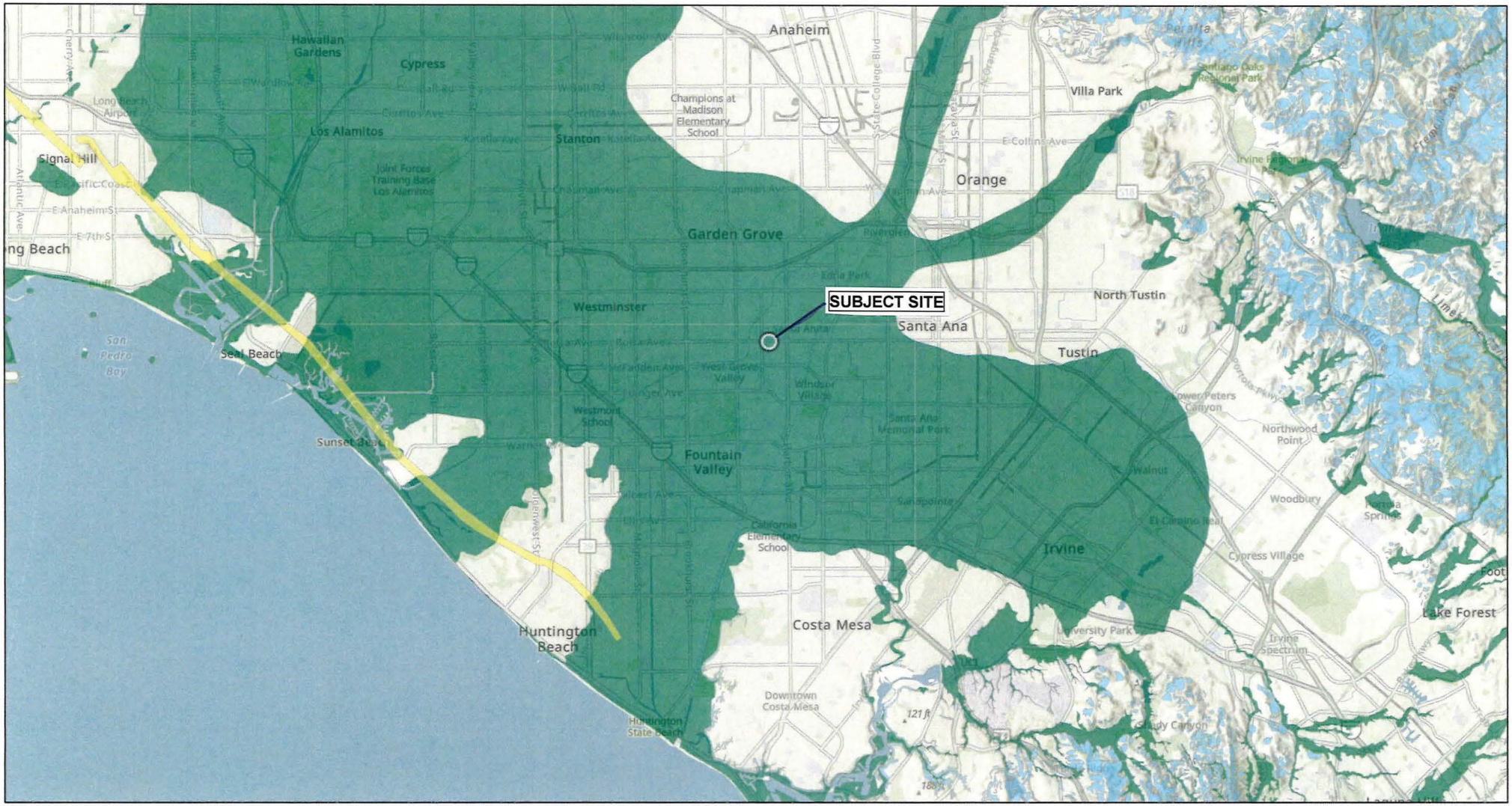

12/26/2024, 11:21:19 AM

1:144,352

- CGS Alquist-Priolo Fault Zones
- CGS Liquefaction Zones
- CGS Landslide Zones

0 1.5 3 6 mi

0 2.25 4.5 9 km

Esri, NASA, NGA, USGS, Earthstar Geographics, Sources: Esri, TomTom, Garmin, FAO, NOAA, USGS, © OpenStreetMap contributors, and the GIS User Community, County of Los Angeles, California State Parks, Esri, TomTom, Garmin, SafeGraph,

California
Department of Conservation

Compilation of Quaternary Surficial Deposits

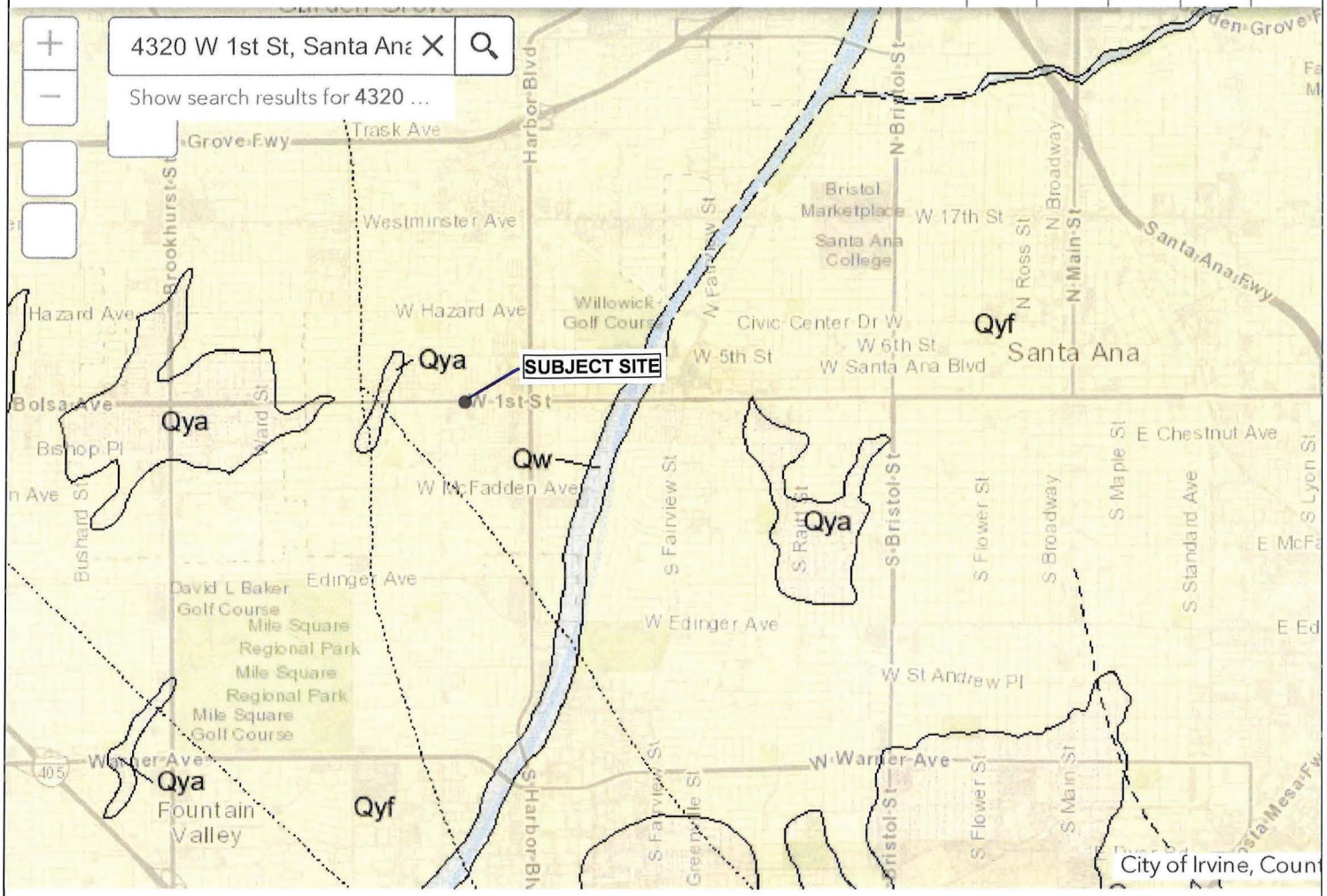

NORTH

1mi

-117.862 33.741 Degrees

PType	Qyf
Name	Young Alluvial Fan Deposits
Source Quadrangle	Santa Ana 30' x 60'
Source	USGS
Reference Document	santa_ana_30x60_reference.pdf

Copyright © 2022 State of California

SITE LOCATION: _____ DEPTH TO WATER TABLE = 9'

GEOTECHNICAL REPORT: _____ EARTHQUAKE MAGNITUDE = 6.9

GEOLOGY REPORT: _____ PEAK GROUND ACCELERATION = 0.62g

DEPTH BELOW FINAL GRADE (FEET)	MOIST DENSITY (PCF)	σ_o TOTAL STRESS (PSF)	$\bar{\sigma}_o$ EFFECTIVE STRESS (PSF)	$\sigma_o/\bar{\sigma}_o$ (-)	r_d (-)	① $\tau_h/\bar{\sigma}_o$ (-)	N VALUE (BLOWS/FT)	RELATIVE DENSITY (%)	C_N (-)	C_E (-)	C_B (-)	C_R (-)	C_S (-)	$(N_1)_{60}$ (BLOWS/ft)	FINES (%)	CRR M=7.5	MSF (-)	CRR M=6.9	LIQ. F.S.
5	105	525	same	1.00	0.99	0.40	12	75	>1.6	1.00	1.05	0.70	1.20	>17	3	>0.19	1.3	>0.25	>0.6
10	125	1150	1088	1.06	0.96	0.41	6	50	1.3			0.75		7.5	60	>0.16		>0.21	>0.5
15		1775	1401	1.27	0.92	0.47	10	60	1.2			0.85		13	50	>0.10		>0.13	>0.3
20		2400	1714	1.40	0.87	0.49	13	65	1.1			0.90		16	10	0.20		0.26	0.5
25		3025	2027	1.49	0.80	0.48	17	70	1.0			0.95		20	4	0.21		0.27	0.6
30		3650	2340	1.56	0.74	0.46	20	70	0.92			1.00		23	6	0.26		0.34	0.7
35		4275	2653	1.61	0.68	0.44	26	80	0.88					29	24	>0.50		>0.65	>1.5
40		4900	2966	1.65	0.64	0.42	31	80	0.85					33	25				>1.5
45		5525	3279	1.68	0.61	0.41	30	80	0.82					31	18				>1.6
50		6150	3592	1.71	0.58	0.40	35	80	0.79					35	15				>1.6

① INDUCED CYCLIC STRESS RATIO = $\tau_{ave}/\bar{\sigma}_o = 0.65 \cdot \frac{a_{max}}{g} \cdot \frac{\sigma_o}{\bar{\sigma}_o} \cdot r_d$

- C_E = Corr. - Energy Ratio = Energy Ratio/60%
- C_B = Corr. - Borehole Dia. = 1.15 for 8" dia. borehole
- C_R = Corr. - Rod Length
- C_S = Corr. - Sampling Method

Actual Energy Ratio = 0.67-1.17 (Safety Hammer)
= 0.50-1.00 (Donut Hammer)

Sampling Method = 1.0 Standard sampler
= 1.2 Sampler w/o liners

NorCal Engineering
SOILS AND GEOTECHNICAL CONSULTANTS

PROJECT | DATE

EVALUATION OF LIQUEFACTION POTENTIAL

SEISMIC SETTLEMENT EVALUATION ⇒ GWT @ 9',

EQ Magnitude = 6.9, Hor. Ground Acceleration = 0.62g

Depth (ft)	$N_{1,60}$ (Blows/ft)	Fines (%)	EQ CSR	M_{design} / $M_{7.5}$	Design CSR	Vert. Strain	Seismic Settle	Liquefaction F.S.
9-10	7.5 (12.5)	60 (5)	0.41	1.3	0.32	2.2%	0.26"	>0.5
10-15	13 (20)	50 (5)	0.47		0.36	1.5%	0.90"	>0.3
15-20	16 (17)	10 (5)	0.49		0.38	1.8%	1.08"	0.5
20-25	20	4	0.48		0.37	1.5%	0.90"	0.6
25-30	23	6	0.46		0.35	1.3%	0.78"	0.7

$\Sigma s = 3.9"$

Say $\Delta_{EQ} \leq 3\ 7/8"$ ←

NL - Non liquefiable soil layers with LL > 39% and PI > 18%

NorCal Engineering
SOILS AND GEOTECHNICAL CONSULTANTS

DATE

Appendix D
Soil Infiltration Data

NORCAL ENGINEERING
SOILS AND GEOTECHNICAL CONSULTANTS

PERCOLATION TEST DATA

Client: Storm Properties	**Date**: 12.18.2024
Project No.: 25024-24	**Tested By**: J.S.
Test Hole: 1	**USCS Soil Classification**:
Depth of Test Hole: 5' (60")	**Sides (if rectangular)**:
Diameter of Test Hole: 6"	**Length**:
Sandy Soil Criteria Test*:	**Width**:

TRIAL NO.	START TIME	STOP TIME	TIME INTERVAL (MIN)	INITIAL DEPTH TO WATER (IN)	FINAL DEPTH TO WATER (IN)	CHANGE IN WATER LEVEL (IN)	GREATER THAN OR EQUAL TO 6"
1	700	701	1	45.0	60.0	15.0	Y
2	701	702	1	45.0	60.0	15.0	Y

*If two consecutive measurements show that six inches of water seeps away in less than 25 minutes, the test shall be run for an additional hour with measurements taken every 10 minutes. Otherwise, pre-soak (fill) overnight. Obtain at least twelve measurements per hole over at least six hours (approximately 30-minute intervals) with a precision of at least 0.25".

TRIAL NO	START TIME	STOP TIME	ΔT TIME INTERVAL (MIN)	Do INITIAL DEPTH TO WATER (IN)	Df FINAL DEPTH TO WATER (IN)	ΔD CHANGE IN WATER LEVEL (IN)	PERCOLATION RATE (MIN/IN)
1	702	703	1	45.0	60.0	15.0	
2	703	704	1	45.0	60.0	15.0	
3	704	705	1	45.0	60.0	15.0	
4	705	706	1	45.0	60.0	15.0	
5	706	707	1	45.0	60.0	15.0	
6	707	708	1	45.0	60.0	15.0	
7	708	709	1	45.0	60.0	15.0	
8	709	710	1	45.0	60.0	15.0	
9	710	711	1	45.0	60.0	15.0	
10	711	712	1	45.0	60.0	15.0	
11	712	713	1	45.0	60.0	15.0	
12	713	714	1	45.0	60.0	15.0	
13	714	715	1	45.0	60.0	15.0	
14	715	716	1	45.0	60.0	15.0	
15	716	717	1	45.0	60.0	15.0	

COMMENTS:

NORCAL ENGINEERING

SOILS AND GEOTECHNICAL CONSULTANTS

PERCOLATION TEST DATA

Client: Storm Properties	**Date**: 12.18.2024
Project No.: 25024-24	**Tested By**: J.S.
Test Hole: 1	**USCS Soil Classification**:
Depth of Test Hole: '5' (60")	**Sides (if rectangular)**:
Diameter of Test Hole: 6"	**Length**:
Sandy Soil Criteria Test*:	**Width**:

TRIAL NO.	START TIME	STOP TIME	TIME INTERVAL (MIN)	INITIAL DEPTH TO WATER (IN)	FINAL DEPTH TO WATER (IN)	CHANGE IN WATER LEVEL (IN)	GREATER THAN OR EQUAL TO 6"
1							
2							

*If two consecutive measurements show that six inches of water seeps away in less than 25 minutes, the test shall be run for an additional hour with measurements taken every 10 minutes. Otherwise, pre-soak (fill) overnight. Obtain at least twelve measurements per hole over at least six hours (approximately 30-minute intervals) with a precision of at least 0.25".

TRIAL NO	START TIME	STOP TIME	ΔT TIME INTERVAL (MIN)	Do INITIAL DEPTH TO WATER (IN)	Df FINAL DEPTH TO WATER (IN)	ΔD CHANGE IN WATER LEVEL (IN)	PERCOLATION RATE (MIN/IN)
1	717	718	1	45.0	60.0	15.0	
2	718	719	1	45.0	60.0	15.0	
3	719	721	2	45.0	60.0	15.0	
4	721	723	2	45.0	60.0	15.0	
5	723	725	2	45.0	60.0	15.0	
6	725	728	3	45.0	60.0	15.0	
7	728	731	3	45.0	60.0	15.0	
8	731	734	3	45.0	60.0	15.0	
9	734	737	3	45.0	60.0	15.0	
10	737	740	3	45.0	60.0	15.0	
11	740	743	3	45.0	60.0	15.0	
12	743	746	3	45.0	60.0	15.0	
13	746	749	3	45.0	60.0	15.0	
14	749	753	4	45.0	60.0	15.0	
15	753	757	4	45.0	60.0	15.0	

COMMENTS:

NORCAL ENGINEERING

SOILS AND GEOTECHNICAL CONSULTANTS

PERCOLATION TEST DATA

Client: Storm Properties	**Date**: 12.18.2024
Project No.: 25024-24	**Tested By**: J.S.
Test Hole: 1	**USCS Soil Classification**:
Depth of Test Hole: 5' (60")	**Sides (if rectangular)**:
Diameter of Test Hole: 6"	**Length**:
Sandy Soil Criteria Test*:	**Width**:

TRIAL NO.	START TIME	STOP TIME	TIME INTERVAL (MIN)	INITIAL DEPTH TO WATER (IN)	FINAL DEPTH TO WATER (IN)	CHANGE IN WATER LEVEL (IN)	GREATER THAN OR EQUAL TO 6"
1							
2							

*If two consecutive measurements show that six inches of water seeps away in less than 25 minutes, the test shall be run for an additional hour with measurements taken every 10 minutes. Otherwise, pre-soak (fill) overnight. Obtain at least twelve measurements per hole over at least six hours (approximately 30-minute intervals) with a precision of at least 0.25".

TRIAL NO	START TIME	STOP TIME	ΔT TIME INTERVAL (MIN)	Do INITIAL DEPTH TO WATER (IN)	Df FINAL DEPTH TO WATER (IN)	ΔD CHANGE IN WATER LEVEL (IN)	PERCOLATION RATE (MIN/IN)
1	757	801	4	45.0	60.0	15.0	
2	801	905	4	45.0	60.0	15.0	
3							
4							
5							
6							
7							
8							
9							
10							
11							
12							
13							
14							
15							
COMMENTS:							

NORCAL ENGINEERING

SOILS AND GEOTECHNICAL CONSULTANTS

PERCOLATION TEST DATA

Client: Storm Properties	**Date:** 12.18.2024
Project No.: 25024-24	**Tested By:** J.S.
Test Hole: 2	**USCS Soil Classification:**
Depth of Test Hole: 3'(36")	**Sides (if rectangular):**
Diameter of Test Hole: 6"	**Length:**
Sandy Soil Criteria Test*:	**Width:**

TRIAL NO.	START TIME	STOP TIME	TIME INTERVAL (MIN)	INITIAL DEPTH TO WATER (IN)	FINAL DEPTH TO WATER (IN)	CHANGE IN WATER LEVEL (IN)	GREATER THAN OR EQUAL TO 6"
1	658	654	1	21.0	36.0	15.0	Y
2	659	700	1	21.0	36.0	15.0	Y

*If two consecutive measurements show that six inches of water seeps away in less than 25 minutes, the test shall be run for an additional hour with measurements taken every 10 minutes. Otherwise, pre-soak (fill) overnight. Obtain at least twelve measurements per hole over at least six hours (approximately 30-minute intervals) with a precision of at least 0.25".

TRIAL NO	START TIME	STOP TIME	ΔT TIME INTERVAL (MIN)	Do INITIAL DEPTH TO WATER (IN)	Df FINAL DEPTH TO WATER (IN)	ΔD CHANGE IN WATER LEVEL (IN)	PERCOLATION RATE (MIN/IN)
1	700	701	1	21.0	36.0	15.0	
2	701	702	1	21.0	36.0	15.0	
3	702	703	1	21.0	36.0	15.0	
4	703	704	1	21.0	36.0	15.0	
5	704	705	1	21.0	36.0	15.0	
6	705	706	1	21.0	36.0	15.0	
7	706	707	1	21.0	36.0	15.0	
8	707	708	1	21.0	36.0	15.0	
9	708	709	1	21.0	36.0	15.0	
10	709	710	1	21.0	36.0	15.0	
11	710	711		21.0	36.0	15.0	
12	711	712	1	21.0	36.0	15.0	
13	712	713	1	21.0	36.0	15.0	
14	713	714	1	21.0	36.0	15.0	
15	714	715	1	21.0	36.0	15.0	

COMMENTS:

NORCAL ENGINEERING
SOILS AND GEOTECHNICAL CONSULTANTS

PERCOLATION TEST DATA

Client: Storm Properties	**Date**: 12.18.2024
Project No.:25024-24	**Tested By**: J.S.
Test Hole: 2	**USCS Soil Classification**:
Depth of Test Hole: 3'(36")	**Sides (if rectangular)**:
Diameter of Test Hole: 6"	**Length**:
Sandy Soil Criteria Test*:	**Width**:

TRIAL NO.	START TIME	STOP TIME	TIME INTERVAL (MIN)	INITIAL DEPTH TO WATER (IN)	FINAL DEPTH TO WATER (IN)	CHANGE IN WATER LEVEL (IN)	GREATER THAN OR EQUAL TO 6"
1							
2							

*If two consecutive measurements show that six inches of water seeps away in less than 25 minutes, the test shall be run for an additional hour with measurements taken every 10 minutes. Otherwise, pre-soak (fill) overnight. Obtain at least twelve measurements per hole over at least six hours (approximately 30-minute intervals) with a precision of at least 0.25".

TRIAL NO	START TIME	STOP TIME	ΔT TIME INTERVAL (MIN)	Do INITIAL DEPTH TO WATER (IN)	Df FINAL DEPTH TO WATER (IN)	ΔD CHANGE IN WATER LEVEL (IN)	PERCOLATION RATE (MIN/IN)
1	715	716	1	21.0	36.0	15.0	
2	716	717	1	21.0	36.0	15.0	
3	717	718	1	21.0	36.0	15.0	
4	718	719	1	21.0	36.0	15.0	
5	719	720	1	21.0	36.0	15.0	
6	720	721	1	21.0	36.0	15.0	
7	721	722	1	21.0	36.0	15.0	
8	722	723	1	21.0	36.0	15.0	
9	723	724	1	21.0	36.0	15.0	
10	724	725	1	21.0	36.0	15.0	
11	725	726	1	21.0	36.0	15.0	
12	726	727	1	21.0	36.0	15.0	
13	727	728	1	21.0	36.0	15.0	
14	728	729	1	21.0	36.0	15.0	
15	729	730	1	21.0	36.0	15.0	

COMMENTS:

NORCAL ENGINEERING

SOILS AND GEOTECHNICAL CONSULTANTS

PERCOLATION TEST DATA

Client: Storm Properties	**Date**: 12.18.2024
Project No.: 25024-24	**Tested By**: J.S.
Test Hole: 2	**USCS Soil Classification**:
Depth of Test Hole: 3'(36")	**Sides (if rectangular)**:
Diameter of Test Hole: 6"	**Length**:
Sandy Soil Criteria Test*:	**Width**:

TRIAL NO.	START TIME	STOP TIME	TIME INTERVAL (MIN)	INITIAL DEPTH TO WATER (IN)	FINAL DEPTH TO WATER (IN)	CHANGE IN WATER LEVEL (IN)	GREATER THAN OR EQUAL TO 6"
1							
2							

*If two consecutive measurements show that six inches of water seeps away in less than 25 minutes, the test shall be run for an additional hour with measurements taken every 10 minutes. Otherwise, pre-soak (fill) overnight. Obtain at least twelve measurements per hole over at least six hours (approximately 30-minute intervals) with a precision of at least 0.25".

TRIAL NO	START TIME	STOP TIME	ΔT TIME INTERVAL (MIN)	Do INITIAL DEPTH TO WATER (IN)	Df FINAL DEPTH TO WATER (IN)	ΔD CHANGE IN WATER LEVEL (IN)	PERCOLATION RATE (MIN/IN)
1	730	731	1	21.0	36.0	15.0	
2	731	733	2	21.0	36.0	15.0	
3	733	735	2	21.0	36.0	15.0	
4	735	737	2	21.0	36.0	15.0	
5	737	739	2	21.0	36.0	15.0	
6	739	741	2	21.0	36.0	15.0	
7	741	743	2	21.0	36.0	15.0	
8	743	745	2	21.0	36.0	15.0	
9	745	747	2	21.0	36.0	15.0	
10	747	749	2	21.0	36.0	15.0	
11	749	751	2	21.0	36.0	15.0	
12	751	753	2	21.0	36.0	15.0	
13	753	755	2	21.0	36.0	15.0	
14	755	757	2	21.0	36.0	15.0	
15	757	759	2	21.0	36.0	15.0	
16	759	801	2	21.0	36.0	15.0	
COMMENTS:							

SOIL INFILTRATION RATE CALCS ⇒ PORCHET METHOD

Location:	TH-1	TH-2
• Depth of Hole =	5.0'	3.0'
• Hole Radius =	3"	3"
• Drop = Δh	15"	15"
• Time = Δt Interval	4 min	2 min
• Initial Water Depth = H_o	15"	15"
• Final Water Depth = H_t	∅	∅
• Average Water Head = H_{avg}	7.5"	7.5"
• INFILTRATION RATE	37.5 in/hr	75 in/hr

$$\text{Infiltration Rate} = \frac{\Delta h\ (60)(r)}{\Delta t\ (r + 2 \cdot H_{avg})}$$

$$\text{Average Water Head} = \tfrac{1}{2}(H_t - H_o)$$

NorCal Engineering
SOILS AND GEOTECHNICAL CONSULTANTS

DATE

United States Department of Agriculture

NRCS

Natural Resources Conservation Service

A product of the National Cooperative Soil Survey, a joint effort of the United States Department of Agriculture and other Federal agencies, State agencies including the Agricultural Experiment Stations, and local participants

Custom Soil Resource Report for Orange County and Part of Riverside County, California



December 2, 2024

Preface

Soil surveys contain information that affects land use planning in survey areas. They highlight soil limitations that affect various land uses and provide information about the properties of the soils in the survey areas. Soil surveys are designed for many different users, including farmers, ranchers, foresters, agronomists, urban planners, community officials, engineers, developers, builders, and home buyers. Also, conservationists, teachers, students, and specialists in recreation, waste disposal, and pollution control can use the surveys to help them understand, protect, or enhance the environment.

Various land use regulations of Federal, State, and local governments may impose special restrictions on land use or land treatment. Soil surveys identify soil properties that are used in making various land use or land treatment decisions. The information is intended to help the land users identify and reduce the effects of soil limitations on various land uses. The landowner or user is responsible for identifying and complying with existing laws and regulations.

Although soil survey information can be used for general farm, local, and wider area planning, onsite investigation is needed to supplement this information in some cases. Examples include soil quality assessments (http://www.nrcs.usda.gov/wps/portal/nrcs/main/soils/health/) and certain conservation and engineering applications. For more detailed information, contact your local USDA Service Center (https://offices.sc.egov.usda.gov/locator/app?agency=nrcs) or your NRCS State Soil Scientist (http://www.nrcs.usda.gov/wps/portal/nrcs/detail/soils/contactus/?cid=nrcs142p2_053951).

Great differences in soil properties can occur within short distances. Some soils are seasonally wet or subject to flooding. Some are too unstable to be used as a foundation for buildings or roads. Clayey or wet soils are poorly suited to use as septic tank absorption fields. A high water table makes a soil poorly suited to basements or underground installations.

The National Cooperative Soil Survey is a joint effort of the United States Department of Agriculture and other Federal agencies, State agencies including the Agricultural Experiment Stations, and local agencies. The Natural Resources Conservation Service (NRCS) has leadership for the Federal part of the National Cooperative Soil Survey.

Information about soils is updated periodically. Updated information is available through the NRCS Web Soil Survey, the site for official soil survey information.

The U.S. Department of Agriculture (USDA) prohibits discrimination in all its programs and activities on the basis of race, color, national origin, age, disability, and where applicable, sex, marital status, familial status, parental status, religion, sexual orientation, genetic information, political beliefs, reprisal, or because all or a part of an individual's income is derived from any public assistance program. (Not all prohibited bases apply to all programs.) Persons with disabilities who require

alternative means for communication of program information (Braille, large print, audiotape, etc.) should contact USDA's TARGET Center at (202) 720-2600 (voice and TDD). To file a complaint of discrimination, write to USDA, Director, Office of Civil Rights, 1400 Independence Avenue, S.W., Washington, D.C. 20250-9410 or call (800) 795-3272 (voice) or (202) 720-6382 (TDD). USDA is an equal opportunity provider and employer.

Contents

Preface.....2
How Soil Surveys Are Made.....5
Soil Map.....8
Soil Map.....9
Legend.....10
Map Unit Legend.....12
Map Unit Descriptions.....12
Orange County and Part of Riverside County, California.....14
158—Hueneme fine sandy loam, drained.....14
163—Metz loamy sand.....15
References.....17

How Soil Surveys Are Made

Soil surveys are made to provide information about the soils and miscellaneous areas in a specific area. They include a description of the soils and miscellaneous areas and their location on the landscape and tables that show soil properties and limitations affecting various uses. Soil scientists observed the steepness, length, and shape of the slopes; the general pattern of drainage; the kinds of crops and native plants; and the kinds of bedrock. They observed and described many soil profiles. A soil profile is the sequence of natural layers, or horizons, in a soil. The profile extends from the surface down into the unconsolidated material in which the soil formed or from the surface down to bedrock. The unconsolidated material is devoid of roots and other living organisms and has not been changed by other biological activity.

Currently, soils are mapped according to the boundaries of major land resource areas (MLRAs). MLRAs are geographically associated land resource units that share common characteristics related to physiography, geology, climate, water resources, soils, biological resources, and land uses (USDA, 2006). Soil survey areas typically consist of parts of one or more MLRA.

The soils and miscellaneous areas in a survey area occur in an orderly pattern that is related to the geology, landforms, relief, climate, and natural vegetation of the area. Each kind of soil and miscellaneous area is associated with a particular kind of landform or with a segment of the landform. By observing the soils and miscellaneous areas in the survey area and relating their position to specific segments of the landform, a soil scientist develops a concept, or model, of how they were formed. Thus, during mapping, this model enables the soil scientist to predict with a considerable degree of accuracy the kind of soil or miscellaneous area at a specific location on the landscape.

Commonly, individual soils on the landscape merge into one another as their characteristics gradually change. To construct an accurate soil map, however, soil scientists must determine the boundaries between the soils. They can observe only a limited number of soil profiles. Nevertheless, these observations, supplemented by an understanding of the soil-vegetation-landscape relationship, are sufficient to verify predictions of the kinds of soil in an area and to determine the boundaries.

Soil scientists recorded the characteristics of the soil profiles that they studied. They noted soil color, texture, size and shape of soil aggregates, kind and amount of rock fragments, distribution of plant roots, reaction, and other features that enable them to identify soils. After describing the soils in the survey area and determining their properties, the soil scientists assigned the soils to taxonomic classes (units). Taxonomic classes are concepts. Each taxonomic class has a set of soil characteristics with precisely defined limits. The classes are used as a basis for comparison to classify soils systematically. Soil taxonomy, the system of taxonomic classification used in the United States, is based mainly on the kind and character of soil properties and the arrangement of horizons within the profile. After the soil

scientists classified and named the soils in the survey area, they compared the individual soils with similar soils in the same taxonomic class in other areas so that they could confirm data and assemble additional data based on experience and research.

The objective of soil mapping is not to delineate pure map unit components; the objective is to separate the landscape into landforms or landform segments that have similar use and management requirements. Each map unit is defined by a unique combination of soil components and/or miscellaneous areas in predictable proportions. Some components may be highly contrasting to the other components of the map unit. The presence of minor components in a map unit in no way diminishes the usefulness or accuracy of the data. The delineation of such landforms and landform segments on the map provides sufficient information for the development of resource plans. If intensive use of small areas is planned, onsite investigation is needed to define and locate the soils and miscellaneous areas.

Soil scientists make many field observations in the process of producing a soil map. The frequency of observation is dependent upon several factors, including scale of mapping, intensity of mapping, design of map units, complexity of the landscape, and experience of the soil scientist. Observations are made to test and refine the soil-landscape model and predictions and to verify the classification of the soils at specific locations. Once the soil-landscape model is refined, a significantly smaller number of measurements of individual soil properties are made and recorded. These measurements may include field measurements, such as those for color, depth to bedrock, and texture, and laboratory measurements, such as those for content of sand, silt, clay, salt, and other components. Properties of each soil typically vary from one point to another across the landscape.

Observations for map unit components are aggregated to develop ranges of characteristics for the components. The aggregated values are presented. Direct measurements do not exist for every property presented for every map unit component. Values for some properties are estimated from combinations of other properties.

While a soil survey is in progress, samples of some of the soils in the area generally are collected for laboratory analyses and for engineering tests. Soil scientists interpret the data from these analyses and tests as well as the field-observed characteristics and the soil properties to determine the expected behavior of the soils under different uses. Interpretations for all of the soils are field tested through observation of the soils in different uses and under different levels of management. Some interpretations are modified to fit local conditions, and some new interpretations are developed to meet local needs. Data are assembled from other sources, such as research information, production records, and field experience of specialists. For example, data on crop yields under defined levels of management are assembled from farm records and from field or plot experiments on the same kinds of soil.

Predictions about soil behavior are based not only on soil properties but also on such variables as climate and biological activity. Soil conditions are predictable over long periods of time, but they are not predictable from year to year. For example, soil scientists can predict with a fairly high degree of accuracy that a given soil will have a high water table within certain depths in most years, but they cannot predict that a high water table will always be at a specific level in the soil on a specific date.

After soil scientists located and identified the significant natural bodies of soil in the survey area, they drew the boundaries of these bodies on aerial photographs and

identified each as a specific map unit. Aerial photographs show trees, buildings, fields, roads, and rivers, all of which help in locating boundaries accurately.

Soil Map

The soil map section includes the soil map for the defined area of interest, a list of soil map units on the map and extent of each map unit, and cartographic symbols displayed on the map. Also presented are various metadata about data used to produce the map, and a description of each soil map unit.

Custom Soil Resource Report
Soil Map

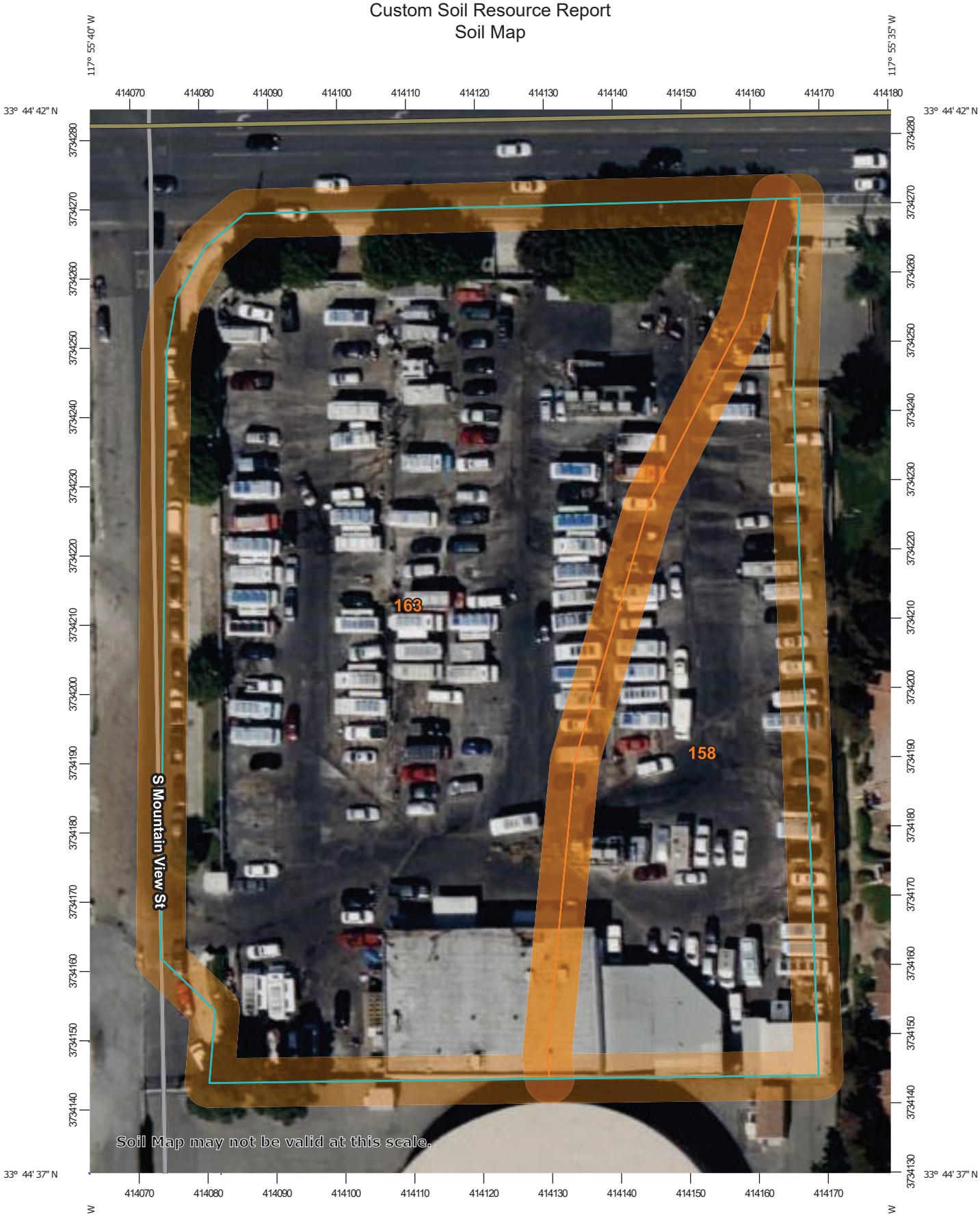

Map Scale: 1:750 if printed on A portrait (8.5" x 11") sheet.

N

Meters: 0 10 20 40 60

Feet: 0 35 70 140 210

Map projection: Web Mercator Corner coordinates: WGS84 Edge tics: UTM Zone 11N WGS84

MAP LEGEND

Area of Interest (AOI)
- Area of Interest (AOI)

Soils
- Soil Map Unit Polygons
- Soil Map Unit Lines
- Soil Map Unit Points

Special Point Features
- Blowout
- Borrow Pit
- Clay Spot
- Closed Depression
- Gravel Pit
- Gravelly Spot
- Landfill
- Lava Flow
- Marsh or swamp
- Mine or Quarry
- Miscellaneous Water
- Perennial Water
- Rock Outcrop
- Saline Spot
- Sandy Spot
- Severely Eroded Spot
- Sinkhole
- Slide or Slip
- Sodic Spot
- Spoil Area
- Stony Spot
- Very Stony Spot
- Wet Spot
- Other
- Special Line Features

Water Features
- Streams and Canals

Transportation
- Rails
- Interstate Highways
- US Routes
- Major Roads
- Local Roads

Background
- Aerial Photography

MAP INFORMATION

The soil surveys that comprise your AOI were mapped at 1:24,000.

Warning: Soil Map may not be valid at this scale.

Enlargement of maps beyond the scale of mapping can cause misunderstanding of the detail of mapping and accuracy of soil line placement. The maps do not show the small areas of contrasting soils that could have been shown at a more detailed scale.

Please rely on the bar scale on each map sheet for map measurements.

Source of Map: Natural Resources Conservation Service
Web Soil Survey URL:
Coordinate System: Web Mercator (EPSG:3857)

Maps from the Web Soil Survey are based on the Web Mercator projection, which preserves direction and shape but distorts distance and area. A projection that preserves area, such as the Albers equal-area conic projection, should be used if more accurate calculations of distance or area are required.

This product is generated from the USDA-NRCS certified data as of the version date(s) listed below.

Soil Survey Area: Orange County and Part of Riverside County, California
Survey Area Data: Version 18, Aug 30, 2024

Soil map units are labeled (as space allows) for map scales 1:50,000 or larger.

Date(s) aerial images were photographed: Mar 14, 2022—Mar 17, 2022

The orthophoto or other base map on which the soil lines were compiled and digitized probably differs from the background

MAP LEGEND

MAP INFORMATION

imagery displayed on these maps. As a result, some minor shifting of map unit boundaries may be evident.

Map Unit Legend

Map Unit Symbol	Map Unit Name	Acres in AOI	Percent of AOI
158	Hueneme fine sandy loam, drained	0.8	27.6%
163	Metz loamy sand	2.1	72.4%
Totals for Area of Interest		**2.9**	**100.0%**

Map Unit Descriptions

The map units delineated on the detailed soil maps in a soil survey represent the soils or miscellaneous areas in the survey area. The map unit descriptions, along with the maps, can be used to determine the composition and properties of a unit.

A map unit delineation on a soil map represents an area dominated by one or more major kinds of soil or miscellaneous areas. A map unit is identified and named according to the taxonomic classification of the dominant soils. Within a taxonomic class there are precisely defined limits for the properties of the soils. On the landscape, however, the soils are natural phenomena, and they have the characteristic variability of all natural phenomena. Thus, the range of some observed properties may extend beyond the limits defined for a taxonomic class. Areas of soils of a single taxonomic class rarely, if ever, can be mapped without including areas of other taxonomic classes. Consequently, every map unit is made up of the soils or miscellaneous areas for which it is named and some minor components that belong to taxonomic classes other than those of the major soils.

Most minor soils have properties similar to those of the dominant soil or soils in the map unit, and thus they do not affect use and management. These are called noncontrasting, or similar, components. They may or may not be mentioned in a particular map unit description. Other minor components, however, have properties and behavioral characteristics divergent enough to affect use or to require different management. These are called contrasting, or dissimilar, components. They generally are in small areas and could not be mapped separately because of the scale used. Some small areas of strongly contrasting soils or miscellaneous areas are identified by a special symbol on the maps. If included in the database for a given area, the contrasting minor components are identified in the map unit descriptions along with some characteristics of each. A few areas of minor components may not have been observed, and consequently they are not mentioned in the descriptions, especially where the pattern was so complex that it was impractical to make enough observations to identify all the soils and miscellaneous areas on the landscape.

The presence of minor components in a map unit in no way diminishes the usefulness or accuracy of the data. The objective of mapping is not to delineate pure taxonomic classes but rather to separate the landscape into landforms or landform segments that have similar use and management requirements. The delineation of such segments on the map provides sufficient information for the development of resource plans. If intensive use of small areas is planned, however,

onsite investigation is needed to define and locate the soils and miscellaneous areas.

An identifying symbol precedes the map unit name in the map unit descriptions. Each description includes general facts about the unit and gives important soil properties and qualities.

Soils that have profiles that are almost alike make up a *soil series*. Except for differences in texture of the surface layer, all the soils of a series have major horizons that are similar in composition, thickness, and arrangement.

Soils of one series can differ in texture of the surface layer, slope, stoniness, salinity, degree of erosion, and other characteristics that affect their use. On the basis of such differences, a soil series is divided into *soil phases*. Most of the areas shown on the detailed soil maps are phases of soil series. The name of a soil phase commonly indicates a feature that affects use or management. For example, Alpha silt loam, 0 to 2 percent slopes, is a phase of the Alpha series.

Some map units are made up of two or more major soils or miscellaneous areas. These map units are complexes, associations, or undifferentiated groups.

A *complex* consists of two or more soils or miscellaneous areas in such an intricate pattern or in such small areas that they cannot be shown separately on the maps. The pattern and proportion of the soils or miscellaneous areas are somewhat similar in all areas. Alpha-Beta complex, 0 to 6 percent slopes, is an example.

An *association* is made up of two or more geographically associated soils or miscellaneous areas that are shown as one unit on the maps. Because of present or anticipated uses of the map units in the survey area, it was not considered practical or necessary to map the soils or miscellaneous areas separately. The pattern and relative proportion of the soils or miscellaneous areas are somewhat similar. Alpha-Beta association, 0 to 2 percent slopes, is an example.

An *undifferentiated group* is made up of two or more soils or miscellaneous areas that could be mapped individually but are mapped as one unit because similar interpretations can be made for use and management. The pattern and proportion of the soils or miscellaneous areas in a mapped area are not uniform. An area can be made up of only one of the major soils or miscellaneous areas, or it can be made up of all of them. Alpha and Beta soils, 0 to 2 percent slopes, is an example.

Some surveys include *miscellaneous areas*. Such areas have little or no soil material and support little or no vegetation. Rock outcrop is an example.

Orange County and Part of Riverside County, California

158—Hueneme fine sandy loam, drained

Map Unit Setting

National map unit symbol: hcn3
Elevation: 0 to 430 feet
Mean annual precipitation: 15 inches
Mean annual air temperature: 64 degrees F
Frost-free period: 300 to 350 days
Farmland classification: Prime farmland if irrigated

Map Unit Composition

Hueneme and similar soils: 85 percent
Minor components: 15 percent
Estimates are based on observations, descriptions, and transects of the mapunit.

Description of Hueneme

Setting

Landform: Alluvial fans
Landform position (two-dimensional): Toeslope
Landform position (three-dimensional): Rise
Down-slope shape: Linear
Across-slope shape: Convex
Parent material: Stratified alluvium derived from sedimentary rock

Typical profile

H1 - 0 to 27 inches: fine sandy loam
H2 - 27 to 60 inches: stratified sand to silt loam

Properties and qualities

Slope: 0 to 2 percent
Depth to restrictive feature: More than 80 inches
Drainage class: Poorly drained
Capacity of the most limiting layer to transmit water (Ksat): High (1.98 to 5.95 in/hr)
Depth to water table: More than 80 inches
Frequency of flooding: None
Frequency of ponding: None
Calcium carbonate, maximum content: 1 percent
Maximum salinity: Very slightly saline to slightly saline (2.0 to 4.0 mmhos/cm)
Available water supply, 0 to 60 inches: Moderate (about 9.0 inches)

Interpretive groups

Land capability classification (irrigated): 1
Land capability classification (nonirrigated): 3c
Hydrologic Soil Group: A
Ecological site: R019XG911CA - Loamy Fan
Hydric soil rating: Yes

Minor Components

Bolsa, silt loam, drained

Percent of map unit: 5 percent
Hydric soil rating: No

San emigdio, fine sandy loam
Percent of map unit: 5 percent
Hydric soil rating: No

Hueneme, fine sandy loam
Percent of map unit: 5 percent
Hydric soil rating: No

163—Metz loamy sand

Map Unit Setting
National map unit symbol: hcn8
Elevation: 30 to 2,500 feet
Mean annual precipitation: 20 inches
Mean annual air temperature: 57 to 61 degrees F
Frost-free period: 200 to 340 days
Farmland classification: Prime farmland if irrigated

Map Unit Composition
Metz and similar soils: 80 percent
Minor components: 20 percent
Estimates are based on observations, descriptions, and transects of the mapunit.

Description of Metz

Setting
Landform: Alluvial fans
Landform position (two-dimensional): Toeslope
Landform position (three-dimensional): Side slope
Down-slope shape: Concave
Across-slope shape: Convex
Parent material: Alluvium derived from mixed

Typical profile
H1 - 0 to 17 inches: loamy sand
H2 - 17 to 63 inches: stratified sand to fine sandy loam

Properties and qualities
Slope: 0 to 2 percent
Depth to restrictive feature: More than 80 inches
Drainage class: Somewhat excessively drained
Runoff class: Low
Capacity of the most limiting layer to transmit water (Ksat): Moderately high to high (0.57 to 1.98 in/hr)
Depth to water table: More than 80 inches
Frequency of flooding: None
Frequency of ponding: None
Calcium carbonate, maximum content: 5 percent
Maximum salinity: Nonsaline to very slightly saline (0.0 to 2.0 mmhos/cm)
Available water supply, 0 to 60 inches: Low (about 5.4 inches)

Interpretive groups

Land capability classification (irrigated): 2s
Land capability classification (nonirrigated): 4e
Hydrologic Soil Group: B
Ecological site: R019XD035CA - SANDY
Hydric soil rating: No

Minor Components

San emigdio, fine sandy loam

Percent of map unit: 4 percent
Hydric soil rating: No

Hueneme, fine sandy loam

Percent of map unit: 4 percent
Hydric soil rating: No

Corralitos, loamy sand

Percent of map unit: 4 percent
Hydric soil rating: No

Metz, mod fine substratum

Percent of map unit: 4 percent
Hydric soil rating: No

Riverwash

Percent of map unit: 4 percent
Landform: Fans
Hydric soil rating: Yes

References

American Association of State Highway and Transportation Officials (AASHTO). 2004. Standard specifications for transportation materials and methods of sampling and testing. 24th edition.

American Society for Testing and Materials (ASTM). 2005. Standard classification of soils for engineering purposes. ASTM Standard D2487-00.

Cowardin, L.M., V. Carter, F.C. Golet, and E.T. LaRoe. 1979. Classification of wetlands and deep-water habitats of the United States. U.S. Fish and Wildlife Service FWS/OBS-79/31.

Federal Register. July 13, 1994. Changes in hydric soils of the United States.

Federal Register. September 18, 2002. Hydric soils of the United States.

Hurt, G.W., and L.M. Vasilas, editors. Version 6.0, 2006. Field indicators of hydric soils in the United States.

National Research Council. 1995. Wetlands: Characteristics and boundaries.

Soil Survey Division Staff. 1993. Soil survey manual. Soil Conservation Service. U.S. Department of Agriculture Handbook 18. http://www.nrcs.usda.gov/wps/portal/nrcs/detail/national/soils/?cid=nrcs142p2_054262

Soil Survey Staff. 1999. Soil taxonomy: A basic system of soil classification for making and interpreting soil surveys. 2nd edition. Natural Resources Conservation Service, U.S. Department of Agriculture Handbook 436. http://www.nrcs.usda.gov/wps/portal/nrcs/detail/national/soils/?cid=nrcs142p2_053577

Soil Survey Staff. 2010. Keys to soil taxonomy. 11th edition. U.S. Department of Agriculture, Natural Resources Conservation Service. http://www.nrcs.usda.gov/wps/portal/nrcs/detail/national/soils/?cid=nrcs142p2_053580

Tiner, R.W., Jr. 1985. Wetlands of Delaware. U.S. Fish and Wildlife Service and Delaware Department of Natural Resources and Environmental Control, Wetlands Section.

United States Army Corps of Engineers, Environmental Laboratory. 1987. Corps of Engineers wetlands delineation manual. Waterways Experiment Station Technical Report Y-87-1.

United States Department of Agriculture, Natural Resources Conservation Service. National forestry manual. http://www.nrcs.usda.gov/wps/portal/nrcs/detail/soils/home/?cid=nrcs142p2_053374

United States Department of Agriculture, Natural Resources Conservation Service. National range and pasture handbook. http://www.nrcs.usda.gov/wps/portal/nrcs/detail/national/landuse/rangepasture/?cid=stelprdb1043084

United States Department of Agriculture, Natural Resources Conservation Service. National soil survey handbook, title 430-VI. http://www.nrcs.usda.gov/wps/portal/nrcs/detail/soils/scientists/?cid=nrcs142p2_054242

United States Department of Agriculture, Natural Resources Conservation Service. 2006. Land resource regions and major land resource areas of the United States, the Caribbean, and the Pacific Basin. U.S. Department of Agriculture Handbook 296. http://www.nrcs.usda.gov/wps/portal/nrcs/detail/national/soils/?cid=nrcs142p2_053624

United States Department of Agriculture, Soil Conservation Service. 1961. Land capability classification. U.S. Department of Agriculture Handbook 210. http://www.nrcs.usda.gov/Internet/FSE_DOCUMENTS/nrcs142p2_052290.pdf

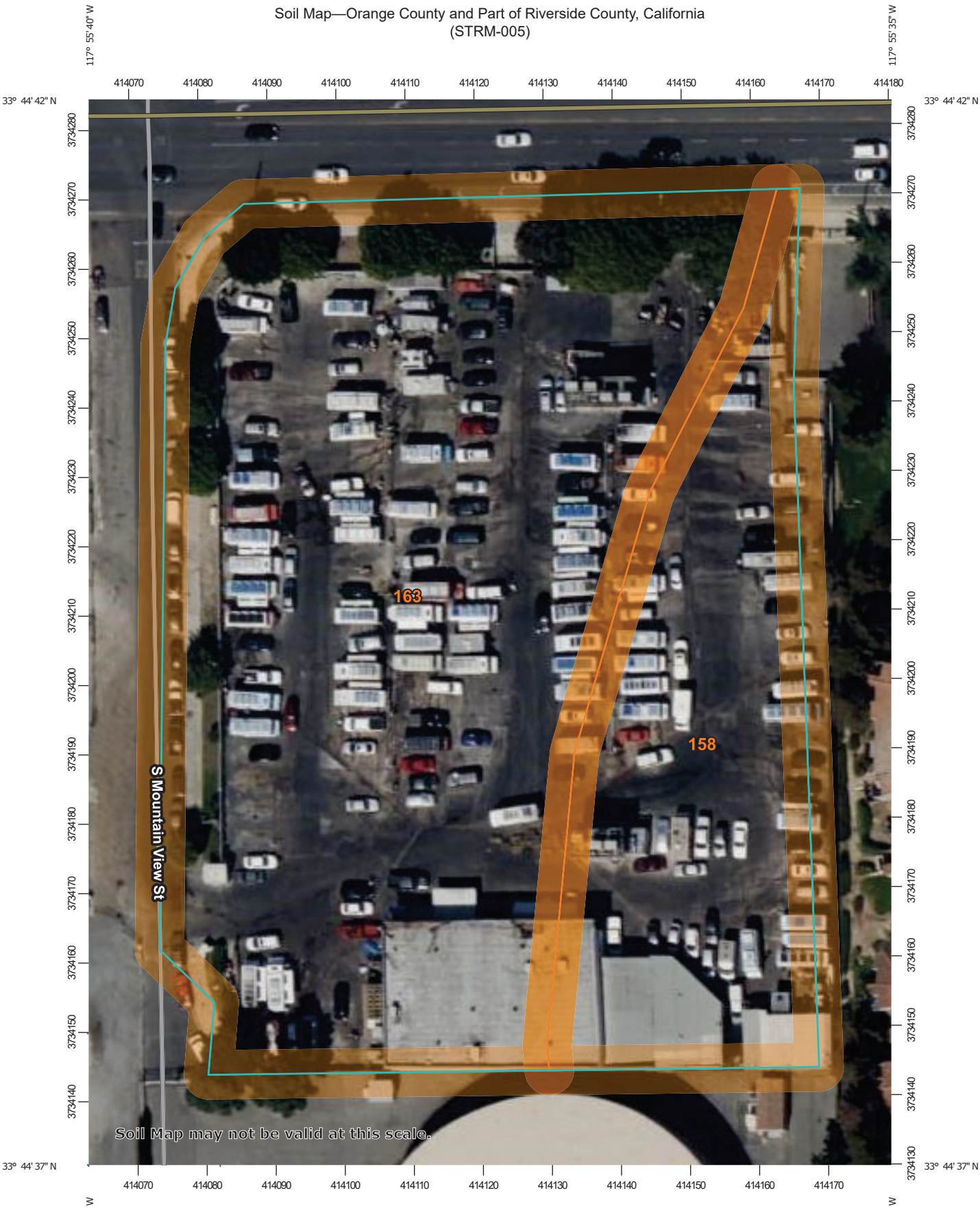

Map Scale: 1:750 if printed on A portrait (8.5" x 11") sheet.

N

Meters: 0 10 20 40 60

Feet: 0 35 70 140 210

Map projection: Web Mercator Corner coordinates: WGS84 Edge tics: UTM Zone 11N WGS84

MAP LEGEND

Area of Interest (AOI)
- Area of Interest (AOI)

Soils
- Soil Map Unit Polygons
- Soil Map Unit Lines
- Soil Map Unit Points

Special Point Features
- Blowout
- Borrow Pit
- Clay Spot
- Closed Depression
- Gravel Pit
- Gravelly Spot
- Landfill
- Lava Flow
- Marsh or swamp
- Mine or Quarry
- Miscellaneous Water
- Perennial Water
- Rock Outcrop
- Saline Spot
- Sandy Spot
- Severely Eroded Spot
- Sinkhole
- Slide or Slip
- Sodic Spot
- Spoil Area
- Stony Spot
- Very Stony Spot
- Wet Spot
- Other
- Special Line Features

Water Features
- Streams and Canals

Transportation
- Rails
- Interstate Highways
- US Routes
- Major Roads
- Local Roads

Background
- Aerial Photography

MAP INFORMATION

The soil surveys that comprise your AOI were mapped at 1:24,000.

Warning: Soil Map may not be valid at this scale.

Enlargement of maps beyond the scale of mapping can cause misunderstanding of the detail of mapping and accuracy of soil line placement. The maps do not show the small areas of contrasting soils that could have been shown at a more detailed scale.

Please rely on the bar scale on each map sheet for map measurements.

Source of Map: Natural Resources Conservation Service
Web Soil Survey URL:
Coordinate System: Web Mercator (EPSG:3857)

Maps from the Web Soil Survey are based on the Web Mercator projection, which preserves direction and shape but distorts distance and area. A projection that preserves area, such as the Albers equal-area conic projection, should be used if more accurate calculations of distance or area are required.

This product is generated from the USDA-NRCS certified data as of the version date(s) listed below.

Soil Survey Area: Orange County and Part of Riverside County, California
Survey Area Data: Version 18, Aug 30, 2024

Soil map units are labeled (as space allows) for map scales 1:50,000 or larger.

Date(s) aerial images were photographed: Mar 14, 2022—Mar 17, 2022

The orthophoto or other base map on which the soil lines were compiled and digitized probably differs from the background imagery displayed on these maps. As a result, some minor shifting of map unit boundaries may be evident.

Map Unit Legend

Map Unit Symbol	Map Unit Name	Acres in AOI	Percent of AOI
158	Hueneme fine sandy loam, drained	0.8	27.6%
163	Metz loamy sand	2.1	72.4%
Totals for Area of Interest		**2.9**	**100.0%**

Attachment E : Operation and Maintenance Plan

Operations and Maintenance (O&M) Plan

Water Quality Management Plan
for

201 S. Mountainview Street and 4320 West 1st Street

APN:188-021-10, 188-021-11, 188-021-12

Legal Description:

THE LAND REFERRED TO HEREIN BELOW IS SITUATED IN THE CITY OF SANTA ANA, COUNTY OF ORANGE, STATE OF CALIFORNIA, AND IS DESCRIBED AS FOLLOWS:

PARCEL A1:
THE EAST 290.00 FEET OF THE WEST 310.00 FEET OF THE NORTH 252.00 FEET OF THE EAST HALF OF THE NORTH HALF OF THE WEST HALF OF THE NORTHWEST QUARTER OF THE NORTHEAST QUARTER OF SECTION 16, IN TOWNSHIP 5 SOUTH, RANGE 10 WEST, IN THE RANCHO LOS BOLSAS, IN THE CITY OF SANTA ANA, COUNTY OF ORANGE, STATE OF CALIFORNIA, AS PER MAP RECORDED IN BOOK 51, PAGE 12 OF MISCELLANEOUS MAPS, RECORDS OF SAID ORANGE COUNTY.

PARCEL A2:
THE NORTH 30.00 FEET OF THE EASTERLY 20.00 FEET OF THE EAST HALF OF THE NORTH HALF OF THE WEST HALF OF THE NORTHWEST QUARTER OF THE NORTHEAST QUARTER OF SECTION 16, TOWNSHIP 5 SOUTH, RANGE 10 WEST IN THE RANCHO, LAS BOLSAS, IN THE CITY OF SANTA ANA, COUNTY OF ORANGE, STATE OF CALIFORNIA, AS SHOWN ON A MAP RECORDED IN BOOK 51, PAGE 12 OF MISCELLANEOUS MAPS, RECORDS OF ORANGE COUNTY, CALIFORNIA.

PARCEL B:
THE EAST HALF OF THE NORTH HALF OF THE WEST HALF OF THE NORTHWEST QUARTER OF THE NORTHEAST QUARTER OF SECTION 16, TOWNSHIP 5 SOUTH, RANGE 10 WEST, IN THE RANCHO LAS BOLSAS, IN THE CITY OF SANTA ANA, COUNTY OF ORANGE, STATE OF CALIFORNIA, AS SHOWN ON A MAP RECORDED IN BOOK 51, PAGE 12 OF MISCELLANEOUS MAPS, RECORDS OF ORANGE COUNTY, CALIFORNIA.

EXCEPTING THEREFROM THE SOUTHERLY 204.00 FEET.
ALSO EXCEPTING THEREFROM THE EASTERLY 20.00 FEET.
ALSO EXCEPTING THEREFROM THE EAST 290.00 FEET OF THE WEST 310.00 FEET OF THE NORTH 252.00 FEET.
FOR CONVEYANCING PURPOSES ONLY: APN 188-021-10 AS TO PARCEL B
188-021-11 AS TO PORTION PARCEL A
188-021-12 AS TO PORTION PARCEL A

Exhibit A, Operations and Maintenance Plan

BMP Applicable? Yes/ No	BMP Name and BMP Implementation, Maintenance, and Inspection Procedures	Implementation, Maintenance, and Inspection Frequency and Schedule	Person or Entity with Operation and Maintenance Responsibility
Non-Structural Source Control BMPs			
Yes	**N1. Education for Property Owners, Tenants, and Occupants** This will be addressed through educational materials. All included materials provide ways of mitigating storm water pollution in everyday activities associated with residents as well as employees of the property management company and their sub-contractors. Practical informational materials are provided to residents, occupants, or tenants to increase the public's understanding of storm water quality, sources of pollutants, and what they can do to reduce pollutants in storm water.	Owner/ Homeowner's Association (HOA) to provide educational materials, a copy of the approved WQMP and Operation & Maintenance Plan (O&M) to new property owners, tenants, occupants & employees, at time of hire and/ or purchase.	Warmington Residential/ HOA
No	**N2. Activity Restriction** Rules or guidelines for developments are established within the appropriate documents which prohibit activities that can result in discharges of pollutants.		
Yes	**N3. Common Area Landscaped Management** Specific practices are followed and ongoing maintenance is conducted to minimize erosion and over-irrigation, conserve water, and reduce pesticide and fertilizer applications.	Professional landscape company to conduct maintenance of landscaping to meet current water efficiency and keep plants healthy and bio areas maintained with proper soil amendments. Regular maintenance once a week and monthly inspection to determine deficiencies	Warmington Residential/ HOA will maintain or hire professionals to manage the upkeep of the project's landscaped areas.
Yes	**N4. BMP Maintenance** In order to ensure adequate and comprehensive BMP implementation, all responsible parties are identified for implementing all non-structural and structural BMPs, cleaning, inspection, and other maintenance activities are specified including responsible parties for conducting such activities.	Regular monthly Inspections/ Cleanings per manufacturer's specifications prior to October 1st (before the rainy season)	Warmington Residential/ HOA to hire professional BMP maintenance company to conduct regular inspections, repairs and cleaning per manufacturer's specifications.
No	**N5. Title 22 CCR Compliance**		

	Hazardous waste is managed properly through compliance with applicable Title 22 regulations. Hazardous materials or wastes will be generated, handled, transported, or disposed of in association with the project; measures are taken to comply with applicable local, state, and federal regulation to avoid harm to humans and the environment.		
No	**N6. Local Industrial Permit Compliance**		
Yes	**N7. Spill Contingency Plan** A Spill Contingency Plan is prepared by building operator or occupants for use by specified types of building or suite occupancies. The Spill Contingency Plan describes how the occupants will prepare for and respond to spills of hazardous materials. Plans typically describe stockpiling of cleanup materials, notification of responsible agencies, disposal of cleanup materials, documentation, etc.	Owner/ PMC to provide educational materials, a copy of the approved WQMP and Operation & Maintenance Plan (O&M) to new property owners, tenants, occupants & employees, at time of hire and/ or purchase.	Warmington Residential/ HOA
No	**N8. Underground Storage Tank Compliance**		
No	**N10. Uniform Fire Code Implementation**		
Yes	**N11. Common Area Litter Control** The proposed project will have various trash receptacles located near the common areas. Trash management and litter control procedures are specified within this report, including responsible parties, and implemented to reduce pollution of drainage water.	Once per week provide litter removal of site parking lot and landscape areas and to empty common area trash bins.	Warmington Residential/ HOA
Yes	**N12. Employee Training** Practical informational materials and/or training are provided to employees at the initial time of hiring by the PMC to increase their understanding of storm water quality, sources of pollutants, and their responsibility for reducing pollutants in storm water.	The distribution of these materials will be the responsibility of the PMC at the initial hiring of the employee.	Warmington Residential/ HOA
No	**N13. Housekeeping of Loading Docks**		
Yes	**N14. Common Area Catch Basin Inspection** In order to ensure adequate and comprehensive BMP implementation, all responsible parties are identified for implementing all non-structural and structural BMPs, cleaning, inspection, and other maintenance activities are specified including responsible parties for conducting such activities.	Regular monthly inspections of common areas where catch basins are located within the surrounding area and remove any trash/ debris.	Warmington Residential/ HOA
Yes	**N15. Street Sweeping Private Streets and Parking Lots** Regular sweeping is conducted to reduce pollution of drainage water.	An approved Private Street Sweeping Services Company on a weekly basis.	Warmington Residential/ HOA
No	**N16. Retail Gasoline Outlets**		

Structural Source Control BMPs			
Yes	**S1. Provide Storm Drain System Stenciling and Signage** Catch Basin Stenciling and Signage will be placed on all on-site catch basins to the satisfaction of the City Engineer.	Inspect and repair as needed all onsite storm drain stencilling & signage. Inspection should occur regularly once per month.	Warmington Residential/ HOA
No	**S2. Design and Construct Outdoor Material Storage Areas to Reduce Pollutant Introduction**		
Yes	**S3. Design and Construct Trash and Waste Storage Areas to Reduce Pollutant Introduction (trash enclosures)**	Inspect and repair as needed all trash enclosures. Inspection should occur regularly once per month.	Warmington Residential/ HOA
Yes	**S4. Use Efficient Irrigation Systems and Landscape Design** Site efficient irrigation and landscaping has been implemented by the project's landscape architect to the satisfaction of the City Engineer and Planning Department.	Owner/ PMC to provide maintenance of landscaping to meet current water efficiency standards, and keep plants healthily. Regular maintenance once a week and monthly inspection to determine any water deficiencies.	Warmington Residential/ HOA will maintain or hire professionals to manage the upkeep of the project's landscaped areas.
No	**S5. Protect Slopes and Channels and Provide Energy Dissipation**		
No	**S6. Loading Docks**		
No	**S7. Maintenance Bays**		
No	**S8. Vehicle Wash Areas**		
No	**S9. Outdoor Processing Areas**		
No	**S10. Equipment Wash Areas**		
No	**S11. Fueling Areas**		
No	**S12. Hillside Landscaping**		
No	**S13. Wash Water Controls for Food Preparation Area**		
No	**S14. Community Car Wash Racks**		

Treatment Control BMPs			
Yes	**Treatment Control BMP #1** **BIO-7 Biofiltration (Modular Wetlands System (MWS), Biofiltration Vault,** Refer to attached for specific BMP detail information pertaining to operation and maintenance.	Inspections/ Cleanings should occur at least three times per year and before the start of the rainy season (October 1st). Refer to manufacturer's specifications.	Warmington Residential/ HOA will be required to hire a professional maintenance company to provide regular inspection, repairs and cleaning per manufacturer's specifications. All trash/ debris and loose sediment/ silt shall be removed per manufacturer's specifications.
Yes	**Treatment Control BMP #2** **Storm Water Sump Pump** **Model F-31U, 1 HP, 230V**	Inspections/ cleanings should occur at least two times per year and before the start of the rainy season (October 1st). Scheduled inspections by technician should occur at least once per year/ per manufacturer's recommendation.	Warmington Residential/ HOA to conduct regular inspections and cleanings of pump station area, report performance deficiencies, and schedule regular inspections by a professional technician.

Required Permits

This section must list any permits required for the implementation, operation, and maintenance of the BMPs. Possible examples are:

- No required permits are needed for the implementation, operation, and maintenance of the previously listed BMPs.

Forms to Record the BMP Implementation, Maintenance, and Inspection

The form that will be used to record the implementation, maintenance, and inspection of the BMPs is attached.

Recordkeeping

All records must be maintained for at least five (5) years and must be made available for review upon request.

Notice to Owner:

The property is currently owned by Warmington Residential. The Owner will be responsible for the long term maintenance of the project's storm water facilities and conformance to this WQMP after construction is complete.

The owner is aware of the maintenance responsibilities of the proposed BMPs. A funding mechanism is in place to maintain the BMPs at the frequency stated in the WQMP.

RECORD OF BMP IMPLEMENTATION, MAINTENANCE, AND INSPECTION

Today's Date: _____

Name of Person Performing Activity: _____
(Printed)

Signature: _____

BMP Name (As Shown on O&M Plan)	Brief Description of Implementation, Maintenance, and Inspection Activity Performed

Operation & Maintenance Plan - Attachments

- Modular Wetlands System Linear – Maintenance Guidelines
- Modular Wetlands System Linear – Maintenance Schedule
- Modular Wetlands System Linear – Maintenance Cost

Bio Clean

A Forterra Company

Bio Clean CPS

A Stormwater Trash Capture Solution

OPERATION & MAINTENANCE MANUAL

5796 Armada Drive Suite 250 | Carlsbad, CA 92008 | 855.566.3938

stormwater@forterrabp.com | biocleanenvironmental.com

OPERATION & MAINTENANCE

CPS devices should be maintained by individuals who are trained in proper disposal procedures, confined space entry and traffic safety regulations. When servicing a Bio Clean CPS device be sure to follow all safety and traffic control protocols as well as wearing all proper personal protection equipment such as gloves, safety glasses, hard-hat, safety vest and work boots.

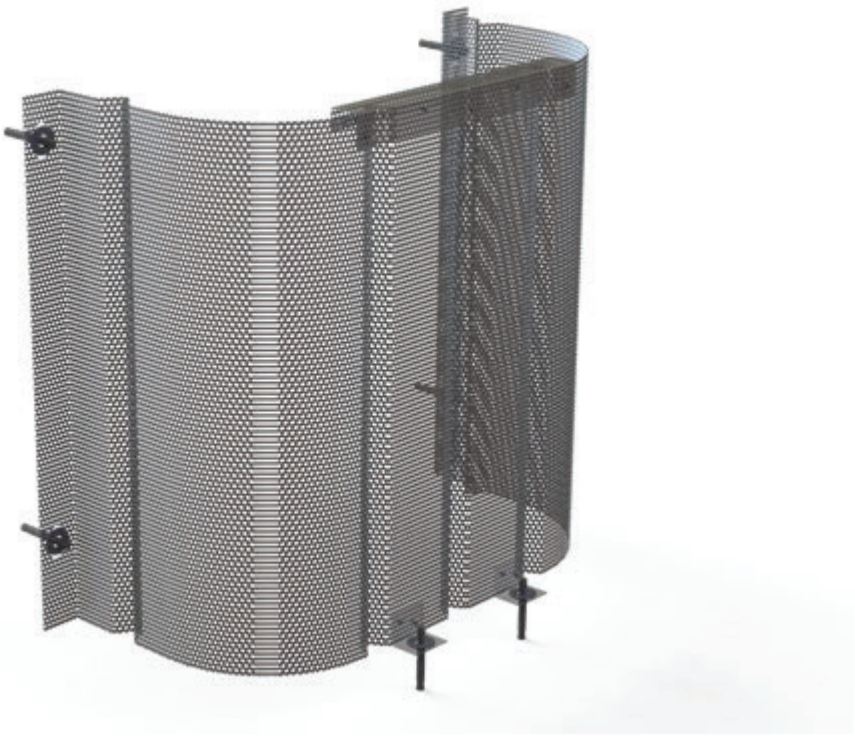

Visual Inspection

1. Begin by inspecting the inflow of the catch basin where the Bio Clean CPS device is located. Check for any obstructions to inflow of the CB unit. If any large obstructions are found, have them removed. Once the inflow inspection is completed, remove the man-hole cover for further inspection. (Note: Confined Space Entry Procedures may apply if trained personnel intend to enter the interior space of any Catch Basin. Please follow all applicable confined space entry procedures)

2. Remove the manhole cover and visually estimate the amount and types of debris found in the CB unit. Look for any visual signs of damage that may compromise the CB unit to function properly. Inspect for any standing water in the CB unit as well as for large amounts of sediment and debris surrounding the CPS device. If standing water and high sediment volume is found, remove water, sediment and debris by vacuum truck or by other debris removal methods.

Cleaning Procedures and Frequencies

1. Like all other storm water BMP's, Bio Clean CPS devices require periodic maintenance. Routine inspection and maintenance intervals for all CPS devices are typically twice per year for inspections and once per year for maintenance service. Bio Clean CPS devices may require more frequent maintenance service if the device is located in a high debris loading drainage area, such as certain downtown areas, retail/restaurant, or residential areas where a significant amount of vegetation/foliage is located. In such cases, Bio Clean CPS devices may require more frequent inspection and maintenance service, which could range from twice per year to monthly inspection and maintenance service, depending on pollutant load conditions.

2. To begin Bio Clean CPS cleaning procedures, conduct a visual inspection of the CPS device and the surrounding area to ensure a safe working environment. Setup appropriate barriers and signage as necessary to establish a work zone surrounding the catch basin. Once the work zone has been established, remove the manhole cover from the catch basin.

3. Once the manhole cover is removed from the basin the Bio Clean CPS is ready for servicing. All debris can be removed by either a vacuum truck or manually removing sediment and debris by hand.

4. Bio Clean CPS devices shall be cleaned using a pressure washer as may be necessary if any materials are found to cause occlusion or clogging of the screen.

Disposal

1. All trash and debris removed from the Bio Clean CPS unit shall be disposed of in accordance with local, state and federal regulation.

2. Solid waste disposal can be coordinated with local landfills. Liquids may need to be disposed of by wastewater treatment plant, municipal vacuum truck decant facility or approved facility.

For Maintenance Services or Information Please Contact Us At:
760-433-7640
Or Email:
info@biocleanenvironmental.com

BioMediaGREEN

Modular Wetland System (MWS) – LINEAR

Maintenance Cost (per acre)

MWS - LINEAR	Cleaning Required	Yearly Maintenance Cost
Year 1	1) Clean Inlet Filter (6 Month Intervals) 2) Vacuum Catch Basin (12 Month Intervals) 3) Replace BioMedia Green Filter Media	$80 / each (x2) $350 / year $500 / year
Year 2	1) Clean Inlet Filter (6 Month Intervals) 2) Vacuum Catch Basin (12 Month Intervals) 3) Replace BioMedia Green Filter Media	$80 / each (x2) $350 / year $500 / year
Year 3	1) Clean Inlet Filter (6 Month Intervals) 2) Vacuum Catch Basin (12 Month Intervals) 3) Replace BioMedia Green Filter Media	$80 / each (x2) $350 / year $500 / year
Year 4	1) Clean Inlet Filter (6 Month Intervals) 2) Vacuum Catch Basin (12 Month Intervals) 3) Replace BioMedia Green Filter Media	$80 / each (x2) $350 / year $500 / year
Year 5	1) Clean Inlet Filter (6 Month Intervals) 2) Vacuum Catch Basin (12 Month Intervals) 3) Replace BioMedia Green Filter Media	$80 / each (x2) $350 / year $500 / year
Year 6	1) Clean Inlet Filter (6 Month Intervals) 2) Vacuum Catch Basin (12 Month Intervals) 3) Replace BioMedia Green Filter Media	$80 / each (x2) $350 / year $500 / year
Year 7	1) Clean Inlet Filter (6 Month Intervals) 2) Vacuum Catch Basin (12 Month Intervals) 3) Replace BioMedia Green Filter Media	$80 / each (x2) $350 / year $500 / year
Year 8	1) Clean Inlet Filter (6 Month Intervals) 2) Vacuum Catch Basin (12 Month Intervals) 3) Replace BioMedia Green Filter Media	$80 / each (x2) $350 / year $500 / year
Year 9	1) Clean Inlet Filter (6 Month Intervals) 2) Vacuum Catch Basin (12 Month Intervals) 3) Replace BioMedia Green Filter Media	$80 / each (x2) $350 / year $500 / year
Year 10	1) Clean Inlet Filter (6 Month Intervals) 2) Vacuum Catch Basin (12 Month Intervals) 3) Replace BioMedia Green Filter Media 4) Remove & Replace Wetland Plants & Media	$80 / each (x2) $350/ year $500 / year $2,500
Total 1 - 10	**Total Maintenance Cost Over 10 Years**	**$11,800**
Average Yearly Cost	**Assumes 10 Year Replacement of Wetland Media.**	**$1,180 / Year**

WWW.MODULARWETLANDS.COM

P: 760-433-7640

Maintenance Guidelines for Modular Wetland System - Linear

Maintenance Summary

- Remove Trash from Screening Device – average maintenance interval is 6 to 12 months.
  - (*5 minute average service time*).
- Remove Sediment from Separation Chamber – average maintenance interval is 12 to 24 months.
  - (*10 minute average service time*).
- Replace Cartridge Filter Media – average maintenance interval 12 to 24 months.
  - (*10-15 minute per cartridge average service time*).
- Replace Drain Down Filter Media – average maintenance interval is 12 to 24 months.
  - (*5 minute average service time*).
- Trim Vegetation – average maintenance interval is 6 to 12 months.
  - (*Service time varies*).

System Diagram

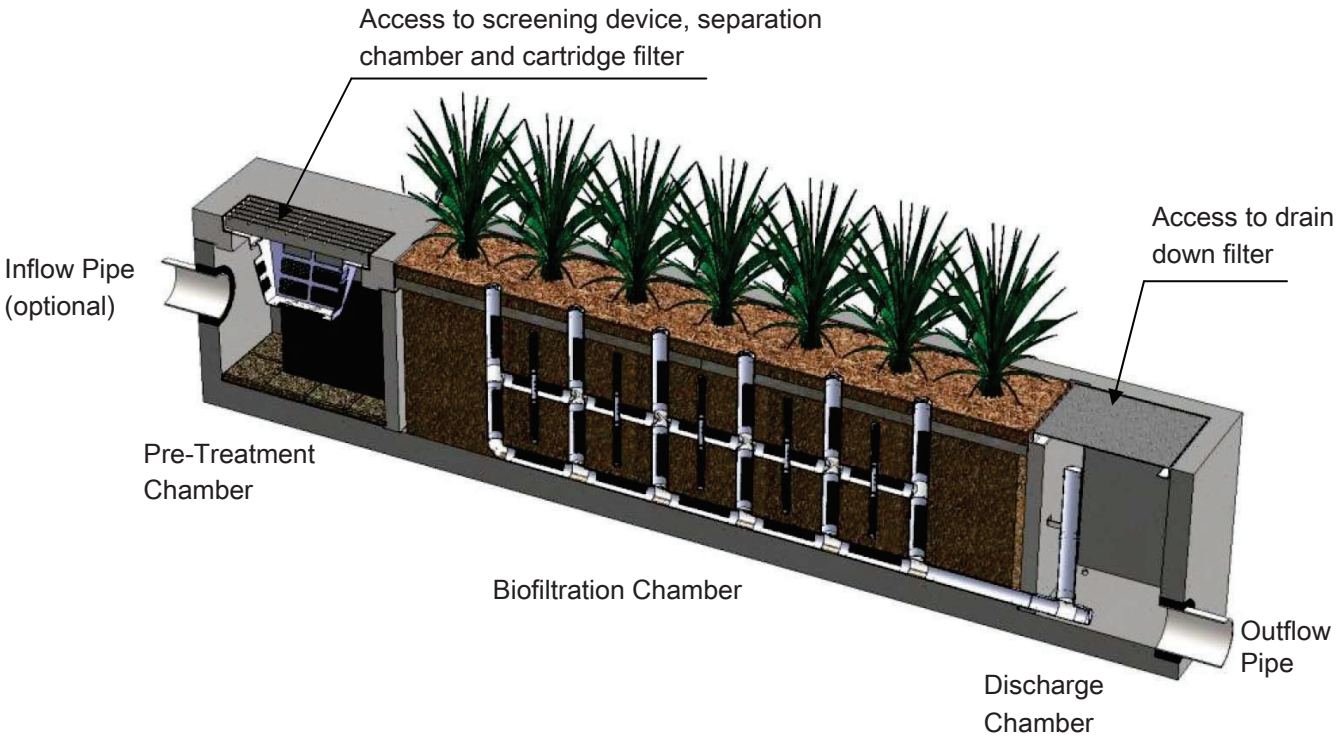

Maintenance Procedures

Screening Device

1. Remove grate or manhole cover to gain access to the screening device in the Pre-Treatment Chamber. Vault type units do not have screening device. Maintenance can be performed without entry.
2. Remove all pollutants collected by the screening device. Removal can be done manually or with the use of a vacuum truck. The hose of the vacuum truck will not damage the screening device.
3. Screening device can easily be removed from the Pre-Treatment Chamber to gain access to separation chamber and media filters below. Replace grate or manhole cover when completed.

Separation Chamber

1. Perform maintenance procedures of screening device listed above before maintaining the separation chamber.
2. With a pressure washer spray down pollutants accumulated on walls and cartridge filters.
3. Vacuum out Separation Chamber and remove all accumulated pollutants. Replace screening device, grate or manhole cover when completed.

Cartridge Filters

1. Perform maintenance procedures on screening device and separation chamber before maintaining cartridge filters.
2. Enter separation chamber.
3. Unscrew the two bolts holding the lid on each cartridge filter and remove lid.
4. Remove each of 4 to 8 media cages holding the media in place.
5. Spray down the cartridge filter to remove any accumulated pollutants.
6. Vacuum out old media and accumulated pollutants.
7. Reinstall media cages and fill with new media from manufacturer or outside supplier. Manufacturer will provide specification of media and sources to purchase.
8. Replace the lid and tighten down bolts. Replace screening device, grate or manhole cover when completed.

Drain Down Filter

1. Remove hatch or manhole cover over discharge chamber and enter chamber.
2. Unlock and lift drain down filter housing and remove old media block. Replace with new media block. Lower drain down filter housing and lock into place.
3. Exit chamber and replace hatch or manhole cover.

Maintenance Notes

1. Following maintenance and/or inspection, it is recommended the maintenance operator prepare a maintenance/inspection record. The record should include any maintenance activities performed, amount and description of debris collected, and condition of the system and its various filter mechanisms.

2. The owner should keep maintenance/inspection record(s) for a minimum of five years from the date of maintenance. These records should be made available to the governing municipality for inspection upon request at any time.

3. Transport all debris, trash, organics and sediments to approved facility for disposal in accordance with local and state requirements.

4. Entry into chambers may require confined space training based on state and local regulations.

5. No fertilizer shall be used in the Biofiltration Chamber.

6. Irrigation should be provided as recommended by manufacturer and/or landscape architect. Amount of irrigation required is dependent on plant species. Some plants may require irrigation.

Maintenance Procedure Illustration

Screening Device

The screening device is located directly under the manhole or grate over the Pre-Treatment Chamber. It's mounted directly underneath for easy access and cleaning. Device can be cleaned by hand or with a vacuum truck.



Separation Chamber

The separation chamber is located directly beneath the screening device. It can be quickly cleaned using a vacuum truck or by hand. A pressure washer is useful to assist in the cleaning process.







Cartridge Filters

The cartridge filters are located in the Pre-Treatment chamber connected to the wall adjacent to the biofiltration chamber. The cartridges have removable tops to access the individual media filters. Once the cartridge is open media can be easily removed and replaced by hand or a vacuum truck.

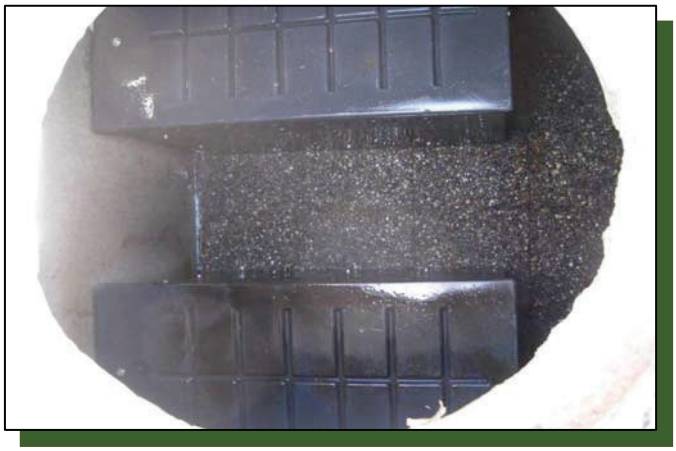





Drain Down Filter

The drain down filter is located in the Discharge Chamber. The drain filter unlocks from the wall mount and hinges up. Remove filter block and replace with new block.



Trim Vegetation

Vegetation should be maintained in the same manner as surrounding vegetation and trimmed as needed. No fertilizer shall be used on the plants. Irrigation per the recommendation of the manufacturer and or landscape architect. Different types of vegetation requires different amounts of irrigation.





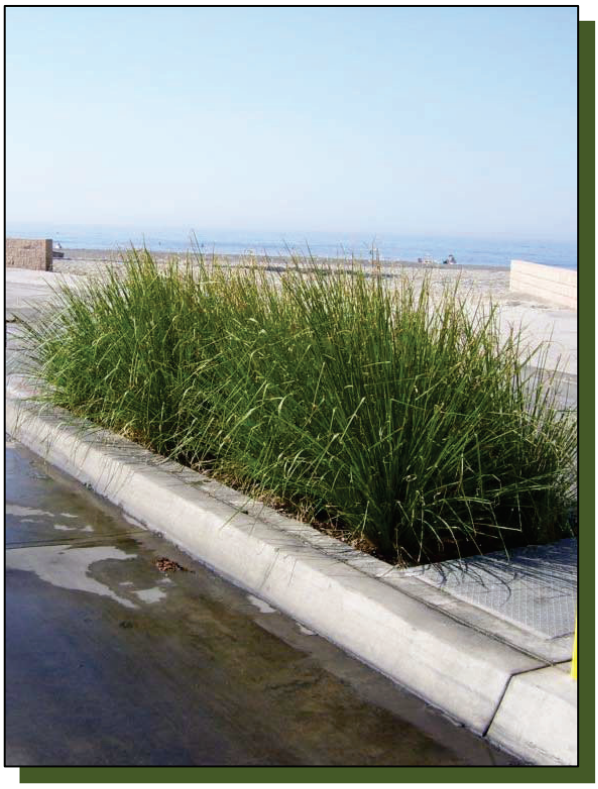



Inspection Form



Modular Wetland System, Inc.
P. 760.433-7640
F. 760-433-3176
E. Info@modularwetlands.com

www.modularwetlands.com

Inspection Report
Modular Wetlands System

Project Name _____

Project Address _____
(city) (Zip Code)

Owner / Management Company _____

Contact _____ Phone ( ) –

Inspector Name _____ Date ____/____/____ Time _____ AM / PM

Type of Inspection ☐ Routine ☐ Follow Up ☐ Complaint ☐ Storm Storm Event in Last 72-hours? ☐ No ☐ Yes

Weather Condition _____ Additional Notes _____

For Office Use Only
(Reviewed By)
(Date)
Office personnel to complete section to the left.

Inspection Checklist

Modular Wetland System Type (Curb, Grate or UG Vault): _____ Size (22', 14' or etc.): _____

Structural Integrity:	**Yes**	**No**	**Comments**
Damage to pre-treatment access cover (manhole cover/grate) or cannot be opened using normal lifting pressure?			
Damage to discharge chamber access cover (manhole cover/grate) or cannot be opened using normal lifting pressure?			
Does the MWS unit show signs of structural deterioration (cracks in the wall, damage to frame)?			
Is the inlet/outlet pipe or drain down pipe damaged or otherwise not functioning properly?			
Working Condition:			
Is there evidence of illicit discharge or excessive oil, grease, or other automobile fluids entering and clogging the unit?			
Is there standing water in inappropriate areas after a dry period?			
Is the filter insert (if applicable) at capacity and/or is there an accumulation of debris/trash on the shelf system?			
Does the depth of sediment/trash/debris suggest a blockage of the inflow pipe, bypass or cartridge filter? If yes, specify which one in the comments section. Note depth of accumulation in in pre-treatment chamber.			Depth:
Does the cartridge filter media need replacement in pre-treatment chamber and/or discharge chamber?			Chamber:
Any signs of improper functioning in the discharge chamber? Note issues in comments section.			
Other Inspection Items:			
Is there an accumulation of sediment/trash/debris in the wetland media (if applicable)?			
Is it evident that the plants are alive and healthy (if applicable)? Please note Plant Information below.			
Is there a septic or foul odor coming from inside the system?			

Waste:	**Yes**	**No**
Sediment / Silt / Clay		
Trash / Bags / Bottles		
Green Waste / Leaves / Foliage		

Recommended Maintenance	
No Cleaning Needed	
Schedule Maintenance as Planned	
Needs Immediate Maintenance	

Plant Information	
Damage to Plants	
Plant Replacement	
Plant Trimming	

Additional Notes: _____

2972 San Luis Rey Road, Oceanside, CA 92058 P (760) 433-7640 F (760) 433-3176

Maintenance Report



Modular Wetland System, Inc.
P. 760.433-7640
F. 760-433-3176
E. Info@modularwetlands.com

www.modularwetlands.com

Cleaning and Maintenance Report
Modular Wetlands System

Project Name _____

Project Address _____
(city) (Zip Code)

Owner / Management Company _____

Contact _____ Phone ( ) –

Inspector Name _____ Date ____/____/____ Time _____ AM / PM

Type of Inspection ☐ Routine ☐ Follow Up ☐ Complaint ☐ Storm Storm Event in Last 72-hours? ☐ No ☐ Yes

Weather Condition _____ Additional Notes _____

For Office Use Only
(Reviewed By)
(Date)
Office personnel to complete section to the left.

Site Map #	GPS Coordinates of Insert	Manufacturer / Description / Sizing	Trash Accumulation	Foliage Accumulation	Sediment Accumulation	Total Debris Accumulation	Condition of Media 25/50/75/100 (will be changed @ 75%)	Operational Per Manufactures' Specifications (If not, why?)
	Lat: Long:	MWS Catch Basins						
		MWS Sedimentation Basin						
		Media Filter Condition						
		Plant Condition						
		Drain Down Media Condition						
		Discharge Chamber Condition						
		Drain Down Pipe Condition						
		Inlet and Outlet Pipe Condition						

Comments:

2972 San Luis Rey Road, Oceanside, CA 92058 P. 760.433.7640 F. 760.433.3176

Modular Wetland System - Linear (MWS-Linear)

Maintenance Schedule



MWS - LINEAR	Cleaning Required	Est. Cleaning Time
Year 1	1) Clean Inlet Filter (6 Month Intervals) (does not apply to vault type) 2) Vacuum Catch Basin (12 Month Intervals) 3) Replace BioMedia Green Filter Media (12 month Intervals)	10 Minutes 25 Minutes 45 Minutes
Year 2	1) Clean Inlet Filter (6 Month Intervals) (does not apply to vault type) 2) Vacuum Catch Basin (12 Month Intervals) 3) Replace BioMedia Green Filter Media (12 month Intervals)	10 Minutes 25 Minutes 45 Minutes
Year 3	1) Clean Inlet Filter (6 Month Intervals) (does not apply to vault type) 2) Vacuum Catch Basin (12 Month Intervals) 3) Replace BioMedia Green Filter Media (12 month Intervals)	10 Minutes 25 Minutes 45 Minutes
Year 4	1) Clean Inlet Filter (6 Month Intervals) (does not apply to vault type) 2) Vacuum Catch Basin (12 Month Intervals) 3) Replace BioMedia Green Filter Media (12 month Intervals)	10 Minutes 25 Minutes 45 Minutes
Year 5	1) Clean Inlet Filter (6 Month Intervals) (does not apply to vault type) 2) Vacuum Catch Basin (12 Month Intervals) 3) Replace BioMedia Green Filter Media (12 month Intervals)	10 Minutes 25 Minutes 45 Minutes
Year 6	1) Clean Inlet Filter (6 Month Intervals) (does not apply to vault type) 2) Vacuum Catch Basin (12 Month Intervals) 3) Replace BioMedia Green Filter Media (12 month Intervals)	10 Minutes 25 Minutes 45 Minutes
Year 7	1) Clean Inlet Filter (6 Month Intervals) (does not apply to vault type) 2) Vacuum Catch Basin (12 Month Intervals) 3) Replace BioMedia Green Filter Media (12 month Intervals)	10 Minutes 25 Minutes 45 Minutes
Year 8	1) Clean Inlet Filter (6 Month Intervals) (does not apply to vault type) 2) Vacuum Catch Basin (12 Month Intervals) 3) Replace BioMedia Green Filter Media (12 month Intervals)	10 Minutes 25 Minutes 45 Minutes
Year 9…	1) Clean Inlet Filter (6 Month Intervals) (does not apply to vault type) 2) Vacuum Catch Basin (12 Month Intervals) 3) Replace BioMedia Green Filter Media (12 month Intervals)	10 Minutes 25 Minutes 45 Minutes
Year 15	1) Clean Inlet Filter (6 Month Intervals) (does not apply to vault type) 2) Vacuum Catch Basin (12 Month Intervals) 3) Replace BioMedia Green Filter Media (12 month Intervals) 4) Remove & Replace Wetland Plants & Media (every 10-20 years)	10 Minutes 25 Minutes 45 Minutes 6 to 8 Hours
Procedure 1 **Clean Inlet Filter** (does not apply to vault type) 	Modular Wetland Systems, Inc. recommends the catch basin filter be inspected and cleaned a minimum of once every six months and replacement of hydrocarbon booms once a year. The procedure is easily done with the use of any standard vacuum truck. Before doing maintenance please use proper safety and traffic control. 1) Remove grate or manhole, remove the deflector shield (grate type only). Note: entry into an underground stormwater vault such as an inlet vault requires certification in confined space training. 2) Remove all trash, debris, organics, and sediments collected by the inlet filter insert either manually or with the use of a vactor truck. 3) Evaluate hydrocarbon boom. If the boom is filled with hydrocarbons and oils it should be replaced. Attach new boom to basket with plastic ties through pre-drilled holes in basket. Place the deflector shield (grate type only) back into the filter. Hydrocarbon boom should be replaced annually. (The hydrocarbon boom may be classified as hazardous material and will have to be picked up and disposed of as hazardous waste).	**10 Minutes**

Procedure 2 **Vacuum Catch Basin** 	Modular Wetland Systems, Inc. recommends the separation chamber be inspected and cleaned a minimum of once a year. The procedure is easily done with the use of any standard vacuum truck. Before doing maintenance please use proper safety and traffic control. 1) Remove grate or manhole. 2) Remove catch basin filter. 3) Spray down pollutants accumulated on cartridge filters and catch basin walls. 4) Vacuum out sediments and debris accumulated on catch basin floor. 5) Replace catch basin filter, and replace grate or manhole cover.	**25 Minutes**
Procedure 3 **Replace BioMedia Green Media Filter** 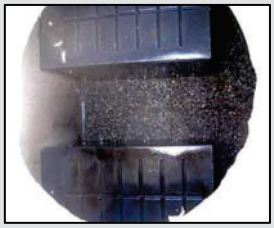  	Modular Wetland Systems, Inc. recommends the BioMediaGREEN Cartridge Filters be inspected and cleaned a minimum of once a year. The procedure will require prior maintenance of catch basin. Before doing maintenance please use proper safety and traffic control. 1) Remove grate, remove catch basin filter. 2) Perform maintenance activities on catch basin. 3) Enter separation chamber, unscrew the two bolts holding the lid on the cartridge filter. This will expose the 14 pieces of BioMediaGREEN in each cartridge. 4) Evaluate media condition, replace if necessary. If the spaces between the media are filled with sediment and the surface of the media is dark brown or black the media should be replaced. The old media can be removed by hand by pulling the media pieces up out of the cartridge and taking them out of the catch basin. 5) Once all old media is removed, spray down the interior of the cartridge and vacuum out accumulated debris. 6) Use new pieces of BioMediaGREEN and slide down over the perforated PVC risers. The media will only go in one way for easy installation. Replace media over all risers. 5) Replace cartridge filter lid, replace catch basin filter, and replace grate or manhole cover. Modular Wetland Systems, Inc. recommends the drain down filter be inspected and maintained a minimum of once a year. 1) Open hatch of discharge chamber, enter chamber. 2) Unlatch fiberglass cover, remove media block, replace with new block, replace and latch cover. 3) Exit chamber, close and lock down the hatch. BioMediaGREEN	**45 Minutes**
Procedure 4 **Replace Wetland Media** 	Modular Wetland Systems, Inc. recommends the wetland media be evaluated every 3 to 5 years to test flow rate. The media life is approximately 15 to 20 years. The wetland media is an expanded shale that can be ordered from the manufacturer or independent supplier. If the flow through the wetland filter is decreasing the internal inflow and outflow pipes leading to and from the wetland chamber can be jetted. If the flow through the wetland is still minimal then the media may need to be replaced. To replace the media the following steps are required. Before doing maintenance please use proper safety and traffic control. 1) Remove plants and dispose. Have new plants standing ready to plant. 2) Use a larger vacuum truck to remove the media from the wetland chamber. 3) Spray down the chamber walls and remove all sediment and water. 4) Replace with new wetland media and plant plants.	**6 to 8 Hours**

Attachment F : Notice of Transfer of Responsibilit

City of Santa Ana
Assigned Tracking No.
Water Quality Management Plan
Notice of Transfer of Responsibility

Submission of this Notice of Transfer of Responsibility constitutes notice to the _____ that responsibility for the Water Quality Management Plan ("WQMP") for the subject property identified below, and implementation of that plan, is being transferred from the Previous Owner (and his/her agent) of the site (or a portion thereof) to the New Owner, as further described below.

I. Previous Owner/Previous Responsible Party Information

Company/Individual Name		Contact Person	
Street Address		Title	
City	State	ZIP	Phone

II. Information About Site Transferred

Name of Project (if applicable)	
Title of WQMP Applicable to site:	
Street Address of Site (if applicable)	
Planning Area (PA) and/or Tract Number(s) for Site	Lot Numbers (if Site is a portion of a tract)
Date WQMP Prepared (and revised if applicable)	

III. New Owner/New Responsibility Party Information

Company/Individual Name		Contact Person	
Street Address		Title	
City	State	ZIP	Phone

IV. Information About Site Transferred

General Description of Site Transferred to New Owner	General Description of Portion of Project/Parcel Subject to WQMP Retained by Owner (if any)
Lot/Tract Numbers of Site Transferred to New Owner	
Remaining Lot/Tract Numbers Subject to WQMP Still Held by Owner (if any)	
Date of Ownership Transfer	

Note: When the Previous Owner is transferring a Site that is a portion of a larger project/parcel addressed by the WQMP, as opposed to the entire project/parcel addressed by the WQMP, the General Description of the Site transferred and the remainder of the project/parcel not transferred shall be set forth as maps attached to this notice. These maps shall show those portions of a project/parcel addressed by the WQMP that are transferred to the New Owner (the

Transferred Site), those portions retained by the Previous Owner, and those portions previously transferred by Previous Owner. Those portions retained by Previous Owner shall be labeled "Previous Owner," and those portions previously transferred by Previous Owner shall be labeled as "Previously Transferred."

V. Purpose of Notice of Transfer

The purposes of this Notice of Transfer of Responsibility are: 1) to track transfer of responsibility for implementation and amendment of the WQMP when property to which the WQMP is transferred from the Previous Owner to the New Owner, and 2) to facilitate notification to a transferee of property subject to a WQMP that such New Owner is now the Responsible Party of record for the WQMP for those portions of the site that it owns.

VI. Certifications

A. Previous Owner

I certify under penalty of law that I am no longer the owner of the Transferred Site as described in Section II above. I have provided the New Owner with a copy of the WQMP applicable to the Transferred Site that the New Owner is acquiring from the Previous Owner.

Printed Name of Previous Owner Representative	Title
Signature of Previous Owner Representative	Date

B. New Owner

I certify under penalty of law that I am the owner of the Transferred Site, as described in Section II above, that I have been provided a copy of the WQMP, and that I have informed myself and understand the New Owner's responsibilities related to the WQMP, its implementation, and Best Management Practices associated with it. I understand that by signing this notice, the New Owner is accepting all ongoing responsibilities for implementation and amendment of the WQMP for the Transferred Site, which the New Owner has acquired from the Previous Owner.

Printed Name of New Owner Representative	Title
Signature	Date

Attachment G : Educational Materials

The Ocean Begins at Your Front Door

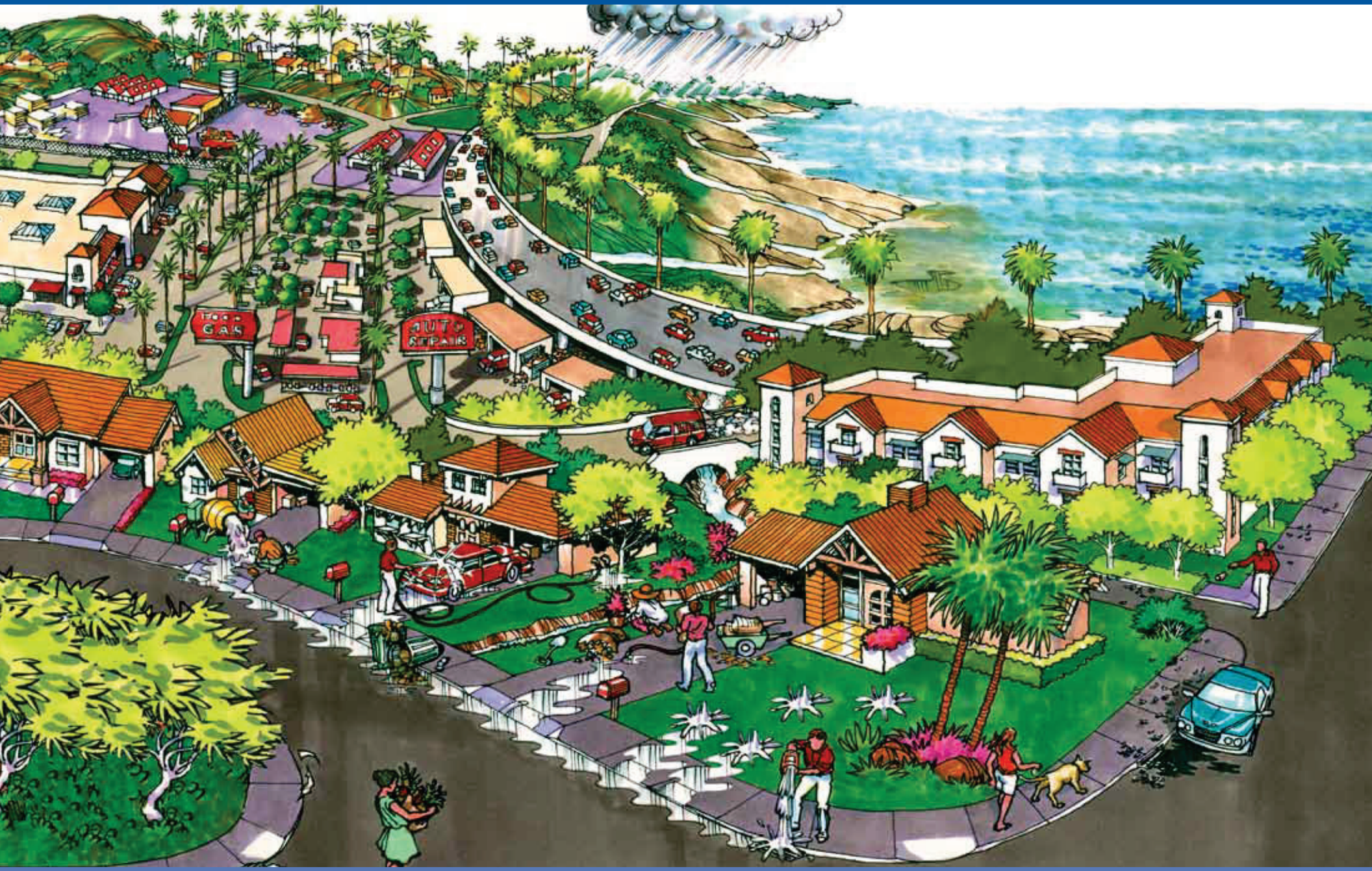

Never allow pollutants to enter the

street, gutter or storm drain!

Follow these simple steps to help reduce water pollution:

Household Activities

- Do not rinse spills with water. Use dry cleanup methods such as applying cat litter or another absorbent material, sweep and dispose of in the trash. Take items such as used or excess batteries, oven cleaners, automotive fluids, painting products and cathode ray tubes, like TVs and computer monitors, to a Household Hazardous Waste Collection Center (HHWCC).
- For a HHWCC near you call (714) 834-6752 or visit www.oclandfills.com.
- Do not hose down your driveway, sidewalk or patio to the street, gutter or storm drain. Sweep up debris and dispose of it in the trash.

Automotive

- Take your vehicle to a commercial car wash whenever possible. If you wash your vehicle at home, choose soaps, cleaners, or detergents labeled non-toxic, phosphate- free or biodegradable. Vegetable and citrus-based products are typically safest for the environment.
- Do not allow washwater from vehicle washing to drain into the street, gutter or storm drain. Excess washwater should be disposed of in the sanitary sewer (through a sink or toilet) or onto an absorbent surface like your lawn.
- Monitor your vehicles for leaks and place a pan under leaks. Keep your vehicles well maintained to stop and prevent leaks.
- Never pour oil or antifreeze in the street, gutter or storm drain. Recycle these substances at a service station, a waste oil collection center or used oil recycling center. For the nearest Used Oil Collection Center call 1-800-CLEANUP or visit www.1800cleanup.org.

Pool Maintenance

- Pool and spa water must be dechlorinated and free of excess acid, alkali or color to be allowed in the street, gutter or storm drain.
- When it is not raining, drain dechlorinated pool and spa water directly into the sanitary sewer.
- Some cities may have ordinances that do not allow pool water to be disposed of in the storm drain. Check with your city.

Landscape and Gardening

- Do not over-water. Water your lawn and garden by hand to control the amount of water you use or set irrigation systems to reflect seasonal water needs. If water flows off your yard onto your driveway or sidewalk, your system is over-watering. Periodically inspect and fix leaks and misdirected sprinklers.
- Do not rake or blow leaves, clippings or pruning waste into the street, gutter or storm drain. Instead, dispose of waste by composting, hauling it to a permitted landfill, or as green waste through your city's recycling program.
- Follow directions on pesticides and fertilizer, (measure, do not estimate amounts) and do not use if rain is predicted within 48 hours.
- Take unwanted pesticides to a HHWCC to be recycled. For locations and hours of HHWCC, call (714) 834-6752 or visit www.oclandfills.com.

Trash

- Place trash and litter that cannot be recycled in securely covered trash cans.
- Whenever possible, buy recycled products.
- Remember: Reduce, Reuse, Recycle.

Pet Care

- Always pick up after your pet. Flush waste down the toilet or dispose of it in the trash. Pet waste, if left outdoors, can wash into the street, gutter or storm drain.
- If possible, bathe your pets indoors. If you must bathe your pet outside, wash it on your lawn or another absorbent/permeable surface to keep the washwater from entering the street, gutter or storm drain.
- Follow directions for use of pet care products and dispose of any unused products at a HHWCC.

Common Pollutants

Home Maintenance

- Detergents, cleaners and solvents
- Oil and latex paint
- Swimming pool chemicals
- Outdoor trash and litter

Lawn and Garden

- Pet and animal waste
- Pesticides
- Clippings, leaves and soil
- Fertilizer

Automobile

- Oil and grease
- Radiator fluids and antifreeze
- Cleaning chemicals
- Brake pad dust

Even if you live miles from the Pacific Ocean, you may be unknowingly polluting it.

Dumping one quart of motor oil into a storm drain can contaminate 250,000 gallons of water.

Did You Know?

- Most people believe that the largest source of water pollution in urban areas comes from specific sources such as factories and sewage treatment plants. In fact, the largest source of water pollution comes from city streets, neighborhoods, construction sites and parking lots. This type of pollution is sometimes called “non-point source” pollution.
- There are two types of non-point source pollution: stormwater and urban runoff pollution.
- Stormwater runoff results from rainfall. When rainstorms cause large volumes of water to rinse the urban landscape, picking up pollutants along the way.
- Urban runoff can happen any time of the year when excessive water use from irrigation, vehicle washing and other sources carries trash, lawn clippings and other urban pollutants into storm drains.

Where Does It Go?

- Anything we use outside homes, vehicles and businesses – like motor oil, paint, pesticides, fertilizers and cleaners – can be blown or washed into storm drains.
- A little water from a garden hose or rain can also send materials into storm drains.
- Storm drains are separate from our sanitary sewer systems; unlike water in sanitary sewers (from sinks or toilets), water in storm drains is not treated before entering our waterways.

Sources of Non-Point Source Pollution

- Automotive leaks and spills.
- Improper disposal of used oil and other engine fluids.
- Metals found in vehicle exhaust, weathered paint, rust, metal plating and tires.
- Pesticides and fertilizers from lawns, gardens and farms.
- Improper disposal of cleaners, paint and paint removers.
- Soil erosion and dust debris from landscape and construction activities.
- Litter, lawn clippings, animal waste, and other organic matter.
- Oil stains on parking lots and paved surfaces.



The Effect on the Ocean



Non-point source pollution can have a serious impact on water quality in Orange County. Pollutants from the storm drain system can harm marine life as well as coastal and wetland habitats. They can also degrade recreation areas such as beaches, harbors and bays.

Stormwater quality management programs have been developed throughout Orange County to educate and encourage the public to protect water quality, monitor runoff in the storm drain system, investigate illegal dumping and maintain storm drains.

Support from Orange County residents and businesses is needed to improve water quality and reduce urban runoff pollution. Proper use and disposal of materials will help stop pollution before it reaches the storm drain and the ocean.



For More Information

California Environmental Protection Agency
www.calepa.ca.gov

- **Air Resources Board**
  www.arb.ca.gov
- **Department of Pesticide Regulation**
  www.cdpr.ca.gov
- **Department of Toxic Substances Control**
  www.dtsc.ca.gov
- **Integrated Waste Management Board**
  www.ciwmb.ca.gov
- **Office of Environmental Health Hazard Assessment**
  www.oehha.ca.gov
- **State Water Resources Control Board**
  www.waterboards.ca.gov

Earth 911 - Community-Specific Environmental Information 1-800-cleanup or visit www.1800cleanup.org

Health Care Agency's Ocean and Bay Water Closure and Posting Hotline
(714) 433-6400 or visit www.ocbeachinfo.com

Integrated Waste Management Dept. of Orange County (714) 834-6752 or visit www.oclandfills.com for information on household hazardous waste collection centers, recycling centers and solid waste collection

O.C. Agriculture Commissioner
(714) 447-7100 or visit www.ocagcomm.com

Stormwater Best Management Practice Handbook
Visit www.cabmphandbooks.com

UC Master Gardener Hotline
(714) 708-1646 or visit www.uccemg.com

The Orange County Stormwater Program has created and moderates an electronic mailing list to facilitate communications, take questions and exchange ideas among its users about issues and topics related to stormwater and urban runoff and the implementation of program elements. To join the list, please send an email to ocstormwaterinfo-join@list.ocwatersheds.com

Orange County Stormwater Program

Aliso Viejo	(949)	425-2535
Anaheim Public Works Operations	(714)	765-6860
Brea Engineering	(714)	990-7666
Buena Park Public Works	(714)	562-3655
Costa Mesa Public Services	(714)	754-5323
Cypress Public Works	(714)	229-6740
Dana Point Public Works	(949)	248-3584
Fountain Valley Public Works	(714)	593-4441
Fullerton Engineering Dept.	(714)	738-6853
Garden Grove Public Works	(714)	741-5956
Huntington Beach Public Works	(714)	536-5431
Irvine Public Works	(949)	724-6315
La Habra Public Services	(562)	905-9792
La Palma Public Works	(714)	690-3310
Laguna Beach Water Quality	(949)	497-0378
Laguna Hills Public Services	(949)	707-2650
Laguna Niguel Public Works	(949)	362-4337
Laguna Woods Public Works	(949)	639-0500
Lake Forest Public Works	(949)	461-3480
Los Alamitos Community Dev.	(562)	431-3538
Mission Viejo Public Works	(949)	470-3056
Newport Beach, Code & Water Quality Enforcement	(949)	644-3215
Orange Public Works	(714)	532-6480
Placentia Public Works	(714)	993-8245
Rancho Santa Margarita	(949)	635-1800
San Clemente Environmental Programs	(949)	361-6143
San Juan Capistrano Engineering	(949)	234-4413
Santa Ana Public Works	(714)	647-3380
Seal Beach Engineering	(562)	431-2527 x317
Stanton Public Works	(714)	379-9222 x204
Tustin Public Works/Engineering	(714)	573-3150
Villa Park Engineering	(714)	998-1500
Westminster Public Works/Engineering	(714)	898-3311 x446
Yorba Linda Engineering	(714)	961-7138
Orange County Stormwater Program	(877)	897-7455

Orange County 24-Hour
Water Pollution Problem Reporting Hotline
1-877-89-SPILL (1-877-897-7455)

On-line Water Pollution Problem Reporting Form
www.ocwatersheds.com

Printed on Recycled Paper

The Ocean Begins at Your Front Door





Preventing water pollution at your commercial/industrial site

Clean beaches and healthy creeks, rivers, bays and ocean are important to Orange County. However, many landscape and building maintenance activities can lead to water pollution if you're not careful. Paint, chemicals, plant clippings and other materials can be blown or washed into storm drains that flow to the ocean. Unlike water in sanitary sewers (from sinks and toilets), water in storm drains is not treated before entering our waterways.

You would never pour soap or fertilizers into the ocean, so why would you let them enter the storm drains? Follow these easy tips to help prevent water pollution.

Some types of industrial facilities are required to obtain coverage under the State General Industrial Permit. For more information visit: **www.swrcb.ca.gov/stormwater/industrial.html**

For more information, please call the **Orange County Stormwater Program** at **1-877-89-SPILL** (1-877-897-7455) or visit **www.ocwatersheds.com**

To report a spill, call the **Orange County 24-Hour Water Pollution Problem Reporting Hotline** at **1-877-89-SPILL** (1-877-897-7455).

For emergencies, dial 911.

RECYCLE USED OIL

Printed on Recycled Paper

Help Prevent Ocean Pollution:

Proper Maintenance Practices for Your Business

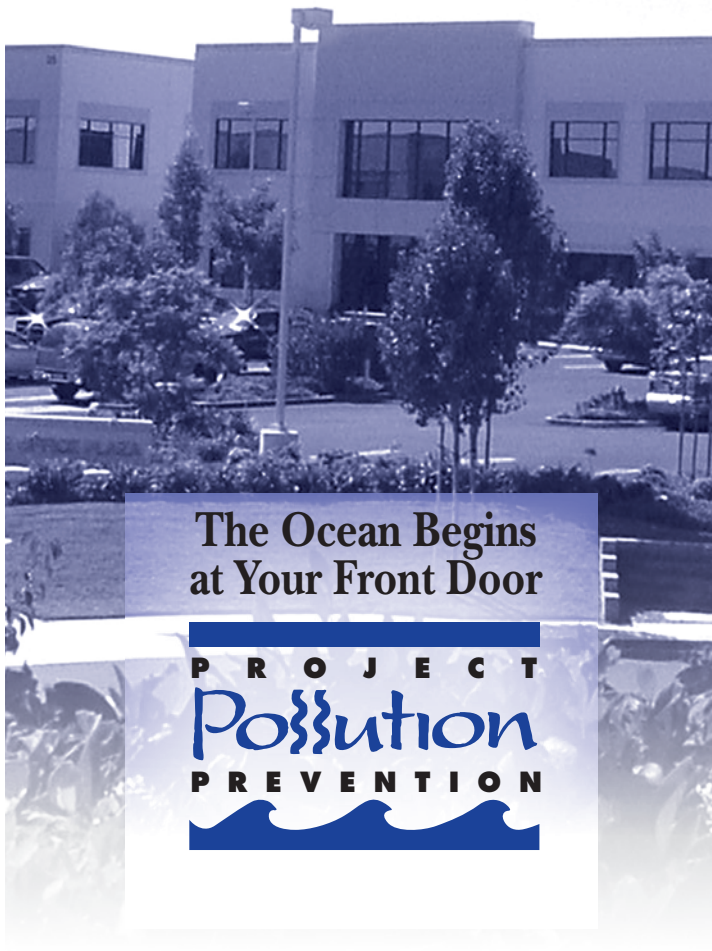

The Ocean Begins at Your Front Door

PROJECT Pollution PREVENTION

Proper Maintenance Practices for your Business

Landscape Maintenance

- Compost grass clippings, leaves, sticks and other vegetation, or dispose of it at a permitted landfill or in green waste containers. Do not dispose of these materials in the street, gutter or storm drain.
- Irrigate slowly and inspect the system for leaks, overspraying and runoff. Adjust automatic timers to avoid overwatering.
- Follow label directions for the use and disposal of fertilizers and pesticides.
- Do not apply pesticides or fertilizers if rain is expected within 48 hours or if wind speeds are above 5 mph.
- Do not spray pesticides within 100 feet of waterways.
- Fertilizers should be worked into the soil rather than dumped onto the surface.
- If fertilizer is spilled on the pavement or sidewalk, sweep it up immediately and place it back in the container.

Building Maintenance

- Never allow washwater, sweepings or sediment to enter the storm drain.
- Sweep up dry spills and use cat litter, towels or similar materials to absorb wet spills. Dispose of it in the trash.
- If you wash your building, sidewalk or parking lot, you **must** contain the water. Use a shop vac to collect the water and contact your city or sanitation agency for proper disposal information. Do not let water enter the street, gutter or storm drain.
- Use drop cloths underneath outdoor painting, scraping, and sandblasting work, and properly dispose of materials in the trash.
- Use a ground cloth or oversized tub for mixing paint and cleaning tools.
- Use a damp mop or broom to clean floors.
- Cover dumpsters to keep insects, animals, rainwater and sand from entering. Keep the area around the dumpster clear of trash and debris. Do not overfill the dumpster.
- Call your trash hauler to replace leaking dumpsters.
- Do not dump any toxic substance or liquid waste on the pavement, the ground, or near a storm drain. Even materials that seem harmless such as latex paint or biodegradable cleaners can damage the environment.

NEVER DISPOSE OF ANYTHING IN THE STORM DRAIN.

- Recycle paints, solvents and other materials. For more information about recycling and collection centers, visit **www.oclandfills.com**.
- Store materials indoors or under cover and away from storm drains.
- Use a construction and demolition recycling company to recycle lumber, paper, cardboard, metals, masonry, carpet, plastic, pipes, drywall, rocks, dirt, and green waste. For a listing of construction and demolition recycling locations in your area, visit **www.ciwmb.ca.gov/recycle.**
- Properly label materials. Familiarize employees with Material Safety Data Sheets.

PROJECT Pollution PREVENTION

HOMEOWNER TIPS
PROTECTING WATER

Before Buying Pest Control Products

- Identify the pest.
- Decide if pest control products are the best control measure or if there are alternatives available.
- Are integrated pest management guidelines available for this pest?
- Read the product label:
  - Is the pest listed on the label?
  - Is it the best product for the pest?

Before Mixing Your Sprayer



- Read the label carefully.
- Buy only enough pesticide to treat the area affected by the pest.
- Check the weather and don't apply if it's windy or about to rain
- Measure the area you're treating.
- Calculate how much spray to mix.
- Wear long sleeve shirt, long pants, shoes and any other protective equipment listed on the label and follow all the label precautions.
- Be prepared for spills and know how to clean them up.

When You're Ready To Spray

- Mix and load spray in an area where any spilled pesticide will not be able to drain or be washed away into storm drains, ditches, streams, ponds or other bodies of water.
- Mix sprayer on grass, not the sidewalk or driveway.
- Mix only as much as needed.

When You're Spraying

- AVOID spraying in or near storm drains, ditches, streams, and ponds!
- Leave an untreated strip around these areas to protect the water.

When You're done

- Never dump leftovers down any drain; Save for a future application.
- Triple-rinse sprayer and apply rinsewater to treated area.
- Take any old or unwanted pesticides to a Household Hazardous Waste Collection Center (714) 834-6752.

Using Pest Control Products. It's Your Responsibility To Do It Right!



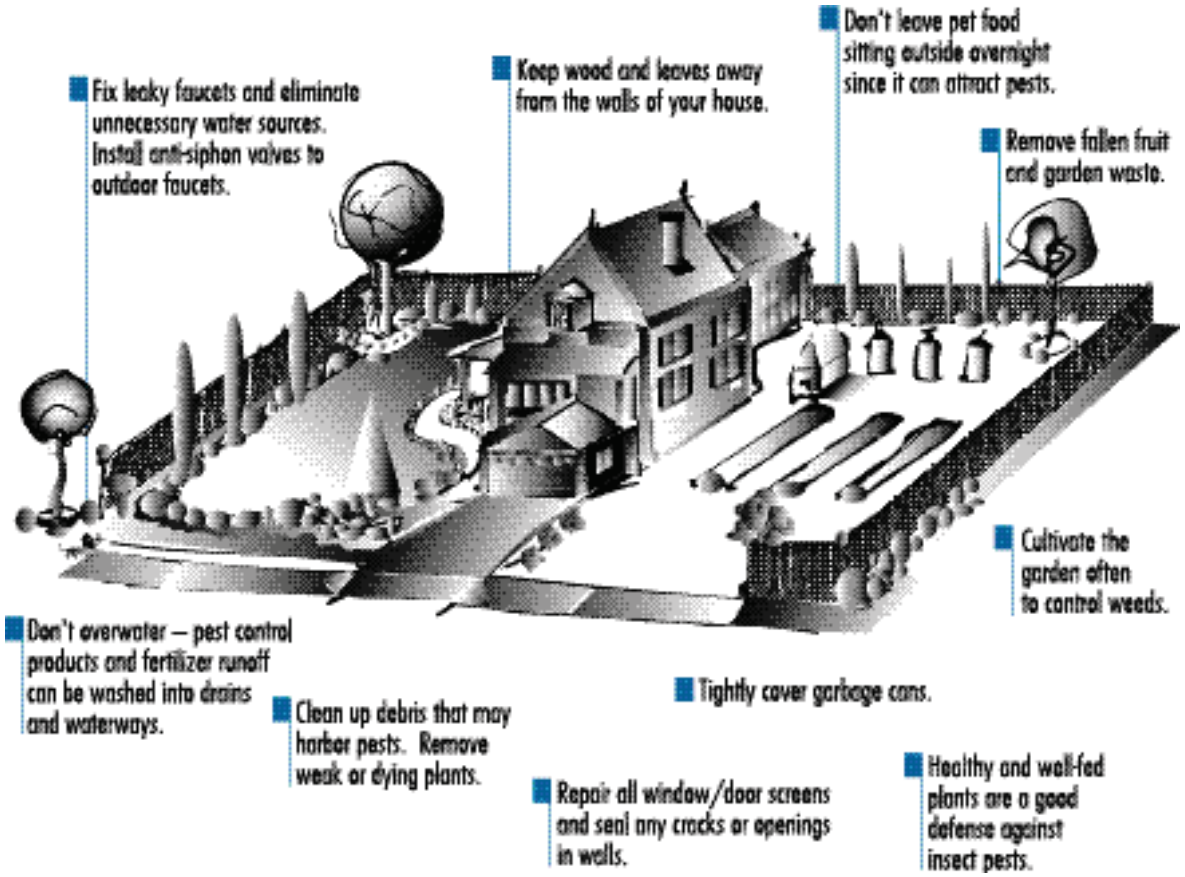

IPM... Outsmarting Pests While Protecting Water

With Integrated Pest Management (IPM), homeowners use common sense and nature to make it difficult for pests to survive. IPM techniques include cultural practices (such as mulching to prevent weeds), encouraging natural enemies (good bugs), and judicious use of pest control products.

- First, identify your pest problem. To find the best solution, you need to pin down the problem. Consult gardening books, your county cooperative extension office or your local nursery.
- Decide how much pest control is necessary. If you can live with some pest damage, you can avoid intensive pest control product treatments.
- Choose an effective option. Try various types of controls first: washing bugs off plants, pruning diseased parts of plants. If you need to use pest control products, choose one that targets the problem and poses the least hazard.
- Finally, it's easier to prevent pests than to control them.

Think ahead.



This brochure is being distributed in order to reduce the impacts of pesticides on water quality. It was produced with support from the Orange County Storm Water Program, the Coalition for Urban/Rural Environmental Stewardship (CURES) and a 319(h) grant from the State Water Resources Control Board.

Orange County Storm Water Program Participants:

Anaheim Public Works/Engineering	(714) 765-5176
Brea Engineering	(714) 990-7666
Buena Park Public Works	(714) 562-3655
Costa Mesa Public Services	(714) 754-5248
Cypress Engineering	(714) 229-6752
Dana Point Public Works	(949) 248-3562
Fountain Valley Public Works	(714) 593-4400 x347
Fullerton Engineering Dept	(714) 738-6853
Garden Grove Development Services	(714) 741-5554
Huntington Beach Public Works	(714) 536-5432
Irvine Public Works	(949)724-6515
La Habra Public Services	(562) 905-9792
La Palma Public Works	(714) 523-1140 x102
Laguna Beach Municipal Services	(949) 497-0711
Laguna Hills Engineering	(949) 707-2600
Laguna Niguel Public Works	(949) 362-4337
Lake Forest Public Works	(949) 461-3480
Los Alamitos Community Dev	(562) 431-3538 x301
Mission Viejo Public Works	(949) 470-3095
Newport Beach Public works	(949) 644-3311
Orange Public Works	(714) 744-5551
Placentia Engineering	(714) 993-8131
San Clemente Engineering	(949) 361-6100
San Juan Capistrano Engineering	(949) 493-1171
Santa Ana Public Works	(714) 647-3380
Seal Beach Engineering	(562) 431-2527 x318
Stanton Public Works	(714) 379-9222 x204
Tustin Public Works Engineering	(714) 573-3150
Villa Park Engineering	(714) 998-1500
Westminster Public Works Eng.	(714) 898-3311 x215
Yorba Linda Engineering	(714) 961-7170 x174
O.C. Storm Water Program	1-877-89-SPILL (1-877-897-7455)
24 Hour Water Pollution Hotline	(714) 567-6363 or ashbyk@pfrd.co.orange.ca.us
Chemical and Hazardous Material Spill Emergencies	911

Other Important Phone Numbers:

For Additional Brochures	1-877-89-SPILL (1-877-897-7455)
UC Masters & Coop Extension ucmastergardeners@yahoo.com	(714) 708-1646
O.C. Household Hazardous Waste Information or www.oc.ca.gov/IWMD	(714) 834-6752
Information on agriculture chemicals, pesticides and possible alternatives, O.C. Agriculture Commissioner	(714) 447-7115

Original graphics developed with support from:
Coalition For Urban/Rural Environmental Stewardship (CURES)
Western Crop Protection Association (WCPA)
Responsible Industry for a Sound Environment (RISE)





Keeping Pest Control Products Out of Creeks, Rivers and The Ocean

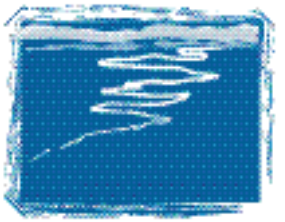





HOMEOWNER TIPS

PROTECTING WATER

Sewage Spill Regulatory Requirements

Allowing sewage to discharge to a gutter or storm drain may subject you to penalties and/or out-of-pocket costs to reimburse cities or public agencies for clean-up efforts.

Here are the pertinent codes, fines, and agency contact information that apply.

Orange County Stormwater Program
24 Hour Water Pollution Reporting Hotline
1-877-89-SPILL (1-877-897-7455)

- County and city water quality ordinances prohibit discharges containing pollutants.

Orange County Health Care Agency Environmental Health
(714) 433-6419

California Health and Safety Code, Sections 5410-5416

- No person shall discharge raw or treated sewage or other waste in a manner that results in contamination, pollution or a nuisance.
- Any person who causes or permits a sewage discharge to any state waters:
  - must immediately notify the local health agency of the discharge.
  - shall reimburse the local health agency for services that protect the public's health and safety (water-contact receiving waters).
  - who fails to provide the required notice to the local health agency is guilty of a misdemeanor and shall be punished by a fine (between $500–$1,000) and/or imprisonment for less than one year.

Regional Water Quality Control Board
Santa Ana Region (951) 782-4130
San Diego Region (858) 467-2952

- Requires the prevention, mitigation, response to and reporting of sewage spills.

California Office of Emergency Services
(800) 852-7550

California Water Code, Article 4, Chapter 4, Sections 13268-13271
California Code of Regulations, Title 23, Division 3, Chapter 9.2, Article 2, Sections 2250-2260

- Any person who causes or permits sewage in excess of 1,000 gallons to be discharged to state waters **shall immediately notify the Office of Emergency Services.**
- Any person who fails to provide the notice required by this section is **guilty of a misdemeanor** and shall be punished by a fine (less than $20,000) and/or imprisonment for not more than one year.

DTP113 Rev 4/06
printed on recycled paper

Sewage Spill
Reference Guide

Your Responsibilities as a Private Property Owner

Residences
Businesses
Homeowner/Condominium Associations
Federal and State Complexes
Military Facilities



Orange County Sanitation District

Health Care Agency
Environmental Health

PROJECT Pollution PREVENTION

www.ocwatersheds.com

This brochure was designed courtesy of the Orange County Sanitation District (OCSD).
For additional information, call (714) 962-2411, or visit their website at www.ocsd.com

What is a Sewage Spill?

Sewage spills occur when the wastewater being transported via underground pipes overflows through a manhole, cleanout or broken pipe. Sewage spills can cause health hazards, damage to homes and businesses, and threaten the environment, local waterways and beaches.

Common Causes of Sewage Spills

Grease builds up inside and eventually blocks sewer pipes. Grease gets into the sewer from food establishments, household drains, as well as from poorly maintained commercial grease traps and interceptors.

Structure problems caused by tree roots in the lines, broken/cracked pipes, missing or broken cleanout caps or undersized sewers can cause blockages.

Infiltration and inflow (I/I) impacts pipe capacity and is caused when groundwater or rainwater enters the sewer system through pipe defects and illegal connections.

You Are Responsible for a Sewage Spill Caused by a Blockage or Break in Your Sewer Lines!

Time is of the essence in dealing with sewage spills. You are required to **immediately**:

Control and minimize the spill. Keep spills contained on private property and out of gutters, storm drains and public waterways by shutting off or not using the water.

Use sandbags, dirt and/or plastic sheeting to prevent sewage from entering the storm drain system.

Clear the sewer blockage. Always wear gloves and wash your hands. It is recommended that a plumbing professional be called for clearing blockages and making necessary repairs.

Always notify your city sewer/public works department or public sewer district of sewage spills. If the spill enters the storm drains also notify the Health Care Agency. In addition, if it exceeds 1,000 gallons notify the Office of Emergency Services. Refer to the numbers listed in this brochure.

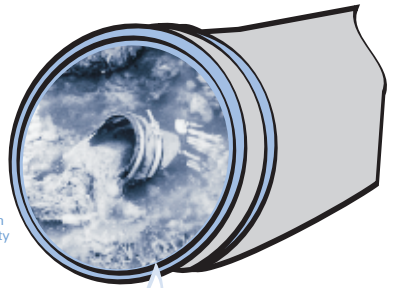

Overflowing cleanout pipe located on private property

You Could Be Liable

Allowing sewage from your home, business or property to discharge to a gutter or storm drain may subject you to penalties and/or out-of-pocket costs to reimburse cities or public agencies for clean-up and enforcement efforts. See Regulatory Codes & Fines section for pertinent codes and fines that apply.

What to Look For

Sewage spills can be a very noticeable gushing of water from a manhole or a slow water leak that may take time to be noticed. Don't dismiss unaccounted-for wet areas.

Look for:

- Drain backups inside the building.
- Wet ground and water leaking around manhole lids onto your street.
- Leaking water from cleanouts or outside drains.
- Unusual odorous wet areas: sidewalks, external walls or ground/landscape around a building.

Caution

Keep people and pets away from the affected area. Untreated sewage has high levels of disease-causing viruses and bacteria. Call your local health care agency listed on the back for more information.

If You See a Sewage Spill Occurring, Notify Your City Sewer/Public Works Department or Public Sewer District IMMEDIATELY!

How a Sewer System Works

A property owner's sewer pipes are called service laterals and are connected to larger local main and regional trunk lines. Service laterals run from the connection at the home to the connection with the public sewer (including the area under the street). These laterals are the responsibility of the property owner and must be maintained by the property owner. Many city agencies have adopted ordinances requiring maintenance of service laterals. Check with your city sewer/local public works department for more information.

Operation and maintenance of **local and regional sewer lines** are the responsibility of the city sewer/public works departments and public sewer districts.

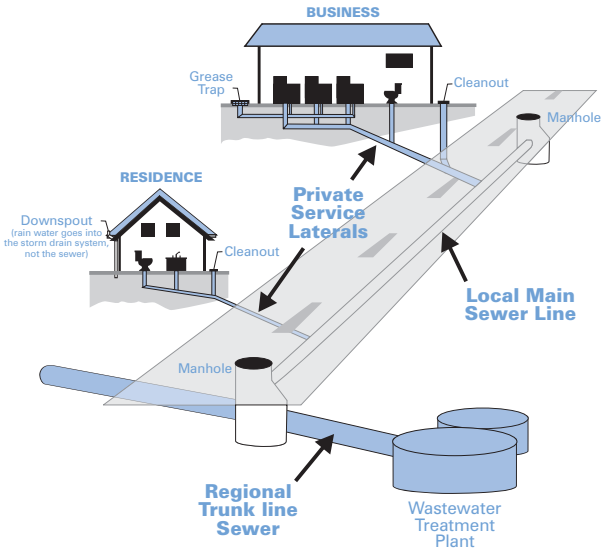

How You Can Prevent Sewage Spills

1. **Never put grease down garbage disposals, drains or toilets.**
2. **Perform periodic cleaning to eliminate grease, debris and roots in your service laterals.**
3. **Repair any structural problems in your sewer system and eliminate any rainwater infiltration/inflow leaks into your service laterals.**



Preventing Grease Blockages

The drain is not a dump! Recycle or dispose of grease properly and never pour grease down the drain.

Homeowners should mix fats, oils and grease with absorbent waste materials such as paper, coffee grounds, or kitty litter and place it in the trash. Wipe food scraps from plates and pans and dump them in the trash.

Restaurants and commercial food service establishments should always use "Kitchen Best Management Practices." These include:

- Collecting all cooking grease and liquid oil from pots, pans and fryers in covered grease containers for recycling.
- Scraping or dry-wiping excess food and grease from dishes, pots, pans and fryers into the trash.
- Installing drain screens on all kitchen drains.
- Having spill kits readily available for cleaning up spills.
- Properly maintaining grease traps or interceptors by having them serviced regularly. Check your local city codes.

Orange County Agency Responsibilites

- **City Sewer/Public Works Departments—** Responsible for protecting city property and streets, the local storm drain system, sewage collection system and other public areas.
- **Public Sewer/Sanitation District—** Responsible for collecting, treating and disposing of wastewater.
- **County of Orange Health Care Agency—** Responsible for protecting public health by closing ocean/bay waters and may close food-service businesses if a spill poses a threat to public health.
- **Regional Water Quality Control Boards—** Responsible for protecting State waters.
- **Orange County Stormwater Program—** Responsible for preventing harmful pollutants from being discharged or washed by stormwater runoff into the municipal storm drain system, creeks, bays and the ocean.

You Could Be Liable for Not Protecting the Environment

Local and state agencies have legal jurisdiction and enforcement authority to ensure that sewage spills are remedied.

They may respond and assist with containment, relieving pipe blockages, and/or clean-up of the sewage spill, especially if the spill is flowing into storm drains or onto public property.

A property owner may be charged for costs incurred by these agencies responding to spills from private properties.



Report Sewage Spills!

City Sewer/Public Works Departments

Aliso Viejo	(949) 425-2500
Anaheim	(714) 765-6860
Brea	(714) 990-7691
Buena Park	(714) 562-3655
Costa Mesa	(949) 645-8400
Cypress	(714) 229-6760
Dana Point	(949) 248-3562
Fountain Valley	(714) 593-4600
Fullerton	(714) 738-6897
Garden Grove	(714) 741-5375
Huntington Beach	(714) 536-5921
Irvine	(949) 453-5300
Laguna Beach	(949) 497-0765
Laguna Hills	(949) 707-2650
Laguna Niguel	(949) 362-4337
Laguna Woods	(949) 639-0500
La Habra	(562) 905-9792
Lake Forest	(949) 461-3480
La Palma	(714) 690-3310
Los Alamitos	(562) 431-3538
Mission Viejo	(949) 831-2500
Newport Beach	(949) 644-3011
Orange	(714) 532-6480
Orange County	(714) 567-6363
Placentia	(714) 993-8245
Rancho Santa Margarita	(949) 635-1800
San Clemente	(949) 366-1553
San Juan Capistrano	(949) 443-6363
Santa Ana	(714) 647-3380
Seal Beach	(562) 431-2527
Stanton	(714) 379-9222
Tustin	(714) 962-2411
Villa Park	(714) 998-1500
Westminster	(714) 893-3553
Yorba Linda	(714) 961-7170

Public Sewer/Water Districts

Costa Mesa Sanitary District	(714) 393-4433/ (949) 645-8400
El Toro Water District	(949) 837-0660
Emerald Bay Service District	(949) 494-8571
Garden Grove Sanitary District	(714) 741-5375
Irvine Ranch Water District	(949) 453-5300
Los Alamitos/Rossmoor Sewer District	(562) 431-2223
Midway City Sanitary District (Westminster)	(714) 893-3553
Moulton Niguel Water District	(949) 831-2500
Orange County Sanitation District	(714) 962-2411
Santa Margarita Water District	(949) 459-6420
South Coast Water District	(949) 499-4555
South Orange County Wastewater Authority	(949) 234-5400
Sunset Beach Sanitary District	(562) 493-9932
Trabuco Canyon Sanitary District	(949) 858-0277
Yorba Linda Water District	(714) 777-3018

Other Agencies

Orange County Health Care Agency	(714) 433-6419
Office of Emergency Services	(800) 852-7550



Clean beaches and healthy creeks, rivers, bays, and ocean are important to Orange County. However, many common activities can lead to water pollution if you're not careful. Washwater, oil and residue from car washing should not flow into the street, gutter or storm drain. Unlike water in sanitary sewers (from sinks and toilets), water in storm drains is not treated before entering our waterways.

You would never dump soap, oil or dirty water into the ocean, so don't let it enter the storm drains. Follow these easy tips to help prevent water pollution.

For more information,
please call the
Orange County Stormwater Program
at **1-877-89-SPILL**
(1-877-897-7455)
or visit
www.ocwatersheds.com

To report a spill,
call the
Orange County 24-Hour
Water Pollution Problem
Reporting Hotline
at **1-877-89-SPILL**
(1-877-897-7455)

For emergencies, dial 911.

The tips contained in this brochure provide useful information about how you can keep soap, oil and washwater from car wash activities from entering the storm drain system. If you have other suggestions, please contact your city's stormwater representative or call the Orange County Stormwater Program.

Printed on Recycled Paper

Help Prevent Ocean Pollution:

Tips for Car Wash Fund-Raisers

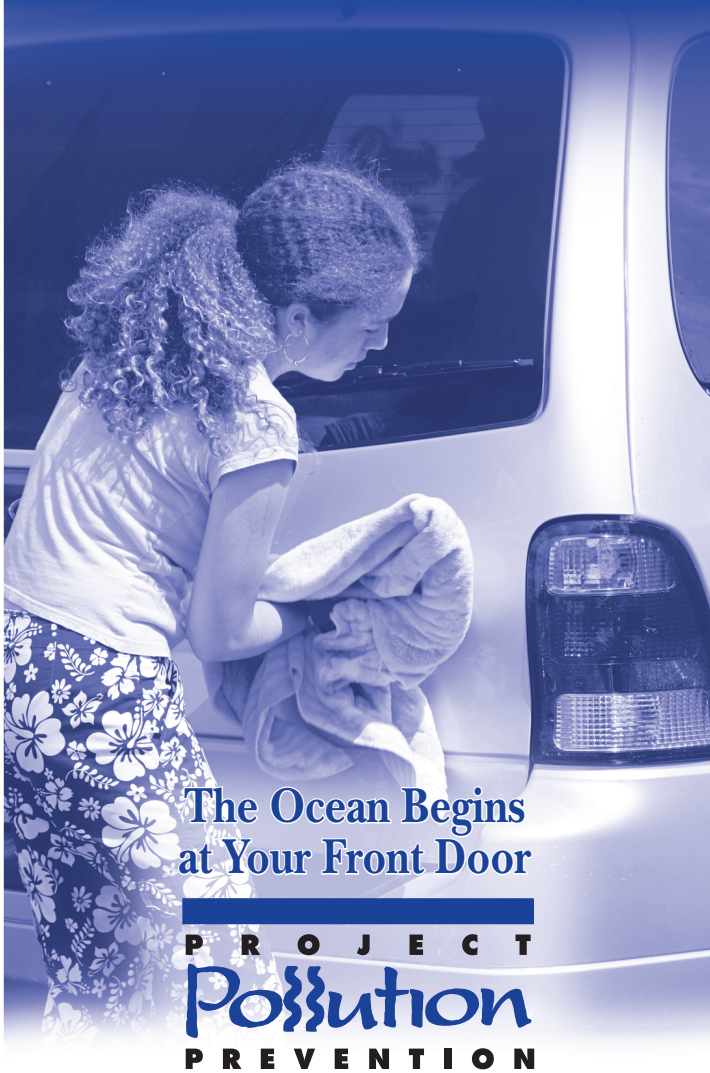

The Ocean Begins at Your Front Door

PROJECT Pollution PREVENTION

Tips for Car Wash Fund-Raisers

Before beginning your car wash fund-raiser

- Partner with a professional car wash and avoid the pollution that parking lot car washes can produce.



- Hold a meeting with all participants to explain the proper procedures that should be followed when washing cars.
- Remove all trash and debris from the car washing area.
- Select only soaps, cleaners or detergents labeled "non-toxic," "phosphate-free," or "biodegradable." The safest products for the environment are vegetable-based or citrus-based soaps. However, even these soaps can be toxic for the environment, so never let any products enter the street, gutter or storm drain.
- Do not use acid based wheel cleaners or engine degreasers.
- Select a site where the washwater can soak into grass, gravel, or be diverted to nearby landscaping. This will allow the washwater to filter through the vegetation and/or soil instead of flowing directly into a storm drain.
- Divert the washwater to an area where the water can pool and evaporate throughout the day, or arrange to dispose of the washwater down a sanitary sewer drain. For details, refer to Factsheet *IC24 Wastewater Disposal Guidelines located* at **www.ocwatersheds.com/StormWater/documents_bmp_existing_development.asp#res**
- If there is a storm drain on-site, block it with sandbags. At the end of the day, dispose of the sandbags by dumping the contents in an authorized landscaped area.



During the fund-raiser

- Never let any trash or washwater enter the street, gutter or storm drain.
- Shake car mats in a trash can or vacuum them. Do not shake dirt from car mats directly onto the ground.
- Use a bucket of soapy water to re-soap rags or sponges throughout the day rather than adding soap directly to them.
- Wring sponges and washrags into buckets, not the ground.
- Conserve water by using a spray nozzle with an automatic shut-off. Turn off the water or kink the hose when not in use.
- Always empty buckets into the sanitary sewer system (e.g. sinks or toilets) or a landscaped area rather than pouring the water on concrete or asphalt.

After the fund-raiser

- Remember to clean up. Have a volunteer walk the perimeter of the site to pick up trash and debris and dispose of it properly.

PROJECT Pollution PREVENTION



Clean beaches and healthy creeks, rivers, bays and ocean are important to Orange County. However, many common activities can lead to water pollution if you're not careful. Fertilizers, pesticides and other chemicals that are left on yards or driveways can be blown or washed into storm drains that flow to the ocean. Overwatering lawns can also send materials into storm drains. Unlike water in sanitary sewers (from sinks and toilets), water in storm drains is not treated before entering our waterways.

You would never pour gardening products into the ocean, so don't let them enter the storm drains. Follow these easy tips to help prevent water pollution.

For more information,
please call the
Orange County Stormwater Program
at **1-877-89-SPILL** (1-877-897-7455)
or visit
www.ocwatersheds.com

UCCE Master Gardener Hotline:
(714) 708-1646

To report a spill,
call the
Orange County 24-Hour
Water Pollution Problem
Reporting Hotline
1-877-89-SPILL (1-877-897-7455).

For emergencies, dial 911.

The tips contained in this brochure provide useful information to help prevent water pollution while landscaping or gardening. If you have other suggestions, please contact your city's stormwater representatives or call the Orange County Stormwater Program.

Printed on Recycled Paper

Help Prevent Ocean Pollution:

Tips for Landscape & Gardening



The Ocean Begins at Your Front Door

PROJECT Pollution PREVENTION

Tips for Landscape & Gardening

Never allow gardening products or polluted water to enter the street, gutter or storm drain.

General Landscaping Tips

- Protect stockpiles and materials from wind and rain by storing them under tarps or secured plastic sheeting.
- Prevent erosion of slopes by planting fast-growing, dense ground covering plants. These will shield and bind the soil.
- Plant native vegetation to reduce the amount of water, fertilizers, and pesticide applied to the landscape.



- Never apply pesticides or fertilizers when rain is predicted within the next 48 hours.

Garden & Lawn Maintenance

- Do not overwater. Use irrigation practices such as drip irrigation, soaker hoses or micro spray systems. Periodically inspect and fix leaks and misdirected sprinklers.
- Do not rake or blow leaves, clippings or pruning waste into the street, gutter or storm drain. Instead, dispose of green waste by composting, hauling it to a permitted landfill, or recycling it through your city's program.



- Use slow-release fertilizers to minimize leaching, and use organic fertilizers.
- Read labels and use only as directed. Do not over-apply pesticides or fertilizers. Apply to spots as needed, rather than blanketing an entire area.
- Store pesticides, fertilizers and other chemicals in a dry covered area to prevent exposure that may result in the deterioration of containers and packaging.



- Rinse empty pesticide containers and re-use rinse water as you would use the product. Do not dump rinse water down storm drains. Dispose of empty containers in the trash.
- When available, use non-toxic alternatives to traditional pesticides, and use pesticides specifically designed to control the pest you are targeting. For more information, visit **www.ipm.ucdavis.edu**.
- If fertilizer is spilled, sweep up the spill before irrigating. If the spill is liquid, apply an absorbent material such as cat litter, and then sweep it up and dispose of it in the trash.
- Take unwanted pesticides to a Household Hazardous Waste Collection Center to be recycled. Locations are provided below.

Household Hazardous Waste Collection Centers

Anaheim:	1071 N. Blue Gum St.
Huntington Beach:	17121 Nichols St.
Irvine:	6411 Oak Canyon
San Juan Capistrano:	32250 La Pata Ave.

For more information, call (714) 834-6752 or visit www.oclandfills.com



Clean beaches and healthy creeks, rivers, bays and ocean are important to Orange County. However, many common activities such as painting can lead to water pollution if you're not careful. Paint must be used, stored and disposed of properly to ensure that it does not enter the street, gutter or storm drain. Unlike water in sanitary sewers (from sinks and toilets), water in storm drains is not treated before entering our waterways.

You would never dump paint into the ocean, so don't let it enter the storm drains. Follow these easy tips to help prevent water pollution.

For more information,
please call the
Orange County Stormwater Program
at **1-877-89-SPILL** (1-877-897-7455)
or visit
www.ocwatersheds.com

To report a spill,
call the
Orange County 24-Hour Water Pollution Problem Reporting Hotline
at **1-877-89-SPILL** (1-877-897-7455).

For emergencies, dial 911.

The tips contained in this brochure provide useful information to help prevent water pollution while using, storing and disposing of paint. If you have other suggestions, please contact your city's stormwater representatives or call the Orange County Stormwater Program.

Printed on Recycled Paper

Help Prevent Ocean Pollution:

Tips for Projects Using Paint



Tips for Projects Using Paint

Paint can cause significant damage to our environment. Whether you hire a contractor or do it yourself, it is important to follow these simple tips when purchasing, using, cleaning, storing and disposing of paint.

Purchasing Paint

- Measure the room or object to be painted, then buy only the amount needed.
- Whenever possible, use water-based paint since it usually does not require hazardous solvents such as paint thinner for cleanup.

Painting

- Use only one brush or roller per color of paint to reduce the amount of water needed for cleaning.
- Place open paint containers or trays on a stable surface and in a position that is unlikely to spill.
- Always use a tarp under the area or object being painted to collect paint drips and contain spills.

Cleaning

- Never clean brushes or rinse paint containers in the street, gutter or storm drain.
- For oil-based products, use as much of the paint on the brushes as possible. Clean brushes with thinner. To reuse thinner, pour it through a fine filter (e.g. nylon, metal gauze or filter paper) to remove solids such as leftover traces of paint.
- For water-based products, use as much of the paint on the brushes as possible, then rinse in the sink.
- Collect all paint chips and dust. Chips and dust from marine paints or paints containing lead, mercury or tributyl tin are hazardous waste. Sweep up and dispose of at a Household Hazardous Waste Collection Center (HHWCC).

Storing Paint

- Store paint in a dry location away from the elements.
- Store leftover water-based paint, oil-based paint and solvents separately in original or clearly marked containers.
- Avoid storing paint cans directly on cement floors. The bottom of the can will rust much faster on cement.
- Place the lid on firmly and store the paint can upside-down to prevent air from entering. This will keep the paint usable longer. Oil-based paint is usable for up to 15 years. Water-based paint remains usable for up to 10 years.

Alternatives to Disposal

- Use excess paint to apply another coat, for touch-ups, or to paint a closet, garage, basement or attic.
- Give extra paint to friends or family. Extra paint can also be donated to a local theatre group, low-income housing program or school.
- Take extra paint to an exchange program such as the **"Stop & Swap"** that allows you to drop off or pick up partially used home care products free of charge. **"Stop & Swap"** programs are available at most HHWCCs.
- For HHWCC locations and hours, call **(714) 834-6752** or visit **www.oclandfills.com**.



Disposing of Paint

- Never put wet paint in the trash.

For water-based paint:

- If possible, brush the leftover paint on cardboard or newspaper. Otherwise, allow the paint to dry in the can with the lid off in a well-ventilated area protected from the elements, children and pets. Stirring the paint every few days will speed up the drying.
- Large quantities of extra paint should be taken to a HHWCC.
- Once dried, paint and painted surfaces may be disposed of in the trash. When setting a dried paint can out for trash collection, leave the lid off so the collector will see that the paint has dried.

For oil-based paint:

- Oil-based paint is a household hazardous waste. All leftover paint should be taken to a HHWCC.

Aerosol paint:

- Dispose of aerosol paint cans at a HHWCC.

Spills

- Never hose down pavement or other impermeable surfaces where paint has spilled.
- Clean up spills immediately by using an absorbent material such as cat litter. Cat litter used to clean water-based paint spills can be disposed of in the trash. When cleaning oil-based paint spills with cat litter, it must be taken to a HHWCC.
- Immediately report spills that have entered the street, gutter or storm drain to the County's 24-Hour Water Pollution Problem Reporting Hotline at **(714) 567-6363** or visit **www.ocwatersheds.com** to fill out an incident reporting form.

PROJECT Pollution PREVENTION