COUNTY OF SANTA CLARA
ROADS AND AIRPORTS DEPARTMENT

PLANS FOR

EXPRESSWAY GUARDRAIL REPLACEMENT AND SAFETY BARRIER IMPROVEMENTS

STATE (CALTRANS) PROJECT NUMBER: HSIPSL-5937(226)

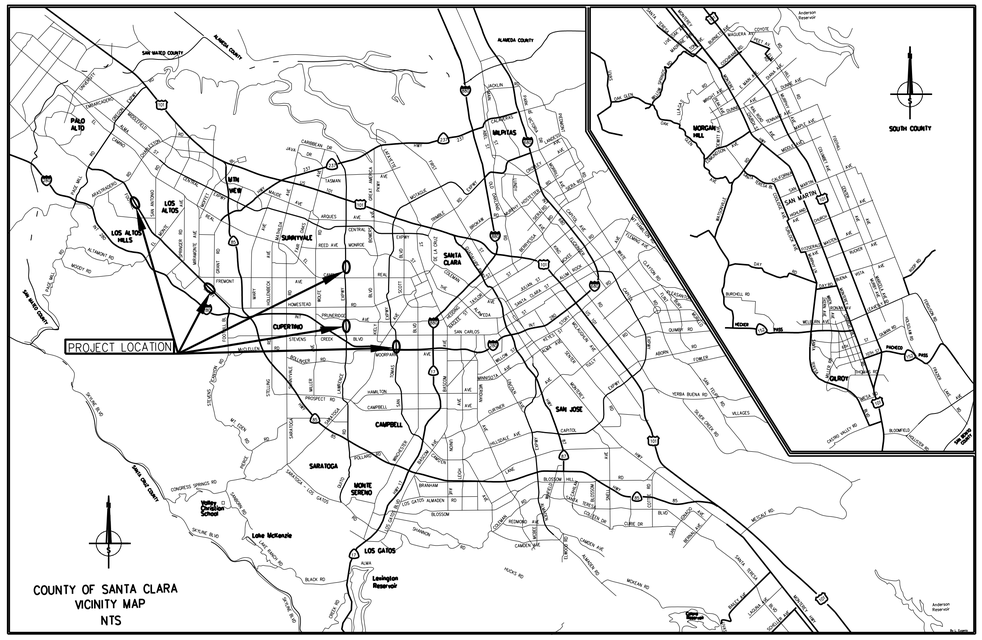
PROJECT LOCATION
SAN MATEO COUNTY
ALAMEDA COUNTY
SOUTH COUNTY
PALO ALTO
LOS ALTOS
LOS ALTOS HILLS
MTN VIEW
SUNNYVALE
SANTA CLARA
MILPITAS
CUPERTINO
MORGAN HILL
SAN MARTIN
GILROY
CAMPBELL
SAN JOSE
SARATOGA
MONTE SERENO
LOS GATOS
Lake Elsman
Lake McKenzie
Lexington Reservoir
Anderson Reservoir
Almaden Reservoir
Guadalupe Reservoir
Stevens Creek Reservoir
Vasona Reservoir
Los Gatos Creek Reservoir
Uvas Reservoir
Chesbro Reservoir
Calero Reservoir
Coyote Lake
Hicks Reservoir
Bodfish Reservoir
Hernandez Reservoir
Pacheco Reservoir
Santa Teresa Reservoir
Mary Laub Reservoir
Mary Laub Reservoir
Yerba Buena Reservoir
Silver Creek Reservoir
Silver Creek Reservoir
Coyote Reservoir
Coyote Reservoir
Coyote

GENERAL NOTES

1. ALL DIMENSIONS ARE IN FEET AND DECIMALS THEREOF UNLESS OTHERWISE SHOWN.
2. EXISTING UTILITIES ARE LOCATED IN THE PROJECT AREA. THE CONTRACTOR IS RESPONSIBLE FOR CONTACTING THE RESPECTIVE UTILITY COMPANIES AND AFFECTED AGENCIES FOR VERIFICATION OF LOCATION AND DEPTHS OF EXISTING UTILITIES. THE CONTRACTOR SHALL NOTIFY UNDERGROUND SERVICE ALERT (U.S.A) AT 1–800–227–2600 BEFORE DIGGING.
3. UPON DISCOVERY OF EXISTING UTILITIES CROSSING IN CLOSE PROXIMITY TO THE PROPOSED WORK, CONTRACTOR SHALL FIELD LOCATE AND NOTIFY THE ENGINEER OF ANY CONFLICTS WITH THE PROPOSED WORK PRIOR TO THE START OF CONSTRUCTION.
4. CONTRACTOR SHALL INSPECT AND VERIFY ALL FIELD CONDITIONS BEFORE BIDDING.
5. CONTRACTOR SHALL PROVIDE PROTECTIVE DEVICES INCLUDING BARRICADES, FENCING, WARNING SIGNS, LIGHTS, FLAGGERS OR OTHER ITEMS NECESSARY TO ENSURE PUBLIC SAFETY WITHIN THE PROJECT SITE. THIS REQUIREMENT SHALL APPLY CONTINUOUSLY AND NOT BE LIMITED TO NORMAL WORKING HOURS.
6. PEDESTRIANS AND BICYCLISTS TO BE ACCOMMODATED THROUGH THE PROJECT AT ALL TIMES. CONTRACTOR SHALL PROVIDE A DRAWING OF TEMPORARY PEDESTRIAN ACCESS ROUTE PLAN FOR THE ENGINEER'S REVIEW AND APPROVAL.
7. CONTRACTOR SHALL EXERCISE DUE CAUTION DURING CONSTRUCTION TO PROTECT ANY EXISTING LANDSCAPING, FIXTURES, EQUIPMENT, CONCRETE SIDEWALK, CONCRETE DRIVEWAY, CONCRETE CURB AND GUTTER, AND AC PAVING TO REMAIN. ANY DAMAGE RESULTING FROM CONTRACTOR OPERATIONS SHALL BE REPAIRED AS DIRECTED BY THE COUNTY'S REPRESENTATIVE, AT NO COST TO THE COUNTY.
8. DUST SHALL BE CONTROLLED AND ADJOINING STREET AND PRIVATE DRIVEWAYS SHALL BE KEPT CLEAN OF PROJECT DIRT, MUD, MATERIALS AND DEBRIS TO THE SATISFACTION OF THE COUNTY INSPECTOR/ENGINEER. CONTRACTOR SHALL MAKE SWEEPING AND/OR VACUUMING MACHINE READILY AVAILABLE DURING CONSTRUCTION PERIOD.
9. CONTRACTOR SHALL SWEEP AND CLEAN THE CONSTRUCTION SITE BEFORE THE END OF EACH WORKING DAY.
10. CONTRACTOR SHALL NOTIFY THE COUNTY'S REPRESENTATIVE IMMEDIATELY UPON DISCOVERY OF ANY POTENTIAL FIELD CONFLICTS.
11. CONTRACTOR SHALL SUBMIT A TRAFFIC CONTROL PLAN (TCP) INCLUDING CONSTRUCTION AREA SIGNAGE FOR ENGINEER'S REVIEW AND APPROVAL TEN (10) DAYS IN ADVANCE OF ANY WORK.
12. CONTRACTOR SHALL IMPLEMENT BEST MANAGEMENT PRACTICES DURING THE ENTIRE CONSTRUCTION PERIOD.

GENERAL ABBREVIATIONS

AC	ASPHALT CONCRETE
AB	AGGREGATE BASE
AFTS	ALTERNATIVE FLARED TERMINAL SYSTEM
AP	ANGLE POINT
AVE	AVENUE
CB	CATCH BASIN
CC	CENTER OF CURVE
C&G	CURB & GUTTER
CSD	COUNTY STANDARD DETAIL
CSS	COUNTY STANDARD SPECIFICATIONS
Demo.	DEMOLITION
DI	DRAIN INLET
DH	DETECTOR HAND HOLE
DLC	DETECTOR WIRE
DWG.	DRAWING
ELE	ELEVATION
(E)	EXISTING
EX	EXISTING
EXPY	EXPRESSWAY
FG	FINISH GRADE
F&I	FURNISH & INSTALL
F/O	FIBER OPTICS
L	LENGTH
LF	LINEAR FEET
Lt	LEFT
MAX	MAXIMUM
MH	MANHOLE
MIN	MINIMUM
Mon	Monument
NTS	NOT TO SCALE
O.C.	ON CENTER
PB	PULLBOX
PCC	PORTLAND CEMENT CONCRETE
PED	PEDESTRIAN
Prop	PROPOSED
PVMT	PAVEMENT
R	RADIUS
RD	ROAD
RIM	RIM/TOP OF GRATE ELEVATION
ROW	RIGHT-OF-WAY
Rt	RIGHT
SDD	STATE STANDARD DETAIL
SSP	STATE STANDARD PLAN
SW	SIDEWALK
TC	TOP OF CURB
Temp	TEMPORARY
TSSM	TRAFFIC SAFETY SYSTEMS MANUAL
TYP	TYPICAL

GENERAL LEGEND

- SIGN POST & PANEL OR OBJECT MARKERS
- APPROXIMATE COUNTY R/W
- APPROXIMATE STATE R/W
- SAWCUT, REMOVE & REPLACE EX AC PAVEMENT (PAVEMENT REPAIR)
- NEW HMA
- EX DETECTOR LOOP
- EX SIGNAL POLE WITH MAST ARM
- EX SIGNAL POLE WITH NO MAST ARM
- EX SIGNAL EQUIPMENT
- EX DETECTOR LOOP
- EX CATCH BASIN/DRAIN INLET (CB)
- EX SANITARY/DRAINAGE MANHOLE
- EX MONUMENT
- EX DETECTOR HANDHOLE (D dh)
- EX ELECTRIC/TELEPHONE HANDHOLE (R)
- EX ELECTRICAL CABINET
- EX ELECTRICAL PULLBOX (PB)
- EX DRAINAGE INLET (DI)
- EX FENCE
- EX GUARDRAIL
- <XX'> LANE WIDTH
- CONTROL POINT
- ----W---- EX WATER
- ----SS---- EX SEWER
- ----G---- EX GAS
- ----SD---- EX DRAINAGE
- ----OH---- EX OVERHEAD CABLE
- ----E---- EX ELECTRIC TELEPHONE
- ----C---- EX CONDUIT
- ----TV---- EX TV CABLE
- ---T--- EX TELEPHONE
- ---BC--- EX BOX CULVERT
- ---CUL--- EX CULVERT
- ---WD--- EX WATER DISTRICT EASEMENT

NO.	REVISIONS	DATE	PREPARED BY

COUNTY OF SANTA CLARA ROADS AND AIRPORTS DEPARTMENT

YZ (CNTY) 03-2026 DESIGNED DATE	SUBMITTED: YALI ZHANG, P.E. ASSISTANT CIVIL ENGINEER
YZ (CNTY) 03-2026 DRAWN DATE	
PP (CNTY) 03-2026 CHECKED DATE	APPROVED: ROCELIA KMAK, P.E. PRINCIPAL CIVIL ENGINEER

REGISTERED PROFESSIONAL ENGINEER — YALI ZHANG — No C93475 Exp.6-30-26 — CIVIL — STATE OF CALIFORNIA

EXPRESSWAY GUARDRAIL REPLACEMENT AND SAFETY BARRIER IMPROVEMENTS

GENERAL NOTES

WORK ORDER No.	ADVERTISEMENT DATE:	CONTRACT No.	FILE No.
C3420			

DRAWING No. GN

SHT No. 2 OF 34

Scale AS SHOWN

REMOVAL QUANTITIES							
SPECS REF	ITEM DESCRIPTION	UNIT	QUANTITY				
			FOOTHILL/EDITH (LOC #1) (ALTERNATE BID 1A)	FOOTHILL/GRANT (LOC #2) (ALTERNATE BID 1A)	LAWRENCE (LOC #3)	SAN TOMAS (LOC #4)	TOTAL
110-11.02	TREATED WOOD WASTE	LB	22464 12+47.56 TO 18+48.99 NB 23+66.20 TO 24+36.50 NB 28+92.68 TO 41+92.75 NB 41+51.39 TO 46+51.83 SB	1280	120	192 30+90 SB 35+02.04 TO 35+79.44 NB 33+83.51 TO 35+96.84 NB 33+80.71 TO 35+60.75 NB	24056
110-12.07	REMOVE EXISTING GUARDRAIL	LF	2824 12+47.56 TO 18+48.99 NB 23+66.20 TO 24+36.50 NB 28+92.68 TO 41+92.75 NB 41+51.39 TO 46+51.83 SB	155	15	314 30+90 SB 35+02.04 TO 35+79.44 NB 33+83.51 TO 35+96.84 NB 33+80.71 TO 35+60.75 NB	3310
110-12.08	REMOVE EXISTING HMA DIKE	LF	633 19+18.36 TO 19+68.06 NB 24+91.19 TO 25+66.18 NB 41+92.75 TO 45+11.17 NB 46+34.59 TO 47+09.55 NB 39+58.42 TO 40+33.98 SB 43+92.39 TO 44+40.58 SB				640
110-12.09	REMOVE EXISTING CONCRETE (CURB)	LF	250 44+40.58 TO 46+89.66 SB	190	288		730
110-12.09	REMOVE EXISTING CONCRETE (CURB & GUTTER)	LF			26	145 17+10.08 TO 17+96.65 SB 30+50.88 TO 31+09.58 SB	180
110-12.09	REMOVE EXISTING CONCRETE (ISLAND)	SQYD				280 33+82.56 TO 36+25.08 NB 33+05.79 TO 36+20.77 NB	280
110-12.10	SOIL EXCAVATION AND GRADING	CUYD	3				3
110-12.11	REMOVE EXISTING CRASH CUSHION SYSTEM	EA				1	1
110-12.12	REMOVE EXISTING PULL BOX	EA				1	1
110-12.13	RELOCATE ROADSIDE SIGN	EA			2		2

NO.	REVISIONS	DATE	PREPARED BY

COUNTY OF SANTA CLARA ROADS AND AIRPORTS DEPARTMENT

YZ (CNTY) 03-2026 DESIGNED DATE
YZ (CNTY) 03-2026 DRAWN DATE
PP (CNTY) 03-2026 CHECKED DATE

SUBMITTED:
YALI ZHANG, P.E.
ASSISTANT CIVIL ENGINEER

REGISTERED PROFESSIONAL ENGINEER YALI ZHANG No C93475 Exp.6-30-26 CIVIL STATE OF CALIFORNIA

APPROVED:
ROCELIA KMAK, P.E.
PRINCIPAL CIVIL ENGINEER

EXPRESSWAY GUARDRAIL REPLACEMENT AND SAFETY BARRIER IMPROVEMENTS

QUANTITY SHEET

DRAWING No. Q-1

SHT No. 3 OF 34

WORK ORDER No. C3420 | ADVERTISEMENT DATE: | CONTRACT No. | FILE No. | Scale AS SHOWN

NEW CONSTRUCTION QUANTITIES							
SPECS REF	ITEM DESCRIPTION	UNIT	QUANTITY				
			FOOTHILL/EDITH (LOC #1) (ALTERNATE BID 1A)	FOOTHILL/GRANT (LOC #2) (ALTERNATE BID 1A)	LAWRENCE (LOC #3)	SAN TOMAS (LOC #4)	TOTAL
110-12.14	HOT MIX ASPHALT DIKE (TYPE C)	LF	301 19+18.33 TO 19+93.14 NB 24+91.19 TO 25+66.18 NB 46+34.59 TO 47+09.55 NB 39+58.42 TO 40+33.98 SB				310
110-12.15.1	MINOR CONCRETE (CURB AND GUTTER)	LF				144 17+10.08 TO 17+96.95 SB 30+50.96 TO 31+09.58 SB	200
110-12.15.2	MINOR CONCRETE (VEGETATION CONTROL)	SQFT			420		420
110-12.16	MINOR HOT MIX ASPHALT 4"	TON				65 33+82.56 TO 36+25.08 NB 33+05.79 TO 36+20.77 SB	65
110-12.17	MIDWEST GUARDRAIL SYSTEM - STANDARD POST 6FT	LF	454 12+45.62 TO 12+55.55 NB 19+18.36 TO 19+93.36 NB 23+56.20 TO 23+76.09 NB 24+91.19 TO 25+40.75 NB 27+56.31 TO 27+66.31 NB 45+11.17 TO 46+84.27 NB 39+83.72 TO 42+52.55 SB 43+66.37 TO 43+92.39 SB			1342 17+37.32 TO 30+76.69 SB	1,800
110-12.17	MIDWEST GUARDRAIL SYSTEM - LONG POST 11FT	LF	2348 12+55.55 TO 19+18.36 NB 23+76.09 TO 24+91.19 NB 27+66.31 TO 40+83.95 NB 42+52.55 TO 43+66.37 SB				2360
110-12.18	TRANSITION RAILINGS (TYPE AGT)	EA	3			1	4
110-12.19	END ANCHOR ASSEMBLY (TYPE SFT-M)	EA	3				3
110-12.20	GUARDRAIL END TERMINAL SYSTEM - IN LINE	EA	2				2
110-12.20	GUARDRAIL END TERMINAL SYSTEM - FLARED END	EA	2			1	3
110-12.21	IMPORTED BORROW	CUYD	50				51
110-12.22	RSP FABRIC CLASS 8	SQYD	27				27
110-12.23	RAIL ELEMENT WALL	LF	197				197
110-12.24	CABLE RAILING	LF	197				197
110-12.23	CONCRETE BARRIER (TYPE 60MS)	LF	620 40+83.95 TO 45+11.17 NB 43+92.39 TO 46+89.66 SB	160	100	490 30+76.69 TO 35+68.25 SB	1370
110-12.23	CONCRETE BARRIER (TYPE 60MGF MOD)	LF			180		180
110-12.23	CONCRETE BARRIER (TYPE 60R)	LF				344 33+92.29 TO 35+82.93 NB 33+80.71 TO 35+82.99 SB	350
110-12.24	CRASH CUSHION SYSTEM (ALTERNATIVE TL-3)	EA		1	1	3	5
110-12.25	PULL BOX #5 HS-20	EA				1	1
110-12.26	THERMOPLASTIC PAVEMENT STRIPE - DETAIL 25	LF				1145	1150
110-12.26	THERMOPLASTIC PAVEMENT STRIPE - DETAIL 38	LF				22	30
110-12.26	THERMOPLASTIC PAVEMENT STRIPE - DETAIL 39	LF				80	80
110-12.27	THERMOPLASTIC PAVEMENT MARKERS - TYPE RY FOR DETAIL 25	EA				288	288
110-12.27	THERMOPLASTIC PAVEMENT MARKERS - TYPE G FOR DETAIL 38	EA				15	15
110-12.28	DELINEATOR - GUARDRAIL	EA	8			3	11
110-12.29	DELINEATOR - CONCRETE BARRIRER, WHITE, TOP MOUNTED	EA	1	5	3	1	10
110-12.29	DELINEATOR - CONCRETE BARRIRER, YELLOW, SIDE MOUNTED	EA				18	18
110-12.30	DELINEATOR - TYPE P (CA) RIGHT OBJECT MARKER	EA	2			1	3
110-12.31	DELINEATOR - CLASS 1 SURFACE MOUNTED	EA				4	4

NO.	REVISIONS	DATE	PREPARED BY

COUNTY OF SANTA CLARA ROADS AND AIRPORTS DEPARTMENT

YZ (CNTY) 03-2026 DESIGNED DATE
YZ (CNTY) 03-2026 DRAWN DATE
PP (CNTY) 03-2026 CHECKED DATE

SUBMITTED:
YALI ZHANG, P.E.
ASSISTANT CIVIL ENGINEER

REGISTERED PROFESSIONAL ENGINEER YALI ZHANG No C93475 Exp.6-30-26 CIVIL STATE OF CALIFORNIA

APPROVED:
ROCELIA KMAK, P.E.
PRINCIPAL CIVIL ENGINEER

EXPRESSWAY GUARDRAIL REPLACEMENT AND SAFETY BARRIER IMPROVEMENTS

QUANTITY SHEET

WORK ORDER No. C3420 | ADVERTISEMENT DATE: | CONTRACT No. | FILE No.

DRAWING No. Q-2

SHT No. 4 OF 34

Scale AS SHOWN

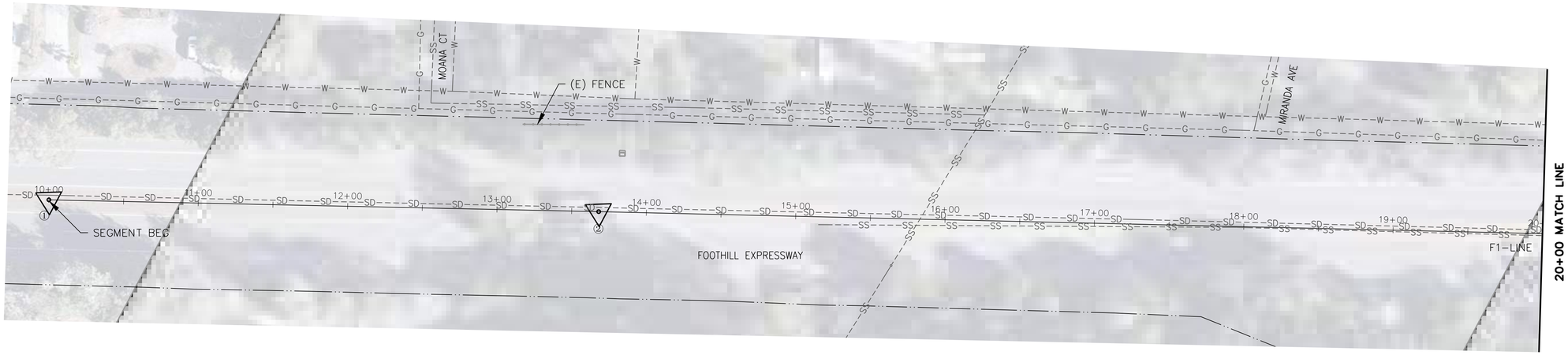

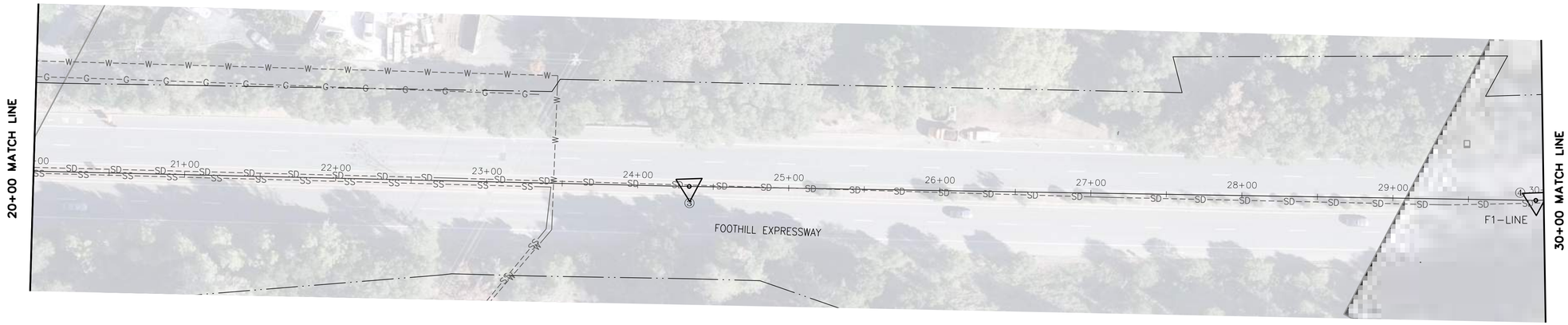

SCALE: 1"=40'

LEGENDS:

- ▽ CONTROL POINT
- —··— COUNTY R/W
- ----W---- EX WATER
- ----SS---- EX SEWER
- ----G---- EX GAS
- ----SD---- EX DRAINAGE
- ----OH---- EX OVERHEAD CABLE
- ----E---- EX ELECTRIC TELEPHONE
- ----C---- EX CONDUIT
- ----TV---- EX TV CABLE
- —T— EX TELEPHONE
- —BC— EX BOX CULVERT
- —CUL— EX CULVERT
- —WD— EX WATER DISTRICT EASEMENT

CONTROL POINT TABLE

POINT #	NAME	STATION	NORTHING	EASTING	ELEVATION
①	–	10+00.00	1969719.84	6088201.61	–
②	PK NAIL	13+68.07	1969391.22	6088367.40	135.80
③	NAIL 60D	24+34.11	1968438.57	6088845.83	148.85
④	NAIL 60D	29+94.59	1967939.42	6089100.76	150.12

ALIGNMENT INFORMATION

LINE #	DIRECTION	START POINT	END POINT	LENGTH
F1–LINE	S26°46'18.26"E	①	②	368.07'
F1–LINE	S26°39'58.21"E	②	③	1066.04'
F1–LINE	S27°3'17.21"E	③	④	560.48'
F1–LINE	S30°29'51.65"E	④	⑤	781.16'
F1–LINE	S31°31'11.55"E	⑤	⑥	215.53'
F1–LINE	S30°44'15.25"E	⑥	⑦	500.08'
F1–LINE	S31°23'55.74"E	⑦	(1966425.52, 6090004.19)	266.23'

ALTERNATE BID 1A

NO.	REVISIONS	DATE	PREPARED BY

THE COUNTY OF SANTA CLARA 1850

COUNTY OF SANTA CLARA ROADS AND AIRPORTS DEPARTMENT

YZ (CNTY) 03–2026 DESIGNED DATE
YZ (CNTY) 03–2026 DRAWN DATE
PP (CNTY) 03–2026 CHECKED DATE

SUBMITTED:
YALI ZHANG, P.E.
ASSISTANT CIVIL ENGINEER

REGISTERED PROFESSIONAL ENGINEER YALI ZHANG No C93475 Exp.6-30-26 CIVIL STATE OF CALIFORNIA

APPROVED:
ROCELIA KMAK, P.E.
PRINCIPAL CIVIL ENGINEER

EXPRESSWAY GUARDRAIL REPLACEMENT AND SAFETY BARRIER IMPROVEMENTS

UTILITY PLAN - FOOTHILL/EDITH (LOC #1)

WORK ORDER No.	ADVERTISEMENT DATE:	CONTRACT No.	FILE No.
C3420			

DRAWING No. U-1
SHT No. 5 OF 34
Scale AS SHOWN

SCALE: 1"=40'



LEGENDS:

- CONTROL POINT
- COUNTY R/W
- EX WATER
- EX SEWER
- EX GAS
- EX DRAINAGE
- EX OVERHEAD CABLE
- EX ELECTRIC TELEPHONE
- EX CONDUIT
- EX TV CABLE
- EX TELEPHONE
- EX BOX CULVERT
- EX CULVERT
- EX WATER DISTRICT EASEMENT

CONTROL POINT TABLE					
POINT #	NAME	STATION	NORTHING	EASTING	ELEVATION
⑤	HUB	37+75.75	1967266.33	6089497.21	165.73
⑥	NAIL 60D	39+91.29	1967082.60	6089609.89	166.40
⑦	PK NAIL	44+91.37	1966652.77	6089865.48	171.25

ALTERNATE BID 1A

NO.	REVISIONS	DATE	PREPARED BY

COUNTY OF SANTA CLARA ROADS AND AIRPORTS DEPARTMENT

YZ (CNTY) 03-2026 DESIGNED DATE
YZ (CNTY) 03-2026 DRAWN DATE
PP (CNTY) 03-2026 CHECKED DATE

SUBMITTED:
YALI ZHANG, P.E.
ASSISTANT CIVIL ENGINEER

REGISTERED PROFESSIONAL ENGINEER YALI ZHENG No C93475 Exp.6-30-26 CIVIL STATE OF CALIFORNIA

APPROVED:
ROCELIA KMAK, P.E.
PRINCIPAL CIVIL ENGINEER

EXPRESSWAY GUARDRAIL REPLACEMENT AND SAFETY BARRIER IMPROVEMENTS

UTILITY PLAN - FOOTHILL/EDITH (LOC #1)

WORK ORDER No.	ADVERTISEMENT DATE:	CONTRACT No.	FILE No.
C3420			

DRAWING No. U-2
SHT No. 6 OF 34
Scale AS SHOWN

SCALE: 1"=20'

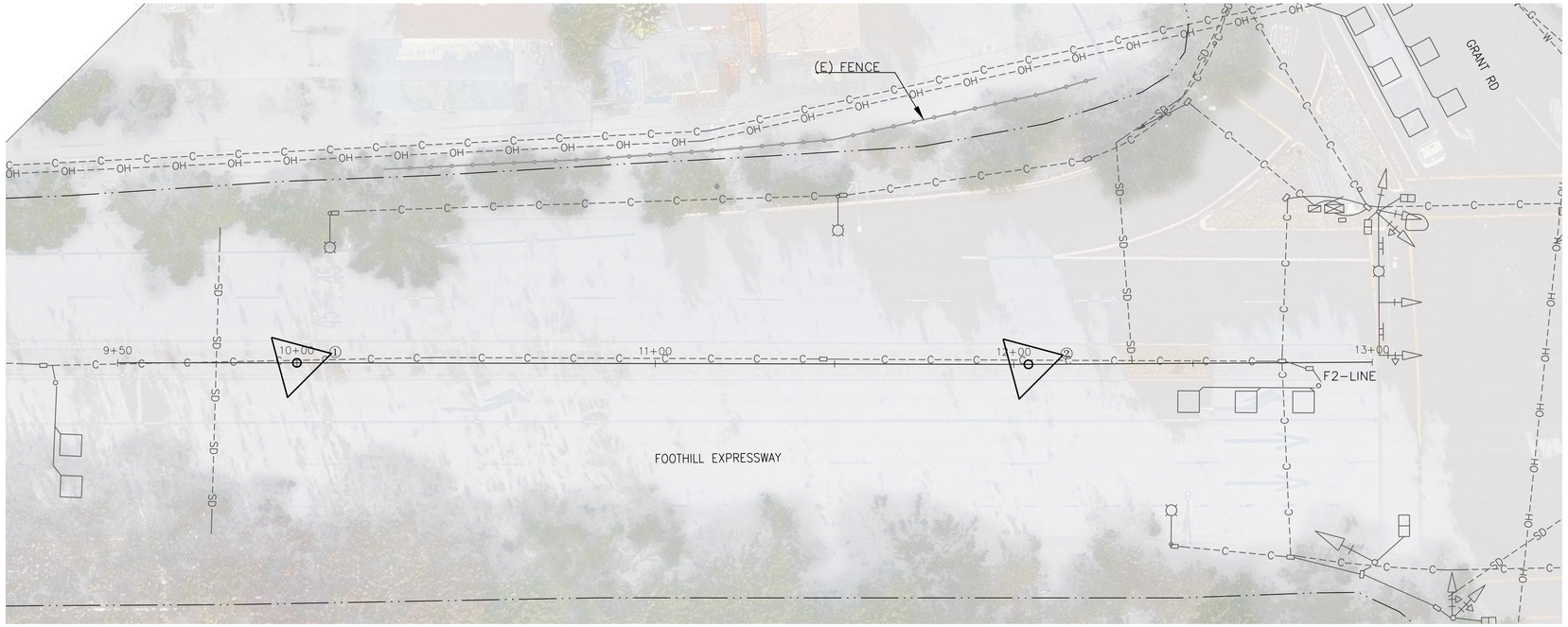

LEGENDS:

- CONTROL POINT
- COUNTY R/W
- EX WATER
- EX SEWER
- EX GAS
- EX DRAINAGE
- EX OVERHEAD CABLE
- EX ELECTRIC TELEPHONE
- EX CONDUIT
- EX TV CABLE
- EX TELEPHONE
- EX BOX CULVERT
- EX CULVERT
- EX WATER DISTRICT EASEMENT

CONTROL POINT TABLE					
POINT #	NAME	STATION	NORTHING	EASTING	ELEVATION
①	PK NAIL	10+00.00	1952399.1170	6102741.2200	240.664
②	CHZ X	12+04.08	1952254.4940	6102885.2150	239.432

ALIGNMENT INFORMATION				
LINE #	DIRECTION	START POINT	END POINT	LENGTH
F2-LINE	S45°E	(1952434.47, 1952434.47)	(1952187.12, 6102953.48)	350'

ALTERNATE BID 1A

NO.	REVISIONS	DATE	PREPARED BY

COUNTY OF SANTA CLARA ROADS AND AIRPORTS DEPARTMENT

YZ (CNTY) 03-2026 DESIGNED DATE
YZ (CNTY) 03-2026 DRAWN DATE
PP (CNTY) 03-2026 CHECKED DATE

SUBMITTED:
YALI ZHANG, P.E.
ASSISTANT CIVIL ENGINEER

REGISTERED PROFESSIONAL ENGINEER YALI ZHANG No C93475 Exp.6-30-26 CIVIL STATE OF CALIFORNIA

APPROVED:
ROCELIA KMAK, P.E.
PRINCIPAL CIVIL ENGINEER

EXPRESSWAY GUARDRAIL REPLACEMENT AND SAFETY BARRIER IMPROVEMENTS

UTILITY PLAN - FOOTHILL/GRANT (LOC #2)

DRAWING No. U-3

SHT No. 7 OF 34

WORK ORDER No.	ADVERTISEMENT DATE:	CONTRACT No.	FILE No.	Scale
C3420				AS SHOWN

SCALE: 1"=20'



LEGENDS:

- CONTROL POINT
- EX WATER
- EX SEWER
- EX GAS
- EX DRAINAGE
- EX OVERHEAD CABLE
- EX ELECTRIC TELEPHONE
- EX CONDUIT
- EX TV CABLE
- EX TELEPHONE
- EX BOX CULVERT
- EX CULVERT
- EX WATER DISTRICT EASEMENT

CONTROL POINT TABLE

POINT #	NAME	STATION	OFFSET	NORTHING	EASTING	ELEVATION
①	CHZ X	10+00.00	–	1957248.7630	6126912.4960	79.868
②	PK NAIL	12+15.11	54.24' Lt	1957030.7070	6126953.3250	79.022

ALIGNMENT INFORMATION

LINE #	DIRECTION	START POINT	END POINT	LENGTH
L-LINE	S3°32'51"W	(1957432.24, 6126923.87)	(1956999.27, 6126897.03)	433.86'

NO.	REVISIONS	DATE	PREPARED BY

COUNTY OF SANTA CLARA ROADS AND AIRPORTS DEPARTMENT

YZ (CNTY)	03-2026	DESIGNED / DATE
YZ (CNTY)	03-2026	DRAWN / DATE
PP (CNTY)	03-2026	CHECKED / DATE

SUBMITTED:
YALI ZHANG, P.E.
ASSISTANT CIVIL ENGINEER

REGISTERED PROFESSIONAL ENGINEER — YALI ZHANG — No C93475 Exp.6-30-26 CIVIL — STATE OF CALIFORNIA

APPROVED:
ROCELIA KMAK, P.E.
PRINCIPAL CIVIL ENGINEER

EXPRESSWAY GUARDRAIL REPLACEMENT AND SAFETY BARRIER IMPROVEMENTS

UTILITY PLAN - LAWRENCE EXPY (LOC#3)

WORK ORDER No.	ADVERTISEMENT DATE:	CONTRACT No.	FILE No.
C3420			

DRAWING No. U-4

SHT No. 8 OF 34

Scale AS SHOWN

CONTROL POINT TABLE						
POINT #	NAME	STATION	OFFSET	NORTHING	EASTING	ELEVATION
①	IP	10+00	–	1943515.3060	6135955.5200	127.421
②	PK NAIL	10+87.42	63.45' Rt	1943425.4325	6135895.6245	128.146
③	BRASS DISC	14+69.02	–	1943046.3905	6135972.8725	131.693
④	HUB & TACK	17+24.62	–	1942788.5895	6135978.6005	133.110
⑤	HUB & TACK	21+10.92	–	1942402.2255	6135980.1165	135.920
⑥	HUB	27+36.59	–	1941779.0760	6135964.8060	139.633
⑦	HUB	30+40.86	–	1941475.1900	6135949.3880	141.582
⑧	PK NAIL	33+47.61	–	1941168.5750	6135942.1650	143.020
⑨	PK NAIL	34+19.45	8.85' Rt	1941096.8380	6135930.8260	142.873
⑩	NAIL 60D TS	34+60.84	81.87' Lt	1941054.8890	6136023.4040	142.246
⑪	NAIL 60D TS	36+07.76	–	1940908.8920	6135939.8890	145.047
⑫	IP	36+61.24	–	1940855.4720	6135940.9570	143.783

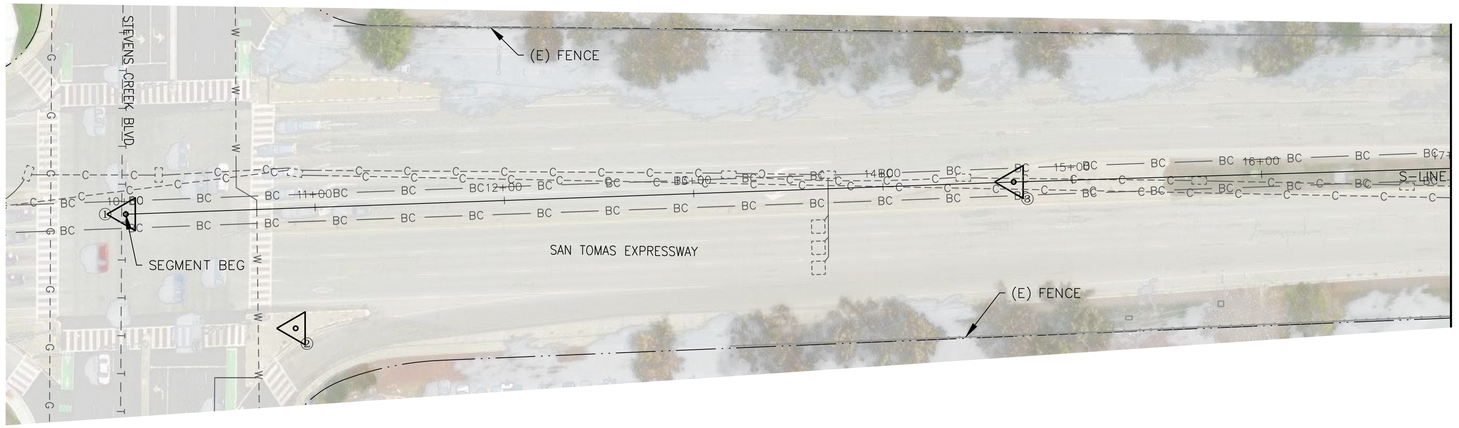

SCALE: 1"=40'

S-LINE ALIGNMENT INFORMATION				
LINE #	DIRECTION	START POINT	END POINT	LENGTH
S-LINE	S2°04'44.27"E	①	③	469.02'
S-LINE	S1°46'44.18"E	③	④	255.60'
S-LINE	S0°10'28.29"W	④	⑤	386.30'
S-LINE	S1°12'05.87"W	⑤	⑥	625.67'
S-LINE	S2°50'55.53"W	⑥	⑦	304.26'
S-LINE	S1°43'22.60"W	⑦	⑧	306.75'
S-LINE	S0°19'11.10"W	⑧	⑫	313.63'

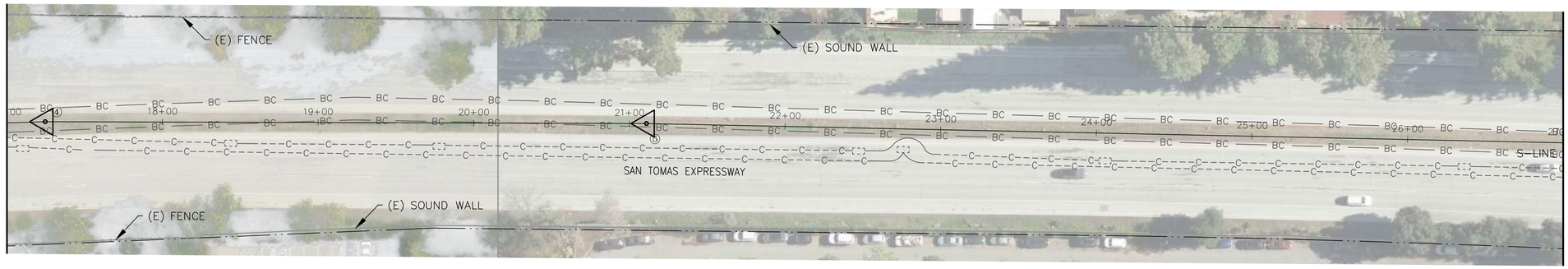

LEGENDS:

- CONTROL POINT
- COUNTY R/W
- STATE R/W
- EX WATER
- EX SEWER
- EX GAS
- EX DRAINAGE
- EX OVERHEAD CABLE
- EX ELECTRIC TELEPHONE
- EX CONDUIT
- EX TV CABLE
- EX TELEPHONE
- EX BOX CULVERT
- EX CULVERT
- EX WATER DISTRICT EASEMENT

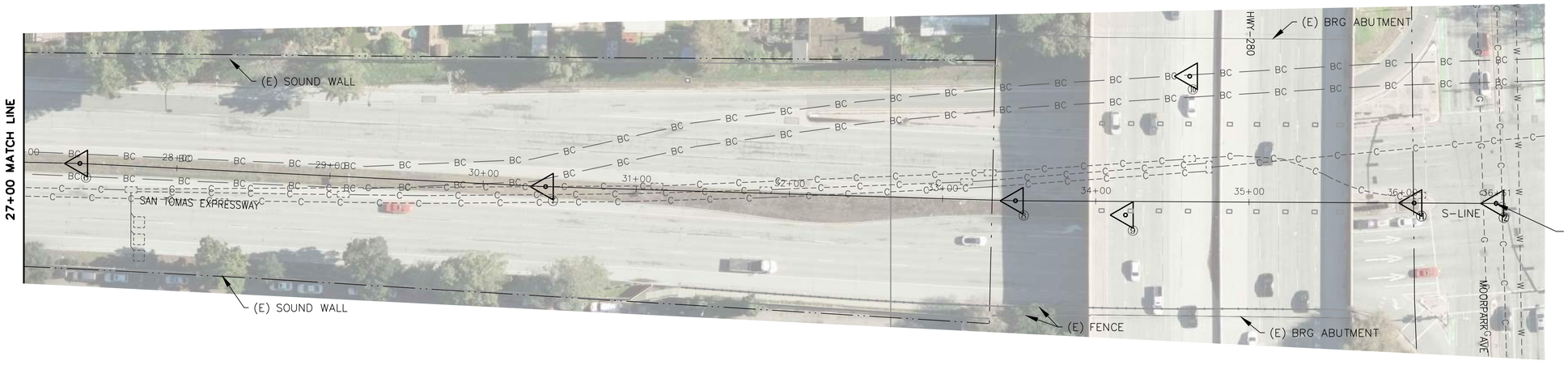

NOTE:

1. THE CALTRANS BRIDGE NUMBER FOR HWY-280 IS 37-0194.

NO.	REVISIONS	DATE	PREPARED BY

COUNTY OF SANTA CLARA ROADS AND AIRPORTS DEPARTMENT

YZ (CNTY)	03-2026	DESIGNED / DATE
YZ (CNTY)	03-2026	DRAWN / DATE
PP (CNTY)	03-2026	CHECKED / DATE

SUBMITTED:
YALI ZHANG, P.E.
ASSISTANT CIVIL ENGINEER

REGISTERED PROFESSIONAL ENGINEER — YALI ZHANG — No C93475 Exp.6-30-26 — CIVIL — STATE OF CALIFORNIA

APPROVED:
ROCELIA KMAK, P.E.
PRINCIPAL CIVIL ENGINEER

EXPRESSWAY GUARDRAIL REPLACEMENT AND SAFETY BARRIER IMPROVEMENTS

UTILITY PLAN - SAN TOMAS EXPY (LOC #4)

WORK ORDER No.	ADVERTISEMENT DATE:	CONTRACT No.	FILE No.
C3420			

DRAWING No. U-5

SHT No. 9 OF 34

Scale AS SHOWN

SCALE: 1"=40'

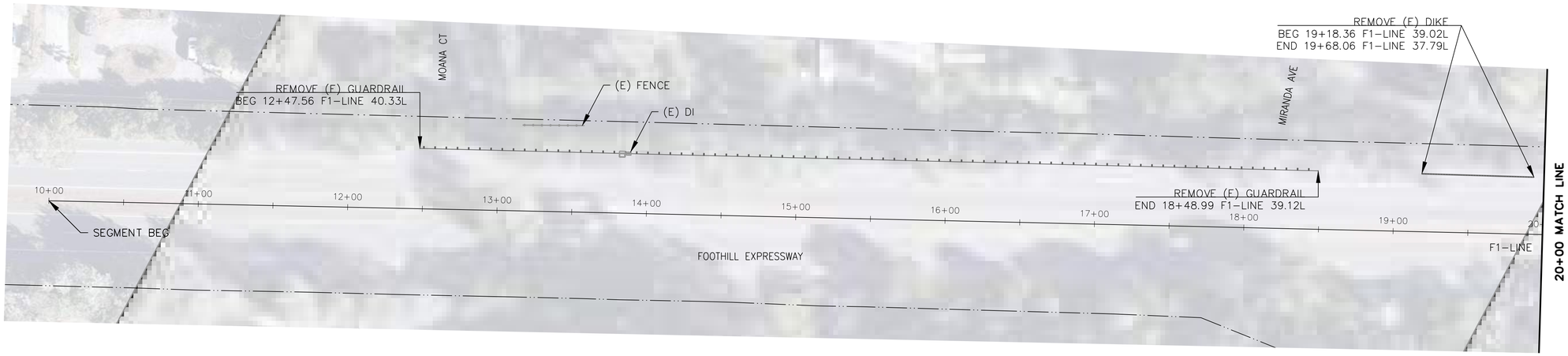

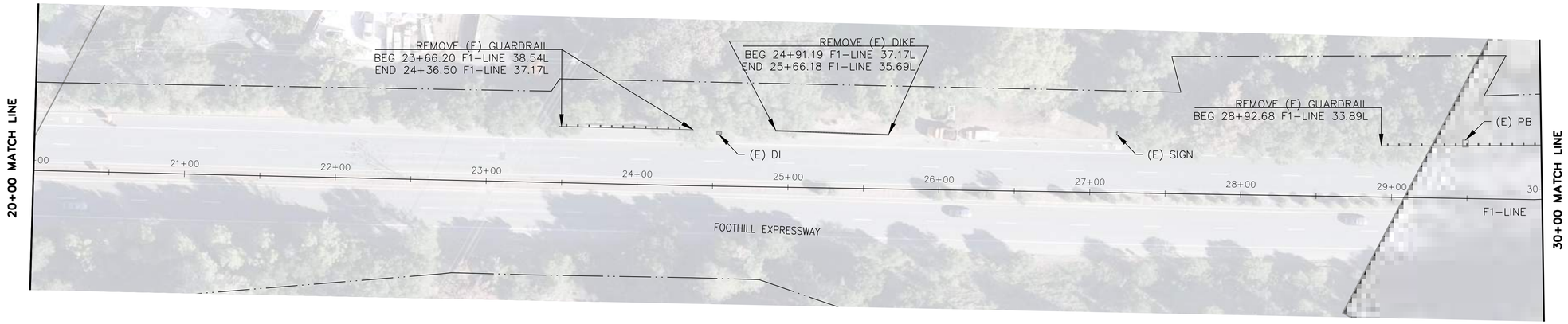

LEGENDS:

- COUNTY R/W
- REMOVE (E) GUARDRAIL
- REMOVE (E) DIKE

NOTES:

1. ALL EXISTING UTILITY INFRASTRUCTURE, DRAINAGE INLET AND SIGNS TO REMAIN AND BE PROTECTED IN PLACE UNLESS NOTED OTHERWISE.
2. PERFORM POTHOLING TO VERIFY THE LOCATION OF EXISTING UNDERGROUND UTILITIES AND AVOID POTENTIAL CONFLICTS.

ALTERNATE BID 1A

NO.	REVISIONS	DATE	PREPARED BY

COUNTY OF SANTA CLARA ROADS AND AIRPORTS DEPARTMENT

YZ (CNTY)	03-2026	DESIGNED / DATE
YZ (CNTY)	03-2026	DRAWN / DATE
PP (CNTY)	03-2026	CHECKED / DATE

SUBMITTED:
YALI ZHANG, P.E.
ASSISTANT CIVIL ENGINEER

REGISTERED PROFESSIONAL ENGINEER — YALI ZHANG — No C93475 Exp.6-30-26 — CIVIL — STATE OF CALIFORNIA

APPROVED:
ROCELIA KMAK, P.E.
PRINCIPAL CIVIL ENGINEER

EXPRESSWAY GUARDRAIL REPLACEMENT AND SAFETY BARRIER IMPROVEMENTS

DEMOLITION PLAN - FOOTHILL/EDITH (LOC #1)

DRAWING No. R-1

SHT No. 10 OF 34

WORK ORDER No.	ADVERTISEMENT DATE:	CONTRACT No.	FILE No.	Scale
C3420				AS SHOWN

SCALE: 1"=40'

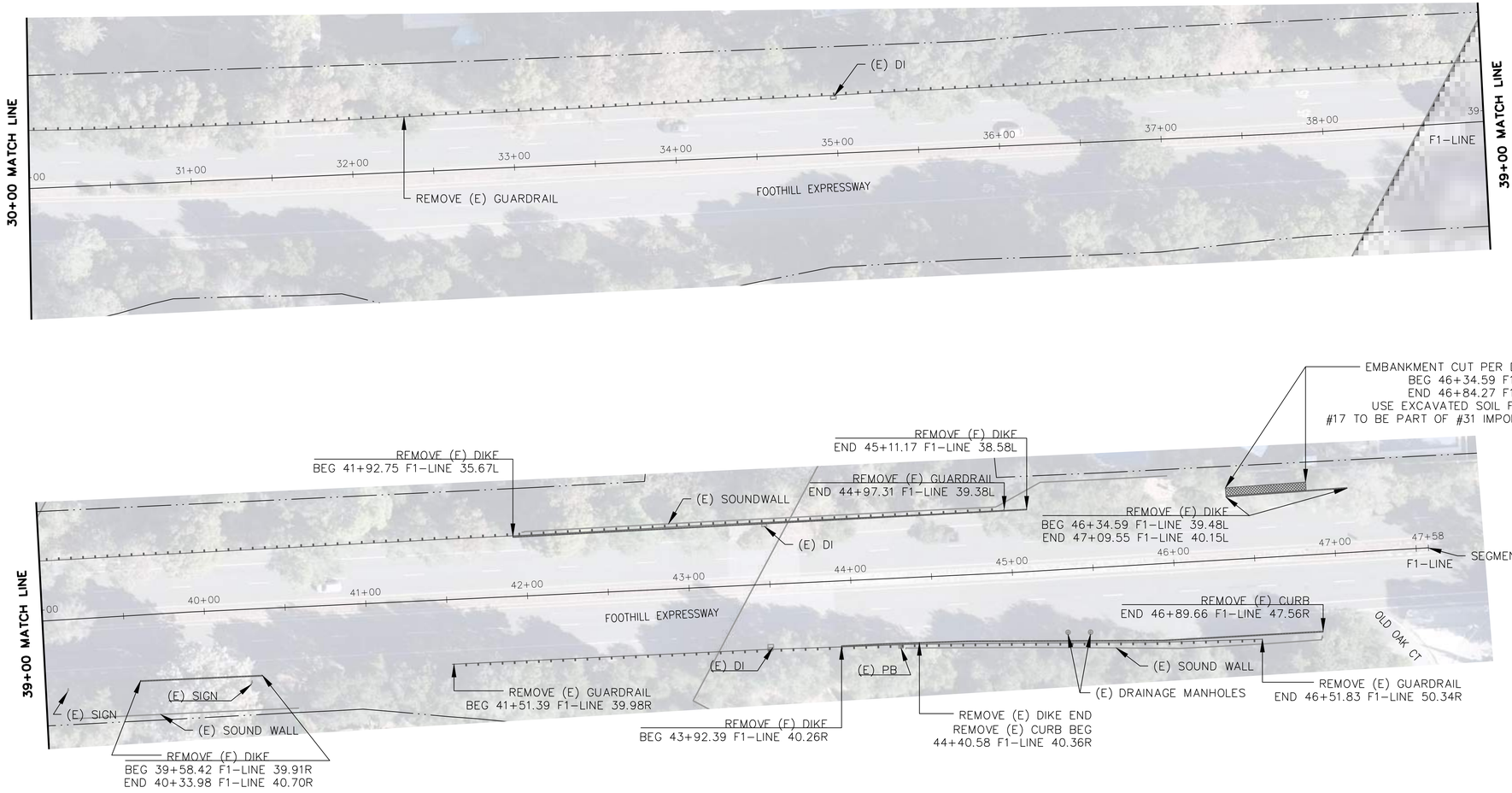

LEGENDS:

- COUNTY R/W
- REMOVE (E) GUARDRAIL
- REMOVE (E) DIKE OR EMBANKMENT

NOTES:

1. ALL EXISTING UTILITY INFRASTRUCTURE, DRAINAGE INLET AND SIGNS TO REMAIN AND BE PROTECTED IN PLACE UNLESS NOTED OTHERWISE.
2. PERFORM POTHOLING TO VERIFY THE LOCATION OF EXISTING UNDERGROUND UTILITIES AND AVOID POTENTIAL CONFLICTS.

ALTERNATE BID 1A

NO.	REVISIONS	DATE	PREPARED BY

COUNTY OF SANTA CLARA ROADS AND AIRPORTS DEPARTMENT

YZ (CNTY)	03-2026	DESIGNED DATE
YZ (CNTY)	03-2026	DRAWN DATE
PP (CNTY)	03-2026	CHECKED DATE

SUBMITTED:
YALI ZHANG, P.E.
ASSISTANT CIVIL ENGINEER

REGISTERED PROFESSIONAL ENGINEER — YALI ZHANG — No C93475 Exp.6-30-26 CIVIL — STATE OF CALIFORNIA

APPROVED:
ROCELIA KMAK, P.E.
PRINCIPAL CIVIL ENGINEER

EXPRESSWAY GUARDRAIL REPLACEMENT AND SAFETY BARRIER IMPROVEMENTS

DEMOLITION PLAN - FOOTHILL/EDITH (LOC #1)

WORK ORDER No.	ADVERTISEMENT DATE:	CONTRACT No.	FILE No.
C3420			

DRAWING No. R-2

SHT No. 11 OF 34

Scale AS SHOWN

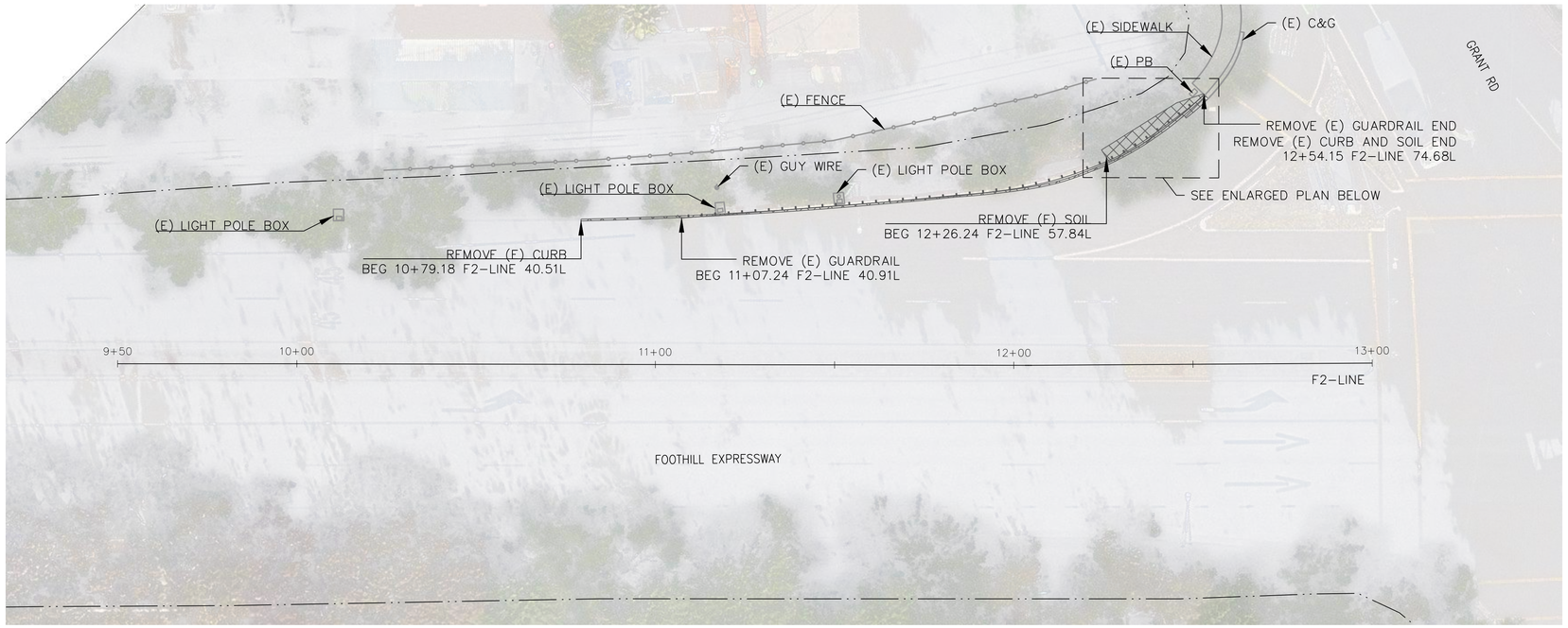

SCALE: 1"=20'



SCALE: 1"=20'

LEGENDS:

—··— COUNTY R/W

-·-·-·- REMOVE (E) GUARDRAIL

⊠⊠⊠⊠⊠⊠⊠⊠ REMOVE (E) CURB

NOTES:

1. ALL EXISTING UTILITY INFRASTRUCTURE, DRAINAGE INLET AND SIGNS TO REMAIN AND BE PROTECTED IN PLACE UNLESS NOTED OTHERWISE.
2. PERFORM POTHOLING TO VERIFY THE LOCATION OF EXISTING UNDERGROUND UTILITIES AND AVOID POTENTIAL CONFLICTS.

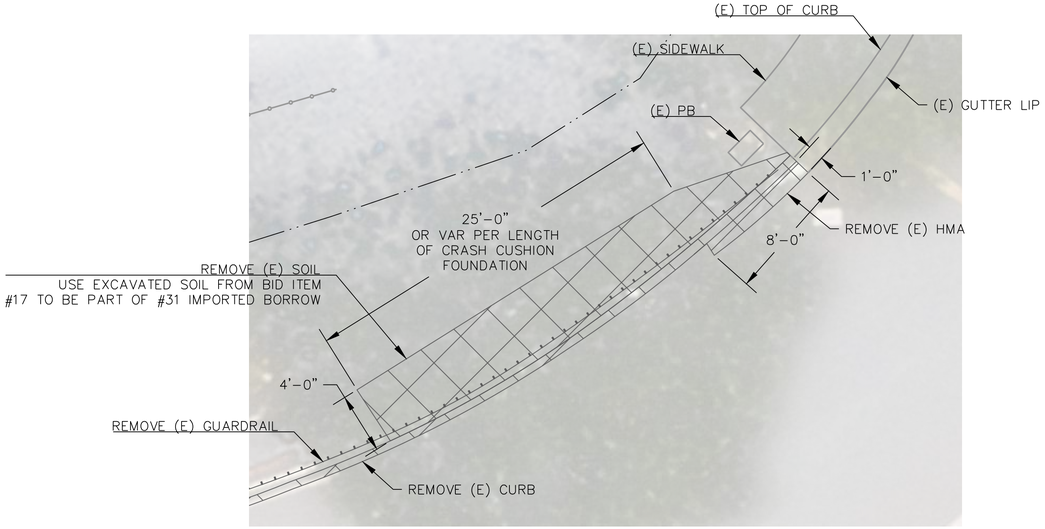

SCALE: 1"=5'

ALTERNATE BID 1A

NO.	REVISIONS	DATE	PREPARED BY

COUNTY OF SANTA CLARA ROADS AND AIRPORTS DEPARTMENT

YZ (CNTY) DESIGNED	03-2026 DATE	SUBMITTED: YALI ZHANG, P.E. ASSISTANT CIVIL ENGINEER
YZ (CNTY) DRAWN	03-2026 DATE	
PP (CNTY) CHECKED	03-2026 DATE	APPROVED: ROCELIA KMAK, P.E. PRINCIPAL CIVIL ENGINEER

REGISTERED PROFESSIONAL ENGINEER — YALI ZHANG — No C93475 Exp.6-30-26 — CIVIL — STATE OF CALIFORNIA

EXPRESSWAY GUARDRAIL REPLACEMENT AND SAFETY BARRIER IMPROVEMENTS

DEMOLITION PLAN - FOOTHILL/GRANT (LOC #2)

DRAWING No. R-3

SHT No. 12 OF 34

WORK ORDER No.	ADVERTISEMENT DATE:	CONTRACT No.	FILE No.	Scale
C3420				AS SHOWN

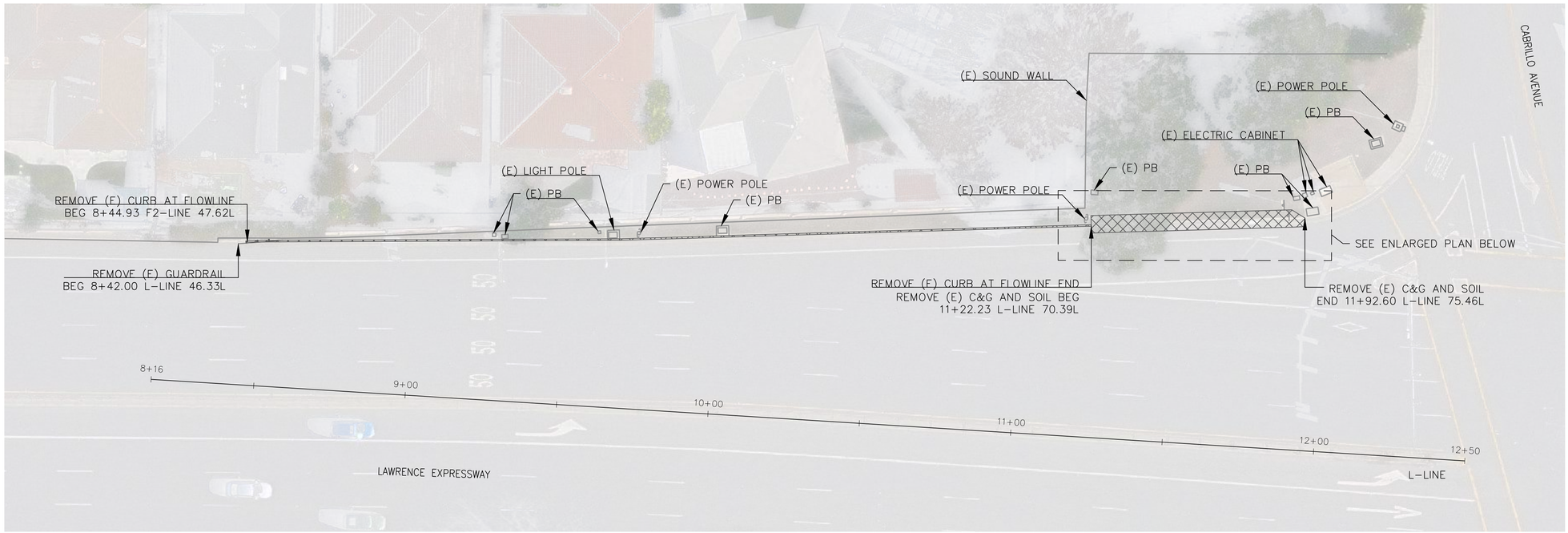

SCALE: 1"=20'

SCALE: 1"=20'

LEGENDS:

REMOVE (E) GUARDRAIL

REMOVE (E) CURB, C&G OR SOIL

NOTES:

1. ALL EXISTING UTILITY INFRASTRUCTURE, DRAINAGE INLET AND SIGNS TO REMAIN AND BE PROTECTED IN PLACE UNLESS NOTED OTHERWISE.
2. PERFORM POTHOLING TO VERIFY THE LOCATION OF EXISTING UNDERGROUND UTILITIES AND AVOID POTENTIAL CONFLICTS.

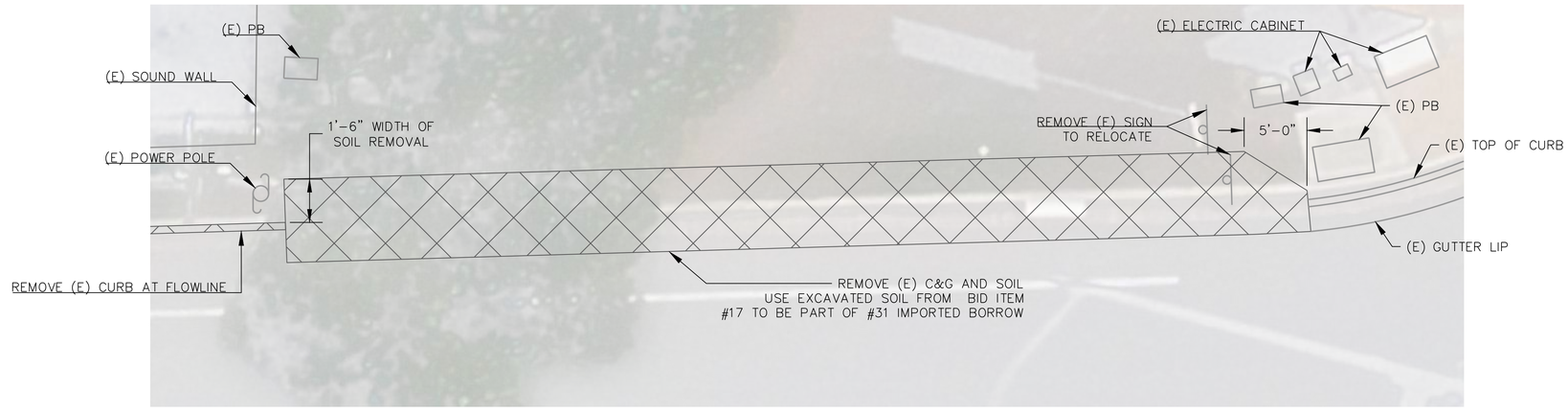

SCALE: 1"=5'

NO.	REVISIONS	DATE	PREPARED BY

COUNTY OF SANTA CLARA ROADS AND AIRPORTS DEPARTMENT

YZ (CNTY) 03-2026 DESIGNED DATE	SUBMITTED: YALI ZHANG, P.E. ASSISTANT CIVIL ENGINEER	APPROVED: ROCELIA KMAK, P.E. PRINCIPAL CIVIL ENGINEER
YZ (CNTY) 03-2026 DRAWN DATE		
PP (CNTY) 03-2026 CHECKED DATE		

REGISTERED PROFESSIONAL ENGINEER YALI ZHANG No C93475 Exp.6-30-26 CIVIL STATE OF CALIFORNIA

EXPRESSWAY GUARDRAIL REPLACEMENT AND SAFETY BARRIER IMPROVEMENTS

DEMOLITION PLAN - LAWRENCE EXPY (LOC#3)

DRAWING No. R-4

SHT No. 13 OF 34

WORK ORDER No.	ADVERTISEMENT DATE:	CONTRACT No.	FILE No.	Scale
C3420				AS SHOWN



SCALE: 1"=40'

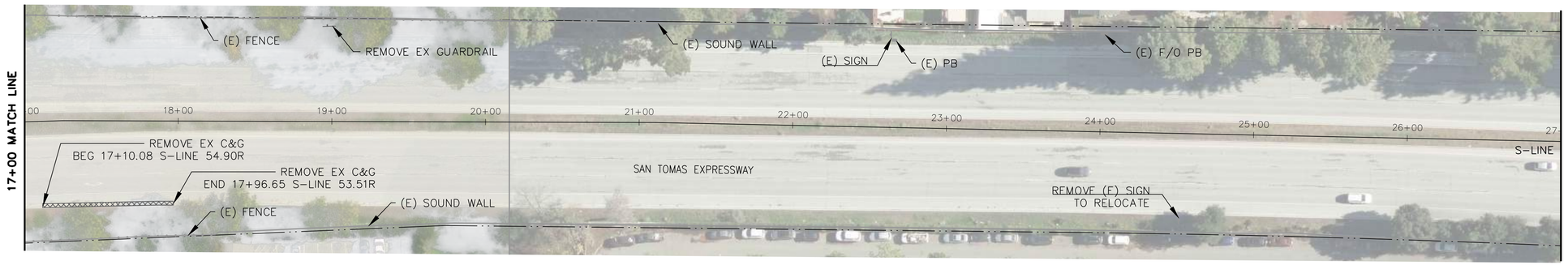

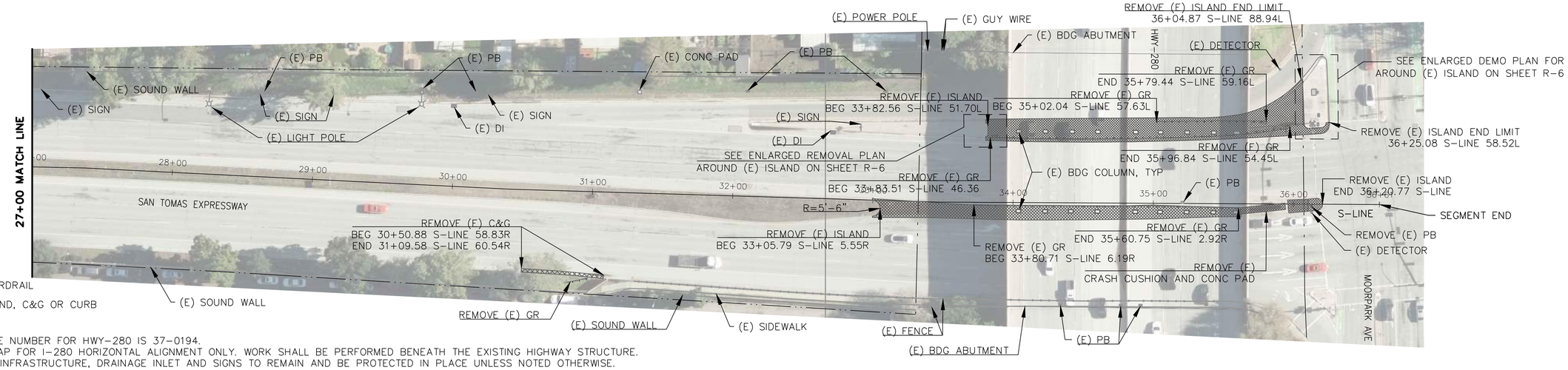

LEGENDS:

- COUNTY R/W
- STATE R/W
- REMOVE (E) GUARDRAIL
- REMOVE (E) ISLAND, C&G OR CURB

NOTES:

1. THE CALTRANS BRIDGE NUMBER FOR HWY-280 IS 37-0194.
2. REFERENCE AERIAL MAP FOR I-280 HORIZONTAL ALIGNMENT ONLY. WORK SHALL BE PERFORMED BENEATH THE EXISTING HIGHWAY STRUCTURE.
3. ALL EXISTING UTILITY INFRASTRUCTURE, DRAINAGE INLET AND SIGNS TO REMAIN AND BE PROTECTED IN PLACE UNLESS NOTED OTHERWISE.
4. PERFORM POTHOLING TO VERIFY THE LOCATION OF EXISTING UNDERGROUND UTILITIES AND AVOID POTENTIAL CONFLICTS.

NO.	REVISIONS	DATE	PREPARED BY

COUNTY OF SANTA CLARA ROADS AND AIRPORTS DEPARTMENT

YZ (CNTY)	03-2026	DESIGNED
YZ (CNTY)	03-2026	DRAWN
PP (CNTY)	03-2026	CHECKED

SUBMITTED:
YALI ZHANG, P.E.
ASSISTANT CIVIL ENGINEER

REGISTERED PROFESSIONAL ENGINEER — YALI ZHANG — No C93475 Exp.6-30-26 — CIVIL — STATE OF CALIFORNIA

APPROVED:
ROCELIA KMAK, P.E.
PRINCIPAL CIVIL ENGINEER

EXPRESSWAY GUARDRAIL REPLACEMENT AND SAFETY BARRIER IMPROVEMENTS

DEMOLITION PLAN - SAN TOMAS EXPY (LOC #4)

WORK ORDER No.	ADVERTISEMENT DATE:	CONTRACT No.	FILE No.
C3420			

DRAWING No. R-5

SHT No. 14 OF 34

Scale AS SHOWN

SCALE: 1"=5'

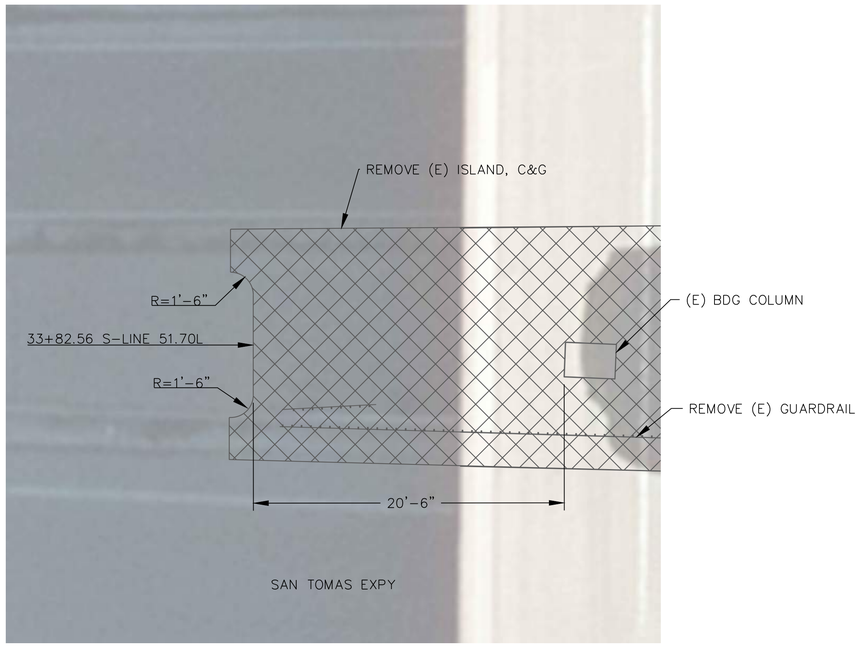

WEST MEDIAN ISLAND NORTHERN END

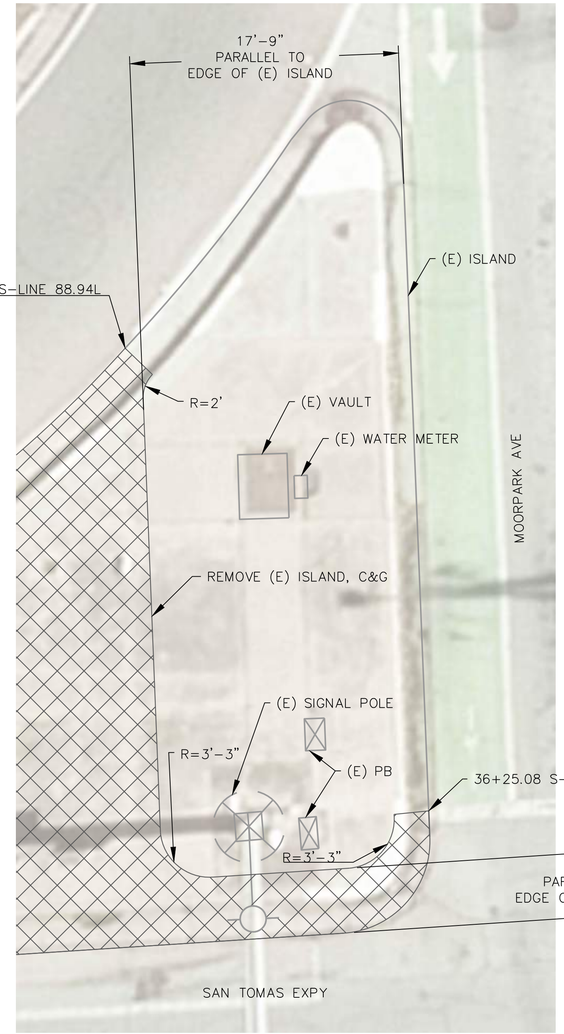

WEST MEDIAN ISLAND SOUTHERN END

LEGENDS:

- REMOVE (E) GUARDRAIL
- REMOVE (E) ISLAND OR C&G

NOTES:

1. THE CALTRANS BRIDGE NUMBER FOR HWY-280 IS 37-0194.
2. ALL EXISTING UTILITY INFRASTRUCTURE, DRAINAGE INLET AND SIGNS TO REMAIN AND BE PROTECTED IN PLACE UNLESS NOTED OTHERWISE.
3. PERFORM POTHOLING TO VERIFY THE LOCATION OF EXISTING UNDERGROUND UTILITIES AND AVOID POTENTIAL CONFLICTS.

NO.	REVISIONS	DATE	PREPARED BY

COUNTY OF SANTA CLARA ROADS AND AIRPORTS DEPARTMENT

YZ (CNTY)	03-2026	DESIGNED / DATE
YZ (CNTY)	03-2026	DRAWN / DATE
PP (CNTY)	03-2026	CHECKED / DATE

SUBMITTED:
YALI ZHANG, P.E.
ASSISTANT CIVIL ENGINEER

REGISTERED PROFESSIONAL ENGINEER — YALI ZHANG — No C93475 Exp.6-30-26 — CIVIL — STATE OF CALIFORNIA

APPROVED:
ROCELIA KMAK, P.E.
PRINCIPAL CIVIL ENGINEER

EXPRESSWAY GUARDRAIL REPLACEMENT AND SAFETY BARRIER IMPROVEMENTS

DEMOLITION PLAN - SAN TOMAS EXPY (LOC #4)

DRAWING No. R-6

SHT No. 15 OF 34

WORK ORDER No.	ADVERTISEMENT DATE:	CONTRACT No.	FILE No.	Scale
C3420				AS SHOWN

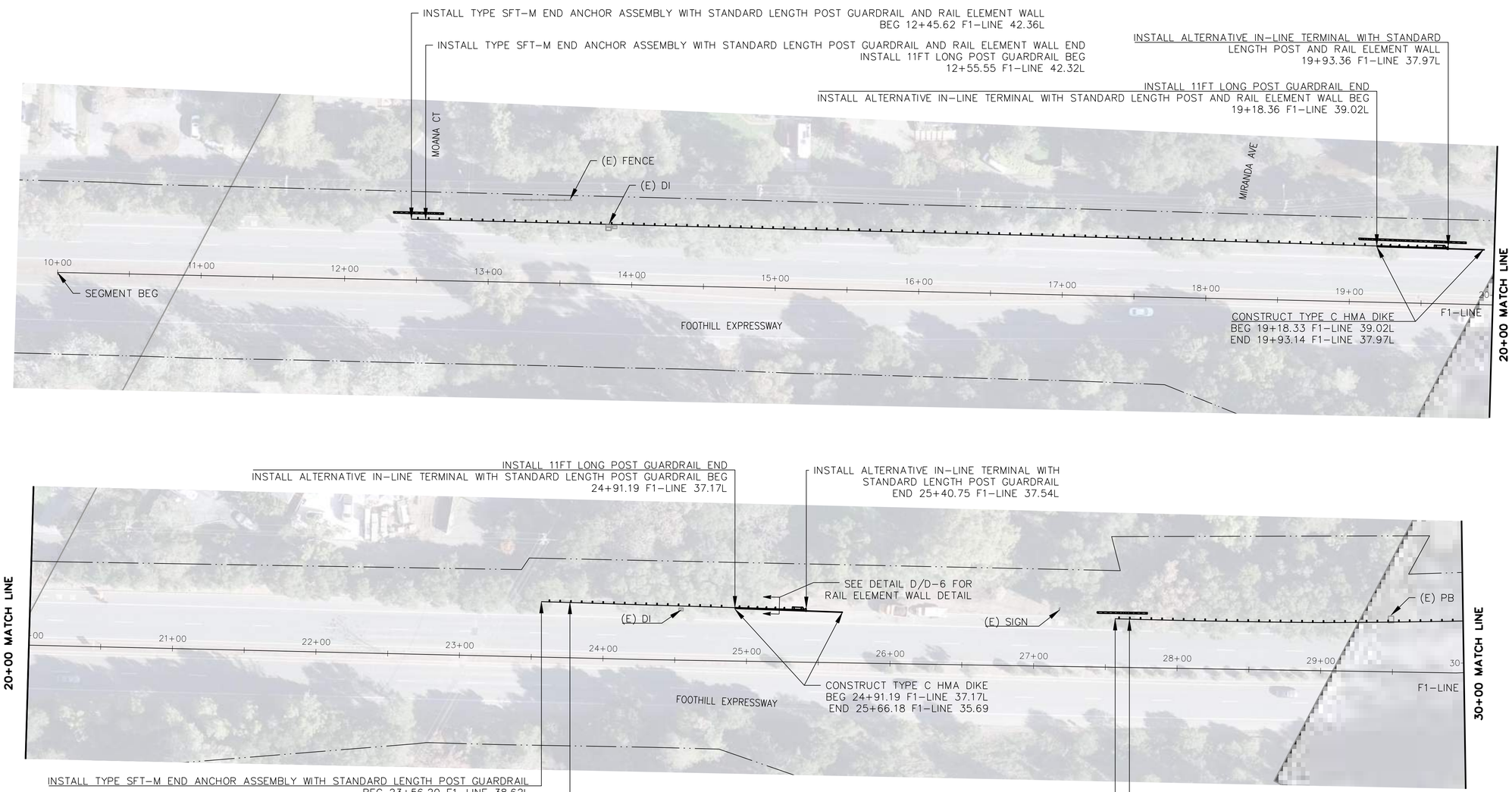

SCALE: 1"=40'

LEGENDS:

- COUNTY R/W
- GUARDRAIL
- GUARDRAIL END TERMINAL
- TYPE C HMA DIKE
- RAIL ELEMENT WALL WITH CABLE RAILING

NOTES:

1. ALL EXISTING UTILITY INFRASTRUCTURE, DRAINAGE INLET AND SIGNS TO REMAIN AND BE PROTECTED IN PLACE UNLESS NOTED OTHERWISE.
2. PERFORM POTHOLING TO VERIFY THE LOCATION OF EXISTING UNDERGROUND UTILITIES AND AVOID POTENTIAL CONFLICTS.
3. SHIFT GUARDRAIL POST AS NEEDED TO AVOID CONFLICT WITH EXISTING UTILITY INFRASTRUCTURES AND DRAINAGE INLET PER FIELD CONDITIONS.
4. SEE DETAIL A/D-6 FOR 11FT LONG POST GUARDRAIL.
5. SEE DETAIL D/D-6 FOR RAIL ELEMENT WALL.
6. SEE SSP A77N4 FOR GUARDRAIL DIKE POSITIONING.

ALTERNATE BID 1A

NO.	REVISIONS	DATE	PREPARED BY

COUNTY OF SANTA CLARA ROADS AND AIRPORTS DEPARTMENT

YZ (CNTY)	03-2026	DESIGNED / DATE
YZ (CNTY)	03-2026	DRAWN / DATE
PP (CNTY)	03-2026	CHECKED / DATE

SUBMITTED:
YALI ZHANG, P.E.
ASSISTANT CIVIL ENGINEER

REGISTERED PROFESSIONAL ENGINEER — YALI ZHANG — No C93475 Exp.6-30-26 — CIVIL — STATE OF CALIFORNIA

APPROVED:
ROCELIA KMAK, P.E.
PRINCIPAL CIVIL ENGINEER

EXPRESSWAY GUARDRAIL REPLACEMENT AND SAFETY BARRIER IMPROVEMENTS

CONSTRUCTION PLAN - FOOTHILL/EDITH (LOC #1)

WORK ORDER No.	ADVERTISEMENT DATE:	CONTRACT No.	FILE No.
C3420			

DRAWING No. C-1

SHT No. 16 OF 34

Scale AS SHOWN

SCALE: 1"=40'

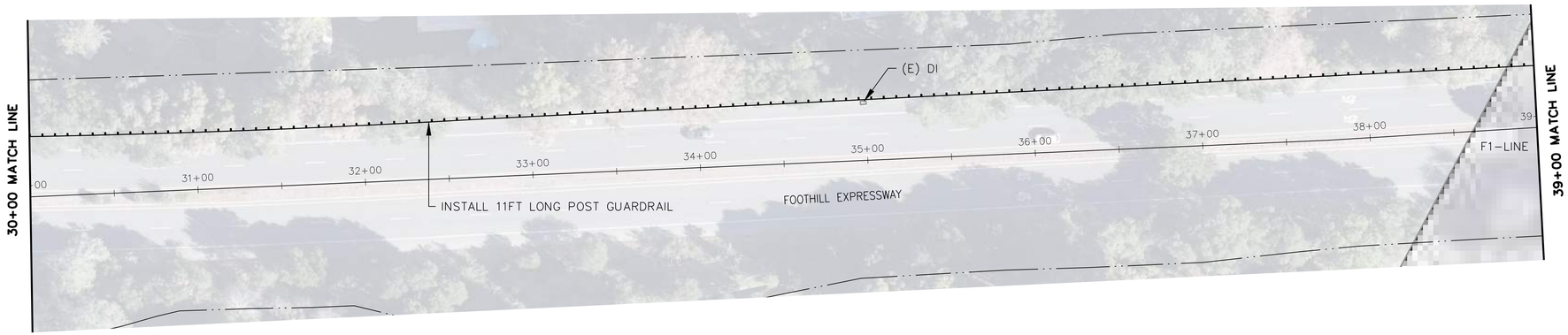

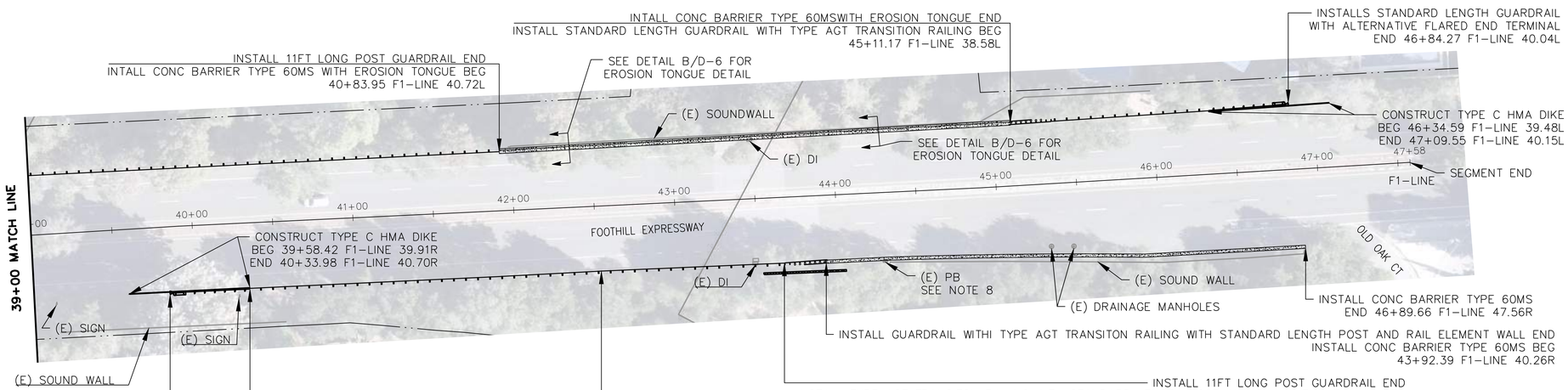

LEGENDS:

- COUNTY R/W
- GUARDRAIL
- GUARDRAIL END TERMINAL
- TYPE AGT TRANSITON RAILING
- TYPE C HMA DIKE
- CONC BARRIER OR EROSION TONGUE
- RAIL ELEMENT WALL WITH CABLE RAILING

NOTES:

1. ALL EXISTING UTILITY INFRASTRUCTURE, DRAINAGE INLET AND SIGNS TO REMAIN AND BE PROTECTED IN PLACE UNLESS NOTED OTHERWISE.
2. PERFORM POTHOLING TO VERIFY THE LOCATION OF EXISTING UNDERGROUND UTILITIES AND AVOID POTENTIAL CONFLICTS.
3. SHIFT GUARDRAIL POST AS NEEDED TO AVOID CONFLICT WITH EXISTING UTILITY INFRASTRUCTURES AND DRAINAGE INLET PER FIELD CONDITIONS.
4. SEE DETAIL A/D–6 FOR 11FT LONG POST GUARDRAIL.
5. SEE DETAIL D/D–6 FOR RAIL ELEMENT WALL.
6. SEE SSP A77N4 FOR GUARDRAIL DIKE POSITIONING.
7. SEE SHEET D–1 FOR CONCRETE BARRIER (TYPE 60MS) AT EXISTING ELECTRICAL INFRASTRUCTURE OR DRAINAGE INLET.
8. MAINTAIN A MINIMUM 3'–0" CLEAR SPACE BETWEEN THE FACE OF CONCRETE BARRIER AND THE FACE OF EXISTING SOUND WALL, TYPICAL.

ALTERNATE BID 1A

NO.	REVISIONS	DATE	PREPARED BY

COUNTY OF SANTA CLARA ROADS AND AIRPORTS DEPARTMENT

YZ (CNTY)	03–2026	DATE
DESIGNED YZ (CNTY)	03–2026	DATE
DRAWN PP (CNTY)	03–2026	DATE
CHECKED		DATE

SUBMITTED:
YALI ZHANG, P.E.
ASSISTANT CIVIL ENGINEER

REGISTERED PROFESSIONAL ENGINEER — YALI ZHENG — No C93475 Exp.6-30-26 — CIVIL — STATE OF CALIFORNIA

APPROVED:
ROCELIA KMAK, P.E.
PRINCIPAL CIVIL ENGINEER

EXPRESSWAY GUARDRAIL REPLACEMENT AND SAFETY BARRIER IMPROVEMENTS

CONSTRUCTION PLAN - FOOTHILL/EDITH (LOC #1)

DRAWING No. C-2

SHT No. 17 OF 34

WORK ORDER No.	ADVERTISEMENT DATE:	CONTRACT No.	FILE No.	Scale
C3420				AS SHOWN

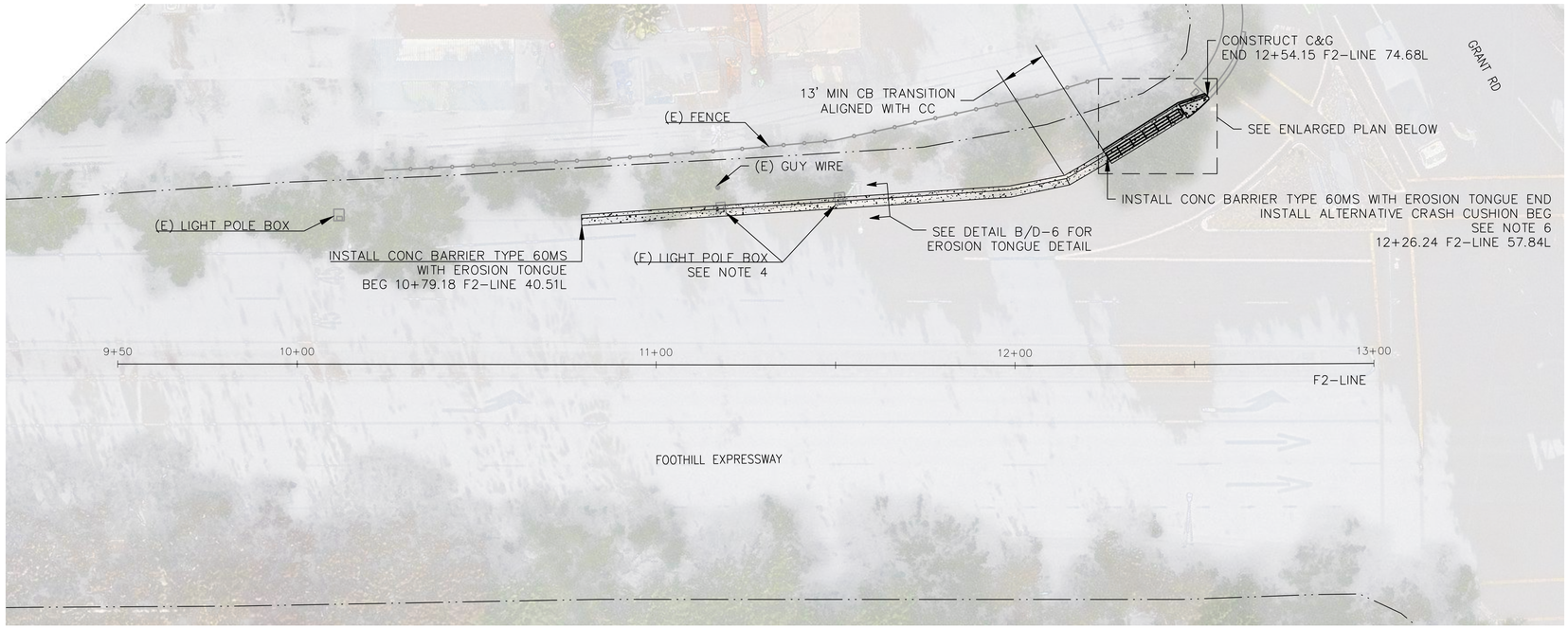

SCALE: 1"=20'

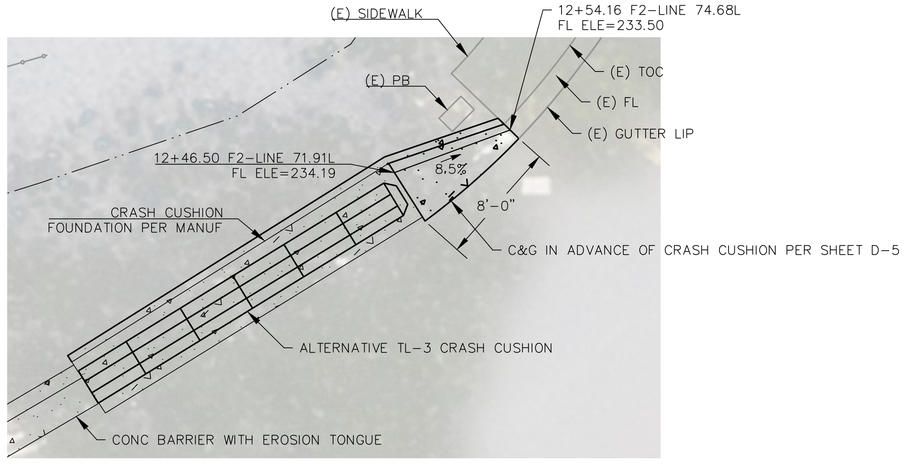

SCALE: 1"=5'

LEGENDS:

- COUNTY R/W
- CRASH CUSHION
- CONC BARRIER, EROSION TONGUE, CRASH CUSHION FOUNDATION OR C&G

NOTES:

1. ALL EXISTING UTILITY INFRASTRUCTURE, DRAINAGE INLET AND SIGNS TO REMAIN AND BE PROTECTED IN PLACE UNLESS NOTED OTHERWISE.
2. PERFORM POTHOLING TO VERIFY THE LOCATION OF EXISTING UNDERGROUND UTILITIES AND AVOID POTENTIAL CONFLICTS.
3. PROVIDE TEMPORARY K-RAIL PROTECTION FOR ALL CONCRETE BARRIER LOCATIONS DURING CONSTRUCTION PER DETAIL C/D-6.
4. SEE SHEET D-1 FOR CONCRETE BARRIER (TYPE 60MS) AT EXISTING ELECTRICAL INFRASTRUCTURE OR DRAINAGE INLET.
5. SEE SSP A76G FOR CONCRETE BARRIER TYPE 60MS.
6. SEE SSP A76HA FOR CONCRETE BARRIER TYPE 60MS CONNECTION TO CRASH CUSHION.

ALTERNATE BID 1A

NO.	REVISIONS	DATE	PREPARED BY

COUNTY OF SANTA CLARA ROADS AND AIRPORTS DEPARTMENT

YZ (CNTY) DESIGNED	03-2026 DATE	SUBMITTED: YALI ZHANG, P.E. ASSISTANT CIVIL ENGINEER
YZ (CNTY) DRAWN	03-2026 DATE	REGISTERED PROFESSIONAL ENGINEER YALI ZHENG No C93475 Exp.6-30-26 CIVIL STATE OF CALIFORNIA
PP (CNTY) CHECKED	03-2026 DATE	APPROVED: ROCELIA KMAK, P.E. PRINCIPAL CIVIL ENGINEER

EXPRESSWAY GUARDRAIL REPLACEMENT AND SAFETY BARRIER IMPROVEMENTS

CONSTRUCTION PLAN - FOOTHILL/GRANT (LOC #2)

WORK ORDER No.	ADVERTISEMENT DATE:	CONTRACT No.	FILE No.
C3420			

DRAWING No. C-3

SHT No. 18 OF 34

Scale AS SHOWN

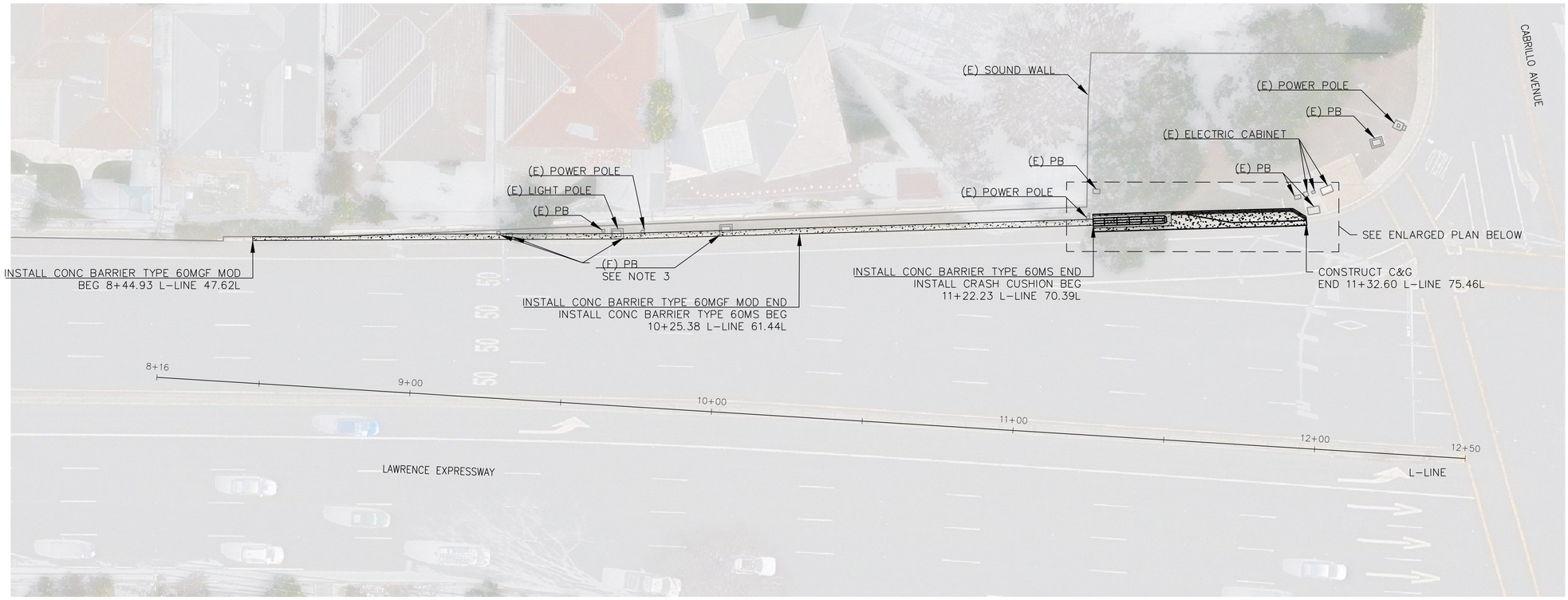

SCALE: 1"=20'

LEGENDS:

- COUNTY R/W
- CRASH CUSHION
- CONC BARRIER, EROSION TONGUE, CRASH CUSHION FOUNDATION OR C&G

NOTES:

1. ALL EXISTING UTILITY INFRASTRUCTURE, DRAINAGE INLET AND SIGNS TO REMAIN AND BE PROTECTED IN PLACE UNLESS NOTED OTHERWISE.
2. PERFORM POTHOLING TO VERIFY THE LOCATION OF EXISTING UNDERGROUND UTILITIES AND AVOID POTENTIAL CONFLICTS.
3. SEE SHEET D-1 FOR CONCRETE BARRIER (SIMILAR TO TYPE 60MS) AT EXISTING ELECTRICAL INFRASTRUCTURE OR DRAINAGE INLET.
4. SEE SSP A76G FOR CONCRETE BARRIER TYPE 60MS.
5. SEE SHEET D-2 FOR CONC BARRIER (TYPE 60MGF MOD).

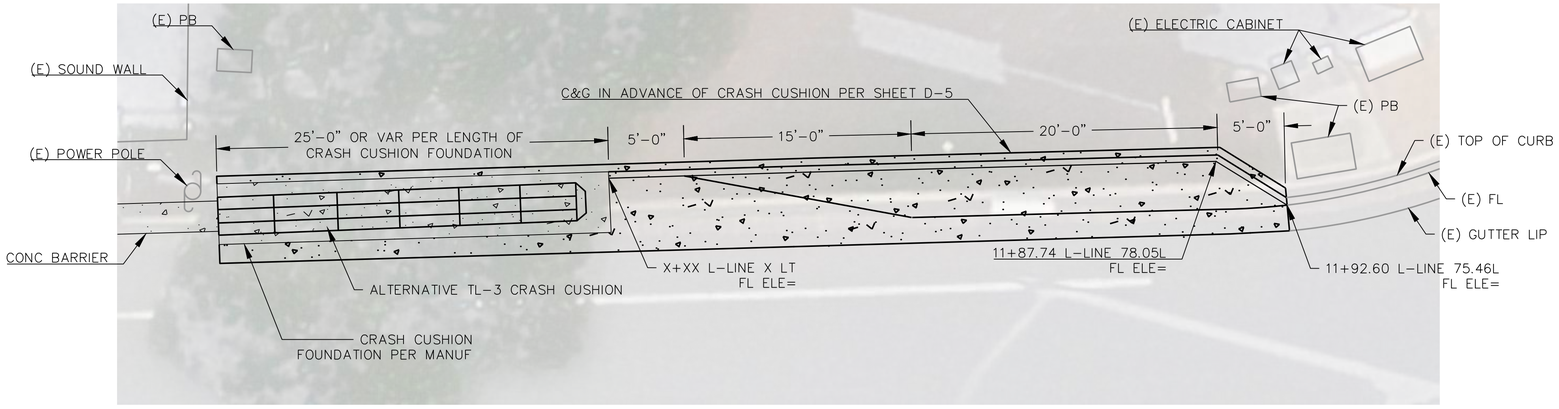

SCALE: 1"=5'

NO.	REVISIONS	DATE	PREPARED BY

COUNTY OF SANTA CLARA ROADS AND AIRPORTS DEPARTMENT

YZ (CNTY) DESIGNED	03-2026 DATE
YZ (CNTY) DRAWN	03-2026 DATE
PP (CNTY) CHECKED	03-2026 DATE

SUBMITTED:
YALI ZHANG, P.E.
ASSISTANT CIVIL ENGINEER

REGISTERED PROFESSIONAL ENGINEER — YALI ZHANG — No C93475 Exp.6-30-26 CIVIL — STATE OF CALIFORNIA

APPROVED:
ROCELIA KMAK, P.E.
PRINCIPAL CIVIL ENGINEER

EXPRESSWAY GUARDRAIL REPLACEMENT AND SAFETY BARRIER IMPROVEMENTS

CONSTRUCTION PLAN - LAWRENCE EXPY (LOC#3)

WORK ORDER No.	ADVERTISEMENT DATE:	CONTRACT No.	FILE No.
C3420			

DRAWING No. C-4

SHT No. 19 OF 34

Scale AS SHOWN

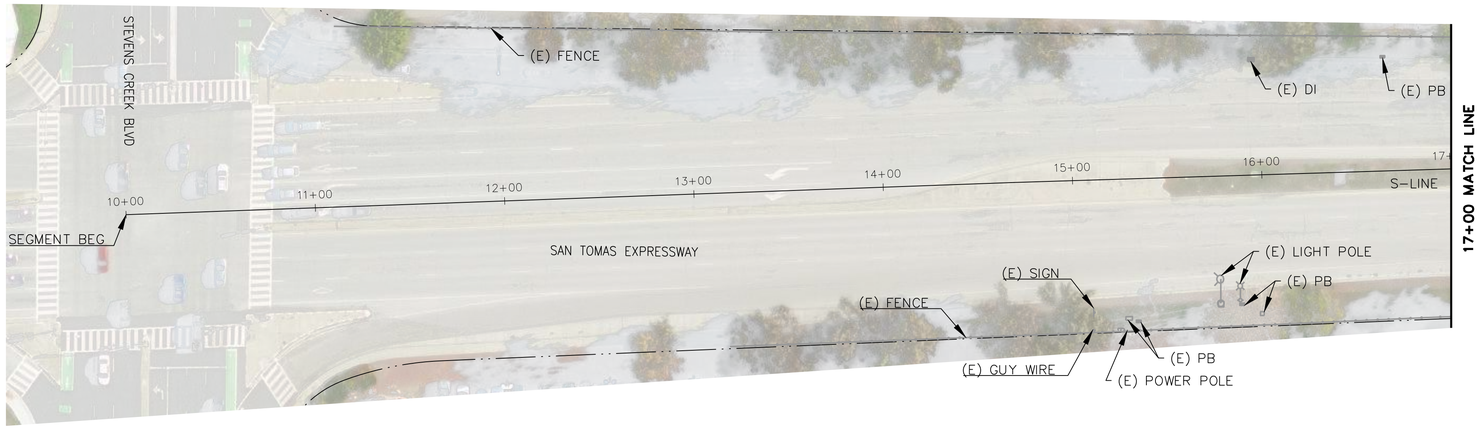

SCALE: 1"=40'

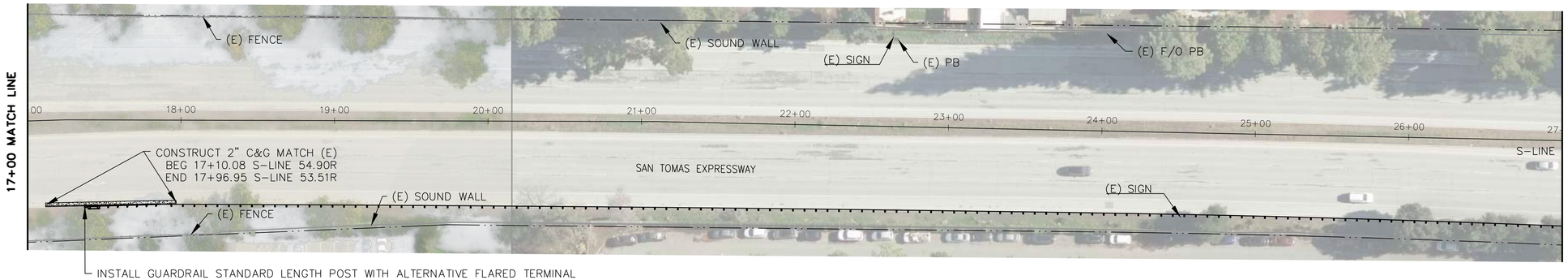

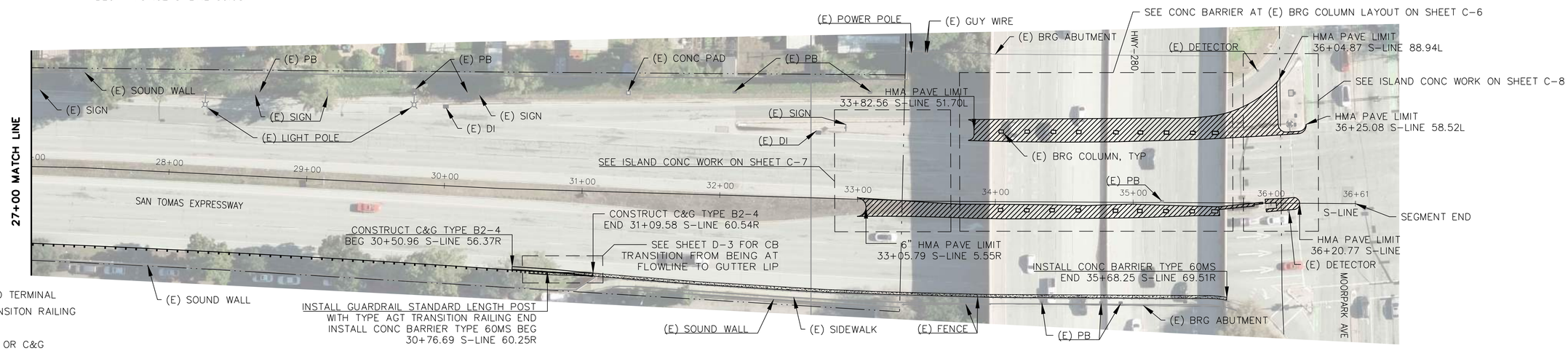

LEGENDS:

- COUNTY R/W
- STATE R/W
- GUARDRAIL
- GUARDRAIL END TERMINAL
- TYPE AGT TRANSITON RAILING
- HMA PAVING
- CONC BARRIER OR C&G

NOTES:

1. THE CALTRANS BRIDGE NUMBER FOR HWY-280 IS 37-0194.
2. REFERENCE AERIAL MAP FOR I-280 HORIZONTAL ALIGNMENT ONLY. WORK SHALL BE PERFORMED BENEATH THE EXISTING HIGHWAY STRUCTURE.
3. ALL EXISTING UTILITY INFRASTRUCTURE, DRAINAGE INLET AND SIGNS TO REMAIN AND BE PROTECTED IN PLACE UNLESS NOTED OTHERWISE.
4. PERFORM POTHOLING TO VERIFY THE LOCATION OF EXISTING UNDERGROUND UTILITIES AND AVOID POTENTIAL CONFLICTS.
5. SHIFT GUARDRAIL POST AS NEEDED TO AVOID CONFLICT WITH EXISTING UTILITY INFRASTRUCTURES AND DRAINAGE INLET PER FIELD CONDITIONS.

NO.	REVISIONS	DATE	PREPARED BY

COUNTY OF SANTA CLARA ROADS AND AIRPORTS DEPARTMENT

YZ (CNTY)	03-2026	DESIGNED / DATE
YZ (CNTY)	03-2026	DRAWN / DATE
PP (CNTY)	03-2026	CHECKED / DATE

SUBMITTED: YALI ZHANG, P.E. ASSISTANT CIVIL ENGINEER

REGISTERED PROFESSIONAL ENGINEER — YALI ZHENG — No C93475 Exp.6-30-26 — CIVIL — STATE OF CALIFORNIA

APPROVED: ROCELIA KMAK, P.E. PRINCIPAL CIVIL ENGINEER

EXPRESSWAY GUARDRAIL REPLACEMENT AND SAFETY BARRIER IMPROVEMENTS

CONSTRUCTION PLAN - SAN TOMAS EXPY (LOC #4)

WORK ORDER No.	ADVERTISEMENT DATE:	CONTRACT No.	FILE No.
C3420			

DRAWING No. C-5

SHT No. 20 OF 34

Scale AS SHOWN

SCALE: 1"=10'

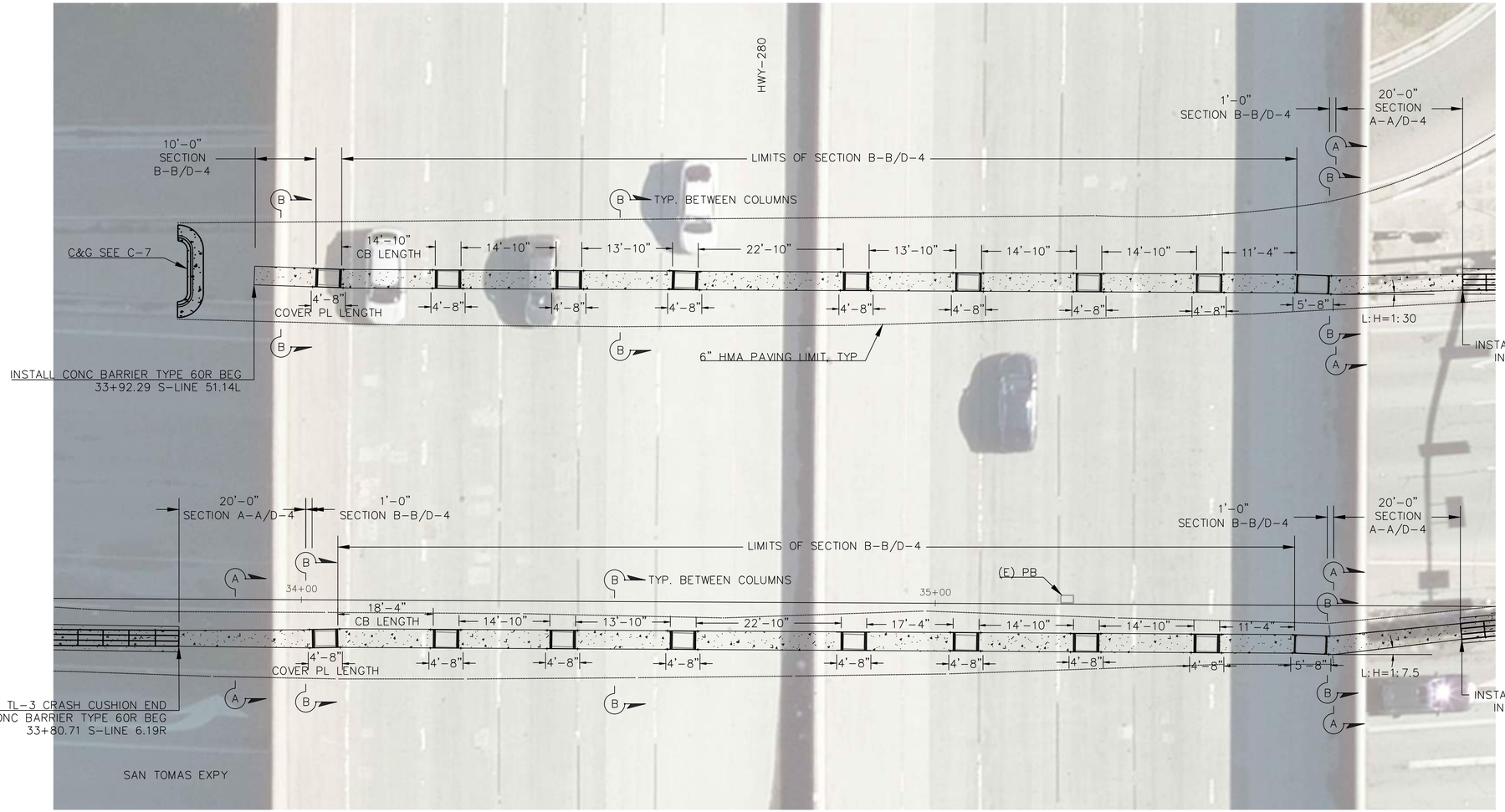

LEGENDS:

- COUNTY R/W
- STATE R/W
- HMA PAVING LIMIT
- CONC BARRIER, CRASH CUSHION FOUNDATION OR C&G
- CRASH CUSHION

NOTES:

1. THE CALTRANS BRIDGE NUMBER FOR HWY-280 IS 37-0194.
2. REFERENCE AERIAL MAP FOR I-280 HORIZONTAL ALIGNMENT ONLY. WORK SHALL BE PERFORMED BENEATH THE EXISTING HIGHWAY STRUCTURE.
3. ALL EXISTING UTILITY INFRASTRUCTURE, DRAINAGE INLET AND SIGNS TO REMAIN AND BE PROTECTED IN PLACE UNLESS NOTED OTHERWISE.
4. PERFORM POTHOLING TO VERIFY THE LOCATION OF EXISTING UNDERGROUND UTILITIES AND AVOID POTENTIAL CONFLICTS.
5. SEE SHEET D-4 FOR CONCRETE BARRIER (TYPE 60R) AT EXISTING BRIDGE COLUMN DETAILS.

NO.	REVISIONS	DATE	PREPARED BY

COUNTY OF SANTA CLARA ROADS AND AIRPORTS DEPARTMENT

YZ (CNTY)	03-2026
DESIGNED	DATE
YZ (CNTY)	03-2026
DRAWN	DATE
PP (CNTY)	03-2026
CHECKED	DATE

SUBMITTED:
YALI ZHANG, P.E.
ASSISTANT CIVIL ENGINEER

REGISTERED PROFESSIONAL ENGINEER — YALI ZHANG — No C93475 Exp.6-30-26 — CIVIL — STATE OF CALIFORNIA

APPROVED:
ROCELIA KMAK, P.E.
PRINCIPAL CIVIL ENGINEER

EXPRESSWAY GUARDRAIL REPLACEMENT AND SAFETY BARRIER IMPROVEMENTS

CONSTRUCTION PLAN - SAN TOMAS EXPY (LOC #4)

DRAWING No. C-6

SHT No. 21 OF 34

WORK ORDER No.	ADVERTISEMENT DATE:	CONTRACT No.	FILE No.	Scale
C3420				AS SHOWN

SCALE: 1"=5'

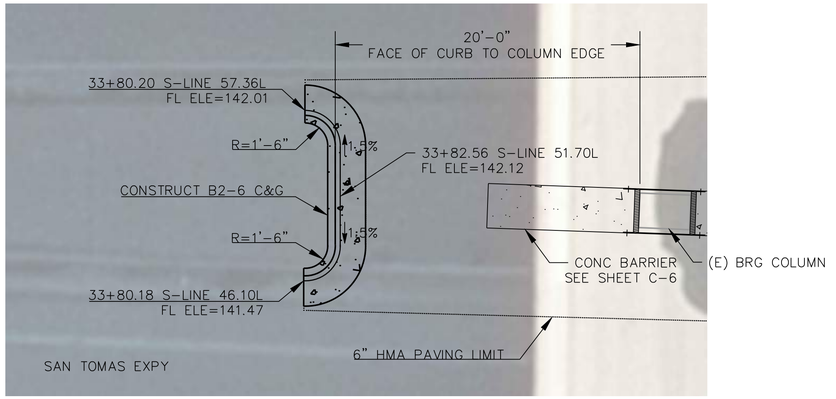

EAST MEDIAN ISLAND NORTHERN END

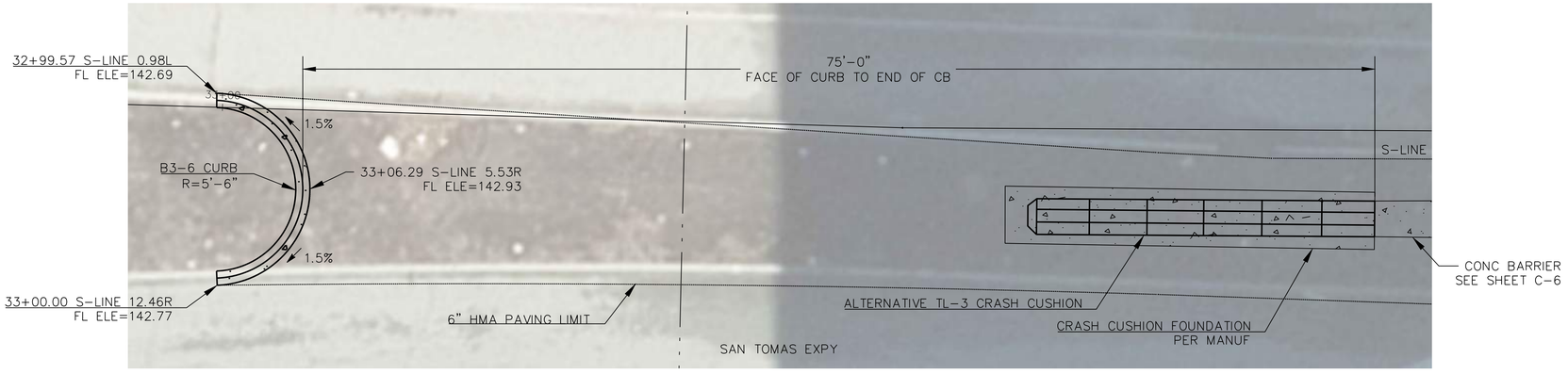

WEST MEDIAN ISLAND NORTHERN END

LEGENDS:

- STATE R/W
- HMA PAVING LIMIT
- CONC BARRIER, CRASH CUSHION FOUNDATION CURB OR C&G
- CRASH CUSHION

NOTES:

1. THE CALTRANS BRIDGE NUMBER FOR HWY-280 IS 37-0194.
2. ALL EXISTING UTILITY INFRASTRUCTURE, DRAINAGE INLET AND SIGNS TO REMAIN AND BE PROTECTED IN PLACE UNLESS NOTED OTHERWISE.
3. PERFORM POTHOLING TO VERIFY THE LOCATION OF EXISTING UNDERGROUND UTILITIES AND AVOID POTENTIAL CONFLICTS.
4. SEE SHEET D-4 FOR CONCRETE BARRIER (TYPE 60R) AT EXISTING BRIDGE COLUMN DETAILS.

NO.	REVISIONS	DATE	PREPARED BY

COUNTY OF SANTA CLARA ROADS AND AIRPORTS DEPARTMENT

YZ (CNTY) 03-2026 DESIGNED DATE	SUBMITTED: YALI ZHANG, P.E. ASSISTANT CIVIL ENGINEER	APPROVED: ROCELIA KMAK, P.E. PRINCIPAL CIVIL ENGINEER
YZ (CNTY) 03-2026 DRAWN DATE	REGISTERED PROFESSIONAL ENGINEER YALI ZHANG No C93475 Exp.6-30-26 CIVIL STATE OF CALIFORNIA	
PP (CNTY) 03-2026 CHECKED DATE		

EXPRESSWAY GUARDRAIL REPLACEMENT AND SAFETY BARRIER IMPROVEMENTS

CONSTRUCTION PLAN - SAN TOMAS EXPY (LOC #4)

DRAWING No. C-7

SHT No. 22 OF 34

WORK ORDER No.	ADVERTISEMENT DATE:	CONTRACT No.	FILE No.	Scale
C3420				AS SHOWN

SCALE: 1"=5'

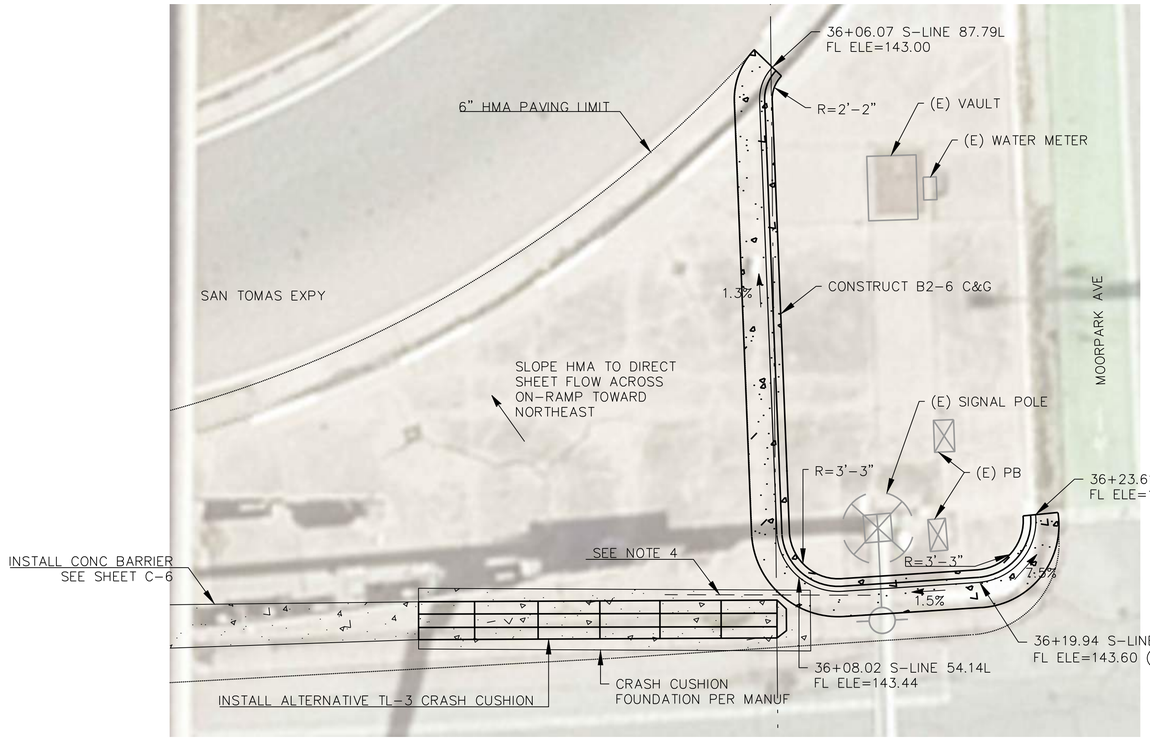

EAST MEDIAN ISLAND SOUTHERN END

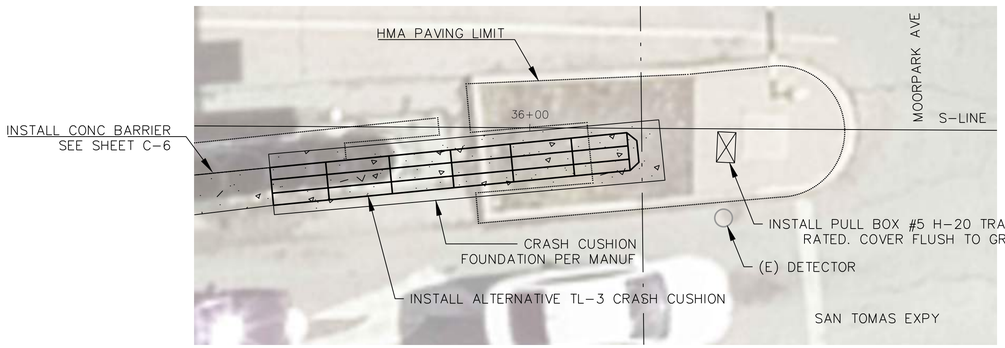

WEST MEDIAN ISLAND SOUTHERN END

LEGENDS:

- STATE R/W
- HMA PAVING LIMIT
- CONC BARRIER, CRASH CUSHION FOUNDATION OR C&G
- CRASH CUSHION

NOTES:

1. THE CALTRANS BRIDGE NUMBER FOR HWY-280 IS 37-0194.
2. ALL EXISTING UTILITY INFRASTRUCTURE, DRAINAGE INLET AND SIGNS TO REMAIN AND BE PROTECTED IN PLACE UNLESS NOTED OTHERWISE.
3. PERFORM POTHOLING TO VERIFY THE LOCATION OF EXISTING UNDERGROUND UTILITIES AND AVOID POTENTIAL CONFLICTS.
4. SEE SHEET D-4 FOR CONCRETE BARRIER (TYPE 60R) AT EXISTING BRIDGE COLUMN DETAILS.
5. THE EASTERLY SIDE OF THE CONC BARRIER SHALL BE LOCATED WEST OF THE PROPOSED FACE OF CURB. THE CRASH CUSHION SHALL NOT BE POSITIONED DIRECTLY IN FRONT THE CURB.

NO.	REVISIONS	DATE	PREPARED BY

COUNTY OF SANTA CLARA ROADS AND AIRPORTS DEPARTMENT

YZ (CNTY)	03-2026	DESIGNED DATE
YZ (CNTY)	03-2026	DRAWN DATE
PP (CNTY)	03-2026	CHECKED DATE

SUBMITTED: YALI ZHANG, P.E. ASSISTANT CIVIL ENGINEER

REGISTERED PROFESSIONAL ENGINEER YALI ZHANG No C93475 Exp.6-30-26 CIVIL STATE OF CALIFORNIA

APPROVED: ROCELIA KMAK, P.E. PRINCIPAL CIVIL ENGINEER

EXPRESSWAY GUARDRAIL REPLACEMENT AND SAFETY BARRIER IMPROVEMENTS

CONSTRUCTION PLAN - SAN TOMAS EXPY (LOC #4)

DRAWING No. C-8

SHT No. 23 OF 34

WORK ORDER No.	ADVERTISEMENT DATE:	CONTRACT No.	FILE No.	Scale
C3420				AS SHOWN

SCALE: 1"=40'

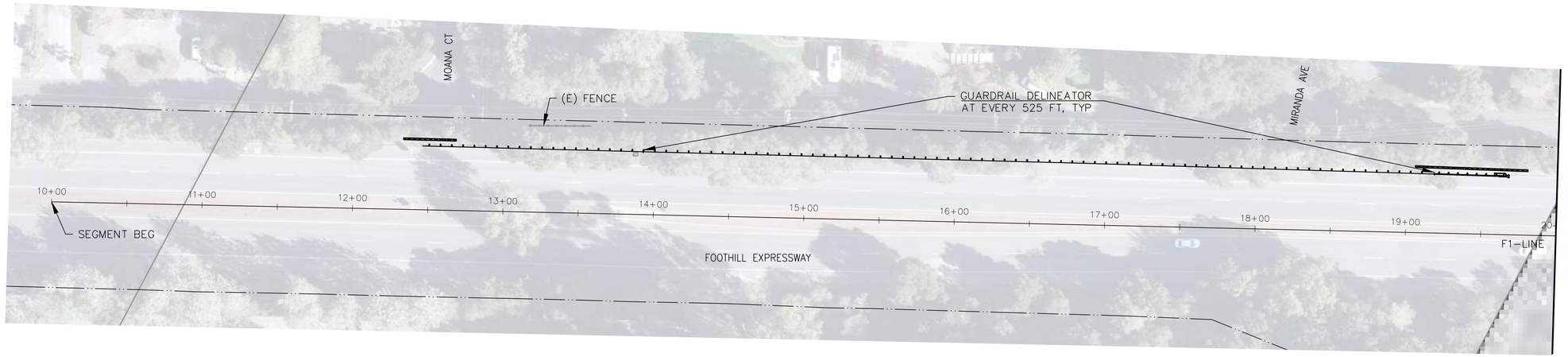

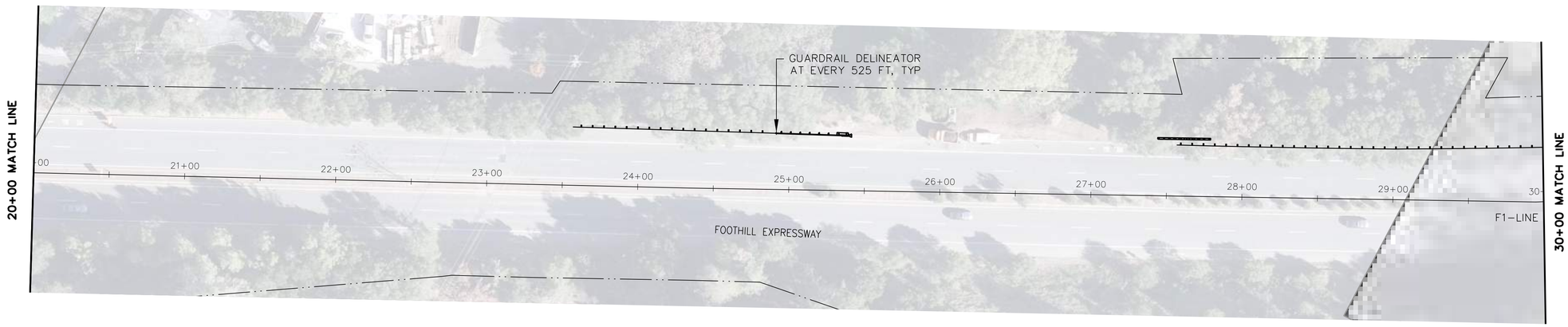

LEGENDS:

—··— COUNTY R/W

-o- DELINEATOR

NOTE:

1. SEE SSP A77N4 FOR GUARDRAIL TYPICAL RAILING DELINEATION.
2. DELINEATOR SPACING SHALL BE MEASURED FROM THE FIRST POST BEYOND THE END TERMINAL AND CONTINUED UNIFORMLY ALONG ALL SEGMENTS OF THE INSTALLATION.

ALTERNATE BID 1A

NO.	REVISIONS	DATE	PREPARED BY

COUNTY OF SANTA CLARA ROADS AND AIRPORTS DEPARTMENT

YZ (CNTY)	03-2026	DESIGNED
YZ (CNTY)	03-2026	DRAWN
PP (CNTY)	03-2026	CHECKED

SUBMITTED:
YALI ZHANG, P.E.
ASSISTANT CIVIL ENGINEER

REGISTERED PROFESSIONAL ENGINEER
YALI ZHANG
No C93475
Exp.6-30-26
CIVIL
STATE OF CALIFORNIA

APPROVED:
ROCELIA KMAK, P.E.
PRINCIPAL CIVIL ENGINEER

EXPRESSWAY GUARDRAIL REPLACEMENT AND SAFETY BARRIER IMPROVEMENTS

STRIPING/SIGNAGE PLAN - FOOTHILL/EDITH (LOC #1)

WORK ORDER No.	ADVERTISEMENT DATE:	CONTRACT No.	FILE No.
C3420			

DRAWING No. S-1

SHT No. 24 OF 34

Scale AS SHOWN

SCALE: 1"=40'

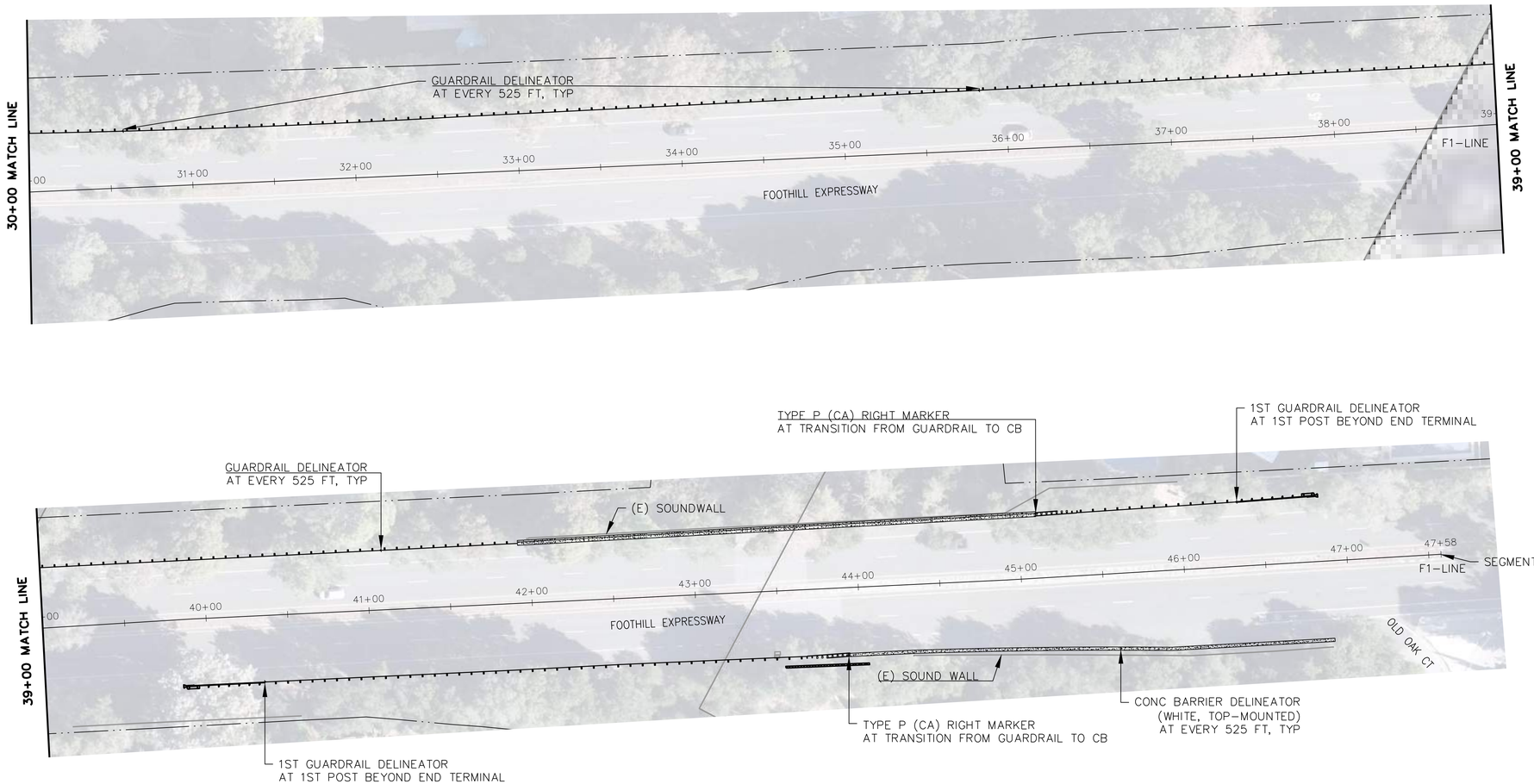

LEGENDS:

—··— COUNTY R/W

—o— DELINEATOR

NOTES:

1. SEE SSP A77N4 FOR GUARDRAIL TYPICAL RAILING DELINEATION.
2. SEE SSP A76A FOR CONCRETE BARRIER DELINEATION.
3. DELINEATOR SPACING SHALL BE MEASURED FROM THE FIRST POST BEYOND THE END TERMINAL AND CONTINUED UNIFORMLY ALONG ALL SEGMENTS OF THE INSTALLATION.

ALTERNATE BID 1A

NO.	REVISIONS	DATE	PREPARED BY

COUNTY OF SANTA CLARA ROADS AND AIRPORTS DEPARTMENT

YZ (CNTY)	03-2026
DESIGNED	DATE
YZ (CNTY)	03-2026
DRAWN	DATE
PP (CNTY)	03-2026
CHECKED	DATE

SUBMITTED:
YALI ZHANG, P.E.
ASSISTANT CIVIL ENGINEER

REGISTERED PROFESSIONAL ENGINEER — YALI ZHANG — No C93475 Exp.6-30-26 — CIVIL — STATE OF CALIFORNIA

APPROVED:
ROCELIA KMAK, P.E.
PRINCIPAL CIVIL ENGINEER

EXPRESSWAY GUARDRAIL REPLACEMENT AND SAFETY BARRIER IMPROVEMENTS

STRIPING/SIGNAGE PLAN - FOOTHILL/EDITH (LOC #1)

DRAWING No. S-2

SHT No. 25 OF 34

WORK ORDER No.	ADVERTISEMENT DATE:	CONTRACT No.	FILE No.	Scale
C3420				AS SHOWN

SCALE: 1"=20'

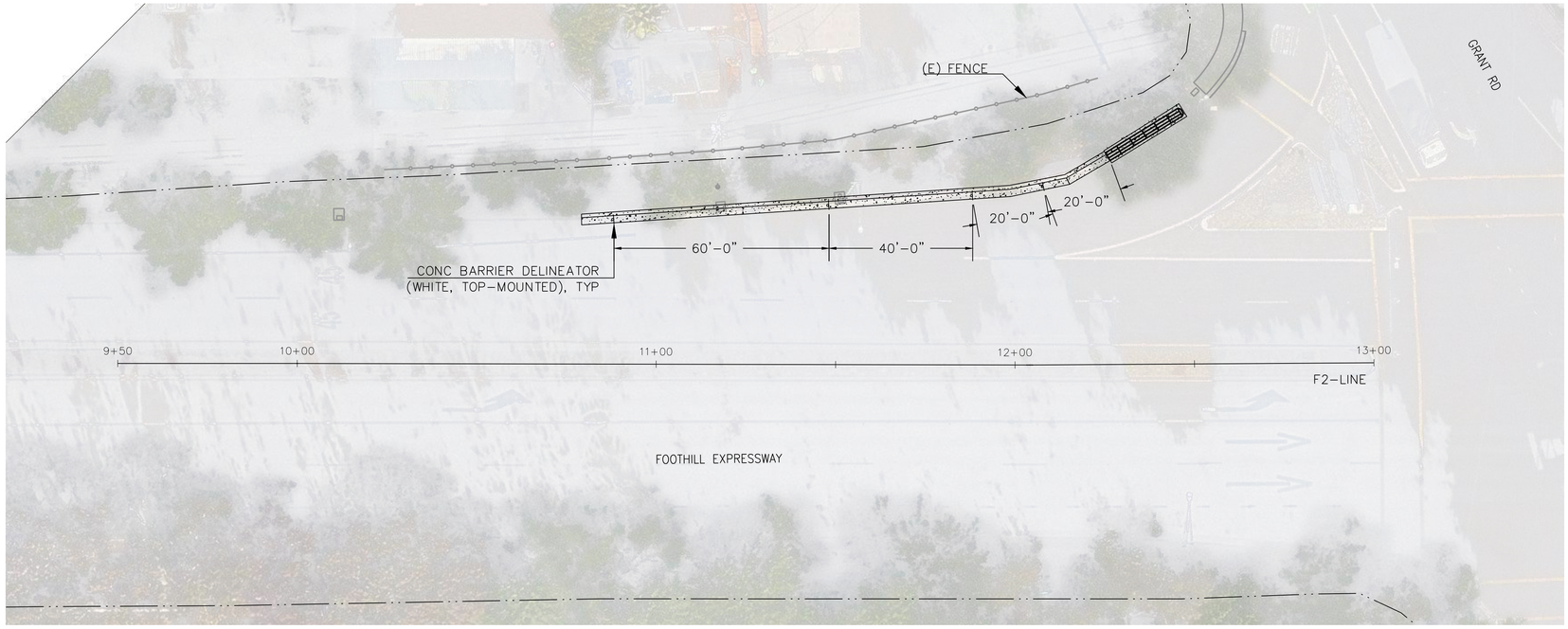

LEGENDS:

—·—·— COUNTY R/W

—o— DELINEATOR

NOTE:

1. SEE SSP A76A FOR CONCRETE BARRIER DELINEATION.

ALTERNATE BID 1A

NO.	REVISIONS	DATE	PREPARED BY

COUNTY OF SANTA CLARA ROADS AND AIRPORTS DEPARTMENT

YZ (CNTY) 03-2026 DESIGNED DATE

YZ (CNTY) 03-2026 DRAWN DATE

PP (CNTY) 03-2026 CHECKED DATE

SUBMITTED:
YALI ZHANG, P.E.
ASSISTANT CIVIL ENGINEER

REGISTERED PROFESSIONAL YALI ZHANG ENGINEER No C93475 Exp.6-30-26 CIVIL STATE OF CALIFORNIA

APPROVED:
ROCELIA KMAK, P.E.
PRINCIPAL CIVIL ENGINEER

EXPRESSWAY GUARDRAIL REPLACEMENT AND SAFETY BARRIER IMPROVEMENTS

STRIPING & SIGNAGE PLAN - FOOTHILL/GRANT (LOC #2)

DRAWING No. S-3

SHT No. 26 OF 34

WORK ORDER No.	ADVERTISEMENT DATE:	CONTRACT No.	FILE No.	Scale
C3420				AS SHOWN

SCALE: 1"=20'

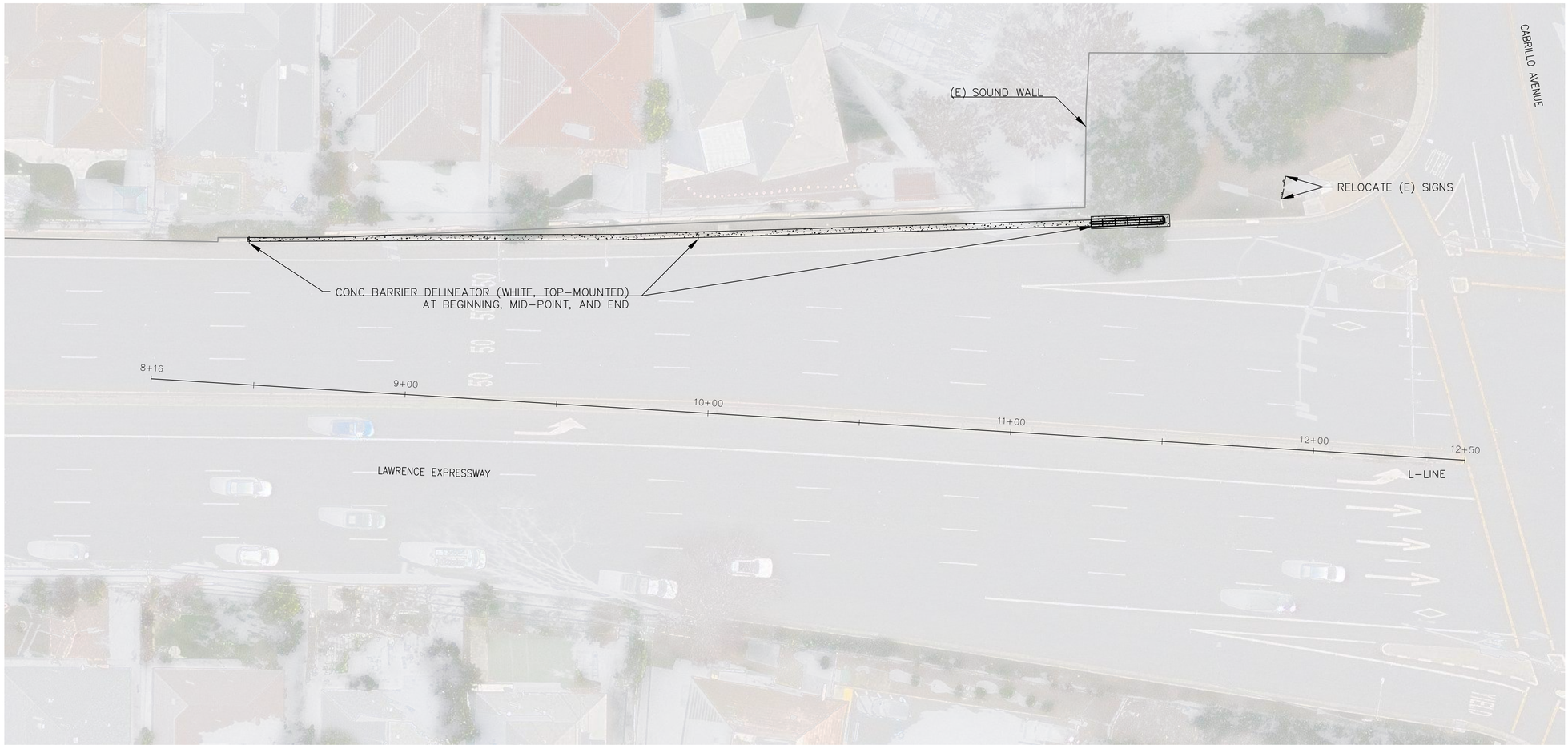

LEGENDS:

—··— COUNTY R/W

—o— DELINEATOR

NOTE:

1. SEE SSP A76A FOR CONCRETE BARRIER DELINEATION.

NO.	REVISIONS	DATE	PREPARED BY

COUNTY OF SANTA CLARA ROADS AND AIRPORTS DEPARTMENT

YZ (CNTY) 03-2026 DESIGNED DATE

YZ (CNTY) 03-2026 DRAWN DATE

PP (CNTY) 03-2026 CHECKED DATE

SUBMITTED: YALI ZHANG, P.E. ASSISTANT CIVIL ENGINEER

REGISTERED PROFESSIONAL ENGINEER YALI ZHENG No C93475 Exp.6-30-26 CIVIL STATE OF CALIFORNIA

APPROVED: ROCELIA KMAK, P.E. PRINCIPAL CIVIL ENGINEER

EXPRESSWAY GUARDRAIL REPLACEMENT AND SAFETY BARRIER IMPROVEMENTS

STRIPING & SIGNAGE PLAN - LAWRENCE EXPY (LOC#3)

DRAWING No. S-4

SHT No. 27 OF 34

WORK ORDER No.	ADVERTISEMENT DATE:	CONTRACT No.	FILE No.	Scale
C3420				AS SHOWN



SCALE: 1"=40'

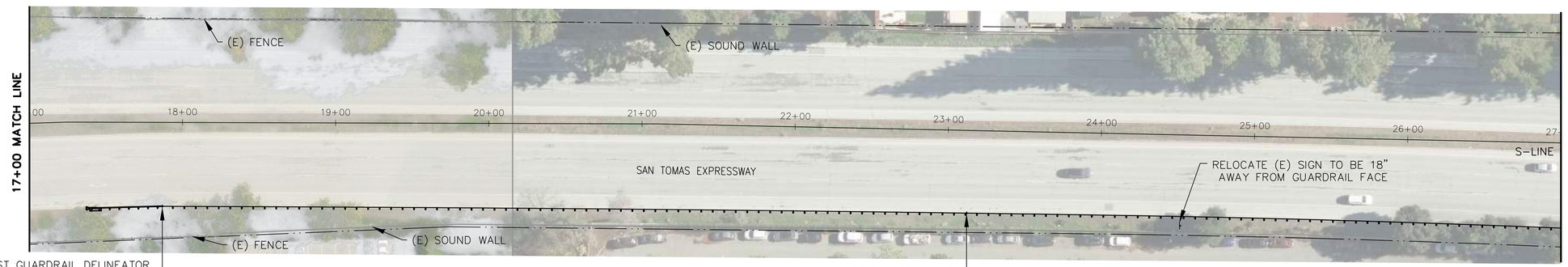

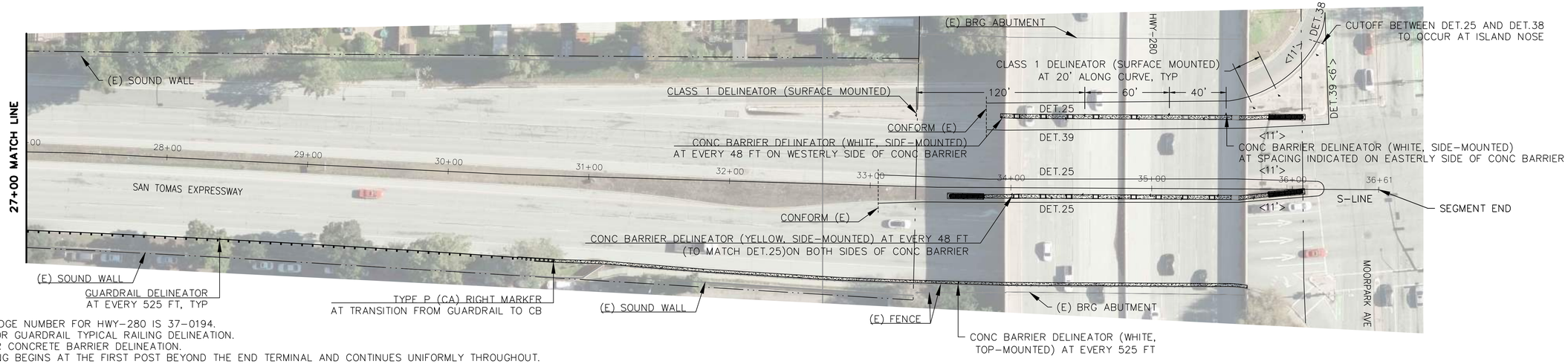

LEGENDS:

—··— COUNTY R/W

—o— DELINEATOR

NOTE:

1. THE CALTRANS BRIDGE NUMBER FOR HWY-280 IS 37-0194.
2. SEE SSP A77N4 FOR GUARDRAIL TYPICAL RAILING DELINEATION.
3. SEE SSP A76A FOR CONCRETE BARRIER DELINEATION.
4. DELINEATOR SPACING BEGINS AT THE FIRST POST BEYOND THE END TERMINAL AND CONTINUES UNIFORMLY THROUGHOUT.

NO.	REVISIONS	DATE	PREPARED BY

COUNTY OF SANTA CLARA ROADS AND AIRPORTS DEPARTMENT

YZ (CNTY)	03-2026	DATE
DESIGNED YZ (CNTY)	03-2026	DATE
DRAWN PP (CNTY)	03-2026	DATE
CHECKED		DATE

SUBMITTED: YALI ZHANG, P.E. ASSISTANT CIVIL ENGINEER

REGISTERED PROFESSIONAL ENGINEER YALI ZHANG No C93475 Exp.6-30-26 CIVIL STATE OF CALIFORNIA

APPROVED: ROCELIA KMAK, P.E. PRINCIPAL CIVIL ENGINEER

EXPRESSWAY GUARDRAIL REPLACEMENT AND SAFETY BARRIER IMPROVEMENTS

STRIPING & SIGNAGE PLAN - SAN TOMAS EXPY (LOC #4)

WORK ORDER No.	ADVERTISEMENT DATE:	CONTRACT No.	FILE No.
C3420			

DRAWING No. S-5

SHT No. 28 OF 34

Scale AS SHOWN

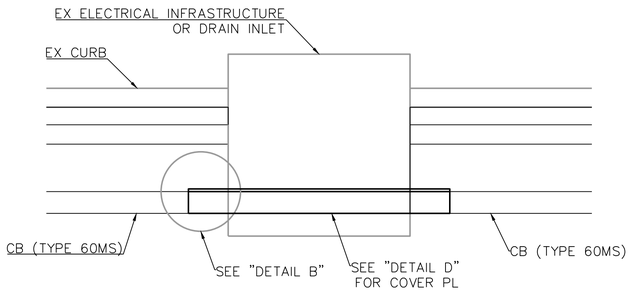

PLAN

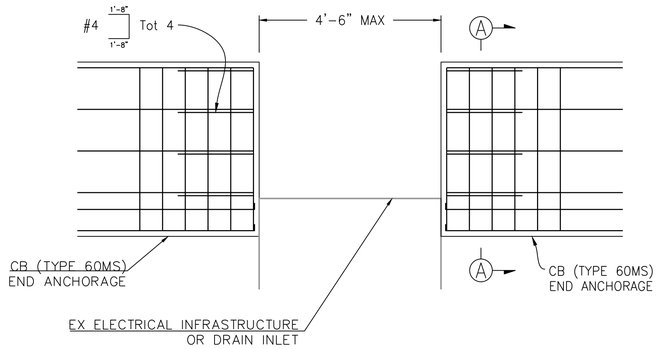

ELEVATION

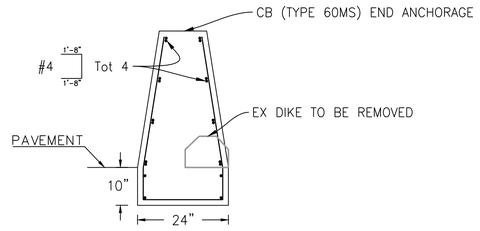

NOTE:
SEE SSP A76G FOR DIMENSIONS NOT SHOWN.

SECTION A-A

DETAIL B

DETAIL C

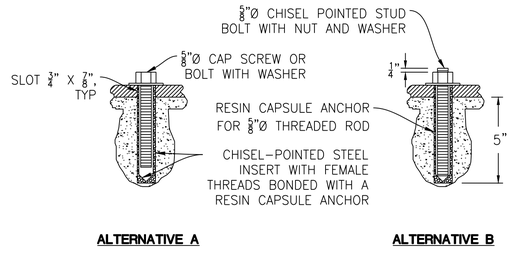

ALTERNATIVE A **ALTERNATIVE B**

DETAIL D - ALTERNATIVE ANCHORAGE

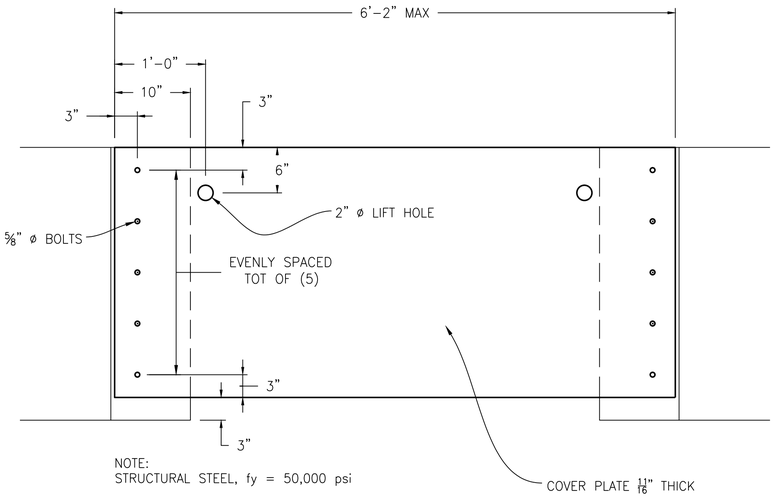

NOTE:
STRUCTURAL STEEL, fy = 50,000 psi

DETAIL E

CONCRETE BARRIER (TYPE 60MS) AT EXISTING ELECTRICAL INFRASTRUCTURE OR DRAINAGE INLET (NTS)

NO.	REVISIONS	DATE	PREPARED BY

COUNTY OF SANTA CLARA ROADS AND AIRPORTS DEPARTMENT

YZ (CNTY)	03-2026	DESIGNED DATE
YZ (CNTY)	03-2026	DRAWN DATE
PP (CNTY)	03-2026	CHECKED DATE

SUBMITTED:
YALI ZHANG, P.E.
ASSISTANT CIVIL ENGINEER

REGISTERED PROFESSIONAL ENGINEER
YALI ZHANG
No C93475
Exp.6-30-26
CIVIL
STATE OF CALIFORNIA

APPROVED:
ROCELIA KMAK, P.E.
PRINCIPAL CIVIL ENGINEER

EXPRESSWAY GUARDRAIL REPLACEMENT AND SAFETY BARRIER IMPROVEMENTS

GUARDRAIL DETAILS

DRAWING No. D-1
SHT No. 29 OF 34

WORK ORDER No.	ADVERTISEMENT DATE:	CONTRACT No.	FILE No.	Scale
C3420				AS SHOWN

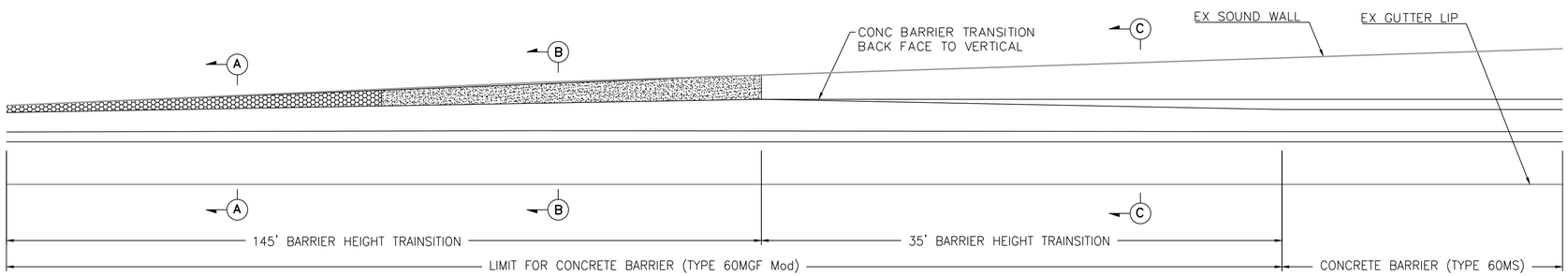

PLAN

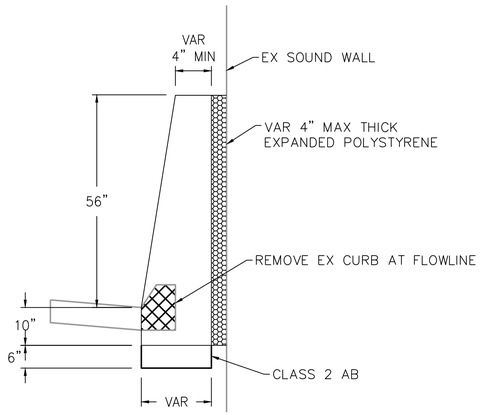

SECTION A-A

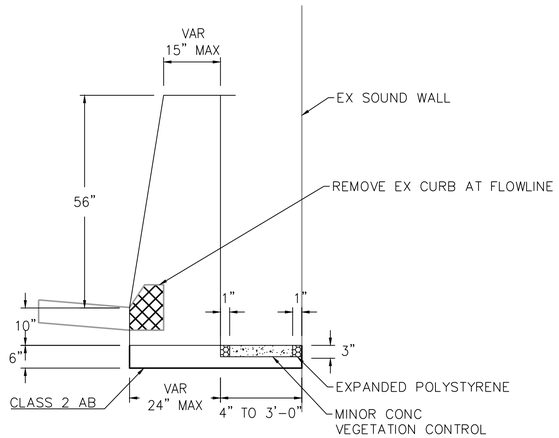

SECTION B-B

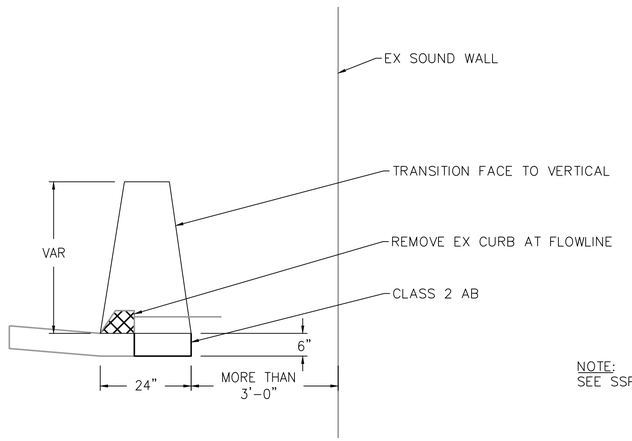

SECTION C-C

NOTE:
SEE SSP A76F FOR DETAILS NOT SHOWN.

CONCRETE BARRIER (TYPE 60MGF MOD) ALIGNMENT AT EXISTING SOUND WALL
(NTS)

NO.	REVISIONS	DATE	PREPARED BY

COUNTY OF SANTA CLARA ROADS AND AIRPORTS DEPARTMENT

YZ (CNTY)	03-2026	DESIGNED DATE
YZ (CNTY)	03-2026	DRAWN DATE
PP (CNTY)	03-2026	CHECKED DATE

SUBMITTED:
YALI ZHANG, P.E.
ASSISTANT CIVIL ENGINEER

REGISTERED PROFESSIONAL ENGINEER
YALI ZHANG
No C93475
Exp.6-30-26
CIVIL
STATE OF CALIFORNIA

APPROVED:
ROCELIA KMAK, P.E.
PRINCIPAL CIVIL ENGINEER

EXPRESSWAY GUARDRAIL REPLACEMENT AND SAFETY BARRIER IMPROVEMENTS

GUARDRAIL DETAILS

WORK ORDER No.	ADVERTISEMENT DATE:	CONTRACT No.	FILE No.
C3420			

DRAWING No. D-2

SHT No. 30 OF 34

Scale AS SHOWN

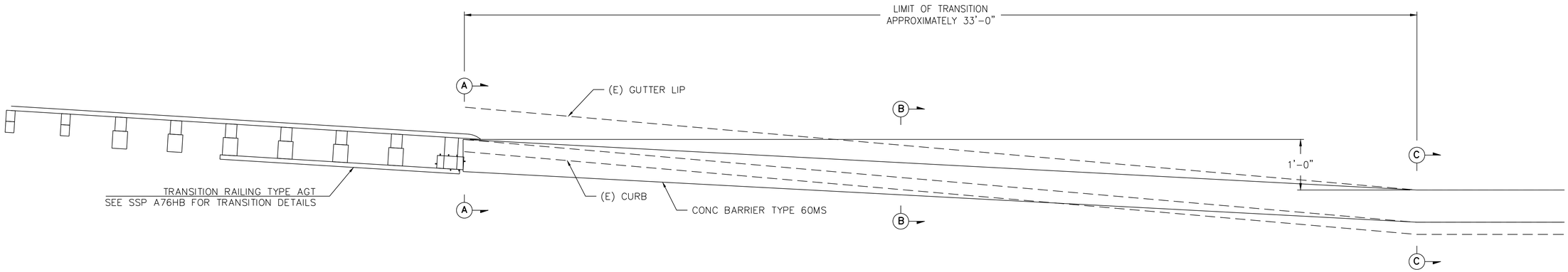

PLAN

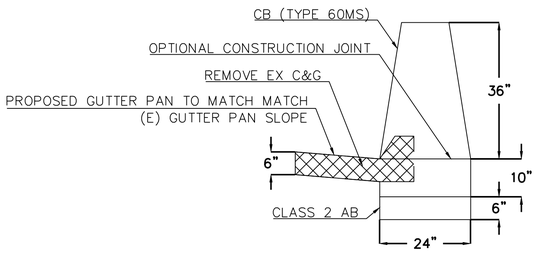

SECTION A-A

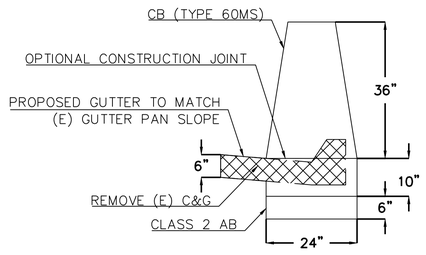

SECTION B-B

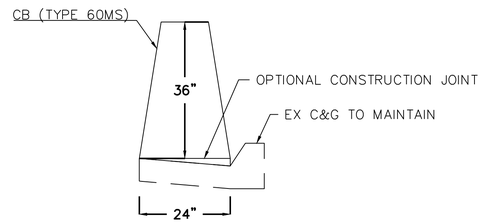

SECTION C-C

CONCRETE BARRIER (TYPE 60MS) TRANSITION ALIGNMENT FROM BEING AT FLOWLINE TO BEING AT GUTTER LIP
(NTS)

NO.	REVISIONS	DATE	PREPARED BY

COUNTY OF SANTA CLARA ROADS AND AIRPORTS DEPARTMENT

YZ (CNTY) DESIGNED	03-2026 DATE	SUBMITTED: YALI ZHANG, P.E. ASSISTANT CIVIL ENGINEER
YZ (CNTY) DRAWN	03-2026 DATE	REGISTERED PROFESSIONAL ENGINEER YALI ZHANG No C93475 Exp.6-30-26 CIVIL STATE OF CALIFORNIA
PP (CNTY) CHECKED	03-2026 DATE	APPROVED: ROCELIA KMAK, P.E. PRINCIPAL CIVIL ENGINEER

EXPRESSWAY GUARDRAIL REPLACEMENT AND SAFETY BARRIER IMPROVEMENTS

GUARDRAIL DETAILS

WORK ORDER No.	ADVERTISEMENT DATE:	CONTRACT No.	FILE No.
C3420			

DRAWING No. D-3

SHT No. 31 OF 34

Scale AS SHOWN

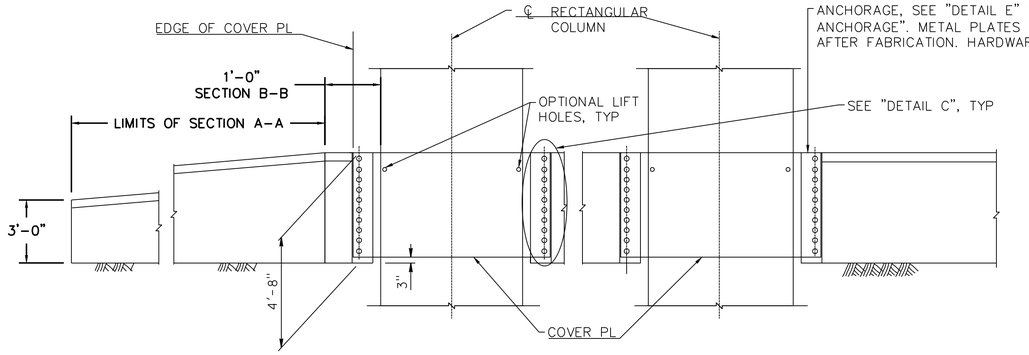

ELEVATION

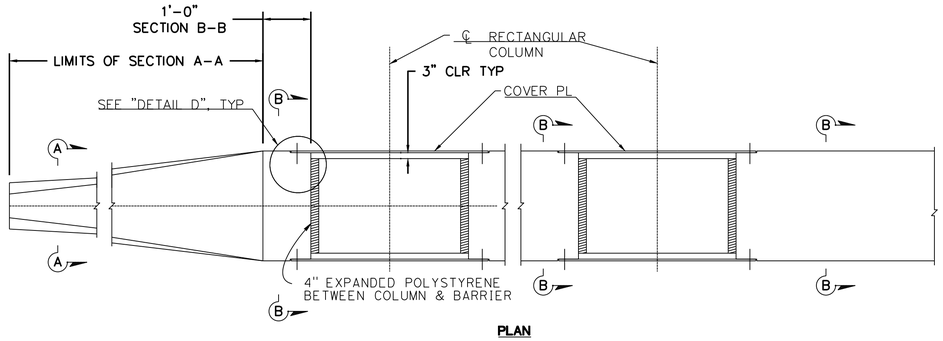

PLAN

NOTES:
1. SEE CALTRANS BRIDGE STANDARD DETAILS SHEETS XS16-090-1 AND XS16-090-2 FOR REFERENCE TO CONCRETE BARRIER TYPE 60R-TRANSITION DETAILS AT BRIDGE COLUMNS.
2. ADJUST HEIGHT OF CONCRETE BARRIERS WALL ON LOW SIDE OF OFFSET OR SUPERELEVATED ROADWAYS TO PROVIDE LEVEL GRADE ACROSS TOP OF CONCRETE BARRIER CAP.
3. STRUCTURAL STEEL SHALL BE ASTM A709/A709M GRADE 50 UNLESS OTHERWISE NOTED.

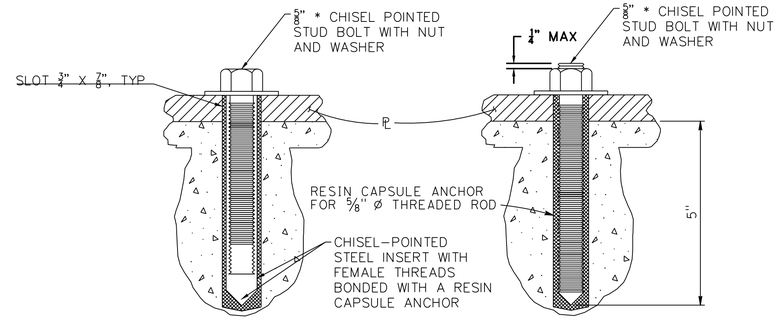

ALTERNATIVE ANCHORAGE

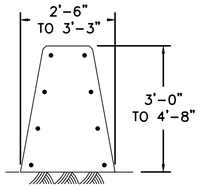

SECTION A-A
WIDTH & HEIGHT TRANSITION

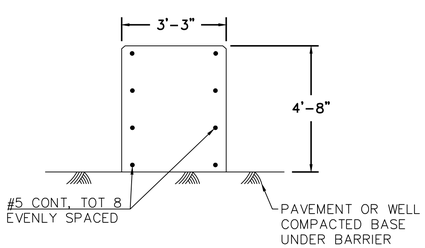

SECTION B-B

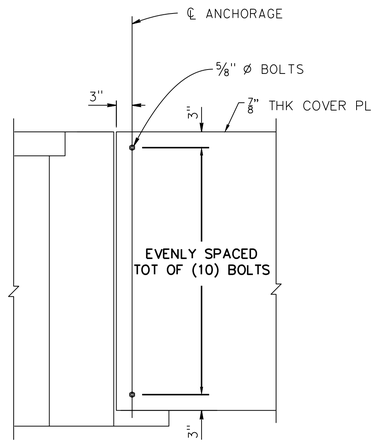

DETAIL C

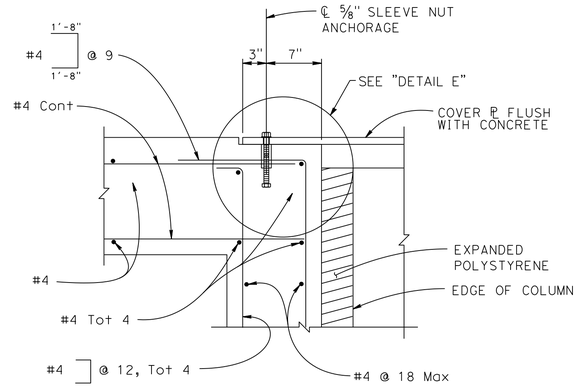

DETAIL D

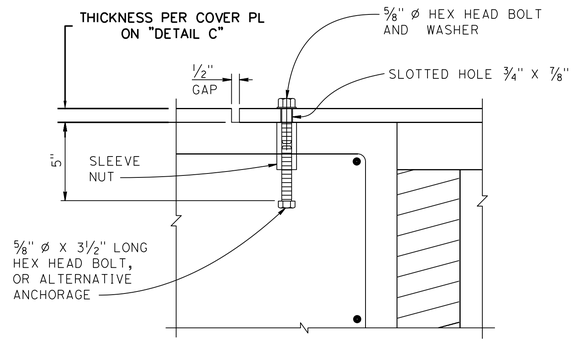

DETAIL E

CONCRETE BARRIER (TYPE 60R MOD.) AT EXISTING BRIDGE COLUMN
(NTS)

NO.	REVISIONS	DATE	PREPARED BY

COUNTY OF SANTA CLARA ROADS AND AIRPORTS DEPARTMENT

YZ (CNTY)	03-2026	DESIGNED / DATE
YZ (CNTY)	03-2026	DRAWN / DATE
PP (CNTY)	03-2026	CHECKED / DATE

SUBMITTED: YALI ZHANG, P.E. ASSISTANT CIVIL ENGINEER

REGISTERED PROFESSIONAL ENGINEER — YALI ZHENG — No C93475 Exp.6-30-26 — CIVIL — STATE OF CALIFORNIA

APPROVED: ROCELIA KMAK, P.E. PRINCIPAL CIVIL ENGINEER

EXPRESSWAY GUARDRAIL REPLACEMENT AND SAFETY BARRIER IMPROVEMENTS

GUARDRAIL DETAILS

DRAWING No. D-4

SHT No. 32 OF 34

WORK ORDER No.	ADVERTISEMENT DATE:	CONTRACT No.	FILE No.	Scale
C3420				AS SHOWN

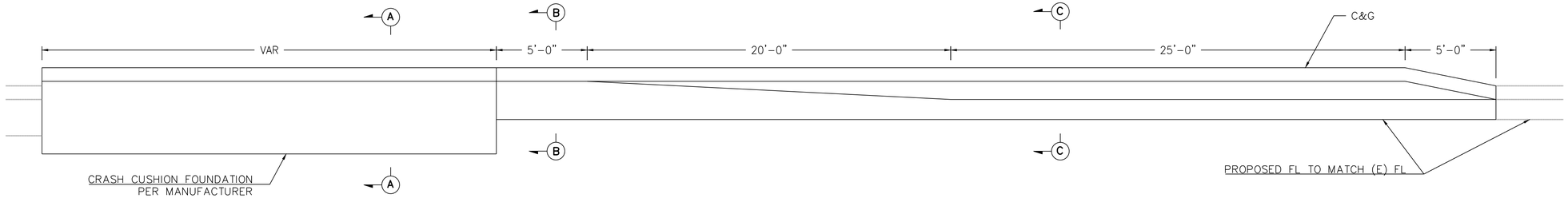

PLAN

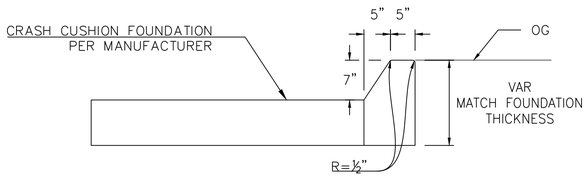

SECTION A-A

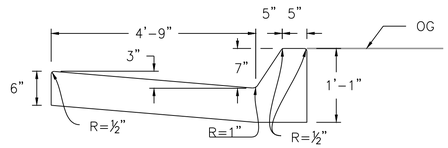

SECTION B-B

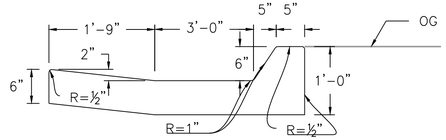

SECTION C-C

CURB & GUTTER IN ADVANCE OF CRASH CUSHION ON LAWRENCE EXPY/CABRILLO AVE (LOCATION #3)
(NTS)

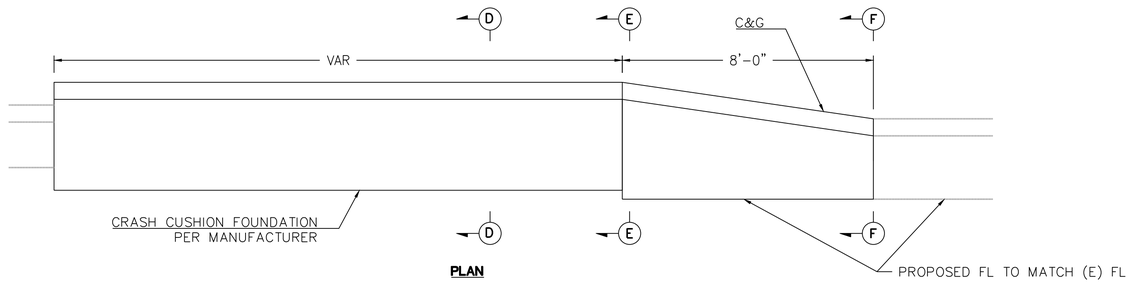

PLAN

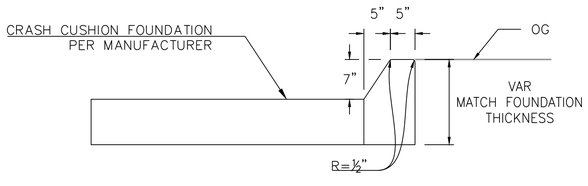

SECTION A-A

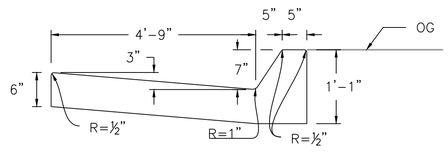

SECTION B-B

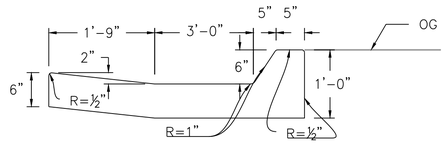

SECTION C-C

CURB & GUTTER IN ADVANCE OF CRASH CUSHION ON FOOTHILL EXPY/GRANT RD (LOCATION #2)
(NTS)

NO.	REVISIONS	DATE	PREPARED BY

COUNTY OF SANTA CLARA ROADS AND AIRPORTS DEPARTMENT

YZ (CNTY)	03-2026	DESIGNED / DATE
YZ (CNTY)	03-2026	DRAWN / DATE
PP (CNTY)	03-2026	CHECKED / DATE

SUBMITTED:
YALI ZHANG, P.E.
ASSISTANT CIVIL ENGINEER

REGISTERED PROFESSIONAL ENGINEER — YALI ZHENG — No C93475 Exp.6-30-26 — CIVIL — STATE OF CALIFORNIA

APPROVED:
ROCELIA KMAK, P.E.
PRINCIPAL CIVIL ENGINEER

EXPRESSWAY GUARDRAIL REPLACEMENT AND SAFETY BARRIER IMPROVEMENTS

GUARDRAIL DETAILS

WORK ORDER No.	ADVERTISEMENT DATE:	CONTRACT No.	FILE No.
C3420			

DRAWING No. D-5

SHT No. 33 OF 34

Scale AS SHOWN

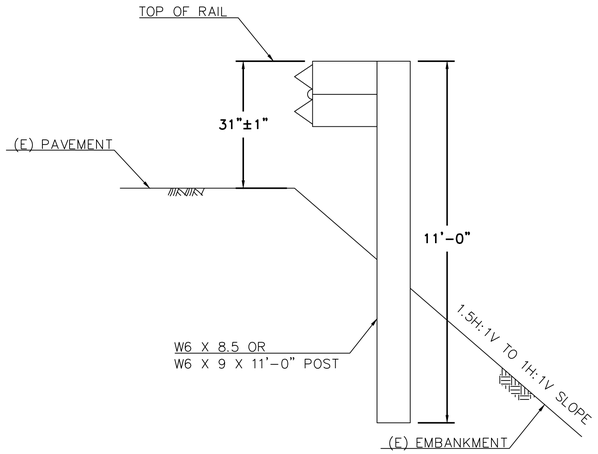

DETAIL A - GUARDRAIL WITH 11FT LONG POST

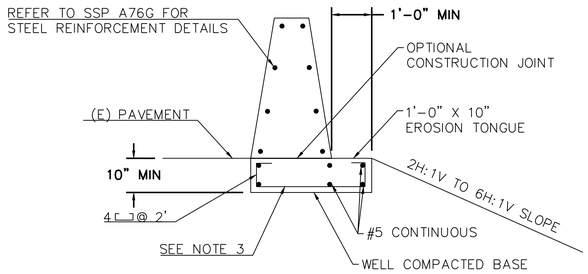

NOTES:
1. 10" FOOTING SHALL BE MONOLITHIC WITH THE CONCRETE GUARDRAIL OR THE FOOTING SHALL BE CONSTRUCTED MONOLITHIC WITH THE 12" EROSION TONGUE AND THE CONCRETE GUARDRAIL SET ATOP OF FOOTING AND CONNECTED WITH REINFORCING STIRRUPS.
2. CONSTRUCT 10" FOOTING ENTIRE LENGTH OF CONCRETE GUARDRAIL.
3. STEEL REINFORCING STRAP MAY BE OMITTED IF POURED MONOLITHICALLY.

DETAIL B - EROSION TONGUE CROSS SECTION

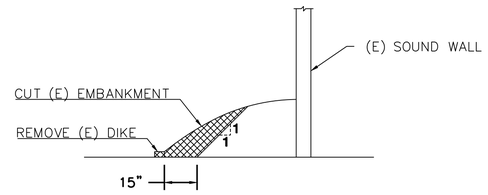

DETAIL C - EMBANKMENT CUT

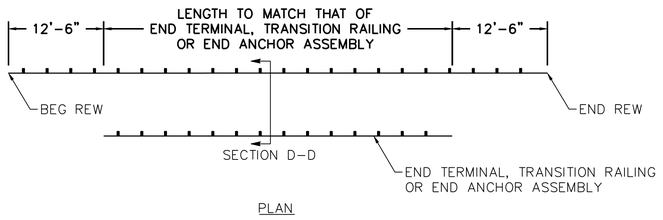

PLAN

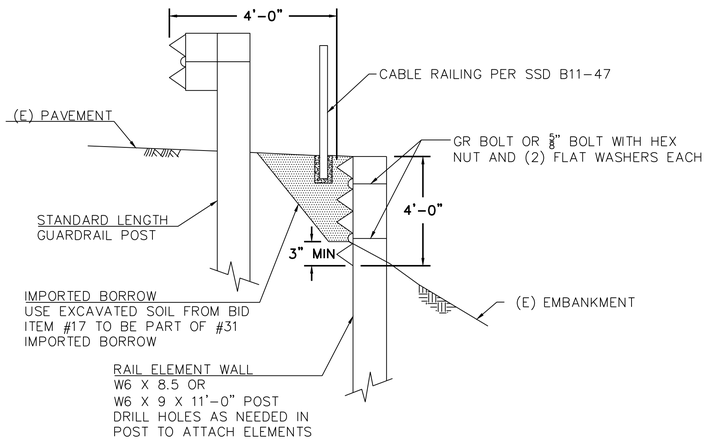

SECTION D-D

DETAIL D - RAIL ELEMENT WALL

NO.	REVISIONS	DATE	PREPARED BY

COUNTY OF SANTA CLARA ROADS AND AIRPORTS DEPARTMENT

YZ (CNTY) 03-2026 DESIGNED DATE
YZ (CNTY) 03-2026 DRAWN DATE
PP (CNTY) 03-2026 CHECKED DATE

SUBMITTED:
YALI ZHANG, P.E.
ASSISTANT CIVIL ENGINEER

REGISTERED PROFESSIONAL ENGINEER YALI ZHANG No C93475 Exp.6-30-26 CIVIL STATE OF CALIFORNIA

APPROVED:
ROCELIA KMAK, P.E.
PRINCIPAL CIVIL ENGINEER

EXPRESSWAY GUARDRAIL REPLACEMENT AND SAFETY BARRIER IMPROVEMENTS

GUARDRAIL DETAILS

DRAWING No. D-6
SHT No. 34 OF 34

WORK ORDER No.	ADVERTISEMENT DATE:	CONTRACT No.	FILE No.	Scale
C3420				AS SHOWN