APPENDIX H

NOISE AND VIBRATION IMPACT ANALYSIS

CARLSBAD
CLOVIS
IRVINE
LOS ANGELES
PALM SPRINGS
POINT RICHMOND
RIVERSIDE
ROSEVILLE
SAN LUIS OBISPO

MEMORANDUM

DATE: September 13, 2024

TO: Jared Jerome, Associate Planner

FROM: Jason Lui, Associate/Senior Noise Specialist

SUBJECT: Noise and Vibration Impact Analysis for the Sun Mesa (Billings) Mini Storage Project, Yucca Valley, San Bernardino County, California

INTRODUCTION

This noise and vibration impact analysis has been prepared to evaluate the potential noise and vibration impacts and reduction measures associated with the Sun Mesa (Billings) Mini Storage Project (project) in Yucca Valley, San Bernardino County, California. This memorandum is intended to satisfy the Town of Yucca Valley's (Town) requirements and the California Environmental Quality Act for a project-specific noise and vibration impact analysis by examining the impacts from the proposed uses on the project site and evaluating mitigation measures that the project requires. All references cited in this memorandum are included in Attachment A.

PROJECT LOCATION

The proposed Sun Mesa (Billings) Mini Storage development project site is located on Assessor's Parcel Number 0597-111-67-0000, which is east of State Route 247 (SR-247) and north of Buena Vista Drive in the Town of Yucca Valley in San Bernardino County, California. The 4.34-acre project site is currently undeveloped. Access to the project site is provided by Buena Vista Drive, Sun Mesa Drive, and Newton Lane. Figure 1 (all figures provided in Attachment B) shows the project location.

PROJECT DESCRIPTION

The proposed project would involve the development of a 20-building, 94,500 total square foot (sf) mini storage facility. The site would be bounded by a maximum 10 foot (ft) high security fence and would consist of 17 storage buildings each 4,800 sf in size evenly distributed around the site. Along the eastern property line, two linear storage buildings (one 5,000 sf in floor area and the other 7,500 sf in floor area) would run the length of the project site. Two entrances would be located on the west side of the site and would be gated. A 400 sf manager's unit would be located at the northern entry gate. Additionally, outdoor parking stalls would be located on the north and east sides of the proposed manager's unit building. These parking areas would accommodate approximately 10 vehicles. A 9,600 sf retention basin would be located on the southwest corner of the project site. The proposed project would include associated site improvements including new internal roadways and utility improvements. Access to the proposed project site would be between the hours of 6:00 a.m. and 10:00 p.m. 7 days per week.

The maximum depth of excavation for construction would be approximately 7 ft below the ground surface. Connections to utilities may require additional excavation up to 15 ft below the ground surface at limited locations on site. Construction is anticipated to begin in the fall of 2024 and is anticipated to be completed within 12 months. Figure 2 shows the site plan.

CHARACTERISTICS OF SOUND

Noise is usually defined as unwanted sound. Noise consists of any sound that may produce physiological or psychological damage and/or interfere with communication, work, rest, recreation, and sleep.

To the human ear, sound has two significant characteristics: pitch and loudness. Pitch is generally an annoyance, while loudness can affect the ability to hear. Pitch is the number of complete vibrations, or cycles per second, of a wave resulting in the tone's range from high to low. Loudness is the strength of a sound that describes a noisy or quiet environment and is measured by the amplitude of the sound wave. Loudness is determined by the intensity of the sound waves combined with the reception characteristics of the human ear. Sound intensity refers to how hard the sound wave strikes an object, which in turn produces the sound's effect. This characteristic of sound can be precisely measured with instruments. The analysis of a project defines the noise environment of the project area in terms of sound intensity and its effect on adjacent sensitive land uses.

Measurement of Sound

Sound intensity is measured through the A-weighted scale to correct for the relative frequency response of the human ear. That is, an A-weighted noise level de-emphasizes low and very high frequencies of sound similar to the human ear's de-emphasis of these frequencies. Decibels (dB), unlike the linear scale (e.g., inches or pounds), are measured on a logarithmic scale, which is a scale based on powers of 10.

For example, 10 dB is 10 times more intense than 0 dB, 20 dB is 100 times more intense than 0 dB, and 30 dB is 1,000 times more intense than 0 dB. Thirty decibels (30 dB) represents 1,000 times as much acoustic energy as 0 dB. The decibel scale increases as the square of the change, representing the sound pressure energy. A sound as soft as human breathing is about 10 times greater than 0 dB. The decibel system of measuring sound gives a rough connection between the physical intensity of sound and its perceived loudness to the human ear. A 10 dB increase in sound level is perceived by the human ear as only a doubling of the loudness of the sound. Ambient sounds generally range from 30 dB (very quiet) to 100 dB (very loud).

Sound levels are generated from a source, and their decibel level decreases as the distance from that source increases. Sound dissipates exponentially with distance from the noise source. For a single point source, sound levels decrease approximately 6 dB for each doubling of distance from the source. This drop-off rate is appropriate for noise generated by stationary equipment. If noise is produced by a line source (e.g., highway traffic or railroad operations), the sound decreases 3 dB for each doubling of distance in a hard site environment; however, line source noise in a relatively flat environment with absorptive vegetation decreases 4.5 dB for each doubling of distance.

There are many ways to rate noise for various time periods, but an appropriate rating of ambient noise affecting humans also accounts for the annoying effects of sound. The equivalent continuous sound

level (L_{eq}) is the total sound energy of time-varying noise over a sample period. However, the predominant rating scales for human communities in the State of California are the L_{eq} and community noise equivalent level (CNEL) or the day-night average noise level (L_{dn}) based on A-weighted decibels (dBA). CNEL is the time-varying noise over a 24-hour period, with a 5 dBA weighting factor applied to the hourly L_{eq} for noises occurring from 7:00 p.m. to 10:00 p.m. (defined as relaxation hours), and a 10 dBA weighting factor applied to noises occurring from 10:00 p.m. to 7:00 a.m. (defined as sleeping hours). L_{dn} is similar to the CNEL scale but without the adjustment for events occurring during the evening hours. CNEL and L_{dn} are within 1 dBA of each other and are normally interchangeable. The Town uses the CNEL noise scale for long-term noise impact assessment.

Other noise rating scales of importance when assessing the annoyance factor include the maximum noise level (L_{max}), which is the highest exponential time-averaged sound level that occurs during a stated time period. The noise environments discussed in this analysis for short-term noise impacts are specified in terms of maximum levels denoted by L_{max}, which reflects peak operating conditions and addresses the annoying aspects of intermittent noise. L_{max} is often used together with another noise scale, or noise standards in terms of percentile noise levels, in noise ordinances for enforcement purposes. For example, the L_{10} noise level represents the noise level exceeded 10 percent of the time during a stated period. The L_{50} noise level represents the median noise level. Half the time the noise level exceeds this level, and half the time it is less than this level. The L_{90} noise level represents the noise level exceeded 90 percent of the time and is considered the background noise level during a monitoring period. For a relatively constant noise source, the L_{eq} and L_{50} are approximately the same.

Noise impacts can be described in three categories. The first category includes audible impacts that refer to increases in noise levels noticeable to humans. Audible increases in noise levels generally refer to a change of 3 dB or greater because this level has been found to be barely perceptible in exterior environments. The second category, potentially audible, refers to a change in the noise level between 1 dB and 3 dB. This range of noise levels has been found to be noticeable only in laboratory environments. The last category includes changes in noise levels of less than 1 dB, which are inaudible to the human ear. Only audible changes in existing ambient or background noise levels are considered potentially significant.

Physiological Effects of Noise

Physical damage to human hearing begins at prolonged exposure to noise levels higher than 85 dBA. Exposure to high noise levels affects the entire system, with prolonged noise exposure in excess of 75 dBA increasing body tensions, thereby affecting blood pressure and functions of the heart and the nervous system. In comparison, extended periods of noise exposure above 90 dBA would result in permanent cell damage. When the noise level reaches 120 dBA, a tickling sensation occurs in the human ear, even with short-term exposure. This level of noise is called the threshold of feeling. As the sound reaches 140 dBA, the tickling sensation is replaced by the feeling of pain in the ear (the threshold of pain). A sound level of 160–165 dBA will result in dizziness or loss of equilibrium. The ambient or background noise problem is widespread and generally more concentrated in urban areas than in outlying, less developed areas. Table A lists definitions of acoustical terms, and Table B shows common sound levels and their sources.

Table A: Definitions of Acoustical Terms

Term	Definitions
Decibel, dB	A unit of measurement that denotes the ratio between two quantities that are proportional to power; the number of decibels is 10 times the logarithm (to the base 10) of this ratio.
Frequency, Hz	Of a function periodic in time, the number of times that the quantity repeats itself in 1 second (i.e., number of cycles per second).
A-Weighted Sound Level, dBA	The sound level obtained by use of A-weighting. The A-weighting filter deemphasizes the very low- and very high-frequency components of the sound in a manner similar to the frequency response of the human ear and correlates well with subjective reactions to noise. (All sound levels in this report are A-weighted, unless reported otherwise.)
L_{01}, L_{10}, L_{50}, L_{90}	The fast A-weighted noise levels that are equaled or exceeded by a fluctuating sound level 1%, 10%, 50%, and 90% of a stated time period.
Equivalent Continuous Noise Level, L_{eq}	The level of a steady sound that, in a stated time period and at a stated location, has the same A-weighted sound energy as the time-varying sound.
Community Noise Equivalent Level, CNEL	The 24-hour A-weighted average sound level from midnight to midnight, obtained after the addition of 5 dBA to sound levels occurring in the evening from 7:00 PM to 10:00 PM and after the addition of 10 dBA to sound levels occurring in the night between 10:00 PM and 7:00 AM.
Day/Night Noise Level, L_{dn}	The 24-hour A-weighted average sound level from midnight to midnight, obtained after the addition of 10 dBA to sound levels occurring in the night between 10:00 PM and 7:00 AM.
L_{max}, L_{min}	The maximum and minimum A-weighted sound levels measured on a sound level meter, during a designated time interval, using fast time averaging.
Ambient Noise Level	The all-encompassing noise associated with a given environment at a specified time; usually a composite of sound from many sources at many directions, near and far; no particular sound is dominant.
Intrusive	The noise that intrudes over and above the existing ambient noise at a given location. The relative intrusiveness of a sound depends upon its amplitude, duration, frequency, and time of occurrence and tonal or informational content, as well as the prevailing ambient noise level.

Source: *Handbook of Acoustical Measurements and Noise Control* (Harris 1991).

Table B: Common Sound Levels and Their Noise Sources

Noise Source	A-Weighted Sound Level in Decibels	Noise Environments	Subjective Evaluations
Near Jet Engine	140	Deafening	128 times as loud
Civil Defense Siren	130	Threshold of Pain	64 times as loud
Hard Rock Band	120	Threshold of Feeling	32 times as loud
Accelerating Motorcycle at a Few Feet Away	110	Very Loud	16 times as loud
Pile Driver; Noisy Urban Street/Heavy City Traffic	100	Very Loud	8 times as loud
Ambulance Siren; Food Blender	95	Very Loud	—
Garbage Disposal	90	Very Loud	4 times as loud
Freight Cars; Living Room Music	85	Loud	—
Pneumatic Drill; Vacuum Cleaner	80	Loud	2 times as loud
Busy Restaurant	75	Moderately Loud	—
Near Freeway Auto Traffic	70	Moderately Loud	—
Average Office	60	Quiet	One-half as loud
Suburban Street	55	Quiet	—
Light Traffic; Soft Radio Music in Apartment	50	Quiet	One-quarter as loud
Large Transformer	45	Quiet	—
Average Residence without Stereo Playing	40	Faint	One-eighth as loud
Soft Whisper	30	Faint	—
Rustling Leaves	20	Very Faint	—
Human Breathing	10	Very Faint	Threshold of Hearing
—	0	Very Faint	—

Source: Compiled by LSA (2015).

FUNDAMENTALS OF VIBRATION

Vibration refers to ground-borne noise and perceptible motion. Ground-borne vibration is almost exclusively a concern inside buildings and is rarely perceived as a problem outdoors, where the motion may be discernible, but without the effects associated with the shaking of a building there is less adverse reaction. Vibration energy propagates from a source through intervening soil and rock layers to the foundations of nearby buildings. The vibration then propagates from the foundation throughout the remainder of the structure. Building vibration may be perceived by occupants as the motion of building surfaces, the rattling of items on shelves or hanging on walls, or a low-frequency rumbling noise. The rumbling noise is caused by the vibration of walls, floors, and ceilings that radiate sound waves. Annoyance from vibration often occurs when the vibration exceeds the threshold of perception by 10 vibration velocity decibels (VdB) or less. This is an order of magnitude below the damage threshold for normal buildings. Typical sources of ground-borne vibration are construction activities (e.g., blasting, pile driving, and operating heavy-duty earthmoving equipment), steel-wheeled trains, and occasional traffic on rough roads. Ground-borne vibration and noise from these sources are usually localized to areas within approximately 100 ft from the vibration source, although there are examples of ground-borne vibration causing interference out to distances greater than 200 ft (see the Federal Transit Administration's [FTA] 2018 *Transit Noise and Vibration Impact Assessment Manual*). When roadways are smooth, vibration from traffic, even heavy trucks, is rarely perceptible. It is assumed for most projects that the roadway surface will be smooth enough that ground-borne vibration from street traffic will not exceed the impact criteria; however, both construction of a project and freight train operations on railroad tracks could result in ground-borne vibration that may be perceptible and annoying.

Ground-borne noise is not likely to be a problem because noise arriving via the normal airborne path will usually be greater than ground-borne noise. Ground-borne vibration has the potential to disturb people and damage buildings. Although it is very rare for train-induced ground-borne vibration to cause cosmetic building damage, it is not uncommon for heavy duty construction processes (e.g., blasting and pile driving) to cause vibration of sufficient amplitudes to damage nearby buildings (FTA 2018). Ground-borne vibration is usually measured in terms of vibration velocity, either the root-mean-square (RMS) velocity or peak particle velocity (PPV). The RMS is best for characterizing human response to building vibration, and PPV is used to characterize potential for damage. Decibel notation acts to compress the range of numbers required to describe vibration. Vibration velocity level in decibels is defined as:

$$L_v = 20 \log_{10} [V/V_{ref}]$$

where "L_v" is the VdB, "V" is the RMS velocity amplitude, and "V_{ref}" is the reference velocity amplitude, or 1×10^{-6} inches/second (in/sec) used in the United States.

REGULATORY SETTING

Federal Guidelines

Federal Transit Administration

Noise. The construction noise criteria included in the *Federal Transit Administration (FTA) Transit Noise and Vibration Impact Assessment Manual* (2018) was used to evaluated potential construction noise impacts because Section 9.34.080(F)(3) of the Town's Municipal Code does not have daytime

construction noise level limits for activities that occur within the specified hours. Table C shows the FTA's Detailed Assessment Daytime Construction Noise Criteria based on the composite noise levels for each construction phase.

Table C: Detailed Assessment Daytime Construction Noise Criteria

Land Use	Daytime 1-hour L_{eq} (dBA)
Residential	80
Commercial	85
Industrial	90

Source: *Transit Noise and Vibration Impact Assessment Manual* (FTA 2018).
dBA = A-weighted decibels
L_{eq} = equivalent continuous sound level

Vibration. Vibration standards included in the FTA *Transit Noise and Vibration Impact Assessment Manual* (2018) were used to evaluate construction vibration impacts even though the Town exempts vibration levels generated from construction between the hours of 7:00 a.m. and 10:00 p.m. based on Section 9.34.090(C) of the Town's Municipal Code. Table D lists the potential vibration building damage criteria associated with construction activities.

Table D: Construction Vibration Damage Criteria

Building Category	PPV (in/sec)
Reinforced concrete, steel, or timber (no plaster)	0.50
Engineered concrete and masonry (no plaster)	0.30
Nonengineered-timber and masonry buildings	0.20
Buildings extremely susceptible to vibration damage	0.12

Source: *Transit Noise and Vibration Impact Assessment Manual* (FTA 2018).
FTA = Federal Transit Administration
in/sec = inches per second
PPV = peak particle velocity

Local Regulations

Town of Yucca Valley

General Plan. The Town's General Plan Noise Element (Town of Yucca Valley 2014) has established policies to meet the Town's noise-related goal. The applicable policies for the proposed project are listed below.

Goal N1: A noise environment where excessive noise from stationary, transportation-related, and temporary sources of noise are appropriately managed.

Policy N 1-3: Require daytime only truck deliveries to commercial and industrial uses adjacent to residential uses and other sensitive receptors unless there is no feasible alternative.

Policy N 1-13: Enforce Town noise standards and monitor compliance with noise standards.

Policy N 1-18: Enforce standards on the hours of operation for nonemergency construction.

Municipal Code. Section 9.34.080(B) of the Town's Municipal Code establishes noise standards for stationary and mobile noise sources affecting adjacent properties. Table E shows the exterior noise standards for stationary noise sources, and Table F shows the exterior and interior noise standards for mobile noise sources.

Table E: Noise Standards for Stationary Noise Sources

Affected Land Uses	Time Period	Noise Level (dBA)				
		L_{50}	L_{25}	L_8	L_2	L_{max}
Residential	7:00 a.m. to 10:00 p.m.	55	60	65	70	75
	10:00 p.m. to 7:00 a.m.	45	50	55	60	70
Professional Services	Anytime	55	60	65	70	75
Other Commercial	Anytime	60	65	70	75	80
Industrial	Anytime	70	75	80	85	90

Source: Town of Yucca Valley Municipal Code, Section 9.34.080(C) (Town of Yucca Valley 2024).
Note: No person shall operate or cause to be operated a source of sound at a location or allow the creation of noise on property owned, leased, occupied, or otherwise controlled by the person, which causes the noise level, when measured on another property, either incorporated or unincorporated, to exceed any one of the following:

L_{50} = The noise standard for a cumulative period of more than 30 minutes in any hour.
L_{25} = The noise standard plus 5 dBA for a cumulative period of more than 15 minutes in any hour.
L_8 = The noise standard plus 10 dBA for a cumulative period of more than 5 minutes in any hour.
L_2 = The noise standard plus 15 dBA for a cumulative period of more than 1 minute in any hour.
L_{max} = The noise standard plus 20 dBA for any period of time.

dBA = A-weighted decibel

Table F: Noise Standards for Mobile Noise Sources

Categories	Uses	Noise Standard (dBA L_{dn} or CNEL)	
		Interior[1]	Exterior[2,3]
Residential	Single-family, multi-family, duplex, mobile homes	45	60
Commercial	Amphitheater, concert hall, auditorium, movie theater	45	N/A
	Commercial retail, bank, restaurant	50	N/A
	Hotel, motel, transient housing	45	60
	Office building, research and development, professional offices	45	65
Institutional/Public	Hospital, nursing home, school classroom, religious institution, library	45	65
Open Space	Park	N/A	65

Source: Town of Yucca Valley Municipal Code, Section 9.34.080(C) (Town of Yucca Valley 2024).

[1] The indoor environment shall exclude bathrooms, kitchens, toilets, closets, and corridors.

[2] The outdoor environment shall be limited to: hospital/office building patios, hotel and motel recreation areas, mobile home parks, multi-family private patios or balconies, park picnic areas, private yard of single-family dwellings, and school playgrounds.

[3] An exterior noise level of up to 65 dBA CNEL shall be allowed provided exterior noise levels have been substantially mitigated through a reasonable application of the best available noise reduction technology, and interior noise exposure does not exceed 45 dBA CNEL with windows and doors closed. Requiring that windows and doors remain closed to achieve an acceptable interior noise level shall necessitate the use of air conditioning or mechanical ventilation.

CNEL = Community Noise Equivalent Level
dBA = A-weighted decibel
L_{dn} = day-night average noise level
N/A = not applicable

Section 9.34.080(F)(3) of the Town's Municipal Code exempts noise from temporary construction, maintenance, repair, or demolition activities between 7:00 a.m. and 10:00 p.m., except Sundays and federal holidays.

Section 9.34.090(C) of the Town's Municipal Code limits ground vibration that can be felt without the aid of instruments at or beyond the lot line, nor shall any vibration be allowed which produces a particle velocity greater than or equal to 0.2 inch per second measured at or beyond the lot line.

Also, vibration from motor vehicles not under the control of the subject use and temporary construction maintenance or demolition activities between 7:00 a.m. and 10:00 p.m. are exempt.

THRESHOLDS OF SIGNIFICANCE

Based on the *Guidelines for the Implementation of the California Environmental Quality Act* (*State CEQA Guidelines*), Appendix G, Public Resources Code, Sections 15000–15387, a project will normally have a significant effect on the environment related to noise if it will substantially increase the ambient noise levels for adjoining areas or conflict with adopted environmental plans and the goals of the community in which it is located. The following are the thresholds for potential noise impacts.

The *State CEQA Guidelines* indicate that a project would have a significant impact on noise if it would result in:

- Generation of a substantial temporary or permanent increase in ambient noise levels in the vicinity of the project in excess of standards established in the local general plan or noise ordinance, or applicable standards of other agencies;
- Generation of excessive ground-borne vibration or ground-borne noise levels; or
- For a project located within the vicinity of a private airstrip or an airport land use plan or, where such a plan has not been adopted, within 2 miles of a public airport or public use airport, expose people residing or working in the project area to excessive noise levels.

EXISTING SETTING

Overview of the Existing Noise Environment

The primary existing noise sources in the project area are transportation facilities and industrial activities. Traffic on SR-247, Buena Vista Drive, Sun Mesa Drive, and Newton Lane contributes to the ambient noise levels in the project vicinity. Industrial uses are located immediately west and south of the project site.

Land Uses in the Project Vicinity

Existing land uses within the project area include single-family residences, vacant land, and industrial uses. Single-family residences are located southeast of the project site. Industrial uses are located south and west of the project site. Vacant land is located north and east of the project site.

Ambient Noise Measurements

Two long-term (24-hour) noise level measurements were conducted from July 9 to July 10, 2024, and one long-term (24-hour) noise level measurement was conducted from July 10 to July 11, 2024, using Larson Davis Spark 706RC dosimeters to document the existing noise environment within the project area. Table G summarizes the results of the long-term noise level measurements along with a description of the measurement locations and noise sources that occurred during the measurements. As shown in Table G, daytime noise levels ranged from 40.7 to 63.1 dBA L_{eq} and nighttime noise levels ranged from 43.1 to 53.5 dBA L_{eq}. Also, the calculated CNEL levels at LT-1, LT-2, and LT-3 were 57.3, 57.7, and 57.9 dBA, respectively. The long-term noise level measurement survey sheets along with the hourly L_{eq}, L_{max}, and L_{min} results are provided in Attachment C. Figure 3 shows the long-term monitoring locations.

Table G: Long-Term Ambient Noise Monitoring Results

Monitor No.	Location Description	Noise Levels (dBA)		
		L_{eq}		CNEL
		Daytime[1]	Nighttime[2]	
LT-1	4831 Newton Lane. On a chain-link fence on the northwest corner of the property. Approximately 650 ft north of Buena Vista Drive, 318 ft east of Newton Lane, and 680 ft south of Sun Mesa Drive.	41.9–63.1	43.1–50.7	57.3
LT-2	West side of Newton Lane. On chain-link fence. Approximately 550 ft east of State Route 247 and 430 ft south of Sun Mesa Drive.	43.2–60.5	44.0–53.5	57.7
LT-3	West side of Newton Lane. On chain-link fence. Approximately 640 ft east of State Route 247 and 130 ft south of Sun Mesa Drive.	40.7–62.1	44.0–51.2	57.9

Source: Compiled by LSA (2024).
Note: LT-1 and LT-3 were conducted from July 9 to July 10, 2024. LT-2 was conducted from July 10 to July 11, 2024.
[1] Daytime = Hours between 7:00 a.m. and 10:00 p.m.
[2] Nighttime = Hours between 10:00 p.m. and 7:00 a.m.
CNEL = Community Noise Equivalent Level
dBA = A-weighted decibels
ft = foot/feet
L_{eq} = equivalent continuous sound level

Existing Aircraft Noise

The closest public airport to the project site is the Yucca Valley Airport, which is 2.6 miles southeast of the project site. Based on the *Airport Comprehensive Land Use Plan for Yucca Valley Airport* (San Bernardino County 1992), the project site is well beyond the 60 dBA CNEL noise contour. Also, there are no private airstrips within 2 miles of the project site. Therefore, the project would not expose people working in the project vicinity to aviation-related excessive noise levels, and this topic is not further discussed.

IMPACTS

Short-Term Construction Noise Impacts

Two types of short-term noise impacts would occur during project construction. The first type would be from construction crew commutes and the transport of construction equipment and materials to the project site and would incrementally raise noise levels on roadways leading to the site. The pieces of construction equipment for construction activities would move on site, would remain for the duration of each construction phase, and would not add to the daily traffic volume in the project vicinity. Although there would be a relatively high single-event noise exposure potential causing intermittent noise nuisance (passing trucks at 50 ft would generate up to a maximum of 84 dBA), the effect on longer-term ambient noise levels would be small because the number of daily construction-related vehicle trips is small compared to existing daily traffic volume on SR-247, Buena Vista Drive, and Sun Mesa Drive. The building construction phase and architectural coating phase would overlap that would generate the most trips out of all of the other construction phases, at 144 trips per day based on the California Emissions Estimator Model (CalEEMod) (Version 2022.1) results contained in Attachment B of the *Air Quality, Energy, and Greenhouse Gas Technical Memorandum for the Sun Mesa Mini Storage Project* (LSA 2024a). Roadways that would be used to access the project site are SR-247, Buena Vista Drive, and Sun Mesa Drive. The existing average daily traffic (ADT) volume on SR-247 ranges between 2,950 and 11,837 based on the 2022 California Department of Transportation (Caltrans) Annual Average Daily Truck Traffic for Truck Traffic on California State Highways (Caltrans 2022). Also, the existing ADT volume on Buena Vista Drive is 3,643 based on the *Yucca Valley General Plan Update Environmental Impact Report* (Town of Yucca Valley 2013). In addition, Sun Mesa Drive, is a two-lane road similar to Buena Vista Drive and would experience a similar noise increase. Based

on the information above, construction-related traffic would increase noise by up to 0.2 dBA. A noise level increase of less than 1 dBA would not be perceptible to the human ear. Therefore, short-term construction-related noise impacts associated with worker commute and equipment transport to the project site would be less than significant. No mitigation measures are required.

The second type of short-term noise impact is related noise generated from construction activities. Construction is performed in discrete steps, each of which has its own mix of equipment and, consequently, its own noise characteristics. The proposed project anticipates site preparation, grading, building construction, paving, and architectural coating phases of construction. These various sequential phases change the character of the noise generated on a project site. Therefore, the noise levels vary as construction progresses. Despite the variety in the type and size of construction equipment, similarities in the dominant noise sources and patterns of operation allow construction-related noise ranges to be categorized by work phase. Table H lists the L_{max} recommended for noise impact assessments for typical construction equipment included in the Federal Highway Administration (FHWA) *Highway Construction Noise Handbook* (2006), based on a distance of 50 ft between the equipment and a noise receptor.

Table H: Typical Construction Equipment Noise Levels

Equipment Description	Acoustical Usage Factor (%)[1]	Maximum Noise Level (L_{max}) at 50 ft[2]
Backhoes	40	80
Compactor (ground)	20	80
Compressor (air)	40	80
Concrete Mixer Truck	40	85
Cranes	16	85
Dozers	40	85
Dump Trucks	40	84
Excavators	40	85
Flat Bed Trucks	40	84
Manlift (Forklift)	20	85
Front-end Loaders	40	80
Generator	50	82
Graders	40	85
Jackhammers	20	85
Pavement Scarifier	20	85
Paver	50	77
Pickup Truck	40	55
Pneumatic Tools	50	85
Pumps	50	77
Rock Drills	20	85
Rollers	20	85
Scrapers	40	85
Tractors	40	84
Welder/Torch	40	73

Source: Table 1, *FHWA Roadway Construction Noise Model User's Guide* (FHWA 2006).
Note: Noise levels reported in this table are rounded to the nearest whole number.
[1] Usage factor is the percentage of time during a construction noise operation that a piece of construction equipment is operating at full power.
[2] Maximum noise levels were developed based on Specification 721.560 from the Central Artery/Tunnel program to be consistent with the City of Boston's Noise Code for the "Big Dig" project.
FHWA = Federal Highway Administration
L_{max} = maximum instantaneous sound level
ft = foot/feet

Table I lists the anticipated construction equipment for each construction phase based on the CalEEMod (Version 2022.1) results contained in Attachment B of the *Air Quality, Energy, and Greenhouse Gas Technical Memorandum for the Sun Mesa Mini Storage Project* (LSA 2024a). Table I shows the combined noise level at 50 ft from all of the equipment in each phase and the L_{eq} noise level for each equipment at 50 ft based on the quantity, reference instantaneous maximum (L_{max}) noise level at 50 ft, and the acoustical usage factor. As shown in Table I, construction noise levels would reach up to 88.5 L_{eq} at a distance of 50 ft.

Table I: Summary of Construction Phase, Equipment, and Noise Levels

Construction Phase	Construction Equipment	Quantity	Reference Noise Level at 50 ft (dBA L_{max})	Acoustical Usage Factor[1] (%)	Noise Level at 50 ft (dBA L_{eq})	Combined Noise Level at 50 ft (dBA L_{eq})
Site Preparation	Dozer	3	85	40	85.8	87.3
	Front-End Loader	4	80	40	82.0	
Grading	Grader	1	85	40	81.0	87.0
	Excavator	1	85	40	81.0	
	Front-End Loaders	3	80	40	80.8	
	Dozer	1	85	40	81.0	
Phase 1 and 2 Trenching	Excavator	1	85	40	81.0	82.2
	Front-End Loaders	1	80	40	76.0	
Phase 1 Building Construction	Crane	1	85	16	77.0	86.5
	Forklifts	3	85	20	82.8	
	Generator	1	82	50	79.0	
	Welders	1	73	40	69.0	
	Front-End Loaders	3	80	40	80.8	
Paving	Front-End Loaders	1	80	40	76.0	88.5
	Concrete Mixer Truck	2	85	40	84.0	
	Paver	1	85	50	82.0	
	Pavement Scarafier	2	85	20	81.0	
	Roller	2	85	20	81.0	
Phase 2 Building Construction	Crane	1	85	16	77.0	86.5
	Forklifts	3	85	20	82.8	
	Generator	1	82	50	79.0	
	Front-End Loaders	3	80	40	80.8	
	Welders	1	73	40	69.0	
Architectural Coating	Air Compressors	1	80	40	76.0	76.0

Source: Compiled by LSA (2024).

[1] The acoustical usage factor is the percentage of time during a construction noise operation that a piece of construction equipment operates at full power.

dBA = A-weighted decibels
ft = foot/feet
L_{eq} = equivalent continuous sound level
L_{max} = maximum instantaneous noise level

The closest residential property line is approximately 375 ft from the center of the project site and may be subject to short-term construction noise reaching 71.0 dBA L_{eq} generated by construction activities in the project area. Construction noise is temporary and would stop once project construction is completed. Compliance with the Town's hours of construction pursuant to Section 9.34.080(F)(3) of the Town's Municipal Code listed below would ensure construction-related noise would not be generated during the more sensitive nighttime hours. Furthermore, construction related noise levels would be below the FTA noise level standard of 80 dBA L_{eq} for residential uses.

Therefore, noise levels generated from project construction would be less than significant. No mitigation measures are required.

- The construction contractor shall limit construction activities to between the hours of 7:00 a.m. and 10:00 p.m. Monday through Saturday pursuant to Sections 9.34.080(F)(3) and 9.34.090(C) of the Town's Municipal Code (Town of Yucca Valley 2024). Construction is prohibited outside these hours and anytime on Sundays and federal holidays.

Short-Term Construction Vibration Impacts

Although vibration levels from construction-related activities between the hours of 7:00 a.m. and 10:00 p.m. Monday through Saturday is exempt pursuant to Sections 9.34.080(F)(3) and 9.34.090(C) of the Town's Municipal Code (Town of Yucca Valley 2024), this construction vibration impact analysis assesses the potential for building damage using vibration levels in PPV (in/sec). Vibration levels calculated in PPV are best for characterizing damage potential.

Table J shows the reference vibration levels at a distance of 25 ft for each type of standard construction equipment from the *Transit Noise and Vibration Impact Assessment Manual* (FTA 2018). Project construction is expected to require the use of large bulldozers and loaded trucks, which would generate ground-borne vibration levels of up to 0.089 PPV (in/sec) and 0.076 PPV (in/sec), respectively, when measured at 25 ft.

Table J: Vibration Source Amplitudes for Construction Equipment

Equipment	Reference PPV (in/sec) at 25 ft
Pile Driver (Impact), Typical	0.644
Pile Driver (Sonic), Typical	0.170
Vibratory Roller	0.210
Hoe Ram	0.089
Large Bulldozer[1]	**0.089**
Caisson Drilling	0.089
Loaded Trucks[1]	**0.076**
Jackhammer	0.035
Small Bulldozer	0.003

Source: *Transit Noise and Vibration Impact Assessment Manual* (FTA 2018).
[1] The equipment shown in **bold** is expected to be used on site.
ft = foot/feet
in/sec = inches per second
FTA = Federal Transit Administration
PPV = peak particle velocity

The greatest vibration levels are anticipated to occur during the site preparation and grading phase. All other phases are expected to result in lower vibration levels. The distance to the nearest buildings for vibration impact analysis is measured between the nearest off-site buildings and the project boundary (assuming the construction equipment would be used at or near the project boundary) because vibration impacts normally occur within the buildings.

The formula for vibration transmission is provided below:

$$PPV_{equip} = PPV_{ref} \times (25/D)^{1.5}$$

Table K lists the projected vibration levels from various construction equipment expected to be used on the project site at the project construction boundary to the nearest buildings in the project

vicinity. As shown in Table K, the residential and industrial buildings to the southeast and south of the project site are approximately 200 ft and 80 ft from the project construction boundary and would experience a vibration level of up to 0.004 PPV (in/sec) and 0.016 PPV (in/sec), respectively. These vibration levels would not result in building damage because residential and industrial buildings would be constructed equivalent to or better than nonengineered timber and masonry and vibration levels would not exceed the FTA vibration damage threshold of 0.20 PPV (in/sec). Other building structures that surround the project site would experience lower vibration levels because they are farther away and would be constructed equivalent to or better than

Table K: Potential Construction Vibration Damage

Land Use	Direction	Equipment/ Activity	Reference Vibration Level at 25 ft	Distance to Structure (ft)[1]	Vibration Level
			PPV (in/sec)		PPV (in/sec)
Residence	Southeast	Large bulldozers	0.089	200	0.004
		Loaded trucks	0.076	200	0.003
Industrial	South	Large bulldozers	0.089	80	0.016
		Loaded trucks	0.076	80	0.016

Source: Compiled by LSA (2024).
Note: The FTA-recommended building damage threshold is 0.20 PPV (in/sec) at the receiving nonengineered timber and masonry building.
[1] Distance from the project construction boundary to the building structure.
ft = foot/feet
in/sec = inches per second
FTA = Federal Transit Administration
PPV = peak particle velocity

nonengineered timber and masonry. Also, compliance with the Town's hours of construction pursuant to Sections 9.34.080(F)(3) and 9.34.090(C) of the Town's Municipal Code (Town of Yucca Valley 2024) discussed above would ensure that vibration levels generated from construction-related activities would be exempt. Therefore, construction vibration impacts during project construction would be less than significant. No mitigation measures are required.

Long-Term Traffic Noise Impacts

The project is estimated to generate an ADT volume of 137 based on the *Sun Mesa Mini Storage Project Trip Generation and Vehicle Miles Traveled Memorandum* (LSA 2024b). The existing ADT volume on SR-247 ranges between 2,950 and 11,837 based on the *2022 Caltrans Annual Average Daily Truck Traffic for Truck Traffic on California State Highways* (Caltrans 2022). Also, the existing ADT volume on Buena Vista Drive is 3,643 based on the *Yucca Valley General Plan Update Environmental Impact Report* (Town of Yucca Valley 2013). In addition, Sun Mesa Drive is two-lane road similar to Buena Vista Drive and would experience a similar noise increase . It takes a doubling of traffic to increase traffic noise levels by 3 dBA. Based on the information above, project-related traffic on SR-247, Buena Vista Drive, and Sun Mesa Drive would increase traffic noise levels by up to 0.2 dBA. A noise level increase of less than 1 dBA would not be perceptible to the human ear. Therefore, no traffic noise impacts from project-related traffic on off-site sensitive receptors would occur. No mitigation measures are required.

Long-Term Stationary Source Noise Impacts

Operation of the proposed project would include parking activities and heating, ventilation, and air conditioning (HVAC) equipment that would result in stationary noise impacts as described below.

Access to the proposed storage facility would be between the hours of 6:00 a.m. and 10:00 p.m. 7 days per week. The following provides a detailed noise analysis and discussion of each stationary noise source.

Parking Activities

The proposed project would include 10 parking spaces, and parking activities would occur during access hours described above. Noise generated from parking lot activities would include noise generated by vehicles traveling at slow speeds, engine start-up noise, car door slams, car horns, car alarms, and tire squeals. Representative parking activities would generate a noise level of 76.3 dBA L_8 at 20 ft, based on measurements conducted by LSA (LSA 2016). At a distance of 50 ft, noise levels would be 68.2 dBA L_8. It is estimated that parking activities would generate the maximum noise level for a cumulative period of 4 minutes in any hour during daytime hours and 2 minutes in any hour during nighttime hours based on the project's trip generation (LSA 2024b), which would be 56.4 dBA and 53.4 dBA L_{eq} at a distance of 50 ft, respectively.

Heating, Ventilation, and Air Conditioning

The proposed project would include an HVAC unit for the manager's unit building. The HVAC equipment could operate 24 hours per day. The specifications of the HVAC equipment, including the reference noise level, are provided in Attachment D. The HVAC unit would generate a noise level of 44.4 dBA L_{eq} at a distance of 50 ft.

Stationary Noise Impact Summary

Tables L and M list the individual stationary noise sources from daytime and nighttime, respectively, project operations at each of the surrounding adjacent uses and show the reference noise levels at 50 ft and combined noise levels. As shown in Tables L and M, noise levels generated from project operations during daytime and nighttime hours at the closest residential property line would reach up to a combined stationary noise level of 38.2 and 35.4 dBA L_{eq}, respectively. These noise levels would not exceed the Town's daytime and nighttime 30-minute noise standard of 55 dBA and 45 dBA for residential uses, respectively. Also, maximum noise levels generated from project operations during both daytime and nighttime hours at the closest residential property line would reach up to 51.5 dBA L_{max}. This maximum noise level would not exceed the Town's daytime and nighttime maximum noise standards of 75 dBA and 70 dBA for residential uses, respectively.

Tables L and M shows that noise levels generated from project operations during daytime and nighttime hours at the closest industrial property line would reach up to a combined stationary noise level of 51.9 and 49.1 dBA L_{eq}, respectively. These noise levels would not exceed the Town's 30-minute noise standard of 70 dBA for industrial uses. Also, maximum noise levels generated from project operations during both daytime and nighttime hours at the closest industrial property line would reach up to 65.4 dBA L_{max}. This maximum noise level would not exceed the Town's maximum noise standard of 90 dBA for industrial uses, respectively. Therefore, noise generated from project operations would be less than significant. No mitigation measures are required.

Long-Term Vibration Impacts

The proposed project would not generate vibration. In addition, vibration levels generated from project-related traffic on the roadways (SR-247, Buena Vista Drive, Sun Mesa Drive, and Newton

Lane) leading to the project site are unusual for on-road vehicles because the rubber tires and suspension systems of on-road vehicles provide vibration isolation. Vibration generated from operations of the project would be minimal to negligible and would not exceed the Town's vibration standard of 0.2 in/sec. Therefore, vibration impacts from project-related operations would be less than significant. No mitigation measures are required.

Table L: Stationary Daytime Noise Levels

Land Use	Direction	Noise Source	Reference Noise Level at 50 ft (dBA)		Distance (ft)	Distance Attenuation (dBA)	Noise Level (dBA)		Combined Noise Level (dBA L_{eq})
			L_{max}	L_{eq}			L_{max}	L_{eq}	
Residence	Southeast	Parking Activity	70.0	56.4	420	18.5	51.5	37.9	38.2
		HVAC	--	44.4	430	18.7	--	25.7	
Industrial	South	Parking Activity	70.0	56.4	85	4.6	65.4	51.8	51.9
		HVAC	--	44.4	120	7.6	--	36.8	
Industrial	West	Parking Activity	70.0	56.4	365	17.3	52.7	39.1	39.4
		HVAC	--	44.4	370	17.4	--	27.0	

Source: Compiled by LSA (2024).
dBA = A-weighted decibels
ft = foot/feet
HVAC = heating, ventilation, and air conditioning

L_{eq} = equivalent continuous sound level
L_{max} = maximum instantaneous noise level

Table M: Stationary Nighttime Noise Levels

Land Use	Direction	Noise Source	Reference Noise Level at 50 ft (dBA)		Distance (ft)	Distance Attenuation (dBA)	Noise Level (dBA)		Combined Noise Level (dBA L_{eq})
			L_{max}	L_{eq}			L_{max}	L_{eq}	
Residence	Southeast	Parking Activity	70.0	53.4	420	18.5	51.5	34.9	35.4
		HVAC	--	44.4	430	18.7	--	25.7	
Industrial	South	Parking Activity	70.0	53.4	85	4.6	65.4	48.8	49.1
		HVAC	--	44.4	120	7.6	--	36.8	
Industrial	West	Parking Activity	70.0	53.4	365	17.3	52.7	36.1	36.6
		HVAC	--	44.4	370	17.4	--	27.0	

Source: Compiled by LSA (2024).
dBA = A-weighted decibels
ft = foot/feet
HVAC = heating, ventilation, and air conditioning

L_{eq} = equivalent continuous sound level
L_{max} = maximum instantaneous noise level

REGULATORY COMPLIANCE MEASURES

Compliance with the following measure would ensure that construction noise would be generated only during allowable times:

- The construction contractor shall limit construction activities to between the hours of 7:00 a.m. and 10:00 p.m. Monday through Saturday pursuant to Sections 9.34.080(F)(3) and 9.34.090(C) of the Town's Municipal Code (Town of Yucca Valley 2024). Construction is prohibited outside these hours and anytime on Sundays and federal holidays.

Attachments:
A: References
B: Figures
C: Noise Survey Sheets
D: HVAC Specifications

ATTACHMENT A

REFERENCES

California Department of Transportation (Caltrans). 2022. Caltrans Annual Average Daily Truck Traffic for Truck Traffic on California State Highways. Website: https://dot.ca.gov/-/media/dot-media/programs/traffic-operations/documents/census/2022/2022-truck-aadt.xlsx (accessed August 2024).

Federal Highway Administration (FHWA). 2006. *Highway Construction Noise Handbook*. Roadway Construction Noise Model, FHWA-HEP-06-015. DOT-VNTSC-FHWA-06-02. NTIS No. PB2006-109012. August.

Federal Transit Administration (FTA). 2018. *Transit Noise and Vibration Impact Assessment Manual*. FTA Report No. 0123. September. Website: https://www.transit.dot.gov/sites/fta.dot.gov/files/docs/research-innovation/118131/transit-noise-and-vibration-impact-assessment-manual-fta-report-no-0123_0.pdf (accessed August 2024).

Harris, Cyril M., editor. 1991. *Handbook of Acoustical Measurements and Noise Control*. Third Edition.

LSA Associates, Inc. (LSA). 2024a. Air Quality, Energy, and Greenhouse Gas Technical Memorandum for the Sun Mesa Mini Storage Project. September 13.

_____. 2024b. Sun Mesa Mini Storage Project Trip Generation and Vehicle Miles Traveled Memorandum. July 18.

_____. 2016. *Operational Noise Impact Analysis for Richmond Wholesale Meat Distribution Center*. May.

San Bernardino County. 1992. Airport Comprehensive Land Use Plan for Yucca Valley Airport. February. Website: https://www.sbcounty.gov/Uploads/lus/Airports/YuccaValley.pdf (accessed August 2024).

Town of Yucca Valley. 2013. Yucca Valley General Plan Update Environmental Impact Report. August. Website: https://www.yucca-valley.org/our-town/departments/community-development/planning/general-plan-update (accessed August 2024).

_____. 2014. General Plan Noise Element. February 4. Website: https://www.yucca-valley.org/home/showpublisheddocument/2594/637009395714400000 (accessed August 2024).

_____. 2024. Municipal Code. April 2.

ATTACHMENT B

FIGURES

Figure 1: Project Location
Figure 2: Site Plan
Figure 3: Noise Monitoring Locations

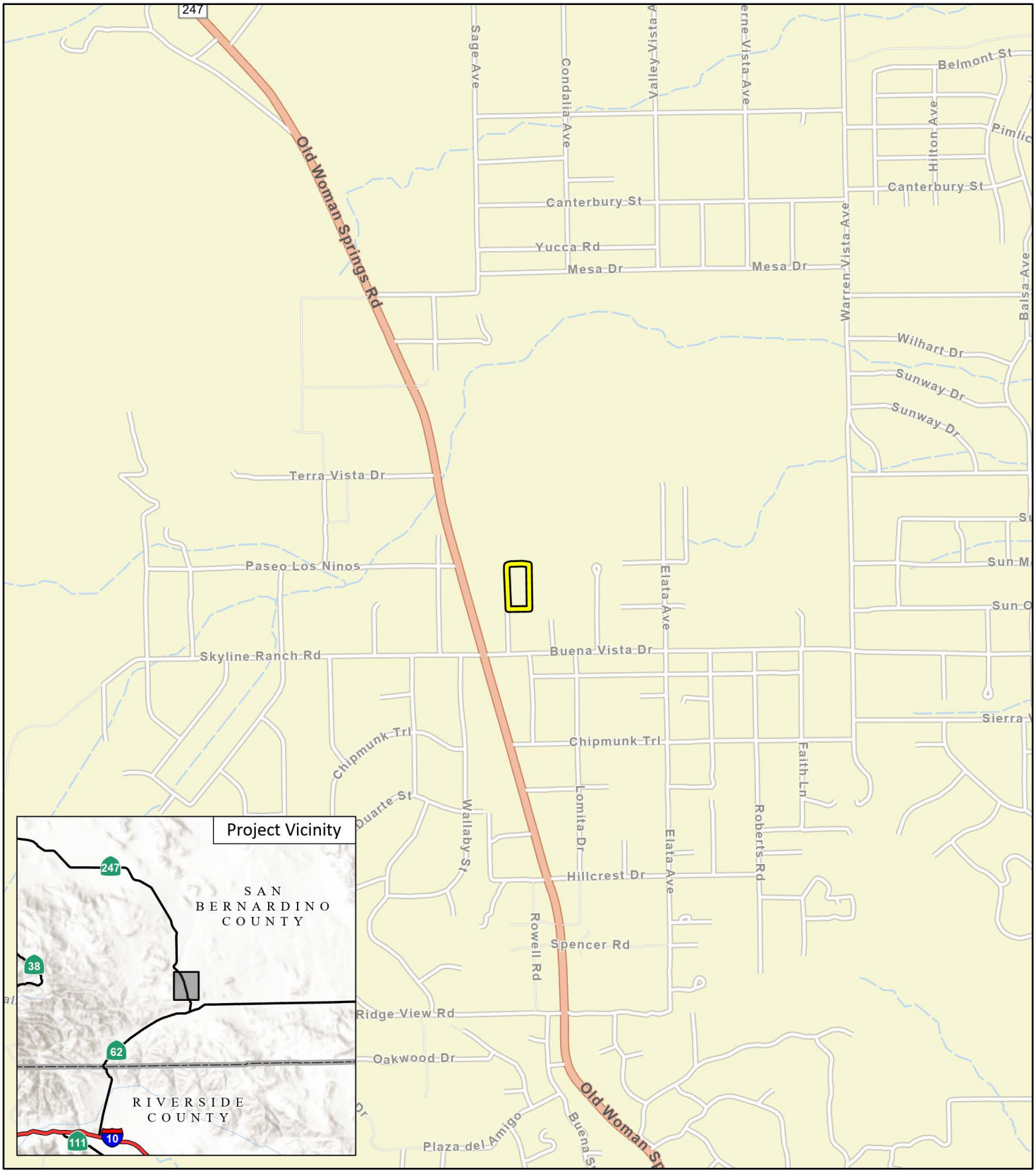

LSA

Project Area

FIGURE 1

N

0 1000 2000
FEET

SOURCE: Esri (2024)

I:\20231230\GIS\Pro\Sun Mesa Mini Storage Project\Sun Mesa Mini Storage Project.aprx (7/9/2024)

Sun Mesa (Billings) Mini Storage Project

Project Location

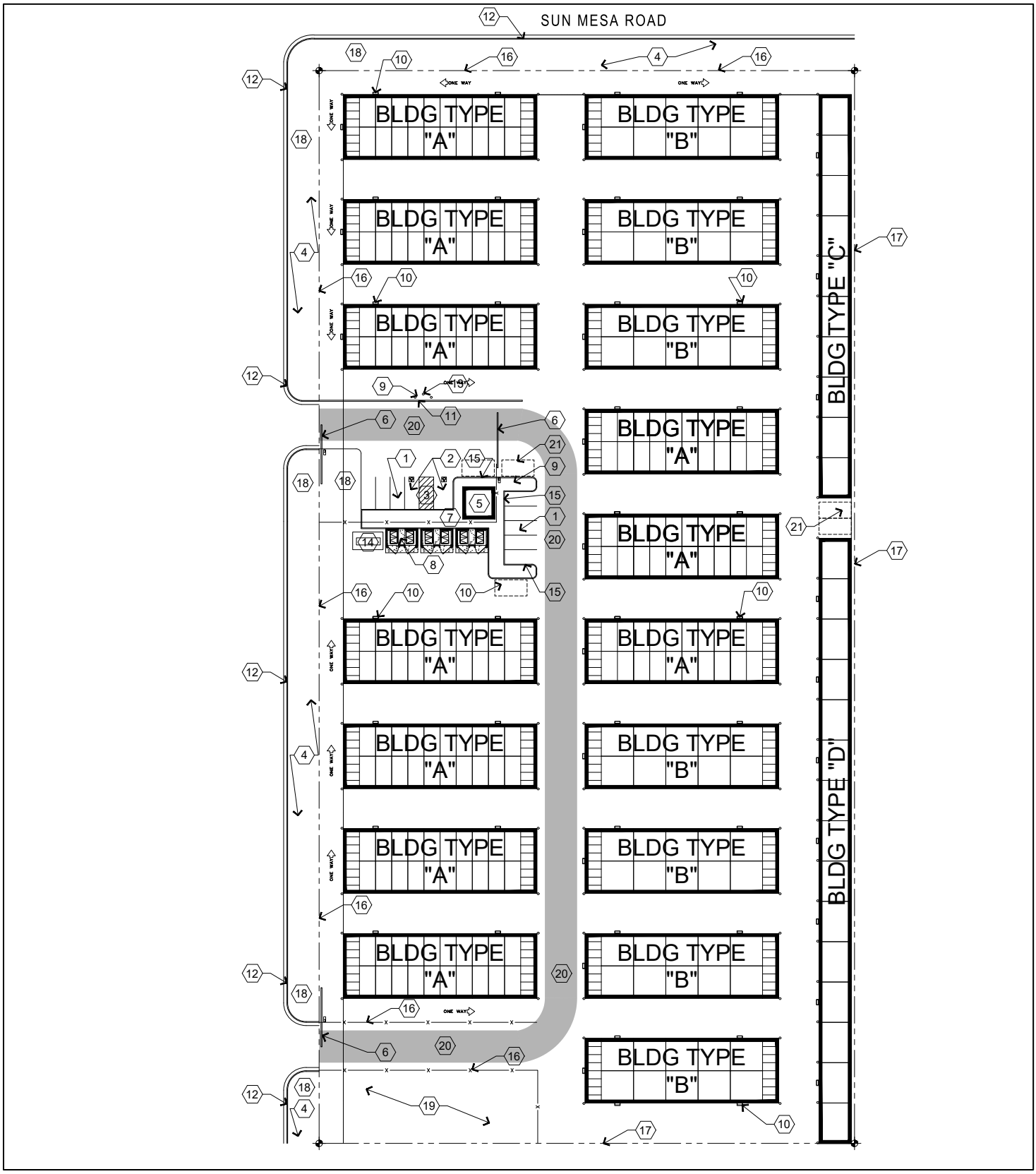

LSA

FIGURE 2

NOT TO SCALE

Sun Mesa (Billings) Mini Storage Project

Site Plan

SOURCE: DRP Enterprises

I:\2023\20231230\G\Site_Plan.ai (7/25/2024)

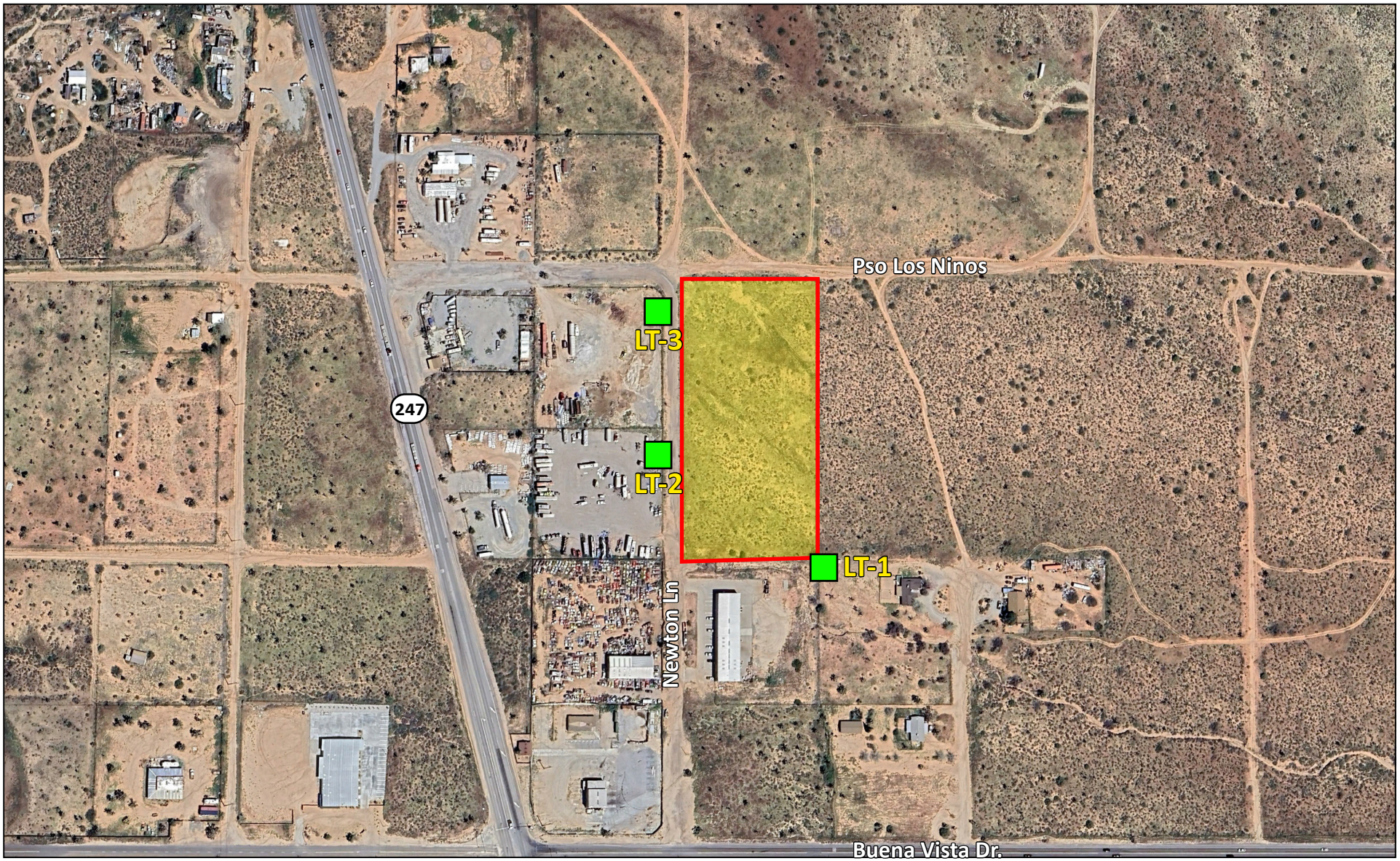

LSA

FIGURE 3

LEGEND

Project Site Boundary

LT-1 Long-term Noise Monitoring Location

N

0 110 220

FEET

SOURCE: Google Earth 2024

Sun Mesa (Billings) Mini Storage Project

Noise Monitoring Locations

I:\E\ESL2201.88\G\Noise_Locs.ai (7/25/2024)

ATTACHMENT C

NOISE SURVEY SHEETS

Noise Measurement Survey – 24 HR

Project Number: 20231230
Project Name: Sun Mesa Mini Storage

Test Personnel: Amber Hazelrigg
Equipment: Spark 706RC (SN: 17815)

Site Number: LT-1 Date: 7/9/24

Time: From 1:00 p.m. To 1:00 p.m.

Site Location: 4831 Newton Lane. On a chain-linked fence on the northwest corner of the property. Approximately 650 ft north of Buena Vista Drive, 318 ft east of Newton Lane, and 680 ft south of Sun Mesa Drive.

Primary Noise Sources: No primary are secondary noises were observed.

Comments: To the east are a few residential homes.

Photo:

Long-Term (24-Hour) Noise Level Measurement Results at LT-1

Start Time	Date	Noise Level (dBA)		
		L_{eq}	L_{max}	L_{min}
1:00 PM	7/9/24	62.9	78.4	43.4
2:00 PM	7/9/24	63.1	76.6	43.8
3:00 PM	7/9/24	59.3	76.6	42.7
4:00 PM	7/9/24	58.7	80.1	41.0
5:00 PM	7/9/24	60.9	79.7	38.5
6:00 PM	7/9/24	60.3	77.6	39.4
7:00 PM	7/9/24	53.6	70.1	37.2
8:00 PM	7/9/24	47.9	63.9	39.0
9:00 PM	7/9/24	47.2	64.9	38.5
10:00 PM	7/9/24	45.4	59.4	36.9
11:00 PM	7/9/24	43.8	57.4	36.4
12:00 AM	7/10/24	44.0	60.4	36.2
1:00 AM	7/10/24	43.8	61.8	36.6
2:00 AM	7/10/24	43.1	57.6	36.2
3:00 AM	7/10/24	44.2	59.3	36.0
4:00 AM	7/10/24	46.5	60.7	35.9
5:00 AM	7/10/24	47.7	60.2	36.8
6:00 AM	7/10/24	50.7	62.9	41.2
7:00 AM	7/10/24	48.1	61.7	39.0
8:00 AM	7/10/24	41.9	54.0	37.6
9:00 AM	7/10/24	43.5	58.8	36.5
10:00 AM	7/10/24	45.0	61.6	36.4
11:00 AM	7/10/24	45.1	63.2	36.6
12:00 PM	7/10/24	47.4	66.6	36.5

Source: Compiled by LSA Associates, Inc. (2024).
dBA = A-weighted decibel
L_{eq} = equivalent continuous sound level
L_{max} = maximum instantaneous noise level
L_{min} = minimum measured sound level

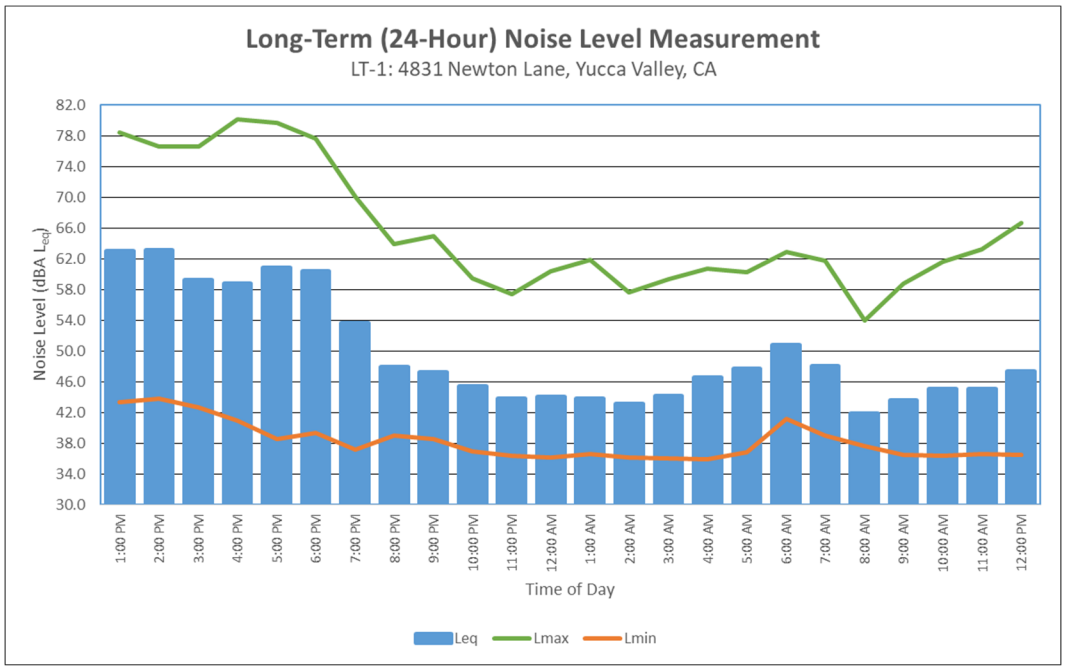

Noise Measurement Survey – 24 HR

Project Number: 20231230
Project Name: Sun Mesa Mini Storage

Test Personnel: Amber Hazelrigg
Equipment: Spark 706RC (SN: 17206)

Site Number: LT-2 Date: 7/10/24

Time: From 2:00 p.m. To 2:00 p.m.

Site Location: West side of Newton Lane. On chain-linked fence. Approximately 550 ft east of Highway 247 and 430 ft south of Sun Mesa Drive.

Primary Noise Sources: No primary are secondary noises were observed.

Comments: A scrap yard is adjacent on the south side.

Photo:

Long-Term (24-Hour) Noise Level Measurement Results at LT-2

Start Time	Date	Noise Level (dBA)		
		L_{eq}	L_{max}	L_{min}
11:00 AM	7/10/24	58.7	70.0	38.8
12:00 PM	7/10/24	59.9	73.9	39.9
1:00 PM	7/10/24	60.5	75.5	42.6
2:00 PM	7/10/24	54.9	77.2	35.6
3:00 PM	7/10/24	53.4	72.4	38.6
4:00 PM	7/10/24	50.7	65.3	36.0
5:00 PM	7/10/24	49.5	67.8	35.4
6:00 PM	7/10/24	47.8	62.9	34.8
7:00 PM	7/10/24	53.5	70.6	35.7
8:00 PM	7/10/24	51.1	67.8	36.3
9:00 PM	7/11/24	50.9	74.0	35.4
10:00 PM	7/11/24	44.0	58.3	34.8
11:00 PM	7/11/24	46.4	59.0	35.1
12:00 AM	7/11/24	49.2	61.5	35.6
1:00 AM	7/11/24	47.3	59.6	35.1
2:00 AM	7/11/24	52.2	67.6	36.7
3:00 AM	7/11/24	50.7	66.3	35.5
4:00 AM	7/11/24	48.9	68.6	35.0
5:00 AM	7/11/24	46.5	62.8	35.1
6:00 AM	7/11/24	48.2	68.7	35.0
7:00 AM	7/11/24	43.2	61.4	34.2
8:00 AM	7/11/24	47.2	72.3	33.8
9:00 AM	7/11/24	51.0	77.9	34.3
10:00 AM	7/11/24	44.9	60.4	34.1

Source: Compiled by LSA Associates, Inc. (2024).
dBA = A-weighted decibel
L_{eq} = equivalent continuous sound level
L_{max} = maximum instantaneous noise level
L_{min} = minimum measured sound level

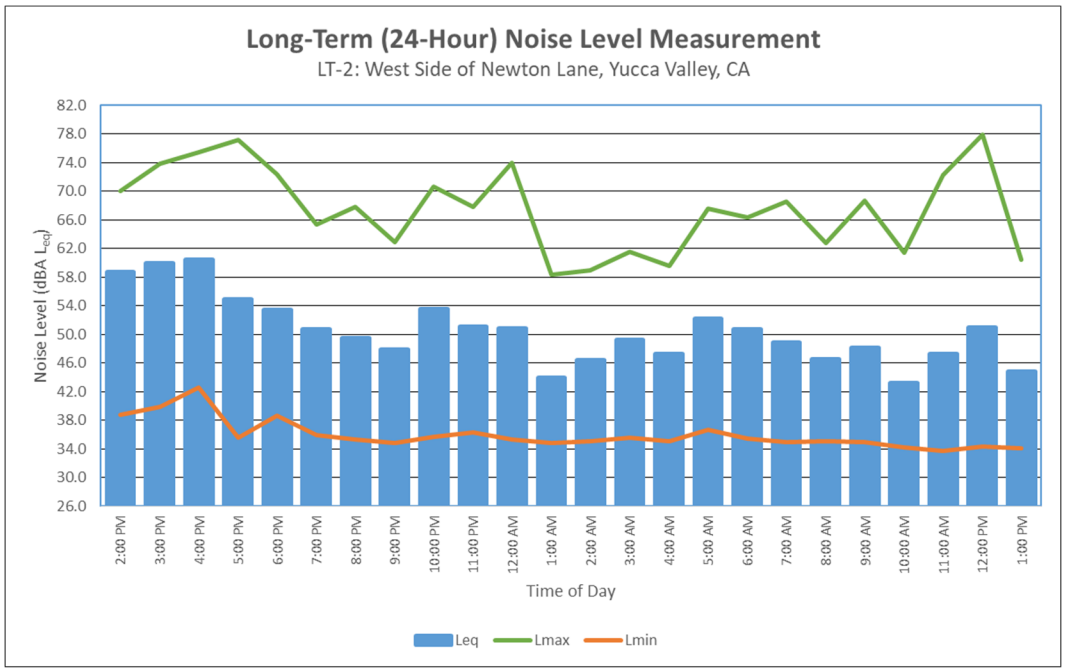

Noise Measurement Survey – 24 HR

Project Number: 20231230
Project Name: Sun Mesa Mini Storage

Test Personnel: Amber Hazelrigg
Equipment: Spark 706RC (SN: 18571)

Site Number: LT-3 Date: 7/9/24

Time: From 1:00 p.m. To 1:00 p.m.

Site Location: West side of Newton Lane. On chain-linked fence. Approximately 640 ft east of Highway 247 and 130 ft south of Sun Mesa Drive.

Primary Noise Sources: No primary are secondary noises were observed.

Comments:

Photo:

Long-Term (24-Hour) Noise Level Measurement Results at LT-3

Start Time	Date	Noise Level (dBA)		
		L_{eq}	L_{max}	L_{min}
1:00 PM	7/9/24	61.6	74.3	43.6
2:00 PM	7/9/24	62.1	74.5	43.4
3:00 PM	7/9/24	61.7	73.8	40.8
4:00 PM	7/9/24	60.7	75.4	40.6
5:00 PM	7/9/24	61.7	75.2	41.1
6:00 PM	7/9/24	59.4	72.5	41.7
7:00 PM	7/9/24	51.6	64.4	34.6
8:00 PM	7/9/24	50.6	67.7	37.6
9:00 PM	7/9/24	49.7	65.4	34.5
10:00 PM	7/9/24	47.4	65.5	33.9
11:00 PM	7/9/24	45.8	62.1	34.4
12:00 AM	7/10/24	45.8	66.3	34.3
1:00 AM	7/10/24	46.0	62.9	34.4
2:00 AM	7/10/24	44.0	61.3	34.4
3:00 AM	7/10/24	46.3	61.1	34.6
4:00 AM	7/10/24	49.1	62.2	34.5
5:00 AM	7/10/24	50.0	64.5	35.1
6:00 AM	7/10/24	51.2	67.1	37.8
7:00 AM	7/10/24	47.7	58.9	33.8
8:00 AM	7/10/24	40.7	65.0	33.3
9:00 AM	7/10/24	45.4	69.0	33.3
10:00 AM	7/10/24	42.7	59.7	33.3
11:00 AM	7/10/24	42.4	57.4	33.6
12:00 PM	7/10/24	44.5	62.3	33.0

Source: Compiled by LSA Associates, Inc. (2024).
dBA = A-weighted decibel
L_{eq} = equivalent continuous sound level
L_{max} = maximum instantaneous noise level
L_{min} = minimum measured sound level

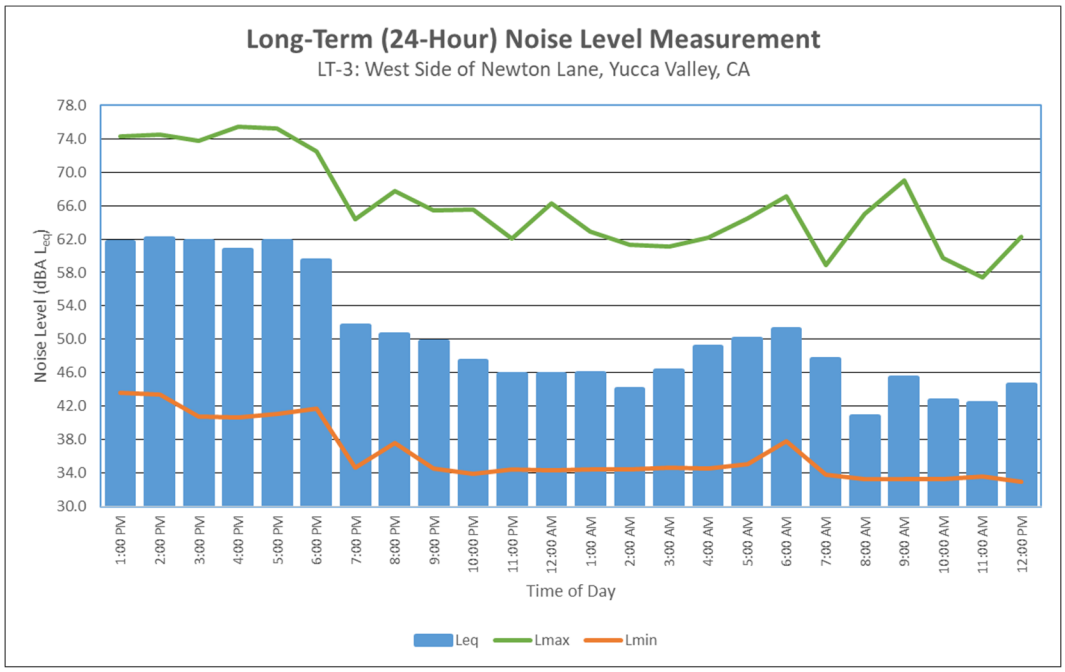

ATTACHMENT D

HVAC SPECIFICATIONS

The new degree of comfort.™

Rheem *Classic*® Series Air Conditioners

RA14 Series

Efficiencies up to 14 SEER/11.5 EER
Nominal Sizes 1 1/2 to 5 Ton [5.28 to 17.6 kW]
Cooling Capacities 17.3 to 60.5 kBTU
[5.7 to 17.7 kW]

"Proper sizing and installation of equipment is critical to achieve optimal performance. Split system air conditioners and heat pumps must be matched with appropriate coil components to meet Energy Star. Ask your Contractor for details or visit www.energystar.gov."

- Composite base pan – dampens sound, captures louver panels, eliminates corrosion and reduces number of fasteners needed
- Powder coat paint system – for a long lasting professional finish
- Scroll compressor – uses 70% fewer moving parts for higher efficiency and increased reliability
- Modern cabinet aesthetics – increased curb appeal with visually appealing design
- Curved louver panels – provide ultimate coil protection, enhance cabinet strength, and increased cabinet rigidity
- Optimized fan orifice – optimizes airflow and reduces unit sound
- Rust resistant screws – confirmed through 1500-hour salt spray testing
- PlusOne™ **Expanded Valve Space** – 3"-4"-5" service valve space – provides a minimum working area of 27-square inches for easier access
- PlusOne™ **Triple Service Access** – 15" wide, industry leading corner service access – makes repairs easier and faster. The two fastener removable corner allows optimal access to internal unit components. Individual louver panels come out once fastener is removed, for faster coil cleaning and easier cabinet reassembly
- Diagnostic service window with two-fastener opening – provides access to the high and low pressure.
- External gauge port access – allows easy connection of "low-loss" gauge ports
- Single-row condenser coil – makes unit lighter and allows thorough coil cleaning to maintain "out of the box" performance
- 35% fewer cabinet fasteners and fastener-free base – allow for faster access to internal components and hassle-free panel removal
- Service trays – hold fasteners or caps during service calls
- QR code – provides technical information on demand for faster service calls
- Fan motor harness with extra long wires allows unit top to be removed without disconnecting fan wire.

TABLE OF CONTENTS

Standard Feature 3
Available SKUs 3
Features & Benefits 4-5
Model Number Identification 6-7
General Data/Electrical Data 8
Accessories 9
Weighted Sound Power 9
Unit Dimensions 10
Clearances 11
Wiring Diagrams 12
Application Guidelines 12
Refrigerant Line Size Information 13-16
Performance Data 17
Guide Specifications 18
Limited Warranty 19

Standard Feature Table

STANDARD FEATURES							
Feature	**18**	**24**	**30**	**36**	**42**	**48**	**60**
R-410a Refrigerant	√	√	√	√	√	√	√
Maximum SEER	15.5	15	15.5	15.5	15	15	14
Maximum EER	13	13	13	13	13	13	12
Scroll Compressor	√	√	√	√	√	√	√
Field Installed Filter Drier	√	√	√	√	√	√	√
Front Seating Service Valves	√	√	√	√	√	√	√
Internal Pressure Relief Valve	√	√	√	√	√	√	√
Internal Thermal Overload	√	√	√	√	√	√	√
Long Line capability	√	√	√	√	√	√	√
Low Ambient capability with Kit	√	√	√	√	√	√	√
3-4-5 Expanded Valve Space	√	√	√	√	√	√	√
Composite Basepan	√	√	√	√	√	√	√
2 Screw Control Box Access	√	√	√	√	√	√	√
15" Access to Internal Components	√	√	√	√	√	√	√
Quick release louver panel design	√	√	√	√	√	√	√
No fasteners to remove along bottom	√	√	√	√	√	√	√
Optimized Venturi Airflow	√	√	√	√	√	√	√
Single row condenser coil	√	√	√	√	√	√	√
Powder coated paint	√	√	√	√	√	√	√
Rust resistant screws	√	√	√	√	√	√	√
QR code	√	√	√	√	√	√	√
External gauge ports	√	√	√	√	√	√	√
Service trays	√	√	√	√	√	√	√

√ = Standard

Available SKUs

Available Models	Description
RA1418AJ1NA	*Classic*® Series 1 1/2 ton 14 SEER Single-Stage Air Conditioner-208/230/1/60
RA1418AJ1NB	*Classic*® Series 1 1/2 ton 14 SEER Single-Stage Air Conditioner w/ High/Low Pressure-208/230/1/60
RA1424BJ1NA	*Classic*® Series 2 ton 14 SEER Single-Stage Air Conditioner-208/230/1/60
RA1424BJ1NB	*Classic*® Series 2 ton 14 SEER Single-Stage Air Conditioner w/ High/Low Pressure-208/230/1/60
RA1430AJ1NA	*Classic*® Series 2 1/2 ton 14 SEER Single-Stage Air Conditioner-208/230/1/60
RA1430AJ1NB	*Classic*® Series 2 1/2 ton 14 SEER Single-Stage Air Conditioner w/ High/Low Pressure-208/230/1/60
RA1436AC1NB	*Classic*® Series 3 ton 14 SEER Single-Stage Air Conditioner w/ High/Low Pressure-208/230/1/60
RA1436AD1NB	*Classic*® Series 3 ton 14 SEER Single-Stage Air Conditioner w/ High/Low Pressure-460/3/60
RA1436AJ1NA	*Classic*® Series 3 ton 14 SEER Single-Stage Air Conditioner-208/230/1/60
RA1436AJ1NB	*Classic*® Series 3 ton 14 SEER Single-Stage Air Conditioner w/ High/Low Pressure-208/230/1/60
RA1442AD1NB	*Classic*® Series 3 1/2 ton 14 SEER Single-Stage Air Conditioner w/ High/Low Pressure-460/3/60
RA1442CC1NB	*Classic*® Series 3 1/2 ton 14 SEER Single-Stage Air Conditioner w/ High/Low Pressure-208/230/1/60
RA1442CJ1NA	*Classic*® Series 3 1/2 ton 14 SEER Single-Stage Air Conditioner-208/230/1/60
RA1442CJ1NB	*Classic*® Series 3 1/2 ton 14 SEER Single-Stage Air Conditioner w/ High/Low Pressure-208/230/1/60
RA1448AC1NB	*Classic*® Series 4 ton 14 SEER Single-Stage Air Conditioner w/ High/Low Pressure-208/230/1/60
RA1448AD1NB	*Classic*® Series 4 ton 14 SEER Single-Stage Air Conditioner w/ High/Low Pressure-460/3/60
RA1448AJ1NA	*Classic*® Series 4 ton 14 SEER Single-Stage Air Conditioner-208/230/1/60
RA1448AJ1NB	*Classic*® Series 4 ton 14 SEER Single-Stage Air Conditioner w/ High/Low Pressure-208/230/1/60
RA1460AD1NB	*Classic*® Series 5 ton 14 SEER Single-Stage Air Conditioner w/ High/Low Pressure-460/3/60
RA1460BC1NB	*Classic*® Series 5 ton 14 SEER Single-Stage Air Conditioner w/ High/Low Pressure-208/230/1/60
RA1460BJ1NA	*Classic*® Series 5 ton 14 SEER Single-Stage Air Conditioner-208/230/1/60
RA1460BJ1NB	*Classic*® Series 5 ton 14 SEER Single-Stage Air Conditioner w/ High/Low Pressure-208/230/1/60
RA1460CC1NB	*Classic*® Series 5 ton 14 SEER Single-Stage Air Conditioner w/ High/Low Pressure-208/230/1/60
RA1460CD1NB	*Classic*® Series 5 ton 14 SEER Single-Stage Air Conditioner w/ High/Low Pressure-460/3/60
RA1460CJ1NA	*Classic*® Series 5 ton 14 SEER Single-Stage Air Conditioner-208/230/1/60
RA1460CJ1NB	*Classic*® Series 5 ton 14 SEER Single-Stage Air Conditioner w/ High/Low Pressure-208/230/1/60

Introduction to RA14 Air Conditioner

The RA14 is our 14 SEER air conditioner and is part of the Rheem air conditioner product line that extends from 13 to 20 SEER. This highly featured and reliable air conditioner is designed for years of reliable, efficient operation when matched with Rheem indoor aluminum evaporator coils and furnaces or air handler units with aluminum evaporators.

Our unique composite base (1) reduces sound emission, eliminates rattles, significantly reduces fasteners, eliminates corrosion and has integrated brass compressor attachment inserts (2). Furthermore it has incorporated into the design, water management features, means for hand placement (3) for unit maneuvering, screw trays (4) and inserts for lifting off unit pad. (5)

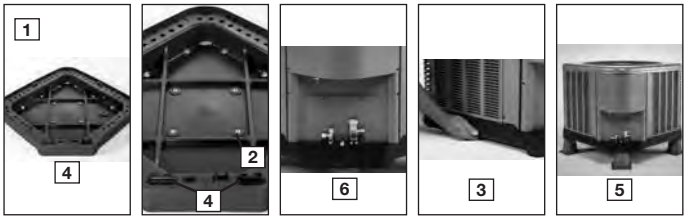

Service Valves (6) are rigidly mounted in the composite base with 3" between suction and discharge valves, 4" clearance below service valves and a minimum of 5" above the service valves, creating industry leading installation ease. The minimum 27 square-inches around the service valves allows ample room to remove service valve schrader prior to brazing, plenty of clearance for easy brazing of the suction and discharge lines to service valve outlets, easy access and hookup of low loss refrigerant gauges (7), and access to the service valve caps for opening. For applications with long-line lengths up to 250 feet total equivalent length, up to 200 feet condenser above evaporator, or up to 80 feet evaporator above condenser, the long-line instructions in the installation manual should be followed.

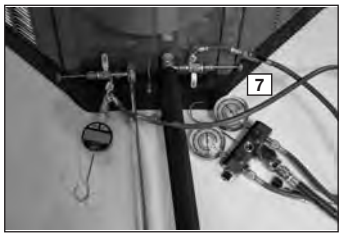

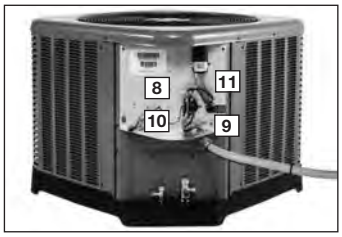

Controls are accessed from the corner of the unit by removing only two fasteners from the control access cover, revealing the industry's largest 15" wide and 14" tall control area (8). With all this room in the control area the high voltage electrical whip (9) can easily be inserted through the right size opening in the bottom of the control area. Routing it leads directly to contractor lugs for connection. The low voltage control wires (10) are easily connected to units low voltage wiring. If contactor or capacitor (11) needs to be replaced there is more than adequate space to make the repair. Furthermore, if high pressure and low pressure model was not purchased but is desired to be installed in the field, the service window (12) can be removed by removing two screws, to access the high and low side schrader fittings for easy field installation. The entire corner can be removed providing ultimate access to install the high and low pressure switch. (13)

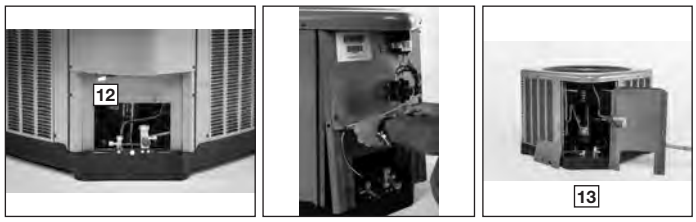

If in the rare event, greater access is needed to internal components, such as the compressor, the entire corner of the unit can be removed along with the top cover assembly to have unprecedented access to interior of the unit (14). Extra wire length is incorporated into each outdoor fan and compressor so top cover and control panel can be positioned next to the unit. With minimal effort the plug can be removed from the compressor and the outdoor fan wires can be removed from the capacitor to allow even more uncluttered access to the interior of the unit (15). Outdoor coil heights range from as short as 22" to 32", aiding access to the compressor. Disassembly to this degree and complete reassembly only takes a first time service technician less than 10 minutes. (15)

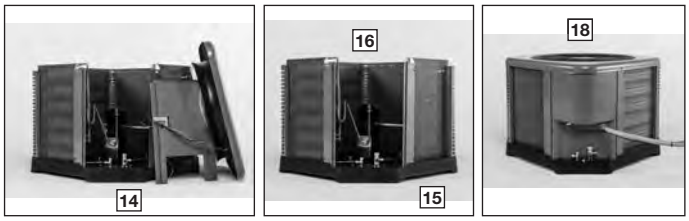

All units utilize strong formed louver panels which provide industry leading coil protection. Louver removal for coil cleaning is accomplished by removing one screw and lifting the panel out of the composite base pan. (17) All RA14 units utilize single row coils (16) making cleaning easy and complete, restoring the performance of the air conditioner back to out of the box performance levels year after year.

The outdoor fan motor has sleeve bearings and is inherently protected. The motor is totally enclosed for maximum protection from weather, dust and corrosion. Access to the outdoor fan is made by removing four fasteners from the fan grille. The outdoor fan can be removed from the fan grille by removing 4 fasteners in the rare case outdoor fan motor fails.

Each cabinet has optimized composite (19) fan orifice assuring efficient and quiet airflow.

The entire cabinet has powder post paint (20) achieving 1000 hour salt spray rating, allowing the cabinet to retain its aesthetics throughout its life.

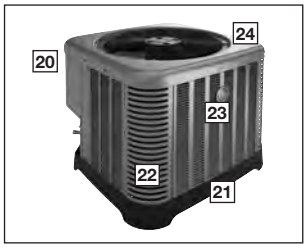

Scroll compressors with standard internal pressure relief and internal thermal overload are used on all capacities assuring longevity of high efficient and quiet operation for the life of the product.

Each unit is shipped with filter drier for field installation and will trap any moisture or dirt that could contaminate the refrigerant system.

All cabinets have industry leading structural strength due to the composite base pan (21), interlocking corner post (22), formed curved louver panels (23) and drawn top cover (24) making it the most durable cabinet on the market today.

Each RA14 capacity has undergone rigorous psychometric testing to assure performance ratings of capacity, SEER and EER per AHRI Standard 210/240 rating conditions. Also each unit bears the UL mark and each unit is certified to UL 1995 safety standards.

Each unit has undergone specific strain and modal testing to assure tubing (25) is outside the units natural frequency and that the suction and discharge lines connected to the compressor withstand any starting, steady state operation or shut down forces imposed by the compressor.

All units have been sound tested in sound chamber to AHRI 270 rating conditions, and A-weighted Sound Power Level tables produced, assuring units have acceptable noise qualities (see page 9). Each unit has been ran in cooling operation at 95°F and 82°F and sound ratings for the RA14 range from as low as 74 dBA to 77 dBA.

All units have been ship tested to assure units meet stringent “over the road” shipping conditions.

As manufactured all units in the RA14 family have cooling capability to 55 °F. Addition of low ambient control will allow the unit to operate down to 0°F. Factory testing is performed on each unit. All component parts meet well defined specification and continually go through receiving inspections. Each component installed on a unit is scanned, assuring correct component utilization for a given unit capacity and voltage. All condenser coils are leak tested with pressurization test to 550#’s and once installed and assembled, each units’ complete refrigerant system is helium leak tested. All units are fully charged from the factory for up to 15 feet of piping. All units are factory run tested. The RA14 has a 10-year conditional compressor and parts warranty (registration required).

Optional Accessories
(Refer to accessory chart for model #)

Compressor Crankcase Heater
Protects against refrigerant migration that can occur during low ambient operation

Compressor Sound Cover
- Reinforced vinyl compressor cover containing a 1½ inch thick batt of fiberglass insulation
- Open edges are sealed with a one-inch wide hook and loop fastening tape

Compressor Hard Start Kit
- Single-phase units are equipped with a PSC compressor motor, this type of motor normally does not need a potential relay and start capacitor
- Kit may be required to increase the compressor starting torque, in conditions such as low voltage

Low Ambient Kit
- Air conditioners operate satisfactorily in the cooling mode down to 55°F outdoor air temperature without any additional controls
- This Kit can be added in the field enabling unit to operate properly down to 0° in the cooling mode
- Crankcase heater and freezestat should be installed on compressors equipped with a low ambient kit

3"/6"/12"
- Gray high density polyethylene feet are available to raise unit off of mounting surface away from moisture

Low Pressure
- Can be added in field enabling the unit to shut off compressor on loss of charge

NOTE: Unit can be purchased with high and low pressure installed at factory. (Refer to SKU list)

High Pressure
- Can be added in field enabling unit to shut off compressor if unit loses outdoor fan operation.

NOTE: Unit can be purchased with high and low pressure installed at factory. (Refer to SKU list)

Decorative Top
- Can be installed on fan grille

Air Conditioners*

R	A	14	24	A	J	1	N	A	*
Brand	**Product Category**	**SEER**	**Capacity BTU/HR**	**Major Series***	**Voltage**	**Type**	**Controls**	**Minor Series****	**Option Code**
Rheem	A - Air Conditioners	14 - 14 SEER	18 - 18,000 [5.28 kW] 24 - 24,000 [7.03 kW] 30 - 30,000 [8.79 kW] 36 - 36,000 [10.55 kW] 42 - 42,000 [12.31 kW] 48 - 48,000 [14.07 kW] 60 - 60,000 [17.58 kW]	A - 1st Design B - 2nd Design	J - 1ph, 208-230/60 C - 3ph, 208-230/60 D - 3ph, 460/60	1 - Single-stage	N - Non-Communicating	A - 1st Design B - 2nd Design	N/A

*See page 3 for available SKU's.

Heat Pumps (For Reference)**

R	P	14	24	A	J	1	N	A	*
Brand	**Product Category**	**SEER**	**Capacity BTU/HR**	**Major Series***	**Voltage**	**Type**	**Controls**	**Minor Series****	**Option Code**
Rheem	P - Heat Pump	13 - 13 SEER 14 - 14 SEER 16 - 16 SEER 17 - 17 SEER 20 - 20 SEER	18 - 18,000 [5.28 kW] 24 - 24,000 [7.03 kW] 30 - 30,000 [8.79 kW] 36 - 36,000 [10.55 kW] 42 - 42,000 [12.31 kW] 48 - 48,000 [14.07 kW] 60 - 60,000 [17.58 kW]	A - 1st Design	J - 1ph, 208-230/60 C - 3ph, 208-230/60 D - 3ph, 460/60	1 - Single-stage 2 - Two-stage V - Inverter P - Piston	C - Communicating N - Non-Communicating	A - 1st Design	N/A

Furnace Coils (For Reference)**

R	C	F	24	17	S	T	A	M	C	A	*
Brand	**Product Category**	**Type**	**Capacity BTU/HR**	**Width**	**Efficiency**	**Metering Device**	**Major Series***	**Orientation**	**Casing**	**Minor Series****	**Option Code**
Rheem	C - Evap Coil	F - Furn Coil H - Air-Handler Coil	24 - 24,000 [7.03 kW] 36 - 36,000 [10.55 kW] 48 - 48,000 [14.07 kW] 60 - 60,000 [17.58 kW]	14 - 14" 17 - 17.5" 21 - 21" 24 - 24.5"	S- Standard Eff. M- Mid Eff. H- High Eff.	T-TXV E-EEV P-Piston	A - 1st Design	M - Multipoise V - Vertical only/ convertible H - Ded. Horizontal only	C - Cased U - Uncased	A - 1st Design	N/A

**Model number ID's are for reference only. Available SKU's are listed on the standard features/available SKU page of model spec sheets.

[ ] Designates Metric Conversions

90%+ AFUE Gas Furnaces (For Reference)**

R	96	V	A	70	2	3	17	M	S	A
Brand	**Series**	**Motor**	**Major Rev**	**Input BTU/HR**	**Stages**	**Air Flow**	**Cabinet Width**	**Configuration**	**Nox**	**Minor Rev**
Rheem	90 - 90 AFUE 92 - 92 AFUE 95 - 95 AFUE 96 - 96 AFUE 97 - 97 AFUE	V - Variable speed T - Constant Torque (X-13) P - PSC	A - 1st Design	040 - 42,000 [12.31 kW] 060 - 56,000 [16.41 kW] 070 - 70,000 [20.51 kW] 085 - 84,000 [24.62 kW] 100 - 98,000 [28.72 kW] 115 - 112,000 [32.82 kW]	1 - Single-stage 2 - Two-stage M - Modulating	3 - up to 3 ton 5 - 3 1/2 up to 5 ton	14 - 14" 17 - 17.5" 21 - 21" 24 - 24.5"	M - Multi	X - Low Nox S - Standard	A - 1st Design

80% AFUE Gas Furnaces (For Reference)**

R	80	2	V	A	075	3	17	M	S	A
Brand	**Series**	**Stages**	**Motor**	**Major Rev**	**Input BTU/HR**	**Air Flow**	**Cabinet Width**	**Configuration**	**Nox**	**Minor Rev**
Rheem	80 - 80+ AFUE	1 - Single-stage 2 - Two-stage	V - Variable speed T - Constant Torque (X-13) P - PSC premium S - PSC standard	A - 1st Design	050 - 50,000 [15 kW] 075 - 75,000 [22 kW] 100 - 100,000 [29 kW] 125 - 125,000 [37 kW] 150 - 150,000 [44 kW]	3 - up to 3 ton 4 - 2 1/2 to 4 ton 5 - 3 1/2 up to 5 ton	14 - 14" 17 - 17.5" 21 - 21" 24 - 24.5"	M - Multi D - Down Z - Down & zero clearance down flow	X - Low Nox S - Standard	A - 1st Design

Air Handlers (For Reference)**

R	H	1	T	36	17	S	T	A	N	A	A	000	*
Brand	**Product Category**	**Stages of Airflow**	**Motor Type**	**Capacity BTU/HR**	**Width**	**Coil Size**	**Metering Device**	**Major Series***	**Controls**	**Voltage**	**Minor Series****	**Factory Heat Cap**	**Option Code**
Rheem	H - Air Handler	1 - Single-Stage 2 - Two-Stage M - Modulating	V - Variable Speed T - Constant Torque P - PSC	24 - 24,000 [7.03 kW] 36 - 36,000 [10.55 kW] 48 - 48,000 [14.07 kW] 60 - 60,000 [17.58 kW]	14 - 14" 17 - 17.5" 21 - 21" 24 - 24.5"	S - Standard Eff. M - Mid Eff. H - High Eff.	T - TEV E - EEV P - Piston	A - 1st Design	C - Communicating N - Non-comm	A - 1ph, 115/60 J - 1ph, 208-240/60 D - 3ph, 480/60	A - 1st Design	00 - no factory heat with option code	*TBD

**Model number ID's are for reference only. Available SKU's are listed on the standard features/available SKU page of model spec sheets.

[ ] Designates Metric Conversions

Physical Data

PHYSICAL DATA							
Model No.	**RA1418**	**RA1424**	**RA1430**	**RA1436**	**RA1442**	**RA1448**	**RA1460**
Nominal Tonnage	1.5	2.0	2.5	3.0	3.5	4.0	5.0
Valve Connections							
Liquid Line O.D. – in.	3/8	3/8	3/8	3/8	3/8	3/8	3/8
Suction Line O.D. – in.	3/4	3/4	3/4	3/4	7/8	7/8	7/8
Refrigerant (R410A) furnished oz.[1]	68	80	87	106	134	129	201
Compressor Type	Scroll						
Outdoor Coil							
Net face area – Outer Coil	9.1	11.1	12.1	14.8	17.3	18.9	32.3
Net face area – Inner Coil	—	—	—	—	—	—	—
Tube diameter – in.	3/8	3/8	3/8	3/8	3/8	3/8	3/8
Number of rows	1	1	1	1	1	1	1
Fins per inch	22	22	22	22	22	22	22
Outdoor Fan							
Diameter – in.	20	20	20	24	24	26	26
Number of blades	2	2	2	3	3	2	3
Motor hp	1/10	1/8	1/8	1/6	1/5	1/5	1/3
CFM	2225	2295	2605	3105	4105	4264	4775
RPM	1075	1121	1075	850	833	820	795
watts	130	138	142	173	236	236	239
Shipping weight – lbs.	143	148	158	178	207	232	247
Operating weight – lbs.	122	141	151	171	200	221	240

Electrical Data

Line Voltage Data (Volts-Phase-Hz)	**208/230-1-60**	**208/230-1-60**	**208/230-1-60**	**208/230-1-60**	**208/230-1-60**	**208/230-1-60**	**208/230-1-60**
Maximum overcurrent protection (amps)[2]	20	25	25	30	35	45	50
Minimum circuit ampacity[3]	13	15	17	19	23	27	34
Compressor							
Rated load amps	9.7	10.9	12.8	14.1	16.7	19.9	23.7
Locked rotor amps	48	62.9	64	77	109	109	152.5
Condenser Fan Motor							
Full load amps	0.6	0.8	0.8	0.8	1.2	1.2	3.5
Locked rotor amps	1.1	1.5	1.4	1.5	2.0	2.3	-
Line Voltage Data (Volts-Phase-Hz)	—	—	—	**208/230-3-60**	**208/230-3-61**	**208/230-3-62**	**208/230-3-63**
Maximum overcurrent protection (amps)[2]	—	—	—	20	25	30	35
Minimum circuit ampacity[3]	—	—	—	13	16	18	24
Compressor							
Rated load amps	—	—	—	9	11.2	13.1	15.9
Locked rotor amps	—	—	—	71	84	83.1	110
Condenser Fan Motor							
Full load amps	—	—	—	0.8	1.2	1.2	3.5
Locked rotor amps	—	—	—	1.5	3.0	2.3	-
Line Voltage Data (Volts-Phase-Hz)	—	—	—	**480-3-60**	**480-3-60 RA1442AD**	**480-3-60**	**480-3-60 RA1460AD**
Maximum overcurrent protection (amps)[2]	—	—	—	15	—	15	15
[3]Minimum circuit ampacity	—	—	—	8	—	9	10
Compressor							
Rated load amps	—	—	—	5.6	—	6.1	7.1
Locked rotor amps	—	—	—	38	—	41	52
Condenser Fan Motor							
Full load amps	—	—	—	0.5	—	0.6	0.5
Locked rotor amps	—	—	—	1.1	—	1.6	1.4

[1]Refrigerant charge sufficient for 15 ft. length of refrigerant lines. For longer line set requirements see the installation instructions for information about set length and additional refrigerant charge required.
[2]HACR type circuit breaker of fuse.
[3]Refer to National Electrical Code manual to determine wire, fuse and disconnect size requirements.

Accessories

Model No.		RA1418	RA1424	RA1430	RA1436	RA1442	RA1448	RA1460
Compressor crankcase heater*		44-17402-44	44-17402-44	44-17402-44	44-17402-44	44-17402-45	44-17402-45	44-17402-45
Low ambient control		RXAD-A08	RXAD-A08	RXAD-A08	RXAD-A08	RXAD-A08	RXAD-A08	RXAD-A08
Compressor sound cover		68-23427-26	68-23427-26	68-23427-26	68-23427-26	68-23427-25	68-23427-25	68-23427-25
Compressor hard start kit		SK-A1	SK-A1	SK-A1	SK-A1	SK-A1	SK-A1	SK-A1
Compressor time delay		RXMD-B01	RXMD-B01	RXMD-B01	RXMD-B01	RXMD-B01	RXMD-B01	RXMD-B01
Low pressure control		RXAC-A07	RXAC-A07	RXAC-A07	RXAC-A07	RXAC-A07	RXAC-A07	RXAC-A07
High pressure control		RXAB-A07	RXAB-A07	RXAB-A07	RXAB-A07	RXAB-A07	RXAB-A07	RXAB-A07
Liquid Line Solenoid (24 VAC, 50/60 Hz)	Solenoid Valve	200RD2T3TVLC	200RD2T3TVLC	200RD2T3TVLC	200RD2T3TVLC	200RD2T3TVLC	200RD3T3TVLC	200RD3T3TVLC
	Solenoid Coil	61-AMG24V	61-AMG24V	61-AMG24V	61-AMG24V	61-AMG24V	61-AMG24V	61-AMG24V
Liquid Line Solenoid (120/240 VAC, 50/60 Hz)	Solenoid Valve	200RD2T3TVLC	200RD2T3TVLC	200RD2T3TVLC	200RD2T3TVLC	200RD2T3TVLC	200RD3T3TVLC	200RD3T3TVLC
	Solenoid Coil	61-AMG120/240V	61-AMG120/240V	61-AMG120/240V	61-AMG120/240V	61-AMG120/240V	61-AMG120/240V	61-AMG120/240V
Classic Top Cap w/Label		91-101123-21	91-101123-21	91-101123-21	91-101123-21	91-101123-21	91-101123-21	91-101123-21

*Crankcase Heater recommended with Low Ambient Kit.

Weighted Sound Power Level (dBA)

A-WEIGHTED SOUND POWER LEVEL (dBA)								
Unit Size - Voltage, Series	Standard Rating (dBA)	TYPICAL OCTAVE BAND SPECTRUM (dBA without tone adjustment)						
		125	250	500	1000	2000	4000	8000
RA1418	76.0	51.4	59.6	65.2	65.9	64.3	58.5	53.7
RA1424	75.0	50.0	59.5	63.2	64.4	61.4	56.8	52.6
RA1430	74.0	48.8	57.5	63.5	64	61.9	56.1	51
RA1436	76.0	52.2	61.3	65.4	65.3	62.4	57.3	53.1
RA1442	73.0	51.5	54.7	63.5	63.3	59.4	54.9	48.4
RA1448	76.0	52.3	59.1	66.7	65.7	62.4	59.3	55.9
RA1460	74.6	50.1	55.1	65.6	64.8	63.2	57.4	56.4

NOTE: Tested in accordance with AHRI Standard 270-08 (not listed in AHRI)

Unit Dimensions

MODEL NO.	OPERATING						SHIPPING					
	H (Height)		L (Length)		W (Width)		H (Height)		L (Length)		W (Width)	
	INCHES	mm	INCHES	mm	INCHES	mm	INCHES	mm	INCHES	mm	INCHES	mm
RA1418	25	635	29.75	755	29.75	755	26.75	679	32.38	822	32.38	822
RA1424	25	635	29.75	755	29.75	755	26.75	679	32.38	822	32.38	822
RA1430	27	685	29.75	755	29.75	755	28.75	730	32.38	822	32.38	822
RA1436	27	685	33.75	857	33.75	857	28.75	730	36.38	924	36.38	924
RA1442	35	889	33.75	857	33.75	857	36.75	933	36.38	924	36.38	924
RA1448	31	787	35.75	908	35.75	908	32.75	832	38.38	975	38.38	975
RA1460	51	1295	35.75	908	35.75	908	51.38	1305	38.38	975	38.38	975

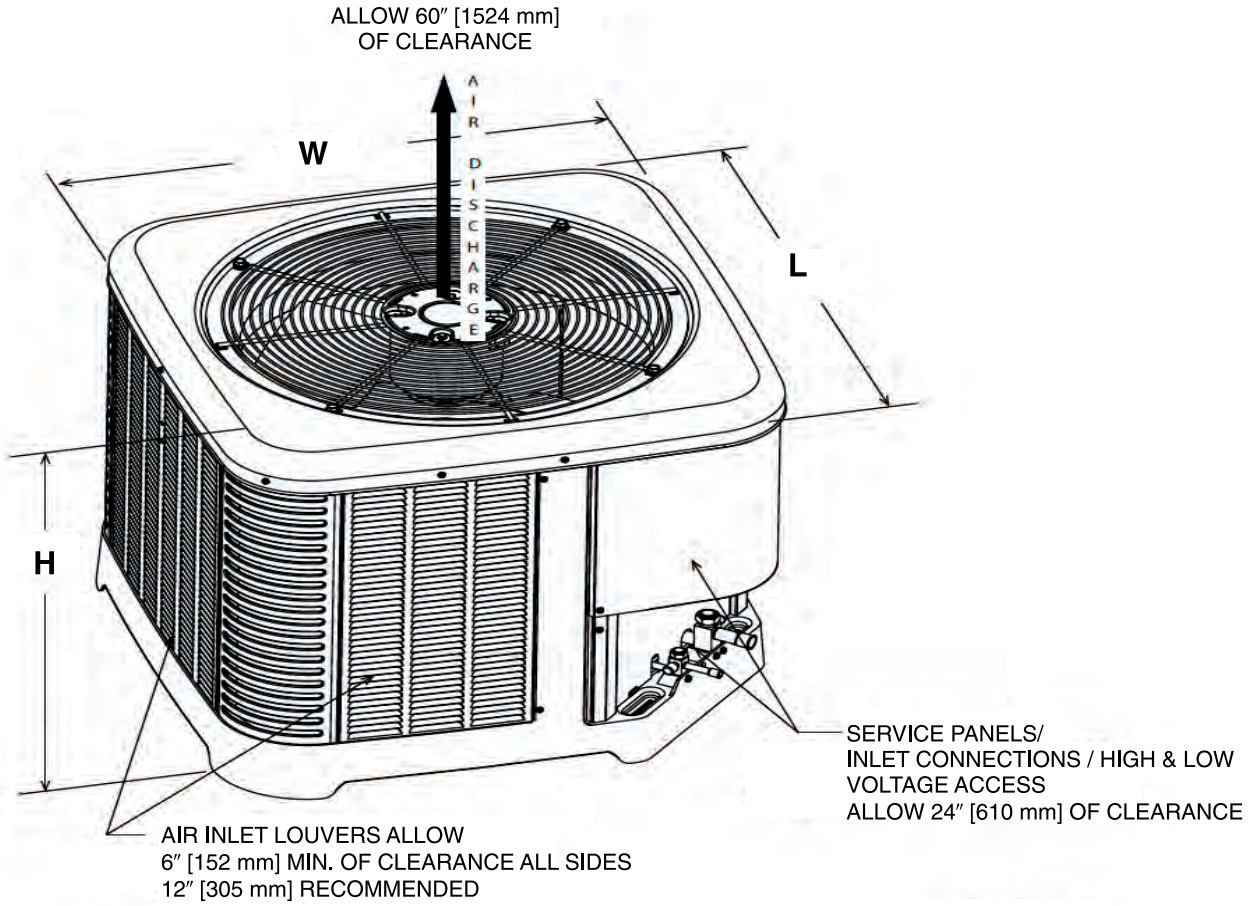

[ ] Designates Metric Conversions

ST-A1226-02-00

CLEARANCES

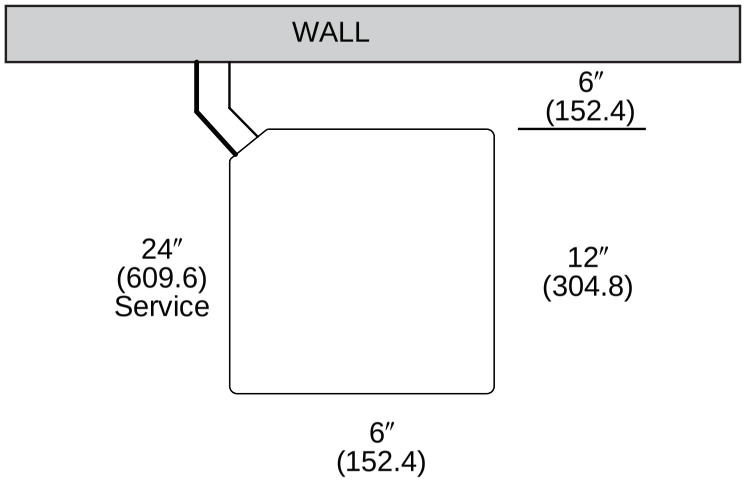

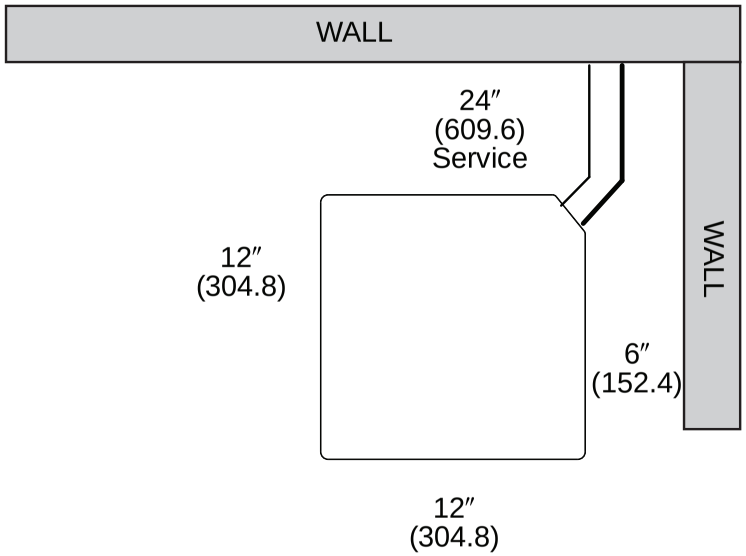

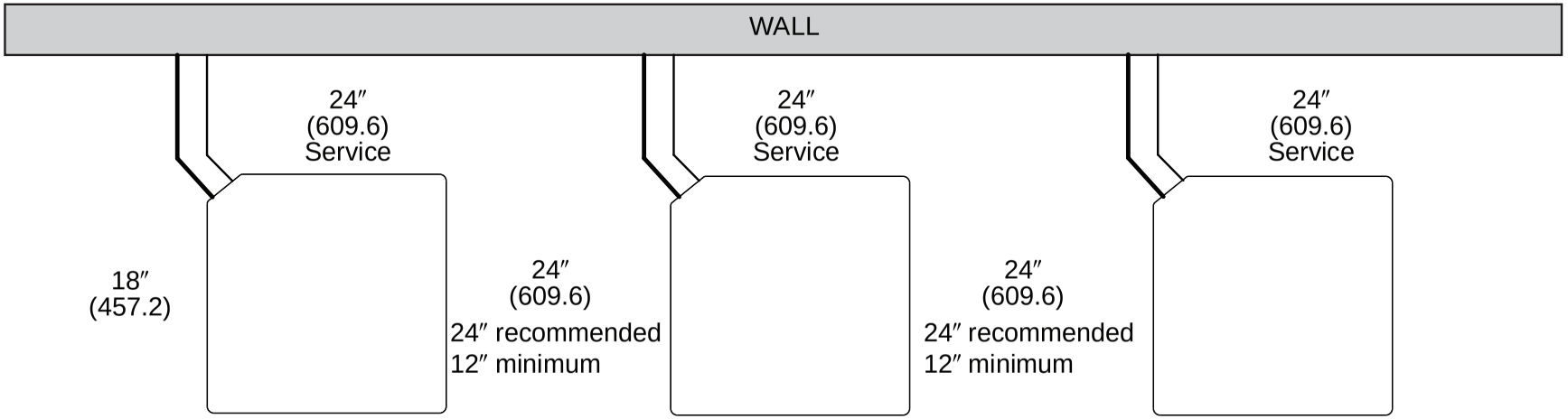

NOTE: NUMBERS IN () = mm

IMPORTANT: When installing multiple units in an alcove, roof well or partially enclosed area, ensure there is adequate ventillation to prevent re-circulation of discharge air.

ST-A1225-01-00

Control Wiring

FIGURE 2
CONTROL WIRING FOR GAS OR OIL FURNACE

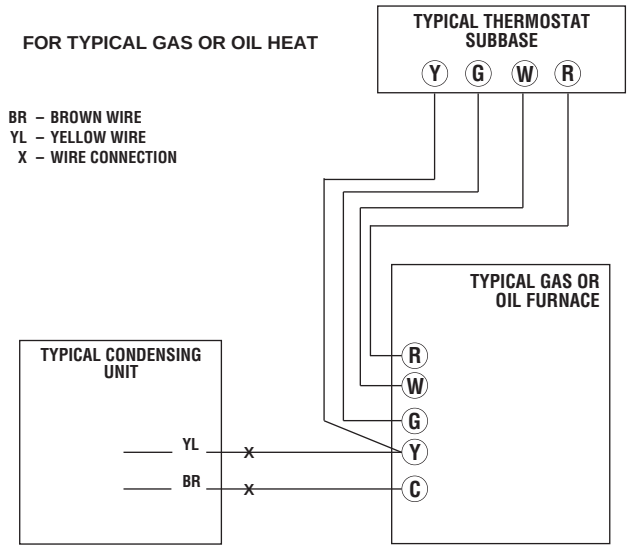

*IF MAXIMUM OUTLET TEMPERATURE RISE IS DESIRED, IT IS RECOMMENDED THAT W1 (W/BK) AND W2 (W/BL) BE JUMPERED TOGETHER.

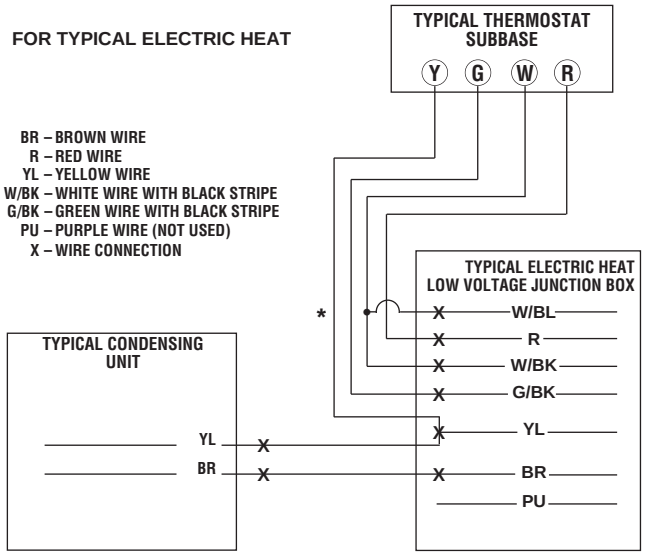

Application Guidelines

1. Intended for outdoor installation with free air inlet and outlet. Outdoor fan external static pressure available is less than 0.01 -in. wc.
2. Minimum outdoor operation air temperature for cooling mode without low-ambient operation accessory is 55°F (12.8°C).
3. Maximum outdoor operating air temperature is 125°F (51.7°C).
4. For reliable operation, unit should be level in all horizontal planes.
5. Use only copper wire for electric connections at unit. Aluminum and clad aluminum are not acceptable for the type of connector provided.
6. Do not apply capillary tube indoor coils to these units.
7. Factory – supplied filter drier must be installed.

Refrigerant Line Size Information

13 - 16 SEER Single-Stage Air-Conditioners																	
Unit Size	Allowable Liquid Line Size	Allowable Suction Line Size	Apply Long Line Guidelines if Linear Line Length Exceeds Those Shown Below (Feet)				Equivalent Length (Feet)									
							< 25	26-50	51-75	76-100	101-125	126-150	151-175	176-200	201-225	226-250
			(-)A13	(-)A14 A/B	(-)A14 W	(-)A16	Maximum Vertical Rise (Outdoor Unit Below Indoor Unit) * / Capacity Multiplier									
1.5 Ton **SEE NOTE 3	1/4"	5/8"	N/R	N/R	N/R	N/R	25 / 1.00	50 / 0.99	62 / 0.98	43 / 0.98	24 / 0.97	5 / 0.97	N/R	N/R	N/R	N/R
	5/16"	5/8"	N/R	223	198	188	25 / 1.00	50 / 0.99	75 / 0.98	98 / 0.98	93 / 0.97	88 / 0.97	83 / 0.96	78 / 0.96	73 / 0.95	68 / 0.94
	3/8"	5/8"	178	148	132	125	25 / 1.00	50 / 0.99	75 / 0.98	100 / 0.98	100 / 0.97	100 / 0.97	100 / 0.96	100 / 0.96	100 / 0.95	100 / 0.94
	1/4"	3/4"**	N/R	N/R	N/R	N/R	25 / 1.00	50 / 1.00	62 / 0.99	43 / 0.99	24 / 0.99	5 / 0.99	N/R	N/R	N/R	N/R
	5/16"	3/4"**	N/R	223	198	188	25 / 1.00	50 / 1.00	75 / 0.99	98 / 0.99	93 / 0.99	88 / 0.99	83 / 0.99	78 / 0.98	73 / 0.98	68 / 0.98
	3/8"	3/4"**	178	148	132	125	25 / 1.00	50 / 1.00	75 / 1.00	100 / 0.99	100 / 0.99	100 / 0.99	100 / 0.99	100 / 0.98	100 / 0.98	100 / 0.98
2 Ton	1/4"	5/8"	N/R	N/R	N/R	N/R	25 / 0.99	50 / 0.98	21 / 0.97	N/R	N/R	N/R	N/R	N/R	N/R	N/R
	5/16"	5/8"	243	193	175	175	25 / 0.99	50 / 0.98	75 / 0.97	87 / 0.96	77 / 0.95	69 / 0.94	61 / 0.93	53 / 0.92	45 / 0.91	37 / 0.90
	3/8"	5/8"	162	128	117	117	25 / 0.99	50 / 0.98	75 / 0.97	100 / 0.96	100 / 0.95	100 / 0.94	98 / 0.93	95 / 0.92	92 / 0.91	89 / 0.90
	1/4"	3/4"	N/R	N/R	N/R	N/R	25 /1.00	50 / 1.00	21 / 0.99	N/R	N/R	N/R	N/R	N/R	N/R	N/R
	5/16"	3/4"	243	193	175	175	25 /1.00	50 / 1.00	75 / 0.99	87 / 0.99	77 / 0.98	69 / 0.98	61 / 0.98	53 / 0.97	45 / 0.97	37 / 0.96
	3/8"	3/4"	162	128	117	117	25 / 1.00	50 / 1.00	75 / 0.99	100 / 0.99	100 / 0.98	100 / 0.98	98 / 0.98	95 / 0.97	93 / 0.97	90 / 0.96
2.5 Ton	5/16"	5/8"	N/R	N/R	110	110	25 / 0.99	50 / 0.98	75 / 0.96	70 / 0.94	59 / 0.93	48 / 0.91	36 / 0.90	N/R	N/R	N/R
	3/8"	5/8"	142	117	73	73	25 / 0.99	50 / 0.98	75 / 0.96	100 / 0.94	98 / 0.93	94 / 0.91	90 / 0.90	N/R	N/R	N/R
	5/16"	3/4"	213	175	110	110	25 / 1.00	50 / 0.99	75 / 0.99	70 / 0.98	59 / 0.98	48 / 0.97	36 / 0.96	25 / 0.96	13 / 0.95	N/R
	3/8"	3/4"	142	117	73	73	25 / 1.00	50 / 0.99	75 / 0.99	100 / 0.98	98 / 0.98	94 / 0.97	90 / 0.96	86 / 0.96	82 / 0.95	78 / 0.95
3 Ton	5/16"	5/8"	N/R	N/R	N/R	N/R	25 / 0.99	50 / 0.97	66 / 0.94	49 / 0.92	32 / 0.90	N/R	N/R	N/R	N/R	N/R
	3/8"	5/8"	108	85	90	82	25 / 0.99	50 / 0.97	75 / 0.94	95 / 0.92	89 / 0.90	N/R	N/R	N/R	N/R	N/R
	5/16"	3/4"	N/R	128	135	123	25 / 1.00	50 / 0.99	66 / 0.98	49 / 0.98	32 / 0.97	15 / 0.96	N/R	N/R	N/R	N/R
	3/8"	3/4"	108	85	90	82	25 / 1.00	50 / 0.99	75 / 0.98	95 / 0.98	89 / 0.97	84 / 0.96	78 / 0.95	72 / 0.94	67 / 0.93	61 / 0.93
	1/2"	3/4"	54	43	45	41	25 / 1.00	50 / 0.99	75 / 0.98	100 / 0.98	100 / 0.97	100 / 0.96	100 / 0.95	100 / 0.94	100 / 0.93	100 / 0.93
	5/16"	7/8"	N/R	128	135	123	25 / 1.00	50 / 1.00	66 / 1.00	49 / 0.99	32 / 0.99	15 / 0.99	N/R	N/R	N/R	N/R
	3/8"	7/8"	108	85	90	82	25 / 1.00	50 / 1.00	75 / 1.00	95 / 0.99	89 / 0.99	84 / 0.99	78 / 0.98	72 / 0.98	67 / 0.98	61 / 0.97
	1/2"	7/8"	54	43	45	41	25 / 1.00	50 / 1.00	75 / 1.00	100 / 0.99	100 / 0.99	100 / 0.99	100 / 0.98	100 / 0.98	100 / 0.98	100 / 0.97
3.5 Ton	3/8"	3/4"	150	102	75	75	25 / 0.99	50 / 0.98	75 / 0.97	88 / 0.96	80 / 0.95	72 / 0.94	65 / 0.92	57 / 0.91	49 / 0.90	N/R
	1/2"	3/4"	75	51	38	38	25 / 0.99	50 / 0.98	75 / 0.97	100 / 0.96	100 / 0.95	100 / 0.94	100 / 0.92	100 / 0.91	100 / 0.90	N/R
	3/8"	7/8"	150	102	75	75	25 / 1.00	50 / 1.00	75 / 0.99	88 / 0.99	80 / 0.99	72 / 0.98	65 / 0.97	57 / 0.97	49 / 0.96	42 / 0.96
	1/2"	7/8"	75	51	38	38	25 / 1.00	50 / 1.00	75 / 0.99	100 / 0.99	100 / 0.99	100 / 0.98	100 / 0.97	100 / 0.97	100 / 0.96	100 / 0.96

NOTES:
1. Do not exceed 200 ft linear line length.
2. *Do not exceed 100 ft vertical separation if outdoor unit is above indoor unit.
3. **3/4" suction line should only be used for 1.5 ton systems if outdoor unit is below or at same level as indoor to assure proper oil return.
4. Always use the smallest liquid line allowable to minimize refrigerant charge.
5. Applications shaded in light gray indicate capacity multipliers between 0.90 and 0.96 which are not recommended, but are allowed.
6. Applications shaded in dark gray are not recommended due to excessive liquid or suction pressure drop.

NOTE: Values based on 105°F liquid temperature and 45°F evaporator temperature in cooling mode depending on size

Refrigerant Line Size Information (con't.)

13 - 16 SEER Single-Stage Air-Conditioners																	
Unit Size	Allowable Liquid Line Size	Allowable Suction Line Size	Apply Long Line Guidelines if Linear Line Length Exceeds Those Shown Below (Feet)				Equivalent Length (Feet)									
							< 25	26-50	51-75	76-100	101-125	126-150	151-175	176-200	201-225	226-250
			(-)A13	(-)A14 A/B	(-)A14 W	(-)A16	Maximum Vertical Rise (Outdoor Unit Below Indoor Unit) * / Capacity Multiplier									
4 Ton	3/8"	3/4"	148	110	N/R	35	25 / 0.99	50 / 0.98	75 / 0.96	77 / 0.95	67 / 0.93	57 / 0.92	46 / 0.91	N/R	N/R	N/R
	1/2"	3/4"	74	55	N/R	18	25 / 0.99	50 / 0.98	75 / 0.96	100 / 0.95	100 / 0.93	100 / 0.92	100 / 0.91	N/R	N/R	N/R
	3/8"	7/8"	148	110	N/R	35	25 / 1.00	50 / 0.99	75 / 0.99	77 / 0.98	67 / 0.97	57 / 0.97	46 / 0.96	36 / 0.96	26 / 0.95	15 / 0.95
	1/2"	7/8"	74	55	N/R	18	25 / 1.00	50 / 0.99	75 / 0.99	100 / 0.98	100 / 0.97	100 / 0.97	100 / 0.96	100 / 0.96	99 / 0.95	97 / 0.95
5 Ton	3/8"	3/4"	78	0	N/R	0	25 / 0.99	50 / 0.97	75 / 0.94	61 / 0.92	46 / 0.90	N/R	N/R	N/R	N/R	N/R
	1/2"	3/4"	39	0	N/R	0	25 / 0.99	50 / 0.97	75 / 0.94	100 / 0.92	100 / 0.90	N/R	N/R	N/R	N/R	N/R
	3/8"	7/8"	78	0	N/R	0	25 / 1.00	50 / 0.99	75 / 0.98	61 / 0.97	46 / 0.96	32 / 0.95	18 / 0.94	N/R	N/R	N/R
	1/2"	7/8"	39	0	N/R	0	25 / 1.00	50 / 0.99	75 / 0.98	100 / 0.97	100 /0.96	100 / 0.95	97 / 0.94	95 / 0.94	92 / 0.93	89 / 0.92
	3/8"	1-1/8"	78	0	N/R	0	25 / 1.01	50 / 1.01	75 / 1.00	61 / 1.00	46 / 0.99	32 / 0.99	18 / 0.99	N/R	N/R	N/R
	1/2"	1-1/8"	39	0	N/R	0	25 / 1.01	50 / 1.01	75 / 1.00	100 /1.00	100 / 0.99	100 / 0.99	97 / 0.99	95 / 0.99	92 / 0.99	89 / 0.98

NOTES:
1. Do not exceed 200 ft linear line length.
2. *Do not exceed 100 ft vertical separation if outdoor unit is above indoor unit.
3. **3/4" suction line should only be used for 1.5 ton systems if outdoor unit is below or at same level as indoor to assure proper oil return.
4. Always use the smallest liquid line allowable to minimize refrigerant charge.
5. Applications shaded in light gray indicate capacity multipliers between 0.90 and 0.96 which are not recommended, but are allowed.
6. Applications shaded in dark gray are not recommended due to excessive liquid or suction pressure drop.

NOTE: Values based on 105°F liquid temperature and 45°F evaporator temperature in cooling mode depending on size

Refrigerant Line Size Information (con't.)

13 - 16 SEER Single-Stage Air-Conditioners																
Unit Size	Allowable Liquid Line Size mm [in.]	Allowable Suction Line Size mm [in.]	Apply Long Line Guidelines if Linear Line Length Exceeds Those Shown Below (Feet)				Equivalent Length (Meters)									
							< 8	8-15	16-23	24-30	31-38	39-46	47-53	54-61	62-69	70-76
			(-)A13	(-)A14 A/B	(-)A14 W	(-)A16	Maximum Vertical Rise (Outdoor Unit Below Indoor Unit) * / Capacity Multiplier									
5.3 KW [1.5 Ton] **SEE NOTE 3	6.35 [1/4]	15.88 [5/8]	N/R	N/R	N/R	N/R	8 / 1.00	15 / 0.99	19 / 0.98	13 / 0.98	7 / 0.97	2 / 0.97	N/R	N/R	N/R	N/R
	7.94 [5/16]	15.88 [5/8]	N/R	68	60	57	8 / 1.00	15 / 0.99	23 / 0.98	30 / 0.98	28 / 0.97	27 / 0.97	25 / 0.96	24 / 0.96	22 / 0.95	21 / 0.94
	9.53 [3/8]	15.88 [5/8]	54	45	40	38	8 / 1.00	15 / 0.99	23 / 0.98	30 / 0.98	30 / 0.97	30 / 0.97	30 / 0.96	30 / 0.96	30 / 0.95	30 / 0.94
	6.35 [1/4]	19.05 [3/4]**	N/R	N/R	N/R	N/R	8 / 1.00	15 / 1.00	19 / 0.99	13 / 0.99	7 / 0.99	2 / 0.99	N/R	N/R	N/R	N/R
	7.94 [5/16]	19.05 [3/4]**	N/R	68	60	57	8 / 1.00	15 / 1.00	23 / 0.99	30 / 0.99	28 / 0.99	27 / 0.99	25 / 0.99	24 / 0.98	22 / 0.98	21 / 0.98
	9.53 [3/8]	19.05 [3/4]**	54	45	40	38	8 / 1.00	15 / 1.00	23 / 0.99	30 / 0.99	30 / 0.99	30 / 0.99	30 / 0.99	30 / 0.98	30 / 0.98	30 / 0.98
7.0 KW [2 Ton]	6.35 [1/4]	15.88 [5/8]	N/R	N/R	N/R	N/R	8 / 0.99	15 / 0.98	6 / 0.97	N/R	N/R	N/R	N/R	N/R	N/R	N/R
	7.94 [5/16]	15.88 [5/8]	74	59	53	53	8 / 0.99	15 / 0.98	23 / 0.97	27 / 0.96	23 / 0.95	21 / 0.94	19 / 0.93	16 / 0.92	14 / 0.91	11 / 0.90
	9.53 [3/8]	15.88 [5/8]	49	39	36	36	8 / 0.99	15 / 0.98	23 / 0.97	30 / 0.96	30 / 0.95	30 / 0.94	30 / 0.93	29 / 0.92	28 / 0.91	27 / 0.90
	6.35 [1/4]	19.05 [3/4]	N/R	N/R	N/R	N/R	8 / 1.00	15 / 1.00	6 / 0.99	N/R	N/R	N/R	N/R	N/R	N/R	N/R
	7.94 [5/16]	19.05 [3/4]	74	59	53	53	8 / 1.00	15 / 1.00	23 / 0.99	27 / 0.99	23 / 0.98	21 / 0.98	19 / 0.98	16 / 0.97	14 / 0.97	11 / 0.96
	9.53 [3/8]	19.05 [3/4]	49	39	36	36	8 / 1.00	15 / 1.00	23 / 0.99	30 / 0.99	30 / 0.98	30 / 0.98	30 / 0.98	29 / 0.97	28 / 0.97	27 / 0.96
8.8 KW [2.5 Ton]	7.94 [5/16]	15.88 [5/8]	N/R	N/R	34	34	8 / 0.99	15 / 0.98	23 / 0.96	21 / 0.94	18 / 0.93	15 / 0.91	11 / 0.90	N/R	N/R	N/R
	9.53 [3/8]	15.88 [5/8]	43	36	22	22	8 / 0.99	15 / 0.98	23 / 0.96	30 / 0.94	30 / 0.93	29 / 0.91	27 / 0.90	N/R	N/R	N/R
	7.94 [5/16]	19.05 [3/4]	65	53	34	34	8 / 1.00	15 / 0.99	23 / 0.99	21 / 0.98	18 / 0.98	15 / 0.97	11 / 0.96	8 / 0.96	4 / 0.95	N/R
	9.53 [3/8]	19.05 [3/4]	43	36	22	22	8 / 1.00	15 / 0.99	23 / 0.99	30 / 0.98	30 / 0.98	29 / 0.97	27 / 0.96	26 / 0.96	25 / 0.95	24 / 0.95
10.6 KW [3 Ton]	7.94 [5/16]	15.88 [5/8]	N/R	N/R	N/R	N/R	8 / 0.99	15 / 0.97	20 / 0.94	15 / 0.92	10 / 0.90	N/R	N/R	N/R	N/R	N/R
	9.53 [3/8]	15.88 [5/8]	33	26	27	25	8 / 0.99	15 / 0.97	23 / 0.94	29 / 0.92	27 / 0.90	N/R	N/R	N/R	N/R	N/R
	7.94 [5/16]	19.05 [3/4]	N/R	39	41	37	8 / 1.00	15 / 0.99	20 / 0.98	15 / 0.98	10 / 0.97	5 / 0.96	N/R	N/R	N/R	N/R
	9.53 [3/8]	19.05 [3/4]	33	26	27	25	8 / 1.00	15 / 0.99	23 / 0.98	29 / 0.98	27 / 0.97	26 / 0.96	24 / 0.95	22 / 0.94	20 / 0.93	19 / 0.93
	12.70 [1/2]	19.05 [3/4]	17	13	14	12	8 / 1.00	15 / 0.99	23 / 0.98	30 / 0.98	30 / 0.97	30 / 0.96	30 / 0.95	30 / 0.94	30 / 0.93	30 / 0.93
	7.94 [5/16]	22.23 [7/8]	N/R	39	41	37	8 / 1.00	15 / 1.00	20 / 1.00	15 / 0.99	10 / 0.99	5 / 0.99	N/R	N/R	N/R	N/R
	9.53 [3/8]	22.23 [7/8]	33	26	27	25	8 / 1.00	15 / 1.00	23 / 1.00	29 / 0.99	27 / 0.99	26 / 0.99	24 / 0.98	22 / 0.98	20 / 0.98	19 / 0.97
	12.70 [1/2]	22.23 [7/8]	17	13	14	12	8 / 1.00	15 / 1.00	23 / 1.00	30 / 0.99	30 / 0.99	30 / 0.99	30 / 0.98	30 / 0.98	30 / 0.98	30 / 0.97
12.3 KW [3.5 Ton]	9.53 [3/8]	19.05 [3/4]	46	31	23	23	8 / 0.99	15 / 0.98	23 / 0.97	27 / 0.96	24 / 0.95	22 / 0.94	20 / 0.92	17 / 0.91	15 / 0.90	N/R
	12.70 [1/2]	19.05 [3/4]	23	15	11	11	8 / 0.99	15 / 0.98	23 / 0.97	30 / 0.96	30 / 0.95	30 / 0.94	30 / 0.92	30 / 0.91	30 / 0.90	N/R
	9.53 [3/8]	22.23 [7/8]	46	31	23	23	8 / 1.00	15 / 1.00	23 / 0.99	27 / 0.99	24 / 0.99	22 / 0.98	20 / 0.97	17 / 0.97	15 / 0.96	13 / 0.96
	12.70 [1/2]	22.23 [7/8]	23	15	11	11	8 / 1.00	15 / 1.00	23 / 0.99	30 / 0.99	30 / 0.99	30 / 0.98	30 / 0.97	30 / 0.97	30 / 0.96	30 / 0.96

NOTES:
1. Do not exceed 61 meters linear line length.
2. *Do not exceed 30 meters vertical separation if outdoor unit is above indoor unit.
3. **19.05 mm [3/4 in.] suction line should only be used for 1.5 ton systems if outdoor unit is below or at same level as indoor to assure proper oil return.
4. Always use the smallest liquid line allowable to minimize refrigerant charge.
5. Applications shaded in light gray indicate capacity multipliers between 0.90 and 0.96 which are not recommended, but are allowed.
6. Applications shaded in dark gray are not recommended due to excessive liquid or suction pressure drop.

[ ] Designates Metric Conversions

Refrigerant Line Size Information (con't.)

13 - 16 SEER Single-Stage Air-Conditioners																
Unit Size	Allowable Liquid Line Size	Allowable Suction Line Size	Apply Long Line Guidelines if Linear Line Length Exceeds Those Shown Below (Feet)				Equivalent Length (Meters)									
							< 8	8-15	16-23	24-30	31-38	39-46	47-53	54-61	62-69	70-76
			(-)A13	(-)A14 A/B	(-)A14 W	(-)A16	Maximum Vertical Rise (Outdoor Unit Below Indoor Unit) * / Capacity Multiplier									
14.1 KW [4 Ton]	9.53 [3/8]	19.05 [3/4]	45	34	N/R	11	8 / 0.99	15 / 0.98	23 / 0.96	24 / 0.95	20 / 0.93	17 / 0.92	14 / 0.91	NR	NR	NR
	12.7 [1/2]	19.05 [3/4]	23	17	N/R	5	8 / 0.99	15 / 0.98	23 / 0.96	30 / 0.95	30 / 0.93	30 / 0.92	30 / 0.91	NR	NR	NR
	9.53 [3/8]	22.23 [7/8]	45	34	N/R	11	8 / 1.00	15 / 0.99	23 / 0.99	24 / 0.98	20 / 0.97	17 / 0.97	14 / 0.96	11 / 0.96	8 / 0.95	5 / 0.95
	12.7 [1/2]	22.23 [7/8]	23	17	N/R	5	8 / 1.00	15 / 0.99	23 / 0.99	30 / 0.98	30 / 0.97	30 / 0.97	30 / 0.96	30 / 0.96	30 / 0.95	30 / 0.95
17.6 KW [5 Ton]	9.53 [3/8]	19.05 [3/4]	24	17	N/R	0	8 / 0.99	15 / 0.97	23 / 0.94	19 / 0.92	14 / 0.90	NR	NR	NR	NR	NR
	12.7 [1/2]	19.05 [3/4]	12	8	N/R	0	8 / 0.99	15 / 0.97	23 / 0.94	30 / 0.92	30 / 0.90	NR	NR	NR	NR	NR
	9.53 [3/8]	22.23 [7/8]	24	17	N/R	0	8 / 1.00	15 / 0.99	23 / 0.98	19 / 0.97	14 / 0.96	10 / 0.95	5 / 0.94	NR	NR	NR
	12.7 [1/2]	22.23 [7/8]	12	8	N/R	0	8 / 1.00	15 / 0.99	23 / 0.98	30 / 0.97	30 /0.96	30 / 0.95	30 / 0.94	29 / 0.94	28 / 0.93	27 / 0.92
	9.53 [3/8]	28.58 [1-1/8]	24	17	N/R	0	8 / 1.01	15 / 1.01	23 / 1.00	19 / 1.00	14 / 0.99	10 / 0.99	5 / 0.99	NR	NR	NR
	12.7 [1/2]	28.58 [1-1/8]	12	8	N/R	0	8 / 1.01	15 / 1.01	23 / 1.00	30 / 1.00	30 / 0.99	30 / 0.99	30 / 0.99	29 / 0.99	28 / 0.99	27 / 0.98

NOTES:
1. Do not exceed 61 meters linear line length.
2. *Do not exceed 30 meters vertical separation if outdoor unit is above indoor unit.
3. **19.05 mm [3/4 in.] suction line should only be used for 1.5 ton systems if outdoor unit is below or at same level as indoor to assure proper oil return.
4. Always use the smallest liquid line allowable to minimize refrigerant charge.
5. Applications shaded in light gray indicate capacity multipliers between 0.90 and 0.96 which are not recommended, but are allowed.
6. Applications shaded in dark gray are not recommended due to excessive liquid or suction pressure drop.

[ ] Designates Metric Conversions

Performance Data @ AHRI Standard Conditions – Cooling

Tested Combination							
Outdoor Unit	Indoor Coil	Total Capacity BTU/H [kW]	Net Sensible BTU/H [kW]	Net Latent BTU/H [kW]	SEER	EER	Indoor CFM [L/s]
RA1418AJ1	RCF2417STA+RXMD-C04	17800 [5.2]	12100 [3.5]	5700 [1.7]	14.00	11.50	600 [283.2]
RA1424BJ1	RCF2417STA+RXMD-C04	23200 [6.8]	17500 [5.2]	5700 [1.7]	14.00	11.50	800 [376.0]
RA1430AJ1	RCF3617STA+RXMD-C04	28800 [8.4]	19500 [5.7]	9300 [2.7]	14.00	11.50	1000 [471.9]
RA1436AJ1	RCF3617STA+RXMD-C04	34200 [10.0]	23200 [6.8]	11000 [3.2]	14.00	11.50	1050 [495.5]
RA1436AC1	RCF3617STA+RXMD-C04	34200 [10.0]	23200 [6.8]	11000 [3.2]	14.00	11.50	1050 [495.5]
RA1436AD1	RCF3617STA+RXMD-C04	34200 [10.0]	23200 [6.8]	11000 [3.2]	14.00	11.50	1050 [495.5]
RA1442CJ1	RCF4821STA+RXMD-C04	39500 [11.6]	28900 [8.5]	10600 [3.1]	14.00	11.50	1350 [634.5]
RA1442CC1	RCF4821STA+RXMD-C04	39500 [11.6]	28900 [8.5]	10600 [3.1]	14.00	11.50	1350 [634.5]
RA1448AJ1	RCF4821STA+RXMD-C04	46000 [13.5]	31200 [9.1]	14800 [4.3]	14.00	11.70	1450 [684.3]
RA1448AC1	RCF4821STA+RXMD-C04	46000 [13.5]	31200 [9.1]	14800 [4.3]	14.00	11.70	1450 [684.3]
RA1448AD1	RCF4821STA+RXMD-C04	46000 [13.5]	31200 [9.1]	14800 [4.3]	14.00	11.70	1450 [684.3]
RA1460BJ1	RCF6024STA+RXMD-C04	55500 [16.3]	38100 [11.2]	17400 [5.1]	14.00	11.70	1525 [716.8]
RA1460AD1	RCF6024STA+RXMD-C04	55500 [16.3]	38100 [11.2]	17400 [5.1]	14.00	11.70	1525 [716.8]
RA1460BC1	RCF6024STA+RXMD-C04	55500 [16.3]	38100 [11.2]	17400 [5.1]	14.00	11.70	1525 [716.8]

Note: Additional ratings and system match ups can be accessed on MyRheem.com at: https://my.rheem.com/static/private/ahriresidential.html
Additional ratings and system match ups and downloadable ratings certificates can be accessed from the AHRI website: www.ahridirectory.org

[ ] Designates Metric Conversions

GUIDE SPECIFICATIONS

General

System Description

Outdoor-mounted, air-cooled, split-system air conditioner composite base pan unit suitable for ground or rooftop installation. Unit consists of a hermetic compressor, an air-cooled coil, propeller-type condenser fan, suction and legend line service valve, and a control box. Unit will discharge supply air upward as shown on contract drawings. Unit will be used in a refrigeration circuit to match up to a coil unit.

Quality Assurance

— Unit will be rated in accordance with the latest edition of AHRI Standard 210.

— Unit will be certified for capacity and efficiency, and listed in the latest AHRI directory.

— Unit construction will comply with latest edition of ANSI/ASHRAE and with NEC.

— Unit will be constructed in accordance with UL standards and will carry the UL label of approval. Unit will have c-UL-us approval.

— Unit cabinet will be capable of withstanding ASTM B117 1000-hr salt spray test.

— Air-cooled condenser coils will be leak tested at 150 psig and pressure tested at 550 psig.

— Unit constructed in ISO9001 approved facility.

Delivery, Storage, and Handling

— Unit will be shipped as single package only and is stored and handled per unit manufacturer's recommendations.

Warranty (for inclusion by specifying engineer) — U.S. and Canada only.

Products

Equipment

Factory assembled, single piece, air-cooled air conditioner unit. Contained within the unit enclosure is all factory wiring, piping, controls, compressor, refrigerant charge R-410A, and special features required prior to field start-up.

Unit Cabinet

— Unit cabinet will be constructed of galvanized steel, bonderized, and coated with a powder coat paint.

— All units constructed with louver coil protection and corner post. Louver can be removed by removing one fastener per louver panel.

AIR-COOLED, SPLIT-SYSTEM AIR CONDITIONER
RA14
1-1/2 TO 5 NOMINAL TONS

Fans

— Condenser fan will be direct-drive propeller type, discharging air upward.

— Condenser fan motors will be totally enclosed, 1-phase type with class B insulation and permanently lubricated bearings. Shafts will be corrosion resistant.

— Fan blades will be statically and dynamically balanced.

— Condenser fan openings will be equipped with coated steel wire safety guards.

Compressor

— Compressor will be hermetically sealed.

— Compressor will be mounted on rubber vibration isolators.

Condenser Coil

— Condenser coil will be air cooled.

— Coil will be constructed of aluminum fins mechanically bonded to copper tubes.

Refrigeration Components

— Refrigeration circuit components will include liquid-line shutoff valve with sweat connections, vapor-line shutoff valve with sweat connections, system charge of R-410A refrigerant, and compressor oil.

— Unit will be equipped with filter drier for R-410A refrigerant for field installation.

Operating Characteristics

— The capacity of the unit will meet or exceed _____ Btuh at a suction temperature of _____ °F/°C. The power consumption at full load will not exceed _____ kW.

— Combination of the unit and the evaporator or fan coil unit will have a total net cooling capacity of _____ Btuh or greater at conditions of _____ CFM entering air temperature at the evaporator at _____ °F/°C wet bulb and _____ °F/°C dry bulb, and air entering the unit at _____ °F/°C.

— The system will have a SEER of _____ Btuh/watt or greater at DOE conditions.

Electrical Requirements

— Nominal unit electrical characteristics will be _____ v, single phase, 60 hz. The unit will be capable of satisfactory operation within voltage limits of _____ v to _____ v.

— Nominal unit electrical characteristics will be _____ v, three phase, 60 hz. The unit will be capable of satisfactory operation within voltage limits of _____ v to _____ v.

— Unit electrical power will be single point connection.

— Control circuit will be 24v.

Special Features

— Refer to section of this literature identifying accessories and descriptions for specific features and available enhancements.

GENERAL TERMS OF LIMITED WARRANTY*

Rheem will furnish a replacement for any part of this product which fails in normal use and service within the applicable period stated, in accordance with the terms of the limited warranty.

***For complete details of the Limited and Conditional Warranties, including applicable terms and conditions, contact your local contractor or the Manufacturer for a copy of the product warranty certificate.**

Conditional Parts
(Registration Required) .....Ten (10) Years

The new degree of comfort.™

In keeping with its policy of continuous progress and product improvement, Rheem reserves the right to make changes without notice.

Rheem Heating, Cooling & Water Heating • 5600 Old Greenwood Road
Fort Smith, Arkansas 72908 • www.rheem.com

Rheem Canada Ltd./Ltée • 125 Edgeware Road, Unit 1
Brampton, Ontario • L6Y 0P5

INTEGRATED HOME COMFORT

PRINTED IN U.S.A. 6/19 QG FORM NO. A11-220 REV. 9