Draft Initial Study / Mitigated Negative Declaration

Bridge Preventative Maintenance Program

Town of Fairfax, California

Prepared for:

Town of Fairfax
142 Bolinas Road
Fairfax, California 94930

Attn: Kristin Arnold
karnold@townoffairfaxca.gov

Prepared by:

WRA, Inc.
2169 G East Francisco Boulevard
San Rafael, CA 94901

January 2026

WRA #22304

Contents

1.0 INTRODUCTION AND PURPOSE 6

2.0 PROJECT INFORMATION 6

2.1 Project Title 6

2.2 Lead Agency Name and Address 6

2.3 Project Location 6

2.3.1 Marin Road Bridge 7

2.3.2 Spruce Road Bridge 7

2.3.3 Canyon Road Bridge 7

2.4 Existing General Plan Designation and Zoning District 7

2.4.1 General Plan Designation 7

2.4.2 Zoning District 7

2.5 Surrounding Land Uses and Setting 8

3.0 PROJECT DESCRIPTION 19

3.1 Project Description 19

3.1.1 Project Construction Overview 19

3.1.2 Marin Road Bridge (Br. No. 27C-0143) 20

3.1.3 Spruce Road Bridge (Br. No. 27C-0141) 21

3.1.4 Canyon Road Bridge (Br. No. 27C-0146) 22

3.2 Project–Related Approvals, Agreements, and Permits 24

3.2.1 California Department of Fish and Wildlife (CDFW) 24

3.2.2 Regional Water Quality Control Board (RWQCB) 24

3.2.3 United States Army Corps of Engineers (Corps) 24

4.0 ENVIRONMENTAL FACTORS POTENTIALLY AFFECTED 29

4.1 Determination 29

4.2 Initial Study Checklist 30

4.2.1 Aesthetics 31

4.2.2 Agricultural and Forestry Resources 35

4.2.3 Air Quality 37

4.2.4 Biological Resources 45

4.2.5 Cultural Resources 69

4.2.6 Energy 73

4.2.7 Geology and Soils 75

4.2.8 Greenhouse Gas Emissions 81

4.2.9 Hazards and Hazardous Materials 84

4.2.10 Hydrology and Water Quality 88
4.2.11 Land Use and Planning 95
4.2.12 Mineral Resources 98
4.2.13 Noise 99
4.2.14 Population and Housing 104
4.2.15 Public Services 105
4.2.16 Recreation 107
4.2.17 Transportation 108
4.2.18 Tribal Cultural Resources 112
4.2.19 Utilities and Service Systems 115
4.2.20 Wildfire 118
4.2.21 Mandatory Findings of Significance 121
5.0 REFERENCES 125

List of Tables

Table 1. Project Consistency with BAAQMD 2017 Clean Air Plan 41
Table 2. Population Density and Associated Ambient Noise Levels 101
Table 3. Summary of Projects Considered in the Cumulative Impact Analysis 122

List of Figures

Figure 1. Location Map 9
Figure 2. Marin Road Bridge Project Site 10
Figure 3. Spruce Road Bridge Project Site 11
Figure 4. Canyon Road Bridge Project Site 12
Figure 5. Views of the Project Site – Marin Road Bridge BPMP 13
Figure 6. Views of Surrounding Land Uses – Marin Road Bridge BPMP 14
Figure 7. Views of the Project Site – Spruce Road Bridge BPMP 15
Figure 8. Views of Surrounding Land Uses - Spruce Road Bridge BPMP 16
Figure 9. Views of the Project Site – Canyon Road Bridge BPMP 17
Figure 10. Views of the Surrounding Land Uses – Canyon Road Bridge BPMP 18
Figure 11. Marin Road Bridge Repair Details 25
Figure 12. Spruce Road Bridge Repair Details 26
Figure 13. Construction Detour Plans 27

Figure 14. Canyon Road Bridge Repair Details.....28

List of Appendices

Appendix A. Canyon Road Bridge Arborist Report

Appendix B. Natural Environment Studies

Appendix C. Cultural Resources Reports

Appendix D. Hydrology Studies

List of Acronyms and Abbreviations

AB	Assembly Bill
APE	Area of Potential Effects
BAAQMD	Bay Area Air Quality Management District
BMPs	Best Management Practices
BSAs	Biological Study Areas
BPMP	Bridge Preventive Maintenance Program
CAAQS	California Ambient Air Quality Standards
CAL FIRE	California Department of Fire and Forestry
Caltrans	California Department of Transportation
CAP	Clean Air Plan
CARB	California Air Resources Board
CaTNAP	Caltrans Traffic Noise Analysis Protocol
CCC	Central California Coastal
CCR	California Code of Regulations
CDFW	California Department of Fish and Wildlife
CESA	California Endangered Species Act
CEQA	California Environmental Quality Act
CGS	California Geological Survey
CH_4	methane
CNDDB	California Natural Diversity Database
CNEL	Community Noise Equivalent Level
CNPS	California Native Plant Society
CO_2	carbon dioxide
Corps	U.S. Army Corps of Engineers
CRHR	California Register of Historic Resources
CWA	Clean Water Act
dB	decibel
dBA	A-weighted decibel scale
DOT	Department of Transportation
DPM	diesel particulate matter
DPS	District Population Segment
DTSC	Department of Toxic Substances Control
du	dwelling unit
ESCP	Erosion and Sediment Control Plan
EFH	Essential Fish Habitat

EIR	Environmental Impact Report
EPA	Environmental Protection Agency
ESA	Endangered Species Act
Far Western	Far Western Anthropological Research Group Inc.
FEMA	Federal Emergency Management Agency
FHWA	Federal Highway Administration
FHSZ	Fire Hazard Severity Zones
FIGR	Federated Indians of Graton Rancheria
FIRM	Federal Insurance Rate Maps
FPD	Fairfax Police Department
FO	Functionally Obsolete
GHGs	Greenhouse Gases
HPSR	Historical Property Survey Report
IS/MND	Initial Study/Mitigated Negative Declaration
LRA	Local Responsibility Area
MBTA	Migratory Bird Treaty Act
MCE	Marin Clean Energy
MCSTOPPP	Marin County Stormwater Pollution Prevention Program
MLD	Most Likely Descendant
MMTCO2e	million metric tons of carbon dioxide equivalent
MMWD	Municipal Water District
NAAQS	National Ambient Air Quality Standards
NAHC	Native American Heritage Commission
NES	Natural Environment Studies
NMFS	National Marine Fisheries Service
NPDES	National Pollutant Discharge Elimination System
N_2O	nitrous oxide
NO_x	Nitrogen Oxide
NRHP	National Register of Historic Places
NRCS	Natural Resources Conservation Service
NSO	Northern Spotted Owl
OEHHA	Office of Environmental Health Hazard Assessment
OHW	Ordinary High Water
PG&E	Pacific Gas & Electric
PM	Particulate matter
$PM_{2.5}$	Fine Particulate Matter
PM_{10}	Coarse Particulate Matter
PRC	Public Resources Code
Proposed project	Bridge Preventive Maintenance Program
ROG	reactive organic gases
RSP	Rock Slope Protection
RVFD	Ross Valley Fire Department
RVSD	Ross Valley Sanitary District
RWQCB	Regional Water Quality Control Boards
SB	Senate Bill
SD	Structurally Deficient
SFBAAB	San Francisco Bay Area Air Basin
SRA	State Responsibility Areas
SWPPP	Storm Water Pollution Prevention Plan

SWRCB	State Water Resources Control Board
TACs	Toxic Air Contaminants
Town	Town of Fairfax
USFWS	United States Fish and Wildlife Service
VMT	Vehicle Miles Traveled
WDR	Waste Discharge Requirement
WRA, Inc.	WRA, Inc.
XPI	Extended Phase I

1.0 INTRODUCTION AND PURPOSE

This Initial Study/Mitigated Negative Declaration of environmental impacts is being prepared to conform to the requirements of the California Environmental Quality Act (CEQA) Statute and Guidelines (California Code of Regulations 15000 et. seq.). This Initial Study/ Mitigated Negative Declaration (IS/MND) evaluates the potential environmental impacts which might reasonably be anticipated to result from implementation of the Bridge Preventive Maintenance Program (proposed project). The Town of Fairfax (Town) is the Lead Agency as defined under CEQA Guidelines Section 15050.

The purpose of an Initial Study is to provide the Lead Agency with information to use as the basis for deciding whether to prepare an Environmental Impact Report (EIR) or a Negative Declaration for the proposed project. A Negative Declaration briefly describes the reason that a proposed project would result in a significant effect on the environment, and the basis of the decision not to prepare an EIR. This Initial Study describes the Town's efforts to ensure that all potentially significant impacts are reduced to a less-than-significant level with mitigation incorporated, qualifying for a Proposed Mitigated Negative Declaration.

This IS/MND provides the Town and the public with an understanding of the potential environmental impacts associated with the proposed project. The purpose of the proposed project includes the physical modifications of three existing bridges in the Town of Fairfax that are proposed to undergo preventive maintenance repairs through Caltrans' Highway Bridge Program's Bridge Preventive Maintenance Program (BPMP).

2.0 PROJECT INFORMATION

2.1 Project Title

Town of Fairfax Bridge Preventative Maintenance Program

2.2 Lead Agency Name and Address

Town of Fairfax
142 Bolinas Road
Fairfax, California 94930

Kristin Arnold
Public Works Director
(415) 453-0291
karnold@townoffairfaxca.gov

2.3 Project Location

The proposed project consists of three existing bridges proposed to undergo preventive maintenance repairs through Caltrans' BPMP. Two of the bridges, on Marin Road and Spruce Road, are within a few blocks of each other, while the third creek crossing, Canyon Road Bridge, is approximately 2.35 miles southwest of the other two (Figure 1).

2.3.1 Marin Road Bridge

The Marin Road Bridge is located 0.6 miles north-northwest of the downtown center of the Town of Fairfax (Figure 2). At the site, the bridge spans Fairfax Creek at a location approximately 135 feet west of Sir Francis Drake Boulevard. The Marin Road Bridge spans Fairfax Creek approximately 1,845 creek feet downstream from "Westbrae Dam" bordering Olema Road, and about 735 creek feet upstream from Olema Road Bridge.

2.3.2 Spruce Road Bridge

The Spruce Road Bridge is located 0.25 miles northwest of the downtown center of Fairfax (Figure 3). At the site, the bridge spans Fairfax Creek at the intersection of Spruce Road and Arroyo Road.

2.3.3 Canyon Road Bridge

The Canyon Road Bridge is located 1.3 miles southwest of the downtown center of Fairfax (Figure 4). At the site, the bridge spans San Anselmo Creek at a location about 275 feet south of Cascade Drive. The Canyon Road Bridge spans San Anselmo Creek about 3,280 creek feet downstream from the Fairfax corporate limits near the downstream end of the Cascade Canyon Preserve, and about 2,270 creek feet upstream from the Meadow Way Bridge.

2.4 Existing General Plan Designation and Zoning District

2.4.1 General Plan Designation

Marin Road Bridge:

- Residential 1-6/dwelling units (du)/acre

Spruce Road Bridge:

- Residential 1-6 du/acre
- Residential 7-12 du/acre

Canyon Road Bridge:

- Residential 1-6 du/acre

2.4.2 Zoning District

Marin Road Bridge:

- RD-5.5-7 – Residential

Spruce Road Bridge:

- RS-6 – Single Family Residential
- RM – Multi-Family Residential

Canyon Road Bridge:

- RS-6 – Single Family Residential

2.5 Surrounding Land Uses and Setting

Marin Road Bridge: Existing land uses near the Marin Road Bridge project site consist of single-family residential homes, pedestrian facilities and a bus stop. The nearest residences are located less than 100 feet away from the site. The Fairfax Creek channel flows immediately north and south, as well as under the project site (Figures 5 and 6).

Spruce Road Bridge: Existing land uses near the Spruce Road Bridge project site consist of single-family residential homes and a multi-family complex. The nearest residences are located less than 50 feet away from the site. The Fairfax Creek channel flows immediately north and south, as well as under the project site (Figures 7 and 8).

Canyon Road Bridge: Existing land uses near the Canyon Road Bridge project site consist of single-family residential homes. The nearest residences are located less than 100 feet away from the site. San Anselmo Creek flows immediately west and east, as well as under the project site (Figures 9 and 10).

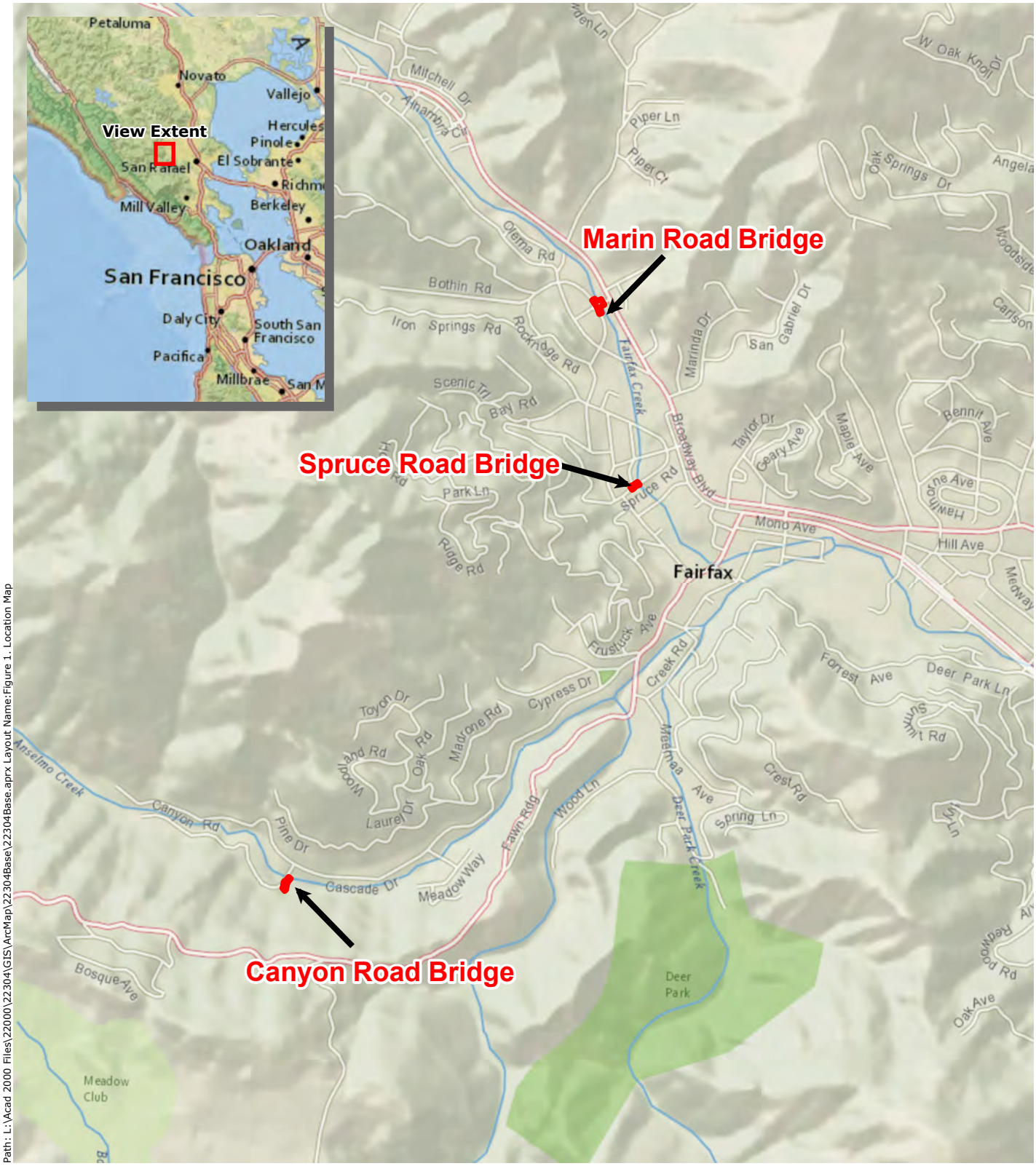

Path: L:\Acad 2000 Files\22000\22304\GIS\ArcMap\22304Base\22304Base.aprx Layout Name:Figure 1. Location Map

Sources: National Geographic, WRA | Prepared By: rhona.mcchesney, 8/27/2025

Figure 1. Location Map

Bridge Preventive Maintenance Program
Town of Fairfax, California

0 1,000 2,000 Feet

N

wra Environmental Consultants

Figure 2.
Marin Road
Bridge Project Site

Marin Road Bridge
Bridge: 27C-0143

Bridge Preventive Maintenance Program
Town of Fairfax, California

Project Site Boundary (0.23 ac.)
Parcel Boundary
Building Footprint
Streams

N
0 50 100
Feet

wra
Environmental Consultants

Sources: ESRI World Imagery Base Map, WRA | Prepared By: rhona.mcchesney, 8/28/2025

Path: L:\Acad 2000 Files\22000\22304\GIS\ArcMap\22304Base\22304Base.aprx Layout Name: Figure 2. Marin Road Bridge Project Site

Figure 3. Spruce Road Bridge Project Site

Spruce Road Bridge
Bridge: 27C-0141

Bridge Preventive Maintenance Program
Town of Fairfax, California

- Project Site Boundary (0.09 ac.)
- Parcel Boundary
- Building Footprint
- Streams

N

0 50 100
Feet

wra
Environmental Consultants

Sources: ESRI World Imagery Base Map, WRA | Prepared By: rhona.mcchesney, 8/28/2025

Path: L:\Acad 2000 Files\22000\22304\GIS\ArcMap\22304Base\22304Base.aprx Layout Name: Figure 3. Spruce Road Bridge Project Site

Figure 4. Canyon Road Bridge Project Site

Canyon Road Bridge
Bridge: 27C-0146

Bridge Preventive Maintenance Program
Town of Fairfax, California

- Project Site Boundary (0.14 ac.)
- Parcel Boundary
- Building Footprint
- Streams

N

0 50 100
Feet

wra
Environmental Consultants

Sources: ESRI World Imagery Base Map, WRA | Prepared By: rhona.mcchesney, 8/28/2025

Path: L:\Acad 2000 Files\22000\22304\GIS\ArcMap\22304Base\22304Base.aprx Layout Name: Figure 4. Canyon Road Bridge Project Site

View 1. View of the project site looking northwest from Fairfax Creek.

View 2. View of the project site looking southwest from Marin Road.

View 3. View of the project site looking northeast from Marin Road.

View 4. View of the project site looking northeast from Marin Road.

Figure 5. Views of the Project Site - Marin Road Bridge BPMP

Bridge Preventive Maintenance Program
Town of Fairfax, California

wra Environmental Consultants

P:\Projects\22000\22304\3.0_BPMP\Figures\CEQA\Photo Plates Marin

View 1. View looking northwest from Marin Road.

View 2. View looking southeast from Marin Road.

View 3. View looking northwest from Marin Road.

View 4. View looking southeast from Marin Road.

Figure 6. Views of the Surrounding Land Uses - Marin Road Bridge BPMP

Bridge Preventive Maintenance Program
Town of Fairfax, California

wra Environmental Consultants

View 1. View of the project site looking southwest from Spruce Road.

View 2. View of the project site looking northeast from Spruce Road.

View 3. View of the project site looking north from Spruce Road.

View 4. View of the project site looking northeast from Spruce Road.

Figure 7. Views of the Project Site - Spruce Road Bridge BPMP

Bridge Preventive Maintenance Program
Town of Fairfax, California

wra Environmental Consultants

P:\Projects\22000\22304\3.0_BPMP\Figures\CEQA\Photo Plates Canyon and Spruce

View 1. View looking southwest from Spruce Road.

View 2. View looking northeast from Spruce Road.

View 3. View looking southwest from Spruce Road.

View 4. View looking northwest from Spruce Road Bridge.

Figure 8. Views of Surrounding Land Uses - Spruce Road Bridge BPMP

Bridge Preventive Maintenance Program
Town of Fairfax, California

wra Environmental Consultants

P:\Projects\22000\22304\3.0_BPMP\Figures\CEQA\Photo Plates Canyon and Spruce

View 1. View of the project site looking northeast from Canyon Road.

View 2. View of the project site looking west from creek bluff.

View 3. View of the project site looking southwest from Canyon Road.

View 4. View of the project site looking southwest from Canyon Road.

Figure 9. Views of the Project Site - Canyon Road Bridge BPMP

Bridge Preventive Maintenance Program
Town of Fairfax, California

wra Environmental Consultants

P:\Projects\22000\22304\3.0_BPMP\Figures\CEQA\Photo Plates Canyon and Spruce

View 1. View looking southwest from Canyon Road Bridge.

View 2. View looking southwest from creek bluff.

View 3. View looking west from Canyon Road Bridge.

View 4. View looking southwest from Cascade Drive.

Figure 10. Views of the Surrounding Land Uses - Canyon Road Bridge BPMP

Bridge Preventive Maintenance Program
Town of Fairfax, California

wra Environmental Consultants

P:\Projects\22000\22304\3.0_BPMP\Figures\CEQA\Photo Plates Canyon and Spruce

3.0 PROJECT DESCRIPTION

3.1 Project Description

The proposed project consists of three existing bridges proposed to undergo preventive maintenance repairs through the BPMP. The purpose of the BPMP is to maintain the existing inventory of bridges in good or fair condition, correct structural deficiencies in a bridge's life before requiring costly rehabilitation, reconstruction, or replacement, extend the service life of existing bridges, and make efficient use of limited resources (California Department of Transportation [CalTrans] 2024). Various improvements and levels of repair are needed for each of the three bridges.

3.1.1 Project Construction Overview

For each bridge project the work in the creek would be completed during the dry season when the local segments of creek are at their lowest flow rates. The work areas would be dewatered by temporarily diverting any potential flows using means such as short dams made with sandbags, and/or longitudinal piping to bypass the work areas. Stagnant water would be pumped out to completely create a dry work area. In compliance with Chapter 8.32 of the Town of Fairfax Municipal Code, construction-phase best management practices (BMPs) would be implemented to prevent pollutant and sediment runoff into nearby waterways. Erosion control BMPs may include, but are not limited to, timely revegetation of graded areas, the use of hydroseed and hydraulic mulches, installation of erosion control blankets, and sediment detention basins, dams, or filters. Pollution prevention BMPs may include designated washout areas or facilities, control of trash and recycled materials, tarping of materials stored on-site, and proper location of and maintenance of temporary sanitary facilities. The Town has the authority to review designs and proposals for construction activities to determine whether adequate BMPs would be installed, implemented, and maintained during construction and once construction is complete.

No tree removal is proposed as part of the project. Limited trimming and cutting of vegetation around the worksites, as well as clearing and grubbing are also expected. For application of methacrylate and polyester concrete, the contractor would be required to conform to the recommendations of a certified industrial hygienist for safe worksite operations. Hours of construction operations would be limited to regular daylight work hours, aside from the exception of at least one nighttime operation at the Canyon Road Bridge site.

Most of the construction equipment needed for project work would be relatively compact, including air compressors, generators, a shot blaster, shotcrete pumps and hoses, concrete saws, concrete chipping guns and drills, and soil drilling equipment. Construction vehicles moving in and out of the construction areas would be a small loader, such as a Bobcat with backhoe or bucket attachments, polyester concrete mix truck, paver, roller, small excavator, a coldplaning machine, snooper lift truck, utility pickup trucks, flatbed trucks, dump trucks, dump trailers, a truck-mounted crane, concrete delivery trucks and a testing van. These vehicles and equipment would not be at all of the sites at the same time and would be staged within the Areas of Potential Effects (APEs) as needed.

No new easement or temporary or permanent right-of-way would be necessary for project implementation. No utility relocations would be necessary for the work on any of the three

bridges. All access to the project sites and staging areas would be via the areas within the APEs. Equipment, large or small, would be lowered onto the creek bed with a truck-mounted crane to avoid ramping from the top to the creek bed for vehicles. Work would take place from the bridge topside as well as in the creek at two locations, as described below. The operations would be done manually, as well as with power equipment. Rocks for riprap would also be lowered one by one onto the needed areas with a crane. Proper signage providing notice of future construction and any road closure would be installed at all three sites on both sides of each bridge.

The three bridges are aggregated into one program for the purposes of CEQA and regulatory permitting. The specifics of the proposed work at each bridge site are covered in the following sections.

3.1.2 Marin Road Bridge (Br. No. 27C-0143)

Marin Road Bridge is a single span concrete earth-filled closed arch structure, constructed over Fairfax Creek presumably circa 1930. The bridge is on a residential street leading to Sir Francis Drake Boulevard, a major arterial through Fairfax. The structure is approximately 41 feet long and a little over 26 feet wide. The bridge supports two lanes of traffic nearly 10 feet above the creek bed. There are no sidewalks on the bridge, but a separate steel pedestrian/bicycle bridge exists for non-motorized travelers immediately upstream of this bridge (the latter bridge is not included in the BPMP).

Marin Road Bridge is not eligible for National Register of Historic Places (NRHP) listing. It has a Sufficiency Rating of 68.0 but is flagged as neither Structurally Deficient (SD) nor Functionally Obsolete (FO) in the latest (2014) Caltrans Bridge Inspection Report.

The BPMP repairs for Marin Road Bridge and the method of construction consist of the following components (as shown on Figure 11):

- **Repair of the toppling bridge wingwall:** The leaning, rotating and separated concrete wingwall on the southeast side (downstream of the bridge) would be repaired in-situ. The existing wingwall is approximately 10 feet long and eight feet high. The wingwall would be repaired by reconnecting it to the existing bridge with steel dowels and rebar. The wingwall would be surfaced with a fresh layer of lightly reinforced air-blown concrete (shotcrete) and stabilized with soil nails pinning it to the soil. Soil nails are steel tension elements placed in holes drilled through the concrete wingwall and the soil behind it for a distance of approximately 15-20 feet, inclined at an angle of 15 degrees. The ends of these tension elements are buried in a bulb of grout pumped into the end of the drilled hole, called bond zone, allowing the bond zone to mobilize the soil through friction. The other end of the tension elements would protrude out of the wingwall surface and buried in the wingwall concrete overlay, anchored with special hardware and tensioned slightly to take the slack out of the line, creating a fastening system that would disallow the future movements of the wingwall.
- **Repair of the tattered rock slope protection (RSP) around the above wingwall:** The existing rocks making up the scattered riprap would be collected and a new course of rock riprap would be installed, which would be sized for the top anticipated creek flow velocity. The soil volume below the bottom of the wingwall would be excavated along the front for a width and depth of two feet each to create a trench to place the rock in as a buttress against future scour. On the free edge of the wingwall not connecting with the

bridge headwall, a similar type of excavation would occur to place rock and connect to the RSP buttressing at the foot of the wall. This would, in essence, surround the two exposed edges of the wingwall with rock riprap. Excavation at the edge of the wingwall for the RSP would be done manually and with small power equipment. The surface of the rock riprap would be flush with concrete wingwall, the creek bed, and the embankment to not protrude into the waterway and impact water flows or flow capacity. The trenches housing the RSP would be lined with special geotextile fabric to prevent the migration of the finely grained soil particles and erosion of the soil around the rock.

- **Repair of the structural damage to another wingwalls:** This second wingwall is on northwest side (upstream of the bridge) and is positioned vertically. The wingwall connects with the bridge headwall at an angle and is cracked horizontally near the bottom for five to six feet and has dropped five to six inches below the crack due to gravity. The repair work would consist of cleaning the damaged and cracked concrete, patching the crack with special grout to prevent further deterioration of the bridge, and burying some rock below the creek bed surface and in front of the wingwall to prevent further deterioration. The surface of the rock riprap would be flush with the creek bed in order to not protrude into the waterway and impact water flows or flow capacity. Geotextile lining would be placed around the rock riprap.
- **Repair of structural concrete spalls in the underside of the bridge:** A couple of structurally damaged spots in the concrete underside of the bridge would be repaired manually. After cleaning the rust from the steel rebars and removing the unsound concrete within the spall, a special agent, such as epoxy grout, would be applied and made flush with the concrete surfaces to protect the reinforcement and patch the concrete.

An APE drawing (Figure 2) and a preliminary Bridge General Plan (Figure 11) for the repairs have been developed for this bridge work. The work would be at both the deck and below deck levels and is expected to take as many as ten working days from start to finish. The bridge would remain entirely open to motorized and non-motorized traffic throughout project construction; however, a flag person directing traffic may be necessary at times to ensure safe travel through the site.

3.1.3 Spruce Road Bridge (Br. No. 27C-0141)

Spruce Road Bridge is a highly skewed, single span concrete T-beam structure over Fairfax Creek, presumed to have been constructed circa 1930. The structure is approximately 22 feet long and 37 feet wide. The bridge supports two lanes of traffic and two five-foot wide sidewalks and concrete railings nearly 12 feet above the creek bed. The bridge is not eligible for NRHP listing. It has a Sufficiency Rating of 63.9 but is not flagged as either Structurally Deficient or Functionally Obsolete in the latest Caltrans Bridge Inspection Report (from 2014 inspections).

The BPMP repairs for Spruce Road Bridge are shown in Figure 12 and consist of the following:

- **Sealing of the deck:** The asphalt concrete on the bridge deck would be removed with a specialized asphalt grinder. After cleaning the deck and repairing any unsound concrete, work would be followed by the application of a concrete sealant called methacrylate. The sealant would be applied with a mop throughout the deck and sprinkled with a light layer of sand while it is still tacky, which would ensure better tire grip along the bridge deck surface. Sealing the deck would be followed by applying a layer of polyester

concrete overlay. This mixture would be dumped on the deck from a special polyester concrete mix truck, spread, leveled and broom-finished to proper deck grades by concrete finishers.

- **Repair of expansion joints:** The rubber bridge expansion joint seals at each end of the bridge would be replaced. The new concrete deck grades at the ends of the bridge would be transitioned to the asphalt surface on the approach roadways within 10 feet of the ends of the bridge.
- **Repair of structural concrete spalls in the underside of the bridge:** The numerous bridge spalls in the structural members would be cleaned up and patched with special epoxy grout. The work under the bridge would be done using a "snooper" truck lift parked on the deck, eliminating the need for scaffolding or working in the creek.

An APE drawing (Figure 3) and a preliminary Bridge General Plan (Figure 12) for the repairs have been developed for this bridge work. The work would be completed entirely from the bridge deck and street level; no work in the creek would be needed. The work is expected to take as many as ten working days from start to finish. The bridge would be closed off to motorized traffic for a number of hours a few times during this period but would remain open to foot traffic on the sidewalks. Motorized traffic would be detoured via Arroyo Road and Azalea Avenue during the temporary closure, as shown in Figure 13.

3.1.4 Canyon Road Bridge (Br. No. 27C-0146)

Canyon Road Bridge is a single-span precast voided slab concrete superstructure over San Anselmo Creek. The bridge was constructed in 1996 on two abutments remaining from a previous bridge at this location. The structure is approximately 30 feet long and slightly over 15 feet wide and supports a single lane of traffic nearly 15 feet above the creek bed. The bridge has guard railings but does not have any sidewalks. The bridge has a Sufficiency Rating of 72.8 and is flagged as Functionally Obsolete by Caltrans in the latest Bridge Inspection Report (2014) due to its narrow width. However, the narrow width is due to the Town's decision to construct the new deck for a single lane bridge and the bridge should not be considered as Functionally Obsolete for this reason. The bridge is not eligible for NRHP listing.

There is a concrete fish ladder that begins just upstream of the bridge and ends just downstream of it. The fish ladder consists of a concrete invert covering the creek bed from abutment to abutment, and a depressed rectangular fish ladder structure with steel guides situated in the center.

The Canyon Road Bridge BPMP repairs are shown in Figure 14 and consist of the following:

- **Replacing the existing northwest wingwall:** The northwest wingwall is currently made up of stacks of solidified concrete sacks. A cluster of old redwood trees behind the wingwall is causing the wingwall to bulge, making the possibility of its collapse a hazard. The stacked concrete sacks would be removed one by one manually and hauled away. The redwood tree cluster would be exposed and protected in place during project construction. The new vertical wingwall would be an approximately 15 foot-wide by seven- to eight-foot-tall reinforced concrete wall, located a short distance in front of the redwood cluster and connected to the left edge of the existing bridge abutment. The new wingwall would be stabilized with several soil nails going through the trunks and/or roots of the redwood trees. The new wingwall surface would come to the edge of the concrete

fish ladder and would have a vertical expansion joint in it to allow the tree trunk to grow outwardly. An approximately nine-foot segment of the wall would have a footing, protruding three feet away from the face of the wall, the top surface of which would be flush with the creek bed. Excavation at the edge of the creek for the wingwall and its footing would be done manually and with small power equipment lowered from the top of the bridge. The surface of the new wingwall would be flush and in line with the existing abutment wall in order to not protrude into the waterway and impact water flows or flow capacity. The space behind the wingwall housing the redwood tree roots and base would be backfilled with soil. A new cable railing would be installed on top of the wall for fall protection. A two-foot wide by two-foot-deep course of rock riprap with geotextile lining would be placed in front of the foundation of the wall, flush with the creek bed, for protection of the footing from scour.

- **Repair of the structural damage to the north abutment:** To prevent the further deterioration of the north abutment, approximately two inches of concrete on the surface of the north abutment wall would be removed manually in order to expose the rebar grip and clean the reinforcement. The concrete and dust from chipping and grinding the concrete surface would be captured and hauled away. Once the area is clean, the reinforcement grid in the wall would be covered with a new two-inch layer of special grout and finished smoothly.
- **Repair of the northeast bridge wingwall:** The short existing northeast wingwall on the right side of the north abutment would be removed and replaced with an extended wall to envelope an existing storm drainpipe daylighting adjacent to the bridge. The existing pipe discharge is eroding the creek next to the bridge. The new wingwall would be doweled into the abutment wall and angled into the creek bank, avoiding any intrusion into the current creek channel. The wingwall extension would be fortified with a couple of soil nails into the exiting bank. This wall would also have a short triangular footing in front, the top of which would be flush with the creek bed, joining with the existing invert slab. The downstream edge of the wall would be protected from erosion with a two-foot wide by two-foot-deep course of rock riprap buried into the creek bank and flush with the exposed slope. A new cable railing would be installed on top of the wall for fall protection.
- **Sealing the cracks in the bridge deck:** The bridge deck would be sealed with methacrylate, similar to Spruce Road Bridge; however, no polyester concrete would be used. Sealing of the deck would require bridge closure for approximately four to five hours, which would be completed at nighttime. In order to ensure the safety of residents during this time, a first-response crew and vehicle from Ross Valley Fire Department would be positioned on the south end of the bridge for any emergency situations. Secondly, the bridge would be opened for crossing by covering the sealing agent with plywood if an emergency crossing is needed during the short duration of bridge closure. Prior notifications would be sent to the neighborhood to inform them of the work schedule and details.
- **Installation of safety signage and guard railings:** Two narrow bridge signs would be installed at each approach to the bridge to enhance safety over the crossing. The existing wooden approach railings at all four corners of the bridge would be replaced with metal beam guard railings.

An APE drawing (Figure 4) and a preliminary Bridge General Plan (Figure 14) for the repairs have been developed for this bridge work. The work would be at both the deck and below deck levels and is expected to take as many as fifteen working days from start to finish.

3.2 Project–Related Approvals, Agreements, and Permits

The information contained in this IS/MND will be used by the Town of Fairfax as it considers whether to approve the proposed project. If the project is approved, the IS/MND would be used by the Town and responsible and trustee agencies in conjunction with various approvals and permits. These actions include, but may not be limited to, the following approvals by the agencies indicated:

3.2.1 California Department of Fish and Wildlife (CDFW)

- Section 1602 Lake and Streambed Alteration Agreement

3.2.2 Regional Water Quality Control Board (RWQCB)

- Clean Water Act, Application for Section 401 Water Quality Certification
- Notice of Intent under the State Construction General National Pollutant Discharge Elimination System (NPDES) Permit

3.2.3 United States Army Corps of Engineers (Corps)

- Clean Water Act Section 404 Form 4345, Application for Department of the Army Permit

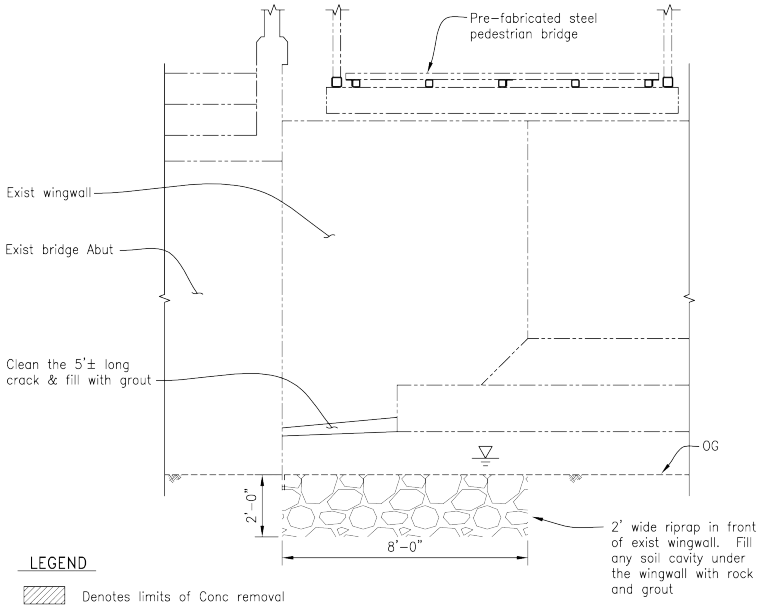

ELEVATION B-B

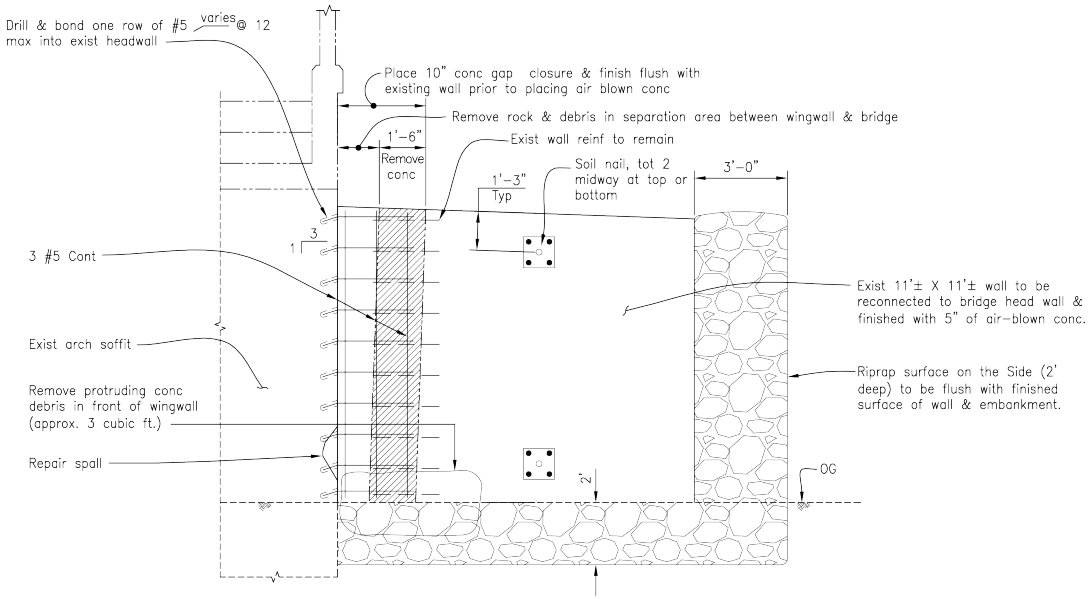

ELEVATION A-A

NOTE:

The contractor shall verify all controlling field dimensions before ordering or fabricating any material.

Figure 11. Marin Road Bridge Repair Details

Bridge Preventive Maintenance Program
Town of Fairfax, California

wra Environmental Consultants

Date: December 2015
Source: CIC, Inc.

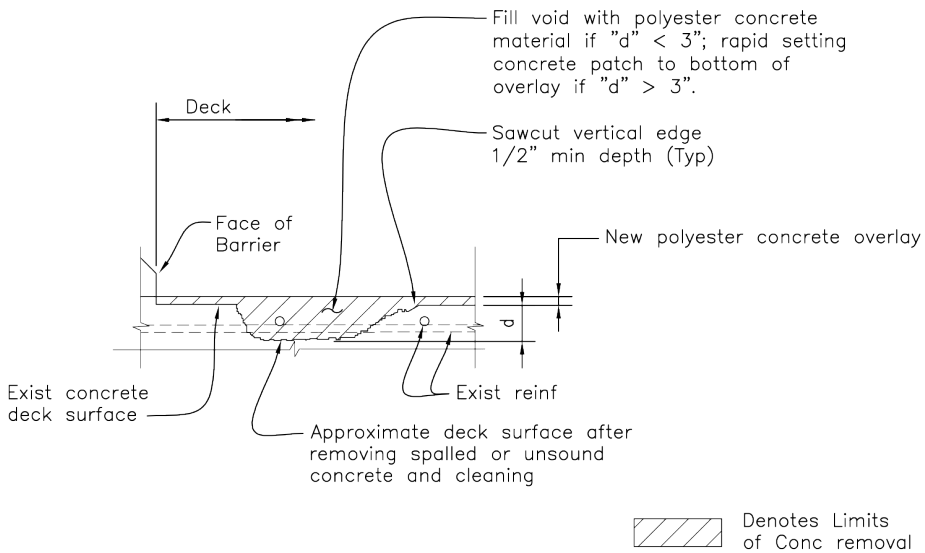

UNSOUND CONC REPAIR DETAIL

No Scale

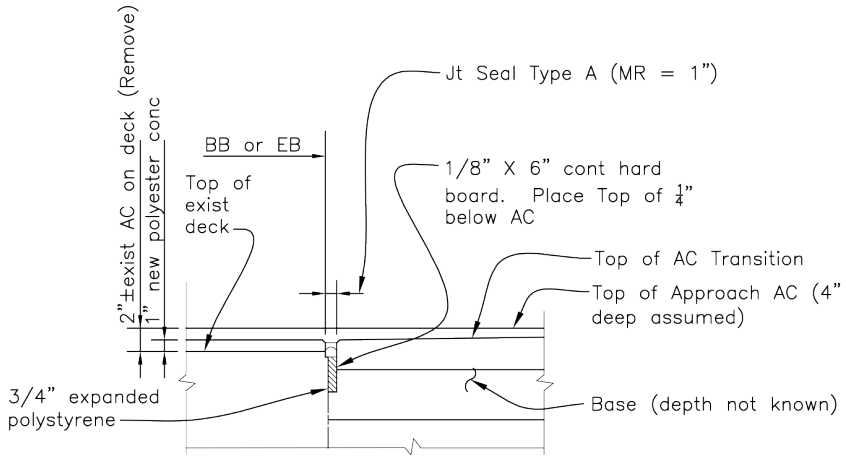

B6-21 SECTION THRU ABUTMENT – JT SEALS DETAILS

NOTE:

The contractor shall verify all controlling field dimensions before ordering or fabricating any material.

Figure 12. Spruce Road Bridge Repair Details

Bridge Preventive Maintenance Program
Town of Fairfax, California

wra Environmental Consultants

Date: December 2015
Source: CIC, Inc.

NOTES

1. Locations of construction area signs as shown are approximate. exact locations will be determined by the Engineer. TTC shall be in accordance of the latest edition of the ca MUTCD.
2. Sign dimensions are shown in inches.
3. Regulatory signs shall have black lettering on white background.
4. Spruce Rd. Bridge sidewalk will remain open during construction.
5. Sign codes are California MUTCD, unless otherwise noted.
6. See Canyon Road Bridge General Plan sheet traffic handling during deck sealing operations.
7. For permanent sign locations at Canyon Rd. Bridge see Canyon Road Bridge General Plan.

DETOUR PLAN

1. Spruce Avenue closed between Azalea Drive & Arroya Road. See detour plan on this sheet. Use Azalea Drive via Arroya Rd.

LEGEND

- Project Location
- Sign
- (A) Sign Number
- Traffic Detour

Construction Area Signs

SIGN ID	SIGN CODE	PANEL SIZE	SIGN MESSAGE	NO. OF SIGNS
(A)	R11-3 *	18x24	Road Closed – Local Traffic Only	2
(B)	R7-1L	12x18	No Parking Anytime	4
(C)	R7-1R	12x18	No Parking Anytime	3
(D)	W20-1	24x24	Road Work	7
(E)	W20-2	24x24	Detour Ahead	3
(F)	M4-8	12x24	Detour	3
(G)	W1-6	8x24	→	4
(H)	–	36x36	Road Closed 10 P.M. – 4 A.M. on (Date)	2

Permanent Signs

(O)	W5-3	30x30	One Lane Bridge	2

* MUTCD code

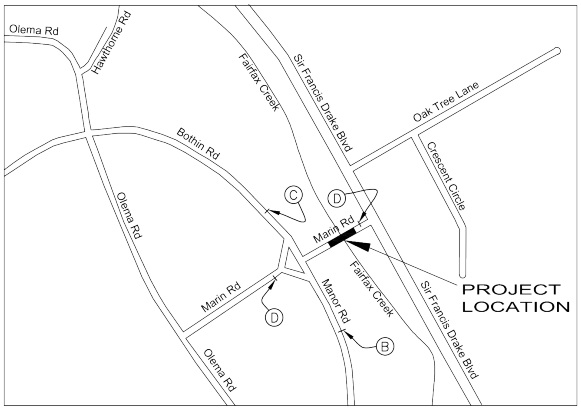

MARIN RD. CONSTRUCTION AREA SIGNS

NOT TO SCALE

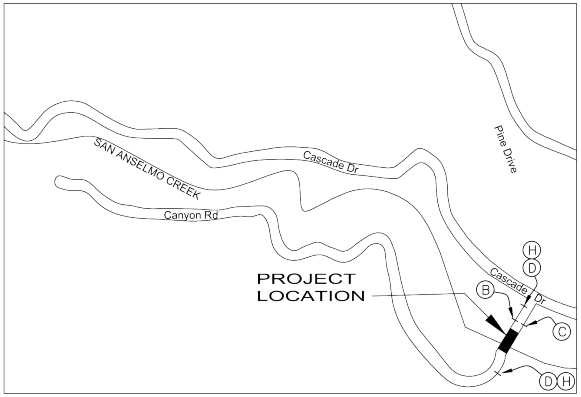

CANYON RD. CONSTRUCTION AREA SIGNS

NOT TO SCALE

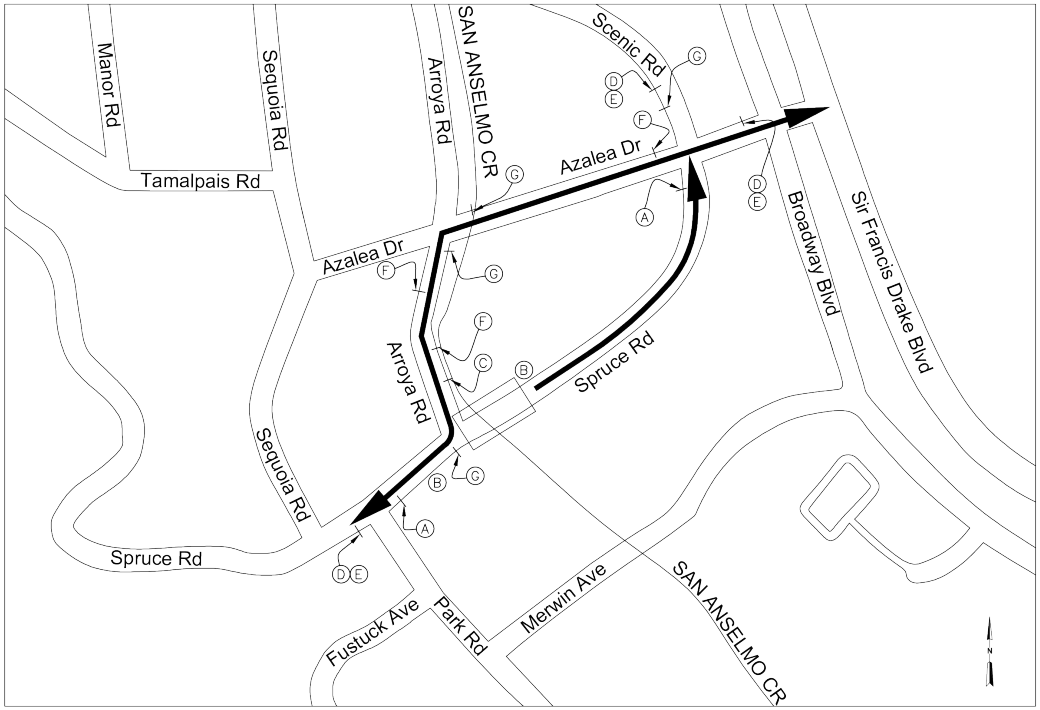

SPRUCE ROAD DETOUR PLAN AND CONSTRUCTION AREA SIGNS

Figure 13. Construction Detour Plans

Bridge Preventive Maintenance Program
Town of Fairfax, California

wra Environmental Consultants

Date: December 2015
Source: CIC, Inc.

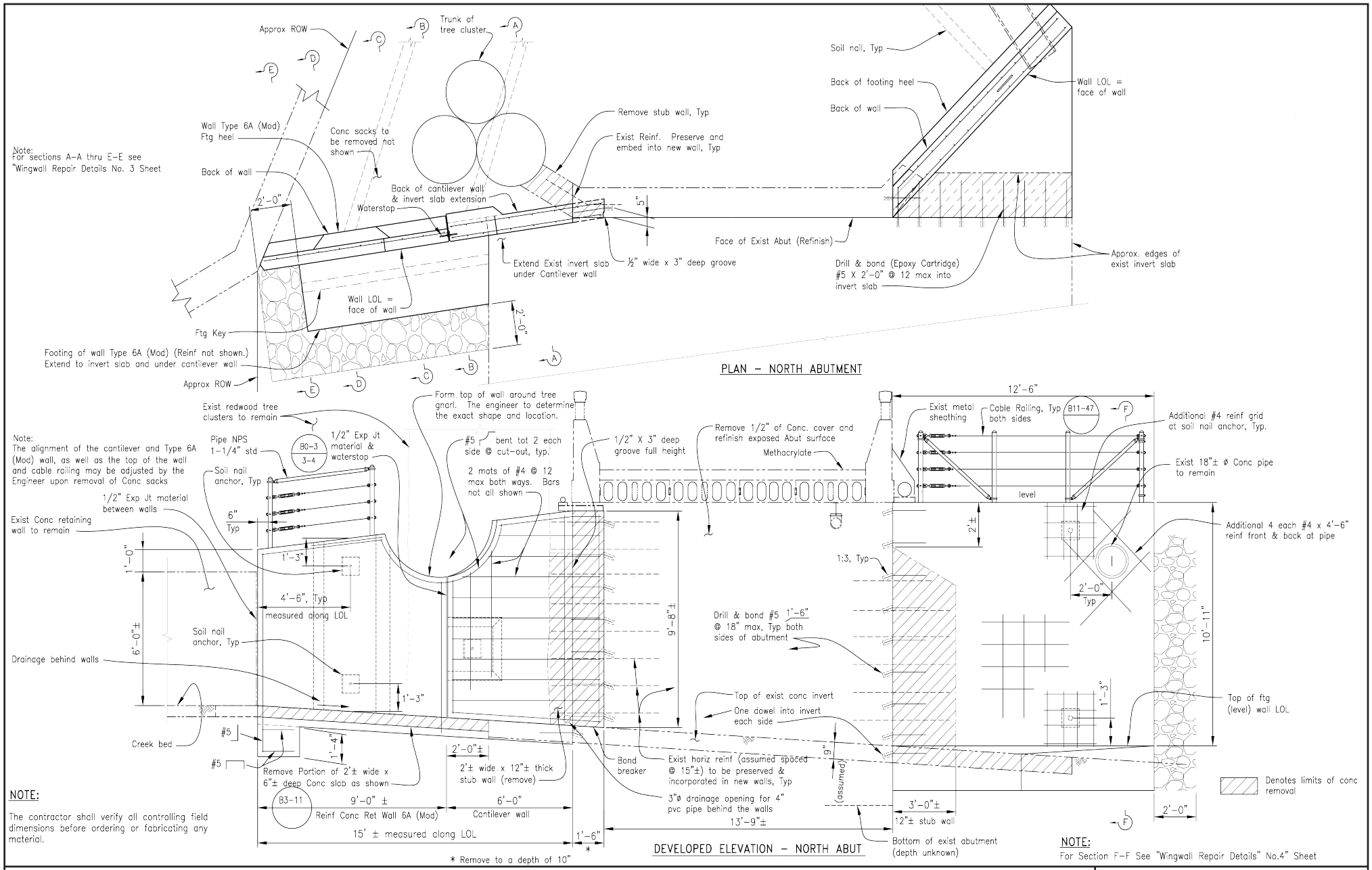

Figure 14. Canyon Road Bridge Repair Details

Bridge Preventive Maintenance Program
Town of Fairfax, California

wra Environmental Consultants

Date: December 2015
Source: CIC, Inc.

4.0 ENVIRONMENTAL FACTORS POTENTIALLY AFFECTED

The environmental factors checked below would be potentially affected by this project, involving at least one impact that is potentially significant unless mitigation is incorporated, as indicated by the checklist on the following pages.

☐	Aesthetics	☐	Greenhouse Gas Emissions	☐	Public Services
☐	Agricultural Resources	☐	Hazards and Hazardous Materials	☐	Recreation
☒	Air Quality	☒	Hydrology and Water Quality	☐	Transportation
☒	Biological Resources	☐	Land Use/Planning	☒	Tribal Cultural Resources
☒	Cultural Resources	☐	Mineral Resources	☐	Utilities / Service Systems
☐	Energy	☒	Noise	☐	Wildfire
☒	Geology and Soils	☐	Population and Housing	☒	Mandatory Findings of Significance

4.1 Determination

On the basis of this initial evaluation:

☐ I find that the project COULD NOT have a significant effect on the environment and a NEGATIVE DECLARATION will be prepared.

☒ I find that although the project could have a significant effect on the environment, there will not be a significant effect in this case because revisions in the project have been made by or agreed to by the project proponent. A MITIGATED NEGATIVE DECLARATION will be prepared.

☐ I find that the project MAY have a significant effect on the environment, and an ENVIRONMENTAL IMPACT REPORT is required.

☐ I find that the project MAY have a "Potentially significant impact" or "potentially significant unless mitigated" impact on the environment, but at least one effect 1) has been adequately analyzed in an earlier document pursuant to applicable legal standards, and 2) has been addressed by mitigation measures based on the earlier analysis as described on attached sheets. An ENVIRONMENTAL IMPACT REPORT is required, but it must analyze only the effects that remain to be addressed.

☐ I find that although the project could have a significant effect on the environment, because all potentially significant effects (a) have been analyzed adequately in an earlier EIR or NEGATIVE DECLARATION pursuant to applicable standards, and (b) have been avoided or mitigated pursuant to that earlier EIR or NEGATIVE DECLARATION, including revisions or mitigation measures that are imposed upon the proposed project, nothing further is required.

Kristin Arnold _____ 1/12/2026 _____

Signature **Date**

Name and Title: Kristin Arnold, Public Works Director

4.2 Initial Study Checklist

This section describes the existing environmental conditions in and near the project sites and evaluates environmental impacts associated with the proposed project. The environmental checklist, as recommended in Appendix G of the CEQA Guidelines, was used to identify environmental impacts that could occur if the proposed project is implemented.

Each of the environmental categories was fully evaluated, and one of the following four determinations was made for each checklist question:

> **"No Impact"** means that no impact to the resource would occur as a result of implementing the project.
>
> **"Less than Significant Impact"** means that implementation of the project would not result in a substantial and/or adverse change to the resource, and no mitigation measures are required.
>
> **"Less than Significant with Mitigation Incorporated"** means that the incorporation of one or more mitigation measures is necessary to reduce the impact from potentially significant to less than significant.
>
> **"Potentially Significant Impact"** means that there is either substantial evidence that a project-related effect may be significant, or, due to a lack of existing information, could have the potential to be significant.

4.2.1 Aesthetics

Would the project:	Potentially Significant Impact	Less-than-Significant Impact with Mitigation Incorporated	Less-than-Significant Impact	No Impact
a) Have a substantial adverse effect on a scenic vista?	☐	☐	☒	☐
b) Substantially damage scenic resources, including, but not limited to, trees, rock outcroppings, and historic buildings within a state scenic highway?	☐	☐	☐	☒
c) In non-urbanized areas, substantially degrade the existing visual character or quality of public views of the site and its surroundings? (Public views are those that are experienced from publicly accessible vantage point). If the Project is in an urbanized area, would the Project conflict with applicable zoning and other regulations governing scenic quality?	☐	☐	☒	☐
d) Create a new source of substantial light or glare which would adversely affect day or nighttime views in the area?	☐	☐	☒	☐

ENVIRONMENTAL SETTING

The project sites consist of three existing bridges proposed to undergo preventive maintenance repairs through the BPMP. Two of the bridges, on Marin Road and Spruce Road, are within a few blocks of each other, while the third creek crossing, Canyon Road Bridge, is approximately 2.35 miles away from the other two (Figure 1). All three project sites are located within Marin County, which does not have any officially designated state or county scenic highways (California Department of Transportation [Caltrans] 2018).

Marin Road Bridge

The Marin Road Bridge is about 0.6 miles north-northwest of the downtown center of Fairfax. The bridge spans Fairfax Creek at a location about 135 feet west of Sir Francis Drake Blvd. Motorists and pedestrians along portions of Marin Road, Bothin Road, and Sir Francis Drake Boulevard have views of the Marin Road Bridge site. Views in all directions from public areas adjacent to the project site include vegetation within and along the creek, single-family residential homes, pedestrian facilities and a bus stop. The Fairfax Creek channel flows immediately north and south, as well as under the project site.

Spruce Road Bridge

The Spruce Road Bridge is about 0.25 miles northwest of the downtown center of Fairfax. The bridge spans Fairfax Creek at the intersection of Spruce Road and Arroyo Road. Motorists and

pedestrians along portions of Arroyo Road and Spruce Road have views of the Spruce Road Bridge site. Views looking all directions from public viewing areas adjacent to the project site include vegetation within and along the creek, single-family residential homes and a multi-family complex. The Fairfax Creek channel flows immediately north and south, as well as under the project site.

Canyon Road Bridge

Canyon Road Bridge is located approximately 1.3 miles southwest of the downtown center of Fairfax. The bridge spans San Anselmo Creek at a location about 275 feet south of Cascade Drive. Motorists and pedestrians along portions of Canyon Road have views of the Canyon Road Bridge site. Views looking in all directions from the project site consist of vegetation within and along the creek and single-family residential homes. San Anselmo Creek flows immediately west and east, as well as under the project area.

DISCUSSION OF IMPACTS

a) Have a substantial adverse effect on a scenic vista?

Less-than-Significant Impact

A scenic vista is defined as a vantage point with a broad and expansive view of a significant landscape feature (e.g., a mountain range, the Bay, lake, or coastline) or of a significant historical or architectural feature. The three project sites are within developed areas of the Town of Fairfax. The project sites are generally surrounded by residential uses and are only visible from nearby residences and local roadways. During construction, views of the project sites would temporarily be impacted by the presence of construction equipment and materials on-site. However, the project sites are not visible from any scenic vistas and are not considered scenic resources by any local policy or ordinance. Therefore, this temporary placement of construction equipment and materials on-site would not constitute an adverse effect on a scenic vista. Once construction is finished, all materials and equipment would be removed from the sites and views of the site would remain similar to pre-project conditions. Therefore, the project would not have a substantial adverse effect on a scenic vista. The impact would be less than significant.

b) Substantially damage scenic resources, including, but not limited to, trees, rock outcroppings, and historic buildings within a state scenic highway?

No Impact

There are no officially designated or eligible state scenic highways within the vicinity of the project sites (Caltrans 2018). The nearest eligible state scenic highway is U.S. Route 101, located approximately seven miles from the Town of Fairfax. Therefore, the project would not damage any scenic resources within a state scenic highway. No impact would occur.

c) In non-urbanized areas, substantially degrade the existing visual character or quality of public views of the site and its surroundings? If the project is in an urbanized area, would the project conflict with applicable zoning and other regulations governing scenic quality?

Less-than-Significant Impact

During the construction phase, views of the material stored in the project sites, construction equipment, and stockpiled soil would be available for brief periods. The proposed project includes repairs to three existing bridges in Fairfax. For the Marin Road Bridge, these repairs include reconnecting, resurfacing, and repairing cracks in the wingwalls, replacing rock slope protection, and patching damaged concrete. For the Spruce Road Bridge, these repairs include sealing the deck with a concrete polyester overlay, replacing expansion joints, and patching soffit spalls. For the Canyon Road Bridge, these repairs include replacing the existing concrete stack wingwall with a reinforced concrete wingwall, reinforcing the north abutment, replacement and extension of the northeast wingwall, and sealing cracks on the deck. Therefore, there are no new structural changes proposed to the existing bridges, rather repairs and replacements of existing features that would maintain the visual character of the existing bridges. Views of the project sites would be similar to existing conditions, and impacts would be less than significant.

d) Create a new source of substantial light or glare which would adversely affect day or nighttime views in the area?

Less-than-Significant Impact

The project would not create a new permanent source of light or glare. The proposed project would involve preventive maintenance repairs of three existing bridges and does not propose new lighting structures to be added. Construction activities would be limited to regular daylight work hours, with the exception of one nighttime operation at Canyon Road Bridge. This nighttime operation would include a single night of construction work consisting of four hours of active work from 8 pm to 12 am followed by four to six hours of inactive curing time for the bridge deck seals. The active work period would require the use of lighting equipment, while the inactive work would not. This nighttime lighting from approximately 8 pm to 12 am could cause glare, potentially affecting residents in the immediate vicinity. To reduce glare from lighting used during nighttime construction activities, Caltrans would require project contractors to direct lighting onto the immediate area under construction only and to avoid shining lights towards residences. Therefore, impacts related to light and glare would be less than significant.

4.2.2 Agricultural and Forestry Resources

Would the project:	Potentially Significant Impact	Less-than-Significant Impact with Mitigation Incorporated	Less-than-Significant Impact	No Impact
a) Convert Prime Farmland, Unique Farmland, or Farmland of Statewide Importance (Farmland), as shown on the maps prepared pursuant to the Farmland Mapping and Monitoring Program of the California Resources Agency, to non-agricultural use?	☐	☐	☐	☒
b) Conflict with existing zoning for agricultural use, or a Williamson Act contract?	☐	☐	☐	☒
c) Conflict with existing zoning for, or cause rezoning of, forest land (as defined in Public Resources Code section 12220(g)), timberland (as defined by Public Resources Code section 4526), or timberland zoned Timberland Production (as defined by Government Code section 51104(g))?	☐	☐	☐	☒
d) Result in the loss of forest land or conversion of forest land to non-forest use?	☐	☐	☐	☒
e) Involve other changes in the existing environment, which, due to their location or nature, could result in conversion of Farmland, to non-agricultural use or conversion of forest land to non-forest use?	☐	☐	☐	☒

ENVIRONMENTAL SETTING

The project sites do not contain any farmland or forestry land and are not designated for agricultural or forestry uses or Prime, Statewide, or Locally Important Farmland (California Department of Conservation 2025). The proposed project is located in a semi-developed area and follows existing roads, easements, and rights-of-way. Surrounding land for all three project sites is developed with residential and open space uses.

DISCUSSION OF IMPACTS

a) Convert Prime Farmland, Unique Farmland, or Farmland of Statewide Importance (Farmland), as shown on the maps prepared pursuant to the Farmland Mapping and Monitoring Program of the California Resources Agency, to non-agricultural use?

No Impact

According to the 2010 Farmland Mapping and Monitoring Program from the State Department of Conservation, the project sites are located in areas that are designated as urban and built-up

land and the proposed project would, therefore, not convert Prime Farmland, Unique Farmland, or Farmland of Statewide importance to a non-agricultural use. No impact on would occur.

b) Conflict with existing zoning for agricultural use, or a Williamson Act contract?

No Impact

The project sites are not zoned for agricultural use or under a Williamson Act contract. Therefore, no conflicts are anticipated. No impact would occur.

c) Conflict with existing zoning for, or cause rezoning of, forest land (as defined in Public Resources Code Section 12220(g)), timberland (as defined by Public Resources Code Section 4526), or timberland zoned Timberland Production (as defined by Government Code Section 51104(g))?

No Impact

The project sites are not on any land zoned for forest land, timberland or timberland zoned Timberland Production. Therefore, the project would have no impact.

d) Result in a loss of forest land or conversion of forest land to non-forest use?

No Impact

The project sites are not located on forest land. Therefore, the proposed project would not result in the loss or conversion of forest land to non-forest use. No impact would occur.

e) Involve other changes in the existing environment which, due to their location or nature, could result in conversion of Farmland to non-agricultural use or conversion of forest land to non-forest use?

No Impact

The proposed project involves the construction and maintenance of existing infrastructure within already developed areas that do not include any farmland. Therefore, the proposed project would not result in the conversion of forest land or farmland to a non-forest use or a non-agricultural use and would thus have no impact on forestry or agricultural resources.

4.2.3 Air Quality

Where available, the significance criteria established by the applicable air quality management or air pollution control district may be relied upon to make the following determinations:

Would the project:	*Potentially Significant Impact*	*Less-than-Significant Impact with Mitigation Incorporated*	*Less-than-Significant Impact*	*No Impact*
a) Conflict with or obstruct implementation of the applicable air quality plan?	☐	☐	☒	☐
b) Result in a cumulatively considerable net increase of any criteria pollutant for which the project region is in non-attainment under an applicable federal or state ambient air quality standard?	☐	☒	☐	☐
c) Expose sensitive receptors to substantial pollutant concentrations?	☐	☐	☒	☐
d) Result in other emissions (such as those leading to odors) affecting a substantial number of people?	☐	☐	☒	☐

ENVIRONMENTAL SETTING

The project sites are located in the Town of Fairfax, which is in the San Francisco Bay Area Air Basin (SFBAAB). The Bay Area Air Quality Management District (BAAQMD) is the regional agency tasked with managing air quality in the region. The California Air Resources Board (CARB), a part of the California Environmental Protection Agency (EPA), oversees regional air district activities and regulates air quality at the State level. The BAAQMD has published the CEQA Air Quality Guidelines that are used in this assessment to evaluate air quality impacts of the Project (BAAQMD 2022). The 2017 Clean Air Plan (CAP) is the most current air quality management plan developed and adopted by BAAQMD.

Ambient Air Quality and Climate

The Bay Area has a Mediterranean climate characterized by wet winters and dry summers. During the summer, a high-pressure cell centered over the northeastern Pacific Ocean results in stable meteorological conditions and a steady northwesterly wind flow that generally keeps storms from affecting the California coast. During the winter, the Pacific high-pressure cell weakens, resulting in increased precipitation and the occurrence of storms. The highest air pollutant concentrations in the Bay Area generally occur during inversions, when a surface layer of cooler air becomes trapped beneath a layer of warmer air. An inversion reduces the amount of vertical mixing and dilution of air pollutants in the cooler air near the surface.

Air Pollutants of Concern

The CARB and U.S. EPA focus on the following air pollutants as regional indicators of ambient air quality:

- Ozone
- Coarse particulate matter (PM_{10})
- Fine particulate matter ($PM_{2.5}$)
- Nitrogen dioxide
- Carbon monoxide
- Sulfur dioxide
- Lead

Because these are the most prevalent air pollutants known to be harmful to human health based on extensive criteria documents, they are referred to as "criteria air pollutants." In the SFBAAB, the primary criteria air pollutants of concern are ground-level ozone formed through reactions of oxides of nitrogen oxides (NO_x) and reactive organic gases (ROG), PM_{10}, and $PM_{2.5}$. Regional air pollutants, such as ozone, PM_{10}, and $PM_{2.5}$, can be formed and/or transported over long distances and affect ambient air quality far from the emissions source. The magnitude and location of specific health effects from exposure to increased ozone, PM_{10}, and $PM_{2.5}$ concentrations are the result of emissions generated by numerous sources throughout the SFBAAB, as opposed to a single project.

Localized air pollutants generally dissipate with distance from the emission source and can pose a health risk to nearby populations. Toxic air contaminants (TACs), such as diesel particulate matter (DPM), are considered localized pollutants. $PM_{2.5}$ is also considered a localized air pollutant, in addition to being considered a regional air pollutant. Air dispersion models can be used to reliably quantify the health risks to nearby receptors associated with emissions of localized air pollutants from an individual project.

REGULATORY SETTING

Federal and State Regulations

The U.S. EPA is responsible for implementing the programs established under the Federal Clean Air Act, such as establishing and reviewing the National Ambient Air Quality Standards (NAAQS) and judging the adequacy of State Implementation Plans to attain the NAAQS. A State Implementation Plan must integrate federal, state, and local plan components and regulations to identify specific measures to reduce pollution in nonattainment areas, using a combination of performance standards and market-based programs. If a state fails to enforce its implementation of approved regulations, or if the EPA determines that a State Implementation Plan is inadequate, the EPA is required to prepare and enforce a Federal Implementation Plan to promulgate comprehensive control measures for a given State Implementation Plan.

The CARB is responsible for establishing and reviewing the California Ambient Air Quality Standards (CAAQS), developing and managing the California State Implementation Plans, identifying TACs, and overseeing the activities of regional air quality management districts. In California, mobile emissions sources (e.g., construction equipment, trucks, and automobiles) are regulated by CARB and stationary emissions sources (e.g., industrial facilities) are regulated by the regional air quality management districts.

In accordance with the Federal Clean Air Act and California Clean Air Act, areas in California are classified as either in attainment, maintenance (i.e., former nonattainment), or nonattainment of the NAAQS and CAAQS for each criteria air pollutant. To assess the regional attainment status, the BAAQMD collects ambient air quality data from over 30 monitoring sites within the SFBAAB (BAAQMD 2017a). Based on current monitoring data, the SFBAAB is designated as a nonattainment area for ozone, PM_{10} (CAAQS only), and $PM_{2.5}$, and is designated an attainment or unclassified area for all other pollutants. The BAAQMD is primarily responsible for ensuring that the NAAQS and CAAQS are attained and maintained in the SFBAAB. The BAAQMD fulfills this responsibility by adopting and enforcing rules and regulations concerning air pollutant sources, issuing permits, inspecting stationary sources of air pollutants, responding to citizen complaints, and monitoring ambient air quality and meteorological conditions.

BAAQMD Screening Criteria

The BAAQMD has established screening criteria to determine whether individual projects could result in potentially significant criteria air pollutant and precursor emissions, which are described in Section 4 of the BAAQMD 2022 CEQA Guidelines (BAAQMD 2022). Preliminary screening for construction and operational criteria provides lead agencies with a conservative indication of whether a project would result in the generation of criteria air pollutants or precursors that exceed the BAAQMD thresholds significance. If all screening criteria for criteria air pollutants and precursors are met by a proposed project, then the lead agency need not perform a detailed assessment of the project's criteria air pollutant and precursor emissions.

Table 4-1 of the BAAQMD CEQA Guidelines contains single land use construction and operational criteria air pollutant and precursor screening levels for various land use categories. For operational emissions, it is assumed that projects would result in a less-than-significant impact related to criteria air pollutants and precursor emissions if: 1) the project size is at or below the operational screening level size for the applicable land use category (contained in Table 4-1 of the BAAQMD CEQA Guidelines); 2) operational activities would not include stationary engines and industrial sources subject to BAAQMD rules and regulations; and 3) operational activities would not overlap with construction activities. For construction emissions, it is assumed that projects would result in a less-than-significant impact related to criteria air pollutants and precursors if: 1) the project size is below the applicable screening level shown in Table 4-1; 2) all BAAQMD-recommended BMPs are included in the project design and implemented during construction, 3) construction-related activities would not overlap with operational activities; and 4) construction-related activities would not include demolition, simultaneous occurrence of two or more construction phases, extensive site preparation, extensive material transport, or stationary sources subject to BAAQMD rules and regulations.

DISCUSSION OF IMPACTS

a) Conflict with or obstruct implementation of the applicable air quality plan?

Less-than-Significant Impact

The BAAQMD's 2017 CAP is the applicable air quality plan for projects located in the SFBAAB (BAAQMD 2017b). Consistency may be determined by evaluating whether the project supports the primary goals of the 2017 CAP, including applicable control measures contained within the plan, and would not conflict with or obstruct implementation of any of the control measures.

The primary goals of the 2017 CAP are the attainment of ambient air quality standards and reduction of population exposure to air pollutants for the protection of public health in the Bay Area. Because the project would not result in any significant and unavoidable air quality impacts related to emissions, ambient concentrations, or public exposures (see discussions below), the project would support the primary goals of the 2017 CAP.

The control measures from the 2017 CAP, which aim to reduce air pollution and greenhouse gases (GHGs) from stationary, area, and mobile sources, are organized into nine categories. As described in Table 1, the project would be consistent with the applicable control measures from the 2017 CAP. Therefore, the project would not conflict with or obstruct implementation of the applicable air quality plan, and the impact would be less than significant.

Table 1. Project Consistency with BAAQMD 2017 Clean Air Plan

CONTROL MEASURES	PROJECT CONSISTENCY
Stationary Sources	**Not applicable**. The stationary source measures, which are designed to reduce emissions from stationary sources, are incorporated into rules adopted by the BAAQMD and then enforced by the BAAQMD's Permit and Inspection programs. Because the project would not include new stationary sources, the stationary source control measures are not applicable to the project.
Transportation	**Not applicable**. The transportation control measures are designed to reduce vehicle trips, use, miles traveled, idling, or traffic congestion for the purpose of reducing vehicle emissions. Operation of the project would not generate any additional vehicle trips compared to the existing conditions. Therefore, the transportation control measures of the 2017 CAP are not applicable to the project.
Energy	**Not applicable**. The energy control measures are designed to reduce emissions of criteria air pollutants, TACs, and GHGs by decreasing the amount of electricity consumed in the Bay Area, as well as decreasing the carbon intensity of the electricity used by switching to less GHG-intensive fuel sources for electricity generation. Since these measures apply to electrical utility providers and local government agencies (and not individual projects), the energy control measures of the 2017 CAP are not applicable to the project.
Buildings	**Not applicable**. The BAAQMD has authority to regulate emissions from certain sources in buildings such as boilers and water heaters but has limited authority to regulate buildings themselves. Therefore, the building control measures focus on working with local governments that have authority over local building codes to facilitate adoption of best GHG control practices and policies. Since the project does not include any building construction, the building control measures of the 2017 CAP are not applicable to the project.
Agriculture	**Not applicable**. The agriculture control measures are designed primarily to reduce emissions of methane. Since the project does not include any agricultural activities, the agriculture control measures of the 2017 CAP are not applicable to the project.
Natural and Working Lands	**Not applicable**. The control measures for the natural and working lands sector focus on increasing carbon sequestration on rangelands and wetlands, as well as encouraging local governments to adopt ordinances that promote urban tree plantings. Since the project does not include the disturbance of any rangelands or wetlands, the natural and working lands control measures of the 2017 CAP are not applicable to the project.
Waste Management	**Consistent.** The waste management measures focus on reducing or capturing methane emissions from landfills and composting facilities, diverting organic materials away from landfills, and increasing waste diversion rates through efforts to reduce, reuse, and recycle. The project would comply with local requirements for waste management. Therefore, the project would be consistent with the waste management control measures of the 2017 CAP.

CONTROL MEASURES	PROJECT CONSISTENCY
Water	**Consistent**. The water control measures to reduce emissions from the water sector will reduce emissions of criteria pollutants, TACs, and GHGs by encouraging water conservation, limiting GHG emissions from publicly owned treatment works, and promoting the use of biogas recovery systems. The project would implement BMPs for water quality protection and would not result in a long-term increase in water use. Therefore, the project would be consistent with the water control measures of the 2017 CAP.
Super GHGs	**Not applicable**. The super-GHG control measures are designed to facilitate the adoption of best GHG control practices and policies through the BAAQMD and local government agencies. Since these measures do not apply to individual projects, the super-GHG control measures of the 2017 CAP are not applicable to the project.

Source: BAAQMD, 2017b

b) Result in a cumulatively considerable net increase of any criteria pollutant for which the project region is non-attainment under an applicable federal or state ambient air quality standard?

Less-than-Significant Impact with Mitigation Incorporated

The project sites are located within the SFBAAB which is under the jurisdiction of the BAAQMD. The SFBAAB is designated as a nonattainment area for ozone and $PM_{2.5}$ under both NAAQS and CAAQS (BAAQMD 2017a). The SFBAAB is also designated as nonattainment for PM_{10} under CAAQS, but not NAAQS (BAAQMD 2017b). The BAAQMD's 2022 CEQA Air Quality Guidelines provide screening criteria for determining if an individual project could result in significant construction-related impact relative to criteria pollutants and precursor emissions. Criteria air pollutants and precursors include reactive organic gases, nitrogen oxides, PM_{10}, $PM_{2.5}$, and carbon monoxide. In accordance with the BAAQMD's 2022 CEQA Air Quality Guidelines (BAAQMD 2022), construction activities would have a less-than-significant impact on air quality if the following screening criteria are met:

1. The project site is below the applicable screening level size shown in Table 4-1 of the BAAQMD 2022 CEQA Air Quality Guidelines;
2. All best management practices are included in the project design and implementation during construction; and
3. Construction-related activities would not include any of the following:
   - Demolition;
   - Simultaneous occurrence of more than two construction phases;
   - Extensive site preparation; or
   - Extensive material transport (e.g., soil import and export requiring a considerable amount of haul truck activity); or
   - Stationary resources (e.g., backup generators) subject to Air District rules and regulations.

Relative to screening criteria, the BAAQMD CEQA Air Quality Guidelines do not include specific screening level size for infrastructure and habitat enhancement projects; however, a general comparison can be made to other similar land uses. For example, detailed air quality assessments are not required for construction of projects such as single-family residential developments comprised of less than 254 dwelling units, city parks that are less than 10 acres in size, industrial facilities that are less than 452,000 square feet, and construction of office and commercial buildings that are less than 452,000 square feet (BAAQMD 2022). In comparison, project construction activities would not involve a larger fleet of earthmoving equipment or substantial off-hauling than traditional land use projects would, would not include the construction of buildings, and the total disturbance area at each project site would be less than one acre, which is well below the screening criteria for other types of land use projects. In addition, project construction would be short in duration, lasting less than 20 days at each project site.

Project-related construction activities would not involve the simultaneous occurrence of more than two construction phases or require construction of more than one land-use type. Construction would not involve extensive site preparation or material transport. The project would result in a short-term increase in fugitive dust emissions from vehicles accessing the sites during construction which would include PM_{10} and $PM_{2.5}$. The BAAQMD does not have a quantitative threshold of significance for fugitive dust PM_{10} and $PM_{2.5}$ emissions; however, the BAAQMD considers implementation of dust control measures during construction sufficient to reduce air quality impacts from fugitive dust to a less-than-significant level. Therefore, Mitigation Measure AIR-1 would be implemented, which includes BAAQMD-recommended measures for fugitive dust control, in order to avoid significant impacts associated with fugitive dust. Measures would include actions such as covering exposed soils, limiting vehicle speeds on unpaved roadways, and watering exposed surfaces daily. Implementation of this measure would ensure that construction activities would not result in a cumulatively considerable net increase in criteria air pollutants for which the region is in nonattainment. The impact of project construction would be less than significant with mitigation incorporated.

Operation of the project would not result in any increase in emissions. No impact would occur from project operation.

c) Expose sensitive receptors to substantial pollutant concentrations?

Less-than-Significant Impact

The primary sensitive receptors in the vicinity are residents, which may include children, elderly people, or people with respiratory illnesses. Sensitive receptors are located in close proximity to several locations along the construction area. The main pollutant of concern for this threshold is DPM, which is emitted from construction equipment and heavy-duty truck traffic. Construction activities at the project site would take approximately 60 working days and no prolonged or intense construction activity would occur. Construction equipment and heavy-duty truck operation associated with construction activities generate TACs in the form of diesel exhaust and fugitive dust. There are sensitive receptors (i.e., residences) located within 100 feet of the project site. However, due to the short-term nature of construction activities, any increase in DPM and TAC emissions within the project sites would be temporary. The Office of Environmental Health Hazard Assessment (OEHHA) does not recommend assessing cancer risk for projects lasting less than two months at the maximally exposed individual resident (OEHHA 2015). Therefore, a

detailed Health Risk Assessment was not prepared for this project, and the impact is assumed to be less than significant.

d) Result in other emissions (such as those leading to odors) adversely affecting a substantial number of people?

Less-than-Significant Impact

BAAQMD's CEQA Guidelines identify the following as potential sources of objectionable odors: wastewater treatment plants, landfills, confined animal facilities, composting stations, food manufacturing plants, refineries, and chemical plants. The proposed project does not involve construction of any of those types of facilities. Construction activities would involve the use of diesel-powered equipment that emits exhaust gases and particulate matter, which can have objectionable odors. However, construction equipment is mobile (dispersing and diluting pollutants over a wider area than if they were fixed in place). Similar to emissions leading to odors, the project would not result in other emissions affecting a substantial number of people. Thus, impacts would be less than significant.

MITIGATION MEASURES

Mitigation Measure AIR-1. Fugitive Dust Control Measures

The project shall implement BMPs as recommended by the BAAQMD 2022 CEQA Air Quality Guidelines, which include the following measures:

- All exposed surfaces (e.g., parking areas, staging areas, soil piles, graded areas, and unpaved access roads) shall be watered two times per day.
- All haul trucks transporting soil, sand, or other loose material off-site shall be covered.
- All visible mud or dirt track-out onto adjacent public roads shall be removed using wet power vacuum street sweepers at least once per day. The use of dry power sweeping is prohibited.
- All vehicle speeds on unpaved roads shall be limited to 15 mph.
- All roadways, driveways, and sidewalks to be paved shall be completed as soon as possible. Building pads shall be laid as soon as possible after grading unless seeding or soil binders are used.
- Idling times shall be minimized either by shutting equipment off when not in use or reducing the maximum idling time to 5 minutes (as required by the California airborne toxics control measure Title 13, Section 2485 of California Code of Regulations [CCR]). Clear signage shall be provided for construction workers at all access points.
- All construction equipment shall be maintained and properly tuned in accordance with the manufacturers' specifications. All equipment shall be checked by a certified mechanic and determined to be running in proper condition prior to operation.

4.2.4 Biological Resources

Would the project:	Potentially Significant Impact	Less-than-Significant Impact with Mitigation Incorporated	Less-than-Significant Impact	No Impact
a) Have a substantial adverse effect, either directly or through habitat modifications, on any species identified as a candidate, sensitive, or special-status species in local or regional plans, policies, or regulations, or by the California Department of Fish and Game or U.S. Fish and Wildlife Service?	☐	☒	☐	☐
b) Have a substantial adverse effect on any riparian habitat or other sensitive natural community identified in local or regional plans, policies, or regulations or by the California Department of Fish and Game or U.S. Fish and Wildlife Service?	☐	☒	☐	☐
c) Have a substantial adverse effect on state or federally protected wetlands (including, but not limited to, marsh, vernal pool, coastal, etc.) through direct removal, filling, hydrological interruption, or other means?	☐	☐	☐	☒
d) Interfere substantially with the movement of any native resident or migratory fish or wildlife species or with established native resident or migratory wildlife corridors, or impede the use of native wildlife nursery sites?	☐	☒	☐	☐
e) Conflict with any local policies or ordinances protecting biological resources, such as a tree preservation policy or ordinance?	☐	☐	☒	☐
f) Conflict with the provisions of an adopted Habitat Conservation Plan, Natural Community Conservation Plan, or other approved local, regional, or state habitat conservation plan?	☐	☐	☐	☒

ENVIRONMENTAL SETTING

Three separate Natural Environment Studies (NESs) were conducted on each bridge included in the Fairfax BPMP Project. All three bridges, Marin Road, Spruce Road and Canyon Road were determined to need preventive maintenance work. The NESs prepared identify the biological

resources that are present at each project site. Each study is included in Appendix B for reference and discussed below:

Assessment Methodology

A similar methodology was used for each NES. WRA, Inc. (WRA) and Kelly Biological Consulting jointly prepared the studies using a combination of database searches and on-site surveys. Database searches were conducted prior to on-site surveys to determine which special-status plant and wildlife species have been documented to occur in the vicinity of the project site.

The studies included a biological resources assessment, special-status plant surveys, and a delineation of Section 404 jurisdictional areas within the proposed Biological Study Areas (BSAs) for inclusion in the BPMP. The BSAs were examined on foot to determine (1) vegetation communities present, (2) if existing conditions provide suitable habitat for any special-status plant or wildlife species that have a potential to occur within the vicinity of the project site, and (3) the presence of potential jurisdictional wetlands and "other waters" within the project site.

Marin Road Bridge

Biological Study Area

The BSA is located on and around the Marin Road Bridge over Fairfax Creek in Fairfax. Marin Road is a local residential road. The study covers the areas where the proposed project-related direct or indirect actions such as ground-disturbing, construction, staging, or access activities would occur and goes beyond that to ensure that key biological issues are addressed. Marin Road is a local road in a suburban developed area. The adjacent land use is residential (single family homes). The area of study extends up and downstream from the bridge along the stream corridor covering the primary natural area.

Site elevations range from approximately 100 to 200 feet NAVD88. The bridge is located on the San Rafael USGS 7.5-minute quadrangle map at latitude W37.993453, longitude N122.594695.

Biological Communities

Ruderal Disturbed/Developed: The majority of the project site is Ruderal Disturbed/Developed habitat and includes pavement (Marin Road and driveways), gravel and dirt roadsides, structures (homes and outbuildings), backyards, and landscaping or bare areas. In the areas that are not landscaped, the vegetation is predominately non-native species commonly found in the region, such as English ivy (*Hedera helix*), big leaf periwinkle (*Vinca major*), and non-native grasses and forbs.

Riparian Woodland: An open canopy riparian woodland loosely similar to Box-Elder Forest (*Acer Negundo* Forest Alliance) (G5, S2.2) follows a narrow route through the project site. The Box-Elder Forest's G5, S2.2 ranking indicates that it is a natural community of special concern (sensitive) at the state level, though more common in other regions. Within this habitat in the project site, the overstory species include box elder and white alder (*Alnus rhombifolia*). Dense box elder shrubs have colonized the bank that is north of the bridge. The herbaceous/vine layer is comprised mainly of English ivy and Himalayan blackberry (*Rubus armeniacus*), and scattered grasses and forbs including panic veldtgrass (*Ehrharta erecta*) and miner's lettuce (*Claytonia perfoliata*).

Perennial Stream ("Other Waters"): Fairfax Creek is a perennial creek. Flows vary with the rainfall patterns of a given season. It is supported by a local watershed, generally, the western part of Fairfax and adjacent open space lands. The creek substrate is a mix of small gravel to larger cobble and rock. Indicators of the ordinary high water (OHW) mark include the slope change at the bed and earthen bank junction and wrack at the edge of the creek bed. The channel width at the OHW mark was used to determine the stream ("other waters") boundary. The creek is not included on the National System of Wild and Scenic Rivers published by the U.S. Department of the Interior. There are no wetlands in the project site. The bridge has a concrete headwall and sidewalls, as well as wingwalls on the upstream and downstream banks. Just upstream of the bridge there is a concrete retaining wall along the base of the northwest bank.

Unvegetated Bank: Under the bridge there is a small area above OHW mark, on the northeastern part of the bank that is unvegetated. This area is comprised of exposed bedrock, cobble, and dirt.

Wildlife Species

The BSA is situated within riparian and suburban habitat, and wildlife species known to occur in the vicinity include California scrub jay (*Aphelocoma californica*), acorn woodpecker (*Melanerpes formicivorus*), green heron (*Butorides virescens*), American crow (*Corvus brachyrhynchos*), and fox squirrel (*Sciurus niger*). The project site is located upstream of a total fish passage barrier at Bolinas Avenue. Fairfax Creek is not considered anadromous but does support non-anadromous native fish species.

Special-Status Species

Based on pre-survey database searches, it was determined that 69 special-status plant species and 95 special-status wildlife species have been documented in or have a range that occurs in the San Rafael, Bolinas, San Geronimo, Novato, Petaluma Point, San Quentin, San Francisco North, or Point Bonita 7.5-minute USGS quadrangles. Of these species, 21 special-status plant species and nine special-status wildlife species have documented occurrences within 5 kilometers (3 miles) of the BSA.

Special-Status Plant Species

Due to a lack of appropriate habitat elements (such as coastal salt marsh) and the presence of residential development in the surrounding landscape, the BSA has the potential to support only five of the previously identified special-status plant species:

- **Napa false indigo *(Amorpha californica* var. *napensis, CNPS 1B.2).*** Upland habitat within the project site could support this species. However, it may be too mesic in some areas and too disturbed other areas. This shrub species, which is easily identifiable, was not observed during the field surveys.
- **Western leatherwood *(Dirca occidentalis, CNPS 1B.2).*** The upland portion of the Riparian Woodland habitat within the project site could support this species. However, it may be too mesic in some areas and too disturbed other areas. This shrub species, which is easily identifiable, was not observed during the field surveys.
- **Marin checker lily *(Fritillaria lanceolata* var. *tristulis, CNPS 1B.1).*** Though not coastal, there is riparian habitat within the project site. No *Fritillaria* (a perennial bulbiferous herb) were observed during the field surveys, which were conducted during the flowering period.

- **Thin-lobed horkelia *(Horkelia tenuiloba, CNPS 1B.2, BLMS)*.** Limited poor quality, disturbed habitat present. No *Horkelia* were observed during the field surveys, which were conducted during the flowering period.
- **Tamalpais oak *(Quercus parvula* var. *tamalpaisensis, CNPS 1B.3)*.** Though uplands in the project site provide potential habitat, this species is a woody shrub, which would have been identifiable during the site visits. No shrub oaks were observed during the field surveys.

Although the project site at the Marin Road bridge contains potentially suitable habitat for the above species, no species were observed at the site during botanical surveys conducted during the appropriate flowering season. Given these surveys were conducted at an appropriate time of year and no special-status plant species were observed, it is unlikely that special-status plant species are present.

Special-Status Wildlife Species

Fairfax Creek within the Marin Road project site is listed as essential fish habitat (EFH) for Coho salmon (*Oncorhynchus kisutch*) and Chinook salmon (*O. tshawytscha*); however, neither species is considered present because the BSA is outside of both species' current or known ranges. Steelhead are prevented from entering Fairfax Creek because of a total barrier to anadromy located just upstream of the confluence with San Anselmo Creek.

Of the 95 special-status wildlife species documented to occur in the vicinity, five species have potential to occur within the project site. The remaining 90 species identified in are unlikely to occur within the project site because of existing conditions within and surrounding the project site. Roadways, residential development, creek channelization, and various anthropogenic disturbances reduce the amount of available breeding, rearing, and foraging habitat for most special-status species. Several habitat types or habitat conditions which are required to support special-status wildlife species are also absent from the project site.

Based on the habitat conditions present and documented range and occurrence information for special-status wildlife species, it was determined that the project contains potential habitat for five other special-status or protected wildlife species including: Allen's hummingbird (*Selasphorus sasin*), purple martin (*Progne subis*), olive-sided flycatcher (*Contopus cooperi*), oak titmouse (*Baeolophus inornatus*), and Nuttall's woodpecker (*Picoides nuttallii*). The project site also has potential to support non-special-status nesting birds. Special-status species with potential to occur in the BSA are discussed below:

- **Allen's hummingbird *(Selasphorus sasin, USFWS Bird of Conservation Concern)*.** Allen's hummingbird, common in many portions of its range, is a summer resident along the majority of California's coast and a year-round resident in portions of coastal southern California and the Channel Islands. Breeding occurs in association with the coastal fog belt, and typical habitats used include coastal scrub, riparian, woodland and forest edges, and eucalyptus and cypress groves. It feeds on nectar, as well as insects and spiders.
- **Purple martin *(Progne subis, CDFW Species of Special Concern)*.** The purple martin is an uncommon summer resident in California, occurring in woodlands and low-elevation hardwood and coniferous forest. It usually feeds on insects captured in flight 100-200 feet above ground. The purple martin nests in cavities often located in tall, isolated trees or snags in open forest or woodland.

- **Olive-sided flycatcher *(Contopus cooperi, CDFW Species of Special Concern, USFWS Bird of Conservation Concern).*** This species if found within the coniferous forest biome, most often associated with forest openings, forest edges near natural openings (e.g., meadows, canyons, or rivers) or human-made openings (e.g., harvest units), or open to semi-open forest stands (Altman and Sallabanks 2000).
- **Oak titmouse *(Baeolophus inornatus, USFWS Bird of Conservation Concern).*** This relatively common species is year-round resident throughout much of California including most of the coastal slope, the Central Valley and the western Sierra Nevada foothills. Its primary habitat is woodland dominated by oaks. Local populations have adapted to woodlands of pines and/or junipers in some areas (Cicero 2000). The oak titmouse nests in tree cavities, usually natural cavities or those excavated by woodpeckers, though they may partially excavate their own (Cicero 2000). Seeds and arboreal invertebrates make up the birds' diet.
- **Nuttall's woodpecker *(Picoides nuttallii, USFWS Bird of Conservation Concern).*** Nuttall's Woodpecker, common in much of its range, is a year-round resident throughout most of California west of the Sierra Nevada. Typical habitat is oak or mixed woodland, and riparian areas (Lowther 2000). Nesting occurs in tree cavities, principally those of oaks and larger riparian trees. Nuttall's woodpecker also occurs in older residential settings and orchards where trees provide suitable foraging and nesting habitat. This species forages on a variety of arboreal invertebrates.

Spruce Road Bridge

Biological Study Area

The BSA is located on and around the Spruce Road Bridge over Fairfax Creek in Fairfax. Spruce Road is a local residential road. The BSA covers the areas where the proposed project-related direct or indirect actions such as ground-disturbing, construction, staging, or access activities would occur and goes beyond that to ensure that key biological issues are addressed. Spruce Road is a local road in a suburban developed area. The adjacent land use is residential (single family homes). The BSA extends up and downstream from the bridge along the stream corridor covering the primary natural area.

Site elevations range from approximately 100 to 200 feet NAVD88. The bridge is located on the San Rafael USGS 7.5-minute quadrangle map at latitude W37.987790, longitude N122.593195.

Biological Communities

Ruderal Disturbed/Developed: The Ruderal Disturbed/Developed portion of the study area includes pavement (Spruce Road and driveways), gravel and dirt roadsides, structures (homes and outbuildings), backyards, and landscaping or bare areas. In the areas that are not landscaped, the vegetation is predominately non-native species commonly found in the region, such as privet (*Ligustrum japonicum*), English ivy (*Hedera helix*), goosegrass (*Galium aparine*), cut leaf geranium (*Geranium dissectum*), and non-native grasses.

Riparian Woodland: An open canopy woodland loosely similar to California Bay Forest Alliance (*Umbellaria californica* Alliance) follows a narrow path through the project site. This habitat is somewhat common in the northern California Coast region in moist areas. Within the project site, the overstory species include native species such as California bay, white alder (*Alnus rhombifolia*) and sycamore (*Platanus racemosa*), as well as non-natives such as black acacia

(*Acacia melanoxylon*), cherry plum (*Prunus cerasifera*) and firethorn (*Pyracantha* sp.). The herbaceous/vine layer is comprised mainly of English ivy and Himalayan blackberry (*Rubus armeniacus*), with some California man-root (*Marah fabacea*) and scattered grasses and forbs including panic veldtgrass (*Ehrharta erecta*) and miner's lettuce (*Claytonia perfoliata*).

Perennial Stream ("Other Waters"): Fairfax Creek is a perennial creek. Flows vary with the rainfall patterns of a given season. It is supported by a local watershed, generally, the western part of the Town of Fairfax and adjacent open space lands. The creek substrate is a mix of small gravel to larger cobble and rock. Indicators of the OHW mark include the slope change at the bed and earthen bank junction and wrack at the edge of the creek bed. The channel width at the OHW mark was used to determine the stream ("other waters") boundary. The creek is not included on the National System of Wild and Scenic Rivers published by the U.S. Department of the Interior. There are no wetlands in the project site. The banks under the bridge are concrete. Just upstream of the bridge on the northwest side is a concrete retaining wall along the base of the bank. The other banks are earthen.

Special-Status Species

Based on pre-survey database searches, it was determined 77 special-status plant species and 91 special-status wildlife species have been documented in or have a range that occurs in the San Rafael, Bolinas, San Geronimo, Novato, Petaluma Point, San Quentin, San Francisco North, or Point Bonita 7.5-minute USGS quadrangles. Of these species, 22 special-status plant species and three special-status wildlife species have documented occurrences within 8 kilometers (5 miles) of the BSA.

Special-Status Plant Species

Due to a lack of appropriate habitat elements and the presence of residential development in the surrounding landscape, the BSA has the potential to support only two of the previously identified special-status plant species.

- **Sonoma alopecurus *(Alopecurus aequalis var. sonomensis, FE, CNPS 1B.1).*** All known occurrences of this species in the vicinity of the Spruce Road Bridge are associated with coastal freshwater marsh and swamp, and riparian scrub. The site contains limited, poor quality habitat for this species.
- **Minute pocket moss *(Fissidens pauperculus, USFSS, CNPS 2B.2).*** Though not coniferous forest, mesic substrates within the Spruce Road Bridge site have limited potential to support this species.

Although the Spruce Road Bridge's surroundings contain potentially suitable habitat, no occurrences of either species were documented during site visits. Given site visits occurred during the appropriate blooming season, this indicates these species likely do not occur within the site.

Special-Status Wildlife Species

Fairfax Creek within the BSA is listed as EFH for coho salmon (*Oncorhynchus kisutch*) and Chinook salmon (*O. tshawytscha*); however, neither species is considered present because the site is outside of both species current or known ranges. A total barrier to anadromy in Fairfax Creek is located just upstream of the confluence with San Anselmo Creek and prevents steelhead from entering Fairfax Creek. Steelhead are not considered present within Fairfax Creek or the BSA because of this barrier.

Three special-status species of birds could potentially nest within the BSA. A brief discussion on these species is provided below. In addition to the special-status bird species, non-special-status birds have the potential to nest within the project site. Most native birds in the United States, including non-status species, are protected by the Migratory Bird Treaty Act (MBTA) of 1918. Under this legislation, destroying active nests, eggs, or young is illegal.

- **Allen's hummingbird *(Selasphorus sasin, USFWS Bird of Conservation Concern).*** Allen's hummingbird is found in a wide variety of habitats that provide nectar-producing flowers. The species is considered a common breeder throughout much of the San Francisco Bay area.
- **Oak titmouse *(Baeolophus inornatus, USFWS Bird of Conservation Concern).*** This relatively common species is year-round resident throughout much of California including most of the coastal slope, the Central Valley and the western Sierra Nevada foothills. Its primary habitat is woodland dominated by oaks. Local populations have adapted to woodlands of pines and/or junipers in some areas. The oak titmouse nests in tree cavities, usually natural cavities or those excavated by woodpeckers, though they may partially excavate their own. Seeds and arboreal invertebrates make up the birds' diet.
- **Nuttall's woodpecker *(Picoides nuttallii, USFWS Bird of Conservation Concern).*** Nuttall's woodpecker typically reside in lowland woodlands throughout California, west of the Sierra Nevada. This species is associated with intact oak and riparian woodlands, rarely in conifers, and is a primary cavity nester.

Canyon Road Bridge

Biological Study Area

The BSA is located on and around the Canyon Road Bridge over San Anselmo Creek in Fairfax. Canyon Road is a local residential road. The project site covers the areas where the proposed project-related direct or indirect actions such as ground-disturbing, construction, staging, or access activities would occur and goes beyond that to ensure that key biological issues are addressed. Canyon Road is a local road in a suburban developed area. The adjacent land use is residential (single family homes). The BSA extends up and downstream from the bridge along the stream corridor covering the primary natural area.

Site elevations range from approximately 100 to 200 feet NAVD88. The bridge is located on the San Rafael USGS 7.5-minute quadrangle map at latitude W37.975162, longitude N122.606451.

Biological Communities

Riparian Redwood Forest Association: The project site consists of mature semi-closed canopy forest similar to Redwood Forest Alliance more specifically a subset of that know as the Redwood Forest Association (*Sequoia sempervirens-Acer macrophyllum-Umbellaria californica* Association. This habitat is somewhat common in the northern California Coast region in moist areas. Within the project site, the overstory species include native tree species such as redwood (*Sequoia sempervirens*), big-leaf maple (*Acer macrophyllum*), and California bay (*Umbellularia californica*). The understory is sparse. There are few shrubs. The herbaceous/vine layer is comprised mainly of English ivy (*Hedera helix*) and Himalayan blackberry (*Rubus armeniacus*), with some California polypody (*Polypodium californicum*), and scattered grasses and forbs including panic veldtgrass (*Ehrharta erecta*) and white ramping fumitory (*Fumaria capreolata*).

Intermittent Stream ("Other Waters"): At this location, San Anselmo Creek is an intermittent creek with flows that vary with the rainfall patterns of a given season. The watershed that supports it is local, generally the western part of the Town of Fairfax and adjacent open space lands. Flows throughout the year range from the edges of the creek bed to minimal to absent flows but with a few remnant small pools. In addition to slope change at the bed and bank junction, wrack observed at the edge of the creek bed was used as an indication of OHW mark.

The creek substrate under the bridge (and immediately downstream of the bridge) consists of concrete and a metal fish ladder. The remaining areas upstream and downstream are a mix of small gravel to larger cobble. Downstream of the fish ladder are numerous chunks of concrete. The channel width at the OHW mark was used to determine the intermittent stream ("other waters") boundary. The creek is not included on the National System of Wild and Scenic Rivers published by the U.S. Department of the Interior. There are no wetlands in the project site. The banks under the bridge are concrete, just upstream of the bridge on the northwest side is a concrete sack retaining wall.

Ruderal Disturbed/Developed: The Ruderal Disturbed/Developed portion of the project site includes pavement (Canyon Road and driveways), the gravel and bare dirt roadsides, structures (homes and outbuildings), backyards, and landscaping or bare areas. In the areas that are not landscaped, the vegetation is predominately non-native species commonly found in the region, such as privet (*Ligustrum japonicum*), English ivy (*Hedera helix*), goosegrass (*Galium aparine*), cut leaf geranium (*Geranium dissectum*), and non-native grasses.

Wildlife Species: The BSA is situated within riparian redwood forest, and wildlife species known to occur in the vicinity include Stellar's jay (*Cyanocitta stelleri*), western gray squirrel (*Sciurus griseus*), and chestnut-backed chickadee (*Poecile rufescens*). Additionally, the portion of San Anselmo Creek within the project site is located above two partial fish passage barriers at Saunders Avenue and a flood control channel where Corte Madera Creek feeds into a larger slough. San Anselmo Creek is still considered anadromous because the barriers only deter passage during low flow portions of the year. Central California Coastal (CCC) steelhead (*Oncorhynchus mykiss*) is considered present within the watershed.

Special-Status Species

Based on pre-survey database searches, it was determined 77 special-status plant species and 90 special-status wildlife species have been documented in or have a range that occurs in the San Rafael, Bolinas, San Geronimo, Novato, Petaluma Point, San Quentin, San Francisco North, or Point Bonita 7.5-minute USGS quadrangles. Of these species, 22 special-status plant species and seven special-status wildlife species have documented occurrences within 8 kilometers (5 miles) of the BSA.

Special-Status Plant Species

Due to a lack of appropriate habitat elements and the presence of residential development in the surrounding landscape, the BSA has potential to support only six of the previously identified special-status plant species. Key points regarding those species are summarized here:

- **Napa false indigo *(Amorpha californica var. napensis, CNPS 1B.2)*.** Woodland habitat within the project site could support this species. However, this shrub species, which is easily identifiable, was not observed during the field surveys.

- **Seaside bittercress *(Cardamine angulata, CNPS 2B.1).*** This perennial species was not observed during the field surveys, which were conducted during the flowering period. The closest recorded occurrence of this species is a 1915 observation near the Town of Lagunitas, over 5 miles away.
- **Western leatherwood *(Dirca occidentalis, CNPS 1B.2).*** Woodland habitat within the project site could support this species. However, this woody perennial species, which is typically over 3 feet tall was not observed during the field surveys.
- **Minute pocket moss *(Fissidens pauperculus, USFSS, CNPS 1B.2).*** Mesic substrates within the project site may have the potential to support this species. This species was not observed during the field surveys; though, a common member of the same genus was found (*Fissidens crispus*).
- **Marin checker lily *(Fritillaria lanceolata var. tristulis, CNPS 1B.1).*** Though not coastal, there is riparian habitat within the project site. No *Fritillaria* (a perennial bulbiferous herb) were observed during the field surveys, which were conducted during the flowering period.
- **Tamalpais oak *(Quercus parvula var. tamalpaisensis, CNPS 1B.3).*** Though, the project site provides potential habitat, this species is a woody shrub, which would have been identifiable during the site visits. No shrubby oaks were observed during the field surveys.

Protocol-level surveys for special-status plant species were conducted during the appropriate blooming season. No special-status plant species were observed. It is therefore unlikely that there are special-status plant species present within the project site.

Special-Status Wildlife Species

The BSA is designated Critical Habitat for steelhead (*Oncorhynchus mykiss*), and the species is presumed present within this section of San Anselmo Creek. The BSA is also listed as designated Critical Habitat for Coho salmon (*O. kisutch*), although this species is considered extirpated from the tributaries and waters of San Francisco Bay. Additionally, the project site contains EFH for Pacific salmonids. Based on habitat and conditions within the project site and documented occurrences nearby, the project site has potential to support CCC steelhead.

- **Steelhead – Central California Coast DPS (*Oncorhynchus mykiss,* Federal Threatened).** San Anselmo Creek is designated as critical habitat for the central California coastal DPS of this species. Though two barriers to anadromy exist downstream of the BSA, the species is considered present within the creek.
- **Northern Spotted Owl (*Strix occidentalis caurina,* Federal Threatened, State Threatened, CDFW Species of Special Concern).** The project Site and immediately surrounding area are low-density residential developments; however, riparian redwood forest community is located nearby. While indicators of NSO nesting were not identified during site visits, this species has been documented to nest in dense forest 800 feet south of the project site, within the potential area of acoustic impacts.
- **Allen's hummingbird (*Selasphorus sasin*, USFWS Bird of Conservation Concern).** Allen's hummingbird, common in many portions of its range, is a summer resident along the majority of California's coast and a year-round resident in portions of coastal southern California and the Channel Islands. Breeding occurs in association with the coastal fog belt, and typical habitats used include coastal scrub, riparian, woodland and forest

edges, and eucalyptus and cypress groves. It feeds on nectar, as well as insects and spiders.

- **Purple martin (*Progne subis*, CDFW Species of Special Concern).** The purple martin is an uncommon summer resident in California, occurring in woodlands and low-elevation hardwood and coniferous forest. It usually feeds on insects captured in flight 100-200 feet above ground. The purple martin nests in cavities often located in tall, isolated trees or snags in open forest or woodland.
- **Olive-sided flycatcher (*Contopus cooperi*, CDFW Species of Special Concern, USFWS Bird of Conservation Concern).** This species if found within the coniferous forest biome, most often associated with forest openings, forest edges near natural openings (e.g., meadows, canyons, or rivers) or human-made openings (e.g., harvest units), or open to semi-open forest stands.
- **Oak titmouse (*Baeolophus inornatus*, USFWS Bird of Conservation Concern).** This relatively common species is year-round resident throughout much of California including most of the coastal slope, the Central Valley and the western Sierra Nevada foothills. Its primary habitat is woodland dominated by oaks. Local populations have adapted to woodlands of pines and/or junipers in some areas. The oak titmouse nests in tree cavities, usually natural cavities or those excavated by woodpeckers, though they may partially excavate their own. Seeds and arboreal invertebrates make up the birds' diet.
- **Nuttall's woodpecker (*Picoides nuttallii*, USFWS Bird of Conservation Concern).** Nuttall's Woodpecker, common in much of its range, is a year-round resident throughout most of California west of the Sierra Nevada. Typical habitat is oak or mixed woodland, and riparian areas. Nesting occurs in tree cavities, principally those of oaks and larger riparian trees. Nuttall's woodpecker also occurs in older residential settings and orchards where trees provide suitable foraging and nesting habitat. This species forages on a variety of arboreal invertebrates.

In addition to the above species, the project site has potential habitat for non-special status nesting birds, which are protected under the MBTA.

REGULATORY SETTING

Federal Regulations

Federal Endangered Species Act

The Endangered Species Act (ESA) of 1973, as amended, was enacted to provide a means to identify and protect endangered and threatened species. Under the Section 9 of the ESA, it is unlawful to take any listed species. "Take" is defined as harassing, harming, pursuing, hunting, shooting, wounding, killing, trapping, capturing, or collecting a listed species. "Harass" is defined as an intentional or negligent act or omission, which creates the likelihood of injury to wildlife by annoying it to such an extent as to significantly disrupt normal behavioral patterns, which include, but are not limited to, breeding, feeding, or sheltering. "Harm" is defined as an act which actually kills or injures fish or wildlife and may include significant habitat modification or degradation which actually kills or injures fish or wildlife by significantly impairing essential behavioral patterns, including breeding, spawning, rearing, migrating, feeding, or sheltering.

Actions that may result in "take" of a federal-listed species are subject to USFWS or National Marine Fisheries Service permit issuance and monitoring. Section 7 of ESA requires federal agencies to ensure that any action authorized, funded, or carried out by the agency is not likely to jeopardize the continued existence of any endangered or threatened species or result in the destruction or adverse modification of designated critical habitat for such species. Any action authorized, funded, or carried out by a federal agency or designated proxy (e.g., Caltrans) which has potential to affect listed species requires consultation with the USFWS or the National Marine Fisheries Service (NMFS) under Section 7 of the ESA.

Clean Water Act (CWA)

The CWA provides guidance for the restoration and maintenance of the chemical, physical, and biological integrity of the nation's waters. Section 404 identifies the Corps jurisdiction over fill materials in essentially all water bodies, including wetlands. All federal agencies are required to avoid impacts to wetlands whenever there is a practicable alternative. Section 404 established a permit program administered by USACE regulating the discharge of dredged or fill material into Waters of the US (including wetlands). Section 401of the CWA requires that an applicant for a federal license or permit that allows activities resulting in a discharge to Waters of the U.S., obtain a state certification that the discharge complies with other provisions of CWA. The RWQCB administers the certification program in California. The guidelines allow the discharge of dredged or fill material into the aquatic system only if there is no practicable alternative that would have less adverse impacts.

Executive Order 11990 – Protection of Wetlands

This order established a national policy to avoid adverse impacts to wetlands whenever there is a practicable alternative. The U.S. Department of Transportation (DOT) promulgated DOT Order 5660.1A in 1978 to comply with this direction. On federally funded projects, impacts to wetlands must be identified. Alternatives that avoid wetlands must be considered. If wetland impacts cannot be avoided, then all practicable measures to minimize harm must be included. This must be documented in a specific Wetlands Only Practicable Alternative Finding. An additional requirement is to provide early public involvement in projects affecting wetlands. The Federal Highway Administration (FHWA) provides technical assistance and reviews environmental documents for compliance.

State Regulations

California Porter-Cologne Water Quality Control Act

This regulatory law is becoming more prominent on projects involving impacts to isolated Waters of the State (non-404/401 waters). The RWQCB is increasingly requiring Waste Discharge Requirement (WDR) permits for impacts to Waters of the State.

Streams, Lakes, and Riparian Habitat in California

Streams and lakes, as habitat for fish and wildlife species, are subject to the jurisdiction of the CDFW under Sections 1600-1616 of California Fish and Game Code. Alterations to, or work within or adjacent to streambeds or lakes generally require a 1600 series Lake and Streambed Alteration Agreement. The term "stream", which includes creeks and rivers, is defined in the CCR as "a body of water that flows at least periodically or intermittently through a bed or channel having banks and supports fish or other aquatic life [including] watercourses having a surface or subsurface flow that supports or has supported riparian vegetation" (14 CCR 1.72). In addition, the term "stream" can include ephemeral streams, dry washes, watercourses with subsurface

flows, canals, aqueducts, irrigation ditches, and other means of water conveyance if they support aquatic life, riparian vegetation, or stream-dependent terrestrial wildlife. “Riparian” is defined as “on, or pertaining to, the banks of a stream.” Riparian vegetation is defined as “vegetation which occurs in and/or adjacent to a stream and is dependent on, and occurs because of, the stream itself.” Removal of riparian vegetation also requires a Lake and Streambed Alteration Agreement from CDFW.

Special-Status Species

Special-status species include those plants and wildlife species that have been formally listed, are proposed as endangered or threatened, or are candidates for such listing under the federal Endangered Species Act or California Endangered Species Act. These acts afford protection to both listed and proposed species. In addition, California Department of Fish and Wildlife Species of Special Concern, which are species that face extirpation in California if current population and habitat trends continue, U.S. Fish and Wildlife Service (USFWS) Birds of Conservation Concern, and CDFW special-status invertebrates are all considered special-status species.

Although CDFW Species of Special Concern generally have no special legal status, they are given special consideration under the CEQA. In addition to regulations for special-status species, most birds in the United States, including non-status species, are protected by the MBTA of 1918. Under this legislation, destroying active nests, eggs, or young is illegal. Plant species on the California Native Plant Society (CNPS) Rare and Endangered Plant Inventory with California Rare Plant Rank of 1 or 2 are also considered special-status plant species and must be considered under CEQA. Rank 3 and Rank 4 species are afforded little or no protection under CEQA.

Essential Fish Habitat

The Magnuson-Stevens Fishery Conservation and Management Act of 1976 was established to conserve and manage fishery resources found off the coast, as well as anadromous species and Continental Shelf fishery resources of the United States, by exercising (A) sovereign rights for the purposes of exploring, exploiting, conserving, and managing all fish within the exclusive economic zone established by Presidential Proclamation 5030, dated March 10, 1983, and (B) exclusive fishery management authority beyond the exclusive economic zone over such anadromous species, Continental Shelf fishery resources, and fishery resources in special areas.

California Endangered Species Act

CDFW is responsible for administering California Endangered Species Act (CESA, CDFG Code §§2050, et seq.), which prohibits take of species that have been listed, or are considered for listing (candidate species) as threatened or endangered species within the State of California. CESA allows for incidental take of state listed species through issuance of an Incidental Take Permit, or through a Consistency Determination in coordination with a Biological Opinion issued by the USFWS (CDFW Code Section 2081). In contrast with federal law, the definition of “take” under CESA involves actual harm to one or more members of a listed species and does not extend to modification of habitat not involving direct take.

Migratory Bird Treaty Act

This treaty with Canada, Mexico and Japan makes it unlawful at any time, by any means or in any manner, to pursue, hunt, take, capture, or kill migratory birds. The law applies to the removal of nests (such as swallow nests on bridges) occupied by migratory birds during the breeding season. California Fish and Game Code (Sec 3500) also prohibits the destruction of any nest, egg, or nestling.

Other Sensitive Biological Communities

Other sensitive biological communities not discussed above include habitats that fulfill special functions or have special values. Natural communities considered sensitive are those identified in local or regional plans, policies, regulations, or by the CDFW. CDFW ranks sensitive communities as "threatened" or "very threatened" and keeps records of their occurrences in its California Natural Diversity Database. Sensitive plant communities are also identified by CDFW. California Natural Diversity Database (CNDDB) vegetation alliances are ranked 1 through 5 with those alliances ranked globally (G) or statewide (S) as 1 through 3 considered sensitive. Impacts to sensitive natural communities identified in local or regional plans, policies, or regulations or those identified by the CDFW or USFWS must be considered and evaluated under CEQA (CCR Title 14, Div. 6, Chap. 3, Appendix G). Specific habitats may also be identified as sensitive in city or county general plans or ordinances.

Local Regulations

Tree Protection Ordinance

In 1973, the Town of Fairfax approved Ordinance No. 387 for trees. The purpose of the ordinance is to preserve the wide variety of local native trees and to protect the benefits they provide the citizens. Chapter 8.36.020 of the Town Code defines "altering" and "tree." A Tree Permit is required for removal or significant trimming of any tree, which has a circumference of 24 inches or more measured at 24 inches above the ground. In effect, this is a little less than an 8-inch diameter tree trunk.

DISCUSSION OF IMPACTS

a) Have a substantial adverse effect, either directly or through habitat modifications, on any species identified as a candidate, sensitive, or special status species in local or regional plans, policies, or regulations, or by the California Department of Fish and Wildlife (CDFW) or United States Fish and Wildlife Service (USFWS)?

Marin Road Bridge

Less-than-Significant Impact with Mitigation Incorporated

Implementation of the Marin Road Bridge project would cause temporary impacts to Fairfax Creek by means of trenching within the creek bed during construction. Fairfax Creek is designated as EFH for Pacific Salmonids including Coho and Chinook salmon; however, Coho salmon are considered extirpated from San Francisco Bay and its tributaries and Fairfax Creek is outside of the known range for Chinook salmon (Appendix B). Although the site does not currently support the fish species mentioned above, there is potential for the species to return in the future. Therefore, if no mitigation measures are taken, the project would cause a potentially significant impact to special-status fish species.

Mitigation Measure BIO-1 would be implemented at Marin Road Bridge to protect special-status fish from harm during project implementation and minimize impacts to EFH. BIO-2 requires that project work in the channel be conducted during the dry season, and if water is present during construction activities, in-channel work must be isolated from flowing water. BIO-2 requires project work to comply with the standards and requirements of the Biological Opinion issued for the project by NMFS, including, but not limited to the implementation of a fish salvage plan. This measure also requires that the creek banks be restored to pre-project conditions following the

completion of construction work. Implementation of BIO-1 would reduce potential direct and indirect impacts to special-status fish by avoiding the take of individual fish and minimizing impacts to fish habitat. The impact would be less than significant with mitigation incorporated.

The Marin Road Bridge site also contains habitat to support special-status bird species, including Allen's hummingbird, purple martin, olive-sided flycatcher, oak titmouse, Nuttall's woodpecker, and other non-special-status nesting birds, which are protected under the MBTA. The NES for the project found no potential habitat for special status bat species. During construction, there is potential for disturbance related to construction noise that could result in impacts to nesting birds, which is a potentially significant impact under CEQA.

To minimize potential impacts to protected bird species, Mitigation Measure BIO-2 would be implemented at the Marin Road Bridge Site. BIO-2 requires that pre-construction nesting bird surveys be conducted by a qualified biologist prior to ground disturbance or vegetation removal to determine whether active nests are present. If active nests are found, a no-disturbance buffer shall be established around the nest in which ground-disturbing activities shall be avoided. Implementation of Mitigation Measure BIO-2 would ensure that project work at the Marin Road Bridge site would not have a substantial direct or indirect impact on special-status birds or non-special status nesting birds by avoiding work within the vicinity of active nests. The impact would be less than significant with mitigation incorporated.

Floristic surveys for special-status plants with potential to occur within the Marin Road Bridge BSA were conducted during the appropriate flowering season. No special-status plant species were observed at the Marin Road Bridge site; therefore, the species are presumed absent. Project implementation at the Marin Road Bridge site would have no impact on special-status plant species.

Spruce Road Bridge

Less-than-Significant Impact with Mitigation Incorporated

The Spruce Road Bridge site contains habitat to support special-status bird species, including Allen's hummingbird, oak titmouse, and Nuttall's woodpecker, and other non-special-status nesting birds protected under the MBTA. The NES for the project found no potential habitat for special status bat species. During construction, there is potential for disturbance related to construction noise that could result in impacts to nesting birds, which is a potentially significant impact under CEQA.

To minimize potential impacts to protected bird species, Mitigation Measure BIO-2, as described above, would be implemented at the Spruce Road Bridge site. Implementation of Mitigation Measure BIO-2 would ensure that project work at the Spruce Road Bridge site would not have a substantial direct or indirect impact on special-status birds or non-special status nesting birds by avoiding work within the vicinity of active nests. The impact would be less than significant with mitigation incorporated.

Implementation of project work at Spruce Road Bridge would not require in-water work or work within the bed and banks of Fairfax Creek. Therefore, no impact to special-status fish species or EFH would occur at the Spruce Road Bridge site. The impact would be less than significant.

Floristic surveys for special-status plants with potential to occur within the Spruce Road Bridge BSA were conducted during the appropriate flowering season. No special-status plant species were observed at the Spruce Road Bridge site; therefore, the species are presumed absent. Project implementation at the Spruce Road Bridge site would have no impact on special-status plant species.

Canyon Road Bridge

Less-than-Significant Impact with Mitigation Incorporated

Implementation of the Canyon Road Bridge project would cause temporary impacts to the San Anselmo Creek by means of dewatering and trenching during construction, which would temporarily impact CCC steelhead. If no mitigation measures are taken, the project would cause a potentially significant impact to special-status fish species. Mitigation Measure BIO-1, as described above, would be implemented at Canyon Road Bridge to protect special-status fish from harm during project implementation and minimize impacts to EFH. Implementation of Mitigation Measure BIO-1 would reduce potential impacts to special-status fish species at the Canyon Road Bridge site to a less-than-significant level because it would prevent direct take of individual fish and substantially minimize impacts to EFH.

The Canyon Road Bridge site also contains habitat to support NSO and nesting birds, including Allen's hummingbird, purple martin, olive-sided flycatcher, oak titmouse Nuttall's woodpecker, and other non-special-status nesting birds. The NES for the project found no potential habitat for special status bat species. During construction, there is potential for disturbance related to construction noise and nighttime lighting that could result in impacts to NSO and nesting birds, which is a potentially significant impact under CEQA.

To minimize potential impacts to protected bird species, Mitigation Measure BIO-2, as described above, would be implemented at the Canyon Road Bridge site. In addition, Mitigation Measure BIO-3 would be implemented at the Canyon Road Bridge site, which includes measures to avoid and reduce potential impacts to NSO. BIO-3 requires that protocol-level surveys in accordance with the USFWS standards must be implemented prior to the start of construction work. If protocol-level surveys indicate that NSOs are nesting within the potential acoustic impact distance to be determined in consultation with the USFWS, project work may not commence until the end of the nesting season, i.e., September 1. If protocol-level surveys determine that NSO are not nesting or not nesting within the potential acoustic impact zone during the year of the surveys, project work shall commence June 1. Implementation of Mitigation Measures BIO-2 and BIO-3 would ensure that project work at the Canyon Road Bridge site would not have a substantial direct or indirect impact on special-status birds or non-special status nesting birds by avoiding work within the vicinity of active nests. The impact would be less than significant with mitigation incorporated.

Floristic surveys for special-status plants with potential to occur within the Canyon Road Bridge BSA were conducted during the appropriate flowering season. No special-status plant species were observed at the Canyon road Bridge site; therefore, the species are presumed absent. Project implementation at the Canyon Road Bridge site would have no impact on special-status plant species.

b) Have a substantial adverse effect on any riparian habitat or other sensitive natural community identified in local or regional plans, policies, regulations, or by the CDFW or USFWS?

Marin Road Bridge

Less-than-Significant Impact

Sensitive natural communities at the Marin Road Bridge site include Riparian Redwood Forest and Perennial Stream. Although Riparian Redwood Forest is present in the Marin Road Bridge BSA, this community would be entirely avoided by project work; therefore, no temporary or permanent impacts to Riparian Redwood Forest at the Marin Road Bridge site would occur, and no mitigation measures are required.

Project construction work at Marin Road Bridge would result in approximately 0.06-acre (2,613 square feet) of temporary direct impacts to Perennial Stream habitat of Fairfax Creek. To reduce and minimize impacts to Perennial Stream habitat, Mitigation Measure BIO-5 would be implemented. BIO-5 contains measures to protect Fairfax Creek from sediment and pollutant runoff from project construction. Measures include but are not limited to implementation of an Accidental Spill Prevention and Cleanup Plan, placing spill control absorbent material underneath stationary equipment, using a nontoxic drilling mud and slurry seal, washing equipment outside of the creek channel, and ensuring that all trash is deposited in covered or closed trash containers. Pursuant to the Clean Water Act Section 404 and 401, work below the ordinary high water mark of Fairfax Creek is also subject to USACE and RWQCB jurisdiction. The RWQCB also has jurisdiction over such work under the Porter Cologne Act. Approval by regulatory agencies (e.g., USACE, RWQCB, CDFW, and NMFS) would be required for all work within potential jurisdictional areas, and the project would be required to adhere to any requirements of the final permits. With implementation of Mitigation Measure BIO-5 and compliance with regulatory permits, project work at Marin Road Bridge would not result in a substantial adverse effect on Perennial Creek. The impact would be less than significant with mitigation incorporated.

Spruce Road Bridge

Less-than-Significant Impact

Sensitive natural communities at the Spruce Road Bridge site include Riparian Redwood Forest and Perennial Stream. Although Riparian Redwood Forest is present in the Spruce Road Bridge BSA, this community would be entirely avoided by project work; therefore, no temporary or permanent impacts to Riparian Redwood Forest at the Spruce Road Bridge site would occur, and no mitigation measures are required.

Project construction work at Spruce Road Bridge would not require any work within Fairfax Creek, therefore, no temporary or permanent impacts to Perennial Stream would result from project work. Therefore, project work at Spruce Road Bridge would not have a substantial adverse effect on Perennial Stream habitat. The impact would be less than significant.

Canyon Road Bridge

Less-than-Significant Impact with Mitigation Incorporated

Sensitive natural communities at the Canyon Road Bridge site include Riparian Redwood Forest and Intermittent Stream. Project construction work at Canyon Road Bridge would result in

temporary direct impacts to Riparian Redwood Forest, as tree trimming could potentially be required to gain necessary access during construction and permanent impacts are anticipated to occur when the wing wall footings at this site are replaced. Riparian Redwood Forest is a sensitive natural community at the state level; therefore, temporary and permanent impacts to Riparian Redwood Forest are a potentially significant impact under CEQA.

To reduce potential impacts to Riparian Redwood Forest, Mitigation Measure BIO-4 would be implemented at the Canyon Road Bridge site. BIO-4 requires that the project implement all recommendations of the arborist report prepared for the project in order to protect existing redwoods near the wingwall proposed to be replaced. Silt fencing or another sediment trapping method shall also be installed down gradient of the work site in order to minimize off-site transport of sediments, and exclusion fencing shall be installed along the limits of clearing and grubbing to prevent encroachment into undisturbed habitats. With implementation of BIO-4, project work at the Canyon Road Bridge site would not have a substantial adverse effect on Riparian Redwood Forest habitat. The impact would be less than significant with mitigation incorporated.

Project construction work at Canyon Road Bridge would result in approximately 0.22-acre (2,613 square feet) of temporary direct impacts to Intermittent Stream habitat of San Anselmo Creek. To reduce and minimize impacts to Intermittent Stream habitat, Mitigation Measure BIO-5 would be implemented. BIO-5 contains measures to protect the creek from sediment and pollutant runoff from project construction. Measures include but are not limited to implementation of an Accidental Spill Prevention and Cleanup Plan, placing spill control absorbent material underneath stationary equipment, using a nontoxic drilling mud and slurry seal, washing equipment outside of the creek channel, and ensuring that all trash is deposited in covered or closed trash containers. Pursuant to the Clean Water Act Section 404 and 401, work below the ordinary high water mark of Fairfax Creek is also subject to USACE and RWQCB jurisdiction. The REWQCB also has jurisdiction over such work under the Porter Cologne Act. Approval by regulatory agencies (e.g., USACE, RWQCB, CDFW, and NMFS) would be required for all work within potential jurisdictional areas, and the project would be required to adhere to any requirements of the final permits. With implementation of Mitigation Measure BIO-5 and compliance with regulatory permits, project work at Canyon Road Bridge would not result in a substantial adverse effect on Intermittent Creek. The impact would be less than significant with mitigation incorporated.

c) Have a substantial adverse effect on state or federally protected wetlands (including, but not limited to, marsh, vernal pool, coastal, etc.) through direct removal, filling, hydrological interruption, or other means?

No Impact

No state or federally protected wetlands are present at any of the three project sites (Appendix B). Therefore, project implementation would have no impact on any state or federally protected wetlands.

d) Interfere substantially with the movement of any native resident or migratory fish or wildlife species or with established native resident or migratory wildlife corridors, or impede the use of native wildlife nursery sites?

Marin Road Bridge

Less-than-Significant Impact with Mitigation Incorporated

The Marin Road Bridge is currently situated upstream from a total barrier to anadromy, as the box culvert at Center Boulevard blocks fish passage into the BSA. This passage may be replaced or removed in the future, which would allow the annual steelhead run to return to Fairfax Creek. Should this occur, project work at Marin Road Bridge would potentially interfere with the use of wildlife migratory corridors, which is a potentially significant impact. As described in *Section 3.1, Project Description,* work in the creek would be conducted during the dry season when these segments of the creek are at their lowest flow rates. The work areas would be dewatered by temporarily diverting any potential flows using means such as short dams made with sandbags, and/or longitudinal piping to bypass the work areas. Stagnant water would be pumped out to create a completely dry work area. In addition, Mitigation Measures BIO-1 and BIO-5, as described above in Threshold a) and c), would be implemented. Mitigation Measures BIO-1 and BIO-5 include measures to avoid and minimize impacts to fish species and fish habitat within the creek. Implementation of these measures would ensure that potential impacts to fish migratory corridors would be reduced to a less-than-significant level. Therefore, project work at Marin Road Bridge would not interfere substantially with the movement of fish or wildlife species. The impact would be less than significant with mitigation incorporated.

Spruce Road Bridge

Less-than-Significant Impact

The Spruce Road Bridge BSA contains EFH for Coho salmon and Chinook salmon; however, neither species is considered present because the site is outside of both species current or known ranges. A total barrier to anadromy in Fairfax Creek is located just upstream of the confluence with San Anselmo Creek and prevents steelhead from entering Fairfax Creek. Steelhead are not considered present within Fairfax Creek or the BSA because of this barrier. In addition, project work at Spruce Road Bridge would not contain any in-water work or work within the bed or banks of Fairfax Creek. Therefore, project work at Spruce Road Bridge would not interfere substantially with the movement of fish or wildlife species. The impact would be less than significant.

Canyon Road Bridge

Less-than-Significant Impact with Mitigation Incorporated

The Canyon Road Bridge project impact footprint contains steelhead spawning migration habitat within San Anselmo Creek. Project activities have been designed to preserve flow and passage of the creek, and in-water work which would impact the intermittent stream would avoid the migratory season, As described in *Section 3.1, Project Description,* work in the creek would be conducted during the dry season when these segments of the creek are at their lowest flow rates. The work areas would be dewatered by temporarily diverting any potential flows using means such as short dams made with sandbags, and/or longitudinal piping to bypass the work areas. Stagnant water would be pumped out to create a completely dry work area. In addition, Mitigation Measures BIO-1 and BIO-5, as described above in Threshold a) and c), would be implemented. Mitigation Measures BIO-1 and BIO-5 include measures to avoid and minimize impacts to fish species and fish habitat within the creek. Implementation of these measures would ensure that potential impacts to fish migratory corridors would be reduced to a less-than-significant level. Therefore, project work at Canyon Road Bridge would not interfere substantially

with the movement of fish or wildlife species. The impact would be less than significant with mitigation incorporated.

e) Conflict with any local policies or ordinances protecting biological resources, such as a tree preservation policy or ordinance?

Marin Road Bridge and Spruce Road Bridge

No Impact

Project work at Marin Road Bridge would not require tree removal. Project work at Spruce Road Bridge would all occur from the bridge deck, and no ground-disturbing activities are required. Therefore, project work at Marin Road Bridge and Spruce Road Bridge would not conflict with any local policies or ordinances protecting biological resources. No impact would occur.

Canyon Road Bridge

Less-than-Significant Impact

Project work at Canyon Road Bridge would not require the removal of any trees; however, the replacement of the northwest wingwall of the bridge would require soil nails to be drilled into the roots of an existing cluster of redwood trees adjacent to the bridge. An Arborist Report for the proposed work at Canyon Road Bridge has been prepared (Appendix A) which evaluates the impact of project work on the existing redwood trees. Based on the observation of the exposed roots of toppled and eroded redwood trees, the qualified arborist determined that the drilling of holes in order to install the soil nail walls is not likely to significantly impact the health or stability of the redwood trees; however, it is impossible to know with absolute certainty that, if roots are severed by drilling, whether a sizable amount of root system loss would occur. Thus, Mitigation Measure BIO-4, as described above in Threshold b), would be implemented. This measure requires that a Certified Arborist inspect the health of the redwood trees impacted by project work at a 30-, 60- and 90-day interval post drilling, and one year after drilling. If the Certified Arborist has concerns of the survival of the trees, the Town of Fairfax would be notified and appropriate rectification actions taken. With implementation of this measure, the proposed project would not conflict with any other local ordinances or policies. The impact would be less than significant.

f) Conflict with the provisions of an adopted Habitat Conservation Plan, Natural Community Conservation Plan, or other approved local, regional, or state habitat conservation plan?

No Impact

No state, regional, or federal habitat conservation plans or Natural Community Conservation Plans have been adopted for any of the project sites. Therefore, the project would not conflict with the provisions of an adopted Habitat Conservation Plan, Natural Community Conservation Plan, or other approved conservation plan. No impact would occur.

MITIGATION MEASURES

Mitigation Measure BIO-1: Special-Status Fish and Essential Fish Habitat (Marin Road Bridge and Canyon Road Bridge)

The following measures shall be implemented at Marin Road Bridge and Canyon Road Bridge to avoid and minimize potential project impacts to steelhead, critical habitat for steelhead and Coho Salmon, and EFH.

- The project shall follow the standards and requirements of the Biological Opinion issued for the project by NMFS to ensure that the project will not result in permanent adverse effects to steelhead, critical habitat, or EFH.
- Work within the channel shall be conducted during the dry season (June 1 through October 15) to avoid disrupting the adult steelhead migration cycle. Work outside of this period shall require consultation with NMFS.
- If water is present during project activities, in-channel work shall be conducted in isolation from flowing water. Prior to the start of construction activities, the work area shall be isolated, and flowing water should be diverted around the isolated area.
- As described in the project's Biological Opinion, a fish salvage plan shall be developed and approved by NMFS prior to the onset of any in-channel work if water is present. The plan shall include proposed methods for dewatering, expected location and duration of dewatering activities, and methods for conducting fish salvage during dewatering activities. Consistent with the requirements of the project's Biological Opinion, fish would be captured by a qualified fisheries biologist using one or more of the following methods: electrofishing, dip net, seine, throw net, block net, minnow trap. Collected fish would be immediately returned to the stream at suitable locations in San Anselmo Creek downstream or upstream of the dewatered areas as determined by qualified biologists and approved by NMFS.
- Concrete, dust, and other debris from concrete removal activities shall be captured and removed from the work site so as not to enter the creek channel.
- The creek banks shall be restored to pre-project conditions following the completion of work.
- The existing fish ladder shall be left in place and avoided by project activities. Where disturbed, the creek channel shall be restored to the pre-project grade using native cobble, gravel, and soils in appropriate ratios to mimic pre-project conditions.

Mitigation Measure BIO-2: Nesting Bird Species

Although potential nesting habitat for nesting birds would not be lost as a result of the proposed project, construction could disturb active nests. The following measures shall be implemented at the Marin Road Bridge, Spruce Road Bridge, and Canyon Road Bridge sites to avoid and minimize potential impacts to special-status and non-special-status nesting birds:

- If proposed project activities begin between February 15 and August 31, pre-construction surveys shall be conducted by a qualified biologist prior to ground disturbance or vegetation removal to determine whether active nests containing eggs, chicks, or young are present in the project site. Pre-construction surveys for active nests shall be

conducted no more than 14 days prior to ground disturbing or vegetation removal activities.

- If active nests containing eggs, chicks, or young are not observed during pre-construction surveys, construction shall proceed.
- If active nests containing eggs, chicks, or young are observed, ground-disturbing activities shall be avoided within a 25- to 100-foot exclusion zone for passerine birds and a 200- to 500-foot exclusion zone for raptors and special-status species. Exclusion size shall be dependent upon species and nest location. Appropriate exclusion distances shall be determined by a qualified biologist based on the species present and location of the nest relative to construction activities (e.g., the nest is sufficiently shielded from construction to avoid disturbance). Construction within this buffer shall be prohibited until the qualified biologist determines that the nest is no longer active. If an active nest is found after the completion of the pre-construction surveys or after construction begins, all construction activities shall stop until a qualified biologist has evaluated the nest and determined an appropriate buffer to be placed around the nest. If avoidance of a buffer zone is not feasible, CDFW and/or the USFWS shall be contacted to coordinate an appropriate course of action.
- No surveys shall be required if project activities begin during the non-nesting season, September 1 and February 14.

Mitigation Measure BIO-3: NSO (Canyon Road Bridge)

Although the Canyon Road Bridge does not contain habitat suitable for nesting NSO, NSO that nest in forest adjacent to the project sites may be affected by noise from proposed project activities during nesting. The following measures shall be implemented at the Canyon Road Bridge site to avoid and minimize potential project impacts to NSO:

- Final avoidance and minimization measures shall be determined in consultation with the USFWS to ensure project design including avoidance and minimization measures do not result in adverse effects to NSO.
- Work within the project site will be conducted outside the nesting season (September 1 through January 31) to avoid disrupting nesting NSO within and adjacent to the project site. Work outside of this period during the nesting season shall require protocol-level surveys and consultation with the USFWS and CDFW.
- If work within the project site must occur during the nesting season (February 1 through August 31), protocol-level surveys in accordance with the USFWS Protocol for Surveying Proposed Management Activities that may Impact Northern Spotted Owls (2012). For "disturbance only" projects (see Project Impacts section below), six surveys shall be required during the nesting season of the project site and the surrounding 0.25-mile area (survey area).
- If protocol-level surveys indicate that NSOs are nesting within the potential acoustic impact distance to be determined in consultation with the USFWS, project work may not commence until the end of the nesting season, i.e., September 1.
- If protocol-level surveys determine that NSO are not nesting or not nesting within the potential acoustic impact zone during the year of the surveys, project work shall commence June 1. June 1 is the earliest date non-nesting status can be confirmed.

- If project work begins in the non-nesting season and is to continue into the nesting season, project work shall cease January 31 and shall not recommence until protocol-level surveys as described above determine the nesting status of the survey area.

Mitigation Measure BIO-4: Riparian Habitat (Canyon Road Bridge)

The following measures shall be implemented at the Canyon Road Bridge site to avoid and reduce impacts to riparian habitat:

- A Certified Arborist shall visit the Canyon Road Bridge site after the soil nail drilling has occurred at a 30-, 60-, and 90-day interval, followed by a site visit one year later. The Certified Arborist shall examine the health of the trees that were impacted by project work and raise any concerns to the Town of Fairfax.
- Temporarily impacted areas in this habitat shall be revegetated with native, non-invasive plants suitable for the soil and site conditions.
- Silt fencing or other approved sediment trapping shall be installed down gradient of the work site to minimize off-site transport of sediments.
- Exclusion fencing shall be installed along the limits of clearing and grubbing to prevent encroachment into undisturbed habitats.

Mitigation Measure BIO-5: Mechanical Equipment in the Creek Bed (Marin Road Bridge and Canyon Road Bridge)

The following measures shall be implemented at Marin Road Bridge and Canyon Road Bridge to avoid and/or minimize and restore potential impacts to creek habitat resulting from the use of mechanical equipment in the creek bed.

- The primary construction shall be completed during the dry season, between April 15 and October 15.
- Final grading in the creek bed shall conform to the existing creek channel both downstream and upstream (except in the areas of permanent fill), and existing bed materials shall be replaced with similar sized materials.
- Regulatory approval shall be obtained for all work within potential jurisdictional areas, including approval from the USACE, RWQCB, CDFW, and NMFS. All work within these areas shall conform to any conditions imposed by the regulating agencies.
- Prior to any clearing, grubbing, pruning, or groundbreaking activity, the limits of construction shall be fenced with temporary high-visibility construction fencing to protect environmentally sensitive areas, to prevent any equipment from unnecessarily extending the work area or entering the wetted channel. In addition, silt fencing shall be installed at the base of the construction fencing, or where appropriate, to prevent debris from entering the creek. All fencing shall be removed upon project completion.
- Prior to construction, the contractor shall be required to prepare an Accidental Spill Prevention and Cleanup Plan. This plan shall include required spill control absorbent material, for use beneath stationary equipment, to be present on-site and available at all times.
- To minimize fluid leaks during operation, refueling, and maintenance of stationary equipment spill control absorbent material shall be in place underneath this equipment at

all times to capture potential leaks. All refueling and maintenance of equipment, other than stationary equipment, shall occur outside the creek's top-of-bank. Any hazardous chemical spills will be cleaned immediately.

- All stockpiling of construction materials, equipment, and supplies, including storage of chemicals, refueling and maintenance, shall occur outside the creek channel. No equipment shall be washed where runoff could enter the creek.
- No motorized equipment shall be left within the channel (top of bank to top of bank) overnight unless a container or similar method is securely placed beneath the equipment to catch any fluid leakage. All contained fluids shall be disposed of in a permitted manner.
- The contractor shall be required to use a drilling mud and slurry seal that is nontoxic to aquatic life if there are drilling activities related to construction of the proposed project. All drilling muds and fluid shall be contained on-site in tanks and disposed of in a permitted manner. Fluids from saw cutting and other activities shall be collected and not allowed to flow into the creek.
- No equipment, including concrete trucks, shall be washed within the channel of the creek, or where wash water could flow into the channel. Prior to proposed project construction, the contractor shall establish a concrete washout area for concrete trucks in a location where wash water will not enter the creek or adjacent areas. The washout area shall follow the practices outlined in the San Francisco Bay Regional Water Quality Control Board Erosion and Sediment Control Field Manual (page 107-108, July 1999) or more recent guidelines. Substitution of the designated concrete washout area or methods shall require prior approval of the Town of Fairfax.
- All water that comes in contact with wet concrete shall be pumped directly into tanks and disposed of at a permitted location.
- If work is to occur on the roadway and bridge approaches during the period October 15 to April 15, all drainage inlets within the project site shall be protected from receiving polluted storm water through the use of filters such as fabrics, gravel bags, straw wattles, or other appropriate BMPs.
- Water encountered during construction of the bridge foundations or footings shall be managed in accordance with an approved dewatering plan.
- All workers shall ensure that food scraps, paper wrappers, food containers, cans, bottles, and other trash from the project site are deposited in covered or closed trash containers. The trash containers shall not be left open and unattended overnight.
- The Town of Fairfax shall require that all disturbed areas in the stream channel be re-graded to match the surrounding topography by October 15. Seed and certified weed-free straw shall be placed on disturbed areas in the proposed project site (with the exception of the lower creek banks, creek bed, and areas below the OHW mark). A jute mesh type or equivalent matting shall be placed over the straw, installed per the manufacturer's instructions. This matting shall have no plastic incorporated into it. Substitution of materials or erosion control methods shall require prior approval of the Town of Fairfax.
- After construction, the proposed project site shall be inspected following the first heavy rain, during the middle of the rainy season and at the end of the rainy season. During

each visit areas of significant erosion or erosion control device failure shall be noted and appropriate remedial actions taken.

4.2.5 Cultural Resources

Would the project:	Potentially Significant Impact	Less-than-Significant Impact with Mitigation Incorporated	Less-than-Significant Impact	No Impact
a) Cause a substantial adverse change in the significance of a historical resource pursuant to Section 15064.5?	☐	☐	☒	☐
b) Cause a substantial adverse change in the significance of an archaeological resource pursuant to Section 15064.5?	☐	☒	☐	☐
c) Disturb any human remains, including those interred outside of dedicated cemeteries?	☐	☒	☐	☐

ENVIRONMENTAL SETTING

The APE for all three bridges consists of the existing bridges, adjacent surface area(s) necessary for access and staging, and below deck areas within the creeks for the Marin Road Bridge and Canyon Road Bridge. The Spruce Road Bridge does not include work to be done below the surface of the bridge deck. Refer to Figures 2 to 4 for the APE maps of each project site.

Far Western Anthropological Research Group Inc. (Far Western) was retained to prepare the following cultural resources services for the proposed bridge maintenance project: 1) Records Search; 2) Historical Property Survey Report (HPSR); and 3) Archeological Survey Report (Appendix C). A brief summary of the results of these services is provided below.

Records Search

- No cultural resources are located within 0.25 miles of the Marin Road Bridge and Canyon Road Bridge APEs.
- No cultural resources are located within the Spruce Road APE, but one cultural site (CA-MRN-490) is located within 0.25 miles of the APE.
- No sacred Native American sites were identified in a search of the Sacred Lands file by the Native American Heritage Commission (NAHC).

Historical Property Survey Reports

A previous historic property report evaluated 12 bridges through the Corte Madera Creek watershed, but did not include Marin Road Bridge (27C0143), Spruce Road Bridge (27C0141), or the Canyon Road Bridge (27C0146) as at that time they were not yet 50 years of age. The APE for the bridge maintenance projects includes only the bridges –Marin Road Bridge (27C0143), Spruce Road Bridge (27C0141), and Canyon Road Bridge (27C0146). The bridges were previously determined to be ineligible for the National Register of Historic Places or as historical resources under CEQA, and are recorded as ineligible bridges in the Caltrans Historic Highway Bridge

Inventory. Far Western conducted an archaeological survey of all visible ground surfaces in the creek bed, bank and around each of the bridges. No cultural materials were observed.

Archeological Surveys

Marin Road Bridge

No resources were identified either in the archival records search or the pedestrian survey. The project APE is within areas of highest sensitivity for buried archaeological deposits. The entire APE is mapped within Latest Holocene alluvium likely to have capped earlier stable landforms. Furthermore, the proximity to a water course increases the likelihood that the area may have been used prehistorically. Any impacts along the banks of Fairfax Creek would be shallow with excavation only up to two feet in depth and therefore, no sub-surface investigation was required. However, based on the archaeological site sensitivity assessment, Caltrans requested that an Extended Phase I (XPI) study be conducted for the Marin Road Bridge site because Marin Road Bridge has several project elements which require ground disturbance. As such, Far Western prepared an XPI proposal to conduct testing via hand-auguring within the Marin Road Bridge APE. The proposed testing was designed to determine the presence or absence of archaeological deposits within the APE. The testing plan was executed on July 12, 2023, under the supervision of Far Western Principal Investigator Cassidy DeBaker. A total of five hand auger bores were excavated as part of this investigation. No cultural deposits, intact or otherwise, were encountered during this testing.

Spruce Road Bridge

No resources were identified either in the archival records search or the pedestrian survey. The project APE is within areas of highest sensitivity for buried archaeological deposits. The entire APE is mapped within Latest Holocene alluvium likely to have capped earlier stable landforms. Furthermore, the proximity to a water course increases the likelihood that the area may have been used prehistorically. Any project impacts, however, would be limited to paved surfaces on the bridge deck and adjacent road surface. As a result, no sub-surface investigation is recommended.

Canyon Road Bridge

No resources were identified either in the archival records search or the pedestrian survey. The project APE is within areas of lowest sensitivity for buried archaeological deposits. The entire APE is mapped within Pre-Quaternary alluvium and therefore predates human arrival in the area. As a result, no sub-surface investigation or further cultural studies are recommended.

DISCUSSION OF IMPACTS

a) Cause a substantial adverse change in the significance of a historical resource pursuant to CEQA Guidelines Section 15064.5?

Less-than-Significant Impact

No historic properties/cultural resources listed, determined, or potentially eligible for inclusion on the NRHP (36 CFR Part 800.4) and/or California Register of Historic Resources (CRHR) (California Public Resources Code *Section 5024.1*) were identified within or immediately adjacent to the proposed projects' APEs. All three bridges are listed as ineligible in the Caltrans Historic Highway Bridge Inventory. Impacts would be less than significant, and no mitigation is required.

b) Cause a substantial adverse change in the significance of an archaeological resource pursuant to CEQA Guidelines Section 15064.5?

Less-than-Significant Impact with Mitigation Incorporated

There are no known archeological resources within any of the three bridges APEs; however, as the Marin Road Bridge includes excavation within the creek bed, there is a potential for the project to uncover such materials during construction. While no cultural deposits, intact or otherwise, were encountered during the XPI testing at Marin Road Bridge, the possibility of adversely affecting any accidentally unearthed resources during construction is considered a potentially significant impact but can be mitigated to a less than significant level via implementation of Mitigation Measure CUL-1.

c) Disturb any human remains, including those interred outside of dedicated cemeteries?

Less-than-Significant Impact with Mitigation Incorporated

None of the project sites have been used as a formal cemetery, nor is there evidence that human remains are within the project area. However, the potential to uncover human remains is still present which is considered a potentially significant impact. Adherence to Mitigation Measure CUL-2 would reduce the possibility of disturbing accidentally discovered human remains to a less than significant level.

MITIGATION MEASURES

Mitigation Measure CUL-1 – Unknown Cultural Resources

If any archaeological or paleontological deposits are encountered, all soil-disturbing work shall be halted at the location of any discovery until a qualified archaeologist or paleontologist evaluates the significance of the find(s) and prepares a recommendation for further action. If the cultural materials are determined to be significant, a qualified cultural resources professional shall develop an appropriate treatment plan in consultation with the Town. The plan could include avoidance and preservation measures to preserve the materials in place; scientific collection and analysis; preparation of a professional report in accordance with current professional standards; and professional museum curation of collected cultural materials and resource documentation.

Mitigation Measure CUL-2 – Human Remains

In the event of post-review discoveries of human remains, the project shall implement the following procedures:

- The treatment of human remains and of associated or unassociated funerary objects discovered during any soil-disturbing activity within the project shall comply with applicable State laws. Pursuant to Section 7050.5 of the Health and Safety Code, and PRC Section 5097.94, in the event of the discovery of human remains during construction, there shall be no further excavation or disturbance of the site or any nearby area reasonably suspected to overlie adjacent remains. The Marin County Coroner shall be immediately notified and shall make a determination as to whether the remains are Native American.

- In the event of the coroner's determination that the human remains are Native American, notification of the NAHC, is required who shall appoint a Most Likely Descendant (MLD) (PRC Section 5097.98). The archaeological consultant, project sponsor, and MLD shall make all reasonable efforts to develop an agreement for the treatment, with appropriate dignity, of human remains and associated or unassociated funerary objects (CEQA Guidelines Section 15064.5(d)). The agreement should take into consideration the appropriate excavation, removal, recordation, analysis, custodianship, curation, and final disposition of the human remains and associated or unassociated funerary objects. California Public Resources Code allows 48 hours to reach agreement on these matters. If the MLD and the other parties do not agree on the reburial method, the project shall follow PRC Section 5097.98(b) which states that "the landowner or his or her authorized representative shall reinter the human remains and items associated with Native American burials with appropriate dignity on the property in a location not subject to further subsurface disturbance."

4.2.6 Energy

Would the project:	Potentially Significant Impact	Less-than-Significant Impact with Mitigation Incorporated	Less-than-Significant Impact	No Impact
a) Result in potentially significant environmental impact due to wasteful, inefficient, or unnecessary consumption of energy resources, during project construction or operation?	☐	☐	☒	☐
b) Conflict with or obstruct a state or local plan for renewable energy or energy efficiency?	☐	☐	☒	☐

ENVIRONMENTAL SETTING

Electricity in the Town is provided by Marin Clean Energy (MCE) and Pacific Gas & Electric (PG&E). MCE is a public, not-for-profit electricity provider that serves as the default electricity provider for most businesses and residents and offers various renewable energy options. PG&E provides the transmission and distribution of electricity, btu residents are primarily served by MCE for the electricity itself. Customers may opt out of MCE services and elect PG&E as their electricity provider if they choose. PG&E also provides natural gas service.

REGULATORY SETTING

Town of Fairfax Climate Action Plan

The Town of Fairfax Climate Action Plan aims to achieve zero GHG emissions by 2030 through the implementation of various measures, including requiring all new construction to be all-electric and improving energy efficiency and electrification in existing buildings. The plan contains strategies related to building electrification, renewable energy, transportation, energy efficiency, water conservation, and waste reduction. The Town's Climate Action Plan sets a more aggressive target than the state target for GHG emissions reductions, aiming for a 100% GHG emissions reduction by the year 2030 (from a 2005 baseline).

DISCUSSION OF IMPACTS

a) Result in a potentially significant environmental impact due to wasteful, inefficient, or unnecessary consumption of energy resources, during project construction or operation?

Less-than-Significant Impact

Construction of the project would use energy resources to power equipment and move workers and supplies to and from the site. Energy resources would also be required for the small quantity of extra vehicle miles traveled (VMT) traveled by cars using detours during bridge closures. Machinery idling would be limited per California law, minimizing the use of energy resources for equipment. Detours would be short and lead to a small, temporary increase in VMT that would require minimal energy resources. This impact would be temporary during project construction

and would be similar to the amount of energy needed for similar types of construction projects. Equipment and fuel would not be used wastefully during construction due to the added expense associated with renting, maintaining, and fueling equipment. In addition, detours would be as short as possible in order to minimize inconvenience to drivers. As such, energy and fuel would not be wasted or used inefficiently by construction equipment and vehicles. Energy needed for project construction would not be an unnecessary consumption of energy resources because the proposed bridge repairs are necessary for safety, and would not result in a long-term increase in energy use.

Following construction, energy use would be comparable to baseline levels. Operation of the bridges would not change and capacity would not be expanded, so energy consumption by cars using the bridge would be roughly the same as pre-project conditions. As there would be a temporary, minimal increase in energy use during construction and energy use would return to baseline levels during operation, the project would result in less than significant impacts related to the wasteful, inefficient, and unnecessary consumption of energy resources.

b) Conflict with or obstruct a state or local plan for renewable energy or energy efficiency?

Less-than-Significant Impact

The Town of Fairfax's Climate Action Plan contains strategies for the Town to meet its goal of zero GHG emissions by 2030. The plan does not provide mandatory policies for construction projects but contains high-level strategies for the Town to implement to reduce GHG emissions. Eighteen recommended actions for businesses, residents, and government entities to improve energy efficiency and the use of renewable energy resources are included in the plan, some of which pertain to transportation. Strategies related to transportation include encouraging the use of zero emission vehicles, encouraging alternative modes of transportation (i.e., biking, walking, carpooling, public transit), implementing transportation system improvements to reduce vehicle idling, and encouraging smart growth development.

The project would include improvements to three bridges within the Town that are necessary for public safety. The project would not expand the capacity of any of the bridges and would not have an impact on the existing vehicle fleet. Therefore, the project would not conflict with any policies of the Town's Climate Action Plan related to transportation. The project would not introduce any new permanent source of energy use. Therefore, the project would not conflict with or obstruct a state or local plan for renewable energy or energy efficiency. Because the Town's Climate Action Plan sets a more aggressive target for GHG reduction than statewide initiatives, the project would also not conflict with any state plan for energy efficiency or renewable energy. The impact would be less than significant.

4.2.7 Geology and Soils

Would the project:	Potentially Significant Impact	Less-than-Significant Impact with Mitigation Incorporated	Less-than-Significant Impact	No Impact
a) Directly or indirectly cause potential substantial adverse effects, including the risk of loss, injury, or death involving:				
i) Rupture of a known earthquake fault, as delineated on the most recent Alquist-Priolo Earthquake Fault Zoning Map issued by the State Geologist for the area or based on other substantial evidence of a known fault?	☐	☐	☐	☒
ii) Strong seismic ground shaking?	☐	☐	☒	☐
iii) Seismic-related ground failure, including liquefaction?	☐	☐	☒	☐
iv) Landslides?	☐	☐	☒	☐
b) Result in substantial soil erosion or the loss of topsoil?	☐	☒	☐	☐
c) Be located on a geologic unit or soil that is unstable, or that would become unstable as a result of the project, and potentially result in on- or off-site landslide, lateral spreading, subsidence, liquefaction, or collapse?	☐	☐	☒	☐
d) Be located on expansive soil, as defined in Table 18-1-B of the Uniform Building Code, creating substantial direct or indirect risks to life or property?	☐	☐	☐	☒
e) Have soils incapable of adequately supporting the use of septic tanks or alternative wastewater disposal systems where sewers are not available for the disposal of wastewater?	☐	☐	☐	☒
f) Directly or indirectly destroy a unique paleontological resource or site or unique geologic feature?	☐	☒	☐	☐

ENVIRONMENTAL SETTING

Soils

The predominant geologic units underlying the Town of Fairfax are bedrock and alluvium. All bedrock units are considered part of the Franciscan Complex, and comprised of metamorphosed rock, which is considered to have low to moderate slope stability relative to earthquake sharking, particularly on steep slopes. The alluvium is primarily loose and soft sediments and debris deposited along streambeds within the last 10,000 years. These deposits are typically those that are the most susceptible to seismic shaking, liquefaction, and differential settlement. According to the U.S. Department of Agriculture Natural Resource Conservation Service (NRCS 2019), the following soils are present at the project sites:

Marin Road and Spruce Road

- Xerorthents – urban land complex, 0 to 9 percent slopes

Canyon Road

- Tacaloma-McMullin – urban land complex, 30 to 50 percent slopes

Seismicity

The San Francisco Bay area is one of the most seismically active areas in the country. While seismologists cannot predict earthquake events, the U.S. Geological Survey's Working Group on California Earthquake Probabilities (2003) estimates there is a 62 percent chance of at least one magnitude 6.7 earthquake occurring in the Bay Area region between 2003 and 2032. As seen with damage in San Francisco and Oakland due to the 1989 Loma Prieta earthquake that was centered about 50 miles south, significant damage can occur at considerable distances. Higher levels of shaking and damage would be expected for earthquakes occurring at closer distances. The faults considered capable of generating significant earthquakes in the area are generally associated with the well-defined areas of crustal movement, which trend northwesterly. Faults considered active by the State of California and located closest to the site include the San Andreas Fault (6.2 miles west of the site) and Hayward Fault (13.8 miles east of the site). The project sites are not located within a State-designated Alquist-Priolo Earthquake fault rupture zone (California Geological Survey [CGS] 2025).

Liquefaction and Lateral Spreading

Soil liquefaction is a condition where saturated granular soils near the ground surface undergo a substantial loss of strength during seismic events. Loose, water-saturated soils are transformed from a solid to a liquid state during ground shaking. Liquefaction can result in significant deformations and ground rupture or sand boils. Soils most susceptible to liquefaction are loose, uniformly graded, saturated, fine-grained sands that lie close to the ground surface. Lateral spreading is a type of ground failure related to liquefaction. It consists of the horizontal displacement of flat-lying alluvial material toward an open area, such as a steep bank of a stream channel. Data from the County of Marin indicates that the project sites are located in a moderate to low liquefaction hazard zones (County of Marin 2025).

Landslide

None of the project sites are mapped in a Marin County landslide hazard area (County of Marin 2025). The Marin Road Bridge and Spruce Road Bridge sites are located in flat areas and are not

located near existing landslides. There are mapped landslide hazard areas and steep slopes approximately 250 feet south of the Canyon Road Bridge site (County of Marin 2025).

DISCUSSION OF IMPACTS

a-i) Directly or indirectly cause potential substantial adverse effects, including the risk of loss, injury, or death involving: Rupture of a known earthquake fault, as delineated on the most recent Alquist-Priolo Earthquake Fault Zoning Map issued by the State Geologist for the area or based on other substantial evidence of a known fault?

No Impact

The project sites are not included in an Alquist-Priolo Earthquake Fault Zone (CGS 2025). There are no other active fault traces within the vicinity of the project sites (County of Marin 2025). Because the project is not located near a known fault, the project would not expose people or structures to potential substantial adverse effects involving rupture of a known earthquake fault. No impact would occur.

a-ii) Directly or indirectly cause potential substantial adverse effects, including the risk of loss, injury, or death involving: Strong seismic ground shaking?

Less-than-Significant Impact

Seismic activity associated with faults outside of the immediate vicinity of the project sites could cause ground shaking at the project sites and could create a risk for construction workers if an earthquake happens during construction. Occasional ground shaking is common in the Bay Area, and construction workers would take the necessary precautions to maintain worker safety in the event of an earthquake. The project would include rehabilitation of existing bridges which would not directly or indirectly cause effects associated with seismic ground shaking. The project would not include construction of any new buildings or structures which could collapse in a sizeable earthquake event. Therefore, impacts associated with seismic ground shaking would be less than significant.

a-iii) Directly or indirectly cause potential substantial adverse effects, including the risk of loss, injury, or death involving: Seismic-related ground failure, including liquefaction?

Less-than-Significant Impact

As discussed in the *Environmental Setting* section above, the project sites are within an area of moderate to low liquefaction susceptibility. Liquefaction primarily occurs in loose, saturated, cohesionless soils that lose their strength and become incapable of supporting the weight of overlying soils or structures when subject to earthquake stresses. Construction of the project would take place during the dry season; therefore, it is extremely unlikely that the conditions for liquefaction to occur would be present on-site during construction. The project would implement repairs to three existing bridges to ensure their structure integrity and make them more resilient to seismic and geologic hazards. The project would not construct any new structures that would introduce risk of loss, injury, or death involving liquefaction. Therefore, the impact would be less than significant.

a-iv) Directly or indirectly cause potential substantial adverse effects, including the risk of loss, injury, or death involving: Landslides?

Less-than-Significant Impact

The term landslide includes a wide range of ground movement, such as rock falls, deep failure of slopes, and shallow debris flows. Gravity acting on an over-steepened slope is the primary reason for a landslide. Slope material that becomes saturated with water may develop a debris flow or mud flow. The resulting slurry of rock and mud may pick up trees, houses, and cars, thus blocking bridges and tributaries causing flooding along its path. None of the project sites are mapped in a Marin County landslide hazard area (County of Marin 2025). There are mapped landslide hazard areas and steep slopes approximately 250 feet south of the Canyon Road Bridge sit, which could potentially impact operations at the site (County of Marin 2025). However, the purpose of the project is to implement preventative maintenance improvements at the three bridge sites that would make them less susceptible to geologic and seismic hazards, including landslides. The project would not construct any new structures or implement improvements that would exacerbate the risk of landslides. Therefore, the project would not cause substantial adverse effects, including the risk of loss, injury, or death involving landslides. The impact would be less than significant.

b) Result in substantial soil erosion or the loss of topsoil?

Marin Road Bridge and Canyon Road Bridge

Less-than-Significant Impact with Mitigation Incorporated

During construction, project activities such as stockpiling, grading, excavation, and earth-disturbing activities would result in loose and disturbed soils on the project site. Loose and disturbed soils are more prone to erosion and loss of topsoil by wind and water. As described in *Section 3.0, Project Description,* the project would be required to implement construction-phase BMPs for erosion control and pollutant runoff in order to comply with Chapter 8.32 of the Town of Fairfax Municipal Code. Erosion control BMPs may include, but are not limited to, timely revegetation of graded areas, the use of hydroseed and hydraulic mulches, installation of erosion control blankets, and sediment detention basins, dams, or filters. The Town has the authority to review designs and proposals for construction activities to determine whether adequate BMPs will be installed, implemented, and maintained during construction and once construction is complete. In addition, Mitigation Measure BIO-5, as described in *Section 4.2.4, Biological Resources*, would be implemented at the Marin Road Bridge and Canyon Road Bridge sites, which requires measures to protect stream habitat. As part of this measure, the Town shall require that all disturbed areas in the stream channel be re-graded to match the surrounding topography by October 15 (before the rainy season). Seed and certified weed-free straw shall be placed on disturbed areas in the project site (with the exception of the lower creek banks, creek bed, and areas below the OHW mark), and a jute mesh type or equivalent matting shall be placed over the straw, installed per the manufacturer's instructions. Implementation of the required construction-phase BMPs and Mitigation Measure BIO-5 would ensure that project work at Marin Road Bridge and Canyon Road Bridge would not result in substantial erosion or the loss of topsoil. All disturbed areas would be either covered with RSP, reseeded, or covered with jute mesh or matting, which would prevent loss of topsoil in the long term. The impact would be less than significant with mitigation incorporated.

Spruce Road Bridge

No Impact

Project work at Spruce Road Bridge would not require any ground-disturbing activities. All project work would take place from the bridge deck. Therefore, project work at this site would not result in substantial soil erosion or the loss of topsoil. No impact would occur.

c) Be located on a geologic unit or soil that is unstable, or that would become unstable as a result of the project, and potentially result in on- or off-site landslide, lateral spreading, subsidence, liquefaction, or collapse?

Less-than-Significant Impact

As described above in Threshold a), the project sites are not in any mapped landslide hazard area. Liquefaction potential at the project sites is considered to be moderate to low. The project is not located on unstable soil or geologic units. The project has been designed in accordance with the recommendations of a Geotechnical Consultation memorandum prepared by Miller Pacific Engineering Group in 2014 (Miller Pacific Engineering Group 2014). The report assessed existing on-site geological conditions at the three bridges and provided recommendations for implementing the project work. Recommendations are primarily related to construction methods and specifications for the repair work, such as the length of soil nails and amount of lateral active pressures to be applied. With these recommendations being accounted for in the project design, construction of the project would not cause any soils or geologic units to become unstable. The impact would be less than significant.

d) Be located on expansive soil, as defined in Table 18 1 B of the Uniform Building Code, creating substantial direct or indirect risks to life or property?

No Impact

The potential for geologic and soil hazards from unstable or expansive soils in the project sites are considered low to nil based on data from the County of Marin (County of Marin 2025). Therefore, the project would not be located on an expansive soil, thus creating substantial direct or indirect risks to life or property. No impact would occur.

e) Have soils incapable of adequately supporting the use of septic tanks or alternative wastewater disposal systems where sewers are not available for the disposal of wastewater?

No Impact

The project does not involve construction of septic tanks or wastewater disposal systems. No impact would occur.

f) Directly or indirectly destroy a unique paleontological resource or site or unique geologic feature?

Marin Road Bridge

Less-than-Significant Impact with Mitigation Incorporated

There are no known paleontological resources within the Marin Road Bridge APE. Project work at the Marin Road Bridge would include excavation within the creek bed, there is potential for the project to uncover such materials during construction. The project would implement Mitigation

Measure CUL-1, as described in *Section 4.2.1, Cultural Resources*, which requires that if cultural or paleontological resources are found during construction, all work in the vicinity of the find would stop until the find can be evaluated by a qualified archaeologist or paleontologist. Implementation of this measure would ensure that project work at the Marin Road Bridge site would not directly or indirectly destroy a unique paleontological resource or site or unique geologic feature. The impact would be less than significant with mitigation incorporated.

Spruce Road Bridge

No Impact

Project work at Spruce Road Bridge would not include any ground-disturbing activities. Therefore, there is no potential for the project to impact any paleontological resources. No impact would occur.

Canyon Road Bridge

Less-than-Significant Impact with Mitigation Incorporated

There are no known paleontological resources within the Canyon Road Bridge APE. Project work at the Canyon Road Bridge would include excavation work, there is potential for the project to uncover such materials during construction. The project would implement Mitigation Measure CUL-1, as described in *Section 4.2.1, Cultural Resources*, which requires that if cultural or paleontological resources are found during construction, all work in the vicinity of the find would stop until the find can be evaluated by a qualified archaeologist or paleontologist. Implementation of this measure would ensure that project work at the Canyon Road Bridge site would not directly or indirectly destroy a unique paleontological resource or site or unique geologic feature. The impact would be less than significant with mitigation incorporated.

4.2.8 Greenhouse Gas Emissions

Would the project:	Potentially Significant Impact	Less-than-Significant Impact with Mitigation Incorporated	Less-than-Significant Impact	No Impact
a) Generate greenhouse gas emissions, either directly or indirectly, that may have a significant impact on the environment?	☐	☐	☒	☐
b) Conflict with any applicable plan, policy, or regulation of an agency adopted for the purpose of reducing the emissions of greenhouse gases?	☐	☐	☐	☒

ENVIRONMENTAL SETTING

Unlike emissions of criteria and toxic air pollutants, which have local or regional impacts, emissions of GHGs that contribute to global warming or global climate change have a broader, global impact. Global warming is a process whereby GHGs accumulating in the atmosphere contribute to an increase in the temperature of the earth's atmosphere. The principal GHGs contributing to global warming are carbon dioxide (CO_2), methane (CH_4), nitrous oxide (N_2O), and fluorinated compounds. These gases allow visible and ultraviolet light from the sun to pass through the atmosphere, but they prevent heat from escaping back out into space.

Among the potential implications of global warming are rising sea levels, and adverse impacts to water supply, water quality, agriculture, forestry, and habitats. In addition, global warming may increase electricity demand for cooling, decrease the availability of hydroelectric power, and affect regional air quality and public health. Like most criteria and toxic air pollutants, much of the GHG production comes from motor vehicles. GHG emissions can be reduced to some degree by improved coordination of land use and transportation planning on the city, county, and subregional level, and other measures to reduce automobile use.

REGULATORY SETTING

State Regulations

Global Warming Solutions Act

Assembly Bill (AB) 32, adopted in 2006, established the Global Warming Solutions Act of 2006 which requires the State to reduce GHG emissions to 1990 levels by 2020. In 2016, Senate Bill (SB) 32 was signed into law, amending the California Global Warming Solution Action. SB 32 and Executive Order B-30-15 require the CARB to ensure that statewide GHG emissions are reduced to 40 percent below the 1990 level by 2030. CARB updated its Climate Change Scoping Plan in December of 2017 to express the 2030 statewide target in terms of million metric tons of carbon dioxide equivalent (MMTCO2e). Based on the emissions reductions directed by SB 32, the annual 2030 statewide target emissions level for California is 260 MMTCO2e.

Bay Area 2017 Clean Air Plan

The 2017 CAP is the most recently adopted air quality plan in the Bay Area. The CAP focuses on two related BAAQMD goals: protecting public health and protecting the climate. To protect the climate, the CAP includes control measures designed to reduce emissions of methane and other super-GHGs that are potent climate pollutants in the near-term, and to decrease emissions of carbon dioxide by reducing fossil fuel combustion.

BAAQMD CEQA Air Quality Guidelines

The BAAQMD CEQA Air Quality Guidelines are intended to serve as a guide for those who prepare or evaluate air quality impact analyses for projects and plans in the San Francisco Bay Area. The guidelines include information on legal requirements, BAAQMD rules, methods of analyzing impacts, and recommended mitigation measures.

DISCUSSION OF IMPACTS

a) Generate greenhouse gas emissions, either directly or indirectly, that may have a significant impact on the environment?

Less-than-Significant Impact

The BAAQMD has adopted thresholds of significance that were designed to establish the level at which GHG emissions would cause significant environmental impacts under CEQA. The thresholds are included in the 2022 CEQA Air Quality Guidelines (BAAQMD 2022).

The project would produce GHG emissions from temporary construction-related activities, including operation of heavy equipment, use of trucks, and worker trips to and from the project sites. The proposed project would not result in an increase in generation of GHG emissions after construction is complete. GHG emissions from project operation would be limited to vehicular trips and equipment emissions during occasional maintenance activities, which would be similar to pre-project conditions.

The BAAQMD does not have an adopted threshold of significance for construction GHG emissions. The BAAQMD's approach to developing thresholds of significance for GHG impacts is to use a "fair share" approach to determine whether an individual project's GHG emissions would be cumulatively considerable. If a project would contribute its "fair share" of what is needed to achieve statewide long-term GHG reduction goals, the impact of the project's GHG emission would be less than significant. The BAAQMD has identified required design elements that land use projects must incorporate into project plans in order for the operational impact of their project to be considered less than significant. There are no design elements required for transportation infrastructure projects, and therefore the project must only be consistent with the local GHG reduction strategy that meets the criteria under State CEQA Guidelines Section 15183.5(b) (BAAQMD 2022).

The proposed project includes the repairs and maintenance to three existing bridges and would not expand the capacity of the bridge or add traffic controls (i.e., new stop signs or signalization). Traffic volumes are expected to be the same as existing conditions for all three bridges, and therefore, operation of the project would not result in an increase in GHG emissions. As described below in Threshold b), the project is consistent with the local GHG reduction

strategy. Therefore, the project would not generate GHG emission which would have a significant impact on the environment. The impact would be less than significant.

b) Conflict with any applicable plan, policy, or regulation of an agency adopted for the purpose of reducing the emissions of greenhouse gases?

No Impact

The Town's Climate Action Plan was adopted on July 7, 2021, by the Fairfax Town Council (Town of Fairfax 2021). The purpose of the Plan is to outline strategies to reduce local GHG emission throughout the year 2030. Based on data collected by local governments in transportation, energy, off-road equipment, water and wastewater, and waste sectors, the majority of community GHG emission come from vehicle trips generated by residents and businesses. From 2005 to 2018, the Town had achieved a 25 percent reduction in GHG emissions, which is well below the State and locally adopted target for Fairfax, which is 15 percent below 2005 emissions by 2020. Strategies related to transportation in the Climate Action Plan include increasing electric vehicle use; increasing opportunities for bicycling, walking, carpooling, and public transit; implementing the Safe Routes to School Program; encouraging smart growth development; transitioning to renewable diesel fuels for the Town's fleet; and implementing transportation network improvements to minimize idling times. The project would not conflict with any strategies identified in the Climate Action Plan. The project would generate some GHG emissions during construction; however, these impacts would be temporary and would be similar to the emissions generated by other similar types of construction projects. The project would not result in a permanent increase in GHG emissions. Therefore, the project would not conflict with any applicable plans, policies, or regulations adopted for the purpose of reducing GHG emissions.

4.2.9 Hazards and Hazardous Materials

Would the project:		Potentially Significant Impact	Less-than-Significant Impact with Mitigation Incorporated	Less-than-Significant Impact	No Impact
a)	Create a significant hazard to the public or the environment through the routine transport, use, or disposal of hazardous materials?	☐	☐	☒	☐
b)	Create a significant hazard to the public or the environment through reasonably foreseeable upset and accident conditions involving the release of hazardous materials into the environment?	☐	☐	☒	☐
c)	Emit hazardous emissions or handle hazardous or acutely hazardous materials, substances, or waste within one-quarter mile of an existing or proposed school?	☐	☐	☒	☐
d)	Be located on a site which is included on a list of hazardous materials sites compiled pursuant to Government Code Section 65962.5 and, as a result, would it create a significant hazard to the public or the environment?	☐	☐	☐	☒
e)	For a project located within an airport land use plan or, where such a plan has not been adopted, within two miles of a public airport or public use airport, would the project result in a safety hazard for people residing or working in the project area?	☐	☐	☐	☒
f)	Impair implementation of or physically interfere with an adopted emergency response plan or emergency evacuation plan?	☐	☐	☒	☐
g)	Expose people or structures, either directly or indirectly, to a significant risk of loss, injury or death involving wildland fires?	☐	☐	☒	☐

ENVIRONMENTAL SETTING

A material is considered hazardous if it appears on a list of hazardous materials prepared by a federal, state, or local agency or if it has characteristics defined as hazardous by such an agency. A hazardous material is defined in Title 22 of the California Code of Regulations as follows:

> *A substance or combination of substances which, because of its quantity, concentration, or physical, chemical or infectious characteristics, may either (1) cause, or significantly contribute to, an increase in mortality or an increase in serious irreversible, or incapacitating reversible, illness; or (2) pose a substantial present or potential hazard to human health or environment when improperly treated, stored, transported or disposed of or otherwise managed*. (California Code of Regulations, Title 22, Section 66261.10)

Chemical and physical properties cause a substance to be considered hazardous. Such properties include toxicity, ignitability, corrosivity, and reactivity (as defined in California Code of Regulations, Title 22, Sections 66261.20-66261.24). The release of hazardous materials into the environment could potentially contaminate soils, surface water, and groundwater supplies. Under Government Code Section 65962.5, the California Department of Toxic Substances Control (DTSC) maintains a list of hazardous substance sites. This list, referred to as the "Cortese List," includes CALSITE hazardous material sites, sites with leaking underground storage tanks, and landfills with evidence of groundwater contamination.

DISCUSSION OF IMPACTS

a) Create a significant hazard to the public or the environment through the routine transport, use, or disposal of hazardous materials?

Less-than-Significant Impact

Small amounts of hazardous materials would be used during construction activities for equipment maintenance (e.g., fuel and solvents). Use of hazardous materials would be limited to the construction phase and would comply with applicable local, state, and federal standards associated with the handling and storage of hazardous materials. Hazardous materials would not be stored or used, such as for equipment maintenance, where they could affect nearby residences. Standard construction measures would be implemented to contain any accidental spills of oil and other hazardous materials, and the contractor would be required to ensure that adequate materials are on hand to clean up any accidental spill that may occur. Spills would be cleaned up immediately, and all wastes and used spill control materials would be properly disposed of at approved disposal facilities. With implementation of these standard measures and development of a Storm Water Pollution Prevention Plan (SWPPP) (as discussed in Section 4.9 of this report), impacts associated with the use or accidental spill of hazardous materials would be less than significant. In addition, implementation of Mitigation Measure BIO-4 as described in *Section 4.2.4, Biological Resources* would further reduce this less than significant impact.

b) Create a significant hazard to the public or the environment through reasonably foreseeable upset and accident conditions involving the release of hazardous materials into the environment?

Less-than-Significant Impact

The repairs to the existing bridges would include the use of hazardous materials during the construction phase of the project such as fuels for construction vehicles. The handling and storage of these materials would be subject to all applicable local, state, and federal regulations. No upset or accident conditions can be reasonably expected to occur under these circumstances. As the proposed project would restore the bridges to their existing functions, the operation of the bridges would not result in the generation or use of hazardous materials. Therefore, impacts would be less than significant. In addition, implementation of Mitigation Measure BIO-4 (Mechanical Equipment in the Creek Bed) in Section 4.4 of this report would further reduce this less than significant impact.

c) Emit hazardous emissions or handle hazardous or acutely hazardous materials, substances, or waste within one-quarter mile of an existing or proposed school?

Less-than-Significant Impact

There are two schools in the vicinity of the project sites. The Manor Elementary School is located approximately ¼ mile north of the Marin Road Bridge. The St Rita's Parochial School is located approximately ¼ mile east of the Spruce Road Bridge. Small amounts of hazardous materials would be used during construction activities for equipment maintenance (e.g., fuel and solvents). Use of hazardous materials would be limited to the construction phase and would comply with applicable local, state, and federal standards associated with the handling and storage of hazardous materials. Hazardous materials would not be stored or used, such as for equipment maintenance, where they could affect nearby schools. Impacts would be less than significant.

d) Be located on a site which is included on a list of hazardous materials sites compiled pursuant to Government Code Section 65962.5 and, as a result, would it create a significant hazard to the public or the environment?

No Impact

The project sites are not included on the list of hazardous materials sites complied pursuant to Government Code Section 65962.5; therefore, no impact would occur under this criterion.

e) For a project located within an airport land use plan or, where such a plan has not been adopted, within two miles of a public airport or public use airport, would the project result in a safety hazard for people residing or working in the project area?

No Impact

The project sites are not within an airport land use plan or within two miles of a public airport. Therefore, the project would not result in a safety hazard or excessive noise for people residing or working in the project area. No impact would occur.

f) Impair implementation of or physically interfere with an adopted emergency response plan or emergency evacuation plan?

Less-than-Significant Impact

Emergency access to or evacuation from surrounding areas would not be restricted during the construction phase of the Marin Road Bridge as the bridge would remain entirely open to motorized and non-motorized traffic during the approximate ten working days. The project description includes the use of a flag person directing traffic at the Marin Road Bridge when necessary. The BPMP work for Spruce Road Bridge is also expected to require approximately ten working days from start to finish. The Spruce Road Bridge would be closed to motorized traffic for a number of hours a few times during this period but would remain open to foot traffic on the sidewalks. The project description includes detours for motorized traffic around the neighborhood during the temporary closures of this bridge (Figure 13). The BPMP work for Canyon Road Bridge would require approximately fifteen working days from start to finish. As described in the project description, since the Canyon Road Bridge is a one-lane bridge and would be closed at night for the sealing of its deck for a few hours, two measures to meet the needs of the residents would be implemented. First, a first-response crew and vehicle from the Ross Valley Fire Department would be positioned on the south end of the bridge for any emergency situations. Secondly, the bridge would be opened for crossing by covering the sealing agent with plywood if an emergency crossing would be needed during the short duration of bridge closure. Prior notifications would be sent to the neighborhood. With these accommodations required as a part of the project description impacts would be less than significant.

g) Expose people or structures, either directly or indirectly, to a significant risk of loss, injury or death involving wildland fires?

Less-than-Significant Impact

The project sites are located in a Local Responsibility Area (LRA) for fire hazard severity. As discussed further in *Section 4.2.20, Wildfire*, portions of the project sites are within a Moderate Fire Hazard Severity Zone (FHSZ). The project would implement repairs to existing bridges; it would not create any new inhabitable structures that would increase wildfire risk or expose people or structures either directly or indirectly to wildfire risk. The impact would be less than significant.

4.2.10 Hydrology and Water Quality

Would the project:	Potentially Significant Impact	Less-than-Significant Impact with Mitigation Incorporated	Less-than-Significant Impact	No Impact
a) Violate any water quality standards or waste discharge requirements or otherwise substantially degrade surface or ground water quality?	☐	☐	☒	☐
b) Substantially decrease groundwater supplies or interfere substantially with groundwater recharge such that the project may impede sustainable groundwater management of the basin?	☐	☐	☐	☒
c) Substantially alter the existing drainage pattern of the site or area, including through the alteration of the course of a stream or river or through the addition of impervious surfaces, in a manner which would:				
i) result in substantial erosion or siltation on- or off-site;	☐	☒	☐	☐
ii)substantially increase the rate or amount of surface runoff in a manner which would result in flooding on- or off-site;	☐	☐	☒	☐
iii) create or contribute runoff water that would exceed the capacity of existing or planned storm water drainage systems or provide substantial additional sources of polluted runoff; or	☐	☐	☒	☐
iv) impede or redirect flood flows?	☐	☐	☒	☐
d) In flood hazard, tsunami, or seiche zones, risk release of pollutants due to project inundation?	☐	☐	☒	☐
e) Conflict with or obstruct implementation of a water quality control plan or sustainable groundwater management plan?	☐	☐	☒	☐

ENVIRONMENTAL SETTING

The project sites are within the 28-square mile Corte Madera Creek Watershed which extends from Mt. Tamalpais and White's Hill through the communities of Fairfax, Sleepy Hollow, San Anselmo, Ross, Kentfield, Greenbrae, Larkspur, and Corte Madera to San Francisco Bay. The watershed includes approximately 44 miles of stream channels. Ross Creek drains the northern slope of Mt. Tamalpais and San Anselmo Creek and its tributaries drain the northwestern portion of the watershed. The two channels join to form Corte Madera Creek, which continues through

more than a mile of concrete-lined channel past the confluences of Larkspur and Tamalpais Creeks and into the salt marsh at the mouth.

Protection of water quality in California is primarily the responsibility of the State Water Resources Control Board (SWRCB), and, on a regional basis, the nine California RWQCBs. Water quality within the project sites are primarily under the jurisdiction of the San Francisco Bay RWQCB. The Town of Fairfax is responsible for overseeing the requirements of its water quality codes and ordinances.

Location Hydraulic Study Reports were prepared for Marin Road Bridge and Canyon Road Bridge in by GeomorphDesign (Appendix D). The Spruce Road Bridge project site was excluded from a detailed Hydraulic Study analysis because the project work at the Spruce Road Bridge site would not occur below the surface of the bridge deck.

Marin Road Bridge

The Marin Road Bridge spans Fairfax Creek approximately 1,845 feet downstream from "Westbrae Dam" bordering Olema Road, and about 735 feet upstream from Olema Road Bridge. According to the March 17, 2014, updated Federal Emergency Management Agency (FEMA) Flood Insurance Rate Map (FIRM Panel 451), the 1 percent annual chance flood is contained within the channel area of Fairfax Creek in the reaches immediately upstream and downstream from Marin Road Bridge.

Spruce Road Bridge

Spruce Road Bridge spans Fairfax Creek at the intersection of Spruce Road and Arroyo Road. The Spruce Road Bridge site includes portions of a Zone AE flood zone, which means that the area is subject to inundation by the one percent annual chance flood event (FEMA 2025).

Canyon Road Bridge

The Canyon Road Bridge spans San Anselmo creek approximately 3,280 feet downstream from the Fairfax Town limits near the downstream end of the Cascade Canyon Preserve, and about 2,270 creek feet upstream from the Meadow Way Bridge. According to the March 17, 2014, updated FEMA Flood Insurance Rate Map (FIRM Panel 451), the 0.2 percent and 1 percent annual chance floods are entirely contained within the San Anselmo Creek channel in the reaches immediately upstream and downstream from Canyon Road Bridge.

REGULATORY SETTING

Water Quality Control Plan (Basin Plan) for the San Francisco Bay Basin

The Basin Plan sets narrative and numerical water quality objectives for the San Francisco Bay Region. Numerical objectives typically describe pollutant concentration, physical and chemical conditions of water, and the toxicity of water to aquatic organisms. The Basin Plan establishes beneficial uses for select water bodies within the planning area. Beneficial uses for Fairfax Creek include:

- Cold freshwater habitat,
- Fish spawning,
- Wildlife habitat,

- Warm freshwater habitat,
- Water contact recreation, and
- Noncontact water recreation (San Francisco Bay RWQCB 2017).

Fairfax Creek is a tributary to San Anselmo Creek. San Anselmo Creek does not have designated beneficial uses by the Basin Plan; however, San Anselmo Creek joins with Sleepy Hollow Creek to form Corte Madera Creek. Beneficial uses of Corte Madera Creek include:

- Commercial and sport fishing,
- Cold freshwater habitat,
- Fish migration,
- Preservation of rare and endangered species,
- Fish spawning,
- Warm freshwater habitat,
- Wildlife habitat,
- Water contact recreation,
- Noncontact water recreation, and
- Navigation (San Francisco Bay RWQCB 2017).

DISCUSSION OF IMPACTS

a) Violate any water quality standards or waste discharge requirements or otherwise substantially degrade surface or ground water quality?

Less-than-Significant Impact

Project construction work at all three sites would require the use of hazardous materials generally associated with construction such as vehicle fuels, lubricants, and solvents. Construction work at the Marin Road Bridge and Canyon Road Bridge sites would also include ground-disturbing activities that would result in loose and disturbed soils and sediments. The primary risk to water quality from project implementation would be from construction-related sediment and other pollutants entering waterways via stormwater runoff.

The proposed project would be required to obtain a Section 404 permit from the Corps, a Section 1602 permit from CDFW, and a Section 401 Certification from the RWQCB. Mandatory compliance with all measures listed in each permit would be required for project approval. The project is required to comply with terms of the Marin County's Stormwater Pollution Prevention Program (MCSTOPPP), which facilitates compliance with the SWRCB's General Municipal Separate Storm Sewer System (MS4) Permit. The MS4 permit is a National Pollutant Discharge Elimination System (NPDES) permit issued to MS4 operators to regulate their stormwater discharges into public waters. Any project that includes soil disturbance during construction that has the potential to become a discharge must submit an Erosion and Sediment Control Plan (ESCP) for approval by the relevant municipality prior to the issuance of certain permits. The purpose of the ESCP is to identify potential pollutant sources that may affect stormwater runoff and document BMPs that will be implemented in order to prevent construction site pollutants from leaving the site and entering the storm drain system. An ESCP would be required for all

three bridge sites, which must be submitted to the Town for approval prior to issuance of Town permits. In addition, as stated in *Section 3.0, Project Description*, the project would be required to implement construction-phase BMPs for erosion control and pollutant runoff to comply with Chapter 8.32 of the Town of Fairfax Municipal Code. Erosion control BMPs may include, but are not limited to, timely revegetation of graded areas, the use of hydroseed and hydraulic mulches, installation of erosion control blankets, and sediment detention basins, dams, or filters. Pollutant control BMPs may include but are not limited to the use of designated washout areas or facilities, control of trash and recycled materials, tarping of materials stored on-site, and proper location of and maintenance of temporary sanitary facilities. The Town has the authority to review designs and proposals for construction activities to determine whether adequate BMPs will be installed, implemented, and maintained during construction and once construction is complete. Therefore, with compliance with permit conditions, the MCSTOPPP, and the Town of Fairfax Municipal Code, the project would not violate any water quality standards or waste discharge requirements. The impact would be less than significant.

b) Substantially decrease groundwater supplies or interfere substantially with groundwater recharge such that the project may impede sustainable groundwater management of the basin?

No Impact

The project would not use groundwater during construction or operation. Water in Fairfax is supplied by the Marin Municipal Water District (MMWD), which does not use groundwater as part of its water supply (MMWD 2017). The project would implement repairs to three existing bridges and would not result in a substantial increase in impervious surface area that would inhibit groundwater recharge. Therefore, the project would not substantially decrease groundwater supplies or interfere substantially with groundwater recharge. No impact would occur.

c) Substantially alter the existing drainage pattern of the site or area, including through the alteration of the course of a stream or river or through the addition of impervious surfaces, in a manner which would:

(i) result in substantial erosion or siltation on- or off-site?

Marin Road Bridge and Canyon Road Bridge

Less-than-Significant Impact with Mitigation Incorporated

The proposed repairs to the Marin Road Bridge and Canyon Road Bridge would require excavation within the creek bed, which has the potential to result in erosion and siltation impacts to Fairfax Creek. As described above in Threshold a), the project would be required to implement construction-phase BMPs for erosion control and pollutant runoff to comply with Chapter 8.32 of the Town of Fairfax Municipal Code and submit an ESCP in compliance with MCSTOPPP. In addition, Mitigation Measure BIO-5, as described in *Section 4.2.4, Biological Resources*, would be implemented at the Marin Road Bridge and Canyon Road Bridge sites, which requires measures to protect stream habitat. As part of this measure, the Town shall require that all disturbed areas in the stream channel be re-graded to match the surrounding topography by October 15 (before the rainy season). Seed and certified weed-free straw shall be placed on disturbed areas in the project site (with the exception of the lower creek banks, creek bed, and areas below the OHW mark), and a jute mesh type or equivalent matting shall be placed over the straw, installed per the manufacturer's instructions. Implementation of the required construction-phase BMPs and

Mitigation Measure BIO-5 would ensure that project work at Marin Road Bridge and Canyon Road Bridge would not significantly alter drainage patterns in a way that would result in substantial erosion on- or off-site. The impact would be less than significant with mitigation incorporated.

Spruce Road Bridge

Less-than-Significant Impact

Project work at Spruce Road Bridge would not include any work within the bed or banks of Fairfax Creek. Minor ground-disturbance would be necessary for the repair of expansion joint seals at each end of the bridge and to transition the new concrete deck grades at the ends of the bridge to the asphalt surface on the approach roadways. This work would not substantially alter drainage patterns as the conditions after project implementation would be similar to existing conditions. No substantial increase in impervious surface area would occur. Therefore, project work at Spruce Road Bridge would not substantially alter drainage patterns in a way that would result in substantial erosion or siltation on- or off-site. The impact would be less than significant.

> ***(ii) substantially increase the rate or amount of surface runoff in a manner which would result in flooding on- or off-site?***
>
> ***(iii) create or contribute runoff water that would exceed the capacity of existing or planned storm water drainage systems or provide substantial additional sources of polluted runoff; or***
>
> ***(iv) impede or redirect flood flows? Marin Road Bridge and Canyon Road Bridge?***

Less-than-Significant Impact

Project work at Marin Road Bridge and Canyon Road Bridge would include activities that may slightly alter local drainage patterns. A Location Hydraulic Study Report was prepared for both the Marin Road Bridge and Canyon Road Bridge work, which are included in Appendix C. The studies evaluated the potential effects of the BPMP improvements on flood water surface elevation and channel bed scour.

Work that may alter drainage patterns at Marin Road Bridge would include repairing the upstream and downstream wingwalls in place and repairing RSP around the repaired-in-place downstream wingwall. The Hydraulic Study recommended flood flow capacity protection measures which have been incorporated into project design. These measures include removing existing encroached large concrete debris from the culvert barrel at the outlet corner to enlarge the hydraulic opening, removing existing large broken concrete rubble debris from the channel bed, removing an existing mature alder rooted on the gravel bar downstream of the culvert, and removing exposed bedrock materials larger than 90 millimeters in diameter from the creek bed. The Hydraulic Study also contains recommendations for foundation depths for scour protection, which were incorporated into project design. By incorporating these measures into project design, proposed work at Marin Road Bridge would increase the hydraulic capacity of the project area and would not result in flooding, obstruction of flood flows, and would not result in stormwater runoff that would exceed the capacity of existing infrastructure. The impact would be less than significant.

Work that may alter drainage patterns at Canyon Road Bridge includes replacing the northwest and northeast bridge wingwalls. The Hydraulic Study concluded that implementation of the proposed work at the Canyon Road Bridge site would have a beneficial impact on flood capacity. The proposed repair to the left bank wingwall would increase the effective width of the bridge opening by about one foot, which would create a smoother transition between the upstream curved vertical concrete retaining wall and the vertical concrete abutment wall. In addition, the proposed repair to the left bank immediately downstream of the bridge outlet would further increase the flood flow capacity of the bridge by providing a smoother hydraulic transition in the expansion zone downstream of the bridge opening. Therefore, the proposed work at Canyon Road Bridge would increase the hydraulic capacity of the project area and would not result in flooding, obstruction of flood flows, and would not result in stormwater runoff that would exceed the capacity of existing infrastructure. The impact would be less than significant.

Spruce Road Bridge

Less-than-Significant Impact

The only ground-disturbing activities at Spruce Road Bridge would be the transition of the new concrete deck grades at the ends of the bridge to the asphalt surface on the approach roadways within 10 feet of the ends of the bridge. This would not create any additional impervious surface area or an impact on drainage patterns. Therefore, the proposed work would not substantially alter drainage patterns in a way that would result in flooding, obstruction of flood flows, or cause increased stormwater runoff that would exceed the capacity of existing infrastructure. The impact would be less than significant.

d) In flood hazard, tsunami, or seiche zones, risk release of pollutants due to project inundation?

Less-than-Significant Impact with Mitigation Incorporated

Construction of the project would involve the use of pollutants and hazardous substances which could risk release due to project inundation. The Marin Road Bridge and Spruce Road Bridge site are within FEMA Zone AE, which means that the area is subject to inundation by the one percent annual chance flood event. The Canyon Road Bridge site also involves work in San Anselmo Creek, which contains the 0.2 percent and 1 percent annual chance flood event. Therefore, if the project sites were to become inundated during construction, the project could risk pollutant release into waterways.

As described in Section 3.0, Project Description, project construction work at all three sites would occur during the dry season. Therefore, it is unlikely that the project sites would be inundated while construction work is occurring. However, the as described above in Threshold a), the project would be required to comply with permit conditions related to water quality protection, comply with the MCSTOPPP, and implement and ESCP in compliance with the Town of Fairfax Municipal Cod. With implementation of these measures, the project would not risk release of pollutants due to project inundation. The impact would be less than significant.

e) Conflict with or obstruct implementation of a water quality control plan or sustainable groundwater management plan?

Less-than-Significant Impact

The project sites are not within a groundwater basin (California Department of Water Resources 2025). Therefore, there is no sustainable groundwater management plan applicable to the project sites. As discussed above in Threshold b), the project would not involve the use of groundwater. No impact related to groundwater would occur.

The applicable water quality control plan for the region is the RWQCB's Basin Plan for the San Francisco Bay Basin. The Basin Plan designates beneficial uses and water quality objectives for surface and groundwaters of the State. As stated in *Section 3.0, Project Description,* the project would be required to obtain a Section 401 Water Quality Certification permit and Notice of Intent under the State Construction General NPDES Permit from the RWQCB. These permits are implemented to ensure compliance with water quality objectives identified in the Basin Plan. The project would be required to implement any measures included in the final permits; therefore, the project would not conflict with the applicable water quality control plan. The impact would be less than significant.

4.2.11 Land Use and Planning

Would the project:	*Potentially Significant Impact*	*Less-than-Significant Impact with Mitigation Incorporated*	*Less-than-Significant Impact*	*No Impact*
a) Physically divide an established community?	☐	☐	☐	☒
b) Cause a significant environmental impact due to a conflict with any land use plan, policy, or regulation adopted for the purpose of avoiding or mitigating an environmental effect?	☐	☐	☒	☐

ENVIRONMENTAL SETTING

The Town of Fairfax General Plan provides policies and implementation strategies for management of the resources and land uses in the Town, and the Town Codes provide restrictions and requirements to protect resources and comply with local, state, and federal laws. No habitat conservation plans have been adopted for the project area.

REGULATORY SETTING

Town of Fairfax General Plan

The Town of Fairfax General Plan contains the following policies that are relevant to the proposed project:

Land Use Element

- **Policy LU-4.2:** To the extent feasible natural features including the existing grade, mature trees, and vegetation shall be preserved with development or redevelopment.
- **Policy LU-4.1.3:** New and renewed development shall comply with all regulations encompassed in the California and Uniform Building Codes intended to reduce potential damage and threats to the public's health, safety, and welfare in the event of an earthquake.

Circulation Element

- **Policy C-2.2:** Maintain the street, sidewalk and pathway network through a regular maintenance program.

Conservation Element

- **Policy CON-2.1.2:** All planning decisions shall require application of existing air quality guidelines and best practices to minimize air quality impact.
- **Policy CON-3.1.1:** Maintain floodwater capacity and promote creek restoration.
- **Policy CON-3.1.2:** The Town of Fairfax shall protect and restore riparian habitat and ensure natural channel process in the San Anselmo Creek and Fairfax Creek watersheds.

- **Policy CON-5.2.1:** Maintain and restore native vegetation where appropriate for habitat value, aesthetics, reference habitat, and riparian cover.
- **Policy CON-6.1.2:** Protect special-status species and resident and migrant wildlife, and their habitats, within the Fairfax Planning Area (also see Goal CON-3 and Policy CON-5.2.1).
- **Policy CON-6.2.1:** Restore habitats for anadromous fish.
- **Policy CON-8.2.1:** Protect, maintain, rehabilitate, and enhance historical and cultural resources within the Fairfax Planning Area.

Safety Element

- **Policy S-1.1:** Require that new development be designed and sited to minimize risks from seismic events, including ground shaking, liquefaction, and landslides.
- **Policy S-1.2:** For new development within seismic and geologic hazard zones, including existing landslide areas, areas of high and moderate liquefaction risk, and areas of greater ground shaking amplification, require that project proponents submit geotechnical investigation reports prepared by qualified professionals and demonstration that the project conforms to all mitigation measures recommended by the reports prior to approval.
- **Policy S-1.4:** Ensure that structures intended for human occupancy are designed and constructed to retain their structural integrity when subjected to seismic activity, in accordance with the California Building Code.
- **Policy S-1.10:** Require new development in the 100-year and 500-year flood hazard zones to comply with applicable provisions for flood hazard control in the Town Code.
- **Policy S-1.23:** Consistent with State regulations, require proper storage and disposal of hazardous materials to reduce the likelihood of leakage, explosions, or fire, and to properly contain potential spills from leaving the site.
- **Policy S-2.1**: Consider climate impacts, risk, and uncertainty in designing and evaluating capital improvement projects and adjust infrastructure design standards and project locations to address asset- and site-specific vulnerabilities.
- **Policy S-3.3:** To facilitate the orderly evacuation of residential areas, maintain minimum standards for roadway design, maintenance, and vegetation management.

DISCUSSION OF IMPACTS

a) Physically divide an established community?

No Impact

The project involves maintenance of existing bridges within the Town of Fairfax. Upon completion of construction the project sites would remain the same as existing conditions. Therefore, the proposed project would not divide a community and no impact would occur.

b) Cause a significant environmental impact due to a conflict with any land use plan, policy, or regulation adopted for the purpose of avoiding or mitigating an environmental effect?

Less-than-Significant Impact

A proposed project would have a significant impact if it were to conflict with any applicable land use plan, policy, or regulation of an agency with jurisdiction over the project (including, but not limited to the general plan, specific plan, local coastal program, or zoning ordinance) adopted for the purpose of avoiding or mitigating an environmental effect. The proposed project is subject to several policies of the Town's General Plan, as described above.

Policies LU-4.1.2 and S-1.10 require that all new and renewed development must comply with all federal, state, and local regulations pertaining to development in flood zones, and comply with applicable provisions for flood hazard control in the Town Code. In addition, Policy S-2.1 requires the Town to consider climate impacts, risks, and uncertainty in designing and evaluating capital improvement projects to address site-specific vulnerabilities. As discussed in *Section 4.2.10, Hydrology and Water Quality,* the project would involve construction work in some flood hazard zones; however, the project would not place any new habitable structures within a flood hazard zone. The project would rehabilitate existing bridges to improve their structural integrity, which will make them less susceptible to flood hazards. The project would improve flood flow capacity of the respective creeks where project work would occur. Therefore, the proposed project would not conflict with these policies.

Policies S-1.1, S-1.2, and S-1.4 require new development to be sited to minimize seismic hazard risks, require projects to submit a geotechnical report to demonstrate the project complies with all geotechnical recommendations, and ensure that new structures conform to the requirements of the California Building Code to ensure seismic integrity. As discussed in *Section 4.2.7, Geology and Soils,* a geotechnical report was prepared for the project, and the project would implement recommendations of the report.

Policies LU-4.2, CON-3.1.1, CON-3.1.2, CON-5.2.1, CON-6.1.2, and CON-6.2.1 pertain to protection of biological resources in the Town, such as special-status species, riparian habitats, native vegetation, and wildlife corridors. As discussed in *Section 4.2.4, Biological Resources,* the project would implement mitigation measures to protect biological resources that have the potential to be impacted by the project, including special-status wildlife species, nesting birds, wildlife corridors, and stream habitat. Implementation of mitigation measures would reduce temporary impacts to biological resources to a less-than-significant level. The project would not have a permanent adverse effect on biological resources. Therefore, project would not conflict with policies of the General Plan related to the protection of biological resources.

Policy S-3.3 requires that minimum standards for roadway design be adhered to in order to facilitate orderly evacuation. Policy C-2.2 requires regular maintenance of the street, sidewalk and pathway network. The project would improve the circulation system by implementing preventative maintenance repairs to three bridges. The project would comply with all roadway design standards when implementing bridge repairs. Therefore, the project would not conflict with policies of the General Plan related to circulation.

4.2.12 Mineral Resources

Would the project:	Potentially Significant Impact	Less-than-Significant Impact with Mitigation Incorporated	Less-than-Significant Impact	No Impact
a) Result in the loss of availability of a known mineral resource that would be of value to the region and the residents of the state?	☐	☐	☐	☒
b) Result in the loss of availability of a locally important mineral resource recovery site delineated on a local general plan, specific plan, or other land use plan?	☐	☐	☐	☒

ENVIRONMENTAL SETTING

There are only two mines within Marin County listed on the Office of Mine Reclamation's website, which include the Redwood/Silviera Quarry and Dutra Minerals. The project sites are located within the Town of Fairfax and there are no known mineral resources within the vicinity of the project areas.

DISCUSSION OF IMPACTS

a) Result in the loss of availability of a known mineral resource that would be of value to the region and the residents of the state?

No Impact

The project sites are not located within the vicinity of either of the two mines within Marin County and no other known mineral resources areas are near the project site. Furthermore, the development of the proposed project would not preclude future excavation of oil or minerals should such resources be found. Therefore, the project would not result in the loss of availability of a mineral resource that would be of value to the region and the residents of the state.

b) Result in the loss of availability of a locally important mineral resource recovery site delineated on a local general plan, specific plan, or other land use plan?

No Impact

The project sites are not in or adjacent to any important mineral resource areas. There are no known mineral resources on the project sites as delineated in the Town of Fairfax General Plan 2010-2030. Therefore, the proposed project would have no impact on mineral resources.

4.2.13 Noise

Would the project result in:	Potentially Significant Impact	Less-than-Significant Impact with Mitigation Incorporated	Less-than-Significant Impact	No Impact
a) Generation of a substantial temporary or permanent increase in ambient noise levels in the vicinity of the project in excess of standards established in the local general plan or noise ordinance, or applicable standards of other agencies?	☐	☒	☐	☐
b) Generation of excessive groundborne vibration or groundborne noise levels?	☐	☐	☒	☐
c) For a project located within the vicinity of a private airstrip or an airport land use plan or, where such a plan has not been adopted, within two miles of a public airport or public use airport, would the project expose people residing or working in the project area to excessive noise levels?	☐	☐	☐	☒

ENVIRONMENTAL SETTING

Sound is technically described in terms of amplitude (loudness) and frequency (pitch). The standard unit of sound amplitude measurement is the decibel (dB). The decibel scale is a logarithmic scale that describes the physical intensity of the pressure vibrations that make up any sound. The pitch of the sound is related to the frequency of the pressure vibration. Since the human ear is not equally sensitive to a given sound level at all frequencies, a special frequency-dependent rating scale has been devised to relate noise to human sensitivity. The A-weighted decibel scale (dBA) provides this compensation by discriminating against frequencies in a manner approximating the sensitivity of the human ear.

Noise, on the other hand, is typically defined as unwanted sound. A typical noise environment consists of a base of steady "background" noise that is the sum of many distant and indistinguishable noise sources. Superimposed on this background noise is the sound from individual local sources. These can vary from an occasional aircraft or train passing by to virtually continuous noise from, for example, traffic on a major highway.

Several rating scales have been developed to analyze the adverse effect of community noise on people. Since environmental noise fluctuates over time, these scales consider that the effect of noise upon people is largely dependent upon the total acoustical energy content of the noise, as well as the time of day when the noise occurs. Those that are applicable to this analysis are as follows:

- L_{eq} – An L_{eq}, or equivalent energy noise level, is the average acoustic energy content of noise for a stated period of time. Thus, the L_{eq} of a time-varying noise and that of a steady noise are the same if they deliver the same acoustic energy to the ear during

exposure. For evaluating community impacts, this rating scale does not vary, regardless of whether the noise occurs during the day or the night.

- L_{max} – The maximum instantaneous noise level experienced during a given period of time.
- L_{min} – The minimum instantaneous noise level experienced during a given period of time.
- CNEL – The Community Noise Equivalent Level is a 24-hour average Leq with a 5 dBA "weighting" during the hours of 7:00 P.M. to 10:00 P.M. and a 10 dBA "weighting" added to noise during the hours of 10:00 P.M. to 7:00 A.M. to account for noise sensitivity in the evening and nighttime, respectively. The logarithmic effect of these additions is that a 60 dBA 24 hour L_{eq} would result in a measurement of 66.7 dBA CNEL.

Noise environments and consequences of human activities are usually well represented by median noise levels during the day, night, or over a 24-hour period. For residential uses, environmental noise levels are generally considered low when the CNEL is below 60 dBA, moderate in the 60–70 dBA range, and high above 70 dBA (Governor's Office of Planning and Research 2003). Noise levels greater than 85 dBA can cause temporary or permanent hearing loss. Examples of low daytime levels are isolated, natural settings with noise levels as low as 20 dBA and quiet suburban residential streets with noise levels around 40 dBA. Noise levels above 45 dBA at night can disrupt sleep. Examples of moderate level noise environments are urban residential or semi-commercial areas (typically 55–60 dBA) and commercial locations (typically 60 dBA). People may consider louder environments adverse, but most will accept the higher levels associated with more noisy urban residential or residential-commercial areas (60–75 dBA) or dense urban or industrial areas (65–80 dBA).

It is widely accepted that in the community noise environment the average healthy ear can barely perceive CNEL noise level changes of 3 dBA. CNEL changes from 3 to 5 dBA may be noticed by some individuals who are extremely sensitive to changes in noise. A 5 dBA CNEL increase is readily noticeable, while the human ear perceives a 10 dBA CNEL increase as a doubling of sound.

Noise levels from a particular source generally decline as distance to the receptor increases. Other factors, such as the weather and reflecting or barriers, also help intensify or reduce the noise level at any given location. A commonly used rule of thumb for roadway noise is that for every doubling of distance from the source, the noise level is reduced by about 3 dBA at acoustically "hard" locations (i.e., the area between the noise source and the receptor is nearly complete asphalt, concrete, hard-packed soil, or other solid materials) and 4.5 dBA at acoustically "soft" locations (i.e., the area between the source and receptor is normal earth or has vegetation, including grass). Noise from stationary or point sources is reduced by about 6 to 7.5 dBA for every doubling of distance at acoustically hard and soft locations, respectively. Noise levels are also generally reduced by 1 dBA for each 1,000 feet of distance due to air absorption. Noise levels may also be reduced by intervening structures – generally, a single row of buildings between the receptor and the noise source reduces the noise level by about 5 dBA, while a solid wall or berm reduces noise levels by 5 to 10 dBA. The normal noise attenuation within residential structures with open windows is about 17 dBA, while the noise attenuation with closed windows is about 25 dBA (Highway Research Board 1971).

Under the Caltrans Traffic Noise Analysis Protocol (CaTNAP) 1998, projects that are not Type I only require an evaluation of predicted construction noise. The project is not a Type I project as defined in 23 CFR 772.5(h); "construction on new location or the physical alteration of an existing

highway, which significantly changes either the horizontal or vertical alignment or increases the number of through-traffic lanes. The proposed BPMP project is to rehabilitate three existing bridges within the Town of Fairfax.

The project would take place within existing right-of-way in residential neighborhoods. The nearest residential properties to the project are situated within 25 feet of the APEs of each of the three BPMP bridges. Noise sources that contribute to ambient noise levels in and adjacent to the project site include traffic from local streets and noise from residential activities. Table 2 summarizes typical ambient noise levels based on population density. The vicinity of the project area is most similar to that of "quite suburban residential or small town" setting with an expected typical noise level of 45-50 dBA.

Table 2. Population Density and Associated Ambient Noise Levels

LAND USE	dBA, Ldn
Rural suburban	40-50
Quiet suburban residential or small town	45-50
Normal suburban residential urban	50-55
Normal urban residential	60
Noise urban residential	65
Very noisy urban residential	70
Downton, major metropolis	75-80
Under flight path at major airport, 0.5 to 1 mile from runway	78-85
Adjoining freeway or near a major airport	80-90

Source: Cowan 1984, Hoover and Keith 1996

DISCUSSION OF IMPACTS

a) Generation of a substantial temporary or permanent increase in ambient noise levels in the vicinity of the project in excess of standards established in the local general plan or noise ordinance, or applicable standards of other agencies?

Less-than-Significant Impact with Mitigation Incorporated

Generally, noise levels at construction sites can vary from 55 dBA to a maximum of nearly 80 dBA when heavy equipment is used. During construction of the project, noise from construction activities may intermittently dominate the noise environment in the immediate area of construction. Construction noise is regulated by Caltrans Standard Specifications Sections 7-1.01I "Sound Control Requirements," and 14-8.02 "Noise Control," which state that noise levels generated during construction shall comply with applicable local, state, and federal regulations, and that all equipment shall be fitted with adequate mufflers according to the manufacturers' specifications.

No significant noise impacts from construction are anticipated because construction would be conducted in accordance with Caltrans Standard Specifications Sections 7-1.01I and 14-8.02, as well as applicable Town noise standards. The only exception would be that deck sealing work for Canyon Road Bridge which would occur over one night, with the noise-generating activity limited to the late evening hours.

Construction noise of the project would range from 10 to 15 days for a given bridge. Noise-generating activities would be intermittent, and noise levels would vary depending on the type of construction activity. The loudest construction activities are likely to be engine noise from construction vehicles. Construction vehicles moving in and out of the construction area would be a small loader, such as a Bobcat with backhoe or bucket attachments, polyester concrete mix truck, paver, roller, small excavator, a coldplaning machine, snooper lift truck, utility pickup trucks, flatbed trucks, dump trucks, dump trailers, a crane, concrete delivery trucks and a testing van. These vehicles and equipment would not all be on-site at the same time but would move in and out and be staged within each APE as needed.

Most of the construction equipment to be used at the three sites would be relatively compact and quiet, including air compressors, generators, a shot blaster, shotcrete pumps and hoses, concrete saws, concrete chipping guns and drills, and soil drilling equipment. However, when considering the type of construction necessary to complete this type of work, the majority of construction activities would be on the lower side of the estimate as the activities necessary to rehabilitate the bridges would not require large amounts of heavy (and noisy) equipment. No pile driving would be required for any of the bridges. With the exception of Canyon Road Bridge deck sealing work, no other nighttime construction would be required for the other two BPMP bridges.

The Town of Fairfax General Plan requires appropriate standard controls to be implemented to control noise from construction projects (Policy N-3.1.4). To comply with requirements of the General Plan, Mitigation Measure NOISE-1 would be implemented. NOISE-1 requires adherence to the Town's Standard Controls for noise from construction projects. Implementation of this measure would ensure that the project would not generate a substantial increase in ambient noise levels in the project vicinity. The impact would be less than significant with mitigation incorporated.

b) Generation of excessive groundborne vibration or groundborne noise levels?

Less-than-Significant Impact

Groundborne vibration is typically associated with blasting operations, the use of pile drivers, and large-scale demolition activities, none of which are anticipated for the construction or operation of the proposed project. As such, no excessive groundborne vibrations would be generated by the proposed project and impacts would be less than significant.

c) For a project located within the vicinity of a private airstrip or an airport land use plan or, where such a plan has not been adopted, within two miles of a public airport or public use airport, would the project expose people residing or working in the project area to excessive noise levels?

No Impact

The project site is not within the vicinity of a private airstrip or public use airport, or the jurisdiction of an airport land use plan. Therefore, no impacts associated with the exposure of people living or working in areas with aviation present to excessive noise would occur.

MITIGATION MEASURES

Mitigation Measure NOISE–1: Construction Noise

The Town of Fairfax General Plan identifies two policy goals to reduce the potential for impacts associated with construction or maintenance operations:

> **Policy N-3.1.4:** Implement appropriate standard controls (e.g., some or all of Stand Controls A-H) for all construction projects.
>
> **Policy N-3.1.5:** Consider CEQA review for construction projects lasting more than 18 months, and submittal of detailed construction noise management plans.

The Town of Fairfax has developed a list of Standard Controls to comply with Policy N-3.1.4. The project shall comply with the following measures:

1. With the exception of deck sealing work on Canyon Road Bridge that would occur over one night, limit construction to the hours of 8:00 a.m. to 5:00 p.m. on weekdays, and 9:00 a.m. to 5:00 p.m. on Saturdays, with no noise-generating construction on Sundays or Holidays.
2. Control noise from construction workers' radios to the point where they are not audible at existing residences that border the project site.
3. Equip all internal combustion engine-driven equipment with mufflers which are in good condition and appropriate for the equipment.
4. Utilize quite models of air compressors and other stationary noise sources where technology exists.
5. Locate stationary noise-generating equipment as far as possible from sensitive receptors when sensitive receptors adjoin or are near a construction project area.
6. Prohibit unnecessary idling of internal combustion engines.
7. Notify residents adjacent to the project sites of the construction schedule in writing.
8. Designate a noise disturbance coordinator who would be responsible for responding to any local complaints about construction noise. The disturbance coordinator would determine the cause of the noise complaints (e.g., starting too early, bad mufflers) and institute reasonable measure warranted to correct the problem. Conspicuously post a telephone number for the disturbance coordinator at the construction site.

In addition, the project shall follow the standard construction noise requirements regulated by Caltrans Sections 7-1.01I and 14-8.02 of the Standard Specifications which states the following:

1. Do not exceed 86 dBA at 50 feet from the job site activities from 9 p.m. to 6 a.m.
2. Equip any internal combustion engines with the manufacturer-recommended muffler. Do not operate an internal combustion engine on the job site without the appropriate muffler.

4.2.14 Population and Housing

Would the project:	*Potentially Significant Impact*	*Less-than-Significant Impact with Mitigation Incorporated*	*Less-than-Significant Impact*	*No Impact*
a) Induce substantial unplanned population growth in an area, either directly (for example, by proposing new homes and businesses) or indirectly (for example, through extension of roads or other infrastructure)?	☐	☐	☐	☒
b) Displace substantial numbers of existing people or housing, necessitating the construction of replacement housing elsewhere?	☐	☐	☐	☒

ENVIRONMENTAL SETTING

The project sites are located in a residential neighborhood community of the Town of Fairfax. The General Plan land use designations surrounding the project site include low density residential and medium density residential. Land uses near Marin Road Bridge include Fairfax Creek and low density residential development. Land uses near Spruce Road Bridge include Fairfax Creek and medium density residential development. Land uses near Canyon Road Bridge include San Anselmo Creek and low-density residential development.

DISCUSSION OF IMPACTS

a) Induce substantial unplanned population growth in an area, either directly (for example, by proposing new homes and businesses) or indirectly (for example, through extension of roads or other infrastructure)?

No Impact

The proposed project would involve maintenance to three existing bridges. No residential development, permanent employment opportunities, or additional infrastructure would result from project implementation. Therefore, no unplanned population growth would directly or indirectly result from the project. No impact would occur.

b) Displace substantial numbers of existing people or housing, necessitating the construction of replacement housing elsewhere?

No Impact

The proposed project would not involve the demolition or removal of any residential development. No people or housing would be displaced, so no construction of replacement housing would be required. No impact would occur.

4.2.15 Public Services

Would the project:	Potentially Significant Impact	Less-than-Significant Impact with Mitigation Incorporated	Less-than-Significant Impact	No Impact
a) Result in substantial adverse physical impacts associated with the provision of new or physically altered governmental facilities, need for new or physically altered governmental facilities, the construction of which could cause significant environmental impacts, in order to maintain acceptable service ratios, response times, or other performance objectives for any of the public services:				
Fire protection?	☐	☐	☒	☐
Police protection?	☐	☐	☒	☐
Schools?	☐	☐	☐	☒
Parks?	☐	☐	☐	☒
Other public facilities?	☐	☐	☐	☒

ENVIRONMENTAL SETTING

The Ross Valley Fire Department (RVFD) currently provides fire protection and emergency response services to the communities of Ross, San Anselmo, Sleepy Hollow and Fairfax. The RVFD operates four fire stations. RVFD Station 21 provides fire protection and paramedic services to the project site. Station 21 is located at 10 Park Road. All three project sites are within approximately one mile of the station.

The Town of Fairfax Police Department (FPD) provides police protection services to the project sites. The FPD employs 11 full-time Police Officers, two Reserve Police Officers, four full time Police Dispatchers, one Community Services Technician and four part time Police Dispatchers. The FPD station is located at 44 Bolinas Road. All three project sites are within approximately one mile of the station.

There are two schools in the immediate vicinity of the project sites. The Manor Elementary School is located approximately one quarter mile north of the Marin Road Bridge. The Saint Rita's Parochial School is located approximately one quarter mile east of the Spruce Road Bridge.

The recreational parks within the general vicinity of the project site include the Contratti Park Baseball Field and Cascade Canyon Open Space Preserve.

DISCUSSION OF IMPACTS

a) Result in substantial adverse physical impacts associated with the provision of new or physically altered governmental facilities, need for new or physically altered governmental facilities, the construction of which could cause significant environmental impacts, in order to maintain acceptable service ratios, response times, or other performance objectives for any of the public services:

The project would not rely on the addition or alteration of any public services. No residential or commercial construction is proposed by the project. The project would not increase population in the Town that could result in additional demands for public services and therefore would not require the construction of new public service facilities or the expansion of existing public service facilities. As such, the project would not result in significant physical impacts associated with the provision of new or physically altered governmental facilities.

- Fire Protection?

Less-than-Significant Impact

The RVFD would continue to provide fire protection services to the project sites upon development. As discussed in T *Section 4.2.14, Population and Housing,* the project would not include construction of any residential structures or result in an increase in residential population. It is not anticipated that the project would necessitate the expansion of existing or construction of new fire protection facilities. Therefore, project impacts related to fire protection services would be less than significant.

- Police Protection?

Less-than-Significant Impact

During construction, a minor demand for additional FPD services may occur during the project's construction phase. Such services include, but may not be limited to, consultation during plan check, routine surveillance of the construction site by regular patrol units, potential investigations of theft of or vandalism to construction equipment and materials, and enforcement of local speed limits near the construction site. It is not anticipated that the project would necessitate the expansion of existing or construction of new police protection facilities. Therefore, project impacts related to police protection services would be less than significant.

- Schools?

No Impact

As discussed in *Section 4.2.14, Population and Housing,* the project would not include construction of any residential structures. The project would not result in an increase of population that would require additional school facilities. No impact would occur.

- Parks?

No Impact

As discussed in *Section 4.2.14, Population and Housing,* the project would not include construction of any residential structures. The project would not result in an increase of population that would require additional park facilities. No impact would occur.

- Other Public Facilities?

No Impact

As discussed in Impact 4.14 (a), the project would not include construction of any residential structures. As the project would not induce population growth, the project would not create a need for other public facilities including public libraries, public hospitals and medical centers, and community centers. No impact would occur.

4.2.16 Recreation

Would the project:	Potentially Significant Impact	Less-than-Significant Impact with Mitigation Incorporated	Less-than-Significant Impact	No Impact
a) Increase the use of existing neighborhood and regional parks or other recreational facilities such that substantial physical deterioration of the facility would occur or be accelerated?	☐	☐	☐	☒
b) Include recreational facilities or require the construction or expansion of recreational facilities which might have an adverse physical effect on the environment?	☐	☐	☐	☒

ENVIRONMENTAL SETTING

The recreational parks within the general vicinity of the project site include the Contratti Park Baseball Field and Cascade Canyon Open Space Preserve.

DISCUSSION OF IMPACTS

a) Increase the use of existing neighborhood and regional parks or other recreational facilities such that substantial physical deterioration of the facility would occur or be accelerated?

No Impact

The proposed project would not involve any additional housing or businesses that could increase the use of recreational facilities in the project area. The project would involve maintenance to three existing bridges. Physical deterioration of the recreational facilities would not be affected by the project. No impact would occur.

b) Include recreational facilities or require the construction or expansion of recreational facilities which might have an adverse physical effect on the environment?

No Impact

The project would not involve any additional housing or businesses that could increase residents and/or employees within the project sites. The proposed project would not affect recreational facilities or increase the use of nearby recreational facilities. The project would not require the construction or expansion of recreational facilities, which might have an adverse physical effect on the environment. The purpose of the project is to rehabilitate existing bridges and therefore would have no impact on recreation.

4.2.17 Transportation

Would the project:	Potentially Significant Impact	Less-than-Significant Impact with Mitigation Incorporated	Less-than-Significant Impact	No Impact
a) Conflict with a program, plan, ordinance or policy addressing the circulation system, including transit, roadway, bicycle and pedestrian facilities?	☐	☐	☒	☐
b) Conflict or be inconsistent with CEQA Guidelines section 15064.3, subdivision (b)?	☐	☐	☒	☐
c) Substantially increase hazards due to a geometric design feature (e.g., sharp curves or dangerous intersections) or incompatible uses (e.g., farm equipment)?	☐	☐	☒	☐
d) Result in inadequate emergency access?	☐	☐	☒	☐

ENVIRONMENTAL SETTING

The proposed project includes repairs to three existing bridges within the Town of Fairfax. Major Streets Classifications provides classification of major streets in Fairfax (arterial and local). Arterials carry regional trips and traffic between areas of the Town while providing access to major traffic generators. Collector streets link neighborhoods to arterial streets and carry through traffic for short segments in residential and commercial areas, while local streets provide direct access to parcels and residences. Many streets in the Town Center serve both collector and local street functions. All two-way roadways are two-lane, though on many streets, especially on the hillsides, it is impossible to pass oncoming traffic at the narrowest points. Spruce Road is classified as "Local" within the General Plan. Marin Road and Canyon Road are minor roads within the Town that do not meet the standards for classification. The intersections approaching Marin Road and Spruce Road are unsignalized intersections controlled by stop signs.

REGULATORY SETTING

Town of Fairfax General Plan

The Town of Fairfax General Plan contains the following relevant policies related to transportation:

- **Policy C-2.2:** Maintain the street, sidewalk and pathway network through a regular maintenance program.
- **Policy C-3.1:** Since many local streets in Fairfax do not have sidewalks, ensure that speed limits are set to reduce danger to children and other pedestrians.
- **Policy C-3.2:** Upgrade local streets to optimal traffic engineering standards only when there is a demonstrated public safety need to do so.

- **Policy C-3.4:** Avoid major increases in street capacity unless necessary to remedy severe traffic congestion or critical neighborhood traffic problems or where necessary for emergency vehicle access. Where capacity is increased, balance the needs of motor vehicles with those of pedestrians and bicyclists.
- **Policy C-5.1:** Improve and maintain the existing network of sidewalks and bike paths, bike lanes, pavement markings (cross walks, shared lane markings).

DISCUSSION OF IMPACTS

a) Conflict with a program, plan, ordinance or policy addressing the circulation system, including transit, roadway, bicycle and pedestrian facilities?

Less-than-Significant Impact

The Town's General Plan contains policies related to transportation and circulation. Specifically, policies C-2.2, C-3.1, C-3.2, C-3.4, and C-5.1 are relevant to the proposed project. The project includes maintenance and rehabilitation repairs to three existing bridges; therefore, the project supports Policy C-2.2 and C-3.2. The project would not change any speed limits within the project sites or expand the capacity of the roadway; therefore, the project would not conflict with Policy C-3.1 or C-3.4. The existing pedestrian and bicycle infrastructure present within the project sites would be maintained; therefore, the project would not conflict with Policy C-5.1. Therefore, the project would not conflict with any program, plan, ordinance, or policy addressing the circulation system. The impact would be less than significant.

b) Conflict or be inconsistent with CEQA Guidelines section 15064.3, subdivision (b)?

Less-than-Significant Impact

CEQA Guidelines section 15064.3(b) describes criteria for analyzing transportation impacts based on VMT. The *Technical Advisory on Evaluating Transportation Impacts in CEQA* (Governor's Office of Planning and Research 2018) states the if a project would likely lead to a measurable and substantial increase in vehicle travel, the lead agency should conduct an analysis assessing the amount of vehicle travel the project will induce. Project types that are identified to likely lead to a measurable and substantial increase in vehicle travel are those that include the addition of through lanes on existing or new highways, including general purpose lanes, HOV lanes, peak period lanes, auxiliary lanes, or lanes through grade-separated interchanges.

The Technical Advisory identifies a wide variety of projects that would not likely lead to a substantial or measurable increase in vehicle travel, and therefore generally should not require an induced travel analysis. Among these projects include:

- Rehabilitation, maintenance, replacement and repair projects designed to improve the condition of existing transportation assets (e.g., highways, roadways, bridges, culverts, tunnels, transit systems, and assets that serve bicycle and pedestrian facilities) and that do not add additional motor vehicle capacity.
- Roadway shoulder enhancements to provide "breakdown space," dedicated space for use only by transit vehicles, to provide bicycle access, or to otherwise improve safety, but which will not be used as automobile vehicle travel lanes.

- Installation, removal, or reconfiguration of traffic lanes that are not for through traffic, such as left, right, and U-turn pockets, or emergency breakdown lanes that are not utilized as through lanes.
- Installation or reconfiguration of traffic calming devices.
- Conversion of streets from one-way to two-way operation with no net increase in number of traffic lanes.
- Rehabilitation and maintenance projects that do not add motor vehicle capacity.
- Addition of new or enhanced bike or pedestrian facilities on existing streets/highways or within existing public rights-of-way.

The proposed project aligns with several types of projects described above. The project is a bridge rehabilitation project designed to improve the conditions of the existing transportation system without increasing additional motor vehicle capacity. Three existing bridges would be rehabilitated, which would not result in a net increase in traffic lanes, but would improve safety for crossing vehicles, bicyclists, and pedestrians. Therefore, the project would not likely lead to a substantial or measurable increase in vehicle travel, and a detailed travel analysis is not required. The project would not conflict or be inconsistent with CEQA Guidelines Section 15064.3(b); the impact would be less than significant.

c) Substantially increase hazards due to a geometric design feature (e.g., sharp curves or dangerous intersections) or incompatible uses (e.g., farm equipment)?

Less-than-Significant Impact

A significant impact may occur if a project were to include a new roadway design, introduce a new land use or permanent project features into an area with specific transportation requirements and characteristics that have not been previously experienced in that area, or if project access or other features were designed in such a way as to create hazardous conditions. The project would not involve new road construction or activities that could increase hazards due to a permanent design feature or incompatible uses. The proposed project would repair existing bridges and operation of the proposed project would return to existing conditions.

d) Result in inadequate emergency access?

Marin Road Bridge

No Impact

As described in *Section 3.0 Project Description*, Marin Road Bridge would remain entirely open to motorized and non-motorized traffic during the approximate ten working days needed for project construction. Therefore, emergency vehicles would be able to pass through the project site at all times. No impact to emergency access would occur.

Spruce Road Bridge

Less-than-Significant Impact

Construction work for Spruce Road Bridge would require approximately ten working days to complete. The Spruce Road Bridge would be closed to motorized traffic for a number of hours a few times during this period. As described in *Section 3.0, Project Description*, vehicle traffic would be detoured via Arroyo Road and Azalea Drive. This detour (as shown in Figure 13) would not

result in inadequate emergency access to any residences, businesses, or other land uses. The impact would be less than significant.

Canyon Road Bridge

Less-than-Significant Impact

Construction work at Canyon Road Bridge would require approximately fifteen working days from start to finish. One night of work at Canyon Road Bridge would require the bridge to be closed for approximately four to five hours to complete the deck sealing work. As described in *Section 3.0, Project Description*, a first-response crew and vehicle from RVFD would be positioned on the south end of the bridge for any emergency situations. In addition, if an emergency crossing is needed, the bridge would be opened for crossing by covering the sealing agent with plywood. Prior notifications would be sent to the neighborhood to inform them of the work schedule and details. Therefore, project work at Canyon Road Bridge would not result in inadequate emergency access. The impact would be less than significant.

4.2.18 Tribal Cultural Resources

Would the project:	Potentially Significant Impact	Less-than-Significant Impact with Mitigation Incorporated	Less-than-Significant Impact	No Impact
a) Cause a substantial adverse change in the significance of a tribal cultural resource, defined in Public Resources Code section 21074 as either a site, feature, place, cultural landscape that is geographically defined in terms of size and scope of the landscape, sacred place, or object with cultural value to a California Native American tribe, and that is:				
i) Listed or eligible for listing in the California Register of Historical Resources, or in a local register of historical resources as defined in Public Resources Code section 5020.1(k)?	☐	☒	☐	☐
ii) A resource determined by the lead agency, in its discretion and supported by substantial evidence, to be significant pursuant to criteria set forth in subdivision (c) of Public Resources Code section 5024.1? In applying the criteria set forth in subdivision (c) of Public Resources Code section 5024.1, the lead agency shall consider the significance of the resource to a California Native American tribe.	☐	☒	☐	☐

ENVIRONMENTAL SETTING

A description of the environmental setting related to tribal cultural resources can be found in *Section 4.5, Cultural Resources*.

REGULATORY SETTING

Tribal Cultural Resources Assembly Bill 52 (AB 52)

AB 52 (Chapter 532, Statutes 2014) required an update of the CEQA Guidelines to include questions related to impacts to tribal cultural resources. AB 52 establishes a consultation process with all California Native American Tribes on the Native American Heritage Commission List, Federal and Non-Federal Recognized Tribes. AB 52 also establishes a new class of resources: Tribal Cultural Resources. Key components of AB 52 include consideration of Tribal Cultural Values in determination of project impacts and mitigation and required Tribal notice and meaningful consultation.

PRC Section 21080.3.2(b) states that consultation ends when either 1) parties agree to mitigation measures or avoid a significant effect on a tribal cultural resource, or 2) a party, acting in good faith and after reasonable effort concludes that mutual agreement cannot be reached.

State of California Public Resources Code

Section 21074 of the PRC defines historical resources related to tribal cultural resources.

a) "Tribal cultural resources" are either of the following:

   a. Sites, features, places, cultural landscapes, sacred places, and objects with cultural value to a California Native American tribe that are either of the following:

      A. Included or determined to be eligible for inclusion in the California Register of Historical Resources.

      B. Included in a local register of historical resources as defined in subdivision (k) of Section 5020.1.

   b. A resource determined by the lead agency, in its discretion and supported by substantial evidence, to be significant pursuant to criteria set forth in subdivision (c) of Section 5024.1. In applying the criteria set forth in subdivision (c) of Section 5024.1 for the purposes of this paragraph, the lead agency shall consider the significance of the resource to a California Native American tribe.

b) A cultural landscape that meets the criteria of subdivision (a) is a tribal cultural resource to the extent that the landscape is geographically defined in terms of the size and scope of the landscape.

c) A historical resource described in Section 21084.1, a unique archaeological resource as defined in subdivision (g) of Section 21083.2, or a "nonunique archaeological resource" as defined in subdivision (h) of Section 21083.2 may also be a tribal cultural resource if it conforms with the criteria of subdivision (a).

Section 5020.1(k) defines "Local register of historical resources" as a list of properties officially designated or recognized as historically significant by a local government pursuant to a local ordinance or resolution.

Section 5024.1 is the establishment of the California Register of Historical Resources (California Register).

Native American Consultation

The NAHC provided a list of Native American individuals that expressed interest or ties to Marin County. Letters were sent to each of these individuals soliciting their comment. The Federated Indians of Graton Rancheria (FIGR) replied in a letter stating that "the tribe requests a meeting with representatives of the 'lead agency' for this project and any federal agencies involved in the permitting and/or funding process". As a part of the XPI study described in *Section 4.5, Cultural Resources,* FIGR requested a field meeting at the Marin Road Bridge site. The field meeting took place on January 11, 2023, and was attended by representatives from Far Western, the Town of Fairfax, California Infrastructure Consultancy, Inc, and FIGR. The purpose of this meeting was to discuss the details of the proposed project activities at Marin Road Bridge and Far Western's archaeological testing approach. FIGR did not express any specific concerns with either the project activities or proposed archaeological testing and confirmed that tribal monitors would be present for the archaeological testing. The proposed testing was designed to determine the presence or absence of archaeological deposits within the APE. The testing plan was executed on July 12, 2023, under the supervision of Far Western. A total of five hand auger bores were excavated as part of this investigation. No cultural deposits, intact or otherwise, were encountered during this testing. Also, no known tribal cultural resources were identified by FIGR.

DISCUSSION OF IMPACTS

a) Cause a substantial adverse change in the significance of a tribal cultural resource, defined in Public Resources Code section 21074 as either a site, feature, place, cultural landscape that is geographically defined in terms of size and scope of the landscape, sacred place, or object with cultural value to a California Native American tribe, and that is:

i) Listed or eligible for listing in the California Register of Historical Resources, or in a local register of historical resources as defined in Public Resources Code section 5020.1(k)?

ii) A resource determined by the lead agency, in its discretion and supported by substantial evidence, to be significant pursuant to criteria set forth in subdivision (c) of Public Resources Code section 5024.1? In applying the criteria set forth in subdivision (c) of Public Resources Code section 5024.1, the lead agency shall consider the significance of the resource to a California Native American tribe.

Less-than-Significant Impact with Mitigation Incorporated

There are no known tribal cultural resources listed within the project sites. As described in *Section 4.2.5, Cultural Resources*, there is potential for unknown cultural resources, which may include tribal cultural resources, to be discovered during earth-disturbing construction activities such as excavation and grading. As such, the project would implement Mitigation Measure CUL-1 to ensure that any accidentally discovered cultural resources would be treated with proper care. With implementation of this measure, the project would not cause a substantial adverse change in the significance of a tribal cultural resource. The impact would be less than significant with mitigation incorporated.

4.2.19 Utilities and Service Systems

Would the project:	Potentially Significant Impact	Less-than-Significant Impact with Mitigation Incorporated	Less-than-Significant Impact	No Impact
a) Require or result in the relocation or construction of new or expanded water, wastewater treatment or storm water drainage, electric power, natural gas, or telecommunications facilities, the construction or relocation of which could cause significant environmental effects?	☐	☐	☐	☒
b) Have sufficient water supplies available to serve the project and reasonably foreseeable future development during normal, dry, and multiple dry years?	☐	☐	☒	☐
c) Result in a determination by the wastewater treatment provider which serves or may serve the project that it has adequate capacity to serve the project's projected demand in addition to the provider's existing commitments?	☐	☐	☐	☒
d) Generate solid waste in excess of state or local standards, or in excess of the capacity of local infrastructure, or otherwise impair the attainment of solid waste reduction goals?	☐	☐	☒	☐
e) Comply with federal, state, and local management and reduction statutes and regulations related to solid waste?	☐	☐	☒	☐

ENVIRONMENTAL SETTING

Water

Water supply to the project sites is provided by MMWD. Approximately 75 percent of the MMWD's supply comes from rainfall in the Mt. Tamalpais Watershed and hills of west Marin County. The MMWD maintains seven reservoirs and an extensive distribution system featuring 908 miles of pipes, 130 storage tanks, and 97 pump stations (MMWD 2023). The MMWD's water supply is supplemented by the Sonoma County Water Agency, whose supply comes from the Russian River System in Sonoma County.

Wastewater

Wastewater services in the Town are provided by Ross Valley Sanitary district (RVSD). The RVSD operates and maintains approximately 200 miles of collection sewer lines and 19 pump stations

which collect, pump, and transport approximately four million gallons of wastewater per day. Wastewater is treated at the Central Marin Sanitation Agency located in San Rafael.

Solid Waste

The Marin Sanitary Service provides waste disposal services for the site. According to the Marin Countywide Plan, there are two permitted landfills operate in the county. The Redwood Landfill would most likely to service the project's solid waste disposal needs.

DISCUSSION OF IMPACTS

a) Require or result in the relocation or construction of new or expanded water, wastewater treatment or storm water drainage, electric power, natural gas, or telecommunications facilities, the construction or relocation of which could cause significant environmental effects?

No Impact

The project would not require the relocation, expansion, or construction of any water, wastewater treatment, storm drainage, electric power, natural gas, or telecommunications facilities. The project would improve existing bridges and does not involve any public utility components. Thus, the construction or relocation of utilities would not result in significant environmental effects, and no impact would occur.

b) Have sufficient water supplies available to serve the project and reasonably foreseeable future development during normal, dry, and multiple dry years?

Less-than-Significant Impact

During construction, the project would require the use of water for construction activities such as watering soil stockpiles and exposed areas. The water needed for construction activities would be comparable to the water demand for similar types of construction projects and would not substantially increase existing demand for water within the Town. As described in *Section 4.2.14, Population and Housing,* the project would not construct new housing or provide services which would encourage or support growth within the Town. Therefore, the project would not result in any increase of potable water demand. The project would rehabilitate three existing bridges, which would not increase the demand for water during future normal, dry, and multiple dry years. The project would have no operational impact on water supply. The impact would be less than significant.

c) Result in a determination by the wastewater treatment provider which serves or may serve the project that it has adequate capacity to serve the project's projected demand in addition to the provider's existing commitments?

No Impact

Construction of the project would not generate additional wastewater and would not impact wastewater infrastructure. As described in *Section 4.2.14, Population and Housing,* the project would not construct new housing or support population growth. Therefore, implementation of the project would not directly or indirectly impact wastewater services. The project would not require any determination from the wastewater treatment provider. Therefore, no impact related to wastewater would occur.

d) Generate solid waste in excess of state or local standards, or in excess of the capacity of local infrastructure, or otherwise impair the attainment of solid waste reduction goals?

Less-than-Significant Impact

The project would generate a small quantity of solid waste during construction, but all generated waste would be properly disposed or recycled in an approved landfill or disposal facility with capacity to receive the waste. Non-hazardous waste would be disposed of at the Redwood Landfill, a certified landfill that serves the Town. Redwood Landfill is anticipated to have capacity through 2025, so the project's solid waste would be insufficient to exceed remaining capacity. Further, Zero Waste Marin encourages disposal at certified facilities to assure that materials are recycled to the greatest extent feasible. By recycling at Redwood Landfill, the project would maximize its potential for recycling, in keeping with local waste reduction efforts.

The minimal quantity of hazardous creosote-contaminated timber and soils would be disposed of at an appropriate facility permitted to handle hazardous materials. As the project would only temporarily generate solid waste, quantities would not overwhelm existing local infrastructure, and the project would not conflict with local waste reduction statutes, impacts would be less than significant.

e) Comply with federal, state, and local management and reduction statutes and regulations related to solid waste?

Less-than-Significant Impact

Marin County has a goal of zero waste by 2025. The joint powers authority overseeing zero waste efforts, Zero Waste Marin, encourages disposal at a certified facility during construction and demolition to comply with state waste reduction requirements. The project would dispose of solid waste at Redwood Landfill, a certified landfill. The project would therefore comply with local and state requirements for solid waste reduction. Therefore, the project would comply with all federal, state, and local management and reduction statutes and regulations related to solid waste. The impact would be less than significant.

4.2.20 Wildfire

If located in or near state responsibility areas or lands classified as very high fire hazard severity zones, would the project:	*Potentially Significant Impact*	*Less-than-Significant Impact with Mitigation Incorporated*	*Less-than-Significant Impact*	*No Impact*
a) Substantially impair an adopted emergency response plan or emergency evacuation plan?	☐	☐	☒	☐
b) Due to slope, prevailing winds, and other factors, exacerbate wildfire risks, and thereby expose project occupants to pollutant concentrations from a wildfire or the uncontrolled spread of a wildfire?	☐	☐	☒	☐
c) Require the installation or maintenance of associated infrastructure (such as roads, fuel breaks, emergency water sources, power lines or other utilities) that may exacerbate fire risk or that may result in temporary or ongoing impacts to the environment?	☐	☐	☐	☒
d) Expose people or structures to significant risks, including downslope or downstream flooding or landslides, as a result of runoff, post-fire slope instability, or drainage changes?	☐	☐	☒	☐

ENVIRONMENTAL SETTING

Pursuant to Government Code Section 51175-89, the California Department of Fire and Forestry (CAL FIRE) recommends FHSZs throughout the state. These are mapped taking relevant factors such as fuels, terrain, and weather into account. FHSZs are described based on their potential to cause building ignition. Areas assessed for fire hazards throughout the state are categorized as LRAs and state responsibility areas (SRA) depending on the entity responsible for fire protection.

The RVFD currently provides fire protection and emergency response services to the communities of Ross, San Anselmo, Sleepy Hollow and Fairfax. The RVFD operates four fire stations. RVFD Station 21, located at 10 Park Road, provides fire protection and paramedic services to the project sites. RVFD Station 21 is located approximately one-half mile south of Marin Road Bridge, one-quarter mile south of Spruce Road Bridge, and one mile east of Canyon Road Bridge.

Marin Road

The Marin Road Bridge site is within a High FHSZ within the LRA (CAL FIRE 2024). Areas approximately .1 miles east of the site are in a Moderate FHSZ and surrounding areas to the west are in the High FHSZ. The nearest Very High FHSZ is approximately one half mile west of the project site. The Marin Road Bridge is on a dedicated evacuation route for residents to evacuate towards Sir Francis Drake Boulevard (RVFD, Town of Fairfax 2025).

Spruce Road

The Spruce Road Bridge site is within a High FHSZ within the LRA (CAL FIRE 2024). Areas approximately .1 miles east of the site are in a Moderate FHSZ and surrounding areas to the west are in the High FHSZ. The nearest Very High FHSZ is approximately one-half mile west of the project site. Spruce Road Bridge is not located along a designated evacuation route (RVFD, Town of Fairfax 2025).

Canyon Road

The Canyon Road Bridge site is within a Moderate FHSZ in the LRA (CAL FIRE 2024). Areas surrounding the site to the east and west are in the Moderate FHSZ in the LRA and SRA. Areas approximately 0.3 miles south of the site are within a High FHSZ in the SRA. The nearest Very High FHSZ is approximately 0.30 miles north of the project site.

DISCUSSION OF IMPACTS

a) Substantially impair an adopted emergency response plan or emergency evacuation plan?

Marin Road Bridge

Less-than-Significant Impact

The Marin Road Bridge is located along a designated evacuation route. Project work at Marin Road Bridge would not require any lane or bridge closure. Access would be maintained over the bridge throughout project construction. Therefore, project work at Marin Road Bridge would not substantially impair an emergency response plan or evacuation plan. No impact would occur.

Spruce Road Bridge

No Impact

During construction the Spruce Road would undergo temporary closures for vehicular traffic. As stated in *Section 3.0, Project Description*, traffic would be detoured via Arroyo Road and Azalea Drive, as shown in Figure 13. This detour would be minimal and would not obstruct any designated evacuation routes. Therefore, project work at Spruce Road Bridge would not substantially impair an emergency response plan or evacuation plan. No impact would occur.

Canyon Road Bridge

Less-than-Significant Impact

The Canyon Road Bridge would be closed off to motorized traffic for approximately four to five hours overnight while the deck is being sealing. Although Canyon Road is not a designated emergency evacuation route, the road is the only access point to and from the neighborhood it serves. As described in Section 3.0 Project Description, in order to ensure the safety of residents during the deck sealing period, a first-response crew and vehicle from RVFD would be positioned on the south end of the bridge for any emergency situations. Secondly, if an emergency crossing is needed during the short duration of bridge closure, the bridge would be opened for crossing by covering the sealing agent with plywood. Prior notifications would be sent to the neighborhood to inform them of the work schedule and details. With these measures incorporated into project design, project work at Canyon Road Bridge would not impair any emergency response plan. The impact would be less than significant.

b) Due to slope, prevailing winds, and other factors, exacerbate wildfire risks, and thereby expose project occupants to pollutant concentrations from a wildfire or the uncontrolled spread of a wildfire?

Less-than-Significant Impact

None of the project sites are within a Very High FHSZ; however, the Marin Road and Spruce Road Bridges are within a High FHSZ, and the Canyon Road Bridge is within 0.30 miles of a High FHSZ. During construction, it is possible for construction equipment and machinery being used on-site to create sparks which could ignite nearby vegetation. The project sites are all within one mile of the RVFD Station 21; therefore, any accidental ignition would be controlled by the RVFD. There are no existing on-site conditions which would increase this temporary risk to a significant level, such as extremely dry vegetation, high winds, or steep slopes. The risk induced by construction work would be similar to the risk caused by other similar types of construction projects. Therefore, construction of the project would not exacerbate wildfire risks or expose occupants to pollutant concentrations or the uncontrolled spread of a wildfire.

Once construction is finished operational use of the project sites would remain the same. The project would not build any new structures or change operations in a way that would exacerbate wildfire risk. The impact would be less than significant.

c) Require the installation or maintenance of associated infrastructure (such as roads, fuel breaks, emergency water sources, power lines or other utilities) that may exacerbate fire risk or that may result in temporary or ongoing impacts to the environment?

No Impact

The project involves bridge repairs and does not require the construction of any associated infrastructure such as roads, fuel breaks, emergency water sources, power lines, or other utilities that may exacerbate fire risk or result in temporary or ongoing impacts to the environment. No impact would occur.

d) Expose people or structures to significant risks, including downslope or downstream flooding or landslides, as a result of runoff, post-fire slope instability, or drainage changes?

Less-than-Significant Impact

As described in *Section 4.2.10, Hydrology and Water Quality*, the project would not substantially alter drainage patterns. The project would require minimal amounts of grading and would not change the overall topography within the project sites. Therefore, the project would not expose people or structures to risks resulting from post-fire instability. The impact would be less than significant.

4.2.21 Mandatory Findings of Significance

	Potentially Significant Impact	Less-than-Significant Impact with Mitigation Incorporated	Less-than-Significant Impact	No Impact
a) Does the project have the potential to substantially degrade the quality of the environment, substantially reduce the habitat of a fish or wildlife species, cause a fish or wildlife population to drop below self-sustaining levels, threaten to eliminate a plant or animal community, substantially reduce the number or restrict the range of a rare or endangered plant or animal or eliminate important examples of the major periods of California history or prehistory?	☐	☒	☐	☐
b) Does the project have impacts that are individually limited, but cumulatively considerable? ("Cumulatively considerable" means that the incremental effects of a project are considerable when viewed in connection with the effects of past projects, the effects of other current projects, and the effects of probable future projects)?	☐	☒	☐	☐
c) Does the project have environmental effects that will cause substantial adverse effects on human beings, either directly or indirectly?	☐	☒	☐	☐

DISCUSSION OF IMPACTS

a) Does the project have the potential to substantially degrade the quality of the environment, substantially reduce the habitat of a fish or wildlife species, cause a fish or wildlife population to drop below self-sustaining levels, threaten to eliminate a plant or animal community, substantially reduce the number or restrict the range of a rare or endangered plant or animal or eliminate important examples of the major periods of California history or prehistory?

Less-than-Significant Impact with Mitigation Incorporated

Implementation of the project would not substantially degrade the quality of the environment, reduce the habitat of a fish or wildlife species, cause a fish or wildlife population to drop below self-sustaining levels, threaten to eliminate a plant or animal community, or reduce the range of a rare or endangered plant or animal. Implementation of mitigation measures presented in *Section 4.2.4, Biological Resources*, would mitigate potential significant impacts that could substantially degrade the quality of the environment or impact biological resources. As discussed in Section *4.2.5, Cultural Resources*, and *Section 4.2.18, Tribal Cultural Resources*, impacts to potentially unknown resources within the project site would be mitigated to a less than significant level by Mitigation Measure CUL-1 and Mitigation Measure CUL-2. Given the fact that potential impacts to biological and cultural resources would primarily occur during active construction (not long term) and that measures have been identified to reduce these temporary

impacts, impacts would not be considered significant. Impacts would be less than significant with mitigation incorporated.

b) Does the project have impacts that are individually limited, but cumulatively considerable? ("Cumulatively considerable" means that the incremental effects of a project are considerable when viewed in connection with the effects of past projects, the effects of other current projects, and the effects of probable future projects)?

Less-than-Significant Impact with Mitigation Incorporated

Section 15130 of the CEQA *Guidelines* requires an evaluation of potential environmental impacts when the project's incremental effect is cumulatively considerable. "Cumulatively considerable" means that the incremental effects of an individual project are considerable when viewed in connection with the effects of past projects, the effects of other current projects, and the effects of probable future projects. These impacts can result from a combination of the proposed project together with other projects causing related impacts. The cumulative impact from several projects is the change in the environment which results from the incremental impact of the project when added to other closely related past, present, and reasonably foreseeable probable future projects.

Other projects in the vicinity of the three bridge sites are summarized below in Table 3.

Table 3. Summary of Projects Considered in the Cumulative Impact Analysis

PROJECT NAME	PROJECT LOCATION	PROJECT STATUS	DISTANCE FROM SITE		
			MARIN ROAD	SPRUCE ROAD	CANYON ROAD
Creek Road Bridge Project	Along Creek Road south of its intersection with Dominga Avenue	Currently under CEQA review; construction anticipated in 2028	0.75 miles south	0.35 miles south	1 mile east
Meadow Way Bridge Project	Along Meadow Way at its intersection with Cascade Drive	Construction to start in 2027	1.24 miles southwest	0.90 miles southwest	0.34 miles east
Azalea Avenue Bridge Project	Intersection of Azalea Avenue and Arroyo Road	Project designs under development	0.34 miles south	0.06 miles north	1.17 miles northeast

The bridge repair projects would not change the existing operational use of the roadways or bridges. Therefore, any project impacts that could contribute to a cumulative impact would be predominately related to construction activities. Construction activities could result in air quality impacts and noise impacts from construction equipment and vehicles, and transportation

impacts due to project work which may impact circulation through and around the project sites. Such impacts would be temporary and would generally be focused in the project site vicinity.

Each project would implement basic construction measures as recommended by the BAAQMD during construction to reduce fugitive dust emissions from construction. Therefore, none of the projects would contribute to a cumulatively considerable air quality impact.

Temporary delays could result from construction work at the project sites due to the need for lane or road closures. If other projects in the vicinity of the three bridge sites also require lane or road closures, a potentially significant cumulative transportation impact could occur.

Construction at the Marin Road Bridge and Spruce Road Bridge would take approximately ten working days to complete, and construction at Canyon Road Bridge would take approximately fifteen days to complete. During construction, Marin Road Bridge would remain entirely open; therefore, no cumulative transportation impacts would occur from construction at this site. Construction at Spruce Road Bridge would require closures for a limited number of hours during the 10-day working period, which may generate delays around the project site.

Construction at Canyon Road Bridge would require approximately fifteen working days to complete and would require the bridge to be closed for a few hours during one night of construction. There are no projects within the immediate vicinity of the Canyon Road Bridge site which would also require lane or road closures. Additionally, since the closure would occur at night in a low-density residential neighborhood, this closure would not result in a cumulatively considerable transportation impact.

Due to the limited scope of direct physical impacts to the environment associated with construction, the project's impacts are project-specific in nature. Compliance with the conditions of approval issued for the proposed development would further assure that project-level impacts would not be cumulatively considerable. Consequently, the project along with other cumulative projects would create a less-than-significant cumulative impact with respect to all environmental issues.

Given the project does not result in any significant impacts that cannot be completely mitigated to less-than-significant levels, the temporary nature of construction related impacts, and compliance with all regulations adopted to protect the environment, the proposed project would not result in impacts that are cumulatively considerable.

c) Does the project have environmental effects that will cause substantial adverse effects on human beings, either directly or indirectly?

Less-than-Significant Impact

Potential impacts to human beings have been addressed in this IS/MND, including impacts related to air quality, noise, and transportation. Project construction activities would cause potential temporary impacts to humans due to the generation of criteria air pollutants and fugitive dust emissions. As described in *Section 4.2.3, Air Quality*, the project would implement BAAQMD-recommended fugitive dust control measures as Mitigation Measure AIR-1, which would reduce potential air quality impacts to a less-than-significant level.

As discussed in *Section 4.2.13, Noise*, the project would generate noise that may temporarily substantially increase existing ambient noise levels above the Town's threshold. The project would implement Mitigation Measure NOISE-1 to reduce potential impacts to a less-than-significant level.

Transportation impacts resulting from the project were found to be less than significant, and no mitigation measures are required. As such, the project would not have environmental effects that would cause substantial adverse effects on human beings. The impact would be less than significant with mitigation incorporated.

5.0 REFERENCES

Altman, B. and R. Sallabanks. 2000. Olive-sided Flycatcher (*Contopus cooperi*). In The Birds of North America, No. 502 (A. Poole and F. Gill, Ed.). The Birds of North America, Inc. Philadelphia, PA.

Bay Area Air Quality Management District (BAAQMD). 2017a. Air Quality Standards and Attainment Status. Available online at: https://www.baaqmd.gov/about-air-quality/research-and-data/air-quality-standards-and-attainment-status. Accessed July 2025.

Bay Area Air Quality Management District (BAAQMD). 2017b. Final 2017 Clean Air Plan. Available online at: https://www.baaqmd.gov/~/media/files/planning-and-research/plans/2017-clean-air-plan/attachment-a_-proposed-final-cap-vol-1-pdf.pdf. Accessed July 2025.

Bay Area Air Quality Management District (BAAQMD). 2022. 2022 CEQA Guidelines. Available online at https://www.baaqmd.gov/plans-and-climate/california-environmental-quality-act-ceqa/updated-ceqa-guidelines. Accessed September 17, 2024.

California Department of Conservation (CDOC). 2025. California Important Farmland Finder. Available online at: https://www.arcgis.com/home/item.html?id=8ab78d6c403b402786cc231941d1b929. Accessed July 2025.

California Department of Forestry and Fire Protection (CAL FIRE). 2024. Fire Hazard Severity Zone Viewer. Available online at: https://fire-hazard-severity-zones-rollout-calfire-forestry.hub.arcgis.com/pages/access-map. Accessed August 25, 2025.

California Department of Transportation (Caltrans). 2018. California State Scenic Highway System Map. Available online at: https://www.arcgis.com/apps/webappviewer/index.html?id=465dfd3d807c46cc8e8057116f1aacaa. Accessed July 2025.

California Department of Transportation (CalTrans). 2024. Bridge Preventative Maintenance Program (BPMP) Guidelines for Local Agencies. Published April 2024. Available at: https://dot.ca.gov/-/media/dot-media/programs/local-assistance/documents/hbp/2024/bpmp-guidelines-april2024.pdf. Accessed August 2025.

California Department of Water Resources. 2025. Groundwater Basin Boundary Assessment Tool. Available online at: https://gis.water.ca.gov/app/bbat/. Accessed August 2025.

California Geological Survey (CGS). 2025. Earthquake Zones of Required Investigation. Available online at: https://maps.conservation.ca.gov/cgs/informationwarehouse/eqzapp/. Accessed August 2025.

Cicero, C. 2000. Oak titmouse (*Baeolophus inornatus*). In The Birds of North America Online (A. Poole, Ed.). Ithaca: Cornell Lab of Ornithology; Retrieved from the Birds of North America Online: http://bna.birds.cornell.edu/bna/species/485a

County of Marin. 2025. MarinMap – Map Viewer. Available online at: https://experience.arcgis.com/experience/8f2b67be060945d48e779eac2d2bc1df#data_s=id%3AdataSource_6-19668e2f6a8-layer-126-19778f4d8ae-layer-343%3A57798. Accessed August 2025.

Federal Emergency Management Agency (FEMA). 1977. Flood Insurance Study, Town of Fairfax, California.

Governor's Office of Planning and Research, State of California General Plan Guidelines, October 2003 (in coordination with the California Department of Health Services).

Governor's Office of Planning and Research (OPR). 2018. CEQA and Climate Change: Addressing Climate Change Through California Environmental Quality Act (CEQA) Review. Governor's Office of Planning and Research Technical Advisory: Sacramento.

Highway Research Board. 1971. National Cooperative Highway Research Program Report 117, Highway Noise: A Design Guide for Highway Engineers. Available online at: https://onlinepubs.trb.org/Onlinepubs/nchrp/nchrp_rpt_117.pdf. Accessed August 2025.

Lowther, Peter E. 2000. Nuttall's Woodpecker (*Picoides nuttallii*), The Birds of North America Online (A. Poole, Ed.). Ithaca: Cornell Lab of Ornithology; Retrieved from the Birds of North America Online: http://bna.birds.cornell.edu/bna/species/555.

Marin Municipal Water District (MMWD). March 2017. Water Resources Plan 2040. Available at: https://www.marinwater.org/sites/default/files/2020-09/Water%20Resources%20Plan%202040.pdf. Accessed August 7, 2025.

Marin Municipal Water District. 2023. About Our Water System. Available online at: https://www.marinwater.org/OurSystem#:~:text=Chartered%20in%201912%2C%20Marin%20Water,water%20within%20its%20distribution%20system. Accessed August 2025.

Miller Pacific Engineering Group. 2014. Geotechnical Consultation Memorandum. File 1665.03bpmpltr.doc. Novato, California.

Natural Resource Conservation Service (NRCS). 2019. Web Soil Survey. Available online at: https://websoilsurvey.nrcs.usda.gov/app/. Accessed August 2025.

Office of Environmental Health Hazard Assessment (OEHHA). 2015. Air Toxics Hot Spots Program. Risk Assessment Guidelines, Guidance Manual for Preparation of Health Risk Assessments. Published February 2015. Available online at: https://oehha.ca.gov/sites/default/files/media/downloads/crnr/2015guidancemanual.pdf. Accessed July 2025.

Ross Valley Fire Department (RVFD) and Town of Fairfax. 2025. Your neighborhood zones. Available online at: https://firesafemarin.org/prepare-yourself/evacuation-guide/evacuation-maps/#gsc.tab=0. Accessed August 2025.

San Francisco Bay Regional Water Quality Control Board. 2017. Water Quality Control Plan (Basin Plan) for the San Francisco Bay Basin. Available online at: https://www.waterboards.ca.gov/sanfranciscobay/basin_planning.html. Accessed October 2025.

Town of Fairfax. 2021. Fairfax Climate Action Plan 2030. Adopted by the Fairfax Town Council on July 7, 2021. Available online at https://www.townoffairfax.org/documents/climate-action-plan_2030/.

U.S. Fish and Wildlife Service (USFWS). 2012. Protocol for surveying proposed management activities that may impact northern spotted owl. Revised. Available online at: http://www.fws.gov/yreka/ES/2012RevisedNSOprotocol-2-15-12.pdf. Accessed September 2017.

U.S. Geological Survey (USGS) Working Group on California Earthquake Probabilities. 2003. Earthquake Probabilities in the San Francisco Bay Region 2002-2031. Open File Report 03-214. U.S. Department of the Interior, U.S. Geological Survey.

APPENDIX A. CANYON ROAD BRIDGE ARBORIST REPORT

BROOKS TREE CARE
54 Claire Way
Tiburon California 94920
415.388.1232

WRA, Inc.
2169-6 East Francisco Blvd
San Rafael, California 94901
For: Town of Fairfax BPMP
Canyon Rd. Bridge Project

11/18/14

Canyon Rd. Bridge Project Arborist

Scope of Work:

Attend a meeting with team to discuss preservation measures for a Redwood tree immediately adjacent to Canyon Road Bridge in Fairfax, California. Prepare a letter with comments to share with team for review.

To that effort:

The following comments and recommendations are in response to an informational meeting presenting construction requirements for the installation of an engineered concrete wall adjacent to a cluster of 3 redwood trees, Sequoia sempervirens, co-joined on a single base growing at the North end of Canyon Road Bridge in Fairfax, California.

The wall will require 'Soil Nails' to secure it into a substrate of solid ground in order to secure the wall from toppling into San Anselmo Creek due to soil slump. A soil nail is a metal rod that is grouted into a 4" diameter hole drilled cross sectionally to a length of about 15'.

The primary engineering question poised to me was: "Will the soil nails adversely impact the health and safety of the redwood tree/s?"

Based on my observation of the exposed roots of toppled and eroded redwood trees and my study of tree physiology, I would expect that any damage caused by the drilling of the holes in order to install the soil nails would not significantly impact the health or stability of the redwood trees.

It is impossible to know with absolute certainty that, if, root/s that could be severed by the drilling, might be part of a major trunk line that leads to a sizable amount of root system loss. The assumption being that this potential loss would lead to the tree's mortality, or compromised vigor and aesthetics or safety concerns due to limb or tree parts loss or tree stability issues.

Based on the number and assumed locations of the soil nails, I would not expect to encounter major trunk line roots. I expect that any damage inflicted on the secondary branching of the root system would heal over and recover most of it's original function quickly due to tree root system's abilities to fuse and redirect carrying capacity of fluid in both storage and delivery directions. The amount of expected root damage is highly improbable to cause health problems, death or tree stability problems.

If my conclusion is wrong, the damage would be observable by seeing limb or tree part death, or loss of vigor in the canopies of the tree/s and mediation actions can be taken. Pre-emptive foliar crown reduction could be done in advance of drilling operations as a precautionary action.

In order to detect any significant damage to the trees roots, I recommend a monitoring program that would consist of visiting the site, post drilling, by a 30-, 60- and 90-day interval, followed by a site visit one-year later. If I am retained to do the monitoring, I would need to know who to address any concerns raised during monitoring. It should be noted that presently the architecture of the trees is less than optimal. I am not willing to comment further because I did not do a thorough examination of the trees foliar crowns, as it was not part of the scope of work I was contracted for.

A question about the compatibility of the concrete grout that will encapsulate the steel rods when in contact with the roots was also raised. It is of no concern to me based on my experience with excavated and severed redwood tree roots in direct contact with freshly poured concrete that I have observed in previous construction projects. These trees have shown no ill effect, initially or after prolonged monitoring from exposure to the chemical compounds of cement.

My greater concern was for the ability of the wall to sustain the forces of the continually expanding roots and trunk. This concern was addressed by including an expansion joint/s into the final design that the engineer will include.

On exploration of the existing conditions of the tree in relation to the stacked bags of concrete that are presently at the location, it was observed that the tree's base has expanded and swelled onto and around the top of the existing wall. The engineer noted the condition and opined that a cutout can be designed into the wall to allow for the swelling in order to avoid cutting into the tree or roots.

The existing wall was observed to have moved towards the creek from its presumed original location. It is unknown whether the wall has moved due to soil slump or tree expansion.

In order to assure best practices for the tree's preservation, I will need to examine the roots and base after the existing wall is removed in preparation for the construction of the new wall. These observations could prove to be critical for recommendations to the engineer if unsuspected conditions are present.

During construction of the new wall, it needs to be understood that cutting into the tree or cutting roots is to be avoided to the greatest degree possible. I will need to see the extent of any root cutting before cuts are made to determine probable result of cuts and to discuss remediation action. It is my expectation that this ideal will be understood and shared with the wall constructors.

I will need to understand how drilling equipment and support machinery will be staged and what type of access will be required to allow for operations to determine if the tree/s would have to be pruned or armored to protect them from impact. An exclusion fence will need to be installed to the greatest extent possible around the trees/s and possibly other root zone compaction disbursement measures will need to be installed to protect the roots from soils compaction caused by vehicle and footprint impact.

After the concrete for the wall is properly cured, backfilling the voids around the roots should be done with a substrate that is of a courser texture and of near equal Ph to the present soil in order to keep oxygen permeation active. I need more information to understand the backfilling process. It occurs to me that the backfill may have to be installed via a slurry method, which leads to a question of drainage considerations for the wall.

In conclusion, I expect that the construction of an engineered concrete wall with allowances made for the expected expansion of the tree will be compatible with the continued health, vigor and stability of the redwood tree/s.

Peter Brooks
Certified Arborist #319
Tree Risk Assessor Qualified

APPENDIX B. NATURAL ENVIRONMENT STUDIES

Proposed Marin Road Bridge

BPMP Project

Natural Environment Study

Marin Road Bridge BPMP

Town of Fairfax, Marin County

Bridge Number: 27C 0143

Project Number: BPMP 5277 (026)

Locator: [District 4]-[MRN]-[0]-[FRFX]

September 2017

Caltrans
CALIFORNIA DEPARTMENT OF TRANSPORTATION

Proposed Marin Road Bridge
BPMP Project
Natural Environment Study

STATE OF CALIFORNIA
Department of Transportation
Town of Fairfax
BPMP 5277 (026)

Prepared By: Micki Kelly Date: 9/8/2017
Micki Kelly, PWS, Principal
415-482-9703
Kelly Biological Consulting
San Anselmo, CA

Prepared By: Pat Valcarcel Date: 9/15/17
Patricia Valcarcel, Wildlife Biologist
415-524-7252
WRA, Inc.
San Rafael, California

Approved By: Garrett Toy Date: 9/13/17
Garrett Toy, Town Manager
415-453-1584
Town of Fairfax
Fairfax, California

Recommended for Concurrence by (Caltrans): _____ Date: _____
Hugo Ahumada, Associate Environmental Planner
510-622-8790
Office of Local Assistance District 4
Caltrans, District 4
Oakland, California

Concurred By: _____ Date: _____
Thomas Holstein, Environmental Branch Chief
510-286-6371
Office of Local Assistance
Caltrans, District 4
Oakland, California

For individuals with sensory disabilities, this document is available in Braille, large print, on audiocassette, or computer disk. To obtain a copy in one of these alternate formats, please call or write to Caltrans, Attn: Local Assistance, District 4, 111 Grand Avenue, Oakland, California 94623; (510) 286-6371 Voice, or use the California Relay Service (800) 735-2929 (TTY), (800) 735-2929 (Voice) or 711.

This page intentionally left blank

Summary

Purpose and Need.

Caltrans determined that Marin Road Bridge over Fairfax Creek, in Fairfax needs preventative maintenance work. The purpose of conducting the repair work is to extend the life of the bridge.

Project Description

Marin Road is a single span concrete earth-filled closed arch structure, constructed over Fairfax Creek presumably circa 1930. The bridge is on a residential street leading to Sir Francis Drake Boulevard, a major arterial through the town of Fairfax. The structure is approximately 41 feet long and a little over 26 feet wide. It supports two lanes of traffic nearly 10 feet above the creek bed. There are no as-built plans available from the original design of the bridge, though a new General Plan (GP) from field measurements has been developed for the bridge. There are no sidewalks on the bridge but a separate steel pedestrian/bicycle bridge exists for non-motorized travelers immediately upstream of this bridge. (The latter bridge is not in the program.)

Marin Road Bridge is not eligible for National Register of Historic Places (NRHP) listing. It has a Sufficiency Rating (SR) of 60.0, but is flagged as neither Structurally Deficient (SD) nor Functionally Obsolete (FO) in the latest (2016) Caltrans Bridge Inspection Report (BIR).

The BPMP repairs for Marin Road Bridge and the method of construction would consist of:

- Repair of the toppling bridge wingwall. The leaning, rotating and separated concrete wingwall on the southeast side (downstream of the bridge) would be repaired in-situ. The wingwall is approximately 10 feet long and eight feet high. It would be reconnected to the existing bridge with steel dowels and rebar tied to its reinforcement, exposed by removing a strip of the wingwall concrete next to the bridge. The wingwall would be surfaced with a fresh layer of lightly-reinforced air-blown concrete (shotcrete), and stabilized with at least a couple of soil nails pinning it to the soil.

- Repair of the tattered rock slope protection (RSP) around the above wingwall. The light rocks making up the scattered riprap would be collected and a course of rock riprap would be sized suitable for the top anticipated creek flow velocity. The soil volume below the bottom of the wingwall would be excavated along the front for a width and depth of two feet each to create a trench to place the rock in as a buttress against future scour. On the free edge of the wingwall not connecting with the bridge headwall a similar type of excavation would take place to place rock and connect to the RSP buttressing at the foot of the wall. The surface of the rock riprap would be flush with concrete wingwall, the creek bed and the embankment in order not to protrude into the waterway and impact the flows or flow capacity.

- Repair of the structural damage to another wingwall. This second wingwall is on northwest side (upstream of the bridge) and vertical. It comes into the bridge headwall at an angle and is undermined, cracked horizontally near the bottom for five-six feet and dropped five to six inches below the crack due to gravity. The repair work would consist of cleaning the damaged and cracked concrete, patching the crack with special grout to prevent the further deterioration of this bridge

structural element and burying some rock below the creek bed surface and in front of the wingwall to arrest its further undermining. Again, the surface of the rock riprap would be flush with the creek bed in order not to protrude into the waterway and impact the flows or flow capacity.

- Repair of structural concrete spalls in the soffit of the structure. This is a manual operation on a handful of such structurally damaged spots in the concrete. After cleaning the rust from the steel rebars and removing the unsound concrete within the spall, a special agent, such as epoxy grout, would be applied and made flush with the concrete surfaces to protect the reinforcement and patch the concrete.

An Area of Potential Effects (APE) drawing and a preliminary Bridge General Plan for the repairs have been developed for this bridge work. The work would be at both the deck and below deck levels and is expected to take as many as ten working days from start to finish. The bridge would remain entirely open to motorized and non-motorized traffic. A flag person directing traffic at times may be necessary but traffic queuing is not expected.

Habitat Impacts

No permanent impacts are anticipated to occur from the proposed project. However, the proposed project would temporarily impact 2,613 square feet (0.06 acre, approximately 295 linear feet) of Perennial Stream ("other waters"). No other temporary impacts direct or indirect are anticipated.

Special-Status Species

The project would not adversely affect special-status plants, special-status wildlife species, or breeding birds. Although no special-status fish species are anticipated to be present, the project **may affect, but is not likely to adversely affect** Pacific Salmonid Essential Fish Habitat (EFH). Informal consultation with National Marine Fisheries Service (NMFS) would be required to assess impacts of the proposed project as well as to provide avoidance and minimization measures to be implemented to reduce impacts to EFH and fish passage.

The proposed project construction would result in temporary effects to EFH; however, no permanent adverse effects are anticipated to EFH. The proposed project is scheduled to occur during the dry season when flows are low and fish are least likely to be present or passing through the BSA. A total barrier to anadromous fish including steelhead is present downstream of the BSA. There is no potential for steelhead to be present under current conditions; however, future restoration efforts may restore anadromy to the BSA. One pool is present in the work area and will be de-watered during project activities. If stream flow is present, temporary stream diversion and de-watering activities may be necessary. Following consultation with NMFS, if fish are present, a fish rescue would be conducted to relocate any native fish present during project de-watering activities. The bridge work would add material beneath the bed of the creek but would not add material to the surface of the creek, create a barrier across the channel, decrease flows, change substrate size, or channelize the stream. The stream channel and banks would be restored to near pre-project conditions following the completion of bridge work, recreating the gradient which currently exists. The proposed project would use the previously excavated cobble and gravel substrate to mimic the channel conditions prior to excavation including creek gradient. As such, the project would not change fish passage conditions. Temporary impacts to EFH are anticipated during proposed project activities through temporary de-watering, ground disturbance, and temporary stream diversion, if necessary. No permanent adverse effects to EFH are anticipated because

fish passage conditions and available habitat would remain unchanged following completion of the proposed project and the BSA does not contain spawning or rearing habitat. To summarize, the project **may affect, but is not likely to adversely affect** EFH for Pacific salmonids.

Invasive Species

The species found in the BSA that are listed on the Cal-IPC list as High are fennel (*Foeniculum vulgare*), English ivy (*Hedera helix*), French broom (*Genista monspessulana*), Himalayan blackberry, and hedgehog dogtail (*Cynosurus echinatus)*. Several species with moderate rating were also observed, big-leaf periwinkle (*Vinca major*), Italian thistle (*Carduus pycnocephalu*s), slender wild oat (*Avena barbata*), panic grass (*Ehrharta erecta*), Bermuda buttercup (*Oxalis pes-carpe*), sheep sorrel (*Rumex acetosella*). The proposed project will remove individuals of those species in areas where the vegetation is removed for construction activities, and stabilize the soil with appropriate erosion control measures, as needed.

New Zealand mud snail (NZMS; *Potamopyrgus antipodarum*) are documented within Fairfax Creek. Measures such a washing equipment are included here to avoid the spread of the mud snail. With implementation of the avoidance and minimization efforts discussed in this text, the proposed project would not result in the spread of invasive species.

Resource Permits

There would be impacts to the Perennial Stream (i.e. “other waters” or ‘Waters’). A preliminary Jurisdictional Determination would be submitted to the United States Army Corps of Engineers (USACE) for verification. Permits that would be required include a California Department of Fish and Wildlife (CDFW) Streambed Alteration Agreement (CFGC 1602), Regional Water Quality Control Board (RWQCB) Clean Water Act (CWA) 401 certification, and USACE CWA 404 nationwide permit. In May 2016, CDFW and RWQCB indicated that depending on level of impacts, compensatory mitigation may be necessary.

This page intentionally left blank

Table of Contents

Summary.....i
Chapter 1 – Introduction.....1
Chapter 2 – Study Methods.....7
Regulatory Requirements.....7
Wetland and Waters.....8
Invasive Species.....9
Protected Species.....9
Local Policies and Ordinances.....11
Studies Required.....11
Personnel and Survey Dates.....14
Agency Coordination and Professional Contacts.....14
Limitations That May Influence Results.....14
Chapter 3 – Results: Environmental Setting.....15
Existing Biological and Physical Conditions.....15
Biological Study Area.....15
Physical Conditions.....15
Biological Conditions in the BSA.....16
Invasive Species.....19
Regional Species and Habitats and Natural Communities of Concern.....19
Chapter 4 – Results: Biological Resources, Discussion of Impacts and Mitigation.....57
Habitats and Natural Communities of Special Concern.....57
Riparian WOODLAND.....57
Perennial Stream (“Other Waters”).....58
Special-Status Plant Species.....63
Special-Status Wildlife Species.....64
EFH and Fish Passage.....69
Special-Status and non-Special-Status Nesting Birds.....71
Chapter 5 – Conclusions and Regulatory Determinations.....74
Federal Endangered Species Act Consultation Summary.....74
Essential Fish Habitat Consultation Summary.....74
California Endangered Species Act Consultation Summary.....74
Wetlands and Other Waters Coordination Summary.....74
Invasive Species.....74
Other.....75
Chapter 6 – References.....76

List of Figures

Figure 1. Location Map.....3
Figure 2. Proposed Bridge Plan 5
Figure 3a. Biological Communities within the Biological Study Area.....17
Figure 3b. Biological Communities Impacted within the Biological Study Area 59
Figure 4. Special-Status Plant Species within 5 kilometers (3 miles) of the Biological Study Area 65
Figure 5. Special-Status Wildlife Species within 5 kilometers (3 miles) of the Biological Study Area 67

List of Tables

Table 1: Listed, Proposed Species, and Critical Habitat Potentially Occurring or Known to Occur in the BSA.....21
Table 2: Direct Impacts of the Proposed Project to Natural Communities of Special Concern. 57
Table 3: Direct Impacts of the Proposed Project to Jurisdictional Areas by Agency.....57

List of Appendices

Appendix A – Plant and Wildlife Species Observed during the Site Visits
Appendix B – USFWS Official Species List
Appendix C – Preparers Qualifications

Chapter 1 – Introduction

Purpose and Need

Caltrans determined that Marin Road Bridge, in the Town of Fairfax (Town) over Fairfax Creek needs preventative maintenance work (discussed below). The purpose of conducting the repair work is to extend the life of the bridge.

Background on Proposed Fairfax BPMP (Multi-bridge) Project

The entire Fairfax BPMP (Multi-bridge) Project consists of three existing bridges proposed to undergo preventive maintenance repairs through the HBP's Bridge Preventive Maintenance Program (BPMP). Two of the bridges, on Marin Road and Spruce Road, are within a few blocks of each other, while the third creek crossing, Canyon Road Bridge, is approximately 2.35 miles away from the other two. This NES addresses Marin Road Bridge. The other two bridges have separate NES documents.

For bridges that require work in the creek, it would be done during the dry season and the environmentally permissible window when these segments of the waterway are at their lowest flow rates. The work area would be dewatered by temporarily diverting any potential flows from the work area, using means such as short dams made with sand bags, and/or longitudinal piping to bypass the work areas. Stagnant water would be pumped out to create a completely dry work area. Best Management Practice (BMP) measures and a Water Quality Protection Plan would be implemented throughout the work period. Old debris and drift would be removed from the waterway. Water quality and turbidity would be controlled by the contractor and periodic tests required by the permits would be performed.

No trees would be cut for the construction operations. However, limited trimming and cutting of vegetation around the worksite, as well as clearing and grubbing, are expected. For application of methacrylate and polyester concrete, the contractor would be required to conform to the recommendations of a certified industrial hygienist for safe worksite operations. Hours of operations would be limited to regular daylight work hours, but at least one nighttime operation may be expected.

Most of the various construction equipment used at the three sites would be relatively compact, including air compressors, generators, a shot blaster, shotcrete pumps and hoses, concrete saws, concrete chipping guns and drills, and soil drilling equipment. Construction vehicles moving in and out of the construction area would be a small loader, such as a Bobcat with backhoe or bucket attachments, polyester concrete mix truck, paver, roller, small excavator, a cold planing machine, snooper lift truck, utility pickup trucks, flatbed trucks, dump trucks, dump trailers, a truck-mounted crane, concrete delivery trucks and a testing van. These vehicles and equipment would not be all at the site at the same time but move in and out, and would be staged within the APEs, as needed. No new easement or temporary or permanent right-of-way (ROW) would be necessary. Also, no utility relocations would be necessary for the work on any of the three bridges. All access to the project and staging areas would be via the areas within the APEs. Equipment, large or small, would be lowered onto the creek bed with a truck-mounted crane to avoid ramping from the top to the creek bed for vehicles. Work would be taking place both from the bridge topside as well as down below in the creek at two locations (Marin and Canyon). The operations would be done manually, as well as

with power equipment. Rocks for riprap would also be lowered one by one onto the needed areas with a crane.

Proper signage, indicating construction ahead and any road closure, would be installed at all three sites on both sides of each bridge.

Project Description for the Proposed Marin Road Bridge

Marin Road is a single span concrete earth-filled closed arch structure, constructed over Fairfax Creek presumably circa 1930. The bridge is on a residential street leading to Sir Francis Drake Boulevard, a major arterial through the town of Fairfax. The structure is approximately 41 feet long and a little over 26 feet wide. It supports two lanes of traffic nearly 10 feet above the creek bed. There are no as-built plans available from the original design of the bridge, though a new General Plan (GP) from field measurements has been developed for the bridge. There are no sidewalks on the bridge but a separate steel pedestrian/bicycle bridge exists for non-motorized travelers immediately upstream of this bridge. (The latter bridge is not in the program.)

Marin Road Bridge is not eligible for National Register of Historic Places (NRHP) listing. It has a Sufficiency Rating (SR) of 60.0, but is flagged as neither Structurally Deficient (SD) nor Functionally Obsolete (FO) in the latest (2016) Caltrans Bridge Inspection Report (BIR).

The Marin Road Bridge Biological Study Area (BSA) is shown in Figure 1. The plans are provided in Figure 2. The BPMP repairs for Marin Road Bridge and the method of construction would consist of:

- <u>Repair of the toppling bridge wingwall</u>. The leaning, rotating and separated concrete wingwall on the southeast side (downstream of the bridge) would be repaired in-situ. The wingwall is approximately 10 feet long and eight feet high. It would be reconnected to the existing bridge with steel dowels and rebar tied to its reinforcement, exposed by removing a strip of the wingwall concrete next to the bridge. The wingwall would be surfaced with a fresh layer of lightly-reinforced air-blown concrete (shotcrete), and stabilized with at least a couple of soil nails pinning it to the soil. Soil nails are steel tension elements placed in holes drilled through the concrete wingwall and the soil behind it for a distance of approximately 15'-20', inclined at an angle of 15 degrees. The ends of these tension elements are buried in a bulb of grout pumped into the end of the drilled hole, called bond zone, allowing the bond zone to mobilize the soil through friction. The other end of the tension elements would protrude out of the wingwall surface and be buried in the wingwall concrete overlay, anchored with special hardware and tensioned slightly to take the slack out of the line, creating a fastening system that would disallow the future movements of the wingwall.
- <u>Repair of the tattered rock slope protection (RSP) around the above wingwall</u>. The light rocks making up the scattered riprap would be collected and a course of rock riprap would be sized suitable for the top anticipated creek flow velocity. The soil volume below the bottom of the wingwall would be excavated along the front for a width and depth of two feet each to create a trench to place the rock in as a buttress against future scour. On the free edge of the wingwall not connecting with the bridge headwall a similar type of excavation would take place to place rock and connect to the RSP buttressing at the foot of the wall, in essence, surrounding the two exposed edges of the wingwall with rock riprap. Excavation at the edge of the wingwall for the RSP would be done manually and

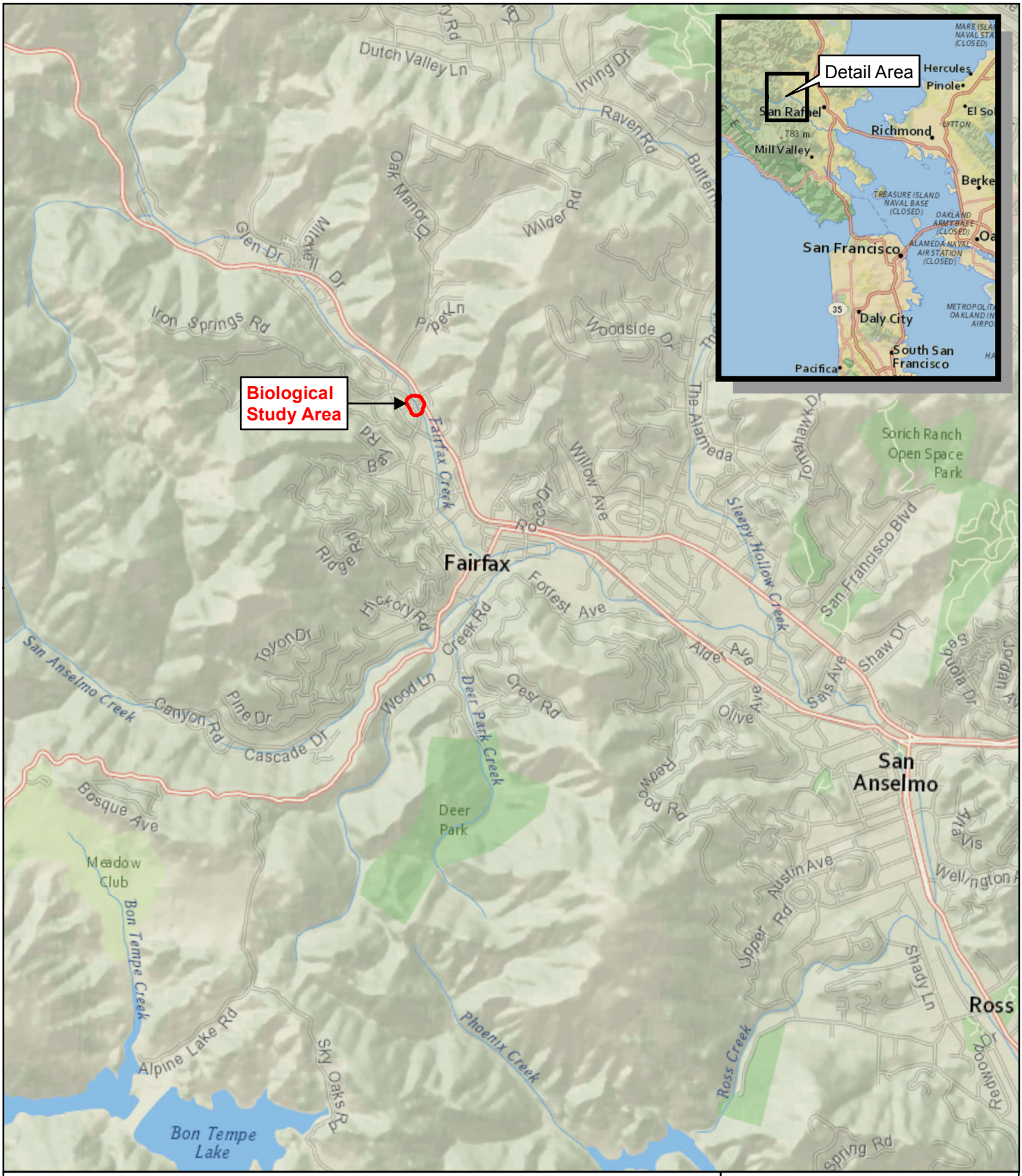

Figure 1. Biological Study Area Location Map

N
W E
S

Bridge Preventative Maintenance Program
Marin Road Bridge NES
Marin County, California

0 2,000 4,000
Feet

wra
ENVIRONMENTAL CONSULTANTS

Map Prepared Date: 3/29/2016
Map Prepared By: dchan
Base Source: Esri Streaming - NAIP 2014
Data Source(s): WRA

Path: L:\Acad 2000 Files\22000\22304\GIS\ArcMap\BPMP\Marin Road Bridge\Fig1_Marin_LocMap_20160329.mxd

This page intentionally left blank

Figure 2. Proposed Marin Road Bridge General Plan

DIST	COUNTY	ROUTE	POST MILES TOTAL PROJECT	SHEET NO.	TOTAL SHEETS
04	Mrn				XX

REGISTERED CIVIL ENGINEER

PLANS APPROVAL DATE

REGISTERED PROFESSIONAL ENGINEER — NADER TAMANNAIE — NO. 37289 — EXP. 6/30/16 — CIVIL — STATE OF CALIFORNIA

930 ALHAMBRA BLVD. SUITE 220
SACRAMENTO, CA 95816

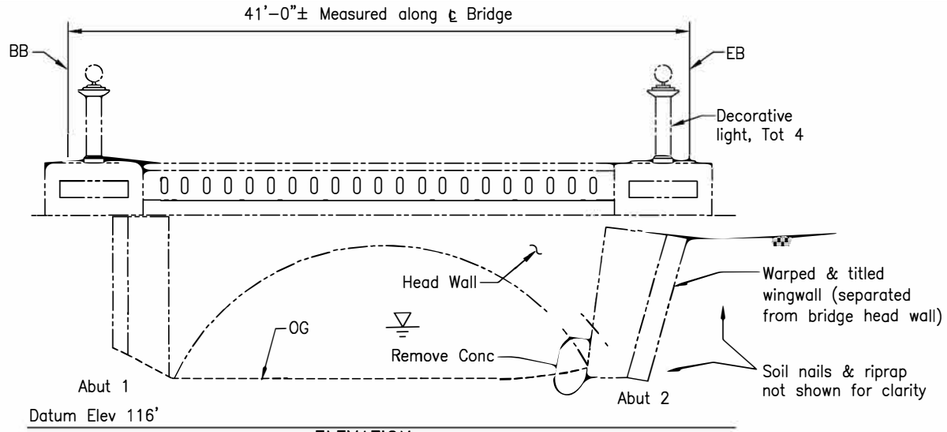

ELEVATION
1" = 5'

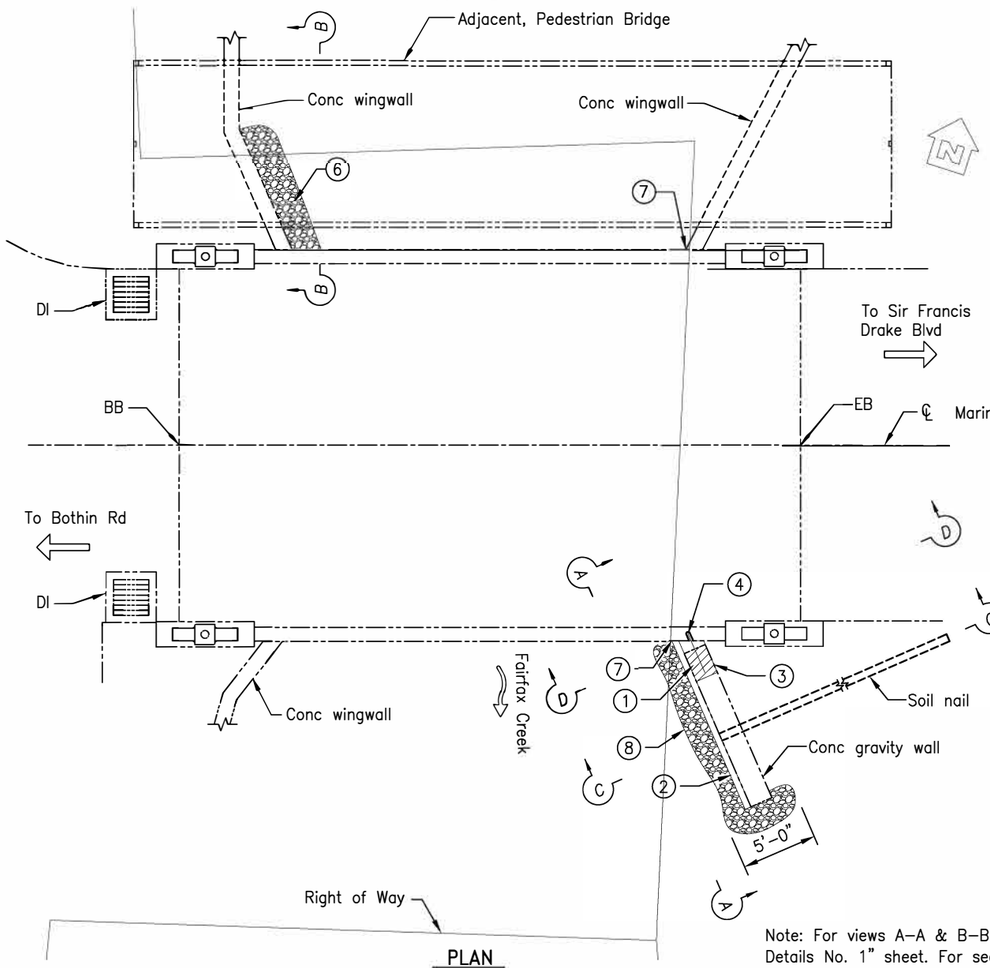

PLAN
1" = 5'

Note: For views A–A & B–B see "Repair Details No. 1" sheet. For sections C–C & D–D see "Repair Details No.2 "sheet"

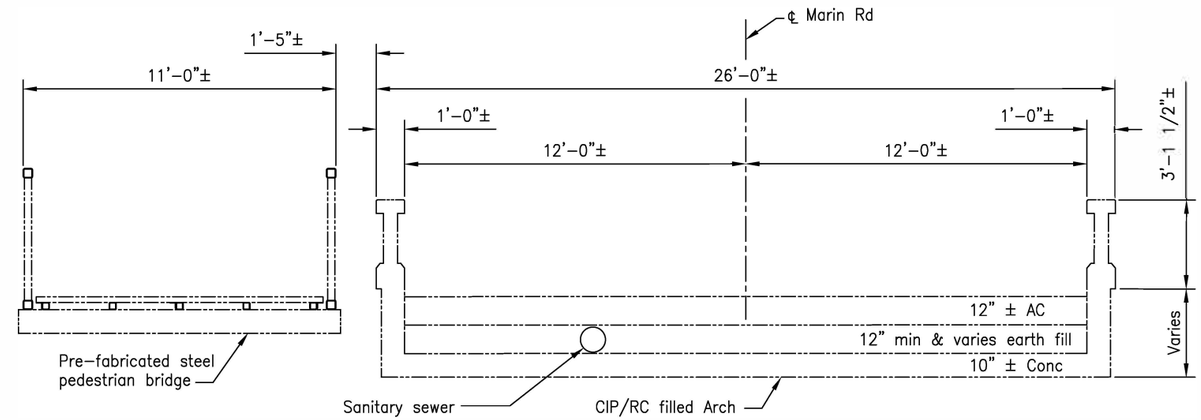

TYPICAL SECTION
3/16" = 1'–0"

NOTES:

1. Remove debris and portion of exist conc wingwall to construct new wall (shown hatched)
2. 5"air–blown conc surface
3. New Conc wall addition. Attach to head wall
4. Drill & bond dowels
5. Crack in exist wingwall, fill with grout
6. Rock riprap, 2'–0" Min below OG. Repair crack in Wingwall
7. Repair and patch spall at abutment, Typ at bottom corners of north and abutment 2
8. Rock riprap, extend 2'–0" min below OG

LEGEND

- Indicates existing structure
- Indicates direction of travel
- Indicates direction of flow
- Indicates Conc removal

NOTE:

Bridge As–built drawing shown is approximate re–creation of existing configurations. The contractor shall verify all controlling field dimensions before ordering or fabricating any material.

DESIGN OVERSIGHT	DESIGN	BY N. Tamannaie	CHECKED	LOAD & RESISTANCE FACTOR DESIGN	LIVE LOADING: HL93 AND PERMIT DESIGN VEHICLE	
SIGNOFF DATE	DETAILS	BY J. Caravalho	CHECKED	LAYOUT	BY N. Tamannaie	CHECKED
	QUANTITIES	BY	CHECKED	SPECIFICATIONS	BY	PLANS AND SPECS COMPARED

PREPARED FOR THE TOWN OF FAIRFAX DEPARTMENT OF PUBLIC WORKS

Nader Tamannaie, PE
PROJECT ENGINEER

BRIDGE No. 27C–0144
POST MILE ––

MARIN ROAD BRIDGE (BPMP)

GENERAL PLAN

DS OSD 2138 (CADD 4/89)

ORIGINAL SCALE IN INCHES FOR REDUCED PLANS 0 1 2 3

CU
EA
CONTRACT NO.

DISREGARD PRINTS BEARING EARLIER REVISION DATES

REVISION DATES (PRELIMINARY STAGE ONLY)

SHEET 5 OF

This page intentionally left blank

with small power equipment. The surface of the rock riprap would be flush with concrete wingwall, the creek bed and the embankment in order not to protrude into the waterway and impact the flows or flow capacity. The trenches housing the RSP would be lined up with special geotextile fabric to prevent the migration of the finely grained soil particles and erosion of the soil around the rock.

- Repair of the structural damage to another wingwall. This second wingwall is on northwest side (upstream of the bridge) and vertical. It comes into the bridge headwall at an angle and is undermined, cracked horizontally near the bottom for five-six feet and dropped five to six inches below the crack due to gravity. The repair work would consist of cleaning the damaged and cracked concrete, patching the crack with special grout to prevent the further deterioration of this bridge structural element and burying some rock below the creek bed surface and in front of the wingwall to arrest its further undermining. Again, the surface of the rock riprap would be flush with the creek bed in order not to protrude into the waterway and impact the flows or flow capacity. Geotextile lining would be placed around the rock riprap here as well.
- Repair of structural concrete spalls in the soffit of the structure. This is a manual operation on a handful of such structurally damaged spots in the concrete. After cleaning the rust from the steel rebars and removing the unsound concrete within the spall, a special agent, such as epoxy grout, would be applied and made flush with the concrete surfaces to protect the reinforcement and patch the concrete.

An Area of Potential Effects (APE) drawing and a preliminary Bridge General Plan for the repairs have been developed for this bridge work. The work will be at both the deck and below deck levels and is expected to take as many as ten working days from start to finish. The bridge will remain entirely open to motorized and non-motorized traffic. A flag person directing traffic at times may be necessary but traffic queuing is not expected.

Chapter 2 – Study Methods

The Town's consultants, Kelly Biological Consulting's plant ecologist Micki Kelly, PWS and WRA's fish and wildlife biologists Dan Chase and Nick Brinton conducted biological resources studies in the Spring/Summer of 2015, 2016 and Spring 2017. The studies included a biological resources assessment, special-status plant surveys, and a delineation of Section 404 jurisdictional areas within the proposed Marin Road Bridge BPMP Project Biological Study Area (BSA) in the Town of Fairfax, Marin County, California. The BSA was examined on foot to determine (1) vegetation communities present, (2) if existing conditions provide suitable habitat for any special-status plant or wildlife species that have a potential to occur within the vicinity of the BSA, and (3) the presence of potential jurisdictional wetlands and "other waters" within the BSA. The BSA and impact areas are shown in Figures 3a and 3b. The special-status species that are known to occur in the vicinity of the Biological Study Area are listed in Table 1 and mapped in Figures 4 and 5. The regulatory framework under which the assessment was conducted and the methods used to conduct the assessment are described in the following section.

Regulatory Requirements

National Environmental Policy Act

The National Environmental Policy Act (NEPA) of 1969 provides a framework which federal agencies must follow in evaluating environmental impacts of their actions.

Actions by federal agencies must “use all practicable means and measures” to avoid or lessen impacts to the environment. In 2007, formal guidance for the continuation of a pilot program was issued which allows Caltrans to assume all of the Federal Highway Administration (FHWA) environmental responsibilities under NEPA and other environmental laws (NEPA Delegation). This delegation authority is limited to highway projects, including Local Assistance Federal Aid projects, and specific projects within the State or a programmatic delegation. Therefore, Caltrans must ensure joint projects with FHWA or projects funded with Federal Aid are in compliance with NEPA.

WETLAND AND WATERS

Section 10 of Rivers and Harbors Act of 1899

The Rivers and Harbors Act requires permits in navigable waters of the U.S. for all structures such as riprap and activities such as dredging. The term navigable waters of the United States and all other terms relating to the geographic scope of jurisdiction are defined at 33 CFR part 329. Generally, they are those waters of the United States that are subject to the ebb and flow of the tide shoreward to the mean high water mark, and/or are presently used, or have been used in the past, or may be susceptible to use to transport interstate or foreign commerce. The United States Army Corps of Engineers (USACE) grants or denies permits based on the effects on navigation. Fairfax Creek is a tributary to Corte Madera Creek, which is only considered navigable below the College of Marin, approximately 4 miles downstream of the site (http://www.spn.usace.army.mil). Therefore, this creek is not considered a navigable water subject to the Rivers and Harbors Act.

Clean Water Act (CWA)

The CWA provides guidance for the restoration and maintenance of the chemical, physical, and biological integrity of the nation's waters. Section 404 identifies the United States Army Corps of Engineers (USACE) jurisdiction over fill materials in essentially all water bodies, including wetlands. All federal agencies are required to avoid impacts to wetlands whenever there is a practicable alternative. Section 404 established a permit program administered by USACE regulating the discharge of dredged or fill material into Waters of the US (including wetlands).

Section 401of the CWA requires that an applicant for a federal license or permit, which allows a discharge to Waters of the U.S., obtain a state certification that the discharge complies with other provisions of CWA. The Regional Water Quality Boards (RWQCB) administer the certification program in California. The guidelines allow the discharge of dredged or fill material into the aquatic system only if there is no practicable alternative that would have less adverse impacts.

Executive Order 11990 – Protection of Wetlands

This order established a national policy to avoid adverse impacts to wetlands whenever there is a practicable alternative. The U. S. Department of Transportation (DOT) promulgated DOT Order 5660.1A in 1978 to comply with this direction. On federally funded projects, impacts to wetlands must be identified. Alternatives that avoid wetlands must be considered. If wetland impacts cannot be avoided, then all practicable measures to minimize harm must be included. This must be documented in a specific Wetlands Only Practicable Alternative Finding. An additional requirement is to provide early public involvement in projects affecting wetlands. FHWA provides technical

assistance (Technical Advisory 6640.8A) and reviews environmental documents for compliance.

California Porter-Cologne Water Quality Control Act

This regulatory law is becoming more prominent on projects involving impacts to isolated Waters of the State (non-404/401 waters). The RWQCB is increasingly requiring Waste Discharge Requirement (WDR) permits for impacts to Waters of the State.

Streams, Lakes, and Riparian Habitat in California

Streams and lakes, as habitat for fish and wildlife species, are subject to the jurisdiction of California Department of Fish and Wildlife (CDFW) under Sections 1600-1616 of California Fish and Game Code. Alterations to, or work within or adjacent to streambeds or lakes, generally require a 1600 series Lake and Streambed Alteration Agreement. The term “stream”, which includes creeks and rivers, is defined in the California Code of Regulations (CCR) as “a body of water that flows at least periodically or intermittently through a bed or channel having banks and supports fish or other aquatic life [including] watercourses having a surface or subsurface flow that supports or has supported riparian vegetation” (14 CCR 1.72). In addition, the term “stream” can include ephemeral streams, dry washes, watercourses with subsurface flows, canals, aqueducts, irrigation ditches, and other means of water conveyance if they support aquatic life, riparian vegetation, or stream-dependent terrestrial wildlife (CDFG 1994). “Riparian” is defined as “on, or pertaining to, the banks of a stream.” Riparian vegetation is defined as “vegetation which occurs in and/or adjacent to a stream and is dependent on, and occurs because of, the stream itself” (CDFG 1994). Removal of riparian vegetation can also require a Lake and Streambed Alteration Agreement from CDFW.

INVASIVE SPECIES

Executive Order 13112 – Invasive Species

On February 3, 1999, President William J. Clinton signed Executive Order 13112 requiring federal agencies to combat the introduction or spread of invasive species in the United States. The order defines invasive species as “any species, including its seeds, eggs, spores, or other biological material capable of propagating that species, that is not native to that ecosystem whose introduction does or is likely to cause economic or environmental harm or harm to human health." Federal Highway Administration (FHWA) guidance issued August 10, 1999 directs the use of the State’s invasive species list, maintained by the California Invasive Species Council (Cal-IPC 2017) to define the invasive plants that must be considered as part of the National Environmental Policy Act (NEPA) analysis for a proposed project. Under the EO, federal agencies cannot authorize, fund, or carry out actions that it believes are likely to cause or promote the introduction or spread of invasive species in the United States or elsewhere unless all reasonable measures to minimize risk of harm have been analyzed and considered.

PROTECTED SPECIES

Special-Status Species

Special-status species include those plants and wildlife species that have been formally listed, are proposed as endangered or threatened, or are candidates for such listing under the federal Endangered Species Act or California Endangered Species Act.

These acts afford protection to both listed and proposed species. In addition, California Department of Fish and Wildlife Species of Special Concern, which are species that face extirpation in California if current population and habitat trends continue, U.S. Fish and Wildlife Service (USFWS) Birds of Conservation Concern, and CDFW special-status invertebrates are all considered special-status species. Although CDFW Species of Special Concern generally have no special legal status, they are given special consideration under the California Environmental Quality Act (CEQA). Plant species on the California Native Plant Society (CNPS) Rare and Endangered Plant Inventory with California Rare Plant Rank of 1 or 2 are also considered special-status plant species and must be considered under CEQA. Rank 3 and Rank 4 species are afforded little or no protection under CEQA.

Federal Endangered Species Act

The Endangered Species Act (ESA) of 1973, as amended (16 USC 1531 et seq.), was enacted to provide a means to identify and protect endangered and threatened species. Under Section 9 of the ESA, it is unlawful to take any listed species. "Take" is defined as harassing, harming, pursuing, hunting, shooting, wounding, killing, trapping, capturing, or collecting a listed species. "Harass" is defined as an intentional or negligent act or omission, which creates the likelihood of injury to wildlife by annoying it to such an extent as to significantly disrupt normal behavioral patterns, which include, but are not limited to, breeding, feeding, or sheltering. "Harm" is defined as an act which actually kills or injures fish or wildlife and may include significant habitat modification or degradation which actually kills or injures fish or wildlife by significantly impairing essential behavioral patterns, including breeding, spawning, rearing, migrating, feeding, or sheltering. Actions that may result in "take" of a federal-listed species are subject to USFWS or National Marine Fisheries Service (NMFS) permit issuance and monitoring. Section 7 of ESA requires federal agencies to ensure that any action authorized, funded, or carried out by the agency is not likely to jeopardize the continued existence of any endangered or threatened species or result in the destruction or adverse modification of designated critical habitat for such species. Any action authorized, funded, or carried out by a federal agency or designated proxy (e.g., Caltrans) which has potential to affect listed species requires consultation with the USFWS or the NMFS under Section 7 of the ESA.

Essential Fish Habitat

The Magnuson-Stevens Fishery Conservation and Management Act of 1976 was established to conserve and manage fishery resources found off the coast, as well as anadromous species and Continental Shelf fishery resources of the United States, by exercising (A) sovereign rights for the purposes of exploring, exploiting, conserving, and managing all fish within the exclusive economic zone established by Presidential Proclamation 5030, dated March 10, 1983, and (B) exclusive fishery management authority beyond the exclusive economic zone over such anadromous species, Continental Shelf fishery resources, and fishery resources in special areas.

California Endangered Species Act

CDFW is responsible for administering California Endangered Species Act (CESA, CDFG Code §§2050, et seq.), which prohibits take of species that have been listed, or are considered for listing (candidate species) as threatened or endangered species within the State of California. CESA allows for incidental take of state listed species through issuance of an Incidental Take Permit, or through a Consistency Determination in coordination with a Biological Opinion issued by the USFWS (CDFW Code Section

2081). In contrast with federal law, the definition of “take” under CESA involves actual harm to one or more members of a listed species and does not extend to modification of habitat not involving direct take.

Migratory Bird Treaty Act

This treaty with Canada, Mexico and Japan makes it unlawful at any time, by any means or in any manner, to pursue, hunt, take, capture, or kill migratory birds. The law applies to the removal of nests (such as swallow nests on bridges) occupied by migratory birds during the breeding season. California Fish and Game Code (Sec 3500) also prohibits the destruction of any nest, egg, or nestling.

Other Sensitive Biological Communities

Other sensitive biological communities not discussed above include habitats that fulfill special functions or have special values. Natural communities considered sensitive are those identified in local or regional plans, policies, regulations, or by the CDFW. CDFW ranks sensitive communities as "threatened" or "very threatened" and keeps records of their occurrences in its California Natural Diversity Database (CNDDB; CDFW 2017a). Sensitive plant communities are also identified by CDFW. CNDDB vegetation alliances are ranked 1 through 5 based on NatureServe's (2010) methodology, with those alliances ranked globally (G) or statewide (S) as 1 through 3 considered sensitive. Impacts to sensitive natural communities identified in local or regional plans, policies, or regulations or those identified by the CDFW or USFWS must be considered and evaluated under CEQA (CCR Title 14, Div. 6, Chap. 3, Appendix G). Specific habitats may also be identified as sensitive in city or county general plans or ordinances.

LOCAL POLICIES AND ORDINANCES

Tree Protection Ordinance

In 1973, the Town of Fairfax approved Ordinance No. 387 for trees. The purpose of the ordinance is to preserve the wide variety of local native trees and to protect the benefits they provide the citizens. Chapter 8.36.020 of the Town Code defines "altering" and "tree." A Tree Permit is required for removal or significant trimming of any tree, which has a circumference of 24 inches or more measured at 24 inches above the ground. In effect, this is a little less than an 8-inch diameter tree trunk.

Studies Required

The Town’s consultants, Kelly Biological Consulting and WRA conducted field studies in the entire BSA to determine the presence of wetlands and “other waters”, and to evaluate the presence or potential presence of special-status species and sensitive habitats. Methods used during the site visits to make determinations for this NES are described below.

Special-Status Species

Prior to the field site visits to the BSA, the following sources were reviewed to determine which special-status plant and wildlife species have been documented to occur in the vicinity of the BSA:

- California Natural Diversity Database (CNDDB) records for the Bolinas, Novato, Petaluma Point, Point Bonita, San Francisco North, San Geronimo, San Rafael, San Quentin U.S. Geological Service 7.5' Quadrangles (CDFW 2017a)
- USFWS Information for Planning and Conservation Species Lists (USFWS 2017)
- CNPS Inventory of Rare, Threatened, and Endangered Plants of California records for the Bolinas, Novato, Petaluma Point, Point Bonita, San Francisco North, San Geronimo, San Rafael, San Quentin U.S. Geological Service 7.5' Quadrangles (CNPS 2017)
- CDFW Spotted Owl Database (CDFW 2017b)
- CDFW California Wildlife Habitat Relationships Online Database (CDFW 2017c)
- CDFW Passage Assessment Database (CDFW 2017d)
- CDFG publication "California's Wildlife, Volumes I-III" (Zeiner et al. 1990)
- CDFW and University of California Press publication California Amphibian and Reptile Species of Special Concern (Thomson et al. 2016)
- A Field Guide to Western Reptiles and Amphibians (Stebbins 2003)
- CDFG publication "California Bird Species of Special Concern" (Shuford and Gardali 2008).
- University of California at Davis, Center for Watershed Sciences. Pisces: California Fish Data and Management Software (UC Davis 2017)
- NMFS Species List and Essential Fish Habitat Maps of California (NMFS 2017)
- The Marin County Breeding Bird Atlas (Shuford 1993)
- eBird online database (eBird 2017)
- Western Bat Working Group (WBWG) online species accounts (WBWG 2017)

Special-Status Species. During the March-May 2015, March-June 2016, and April 2017 site visits, the Town's consultant Kelly Biological Consulting completed floristic surveys for special-status plant species with flowering periods that overlapped with the timing of the visits. All habitats with potential to support special-status plant species were traversed on foot, and all plant species observed and identifiable were recorded. During this period WRA biologists completed a survey to determine the potential for the BSA to support special-status wildlife species. The studies did not constitute protocol level surveys. Habitat conditions observed in the BSA during the site visits were used to evaluate the potential for presence of special-status species based on literature and database searches and the professional expertise of the investigating biologists. Table 1 presents the evaluation of habitat potential for each special-status plant and wildlife species documented to occur in the vicinity of the BSA. A list of all plant and wildlife species observed during the site visit is provided in Appendix A. The USFWS and NFMS official listing of special-status species with a potential to occur in the proposed project vicinity is provided in Appendix B.

Section 404 "Waters of the U.S." During the site visit, the BSA was evaluated for the presence of indicators of wetlands and "other waters". Section 328.3 of the Federal Code of Regulations defines wetlands as:

> *"Those areas that are inundated or saturated by surface or ground water at a frequency and duration sufficient to support, and that under normal circumstances do support, a prevalence of vegetation typically adapted for life in*

saturated soil conditions. Wetlands generally include swamps, marshes, bogs, and similar areas." EPA, 40 CFR 230.3 and CE, 33 CFR 328.3 (b)

The methods used to delineate potential jurisdictional wetlands and waters are based on the *U.S. Army Corps of Engineers Wetlands Delineation Manual* ("Corps Manual"; Environmental Laboratory 1987) and the *Regional Supplement to the Corps of Engineers Wetland Delineation Manual: Arid West Region (Version 2.0)* ("Arid West Supplement"; USACE 2008). The routine method for wetland delineation described in the Corps Manual was used to identify areas potentially subject to USACE Section 404 jurisdiction within the BSA.

The BSA was evaluated for the presence or absence of indicators of the three wetland parameters described in the Corps Manual and Arid West Supplement. The three parameters are the presence of: (1) hydrophytic vegetation, (2) wetland hydrology, and (3) hydric soils. According to the Corps Manual, for areas not considered "problem areas" or "atypical situations":

> *"... [E]vidence of a minimum of one positive wetland indicator from each parameter (hydrology, soil, and vegetation) must be found in order to make a positive wetland determination."*

This study also evaluated the presence of unvegetated "other waters" potentially subject to USACE jurisdiction under Section 404 of the Clean Water Act. Besides wetlands, other areas subject to Corps jurisdiction include lakes, rivers and streams in addition to all areas below the high tide line (HTL) in areas subject to tidal influence. No tidally influenced areas are present in the BSA. Jurisdiction in non-tidal areas extends to the ordinary high water (OHW) mark defined as:

> "*...that line on the shore established by the fluctuations of water and indicated by physical characteristics such as clear, natural line impresses on the bank, shelving, changes in the characteristics of the soil, destruction of terrestrial vegetation, the presence of litter and debris, or other appropriate means that consider the characteristics of the surrounding areas.*" Federal Register Vol. 51, No. 219, Part 328.3 (e). November 13, 1986.

Identification of the ordinary high water mark at this site followed the USACE Regulatory Guidance Letter No. 05-05, *Ordinary High Water Mark Identification* (USACE 2005), which provides a list of indicators, such as shelving, natural lines impressed on the bank, wrack lines, scour, and sediment deposition. These indicators were used to map the location of the ordinary high water mark for "other waters" in the BSA.

Vegetation Communities and Sensitive Habitats. Vegetation communities present in the BSA were classified based on plant community descriptions described in *A Manual of California Vegetation, 2nd Edition* (Sawyer, J., T. Keeler-Wolf and J. Evens. 2009). However, in some cases it was necessary to identify variants of community types or to describe non-vegetated areas that are not described in the literature.

Biological communities were classified as sensitive or non-sensitive as defined by CEQA. Sensitive plant communities include habitats that fulfill special functions or have special values. Natural communities considered sensitive are those identified in local or regional plans, policies, regulations, or by CDFW. CDFW ranks sensitive communities as 'threatened' or 'very threatened' and keeps records of their occurrences in its CNDDB. Also, vegetation alliances are ranked 1 through 5 (Sawyer, J., T. Keeler-Wolf and J. Evens. 2009). Alliances ranked globally (G) or statewide (S) as 1 through 3 are

considered sensitive. Impacts to sensitive natural communities identified in local or regional plans, policies, regulations, or by CDFW or USFWS must be considered and evaluated under CEQA.

Personnel and Survey Dates

The Town's consultant, Micki Kelly, Certified Professional Wetland Scientist and plant ecologist with 25 years of experience, conducted a wetland delineation on April 12, 2016 and special-status plant surveys on March 16, 2015 as well as April 12 and June 23, 2016 and April 11, 2017. WRA biologists Rob Schell (wildlife biologist) and Daniel Chase (fisheries biologist) conducted the biological resource site visits on November 17, 2014. Nicholas Brinton (fisheries biologist) conducted a follow-up site visit on March 15, 2016. Their qualifications are provided in Appendix C.

Agency Coordination and Professional Contacts

In a May 18, 2016 informal Marin Project Coordination interagency meeting, Ms. Kelly briefly introduced the concept of the Fairfax BPMP bridge project prior to finalize design plans. The CDFW and RWQCB indicated that depending on the level of impact, compensatory mitigation may be necessary. No other agency coordination has been done.

Limitations That May Influence Results

The region was in a multi-year drought, making conditions drier than normal during the 2014-15 work. The wet season 2015-6 rainfall totals were slightly above normal and wet season 2016/2017 are very high (http://www.marinwater.org/300/Water-Watch). The site visits were conducted during daylight hours and consisted of an assessment of likely habitats for special-status plants and wildlife; they did not conform to specific USFWS or NMFS protocols for any species. No detailed fish studies were completed to identify and enumerate fish species present. Data and documents from previous studies in the area were relied upon to evaluate potential presence of fish species.

Chapter 3 – Results: Environmental Setting

This section describes the region in which the proposed project will occur. It is intended to explain context and the level of intensity of impacts. It includes a brief description of the area's topography, soils, habitat, watercourses, and level of human or natural disturbance.

Existing Biological and Physical Conditions

BIOLOGICAL STUDY AREA

The BSA is located on and around the Marin Road Bridge over Fairfax Creek, in the Town of Fairfax, Marin County, California. Marin Road is a local residential road. The BSA covers the areas where the proposed project-related direct or indirect actions such as ground-disturbing, construction, staging, or access activities would occur and goes beyond that to ensure that key biological issues are addressed. Marin Road is a local road in a suburban developed area. The adjacent land use is residential (single family homes). The BSA extends up and downstream from the bridge along the stream corridor covering the primary natural area.

Site elevations range from approximately 100 to 200 feet NAVD88. Surrounding land use is primarily residential. The bridge is located on the San Rafael USGS 7.5-minute quadrangle map at latitude W37.993453, longitude N122.594695.

PHYSICAL CONDITIONS

Topography

Within the BSA the creek has been channelized. The banks are roughly 10 to 20 vertical feet (top of bank to channel) near the bridge. Adjacent to the top of bank, lands are relatively flat.

Hydrology

Fairfax Creek is a blueline stream that is perennial at this location. The principal natural hydrological sources for the BSA are creek flows, direct precipitation, and surface run-off from adjacent lands. Fairfax Creek flows though the BSA towards the south-southeast. In roughly 0.75 miles, it joins San Anselmo Creek, which turns east, eventually flowing into Corte Madera Creek, then San Francisco Bay, and the Pacific Ocean.

Soils

The soils that occur in the BSA are Xerorthents-Urban land complex (0 to 9 percent slopes) (USDA NRCS 2017). Because Xerorthents-Urban land complex is a composite of many soil types soil taxonomy, and drainage class information is not available.

The lower part of the northwest bank is a vertical concrete wall with a concrete footing, above that, is a narrow band of natural substrate. The other banks near the bridge are generally natural substrate. The northeast and southwest bank appear to be depositional areas. Downstream of the bridge, outside the work area, several homes have retaining walls that abut the creek.

BIOLOGICAL CONDITIONS IN THE BSA

Ruderal Disturbed/Developed

The majority of the BSA is Ruderal Disturbed/Developed habitat and includes pavement (Marin Road and driveways), gravel and dirt roadsides, structures (homes and outbuildings), backyards, and landscaping or bare areas. In the areas that are not landscaped, the vegetation is predominately non-native species commonly found in the region, such as English ivy (*Hedera helix*), big leaf periwinkle (*Vinca major*), and non-native grasses and forbs.

Riparian Woodland

An open canopy riparian woodland loosely similar to Box-Elder Forest (*Acer Negundo* Forest Alliance) (G5, S2.2) (Sawyer, Keeler-Wolf, and Evans 2009) follows a narrow route through the BSA (Figure 3a). The Box-Elder Forest's G5, S2.2 ranking indicates that it is a natural community of special concern (sensitive) at the state level, though more common in other regions. Within this habitat in the BSA, the overstory species include box elder and white alder (*Alnus rhombifolia*). Dense box elder shrubs are have colonized the bank that is north of the bridge. The herbaceous/vine layer is comprised mainly of English ivy and Himalayan blackberry (*Rubus armeniacus*), and scattered grasses and forbs including panic veldtgrass (*Ehrharta erecta*) and miners lettuce (*Claytonia perfoliata*).

Perennial Stream ("Other Waters")

Fairfax Creek is a perennial creek. Flows vary with the rainfall patterns of a given season. It is supported by a local watershed, generally, the western part of the Town of Fairfax and adjacent open space lands. The creek substrate is a mix of small gravel to larger cobble and rock. Indicators of the OHW mark include the slope change at the bed and earthen bank junction and wrack at the edge of the creek bed. The channel width at the OHW mark was used to determine the stream ("other waters") boundary shown on Figure 3a. The creek is not included on the National System of Wild and Scenic Rivers published by the U.S. Department of the Interior. There are no wetlands in the BSA. The bridge has a concrete headwall and sidewalls, as well as wingwalls on the upstream and downstream banks. Just upstream of the bridge there is a concrete retaining wall along the base of the northwest bank.

Unvegetated Bank

Under the bridge there is a small area above OHW mark, on the northeastern part of the bank that is unvegetated. This area is comprised of exposed bedrock, cobble, and dirt.

Wildlife Species in the BSA

The BSA is situated within riparian and suburban habitat, and wildlife species known to occur in the vicinity include California scrub jay (*Aphelocoma californica*), acorn woodpecker (*Melanerpes formicivorus*), green heron (*Butorides virescens*), American crow (*Corvus brachyrhynchos*), and fox squirrel (*Sciurus niger*). The BSA is located upstream of a total fish passage barrier at Bolinas Avenue. Fairfax Creek is not considered anadromous, but does support non-anadromous native fish species.

wra
ENVIRONMENTAL CONSULTANTS

Bridge Preventative Maintenance Program

Town of Fairfax, California

Figure 3a.

Marin Road Bridge Biological Communities

- Biological Study Area - 2.14 ac.
- Perennial stream (0.12 ac.)
- Riparian Woodland (0.26 ac.)
- Ruderal disturbed/Developed (1.75 ac.)
- Unvegetated bank (<0.01 ac.)

N W E S

0 20 40 80
Feet

Map Date: March 2016
Map By: smortensen
Base Source: Esri Stream - Marin County 2014

Path: L:\Acad 2000 Files\22000\22304\GIS\ArcMap\BPMP\Marin Road Bridge\2017\Fig3a_Marin_BioComms_20170622.mxd

This page intentionally left blank

INVASIVE SPECIES

Federal Highway Administration guidance issued August 10, 1999, states that the State's invasive species list, maintained by the California Invasive Species Council be used to define the invasive plants. The California Invasive Plant Council (Cal-IPC) Inventory and CDFA maintain lists of invasive plant species. Cal-IPC list categorizes plants as High, Moderate, or Limited, reflecting the level of each species' negative ecological impact in California. Cal-IPC defines High as "species that have severe ecological impacts on physical processes, plant and animal communities, and vegetation structure. Their reproductive biology and other attributes are conducive to moderate to high rates of dispersal and establishment. Most are widely distributed ecologically." (Cal-IPC 2017). The species found in the BSA that are listed on the Cal-IPC list as High are fennel (*Foeniculum vulgare*), English ivy, French broom (*Genista monspessulana*), Himalayan blackberry, and hedgehog dogtail (*Cynosurus echinatus)*. Several species with moderate rating were also observed, big-leaf periwinkle, Italian thistle (*Carduus pycnocephalu*s), slender wild oat (*Avena barbata*), panic grass (*Ehrharta erecta*), Bermuda buttercup (*Oxalis pes-carpe*), and sheep sorrel (*Rumex acetosella*).

During construction the several fennel, French broom and Italian thistle individuals within the BSA and in or adjacent to the work area will be removed. The English ivy, Himalayan blackberry, and big-leaf periwinkle, hedgehog dogtail, slender wild oat, panic grass, Bermuda buttercup, and sheep sorrel will be more difficult to eradicate, given that they are common outside the BSA in nearby areas and upstream. The proposed project will remove individuals of those species in areas where the vegetation is removed for construction activities, and stabilize the soil with appropriate erosion control measures, as needed.

New Zealand mud snail (NZMS; *Potamopyrgus antipodarum*) are documented within Fairfax Creek. Construction equipment such as pumps, tanks, or heavy equipment which operates within an infested aquatic environment is at risk for spreading NZMS. Snails survive in pooled water in pumps and tanks or in mud which remains attached to equipment. To prevent the spread of NZMS, all construction equipment that comes into contact with a wetted channel will be thoroughly cleaned to remove all attached soil and all water within the compartments will be dried up. Pumps and tanks will be cleaned and must remain fully dried for 72 hours following cleaning before equipment may be used on another aquatic project. In addition, any measures required by the agencies will be implemented.

Regional Species and Habitats and Natural Communities of Concern

The species listed in the CDFW (2017a), CNPS (2017), and USFWS (2017) records search results are discussed in Table 1. The official USFWS list can be found in Appendix B. Figures 4 and 5 show the documented occurrences for special-status plant and wildlife species (respectively) in the vicinity of the BSA based on the CNDDB (CDFW 2017a). A description of habitat requirements is provided for each special-status plant or wildlife species along with an evaluation of its potential to occur within the BSA. Potential for special-status species to occur in the BSA was determined according to the following criteria:

- Absent [A] - No habitat present and no further work needed.
- Habitat Present [HP] - Habitat is, or may be present. The species may be present.

- Present [P] - Species is present
- Critical Habitat [CH] - Proposed project footprint is located within a designated critical habitat unit, but does not necessarily mean that appropriate habitat is present.

Based on these results, it was determined that 69 special-status plant species and 95 special-status wildlife species have been documented from or have a range that occurs in the San Rafael, Bolinas, San Geronimo, Novato, Petaluma Point, San Quentin, San Francisco North, or Point Bonita 7.5-minute USGS quadrangles (Table 1). Of these species, 21 special-status plant species and nine special-status wildlife species have documented occurrences within 5 kilometers (3 miles) of the BSA (Figures 4 and 5; CDFW 2017a).

Due to a lack of appropriate habitat elements (such as coastal salt marsh) and the presence of residential development in the surrounding landscape, it was determined that the BSA has the potential to support only five of the special-status plant species identified in Table 1. No special-status plants were observed in the BSA during the site assessments conducted for this report.

Fairfax Creek within the BSA is listed as essential fish habitat (EFH) for Coho salmon (*Oncorhynchus kisutch*) and Chinook salmon (*O. tshawytscha*); however, neither species is considered present because the BSA is outside of both species current or known ranges (NMFS 2012, UC Davis 2017). Steelhead are prevented from entering Fairfax Creek because of a total barrier to anadromy located just upstream of the confluence with San Anselmo Creek. That barrier is discussed more extensively in Chapter 4.

The proposed project primarily involves short-term, temporary impacts and will not disrupt connectivity in the region. The creek channel will be restored to conditions similar to pre-project conditions which will allow for continued fish passage following the completion of work. Sensitive habitats within the BSA is limited to Fairfax Creek which is a perennial waterway and Riparian Woodland. Fairfax Creek is subject to USACE, RWQCB, and the CDFW jurisdiction.

Table 1: Listed, Proposed Species, and Critical Habitat Potentially Occurring or Known to Occur in the BSA.

Common Name	Scientific Name	Status	General Habitat Description	Habitat Present/ Absent	Rationale
Birds					
northern spotted owl	*Strix occidentalis caurina*	FT, ST, SSC	Old-growth forests or mixed stands of old-growth and mature trees. Occasionally in younger forests with patches of big trees. Prefers high, multistory canopy dominated by big trees, trees with cavities or broken tops, woody debris and space under canopy.	A	The BSA and immediate vicinity are residential development and riparian woodland which does not typically support the species or its preferred prey. This species has been recorded within 0.5 mile of the BSA; however, the observations are in areas of undeveloped and forested open space. The BSA is greater than 0.3 mile from the nearest potentially suitable nesting habitat and beyond disturbance buffers for this species.
short-eared owl	*Asio flammeus*	SSC	Found in swamp lands, both fresh and salt; lowland meadows; irrigated alfalfa fields. Tule patches/tall grass needed for nesting/daytime seclusion. Nests on dry ground in depression concealed in vegetation.	A	The BSA and immediate vicinity are residential development and riparian woodland which do not provide nesting habitat for the species. Lowland marshes, tule patches or tall grasslands that typically support nesting by the species do not occur in the BSA.
long-eared owl	*Asio otus*	SSC	Primarily a year-round resident. Inhabits riparian bottomlands to tall willows and cottonwoods; also, belts of live oak paralleling stream courses. Requires dense foliage cover within occupied tree stands, adjacent open land productive of mice for foraging, and the presence of old nests of other birds for nesting.	A	This species is a very rare breeder in Marin County. The only recorded occurrences of the species are near Bolinas and Drake's Bay, both locations are greater than 5 miles from the BSA (Shuford 1993). The BSA and vicinity is residential development with constant levels of anthropogenic disturbance which make the area unsuitable for nesting by the species.

Common Name	Scientific Name	Status	General Habitat Description	Habitat Present/ Absent	Rationale
burrowing owl	*Athene cunicularia*	SSC, BCC	Open, dry annual or perennial grasslands, deserts, and scrublands characterized by low-growing vegetation. Subterranean nester, dependent upon burrowing mammals, most notably, the California ground squirrel	A	The BSA and immediate vicinity are residential development and riparian woodland which do not provide habitat for the species. The BSA does not contain short grasslands or open areas containing burrows that could provide nesting or wintering habitat for this species.
golden eagle	*Aquila chrysaetos*	EPA, CFP, BCC	Resident in rolling foothills, mountain areas, sage-juniper flats, and desert. Cliff-walled canyons provide nesting habitat in most parts of range; also nests in large trees in open areas.	A	The BSA and immediate vicinity are residential development and riparian woodland which do not provide suitable nesting habitat for the species. The BSA also does not support habitat for typical prey species of golden eagle.
bald eagle	*Haliaeetus leucocephalus*	FD, SE, EPA, CFP, BCC	Primarily a winter visitor in the region; small numbers are present year-round and breed. Favors areas near larger bodies of water with abundant fish: lakes and reservoirs, rivers, and the ocean. Nests in large, old-growth, or dominant live tree with open branchwork. Often roosts communally in winter.	A	Although the BSA is within this species' historic breeding range, bald eagles are no longer known to breed in Marin County (Shuford 1993). The BSA and the vicinity do not provide larger open bodies of water to support foraging or nesting.
northern harrier	*Circus cyaneus*	SSC	(Nesting) Nests and forages in grassland habitats, usually in association with coastal salt and freshwater marshes. Nests on ground in shrubby vegetation, usually at marsh edge; nest built of a large mound of sticks in wet areas.	A	The BSA and immediate vicinity are residential development and riparian woodland which do not provide nesting habitat for the species. Suitable mesic grasslands or marsh habitat are absent from the BSA and the immediate surrounding areas.

Common Name	Scientific Name	Status	General Habitat Description	Habitat Present/ Absent	Rationale
white-tailed kite	*Elanus leucurus*	CFP	(Nesting) Year-long resident of open grasslands and agricultural areas. Preys on small diurnal mammals and occasional birds, insects, reptiles, and amphibians. Nests in tree-tops.	A	The BSA and immediately surrounding area are low-density residential developments in a largely forested landscape and do not provide nesting habitat for the species. The BSA does not contain open areas such as agricultural fields, grasslands or marsh that are typically used by this species.
American peregrine falcon	*Falco peregrinus anatum*	FD, SD,CFP, BCC	Year-round resident and winter visitor in the region. Habitat variable, though usually associated with coasts, bays, marshes and other bodies of water. Nests on sheer, protected cliffs and also on manmade structures including buildings and bridges. Preys on birds, especially waterbirds. Forages widely.	A	High cliffs and tall buildings typically used for nesting by this species are absent from the BSA and immediate surrounding area. Large water-bodies which provide foraging habitat are absent from the BSA and vicinity.
prairie falcon	*Falco mexicanus*	BCC	Year-round resident in areas of California and winter visitor. Inhabits dry, open terrains, including foothills and valleys. Breeding sites located on steep cliffs. Forages widely.	A	Although this species winters in Marin County, it does not nest there (Shuford 1993). Additionally, the BSA does not contain xeric open areas such as grasslands that are typically used by this species. This species could occasionally be observed flying over the BSA during migration.
ferruginous hawk	*Buteo regalis*	BCC	Winter visitor to open habitats, including grasslands, sagebrush flats, scrub, and low foothills surrounding valleys. Preys on mammals. Does not breed in California.	A	Although this species winters in Marin County, it does not nest there (Shuford 1993). Additionally, the BSA does not contain xeric open areas such as grasslands that are typically used by this species. This species could occasionally be observed flying over the BSA during migration.

Common Name	Scientific Name	Status	General Habitat Description	Habitat Present/ Absent	Rationale
American white pelican	*Pelecanus erythrorhynchos*	SSC	Colonial nester on large interior lakes. Nests on large lakes, providing safe roosting and breeding places in the form of well-sequestered islets. Winter visitor to the San Francisco Bay Area.	A	American white pelican does not nest in Marin County (Shuford 1993). Additionally, suitable foraging habitat does not occur within 2 miles of the BSA.
California brown pelican	*Pelecanus occidentalis californicus*	FD, SD, CFP	Colonial nester on coastal islands just outside the surf line. Nests on coastal islands of small to moderate size which afford immunity from attack by ground-dwelling predators.	A	California brown pelican does not nest in Marin County (Shuford 1993). Additionally, suitable foraging habitat does not occur within 2 miles of the BSA.
marbled murrelet	*Brachyramphus marmoratus*	FT, SE	Feeds near shore; nests inland along the Pacific coast, from Eureka to Oregon border, and from Half Moon Bay to Santa Cruz. Nests in old-growth redwood-dominated forests, up to six miles inland. Nests often built in Douglas-fir or redwood stands containing platform-like branches.	A	This species is not known to nest within Marin County (Shuford 1993, McShane et al. 2004, USFWS 2009). In addition, no old growth redwood forest is present in the vicinity of the BSA to provide the isolation and platform like structure required for nesting by the species.
short-tailed albatross	*Phoebastria albatrus*	FE, SSC	Highly pelagic; comes to land only when breeding. Nests on remote Pacific islands. A rare non-breeding visitor to the eastern Pacific.	A	Short-tailed albatross does not nest in Marin County. Suitable marine foraging habitat does not occur within 5 miles of the BSA.
black oystercatcher	*Haematopus bachmani*	BCC	Resident on rocky shores of marine habitats along almost the entire California coast and adjacent islands. Breeds on undisturbed, rocky, open shores and cliffs.	A	The BSA is not within the known breeding distribution of this species. Rocky shoreline and marine habitats which support nesting and foraging by the species are absent from the BSA and immediate surrounds.

Common Name	Scientific Name	Status	General Habitat Description	Habitat Present/ Absent	Rationale
Caspian tern	*Hydroprogne caspia*	BCC	Nests in small colonies inland and along the coast on sandy estuarine shores, levees, and salt ponds. Found in inland fresh-water lakes and marshes; also, brackish or salt waters of estuaries and bays.	A	The BSA is not within the known breeding distribution of this species. Islands, shores, levees or salt ponds that support nesting by this species are absent. The BSA does not contain marine environments for foraging.
California least tern	*Sternula antillarum browni*	FE, SE, CFP	Colonial breeder on barren or sparsely vegetated, flat substrates near water. Breeding colonies in San Francisco Bay along estuarine shores and in abandoned salt ponds.	A	The BSA is not within the known breeding distribution of this species. Islands, shores, levees or salt ponds that support nesting by this species are absent. The BSA does not occur near marine environments to support foraging.
common loon	*Gavia immer*	SSC	Winter visitor; does not nest in the vicinity San Francisco Bay. Aquatic, generally found in large, deep water bodies with abundant fish.	A	Common loons do not nest in California. Furthermore, the BSA does not contain any open water habitat capable of supporting foraging by this species.
black skimmer	*Rynchops niger*	SSC, BCC	Found primarily in southern California; South San Francisco Bay has a small resident population. Nests colonially on gravel bars, low islets, and sandy beaches	A	The BSA is not within the known breeding distribution of this species. Islands, shores, levees or salt ponds that support nesting by this species are absent. The BSA does not occur near marine environments to support foraging.
western snowy plover	*Charadrius alexandrinus nivosus*	FT, SSC, BCC	Federal listing applies only to the Pacific coastal population. Found on sandy beaches, salt pond levees and shores of large alkali lakes. Requires sandy, gravelly or friable soils for nesting.	A	The BSA and immediate vicinity are residential development and riparian woodland which do not provide nesting habitat for the species. Sandy beaches, salt flats or alkali lake flats that this species inhabits are absent from the BSA and surrounding area.

Common Name	Scientific Name	Status	General Habitat Description	Habitat Present/ Absent	Rationale
California Ridgway's rail	*Rallus obsoletus obsoletus*	FE, SE, CFP	Resident in tidal marshes of the San Francisco Bay Estuary. Requires tidal sloughs and mud flats for foraging, and dense vegetation for nesting. Associated with abundant growth of cordgrass and pickleweed. Largest populations in south San Francisco Bay.	A	The BSA is not within the known breeding distribution of this species. The BSA lacks any salt marsh habitat which this species requires for nesting and foraging.
California black rail	*Laterallus jamaicensis coturniculus*	ST, CFP, BCC	Resident in marshes (saline to freshwater) with dense vegetation below four inches in height. Prefers larger, undisturbed marshes close to a major water source.	A	The BSA is not within the known breeding distribution of this species. The BSA lacks any marsh habitat that this species requires for nesting and foraging.
great egret	*Ardea alba*	None	(Rookeries tracked by CDFW) Colonial nester in large trees. Rookery sites located near marshes, tide-flats, irrigated pastures, and margins of rivers and lakes.	A	Suitable rookery trees are absent from the BSA and vicinity; however, this species may occasionally fly over or forage within the BSA.
snowy egret	*Egretta thula*	none	(Rookeries tracked by CDFW) Colonial nester, with nest sites situated in protected beds of dense tules. Rookery sites situated close to foraging areas: marshes, tidal-flats, streams, wet meadows, and borders of lakes.	A	Suitable rookery trees are absent from the BSA and vicinity; however, this species may occasionally fly over or forage within the BSA.

Common Name	Scientific Name	Status	General Habitat Description	Habitat Present/ Absent	Rationale
great blue heron	*Ardea herodias*	None	(Rookeries tracked by CDFW) Colonial nester in tall trees, cliffs, and sequestered spots on marshes. Rookery sites in close proximity to foraging areas: marshes, lake margins, tide-flats, rivers and streams, wet meadows.	A	Suitable rookery trees are absent from the BSA and vicinity; however, this species may occasionally fly over or forage within the BSA.
black-crowned night heron	*Nycticorax nycticorax*	none	(Rookeries tracked by CDFW) Colonial nester, usually in trees, occasionally in tule patches. Rookery sites located adjacent to foraging areas: lake margins, mud-bordered bays, marshy spots.	A	Suitable rookery trees are absent from the BSA and vicinity; however, this species may occasionally fly over or forage within the BSA.
double-crested cormorant	*Phalacrocorax auritus*	none	(Rookeries tracked by CDFW) Colonial nester on coastal cliffs, offshore islands, and along lake margins in the interior of the state. Nests along coast on sequestered islets, usually on ground with sloping surface, or in tall trees along lake margins.	A	Suitable rookery cliffs or other structures are absent from the BSA and vicinity; however, this species may occasionally fly over the BSA.
black swift	*Cypseloides niger*	SSC, BCC	Summer resident with a fragmented breeding distribution; most occupied areas in California either montane or coastal. Breeds in small colonies on cliffs behind or adjacent to waterfalls, in deep canyons, and sea-bluffs above surf. Forages aerially over wide areas.	A	Marin County is not within the documented breeding range of this species (Shuford 1993). Additionally, the BSA does not contain cliffs or deep canyons capable of providing nesting habitat for this species.

Common Name	Scientific Name	Status	General Habitat Description	Habitat Present/ Absent	Rationale
Vaux's swift	*Chaetura vauxi*	SSC	Summer resident, primarily in forested areas. Nests in tree cavities, favoring those with a large vertical extent. Also uses chimneys and other manmade substrates. Forages widely for aerial insects, often over or near rivers and lakes.	A	Trees surrounding the BSA are not adequate in size to provide suitable cavities that are required to support nesting by the species.
purple martin	*Progne subis*	SSC	Summer resident. In northwestern California, typically breeds in coniferous forest and woodlands. Nest in tree cavities, usually high off the ground, and in the cavities of manmade structures (e.g. bridges, utility poles). Forages for aerial insects.	HP	Although no large cavities were observed within the riparian woodland, the BSA may provide suitable nest-trees and foraging habitat to support this species.
bank swallow	*Riparia riparia*	ST	Migrant in riparian and other lowland habitats in western California. Colonial nester in riparian areas with vertical cliffs and bands with fine-textured or fine-textured sandy soils near streams, rivers, lakes or the ocean.	A	Bank swallow does not nest in Marin County. The BSA lacks any cliff habitat which this species requires for nesting. The species may pass through the BSA on migration.
olive-sided flycatcher	*Contopus cooperi*	SSC, BCC	Summer resident. Typical breeding habitat is montane coniferous forests. At lower elevations, also occurs in wooded canyons and mixed forests and woodlands. Often associated with forest edges. Arboreal nest sites located well off the ground.	HP	The BSA contains riparian woodland dominated by California bay trees which are not typically used for nesting. However, the woodland may support nesting and foraging within the BSA.

Common Name	Scientific Name	Status	General Habitat Description	Habitat Present/ Absent	Rationale
Nuttall's woodpecker	*Picoides nuttallii*	BCC	Resident in lowland woodlands throughout much of California west of the Sierra Nevada. Typical habitat is dominated by oaks.	HP	Riparian woodland habitat within and surrounding the BSA may provide suitable nest-trees and foraging habitat to support this species.
oak titmouse	*Baeolophus inornatus*	BCC	Oak woodland and savannah, open broad-leaved evergreen forests containing oaks, and riparian woodlands. Associated with oak and pine-oak woodland and arborescent chaparral	HP	Riparian woodland within and surrounding the BSA provides potential nest-trees and foraging habitat to support this species.
Allen's hummingbird	*Selaphorus sasin*	BCC	Breeds along the California coastline in habitats including mixed evergreen, Douglas fir, redwood and Bishop pine forests, riparian woodlands, nonnative eucalyptus and planted cypress groves, and occasionally live oak woodlands and coastal scrub with at least a scattering of trees, such as on north-facing slopes	HP	Riparian woodland habitat within and surrounding the BSA may provide suitable nest-trees and foraging habitat to support nesting by this species.
rufous hummingbird	*Selasphorus rufus*	BCC	Spring migrant; does not breed in California. Favors habitats rich in nectar-producing flowers. Nests in berry tangles, shrubs, deciduous forests and conifers. Favors habitats rich in nectar-producing flowers.	A	The BSA is outside of the known breeding range for this species, but rufous hummingbird may be observed during migration seasons.

Common Name	Scientific Name	Status	General Habitat Description	Habitat Present/ Absent	Rationale
loggerhead shrike	*Lanius ludovicianus*	SSC, BCC	Primarily a year-round resident in open habitats including woodland, grassland, savannah and agricultural areas. Prefers areas with sparse shrubs, trees, posts, and other suitable perches for foraging. Preys upon large insects and small vertebrates. Nests are well-concealed in a densely-foliaged shrub or tree.	A	The BSA and immediate vicinity are residential development and riparian woodland which do not provide nesting habitat for the species. The BSA does not contain open areas such as agricultural fields, grasslands or marsh that are typically used by this species.
yellow warbler	*Setophaga (Dendroica) petechia brewsteri*	SSC, BCC	Summer resident throughout much of California. Breeds in riparian vegetation close to water, including streams and wet meadows. Microhabitat used for nesting variable, but dense willow growth is typical. Occurs widely on migration.	A	The riparian woodland within the BSA does not contain dense understory typical for nesting by this species. This species may be observed foraging in the BSA.
saltmarsh common yellowthroat	*Geothlypis trichas sinuosa*	SSC, BCC	Resident of the San Francisco Bay region, in fresh and salt water marshes. Requires thick, continuous cover down to water surface for foraging; tall grasses, tule patches, willows for nesting.	A	The BSA is not within the known breeding distribution of this species. Suitable salt marsh habitat which is required for nesting and foraging is absent from the BSA and immediate surrounds.
yellow-breasted chat	*Icteria virens*	SSC	Summer resident, utilizing riparian areas with an open canopy, very dense understory, and trees for song perches. Nests in thickets of willow, blackberry, and wild grape.	A	The BSA and immediate vicinity are residential development and riparian woodland which do not provide nesting habitat for the species. The BSA lacks a dense riparian understory that this species requires. Furthermore, it is not known to nest within 10 miles of the BSA.

Common Name	Scientific Name	Status	General Habitat Description	Habitat Present/ Absent	Rationale
grasshopper sparrow	*Ammodramus savannarum*	SSC	Summer resident. Nests in open grassland habitats, generally with low- to moderate-height grasses and scattered shrubs. Nest typically placed on the ground and well-hidden. Secretive.	A	The BSA is located within riparian woodland habitat which is not suitable for this species. The BSA does not contain annual grassland that could support nesting or foraging by the species.
Alameda song sparrow	*Melospiza melodia pusillula*	SSC, BCC	Year-round resident of salt marshes bordering the south arm of San Francisco Bay. Inhabits primarily pickleweed marshes; nests placed in marsh vegetation, typically shrubs such as gumplant.	A	The BSA is not within the known breeding distribution of this species. The BSA lacks any marsh habitat that this subspecies requires for nesting and foraging.
Samuel's (San Pablo) song sparrow	*Melospiza melodia samuelis*	SSC, BCC	Resident of salt marshes along the north side of San Francisco and San Pablo Bays. Inhabits tidal sloughs in the *Salicornia* marshes; nests in *Grindelia* bordering slough channels.	A	The BSA is not within the known breeding distribution of this species. The BSA lacks any marsh habitat that this subspecies requires for nesting and foraging.
Bryant's savannah sparrow	*Passerculus sandwichensis alaudinus*	SSC	Year-round resident subspecies, associated with the coastal fog belt. Occupies upper tidally-influenced habitats and moist grasslands, often occurring where wetland communities merge into grassland. Nests in vegetation on or near the ground.	A	The BSA lacks the tidally influenced habitats and grasslands that this subspecies requires. The BSA is within low-density residential development and forested landscape.
Lawrence's goldfinch	*Carduelis lawrencei*	BCC	Resident to nomadic; inhabits oak woodlands, chaparral, riparian woodlands and other areas, often near water. Not known to breed in the vicinity of San Francisco Bay.	A	The BSA is within low-density residential development and forested landscape. This species is a very rare breeder in Marin County and typically inhabits the dry southern portions of the county, and the BSA does not contain chaparral or other xeric landscapes to support this species (Shuford 1993).

Common Name	Scientific Name	Status	General Habitat Description	Habitat Present/ Absent	Rationale
tricolored blackbird	*Agelaius tricolor*	SC, BCC, SSC	(Nesting colony) highly colonial species, most numerous in Central Valley and vicinity. Largely endemic to California. Requires open water, protected nesting substrate, and foraging area with insect prey within a few kilometers of the colony.	A	The BSA does not contain any open waters such as ponds, lakes or marsh habitat that supports foraging or nesting by the colony. Shrubs and other vegetation located along the banks in the vicinity of the BSA are not sufficiently dense or large enough to support nesting by this species.
yellow-headed blackbird	*Xanthocephalus xanthocephalus*	SSC	Migrant and local summer resident. Nests colonially in freshwater emergent wetlands with dense vegetation and deep water, often along borders of lakes or larger ponds. Forages primarily on large aquatic insects during the breeding period.	A	The BSA does not contain any open waters such as ponds, lakes or marsh habitat that supports foraging or nesting by a colony. The shrubs located along the banks in the vicinity of the BSA are not sufficiently dense or large enough to support nesting by this species.

Common Name	Scientific Name	Status	General Habitat Description	Habitat Present/ Absent	Rationale
Mammals					
pallid bat	*Antrozous pallidus*	SSC, WBWG	Found in deserts, grasslands, shrublands, woodlands, and forests. Most common in open, forages along river channels. Roost sites include old ranch buildings, rocky outcrops and caves within sandstone outcroppings. Roosts must protect bats from high temperatures. Very sensitive to disturbance of roosting sites.	A	The BSA and immediate vicinity are residential development and riparian woodland with no rock outcroppings or ranch type buildings to provide roosting sites. The bridge has no exposed cracks or seams and is regularly disturbed by vehicles and pedestrians; the structure and the surrounding area lack roosting sites for the species.
Townsend's big-eared bat	*Corynorhinus townsendii*	SSC, WBWG	This species is associated with a wide variety of habitats from deserts to mid-elevation mixed coniferous-deciduous forest. Females form maternity colonies in buildings, caves and mines and males roost singly or in small groups. Foraging occurs in open forest habitats where they glean moths from vegetation.	A	The BSA and immediate vicinity are residential development and riparian woodland. Buildings in the area are maintained and do not provide suitable roosting habitat. Additionally, there are no caves, mines or suitable openings in the bridge structure to support roosting by the species within the BSA.
western red bat	*Lasiurus blossevillii*	SSC, WBWG	This species is typically solitary, roosting primarily in the foliage of trees or shrubs. Day roosts are commonly in edge habitats adjacent to streams or open fields, in orchards, and sometimes in urban areas. There may be an association with intact riparian habitat (willows, cottonwoods, and sycamore).	A	The BSA and immediate vicinity are residential development and disturbed riparian woodland. The complexity of edge habitats required by the species is not present within the BSA. The species may fly over the BSA.

Common Name	Scientific Name	Status	General Habitat Description	Habitat Present/ Absent	Rationale
hoary bat	*Lasiurus cinereus*	WBWG	Prefers open habitats or habitat mosaics, with access to trees for cover and open areas or habitat edges for feeding. Roosts in dense foliage of medium to large trees. Feeds primarily on moths. Requires water.	A	The BSA and immediate vicinity are residential development and riparian woodland. The BSA does not provide suitable open foraging habitat which is required by the species. No suitable roost sites are present.
fringed myotis	*Myotis thysanodes*	WBWG	Associated with a wide variety of habitats including mixed coniferous-deciduous forest and redwoods/sequoia groves. Buildings, mines, and large snags are important day and night roosts.	A	The BSA and immediate vicinity are residential development and riparian woodland. No snags are present in or adjacent to the BSA to provide roosting habitat. The bridge structure has no suitable seams, cracks or crevices that might provide roosting habitat for the species. The species may occasionally fly through or forage over the BSA.
long-eared myotis	*Myotis evotis*	WBWG	Occurs in semiarid shrublands, sage, chaparral, and agricultural areas, but is usually associated with coniferous forests from seal level to 9000 feet. Individuals roost under exfoliating tree bark, and in hollow trees, caves, mines, cliff crevices, and rocky outcrops on the ground. They also sometimes roost in buildings and under bridges.	A	The BSA does not contain snags or trees large enough to contain cavities to provide roosting habitat. Additionally, no trees are to be removed by the proposed project. The bridge structure has no suitable seams, cracks or crevices that might provide roosting habitat for the species. This species may occasionally fly through or forage over the BSA.
long-legged myotis	*Myotis volans*	WBWG	Typically occupies mountainous or relatively rugged areas, dry coniferous forests, and sometimes oak or streamside woodlands, and deserts. Large hollow trees, rock crevices and buildings are important day roosts. Other roosts include caves, mines and buildings.	A	The BSA and immediate vicinity are residential development and riparian woodland. The BSA does not contain mines abandoned buildings or snags for roosting. There are no suitable openings in the bridge structure such as seams or cracks to allow bats to roost. The species may occasionally fly through or forage over the BSA.

Common Name	Scientific Name	Status	General Habitat Description	Habitat Present/ Absent	Rationale
silver-haired bat	*Lasionycteris noctivagans.*	WBWG	Summer habitats include coastal and montane coniferous forests, valley foothill woodlands, pinyon-juniper woodlands, and valley foothill and montane riparian habitats. This species is primarily a forest dweller, feeding over streams, ponds, and open brushy areas. It roosts in hollow trees, snags, buildings, rock crevices, caves, and under bark.	A	The BSA does not contain snags or trees large enough to contain cavities to provide roosting habitat. Additionally, no trees are to be removed by the proposed project. The bridge structure has no suitable seams, cracks or crevices that might provide roosting habitat for the species. This species may occasionally fly through or forage over the BSA.
salt-marsh harvest mouse	*Reithrodontomys raviventris*	FE, SE, CFP	Found only in the saline emergent wetlands of San Francisco Bay and its tributaries. Pickleweed is primary habitat. Do not burrow, build loosely organized nests. Require higher areas for flood escape.	A	The BSA and immediate vicinity are residential development and riparian woodland. Salt marshes that are required to support this species do not occur in the BSA.
Suisun shrew	*Sorex ornatus sinuosus*	SSC	Tidal marshes of the northern shores of San Pablo and Suisun Bays. Require dense low-lying cover and driftweed and other litter above the mean high tide line for nesting and foraging.	A	The BSA and immediate vicinity are residential development and riparian woodland. Salt marshes that are required to support this species do not occur in the BSA.
salt-marsh wandering shrew	*Sorex vagrans halicoetes*	SSC	Confined to small remnant stands of salt marsh found around the southern arm of the San Francisco Bay in San Mateo, Santa Clara, Alameda and Contra Costa counties. Inhabits salt marshes that provide dense cover with driftwood and other debris.	A	The BSA and immediate vicinity are residential development and riparian woodland. Salt marshes that are required to support this species do not occur in the BSA.

Common Name	Scientific Name	Status	General Habitat Description	Habitat Present/ Absent	Rationale
San Pablo vole	*Microtus californicus sanpabloensis*	SSC	Saltmarshes of San Pablo Creek, on the south shore of San Pablo Bay. Constructs burrow in soft soil. Feeds on grasses, sedges and herbs. Forms a network of runways leading from the burrow	A	The BSA and immediate vicinity are residential development and riparian woodland. Salt marshes that are required to support this species do not occur in the BSA.
American badger	*Taxidea taxus*	SSC	Most abundant in drier open stages of most shrub, forest, and herbaceous habitats, with friable soils. Requires friable soils and open, uncultivated ground. Preys on burrowing rodents.	A	The BSA and immediate vicinity are residential development and riparian woodland. Friable soils which support the preferred prey for badgers and badger dens do not occur within the BSA.
Point Reyes jumping mouse	*Zapus trinotatus orarius*	SSC	Bunch grass marshes on the uplands of Point Reyes in areas safe from continuous inundation. Builds grassy nests on ground under vegetation, burrows in winter.	A	The BSA and surrounding area are residential developments and riparian woodland. The BSA lacks marsh or grasslands that this subspecies requires for nesting and foraging, and the BSA is outside the known range of this subspecies.
Point Reyes mountain beaver	*Aplodontia rufa phaea*	SSC	The Point Reyes mountain beaver is only known to occur in western Marin County, almost entirely within Point Reyes National Seashore. It occurs on cool, moist, north-facing slopes in moderately dense coastal scrub. Burrows are typically constructed in dense thickets or in forest openings; and it feeds on coyote brush, sword fern, cow parsnip, black berries, poison oak, California nettle, and thistle.	A	The BSA is not within the known breeding distribution of this species. The BSA and immediate vicinity are residential development and riparian woodland. The BSA does not contain any coastal scrub habitat which is required by the species.

Common Name	Scientific Name	Status	General Habitat Description	Habitat Present/ Absent	Rationale
ringtail (ring-tailed cat)	*Bassariscus astutus*	CFP	Is widely distributed throughout most of California, but absent from some portions of the Central Valley and northeastern California. The species is nocturnal, primarily carnivorous and is associated with a mixture of dry forest and shrubland in close association with rocky areas and riparian habitat, using hollow trees and cavities for shelter.	A	The BSA and immediate vicinity are residential development and riparian woodland with an open understory. Anthropogenic disturbances in the area and an absence of suitable trees to provide cavities make the species unlikely to occur.
southern sea otter	*Enhydra lutris nereis*	FT, MMPA: SSC, CFP	Nearshore marine environments from about Año Nuevo, San Mateo County to Point Sal, Santa Barbara County.	A	The BSA is not within the known breeding distribution of this species. Additionally, The BSA lacks any marine habitat which is required by this species.
Amphibians and Reptiles					
western pond turtle	*Actinemys marmorata*	SSC	Associated with permanent or nearly permanent water in a wide variety of habitats. Requires basking sites. Nests sites may be found up to 0.5 kilometers from water.	A	There are no known occurrences of this species in the watershed or vicinity. The BSA is over 2 miles from the nearest documented occurrence in a different watershed (CDFW 2017a). The BSA is canopied and does not provide suitable basking areas to support the species.
California giant salamander	*Dicamptodon ensatus*	SSC	Associated with permanent or nearly permanent water in a wide variety of habitats. Requires basking sites. Nests sites may be found up to 0.5 kilometers from water.	A	There are no known occurrences of this species within 2.5 miles of the BSA. The modifications to the creek channel within the BSA including retaining walls and abutments reduce potential for this species to occur within the BSA.

Common Name	Scientific Name	Status	General Habitat Description	Habitat Present/ Absent	Rationale
foothill yellow-legged frog	*Rana boylii*	SSC	Found in or near rocky streams in a variety of habitats. Prefers partly-shaded, willow streams and riffles with a rocky substrate; requires at least some cobble-sized substrate for egg-laying. Needs at least 15 weeks to attain metamorphosis. Feeds on both aquatic and terrestrial invertebrates.	A	This species has not been documented within the watershed, and the closest documented occurrence is 2.5 miles east of the BSA in a different watershed (CDFW 2017a).
California red-legged frog	*Rana draytonii*	FT, SSC	Lowlands and foothills in or near permanent sources of deep water with dense, shrubby or emergent riparian vegetation. Requires 11 to 20 weeks of inundation for larval development. Must have access to estivation habitat.	A	The BSA and immediate vicinity are residential development and riparian woodland. No ponds, lakes, or creek backwaters exist nearby that could provide adequate still water habitat to support breeding by the species. This species is not known within 5 miles of the BSA. (CDFW 2017a).
Fishes					
pacific lamprey	*Entosphenus (=Lampetra) tridentatus*	SSC	Spawn between March and July in gravel bottomed streams in riffle habitat. Larvae drift downstream to areas of low velocity and fine substrates and are relatively immobile in the stream substrates.	A	A total barrier to fish passage at Bolinas Avenue prevents anadromous fish such as lamprey from being able to access the creek. This species and its habitat are not present.
river lamprey	*Lampetra ayresi*	SSC	Lower Sacramento River, San Joaquin River and Russian River. May occur in coastal streams north of San Francisco Bay. Adults need clean, gravelly riffles, Ammocoetes need sandy backwaters or stream edges, good water quality and temps < 25 degrees C.	A	A total barrier to fish passage at Bolinas Avenue prevents anadromous fish such as lamprey from being able to access the creek. This species and its habitat are not present.

Common Name	Scientific Name	Status	General Habitat Description	Habitat Present/ Absent	Rationale
white sturgeon	*Acipenser transmontanus*	SSC	Found in most estuaries along the Pacific coast. Adults in the San Francisco Bay Estuary system spawn in the Sacramento River and are not known to enter freshwater or non-tidal reaches of Estuary streams. Spawn May through June.	A	The BSA is not within the known distribution of this species (UC Davis 2017), and a total barrier to fish passage at Bolinas Avenue prevents anadromous fish from being able to access the creek. This species and its habitat are not present.
green sturgeon	*Acipenser medirostris*	FT, SSC	Spawn in the Sacramento River and the Klamath River. Spawn at temperatures between 8-14 degrees C. Preferred spawning substrate is large cobble, but can range from clean sand to bedrock.	A	The BSA is not within the known distribution of this species (UC Davis 2017), and a total barrier to fish passage at Bolinas Avenue prevents anadromous fish from being able to access the creek. This species and its habitat are not present.
tidewater goby	*Eucyclogobius newberryi*	FE, SSC	Brackish water habitats along the California coast from Agua Hedionda Lagoon, San Diego County to the mouth of the Smith River. Found in willow lagoons and lower stream reaches, they need fairly still but not stagnant water and high oxygen levels.	A	The BSA is not within the known distribution of this species (UC Davis 2017). The BSA is not within the known breeding distribution of this species. The BSA lacks any lagoon habitat which is required by this species.
delta smelt	*Hypomesus transpacificus*	FT, SE, RP	Lives in the Sacramento-San Joaquin estuary in areas where salt and freshwater systems meet. Occurs seasonally in Suisun Bay, Carquinez Strait and San Pablo Bay.	A	The BSA is not within the known distribution of this species (UC Davis 2017). The BSA is not within the known spawning distribution of this species. The BSA lacks any brackish water habitat which is required by this species.
Tomales roach	*Lavinia symmetricus* ssp. *symmetricus*	SSC	Habitat generalists. Tolerant of relatively high temperatures and low oxygen levels, however unable to tolerate very saline water. Tributaries to Tomales Bay.	A	The BSA is not within the known distribution of this species (UC Davis 2017).

Common Name	Scientific Name	Status	General Habitat Description	Habitat Present/ Absent	Rationale
Coho salmon - central California coast	*Oncorhynchus kisutch*	FE, SE	State listing is limited to Coho south of San Francisco Bay. Federal listing is limited to naturally spawning populations in streams between Humboldt County and Santa Cruz County. Spawn in coastal streams 4-14C. Prefer beds of loose, silt-free, coarse gravel and cover nearby.	A	This species is extirpated from the waters of San Francisco Bay and its tributaries (NMFS 2012). A total barrier to fish passage at Bolinas Avenue prevents anadromous fish from being able to access the creek.
steelhead - central California coast DPS	*Oncorhynchus mykiss*	FT	Occurs from the Russian River south to Soquel Creek and Pajaro River. Also in San Francisco and San Pablo Bay Basins. Adults migrate upstream to spawn in cool, clear, well-oxygenated streams. Juveniles remain in fresh water for 1 or more years before migrating downstream to the ocean.	A	A total barrier to fish passage at Bolinas Avenue prevents anadromous fish such as steelhead from being able to access the creek. Therefore, steelhead and suitable habitat are absent from the BSA.
chinook salmon – Central Valley fall/late fall-run ESU	*Oncorhynchus tshawytscha*	SSC	Populations spawning in the Central Valley, Napa and Petaluma Rivers and their tributaries. Adults migrate upstream to spawn in cool, clear, well-oxygenated streams. Juveniles remain in fresh water for 1 or more years before migrating downstream to the ocean	A	The BSA is not within the known spawning distribution of this species, and a total barrier to fish passage at Bolinas Avenue prevents anadromous fish such as salmon from being able to access the creek.

Common Name	Scientific Name	Status	General Habitat Description	Habitat Present/ Absent	Rationale
chinook salmon - California coastal ESU	*Oncorhynchus tshawytscha*	FT, RP	California Coastal Chinook Salmon ESU includes all naturally spawned populations of Chinook salmon from rivers and streams south of the Klamath River (exclusive) to the Russian River (inclusive). Adult numbers depend on pool depth and volume, amount of cover, and proximity to gravel.	A	The BSA is not within the known breeding distribution of this species (UC Davis 2017), and a total barrier to fish passage at Bolinas Avenue prevents anadromous fish such as salmon from being able to access the creek.
Sacramento splittail	*Pogonichthys macrolepidotus*	SSC	Endemic to California's Central Valley and the Sacramento-San Joaquin Delta. Primarily freshwater fish, but are tolerant of moderate salinity. Spawn on submerged vegetation in temporarily flooded upland and riparian habitat.	A	The BSA is not within the spawning or known distribution of this species. The BSA does not contain any flooded upland or slow slough like habitat which this species requires for spawning.
longfin smelt	*Spirinchus thaleichthys*	FC, ST, SSC	Euryhaline, nektonic and anadromous. Found in open waters of estuaries, mostly in middle or bottom of water column. Prefer salinities of 15 to 30 ppt, but can be found in completely freshwater to almost pure seawater.	A	The BSA is not within the known spawning distribution of this species. The BSA lacks any marine or brackish water habitats which may be used for foraging or rearing habitat by the species.
eulachon	*Thaleichthys pacificus*	FT, SSC	Occur in nearshore ocean waters and to 1,000 feet (300 m) in depth, except for the brief spawning runs into their natal (birth) streams. Ranges from northern California to southwest Alaska and southeastern Bering Sea.	A	The BSA is not within the known distribution of this species. Additionally, the BSA lacks any marine or brackish water habitats which may be used for foraging or rearing habitat by the species.

Common Name	Scientific Name	Status	General Habitat Description	Habitat Present/ Absent	Rationale
Invertebrates					
Tomales isopod	*Caecidotea tomalensis*	SSI	Inhabits localized fresh-water ponds or streams with still or near-still water in several San Francisco Bay Area counties.	A	Fairfax Creek within the BSA is a flowing creek which does not provide the still water or pond habitat required by the species.
Marin blind harvestman	*Calicina diminua*	SSI	Known only from the type locality. Taken under serpentine on a grassland hillside on San Marin Drive, Novato, Marin County. They occur in mesic habitats, but are absent from situations where soils are saturated or periodically inundated. Most species occur under medium to large undisturbed rocks that are in contact with the soil.	A	Soils within Fairfax Creek are often inundated and would thus preclude this species' presence. The BSA is also highly modified with man-made structures such as wingwalls on the banks. This species has only been documented at the type locality in Novato, approximately 7 miles north of the BSA.
Bay checkerspot butterfly	*Euphydryas editha bayensis*	FT, SSI	Restricted to native grasslands on outcrops of serpentine soil in the vicinity of San Francisco Bay. Plantago erecta is the primary host plant; Orthocarpus densiflorus and O. purpurscens are the secondary host plants.	A	The BSA is not within the known breeding distribution of this species. The BSA and immediate vicinity are residential development and riparian woodland. The BSA does not contain grassland required to support the host plants of the species.
San Bruno elfin butterfly	*Callophrys mossii bayensis*	FE, SSI	Inhabits coastal mountainous areas with grassy ground cover, mainly in the vicinity of San Bruno Mountain, San Mateo County. Colonies are located on steep, north-facing slopes within the fog belt. Larval host plant is *Sedum spathulifolium.*	A	The BSA is not within the known breeding distribution of this species. The BSA and immediate vicinity are residential development and riparian woodland. The BSA contains no grassland that may support the host plants required by the species.

Common Name	Scientific Name	Status	General Habitat Description	Habitat Present/ Absent	Rationale
monarch butterfly	*Danaus plexippus*	SSI	Winter roost sites extend along the coast from northern Mendocino to Baja California, Mexico. Roosts located in wind-protected tree groves (eucalyptus, Monterey pine, Monterey cypress), with nectar and water sources nearby.	A	Roost sites for monarchs are primarily in eucalyptus groves along the coast. No groves used as roost sites have been recorded within 7 miles of the BSA. The BSA is inland of the coast; however, the species may migrate through the area in route to roost and foraging sites.
Ricksecker's water scavenger beetle	*Hydrochara rickseckeri*	SSI	Aquatic; known only from pond habitats scattered around the San Francisco Bay area.	A	The BSA and immediate vicinity are residential development and riparian woodland. Fairfax Creek within the BSA does not provide pond habitat known to support the species.
mission blue butterfly	*Icaricia icarioides missionensis*	FE, RP, SSI	Inhabits grasslands of the San Francisco peninsula. Three larval host plants: *Lupinus albifrons, L. variicolor*, and *L. formosus*, of which *L. albifrons* is favored.	A	The BSA is not within the known breeding distribution of this species. The BSA and immediate vicinity are residential development and riparian woodland. The BSA does not contain grassland required to support the host plants of the species.
Callippe silverspot butterfly	*Speyeria callippe*	FE, SSI	Host plant is *Viola pedunculata*. Most adults found on east-facing slopes; males congregate on hilltops in search of females.	A	The BSA is not within the known breeding distribution of this species. The BSA and immediate vicinity are residential development and riparian woodland. The BSA does not contain grassland required to support the host plants of the species.
Myrtle's silverspot butterfly	*Speyeria zerene myrtleae*	FE, RP, SSI	Restricted to the foggy, coastal dunes/hills of the Point Reyes peninsula; extirpated from coastal San Mateo County. Larval food plant thought to be Viola adunca.	A	The BSA is not within the known breeding distribution of this species. The BSA and immediate vicinity are residential development and riparian woodland. The BSA does not contain grassland to support the host plants or foraging by the species.

Common Name	Scientific Name	Status	General Habitat Description	Habitat Present/ Absent	Rationale
California freshwater shrimp	*Syncaris pacifica*	FE, SE, RP, SSI	Endemic to Marin, Napa, and Sonoma counties. Found in low elevation, low gradient streams where riparian cover is moderate to heavy. Willow pools away from main stream flow. Winter: undercut banks with exposed roots. Summer: leafy branches touching water.	A	The BSA is not within the known breeding distribution of this species. Suitable habitat for the species is primarily found within northern Marin County along the border with Sonoma County. This species has not been documented in Fairfax Creek.
black abalone	*Haliotes cracherodii*	FE, SSI	Generally occur in areas of moderate to high surf in mid to low rocky intertidal areas.	A	The BSA does not contain any intertidal shores or marine environments which are required to support the species.
white abalone	*Haliotis sorenseni*	FE, SSI	Rocky pinnacles and deep reefs in southern California; especially those off the Channel Islands. Live at depths from 80 to 200 feet.	A	The BSA does not contain any intertidal shores or marine environments which are required to support the species.
Plants and Sensitive Natural Communities					
Sensitive Natural Communities					
Coastal Brackish Marsh, Coastal Terrace Prairie, Northern Coastal Salt Marsh, Serpentine Bunchgrass	NA	NA	NA	A	The BSA does not contain any of these habitats. No further actions are recommended for these Sensitive Natural Communities.

Common Name	Scientific Name	Status	General Habitat Description	Habitat Present/ Absent	Rationale
Sensitive Plants					
Sonoma alopecurus	*Alopecurus aequalis* var. *sonomensis*	FE, CNPS 1B.1	Freshwater marsh and swamp, and riparian scrub. 5-360 m. Flowers May-July.	A	All known occurrences of this species in the vicinity of the BSA are associated with coastal freshwater marsh and swamp, and riparian scrub. The BSA lacks suitable, sufficiently mesic habitat. No further actions are recommended for this species.
Napa false indigo	*Amorpha californica* var. *napensis*	CNPS 1B.2	Broadleaf upland forest, chaparral, cismontane woodland; openings in forest, woodland, and chaparral. 120-2,000 m. Flowers April-July.	HP	This woody perennial was not observed during the field surveys, which were conducted when this species would be identifiable. No further actions are recommended for this species.
Bent-flowered fiddleneck	*Amsinckia lunaris*	BLMS, CNPS 1B.2	Cismontane woodland, valley and foothill grassland. 5-500 m. Flowers March-June.	A	The natural areas within the BSA are generally too shady for this species. This perennial species was not observed during the field surveys, which were conducted during the flowering period. No further actions are recommended for this species.
Franciscan manzanita	*Arctostaphylos franciscana*	FE, CNPS 1B.1	Serpentinite outcrops in chaparral. 60-300 m. Flowers January-April.	A	All known occurrences of this species in the vicinity of the BSA are associated with serpentine substrates. The BSA lacks suitable serpentine soils and chaparral habitat. No manzanitas (a woody perennial) were observed in the BSA. No further actions are recommended for this species.
Mt. Tamalpais manzanita	*Arctostaphylos montana* ssp. *montana*	CNPS 1B.3	Generally serpentinite soil, valley and foothill grassland. 160-760 m. Flowers February-April.	A	All known occurrences of this species in the vicinity of the BSA are associated with serpentine substrates. The BSA lacks suitable serpentine soils; and no manzanitas (a woody perennial) were observed in the BSA. No further actions are recommended for this species.

Common Name	Scientific Name	Status	General Habitat Description	Habitat Present/ Absent	Rationale
Presidio manzanita	*Arctostaphylos montana* ssp. *ravenii*	FE,SE, CNPS 1B.1	Serpentinite soil, chaparral, coastal prairie, coastal scrub. 20-215 m. Flowers February-April.	A	All known occurrences of this species in the vicinity of the BSA are associated with serpentine substrates. The BSA lacks suitable serpentine soils and chaparral habitat. No manzanitas (a woody perennial) were observed in the BSA. No further actions are recommended for this species.
Marin manzanita	*Arctostaphylos virgata*	CNPS 1B.2	Broad-leaved upland forest, closed cone coniferous forest, chaparral, north coast coniferous forest, generally on sandstone or granitic soil. 160-760 m. Flowers December-March.	A	No manzanitas (a woody perennial) were observed. No further actions are recommended for this species.
Marsh sandwort	*Arenaria paludicola*	FE, SE, CNPS 1B.1	Freshwater marsh. 10-170 m. Flowers May-August.	A	No suitable habitat. No further actions are recommended for this species.
Coastal marsh milk-vetch	*Astragalus pycnostachyus* var. *pycnostachyus*	BLMS, CNPS 1B.2	Coastal salt marshes, coastal dunes, coastal scrub, stream sides. 0-30 m. Flowers April-October.	A	No suitable habitat. No further actions are recommended for this species.
Alkali milk-vetch	*Astragalus tener* var. *tener*	CNPS 1B.2	Alkali playa, valley and foothill grassland, vernal pools. 1-170 m. Flowers March-June.	A	No suitable habitat. No further actions are recommended for this species.
Thurber's reed grass	*Calamagrostis crassiglumis (C. stricta* ssp. *inexpansa)*	CNPS 2B.1	Mesic coastal scrub, freshwater marshes and swamps. 5-50 m. Flowers May-August.	A	This species is a rhizomatous perennial that would have been observed during surveys, if it was present. No further actions are recommended for this species.
Tiburon mariposa lily	*Calochortus tiburonensis*	FT, ST, CNPS 1B.1	Serpentinite soil, valley and foothill grassland. Open rocky, serpentine. 50-150 m. Flowers March-June.	A	No suitable habitat. No further actions are recommended for this species.

Common Name	Scientific Name	Status	General Habitat Description	Habitat Present/ Absent	Rationale
Seaside bittercress	*Cardamine angulata*	CNPS 2B.1	North coast coniferous forest, lower montane coniferous forest, wet places. 65-951 m. Flowers April-June.	A	This perennial species was not observed during the field surveys, which were conducted during the flowering period. The closest known occurrence of this species is a 1915 observation near the Town of Lagunitas, over 5 miles away. No further actions are recommended for this species.
Bristly sedge	*Carex comosa*	CNPS 2B.1	Marshes and swamps, lake margins, wet places.5-1,005 m. Flowers July-September.	A	The site does not have appropriate marsh, swamp, or similar habitat. No further actions are recommended for this species.
Lyngbye's sedge	*Carex lyngbyei*	CNPS 1B.1	Brackish or freshwater marshes. 0-10 m. Flowers May-August.	A	The site does not have appropriate marsh, or similar habitat. No further actions are recommended for this species.
northern meadow sedge	*Carex praticola*	CNPS 2B.2	Moist to wet meadows and seeps. (20) 500-3200 m. Flowers May-July	A	This cespitose perennial was not observed during surveys. No further actions are recommended for this species.
Tiburon Indian paintbrush	*Castilleja affinis* ssp. *neglecta*	FE, ST, CNPS 1B.2	Rocky serpentinite soil, valley and foothill grassland. 75-400 m. Flowers April-June.	A	No suitable habitat. No further actions are recommended for this species.
Mason's ceanothus	*Ceanothus masonii*	CNPS 1B.2	Dry rocky areas, chaparral. 230-500 m. Flowers March-April.	A	No suitable habitat. No further actions are recommended for this species.
Point Reyes bird's beak	*Chloropyron maritimum* ssp. *palustre*	BLMS, CNPS 1B.2	Coastal salt marsh. 0-10 m. Flowers June-October.	A	No suitable coastal salt marsh habitat. No further actions are recommended for this species.
San Francisco Bay spineflower	*Chorizanthe cuspidata* var. *cuspidata*	CNPS 1B.2	Coastal bluff scrub, coastal dues, coastal prairie. Coastal scrub, sandy. 10-305 m. Flowers June-August.	A	All known occurrences of this species in the vicinity of the BSA are associated with sandy soils in coastal habitat. The BSA lacks suitable sandy coastal habitat. No further actions are recommended for this species.
Sonoma spineflower	*Chorizanthe valida*	CNPS 1B.1	Sandy coastal prairie. 10-305 m. Flowers June-August.	A	All known occurrences of this species in the vicinity of the BSA are associated with sandy soils in coastal prairie habitat. The BSA lacks suitable habitat. No further actions are recommended for this species.

Common Name	Scientific Name	Status	General Habitat Description	Habitat Present/ Absent	Rationale
Franciscan thistle	*Cirsium andrewsii*	CNPS 1B.2	Moist places in broadleafed upland forest on the coast, coastal bluff scrub, coastal prairie, and coastal scrub. 0-150 m. Flowers March-July.	A	No suitable habitat. No further actions are recommended for this species.
Mt. Tamalpais thistle	*Cirsium hydrophilum* var. *vaseyi*	CNPS 1B.2	Moist places in broadleafed upland forest, chaparral, meadows and seeps on serpentine. 240-620 m Flowers May-August.	A	No suitable serpentine habitat. No further actions are recommended for this species.
Presidio clarkia	*Clarkia franciscana*	FE, SE, CNPS 1B.1	Serpentinite soil, valley and foothill grassland. 25-335 m. Flowers May-July.	A	No suitable serpentine habitat. No further actions are recommended for this species.
Round-headed Chinese houses	*Collinsia corymbosa*	CNPS 1B.2	Coastal dunes.0-20 m. Flowers April-June.	A	No suitable dune habitat. No further actions are recommended for this species.
San Francisco collinsia	*Collinsia multicolor*	CNPS 1B.2	Closed-cone coniferous forest, coastal scrub, on decomposed shale in humus. 30-250m. Flowers March-May.	A	No suitable habitat. No further actions are recommended for this species.
Western leatherwood	*Dirca occidentalis*	CNPS 1B.2	Mesic sites, broadleafed upland forest, closed-cone conifer forest, chaparral, cismontane woodland, north coast coniferous forest, riparian forest, riparian woodland. 25-425 m. Flowers January- April.	HP	Woodland habitat within the BSA may support this species. This perennial woody shrub species was not observed during the field surveys, which were conducted when this species would be identifiable. No further actions are recommended for this species.
Tiburon buckwheat	*Eriogonum luteolum* var. *caninum*	CNPS 1B.2	Serpentinite soil, chaparral, coastal prairie, valley and foothill grassland. 0-700 m. Flowers June-September.	A	No suitable habitat. No buckwheats were observed during surveys. No further actions are recommended for this species.
Koch's cord moss	*Entosthodon kochii*	CNPS 1B.3	Cismontane woodland and valley foothill grassland. Know from Plumas NF on serpentine river bank. 500-1,000 m. Flowers N/A.	A	No suitable serpentine habitat. No further actions are recommended for this species.

Common Name	Scientific Name	Status	General Habitat Description	Habitat Present/ Absent	Rationale
Minute pocket moss	*Fissidens pauperculus*	USFSS, CNPS 1B.2	North coast coniferous forest. On damp soil on the coast and in dry streambeds and banks on soil in humus comprised of heavily decayed wood. 10-100 m. Flowers N/A (best observed during the wet season).	A	There is no north coast coniferous forest habitat on the site. This species was not observed during the field surveys, which occurred during the wet season when this species is identifiable, though common member of the same genus was found (*Fissidens crispus*). No further actions are recommended for this species.
Marin checker lily	*Fritillaria lanceolata* var. *tristulis*	CNPS 1B.1	Coastal bluff scrub, coastal prairie, coastal scrub. Canyons and riparian areas and rocky outcrops. 15-150 m. Flowers February-April.	HP	Though not coastal, there is riparian habitat in the BSA. However, no *Fritillaria* were observed during the field surveys, which were conducted during the flowering period. No further actions are recommended for this species.
Fragrant fritillary	*Fritillaria liliacea*	USFSS, CNPS 1B.2	Coastal scrub, valley and foothill grassland, coastal prairie. Usually on clay soils, often on serpentine in grassland.3-410 m. Flowers February- April.	A	No suitable habitat. No further actions are recommended for this species.
Blue coast gilia	*Gilia capitata* ssp. *chamissonis*	CNPS 1B.1	Coastal dunes, coastal scrub. Elevation range: 2-180 m. Flowers April-July.	A	The BSA lacks suitable coastal dune and scrub habitat. No further actions are recommended for this species.
Woolly-headed gilia	*Gilia capitata* ssp. *tomentosa*	CNPS 1B.1	Rocky serpentine outcrops in coastal bluff scrub and valley and foothill grassland. 10-220 m. Flowers May-July.	A	Known occurrences of this species in the vicinity of the BSA are associated with serpentine soils in coastal bluff scrub and valley and foothill grassland. The BSA lacks suitable habitat. No further actions are recommended for this species.
Dark-eyed gilia	*Gilia millefoliata*	BLMS, CNPS 1B.2	Coastal dunes. 2-30 m. Flowers April-July.	A	All known occurrences of this species in the vicinity of the BSA are associated with coastal dunes. The BSA lacks suitable habitat. No further actions are recommended for this species.

Common Name	Scientific Name	Status	General Habitat Description	Habitat Present/ Absent	Rationale
Diablo helianthella	*Helianthella castanea*	CNPS 1B.2, BLMS	Broadleaved upland forest, chaparral, coastal scrub, cismontane woodland, riparian woodland, valley and foothill grassland. 25-1150 m. Flowers April to June.	A	This species requires more sun than is found in the BSA. No *Helianthella* were observed during the field surveys, which were conducted during the flowering period. No further actions are recommended for this species.
Congested headed hayfield tarplant	*Hemizonia congesta* ssp. *congesta (Hemizonia congesta* ssp. *leucocephala)*	CNPS 1B.2	Coastal scrub, valley and foothill grassland; located in grassy valleys, hills, and fallow fields. 20-550 m. Flowers April-November.	A	All known occurrences of this species in the vicinity of the BSA are associated with coastal scrub and valley and foothill grassland. Surveys were conducted during the flowering period. The BSA lacks suitable habitat. No further actions are recommended for this species.
Marin western flax	*Hesperolinon congestum*	FT, ST, CNPS 1B.1	Serpentinite soil, chaparral, valley and foothill grassland. Known only from Marin, San Francisco, and San Mateo counties. In serpentine barrens and in serpentine grassland chaparral. 5-370 m. Flowers April-July.	A	No suitable habitat. No further actions are recommended for this species.
Water star-grass	*Heteranthera dubia*	CNPS 2B.2	Requires a pH of 7 or higher, usually in slightly eutrophic waters. Marshes and swamps (alkaline, still or slow-moving water). 30-1495 m. Flowers July-October.	A	No suitable habitat. No further actions are recommended for this species.
Santa Cruz tarplant	*Holocarpha macradenia*	FT, CE, CNPS 1B.1	Coastal prairie, coastal scrub, Valley and foothill grassland, often clay. 10-20 m. Flowers June-October.	A	No suitable habitat. No further actions are recommended for this species.
Kellogg's horkelia	*Horkelia cuneata* var. *sericea*	CNPS 1B.2, BLMS	Closed-cone coniferous forest, chaparral (maritime), coastal dunes, coastal scrub, openings, sandy/gravelly. 10-200 m. Flowers April-Sept.	A	No suitable habitat. No further actions are recommended for this species.

Common Name	Scientific Name	Status	General Habitat Description	Habitat Present/ Absent	Rationale
Thin-lobed horkelia	*Horkelia tenuiloba*	CNPS 1B.2, BLMS	Broadleaf upland forest, chaparral, valley and foothill grassland/mesic openings, sandy. 50-500 m. Flowers April-July.	HP	Limited poor quality, disturbed habitat present. No *Horkelia* were observed during the field surveys, which were conducted during the flowering period. No further actions are recommended for this species.
Small groundcone	*Kopsiopsis hookeri*	CNPS 2.3	North coast coniferous forest, generally on salal (*Gaultheria shallon*) and *Vaccinium*. 90-885 m. Flowers April-August.	A	The BSA lacks suitable habitat for this species. No salal present. No further actions are recommended for this species.
Beach layia	*Layia carnosa*	FE, SE, CNPS 1B.1	Sandy soil, coastal dunes, coastal scrub. 0-60 m. Flowers March-July.	A	All known occurrences of this species in the vicinity of the BSA are associated with coastal scrub and dunes. The BSA lacks suitable habitat. No further actions are recommended for this species.
Rose leptosiphon	*Leptosiphon rosaceus*	CNPS 1B.1	Coastal bluff scrub. 0-100 m. Flowers April-July.	A	All known occurrences of this species in the vicinity of the BSA are associated with coastal bluff scrub. The BSA lacks suitable habitat. No further actions are recommended for this species.
San Francisco lessingia	*Lessingia germanorum*	FE, SE, CNPS 1B.1	Coastal scrub (remnant dunes) 25-110 m. Flowers June-November.	A	The BSA lacks suitable habitat. No further actions are recommended for this species.
Tamalpais lessingia	*Lessingia micradenia var. micradenia*	CNPS 1B.2	Chaparral, valley and foothill grassland; usually located on serpentine substrate, often roadsides. 10-500 m. Flowers June-October.	A	The BSA lacks serpentine and suitable habitat. No further actions are recommended for this species.
Pitkin Marsh lily	*Lilium pardalinum* ssp. *pitkinense*	FE, SE, CNPS 1B.1	Cismontane woodland, meadows and seeps, marshes and swamps (freshwater), mesic and sandy. 35-65 m. Flowers June-July.	A	Known only from areas near Sebastopol. The mesic area in the BSA does not provide appropriate habitat. No further actions are recommended for this species.

Common Name	Scientific Name	Status	General Habitat Description	Habitat Present/ Absent	Rationale
Marsh microseris	*Microseris paludosa*	CNPS 1B.2	Moist places, cismontane woodland, coastal scrub, valley and foothill grassland, (Moist grassland or open woodland). 5-300 m. Flowers April-July.	A	This species is typically found in areas that receive more sunlight than the site. It was not observed during the field surveys, which were conducted during the flowering period. No further actions are recommended for this species.
Marin County navarretia	*Navarretia rosulata*	CNPS 1B.2	Rocky serpentinite soil, closed-cone coniferous forest, chaparral. 200-635 m. Flowers May-July.	A	All known occurrences of this species in the vicinity of the BSA are associated with serpentinite soil. The BSA lacks suitable habitat. No further actions are recommended for this species.
White-rayed pentachaeta	*Pentachaeta bellidiflora*	FE, SE, CNPS 1B.1	Valley and foothill grassland, coastal scrub, coastal prairie, open dry rocky areas, often serpentine. 35-620 m. Flowers March-May.	A	The BSA lacks suitable open dry rocky habit. This species was not observed during the field surveys, which were conducted during the flowering period. No further actions are recommended for this species.
Choris' popcorn-flower	*Plagiobothrys chorisianus* var. *chorisianus*	CNPS 1B.2	Moist places, coastal prairie, coastal scrub, chaparral, seasonal marsh. Known only from San Francisco southward. 60-485 m. Flowers March-June	A	The BSA lacks suitable habit. This species was not observed during the field surveys, which were conducted during the flowering period. No further actions are recommended for this species.
San Francisco popcorn-flower	*Plagiobothrys diffusus*	SE, CNPS 1B.1	Seasonally moist places, coastal prairie, valley and foothill grassland. Known only from San Francisco southward. 0-100 m. Flowers April-June.	A	The BSA lacks suitable habit. This species was not observed during the field surveys, which were conducted during the flowering period. No further actions are recommended for this species.
Hairless popcorn-flower	*Plagiobothrys glaber*	CNPS 1A	Alkaline meadows and seeps, coastal salt marshes.0-100 m. Flowers March-May	A	Historically occurred on grassy slopes with marine influence. The BSA lacks suitable habit. This species was not observed during the field surveys. No further actions are recommended for this species.

Common Name	Scientific Name	Status	General Habitat Description	Habitat Present/ Absent	Rationale
North coast semaphore grass	*Pleuropogon hooverianus*	BLMS, ST, CNPS 1B.1	Moist, open to shaded areas, broadleafed upland forest, meadows and seeps, north coast coniferous forest. Marshy areas.10-1,150 m. Flowers May-August.	A	The BSA lacks suitable habit. There is only a small amount of vegetation at the edge of the creekbed and the banks are too dry. This species was not observed during the field surveys, which were conducted during the flowering period. No further actions are recommended for this species.
Oregon polemonium	*Polemonium carneum*	CNPS 2B.2	Coastal prairie, coastal scrub, lower montane coniferous forest. 0-1,830m. Flowers April-September.	A	The BSA lacks suitable habitat. This species was not observed during the field surveys, which was conducted during the flowering period. No further actions are recommended for this species.
Tamalpais oak	*Quercus parvula* var. *tamalpaisensis*	CNPS 1B.3	Lower montane coniferous forest. 100-750 m. Flowers March-April.	HP	Limited suitable habitat for this species may be present in the uplands in BSA. However, this is a woody shrub, which if present, would have been observed during the field surveys. No further actions are recommended for this species.
Adobe sanicle	*Sanicula maritima*	USFSS, SR, CNPS 1B.1	Chaparral, coastal prairie, meadows and seeps, valley and foothill grassland, often clay and serpentine. 30-240 m. Flowers February-May.	A	Suitable clay and serpentine habitat for this species is not present in the BSA. The closest known occurrence is a population believed to be extinct, south of San Francisco. No further actions are recommended for this species.
Point Reyes checkerbloom	*Sidalcea calycosa* ssp. *rhizomata*	CNPS 1B.2	Freshwater marshes and swamps near the coast. 3-75 m. Flowers April-September.	A	All known occurrences of this species in the vicinity of the BSA are associated with marsh habitat. The BSA lacks suitable marsh habitat. No further actions are recommended for this species.
Marin checkerbloom	*Sidalcea hickmanii* ssp. *viridis*	CNPS 1B.1	Chaparral; located on serpentine or volcanic substrate; often observed following burns. 50-425 m. Flowers May-June.	A	All known occurrences of this species in the vicinity of the BSA are associated with chaparral on serpentine or volcanic substrates. The BSA lacks suitable habitat. No further actions are recommended for this species.

Common Name	Scientific Name	Status	General Habitat Description	Habitat Present/ Absent	Rationale
San Francisco campion	*Silene verecunda* ssp. *verecunda*	CNPS 1B.2	Coastal bluff scrub, chaparral, coastal prairie, coastal scrub, valley and foothill grassland, often mudstone, one on serpentine. 30-645 m. Flowers March-August.	A	This subspecies is typically found on sand, mudstone, or serpentine in coastal habitats. The BSA lacks suitable habitat. No further actions are recommended for this species.
Santa Cruz microseris	*Stebbinsoseris decipiens*	CNPS 1B.2	Open areas in broadleafed upland forest, closed-cone coniferous forest, chaparral, coastal prairie, coastal scrub, valley and foothill grassland. 30-645 m. Flowers April-May.	A	Suitable habitat for this species is not present within BSA due to the shady, mesic conditions and level of disturbance. It was not observed during the field surveys, which were conducted during the flowering period. No further actions are recommended for this species.
Tamalpais jewel-flower	*Streptanthus batrachopus*	CNPS 1B.3	Serpentinite soil, chaparral, closed-cone coniferous forest. 305-650 m. Flowers April-June.	A	All known occurrences of this species in the vicinity of the BSA are associated with serpentine outcrops or openings. The BSA lacks suitable habitat. No further actions are recommended for this species.
Tiburon jewel-flower	*Streptanthus glandulosus* ssp. *niger (previously Streptanthus niger)*	FE, SE, CNPS 1B.1	Serpentinite soil, valley and foothill grassland. 30-150 m. Flowers May-June.	A	All known occurrences of this species in the vicinity of the BSA are associated with thin rocky serpentine soil. The BSA lacks suitable habitat. No further actions are recommended for this species.
Mt. Tamalpais bristly jewel-flower	*Streptanthus glandulosus* ssp. *pulchellus*	CNPS 1B.2	Serpentinite soil/talus, chaparral, valley and foothill grassland. 150-800 m. Flowers May-July.	A	All known occurrences of this species in the vicinity of the BSA are associated with serpentine outcrops or openings. The BSA lacks suitable habitat. No further actions are recommended for this species.
Suisun Marsh aster	*Symphyotrichum lentum*	CNPS 1B.2	Brackish and freshwater marshes and swamps.0-3 m. Flowers May-November.	A	All known occurrences of this species in the vicinity of the BSA are found along wet sloughs and marshes. The BSA lacks suitable habitat. No further actions are recommended for this species.

Common Name	Scientific Name	Status	General Habitat Description	Habitat Present/ Absent	Rationale
Two fork clover	*Trifolium amoenum*	FE, CNPS 1B.1	Coastal bluff scrub, valley and foothill grassland (sometimes serpentinite), open sunny sites.5-415 m. Flowers April-June.	A	All known occurrences of this species in the vicinity of the BSA are found in open sunny sites in chaparral and grassland. The BSA does not have suitable habitat. This species was not observed during the field surveys, which were conducted during the flowering period. No further actions are recommended for this species.
Saline clover	*Trifolium hydrophilum (*syn. *Trifolium depauperatum var. hydrophilum)*	CNPS 1B.2	Marshes and swamps, valley and foothill grassland (mesic, alkaline), vernal pools. 0-300 m. Flowers April-June.	A	All known occurrences of this species in the vicinity of the BSA are associated with alkaline or saline wetlands. The BSA lacks suitable habitat. No further actions are recommended for this species.
San Francisco owl's-clover	*Triphysaria floribunda*	CNPS 1B.2	Coastal prairie, coastal scrub, valley and foothill grassland, generally serpentinite soil.10-160 m. Flowers April-June.	A	The BSA does not provide suitable habitat. This species was not observed during the field surveys, which were conducted during the flowering period. No further actions are recommended for this species.
Coastal triquetrella	*Triquetrella californica*	USFSS CNPS 1B.2	Coastal prairie, coastal scrub. Grows within 30 meters of the coast on gravelly rocky soil. 30-150 m. Flowers May-June.	A	Typically found close to the coast on gravel or rock. The BSA does not provide suitable habitat. No further actions are recommended for this species

Common Name	Scientific Name	Status	General Habitat Description	Habitat Present/ Absent	Rationale

* Key to status codes:

FE	Federal Endangered
FT	Federal Threatened
FD	Federal Delisted
FC	Federal Candidate
BCC	USFWS Birds of Conservation Concern
MMPA	Species protected under the Marine Mammal Protection Act
SC	State Candidate
SE	State Endangered
ST	State Threatened
SR	State Rare
SSC	CDFW Species of Special Concern
CFP	CDFW Fully Protected Animal
WBWG	Western Bat Working Group (High or Medium) Priority species
BLMS	Bureau of Land Management Sensitive Species
USFSS	U.S. Forest Service Sensitive Species
CNPS 1A	CNPS Rare Plant Rank 1A: Plants presumed extirpated in California and either rare or extinct elsewhere
CNPS 1B	CNPS Rare Plant Rank 1B: Plants rare, threatened, or endangered in California and elsewhere
CNPS 2A	CNPS Rare Plant Rank 2A: Plants presumed extirpated in California, but more common elsewhere
CNPS 2B	CNPS Rare Plant Rank 2B: Plants rare, threatened, or endangered in California, but more common elsewhere
CNPS 3	CNPS are Plant Rank 3: Plants about which more information is needed – a review list
CNPS 4	CNPS Rare Plant Rank 4: Plants of limited distribution – a watch list

CNPS Rare Plant Threat Ranks

0.1-Seriously threatened in California (over 80% of occurrences threatened / high degree and immediacy of threat)
0.2-Moderately threatened in California (20-80% occurrences threatened / moderate degree and immediacy of threat)
0.3-Not very threatened in California (<20% of occurrences threatened / low degree and immediacy of threat or no current threats known)

*Presence:
Absent [A] - no habitat present and no further work needed.
Habitat Present [HP] -habitat is, or may be present. The species may be present.
Present [P] - the species is present.
Critical Habitat [CH] - proposed project footprint is located within a designated critical habitat unit, but does not necessarily mean that appropriate habitat is *present.*

Chapter 4 – Results: Biological Resources, Discussion of Impacts and Mitigation

Habitats and Natural Communities of Special Concern

Habitats are considered to be of special concern based on (1) federal, state, or local laws regulating their development; (2) limited distributions; and/or (3) the habitat requirements of special-status plants or animals occurring on site. Two natural communities of special concern were found to be present in the BSA, Riparian Woodland and Perennial Stream (CWA "Other Waters"). These communities are summarized in Table 2, discussed below, and shown on the Biological Communities Map Figure 3a. The Perennial Stream "Other Waters" is also considered sensitive by federal and state agencies, due to the regulatory aspects discussed in more detail in Chapter 2, above and in the Jurisdictional Delineation Report.

Figure 3b shows the proposed project's impact areas. The following sections present a discussion of the impacts and mitigation for each natural community of special concern. Permanent impacts are a conversion of a natural community to structures such as, bridge support or to an area of engineered slope stabilization. Temporary impacts are disturbances to existing natural communities that would be restored to the same natural community type following construction (such as dewatering).

Table 2: Direct Impacts of the Proposed Project to Natural Communities of Special Concern.

Natural Community of Special Concern	Permanent Impacts	Temporary Impacts
Riparian Woodland	0 ft^2 (0 acre)	0 ft^2 (0 acre)
Perennial Stream "Other Waters"	0 ft^2 (0 acre)/ 0 linear feet	2,613 ft^2 (0.06 acre)/ 295 linear feet
Total	0 acre (0 ft^2)	2,613 ft^2 (0.06 acre)

Table 3: Direct Impacts of the Proposed Project to Jurisdictional Areas by Agency.

Agencies Jurisdiction	Permanent Impacts	Temporary Impacts
CDFW (creek bed and bank)	0 ft^2 (0 acre)	2,613 ft^2 (0.06 acre)
USACE and RWQCB (creek bed)	0 ft^2 (0 acre)	2,613 ft^2 (0.06 acre)

RIPARIAN WOODLAND

Riparian Woodland Survey Results

Vegetated plant communities in the BSA are comprised of Ruderal Disturbed/Developed, which is not a habitat of concern and Riparian Woodland, which is discussed here. An open canopy riparian woodland, loosely similar to Box-Elder Forest (*Acer Negundo* Forest Alliance) (G5, S2.2), follows a narrow route through the BSA (Figure 3a). The Box-Elder Forest's G5, S2.2 ranking indicates that it is a natural community of special concern (sensitive) at the state level, though more common in other regions. Within this habitat in the BSA, the primary overstory

species are box elder and white alder. Dense box elder shrubs are have colonized the bank that is north of the bridge. The herbaceous/vine layer is comprised mainly of English ivy and Himalayan blackberry, and scattered grasses and forbs including panic veldtgrass and miner's lettuce. Approximately 0.26 acre of Riparian Woodland is present in the BSA (Figure 3a).

Riparian Woodland Aoidance and Minimization Efforts

The following avoidance and minimization measures will be employed to avoid or minimize impacts to the greatest extent possible:

- Invasive plant species encountered within the work area will be removed, and soils within these areas will be stabilized using appropriate erosion control measures, as needed.
- Silt fencing or other approved sediment trapping will be installed down gradient of the work site to minimize off-site transport of sediments.
- Exclusion fencing will be installed along the limits of clearing and grubbing to prevent encroachment into undisturbed habitats.
- Trees in the work area will be protected with orange construction fencing.

Riparian Woodland Project Impacts

As summarized in Table 2 above, no permanent or temporary impacts to Riparian Woodland are anticipated to occur as a result of proposed project construction. No tree or vegetation trimming is anticipated to be needed for construction access.

Riparian Redwood Forest Compensatory Mitigation

No temporary impacts are anticipated to this natural community and no compensatory mitigation is required.

Riparian Redwood Forest Cumulative Impacts

No future public or private activities are known to be planned or reasonably foreseen for the BSA vicinity. Therefore, cumulative effects are not anticipated for this proposed project.

PERENNIAL STREAM ("OTHER WATERS")

PerennialStream ("Other Waters") Survey Results

<u>Perennial Stream ("Other Waters")</u>

The Perennial Stream Biological Community consists of the streambed, which is approximately 0.12 acre (310 linear feet) of "other waters". There are no wetlands in the BSA. Fairfax Creek is a perennial creek. Flows vary with the rainfall patterns of a given season. It is supported by a local watershed, generally, the western part of the Town of Fairfax and adjacent open space lands. The creek substrate is a mix of small gravel to larger cobble and rock. Indicators of the OHW mark include the slope change at the bed and earthen bank junction and wrack at the edge of the creek bed. The channel width at the OHW mark was used to determine the stream ("other waters") boundary shown on Figure 3a. The creek is not included on the National System of Wild and Scenic Rivers published by the U.S. Department of the Interior. There are

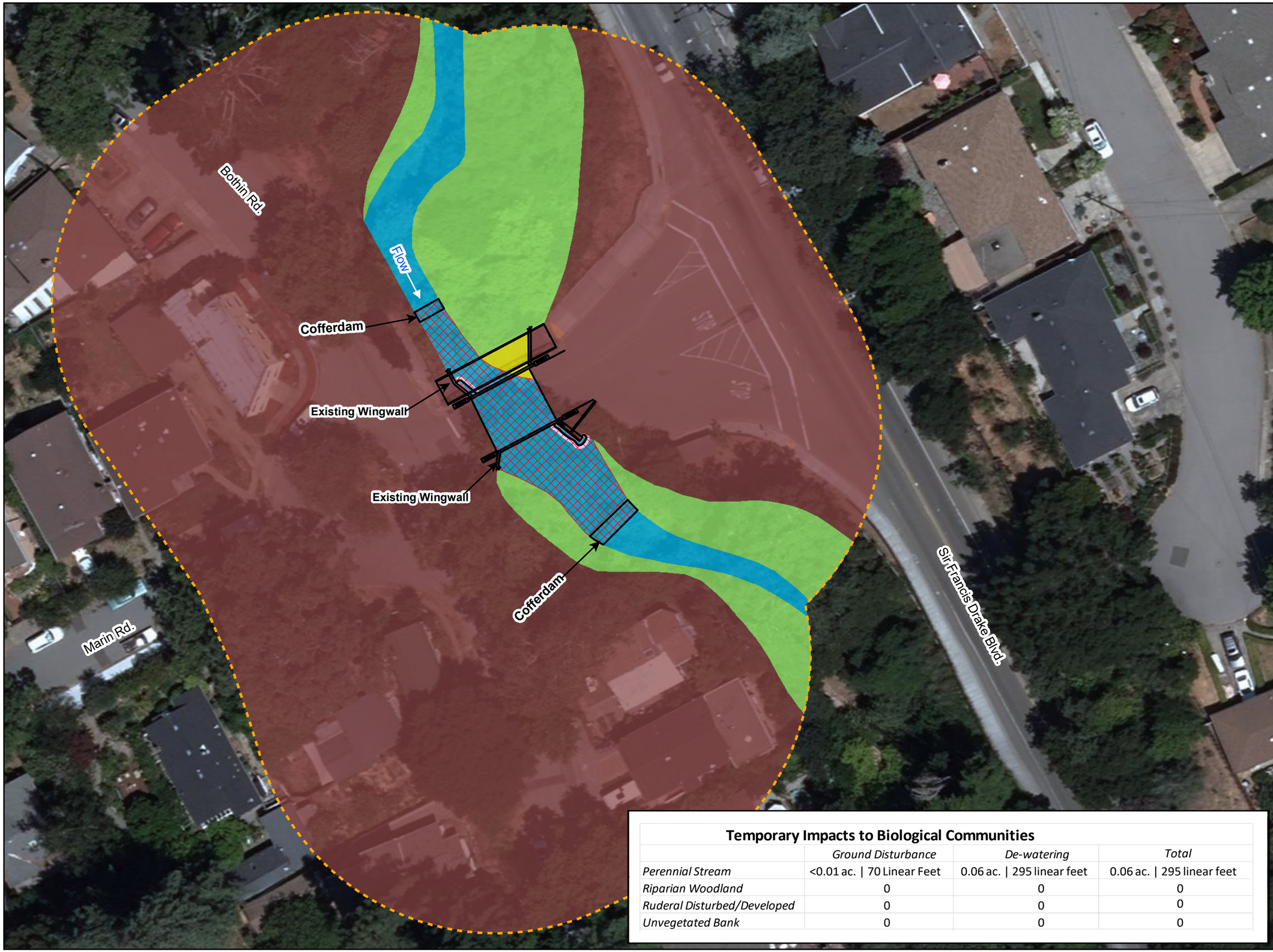

wra
ENVIRONMENTAL CONSULTANTS

Bridge Preventative Maintenance Program

Town of Fairfax, California

Figure 3b.

Marin Road Bridge Effects to Biological Communities

Biological Study Area - 2.14 ac.

Temporary Impacts

Ground Disturbance (<0.01 ac.)

De-watering (0.06 ac.)

Biological Communities

Perennial Stream (0.12 ac.)

Riparian Woodland (0.26 ac.)

Ruderal disturbed/Developed (1.76 ac.)

Unvegetated bank (<0.01 ac.)

N W E S

0 20 40 80
Feet

Temporary Impacts to Biological Communities

	Ground Disturbance	*De-watering*	*Total*
Perennial Stream	<0.01 ac. | 70 Linear Feet	0.06 ac. | 295 linear feet	0.06 ac. | 295 linear feet
Riparian Woodland	0	0	0
Ruderal Disturbed/Developed	0	0	0
Unvegetated Bank	0	0	0

Map Date: March 2016
Map By: smortensen
Base Source: Esri Stream - Marin County 2014

Path: L:\Acad 2000 Files\22000\22304\GIS\ArcMap\BPMP\Marin Road Bridge\2017\Fig3b_Marin_Effects_20170622.mxd

This page intentionally left blank

no wetlands in the BSA. The bridge has a concrete headwall and sidewalls, as well as wingwalls at the upstream and downstream banks. Just upstream of the bridge there is a concrete retaining wall along the base of the northwest bank. The remaining banks adjacent to the bridge are earthen.

Pursuant to the Clean Water Act Section 404 and 401, the creek below OHW would be within the USACE and RWCQB jurisdiction. It would also be protected by Porter Cologne (RWQCB). There are no areas in the BSA that would be considered only Waters of the State (not Waters of the US).

Perennnial Stream Avoidance and Minimization Efforts

The following measures are included to avoid and/or minimize and restore potential impacts to creek habitat resulting from the use of mechanical equipment in the creek bed.

- The primary construction will be completed during the dry season, between April 15 and October 15.
- Final grading in the creek bed will conform to the existing creek channel both downstream and upstream (except in the areas of permanent fill), and existing bed materials will be replaced with similar sized materials.
- Regulatory approval will be obtained for all work within potential jurisdictional areas, including approval from the USACE, RWQCB, CDFW, and NMFS. All work within these areas will conform to any conditions imposed by the regulating agencies.
- Prior to any clearing, grubbing, pruning, or groundbreaking activity, the limits of construction will be fenced with temporary high-visibility construction fencing to protect environmentally sensitive areas, to prevent any equipment from unnecessarily extending the work area or entering the wetted channel. In addition, silt fencing will be installed at the base of the construction fencing, or where appropriate, to prevent debris from entering the creek. All fencing will be removed upon project completion.
- Prior to construction, the contractor will be required to prepare an Accidental Spill Prevention and Cleanup Plan. This plan would include required spill control absorbent material, for use beneath stationary equipment, to be present on-site and available at all times.
- To minimize fluid leaks during operation, refueling, and maintenance of stationary equipment spill control absorbent material will be in place underneath this equipment at all times to capture potential leaks. All refueling and maintenance of equipment, other than stationary equipment, will occur outside the creek's top-of-bank. Any hazardous chemical spills will be cleaned immediately.
- All stockpiling of construction materials, equipment, and supplies, including storage of chemicals, refueling and maintenance, will occur outside the creek channel. No equipment will be washed where runoff could enter the creek.
- No motorized equipment is to be left within the channel (top of bank to top of bank) overnight, unless a container or similar method is securely placed beneath the equipment to catch any fluid leakage. All contained fluids will be disposed of in a permitted manner.
- The contractor will be required to use a drilling mud and slurry seal that is nontoxic to aquatic life if there are drilling activities related to construction of the proposed project. All drilling muds and fluid will be contained on-site in tanks and disposed of in a permitted manner. Fluids from saw cutting and other activities will be collected and not allowed to flow into the creek.

- No equipment, including concrete trucks, will be washed within the channel of the creek, or where wash water could flow into the channel. Prior to proposed project construction, the contractor will establish a concrete washout area for concrete trucks in a location where wash water will not enter the creek or adjacent areas. The washout area will follow the practices outlined in the San Francisco Bay Regional Water Quality Control Board Erosion and Sediment Control Field Manual (page 107-108, July 1999) or more recent guidelines. Substitution of the designated concrete washout area or methods will require prior approval of the Town of Fairfax.
- All water that comes in contact with wet concrete must be pumped directly into tanks and disposed of at a permitted location.
- If work is to occur on the roadway and bridge approaches during the period October 15 to April 15, all drainage inlets within the proposed project site will be protected from receiving polluted storm water through the use of filters such as fabrics, gravel bags, straw wattles, or other appropriate BMPs.
- Water encountered during construction of the bridge foundations or footings will be managed in accordance with an approved dewatering plan.
- All workers will ensure that food scraps, paper wrappers, food containers, cans, bottles, and other trash from the BSA are deposited in covered or closed trash containers. The trash containers will not be left open and unattended overnight.
- The Town of Fairfax will require that all disturbed areas in the stream channel be re-graded to match the surrounding topography by October 15. Seed and certified weed-free straw will be placed on disturbed areas in the proposed project site (with the exception of the lower creek banks, creek bed, and areas below the OHW mark). A jute mesh type or equivalent matting will be placed over the straw, installed per the manufacturer's instructions. This matting will have no plastic incorporated into it. Substitution of materials or erosion control methods will require prior approval of the Town of Fairfax.
- After construction, the proposed project site will be inspected following the first heavy rain, during the middle of the rainy season and at the end of the rainy season. During each visit areas of significant erosion or erosion control device failure will be noted and appropriate remedial actions taken.

With the implementation of these measures, it is expected that the proposed project will not result in substantial adverse impacts to creek habitat.

Project Impacts

As summarized in Table 2 above, no permanent impacts are anticipated; however, 2,613 square feet (0.06 acre, approximately 295 linear feet) of temporary impacts to potentially jurisdictional "other waters" (creek bed) are proposed.

Temporary, direct impacts to the creek would occur as a result of temporary trenching within the creek bed for wingwall repair and during dewatering. A pool is present at the southwest wingwall which will require dewatering prior to work in this area. In addition, dependent upon on the amount of surface water present during construction, cofferdams and a temporary stream diversion may be needed to isolate the work area. If surface water is limited to the immediate vicinity of each wingwall, then cofferdams will not be necessary; if the surface water extends upstream or downstream, then cofferdams would be required. Temporary direct impacts in association with trenching and ground disturbance activities are limited to less than 436 square feet (0.01 acre, approximately 70 linear feet) of creek bed.

Temporary, indirect impacts may occur if construction-related sediment enters creeks within the BSA. However, implementation of construction BMPs described above would ensure such impacts are avoided.

Perennial Stream Compensatory Mitigation

No permanent impacts are anticipated. Hence, compensatory mitigation is not required.

Cumulative Impacts

No future public or private activities are known to be planned or reasonably foreseen for the BSA vicinity. The proposed project would result in minimal permanent changes to the creek bed. Therefore, cumulative effects are not anticipated for this project.

Special-Status Plant Species

Based upon a review of the resources and databases discussed in Section 2, 69 special-status plant species have been documented in the vicinity of the BSA. No critical habitat for special-status plants exists within the proposed project area. Table 1 discusses the potential for each of the special-status plant species to occur in the BSA. Those special-status plant species documented in CNDDB within 5 kilometers (3 miles) of the BSA are shown in Figure 4 (CDFW 2017a). Suitable habitat is present in the BSA for five of the species. Key points regarding those species are summarized here.

- Napa false indigo (*Amorpha californica* var. *napensis,* CNPS 1B.2). Upland habitat within the BSA could support this species. However, it may be too mesic in some areas and too disturbed other areas. This shrub species, which is easily identifiable, was not observed during the field surveys.

- Western leatherwood (*Dirca occidentalis,* CNPS 1B.2). The upland portion of the Riparian Woodland habitat within the BSA could support this species. However, it may be too mesic in some areas and too disturbed other areas. This shrub species, which is easily identifiable, was not observed during the field surveys.

- Marin checker lily (*Fritillaria lanceolata* var*. tristulis,* CNPS 1B.1). Though not coastal, there is riparian habitat within the BSA. No *Fritillaria* (a perennial bulbiferous herb) were observed during the field surveys, which were conducted during the flowering period.

- Thin-lobed horkelia (*Horkelia tenuiloba,* CNPS 1B.2, BLMS). Limited poor quality, disturbed habitat present. No *Horkelia* were observed during the field surveys, which were conducted during the flowering period.

- Tamalpais oak (*Quercus parvula* var. *tamalpaisensis,* CNPS 1B.3). Though, uplands in the BSA provides potential habitat, this species is a woody shrub, which would have been identifiable during the site visits. No shrub oaks were observed during the field surveys.

The remaining special-status plant species documented in the vicinity are unlikely to occur in the BSA due to lack of suitable habitats (such as coastal dunes, coastal prairie, coastal salt marsh or vernal pools) or specific substrates (i.e. serpentine, volcanic rock). The BSA is in a residential area, with structures (houses, sheds, etc.), fenced backyards, and landscape areas nearby. There are a few dense patches of English ivy and Himalayan blackberry. The areas that are not vegetated, are bare dirt, rock, or duff. The creek bed is generally unvegetated.

No special-status plant species were observed in the BSA during floristic surveys completed during the appropriate flowering periods. No effects on special-status plant species are anticipated and no further discussion of special-status plant species is necessary.

Special-Status Wildlife Species

Ninety-five special-status wildlife species have been documented in the background literature as potentially occurring in the quadrangles or noted in a review of other resources as having overlapping ranges and habitat requirements (Table 1 and Appendix C). Nine of these special-status wildlife species have been documented in CNDDB within 5 kilometers (3 miles) of the BSA (Figure 5; CDFW 2017a).

Fairfax Creek is a tributary of San Anselmo Creek which currently supports an annual run of steelhead. However, a total barrier exists at the downstream end of Fairfax Creek before the confluence with San Anselmo Creek. A concrete box culvert located at Bolinas Avenue terminates at a vertical drop of approximately 4 feet, and has an overall length of 458 feet with a slope of 0.94 percent (Ross Taylor and Associates 2006). An assessment of the culvert concluded that adult steelhead, and resident rainbow trout have a zero percent chance of passing the barrier because of the vertical drop height, length, and slope of the culvert (Ross Taylor and Associates 2006). In addition, historical records have documented an absence of steelhead in Fairfax Creek since about 1960 (Leidy et al. 2005). The proposed project will have no effect on steelhead.

Fairfax Creek is designated as EFH for Pacific Salmonids including Coho and Chinook salmon. Coho salmon are considered extirpated from San Francisco Bay and all of its tributaries, thus they will not be affected by the proposed project (NMFS 2012). Fairfax Creek is outside of the known range for Chinook salmon, thus they will not be affected by the proposed project (UC Davis 2016). Although these species have no potential to occur within the BSA, EFH is still present and may be temporarily affected by the proposed Project. Following the implementation of avoidance and minimization measures outlined in the section below, the proposed project is anticipated to have no permanent adverse effect on EFH.

Northern spotted owls (*Strix occidentalis caurina*), a Federal threatened and State threatened species, are documented within 0.5 mile of the BSA. However, northern spotted owls require undisturbed forests for foraging and nesting. The preferred forest types including fir or other coniferous trees are not present within or adjacent to the BSA. Typical disturbance buffers for northern spotted owl are 0.25 mile. The nearest potential nesting habitat and nearest documented occurrences are both greater than 0.25 mile from the BSA; therefore, the proposed project is not anticipated to disturb northern spotted owl nesting in the region. The absence of fir and redwood forest within the BSA, distance to suitable habitat, and baseline levels of anthropogenic disturbance from surrounding residential development reduce the potential for northern spotted owl to be present near the BSA or for spotted owls to be disturbed by proposed project activities. In addition, no trees are to be removed by the proposed project. Therefore, the proposed project will have no effect on northern spotted owl.

Of the 95 special-status wildlife species documented to occur in the vicinity, five species have potential to occur within the BSA. The remaining 90 species identified in Table 1 are unlikely to occur within the BSA because of existing conditions within and surrounding the BSA. Roadways, residential development, creek channelization, and various anthropogenic disturbances reduce the amount of available breeding, rearing, and foraging habitat for most special-status species. Several habitat types or habitat conditions which are required to support special-status wildlife species are also absent from the BSA, such as marsh, open grassland, woodland riparian, and serpentine habitats.

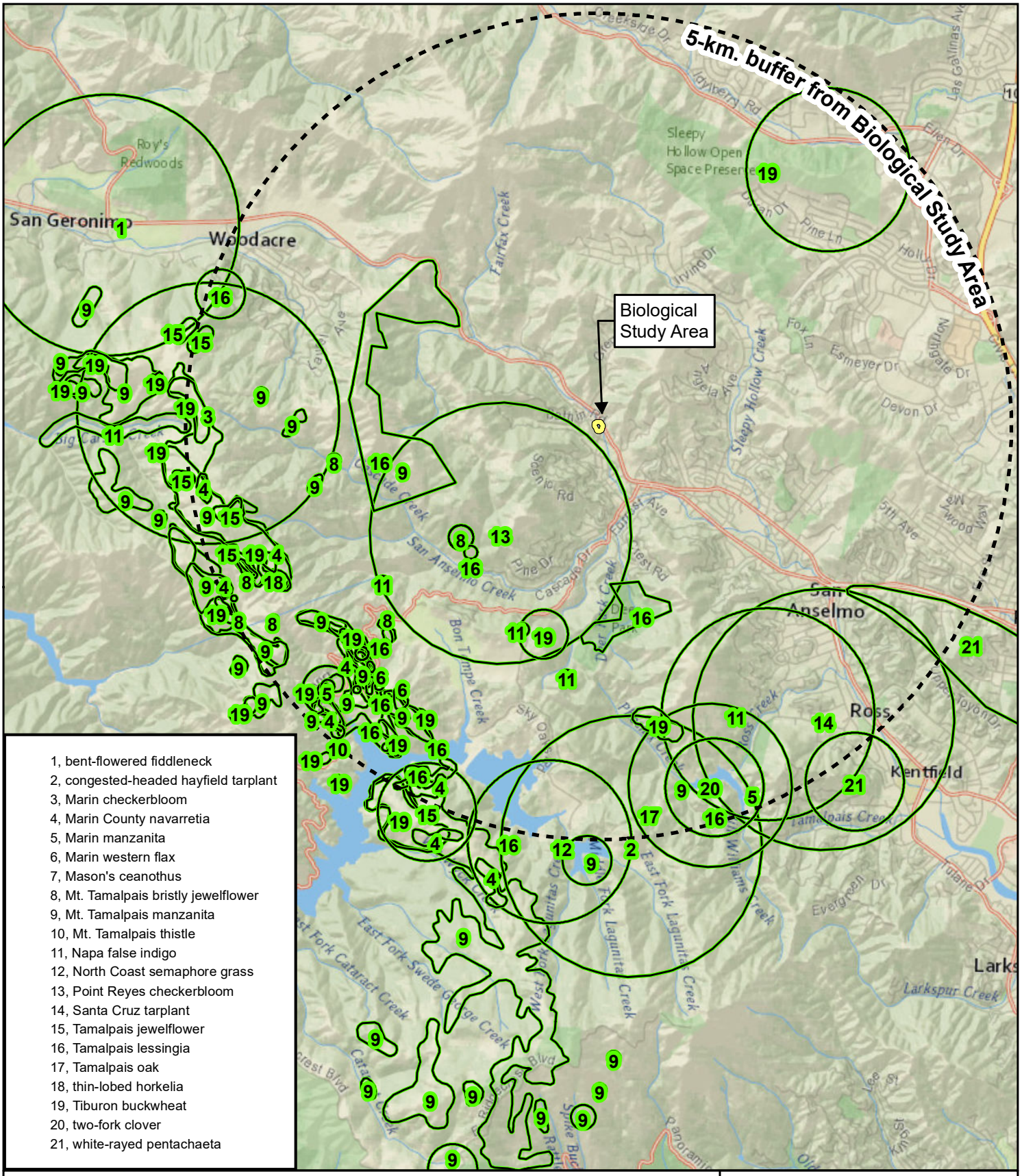

Figure 4. Special-status Plant Species Occurrences within 5 Kilometers of the Biological Study Area

Bridge Preventative Maintenance Program
Marin Road Bridge NES
Marin County, California

0 0.5 1
Miles

ENVIRONMENTAL CONSULTANTS

Map Prepared Date: 4/28/2017
Map Prepared By: smortensen
Base Source: Esri Streaming - National Geographic
Data Source(s): WRA, CNDDB Apr2017

Path: L:\Acad 2000 Files\22000\22304\GIS\ArcMap\BPMP\Marin Road Bridge\2017\Fig4_Marin_CNDDB_Plants_20170427.mxd

This page intentionally left blank

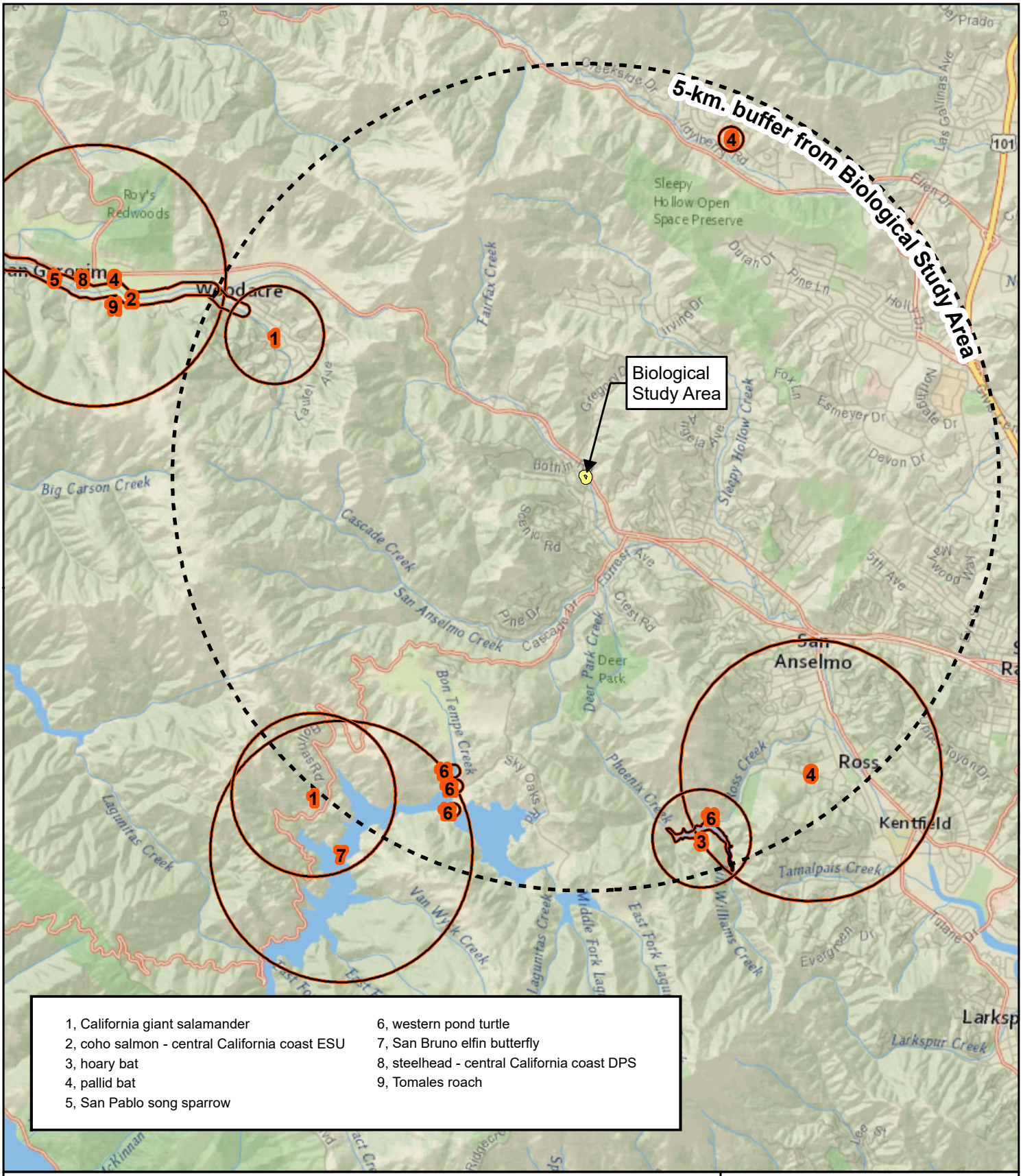

Figure 5. Special-status Wildlife Species Occurrences within 5 Kilometers of the Biological Study Area

Bridge Preventative Maintenance Program
Marin Road Bridge NES
Marin County, California

0 0.5 1
Miles

ENVIRONMENTAL CONSULTANTS

Map Prepared Date: 4/28/2017
Map Prepared By: smortensen
Base Source: Esri Streaming - National Geographic
Data Source(s): WRA, CNDDB Apr2017

Path: L:\Acad 2000 Files\22000\22304\GIS\ArcMap\BPMP\Marin Road Bridge\2017\Fig5_Marin_CNDDB_Wildlife_20170427.mxd

This page intentionally left blank

Trees within the BSA are primarily California bay which do not provide cavities or complex foliage required to support tree roosting bats. The underside of the bridge structure is also solid with no gaps, openings, or seams which could potentially be used by roosting bats. The BSA also receives a high level of human disturbance from the residences and traffic in the vicinity further reducing the potential for special-status bat species such as Townsend's big-eared bat (*Corynorhinus townsendii*) to occur within the BSA. This species is highly sensitive to disturbance at roost sites. The absence of roost sites and other habitat features within the BSA makes the presence of special-status bats or other bat species unlikely. Additionally, no trees are anticipated to be removed for the project. Therefore, the project will have no effect on roosting bats.

Special-status amphibian and reptile species such as California giant salamander (*Dicamptodon ensatus*), foothill yellow-legged frog (*Rana boylii*), California red-legged frog (*Rana draytonii*), and Pacific pond turtle (*Actinemys marmorata*) are also unlikely to occur. Fairfax Creek within the BSA is highly modified with wingwalls, abutments, and retaining walls with minimal natural bank substrate. No occurrences of these species have been documented within the watershed, and California red-legged frog is not known within this portion of Marin County nor has it been documented within 5 miles of the BSA (CDFW 2017a). Nearby occurrences of foothill yellow-legged frog and Pacific pond turtle are located in different watersheds than the BSA and greater than 1.5 miles from the BSA (CDFW 2017a). In addition, the BSA lacks suitable pool habitat and has too high flows during the breeding season to support foothill yellow-legged frog or California giant salamander; therefore, the BSA does not contain suitable breeding habitat for these species. The BSA also lacks suitable basking and upland habitats for Pacific pond turtle. The lack of nearby occurrences, connectivity with occupied habitats, or suitable habitat within the BSA make it unlikely that special-status amphibian and reptile species will occur within the BSA; thus, the proposed project will have no effect on California giant salamander, foothill yellow-legged frog, California red-legged frog, or Pacific pond turtle.

Based on the habitat conditions present on the BSA and documented range and occurrence information for special-status wildlife species (CDFW 2017a and 2017b), it was determined that the BSA contains potential habitat for five other special-status or protected wildlife species including: Allen's hummingbird (*Selasphorus sasin*), purple martin (*Progne subis*), olive-sided flycatcher (*Contopus cooperi*), oak titmouse (*Baeolophus inornatus*), and Nuttall's woodpecker (*Picoides nuttallii*). The BSA also has potential to support non-special-status nesting birds. These species and their potential for occurrence in the BSA are discussed in further detail below.

EFH AND FISH PASSAGE

The Magnuson-Stevens Fishery Conservation and Management Act requires all fishery management councils to describe and identify EFH defined as the "waters and substrate necessary to fish for spawning, breeding, feeding, or growth to maturity." This may include historic ranges and habitats used by fish which are not currently occupied. The Pacific Coast Salmon Fishery Management Council identified EFH for the Pacific Salmon Fishery and defined the geographic extent of freshwater EFH as all water bodies currently or historically occupied by the managed salmon stocks which can be above man-made barriers to anadromy (PFMC 2014). Freshwater EFH for salmonids includes spawning and incubation, juvenile rearing, juvenile migration corridors, and adult migration corridors and holding habitats.

Survey Results

The BSA is designated as EFH for Pacific Salmonids, and Fairfax Creek within the BSA is primarily slow riffle habitat with substrate composed of gravels and cobble. During the November 2014 site visit, depths of the creek averaged approximately 3-5 inches and widths

varied from 2-10 feet. Channel slope in the BSA is gradual with shallow pools present. Additionally, deeper pools are present at the upstream and downstream end of the BSA, greater than 50 feet from the proposed project impacts and footprint. Pool habitat above and below the BSA was approximately 12-30 inches deep at the time of the site visit. No impediments to fish passage such as plunge pools, culverts, structures or large substrate were present within the BSA. These conditions are suitable to support native fish and could support steelhead if the species were present.

The 458-foot concrete box culvert located at Bolinas Avenue represents a total barrier preventing Fairfax Creek from currently supporting anadromy or salmonids. The combination of vertical drop height, length, and slope of the culvert, make passage through the culvert by steelhead unlikely (Ross Taylor and Associates 2006).

Fish passage downstream of the BSA in San Anselmo Creek has been improved in recent years with the retrofit of the Center Avenue box culvert in 2012 (CEMAR 2012). However, the concrete box culvert at Bolinas Avenue on Fairfax Creek represents a total barrier to anadromy. It should be noted that as part of the 2006 assessment of barriers in the Corte Madera Creek watershed, options to retrofit or replace the Bolinas Avenue culvert were discussed within the report (Ross Taylor and Associates 2006). Because this barrier represents the primary obstruction preventing a run of steelhead on Fairfax Creek, and plans have been discussed for the removal or retrofit of this barrier, it is possible that an annual steelhead run will return to Fairfax Creek in the near future. Therefore, informal consultation with NMFS will be initiated to ensure EFH is not impacted by the proposed project.

Avoidance and Minimization

Habitat in the BSA is designated as EFH for Pacific salmonids, although anadromous fish including salmonids cannot currently access Fairfax Creek. In addition to the measures identified for the Perennial Stream Biological Community; the following measures will be implemented to avoid and minimize potential project impacts to EFH.

- Informal consultation with NMFS will be conducted to ensure proposed project design will not result in permanent adverse effects to fish passage or EFH.
- Work within the channel will be conducted during the dry season (June 1 through October 31). Work outside of this period will require consultation with NMFS.
- Work will be conducted in isolation from flowing water. Prior to the start of construction activities, the work area will be isolated, and flowing water should be diverted around the isolated area.
- A fish rescue plan will be developed prior to the onset of any in-channel work if water is present. The plan will be implemented by a qualified biologist during dewatering activities in Fairfax Creek. The fish rescue plan will include an overview of the proposed methods for dewatering, expected location and duration of dewatering activities, and methods for conducting fish rescue during dewatering activities.
- Concrete, dust, and other debris from concrete removal activities will be captured and removed from the work site so as not to enter the creek channel.
- The creek banks will be restored to pre-project conditions following the completion of work.
- The creek channel will be restored to the original grade using native cobble, gravel, and soils in appropriate ratios to mimic pre-project conditions.

Project Impacts

As summarized in Table 2 above, 2,613 square feet (0.06 acre, approximately 295 linear feet) of temporary impacts to EFH are anticipated. No permanent loss of Perennial Stream habitat is anticipated from the proposed project. Temporary, direct impacts to the creek will occur as a result of trenching to stabilize wingwalls and is limited to less than 435.6 square feet (0.01 acre, approximately 70 linear feet) of creekbed. Additional Temporary direct impacts may occur for dewatering to allow equipment access to the wingwalls and their footings for repairs. A maximum of 2,613 square feet (0.06 acre, approximately 295 linear feet) of temporary direct impacts may occur from dewatering activities. No barriers to fish passage will be constructed and no new additions to the bridge which may re-route flows are expected.

The proposed project will result in temporary impacts to EFH; however, no permanent adverse impacts are anticipated. The project is scheduled during the dry season when fish are least likely to be present. The bridge work will add material to the existing riprap but will not create a barrier across the channel, decrease flows, change substrate size, or channelize the stream. Riprap will be placed within existing riprap to prevent further erosion of the banks. The stream channel and banks will be restored to near pre-project conditions following the completion of bridge work, recreating the gradient which currently exists. Restoration will use previously excavated cobble and gravel substrate to mimic the channel conditions prior to excavation including creek gradient. As such, the project will not change fish passage conditions and will not impact fish passage should special-status fish runs return to Fairfax Creek.

The proposed project will not result in any changes to existing land use; and the BSA will be restored to conditions similar to those before the project. Therefore, no indirect impacts are expected.

The proposed project will not result in loss of habitat to the physical and biological properties of EFH. Therefore, the proposed project **may affect, but is not likely to adversely affect** EFH.

Cumulative Impacts

No cumulative effects are anticipated from the proposed project. Downstream fish passage improvements have been recently made at the Center Avenue box culvert and future improvements to the Bolinas Avenue culvert are expected (FOCMCW 2016). The improvement of this structure will remove the fish passage barrier which currently precludes anadromy in Fairfax Creek. If this were to occur, Fairfax Creek may support a steelhead run. The proposed project will restore the BSA to near pre-project conditions and not result in changes to fish passage within the BSA. Restoration to near pre-project conditions will ensure that no barriers are created to fish passage during proposed project activities, and any improvements to downstream fish passage will not be hindered by the proposed project, and no cumulative effects are anticipated.

SPECIAL-STATUS AND NON-SPECIAL-STATUS NESTING BIRDS

Five special-status species of birds including: Allen's hummingbird, purple martin, olive-sided flycatcher, oak titmouse and Nuttall's woodpecker, have potential to nest within or adjacent to the BSA. A brief discussion on these species is provided below. In addition to the special-status bird species, non-special-status birds have the potential to nest within the BSA. Most native birds in the United States, including non-status species, are protected by the Federal Migratory Bird Treaty Act of 1918 and California Fish and Game Code. Under these legislations, destroying active nests, eggs, or young is illegal.

- Allen's hummingbird (*Selasphorus sasin*, USFWS Bird of Conservation Concern). Allen's hummingbird, common in many portions of its range, is a summer resident along the majority of California's coast and a year-round resident in portions of coastal southern California and the Channel Islands. Breeding occurs in association with the coastal fog belt, and typical habitats used include coastal scrub, riparian, woodland and forest edges, and eucalyptus and cypress groves (Mitchell 2000). It feeds on nectar, as well as insects and spiders.

- Purple martin (*Progne subis*, CDFW Species of Special Concern). The purple martin is an uncommon summer resident in California, occurring in woodlands and low-elevation hardwood and coniferous forest. It usually feeds on insects captured in flight 100-200 feet above ground. The purple martin nests in cavities often located in tall, isolated trees or snags in open forest or woodland.

- Olive-sided flycatcher (*Contopus cooperi*, CDFW Species of Special Concern, USFWS Bird of Conservation Concern). This species if found within the coniferous forest biome, most often associated with forest openings, forest edges near natural openings (e.g. meadows, canyons, or rivers) or human-made openings (e.g., harvest units), or open to semi-open forest stands (Altman, 2000).

- Oak titmouse (*Baeolophus inornatus*, USFWS Bird of Conservation Concern). This relatively common species is year-round resident throughout much of California including most of the coastal slope, the Central Valley and the western Sierra Nevada foothills. Its primary habitat is woodland dominated by oaks. Local populations have adapted to woodlands of pines and/or junipers in some areas (Cicero 2000). The oak titmouse nests in tree cavities, usually natural cavities or those excavated by woodpeckers, though they may partially excavate their own (Cicero 2000). Seeds and arboreal invertebrates make up the birds' diet.

- Nuttall's woodpecker (*Picoides nuttallii*, USFWS Bird of Conservation Concern). Nuttall's Woodpecker, common in much of its range, is a year-round resident throughout most of California west of the Sierra Nevada. Typical habitat is oak or mixed woodland, and riparian areas (Lowther 2000). Nesting occurs in tree cavities, principally those of oaks and larger riparian trees. Nuttall's woodpecker also occurs in older residential settings and orchards where trees provide suitable foraging and nesting habitat. This species forages on a variety of arboreal invertebrates.

Survey Results

Trees and vegetation within and surrounding the BSA may provide potential nest sites or foraging habitat for Allen's hummingbird, purple martin, olive-sided flycatcher, oak titmouse, and Nuttall's woodpecker, and for non-special-status bird species. In addition, the bridge structure and low lying brush may support non-special-status bird nesting.

Avoidance and Minimization

Although potential nesting habitat for nesting birds would not be lost as a result of the proposed project, construction could disturb active nests. The following measures will be implemented to avoid and minimize potential impacts to special-status and non-special-status nesting birds:

- If proposed project activities begin between February 15 and August 15, pre-construction surveys will be conducted by a qualified biologist prior to ground disturbance or vegetation removal to determine whether active nests containing eggs, chicks, or young are present in the BSA. Pre-construction surveys for active nests will be conducted no more than 14 days prior to ground disturbing or vegetation removal activities.
- If active nests containing eggs, chicks, or young are not observed during pre-construction surveys, construction can proceed.
- If active nests containing eggs, chicks, or young are observed, ground-disturbing activities will be avoided within a 25- to 100-foot exclusion zone for passerine birds and a 200- to 500-foot exclusion zone for raptors and special-status species. Exclusion size will be dependent upon species and nest location. Appropriate exclusion distances will be determined by a qualified biologist based on the species present and location of the nest relative to construction activities (e.g., the nest is sufficiently shielded from construction to avoid disturbance). Construction within this buffer will be prohibited until the qualified biologist determines that the nest is no longer active. If an active nest is found after the completion of the pre-construction surveys or after construction begins, all construction activities will stop until a qualified biologist has evaluated the nest and determined an appropriate buffer to be placed around the nest. If avoidance of a buffer zone is not feasible, CDFW and/or the USFWS will be contacted to coordinate an appropriate course of action.
- No surveys will be required if project activities begin during the non-nesting season, August 16 and February 14.

Project Impacts

The BSA contains potential nesting habitat for special-status and non-special-status nesting birds. Although this habitat would not be lost as a result of the proposed project, construction activities could result in direct impacts to active nests, and construction noise could result in indirect impacts to active nests. No trees are anticipated to be removed, and the BSA will be restored to pre-project conditions, and as such, no permanent direct effects to nesting birds are expected.

The proposed project will not result in any changes to existing land use and the BSA will be restored to pre-project conditions; therefore, no indirect effects are expected.

Cumulative Impacts

No future public or private activities are known to be planned or reasonably foreseen for the BSA. The proposed project does not include any additional activities beyond those discussed in this document. Therefore, cumulative effects on special-status and non-special-status nesting birds are not anticipated for the proposed project.

Chapter 5 – Conclusions and Regulatory Determinations

Federal Endangered Species Act Consultation Summary

There has been no federal Endangered Species Act Section 7 consultation to date with the USFWS and/or NMFS. The proposed project is anticipated to have no effect on steelhead as they are currently precluded from the BSA. However, the barrier at Bolinas Avenue may be removed or modified in the near future, and this would reestablish anadromy to Fairfax Creek. A technical assist or informal consultation with NMFS is recommended to assess proposed project effects and ensure no adverse effects occur to fish passage. A Biological Assessment and a request for letter of concurrence will be submitted to NMFS as part of the consultation process.

The project is anticipated to have no effect on northern spotted owl, a federally threatened species, or its habitat; therefore, no consultation is necessary with USFWS. Coho salmon are considered extirpated from San Francisco Bay (NMFS 2012, Brown and Moyle 1991); therefore, the project will have no effect on Coho salmon and consultation is not required.

Essential Fish Habitat Consultation Summary

Although no species covered under EFH are anticipated to occur, the BSA contains habitat identified as Pacific Salmon EFH. No loss of habitat function or value is anticipated from the proposed project. The proposed project is not anticipated to adversely modify EFH and no permanent project impacts are anticipated. Temporary impacts to EFH will occur during de-watering for work in the creek. Informal consultation with NMFS is recommended to assess effects, avoidance and minimization measures used to reduce impacts to EFH, and a review of the proposed project design for fish passage consideration. A Biological Assessment and a request for letter of concurrence will be submitted to NMFS as part of the consultation process.

California Endangered Species Act Consultation Summary

California state-listed species do not have potential to occur within the BSA. No take of state-listed or candidate species is anticipated to occur during the proposed project; therefore, consultation in relation to the California Endangered Species Act is not necessary for the proposed project.

Wetlands and Other Waters Coordination Summary

As summarized in Table 2 above, no permanent impacts and 2,613 square feet (0.06 acre, approximately 295 linear feet) of temporary impacts to potential jurisdictional “other waters” (creek bed) are proposed. A preliminary Jurisdictional Determination will be submitted to the USACE for verification. The permits that will be required include a Streambed Alteration Agreement (CDFW), CWA 401 certification (RWQCB), and CWA 404 Nationwide Permit 3 (Maintenance) or 14 (Linear Transportation Projects) (USACE).

Invasive Species

With implementation of the avoidance and minimization efforts in Section 3, the proposed project would not result in severe infestations of invasive plant species or spread of the New Zealand mud snail.

Other

Migratory Bird Treaty Act and California Fish and Game Code. Although potential nesting habitat for nesting birds would not be lost as a result of the project, construction could result in temporary impacts if active nests are disturbed. Measures including preconstruction surveys and establishment of buffers if active nests are found will ensure that the project will not affect nesting birds.

Chapter 6 – References

Altman, B., and R. Sallabanks. 2000. Olive-sided Flycatcher (*Contopus cooperi*). In The Birds of North America, No. 502 (A. Poole and F. Gill, Ed.). The Birds of North America, Inc., Philadelphia, PA.

Baldwin, B.G., D.H. Goldman, D.J Keil, R. Patterson, T.J. Rosatti, and D.H. Wilken (Eds.). 2012. The Jepson Manual: Vascular Plants of California, second edition. University of California Press, Berkeley, CA.

Brown, L. R., and P. B. Moyle. 1991. Status of Coho Salmon in California. Report to National Marine Fisheries. UC Davis, Department of Wildlife and Fisheries Biology: 131 p.

CDFG. 1994. A Field Guide to Lake and Streambed Alteration Agreements, Sections 1600-1607, California Fish and Game Code. Environmental Services Division, Sacramento, CA.

CDFG. 2009. List of California Vegetation Alliances. Biogeographic Data Branch. Vegetation Classification and Mapping Program, Sacramento, CA.

CDFG. 2003. List of California Terrestrial Natural Communities Recognized by the California Natural Diversity Database Wildlife and Habitat Data Analysis Branch. Vegetation Classification and Mapping Program, Sacramento, CA.

CDFW. 2017a. California Natural Diversity Database (CNDDB). Wildlife and Habitat Data Analysis Branch, Sacramento, CA.

CDFW. 2017b. Spotted Owl Database, Wildlife and Habitat Data Analysis Branch. Sacramento. Accessed: June.

CDFW 2017c. California Wildlife Habitat Relationships System online database. Online at: http://www.dfg.ca.gov/biogeodata/cwhr/; accessed March.

CDFW 2017d. California Passage Assessment Database. Online at: https://nrm.dfg.ca.gov/PAD/; accessed March.

California Invasive Plant Council (Cal-IPC). 2017. California Invasive Plant Inventory Database. California Invasive Plant Council, Berkeley, CA. Online at: http://www.cal-ipc.org/ip/inventory/index.php; most recently accessed: January.

California Invasive Species Council. 2017. http://www.iscc.ca.gov/ most recently accessed: May.

California Native Plant Society (CNPS). 2017. Inventory of Rare and Endangered Plants of California. CNPS, Sacramento, California. Online at: http://www.rareplants.cnps.org; most recently accessed: January.

Center for Ecosystem Management and Restoration (CEMAR). 2012. Estuary Improvement Program. San Anselmo Creek, Center Boulevard Fish Passage Design.

Chow, N. 2001. Distribution and Habitat Associations of Northern Spotted Owls in Marin County, California. M.S. Thesis, Humboldt State University.

Cicero, C. 2000. Oak Titmouse (*Baeolophus inornatus*), The Birds of North America Online (A. Poole, Ed.). Ithaca: Cornell Lab of Ornithology; Retrieved from the Birds of North America Online: http://bna.birds.cornell.edu/bna/species/485a

eBird. 2017. Audubon and Cornell Lab of Ornithology. Online at: http://ebird.org/ebird/map/; accessed March.

Environmental Laboratory. 1987. Corps of Engineers Wetlands Delineation Manual. Department of the Army, Waterways Experiment Station, Vicksburg, Mississippi 39180-0631.

Fairfax, CA Municipal Code of Ordinances Chapter 8.36: Trees. http://www.town-of-fairfax.org/html/ dept_ planbuild_zoning.html. Accessed March.

Federal Register. November 13, 1986. Department of Defense, Corps of Engineers, Department of the Army, 33 CFR Parts 320 through 330, Regulatory Programs of the Corps of Engineers; Final Rule. Vol. 51, No. 219; page 41217.

Friends of Corte Madera Creek Watershed (FOCMCW). 2016. Fish Habitat Restoration Projects. http://www.friendsofcortemaderacreek.org; accessed April.

Google Earth. 2017. Aerial Imagery 1993-2016. Accessed January.

Gutiérrez, R. J., A. B. Franklin and W. S. Lahaye. 1995. Spotted Owl (Strix occidentalis), The Birds of North America Online (A. Poole, Ed.). Ithaca: Cornell Lab of Ornithology; Retrieved from the Birds of North America Online: http://bna.birds.cornell.edu/bna/species/179.

Jennings, M.R. 2004. An Annotated Check List of Amphibians and Reptile Species of California and Adjacent Waters, third revised edition. California Department of Fish and Game, Sacramento, CA.

Jennings, M.R. and M.P. Hayes. 1994. Amphibian and Reptile Species of Special Concern in California. California Department of Fish and Game, Inland Fisheries Division, Rancho Cordova, CA.

Leidy, R.A, G.S. Becker, and B.N. Harvey. 2005. Historical distribution and current status of steelhead/rainbow trout (*Oncorhynchus mykiss*) in streams of the San Francisco Bay Estuary, California. Center for Ecosystem Management and Restoration, Oakland, CA.

Lowther, Peter E. 2000. Nuttall's Woodpecker (Picoides nuttallii), The Birds of North America Online (A. Poole, Ed.). Ithaca: Cornell Lab of Ornithology; Retrieved from the Birds of North America Online: http://bna.birds.cornell.edu/bna/species/555.

McShane, C., T. Hamer, H. Carter, G. Swartzman, V. Friesen, D. Ainley, R. Tressler, K. Nelson, A. Burger, L. Spear, T. Mohagen, R. Martin, L. Henkel, K. Prindle, C. Strong, and J. Keany. 2004. Evaluation report for the 5-year status review of the marbled murrelet in Washington, Oregon, and California. Unpublished report. EDAW, Inc. Seattle, Washington. Prepared for the U.S. Fish and Wildlife Service, Region 1. Portland, Oregon.

Mitchell, D.E. 2000. Allen's Hummingbird (*Selasphorus sasin*), The Birds of North America Online (A Poole, Ed.). Ithaca: Cornell Lab of Ornithology; Retrieved from the Birds of North America Online:http://bna.birds.cornell.edu/bna/species/501.

Moyle, P.B. 2002. Inland Fishes of California Revised and Expanded. University of California Press, Berkeley.

National Marine Fisheries Service. (NMFS). 2012. Final Recovery Plan for Central California Coast Coho Salmon Evolutionarily Significant Unit. National Marine Fisheries Service, Southwest Region, Santa Rosa, California.

National Marine Fisheries Service. (NMFS). 2007. Essential Fish Habitat. Online at: http://www.habitat.noaa.gov/protection/efh/index.html; most recently accessed: February.

National Marine Fisheries Service (NMFS). 2016. Intersection of USGS Topographic Quadrangles with NOAA Fisheries ESA Listed Species, Critical Habitat, Essential Fish Habitat, and MMPA Species Data. California Species List, West Coast Region. Online: http://www.westcoast.fisheries.noaa.gov/maps_data/california_species_list_tools.html; Accessed April 2017.

Ross Taylor and Associates. 2006. Catalog of Stream Crossings with Culverts, and other Manmade Impediments to Fish Passage Located on Anadromous Stream Reaches Within San Anselmo Creek, Corte Madera Creek Watershed Marin County California. Prepared for Friends of Corte Madera Creek Watershed.

Sawyer, J., T. Keeler-Wolf and J. Evens. 2009. A Manual of California Vegetation, Second Edition. California Native Plant Society, Berkeley, CA.

Shuford, W. D. 1993. The Marin County Breeding Bird Atlas: A Distributional and Natural History of Coastal California Birds. California Avifauna Series 1. Bushtit Books, Bolinas, CA.

Shuford, W.D., and T. Gardali (eds). 2008. California Bird Species of Special Concern: A ranked assessment of species, subspecies, and distinct populations of birds of immediate conservation concern in California. Studies of Western Birds 1. Western Field Ornithologists, Camarillo, California, and CDFG, Sacramento.

Stebbins, R.C. 2003. A Field Guide to Western Reptiles and Amphibians, third edition. The Peterson Field Guide Series, Houghton Mifflin Company, NY.

Thomson, R.C., A.N. Wright, and H.B. Shaffer. 2016. California Amphibian and Reptile Species of Special Concern. Co-published by the California Department of Fish and Wildlife and University of California Press. Oakland, California.

U.S. Army Corps of Engineers (USACE). 2008. Regional Supplement to the Corps of Engineers Wetland Delineation Manual: Arid West Region (Version 2.0).

U.S. Army Corps of Engineers. 2005. Regulatory Guidance Letter No. 05-05. Ordinary High Water Mark Identification.

U.S. Department of Agriculture (USDA), Natural Resources Conservation Service (NRCS). 2017. Soil Web Online Soil Mapper. http://websoilsurvey.nrcs.usda.gov/app/WebSoilSurvey.aspx; most recently accessed March.

U.S. Fish and Wildlife Service (USFWS). 2006. Transmittal of Guidance: Estimating the Auditory and Visual Disturbance to Northern Spotted Owls and Marbled Murrelets in Northwestern California. U.S. Fish and Wildlife Service, Arcata, California. July. 12 pp.

U.S. Fish and Wildlife Service (USFWS). 2008. Final Recovery Plan for the Northern Spotted Owl, Strix occidentalis caurina. U.S. Fish and Wildlife Service, Portland, Oregon. xii + 142 pp.

U.S. Fish and Wildlife Service (USFWS). 2009. Marbled Murrelet (*Brachyramphus marmoratus*) 5-Year Review. Washington Fish and Wildlife Office, Lacey, WA. June 12.

U.S. Fish and Wildlife Service (USFWS). 2012. Protocol for surveying proposed management activities that may impact northern spotted owl. Revised. Available: http://www.fws.gov/yreka/ES/2012RevisedNSOprotocol-2-15-12.pdf

U.S. Fish and Wildlife Service (USFWS). 2017. Official Species List for the Marin Road Bridge Preventative Maintenance Project. Consultation Code: 08ESMF00-2016-SLI-1018. June.

USFWS. 2016. National Wetlands Inventory website. U.S. Department of the Interior, USFWS, Washington, D.C. http://www.fws.gov/wetlands/Wetlands-Mapper; most recently accessed Jan.

U.S. Geological Survey (USGS). 2017. Bolinas, Novato, Petaluma Point, Point Bonita, San Francisco North, San Geronimo, San Rafael, San Quentin U.S. Geological Service 7.5' Quadrangles. 7.5 minute topographic maps.

University of California at Davis. 2016. Center for Watershed Sciences. Pisces: California Fish Data and Management Software. Available online at: http://pisces.ucdavis.edu/
Most recently accessed: March.

Western Bat Working Group (WBWG). 2017. Western bat species accounts. Available: http://wbwg.org/western-bat-species/. Accessed March.

Zeiner, D.C., W.F. Laudenslayer, Jr., K.E. Mayer, and M. White. 1990. California's Wildlife, Volume I-III: Amphibians and Reptiles, Birds, Mammals. California Statewide Wildlife Habitat Relationships System, California Department of Fish and Game, Sacramento, CA.

Appendix A – Plant and Wildlife Species Observed during the Site Visits

This page intentionally left blank

Appendix A1. Plant Species Observed During the Fairfax BPMP Bridges Site Visits (Bridges 27C0146, 27C0143, and 27C0141) on November 17, 2014, January 16 and March 16, 2015, April 12, 2016and June 23, 2016

Family	*Scientific Name*	Common Name
Other		
Hornwort (Anthocerotaceae)	*Anthceros* sp.	-
lichen	*Ramalina menziesii*	lace lichen
liverwort (Lunulariaceae)	*Lunularia* sp.	-
liverwort (Aytoniaceae)	*Reboulia* sp. (cf)	-
moss	*Alsia californica*	-
moss	*Brachythecium albicans*	-
moss	*Ceratodon purpureus*	-
moss	*Claopodium whippleanum*	-
moss	*Dendroalsia abietina*	-
moss	*Epipterygium tozeri*	-
moss	*Fissidens crispus*	-
moss	*Pohlia* sp.	-
moss	*Syntrichia princeps*	prince of mosses
moss	*Tortula muralis*	
Cupressaceae	*Sequoia sempervirens*	redwood
Dryopteridaceae	*Polystichum munitum*	western swordfern
Equisetaceae	*Equisetum arvense*	common horsetail
Polypodiaceae	*Polypodium californicum*	California polypody
Pteridaceae	*Adiantum jordanii*	California maidenhair fern
-	-	various landscape plantings
Eudicots		
Acanthaceae	Acanthus mollis	bear's breeches
Anacardiaceae	*Toxicodendron diversilobum*	poison oak
Apiaceae	*Foeniculum vulgare*	fennel
Apiaceae	*Sanicula crassicaulis*	sanicula
Apiaceae	*Scandix pectin-veneris*	Venus' needle
Apiaceae	*Torilis arvensis* ssp. *purpurea*	hedge parsley
Apocynaceae	*Vinca major*	big leaf periwinkle
Araliaceae	*Hedera helix*	English ivy
Asteraceae	*Adenocaulon bicolor*	trail marker
Asteraceae	*Carduus pycnocephalus*	Italian thistle
Asteraceae	*Taraxacum officinale*	common dandelion
Betulaceae	*Alnus rhombifolia*	white alder

Family	*Scientific Name*	Common Name
Boraginaceae	*Myosotis latifolia*	broadleaf forget me not
Brassicaceae	*Lunaria annua*	lunaria
Caprifoliaceae	*Lonicera japonica*	Japanese honeysuckle
Caprifoliaceae	*Symphoricarpos albus* var. *laevigatus*	snowberry
Caryophyllaceae	*Stellaria media*	common chickweed
Chenopodiaceae	*Chenopodium album*	lambs quarters
Cucurbitaceae	*Marah fabacea*	California man-root
Euphorbiaceae	*Euphorbia peplus*	petty spurge
Fabaceae	*Acacia melanoxylon*	blackwood acacia
Fabaceae	*Genista monspessulana*	French broom
Fabaceae	*Medicago polymorpha*	bur clover
Fabaceae	*Trifolium dubium*	little hop clover
Fabaceae	*Vicia sativa* ssp. *nigra*	narrow leaved vetch
Fagaceae	*Quercus agrifolia var. agrifolia*	coast live oak
Fagaceae	*Quercus kelloggii*	black oak
Geraniaceae	*Erodium botrys*	storks bill
Geraniaceae	*Erodium cicutarium*	storks bill
Geraniaceae	*Erodium (moschatum?)*	California filigree
Geraniaceae	*Geranium dissectum*	cut leaf geranium
Geraniaceae	*Geranium molle*	woodland geranium
Hypericacaeae	*Hypericum anagalloides*	Tinkers penny
Juglandaceae	*Juglans cinerea*	butternut
Lamiaceae	*Mentha pulegium*	penny royal
Lamiaceae	*Mentha spicata*	spearmint
Lamiaceae	*Stachys rigida* var. *querectorum*	hedge-nettle
Lauraceae	*Umbellularia californica*	California bay
Montiaceae	*Claytonia perfoliata*	miners lettuce
Moraceae	*Ficus carica*	edible fig
Myrsinaceae	*Lysimachia arvensis*	scarlet pimpernel
Oleaceae	*Ligustrum japonicum*	privet
Oxalidaceae	*Oxalis incarnata*	crimson wood sorrel
Oxalidaceae	*Oxalis pes-carpe*	Bermuda buttercup
Papaveraceae	*Fumaria capreolata*	white ramping fumitory
Plantaginaceae	*Plantago lanceolata*	English plantain
Platanaceae	*Platanus racemosa* *(P. x hispanica?)*	sycamore
Polygonaceae	*Rumex acetosella*	sheep sorrel
Polygonaceae	*Rumex conglomeratus*	dock

Family	*Scientific Name*	Common Name
Polygonaceae	*Rumex (obtusifolius*?)	bitterdock
Ranunculaceae	*Clematis ligusticifolia*	western virgins bower
Rosaceae	*Amelanchier utahensi*s	service berry
Rosaceae	*Cotoneaster pannosus*	silverleaf cotoneaster
Rosaceae	*Prunus* sp.	prunus
Rosaceae	*Pyracantha angustifolia*	firethorn
Rosaceae	*Rosa* sp.	rose (landscape plant)
Rosaceae	*Rubus armeniacus*	Himalayan blackberry
Rosaceae	*Rubus ursinus*	California blackberry
Ruscaceae	*Maianthemum (racemosum?)*	False Solomon's seal
Rubiaceae	*Galium aparine*	goosegrass
Sapindaceae	*Acer macrophyllum*	big leaf maple
Sapindaceae	*Acer negundo*	boxelder
Sapindaceae	*Aesculus californica*	buckeye
Urticaceae	*Urtica dioica*	stinging nettle
Monocots		
Alliaceae	*Allium triquetrum*	Three-cornered leek
Amaryllidaceae	*Galanthus* sp.	snowdrop (landscape plant)
Araceae	*Zantedeschia aethiopica*	calla-lily
Cyperaceae	*Carex* sp.	sedge
Cyperaceae	*Cyperus eragrostis*	tall flat nut-sedge
Iridaceae	*Chasmanthe aethiopica*	coral lily (landscape plant)
Iridaceae	*Freesia* sp. (landscape planting)	freesia
Juncaceae	*Juncus articus* var. *balticus*	Baltic rush
Juncaceae	*Juncus patens*	rush
Juncaceae	*Juncus* sp.	rush
Poaceae	*Agrostis* sp.	bent grass
Poaceae	*Avena barbata*	slender wild oat
Poaceae	*Avena fatua*	wild oat
Poaceae	*Bromus diandrus*	ripgut brome
Poaceae	*Bromus* sp.	brome
Poaceae	*Cortaderia jubata*	pampus grass
Poaceae	*Cynosurus echinatus*	hedgehog dogtail
Poaceae	*Ehrharta erecta*	panic veldtgrass
Poaceae	*Festuca myuros*	rattail grass
Poaceae	*Festuca perennis*	perennial ryegrass
Poaceae	*Hordeum murinum* sp. *murinum*	wall barley
Poaceae	*Poa annua*	annual bluegrass

Appendix A2. Wildlife Species Observed During the Fairfax BPMP Bridges Site Visits (Bridges 27C0146, 27C0143, and 27C0141) on November 17, 2014 and March 15, 2016 Site Visits.

Scientific Name	Common Name
Mammals	
Felis catus	feral cat
Sciurus griseus	western gray squirrel
Sciurus niger	fox squirrel
Odocoileus hemionus columbianus	black-tailed deer
Birds	
Aphelocoma californica	California scrub-jay
Baeolophus inornatus	oak titmouse
Cathartes aura	turkey vulture
Corvus brachyrhynchos	American crow
Euphagus cyanocephalus	Brewer's blackbird
Haemorhous mexicanus	house finch
Melanerpes formicivorus	acorn woodpecker
Picoides nuttallii	Nuttall's woodpecker
Poecile rufescens	chestnut backed chickadee
Corvus corax	common raven
Cyanocitta stelleri	Steller's jay
Spinus psaltria	lesser goldfinch
Zenaida macroura	mourning dove
Zonotrichia leucophrys	white-crowned sparrow
Fish	
Gasterosteus aculeatus	*threespine stickleback*
Cottus asper	*prickly sculpin*
Invertebrates	
Potamopyrgus antipodarum	*New Zealand mud snail*
Pieris rapae	*cabbage white*

Appendix B - USFWS Species List

This page intentionally left blank

United States Department of the Interior

FISH AND WILDLIFE SERVICE
Sacramento Fish And Wildlife Office
Federal Building
2800 Cottage Way, Room W-2605
Sacramento, CA 95825-1846
Phone: (916) 414-6600 Fax: (916) 414-6713

In Reply Refer To: June 05, 2017
Consultation Code: 08ESMF00-2016-SLI-1018
Event Code: 08ESMF00-2017-E-06074
Project Name: Marin Road Bridge Preventative Maintenance Project

Subject: Updated list of threatened and endangered species that may occur in your proposed project location, and/or may be affected by your proposed project

To Whom It May Concern:

The enclosed species list identifies threatened, endangered, proposed and candidate species, as well as proposed and final designated critical habitat, under the jurisdiction of the U.S. Fish and Wildlife Service (Service) that may occur within the boundary of your proposed project and/or may be affected by your proposed project. The species list fulfills the requirements of the Service under section 7(c) of the Endangered Species Act (Act) of 1973, as amended (16 U.S.C. 1531 et seq.).

Please follow the link below to see if your proposed project has the potential to affect other species or their habitats under the jurisdiction of the National Marine Fisheries Service:

http://www.nwr.noaa.gov/protected_species/species_list/species_lists.html

New information based on updated surveys, changes in the abundance and distribution of species, changed habitat conditions, or other factors could change this list. Please feel free to contact us if you need more current information or assistance regarding the potential impacts to federally proposed, listed, and candidate species and federally designated and proposed critical habitat. Please note that under 50 CFR 402.12(e) of the regulations implementing section 7 of the Act, the accuracy of this species list should be verified after 90 days. This verification can be completed formally or informally as desired. The Service recommends that verification be completed by visiting the ECOS-IPaC website at regular intervals during project planning and implementation for updates to species lists and information. An updated list may be requested through the ECOS-IPaC system by completing the same process used to receive the enclosed list.

The purpose of the Act is to provide a means whereby threatened and endangered species and the ecosystems upon which they depend may be conserved. Under sections 7(a)(1) and 7(a)(2) of the Act and its implementing regulations (50 CFR 402 et seq.), Federal agencies are required to

utilize their authorities to carry out programs for the conservation of threatened and endangered species and to determine whether projects may affect threatened and endangered species and/or designated critical habitat.

A Biological Assessment is required for construction projects (or other undertakings having similar physical impacts) that are major Federal actions significantly affecting the quality of the human environment as defined in the National Environmental Policy Act (42 U.S.C. 4332(2)(c)). For projects other than major construction activities, the Service suggests that a biological evaluation similar to a Biological Assessment be prepared to determine whether the project may affect listed or proposed species and/or designated or proposed critical habitat. Recommended contents of a Biological Assessment are described at 50 CFR 402.12.

If a Federal agency determines, based on the Biological Assessment or biological evaluation, that listed species and/or designated critical habitat may be affected by the proposed project, the agency is required to consult with the Service pursuant to 50 CFR 402. In addition, the Service recommends that candidate species, proposed species and proposed critical habitat be addressed within the consultation. More information on the regulations and procedures for section 7 consultation, including the role of permit or license applicants, can be found in the "Endangered Species Consultation Handbook" at:

http://www.fws.gov/endangered/esa-library/pdf/TOC-GLOS.PDF

Please be aware that bald and golden eagles are protected under the Bald and Golden Eagle Protection Act (16 U.S.C. 668 et seq.), and projects affecting these species may require development of an eagle conservation plan (http://www.fws.gov/windenergy/eagle_guidance.html). Additionally, wind energy projects should follow the wind energy guidelines (http://www.fws.gov/windenergy/) for minimizing impacts to migratory birds and bats.

Guidance for minimizing impacts to migratory birds for projects including communications towers (e.g., cellular, digital television, radio, and emergency broadcast) can be found at: http://www.fws.gov/migratorybirds/CurrentBirdIssues/Hazards/towers/towers.htm; http://www.towerkill.com; and http://www.fws.gov/migratorybirds/CurrentBirdIssues/Hazards/towers/comtow.html.

We appreciate your concern for threatened and endangered species. The Service encourages Federal agencies to include conservation of threatened and endangered species into their project planning to further the purposes of the Act. Please include the Consultation Tracking Number in the header of this letter with any request for consultation or correspondence about your project that you submit to our office.

Attachment(s):

- Official Species List

Official Species List

This list is provided pursuant to Section 7 of the Endangered Species Act, and fulfills the requirement for Federal agencies to "request of the Secretary of the Interior information whether any species which is listed or proposed to be listed may be present in the area of a proposed action".

This species list is provided by:

Sacramento Fish And Wildlife Office
Federal Building
2800 Cottage Way, Room W-2605
Sacramento, CA 95825-1846
(916) 414-6600

Project Summary

Consultation Code: 08ESMF00-2016-SLI-1018

Event Code: 08ESMF00-2017-E-06074

Project Name: Marin Road Bridge Preventative Maintenance Project

Project Type: BRIDGE CONSTRUCTION / MAINTENANCE

Project Description: Marin Road Bridge (Br. No. 27C-0143) is a single span concrete earth-filled closed arch structure, constructed presumably circa 1930 over Fairfax Creek, Town of Fairfax, California. The bridge is on a residential street leading to Sir Francis Drake Boulevard, a major arterial through the town of Fairfax. The structure is approximately 41 feet long and a little over 26 feet wide. It supports two lanes of traffic nearly 10 feet above the creek bed. Repairs to Marin Road Bridge will focus on the toppling bridge wingwall, tattered rock slope protection around the same wingwall, structural damage to a second wingwall, and soffit spalls. Repair of the wingwalls will involve creek excavation and burying riprap such that final grade will remain unchanged from pre-work conditions. The work will be at both the deck and below deck levels and is expected to take as many as ten working days from start to finish. Work will be conducted within one dry season (April 15 - October 15).

Project Location:

Approximate location of the project can be viewed in Google Maps:
https://www.google.com/maps/place/37.9934010523286N122.59468204707034W

Counties: Marin, CA

Endangered Species Act Species

There is a total of 18 threatened, endangered, or candidate species on your species list. Species on this list should be considered in an effects analysis for your project and could include species that exist in another geographic area. For example, certain fish may appear on the species list because a project could affect downstream species. See the "Critical habitats" section below for those critical habitats that lie wholly or partially within your project area. Please contact the designated FWS office if you have questions.

Mammals

NAME	STATUS
Salt Marsh Harvest Mouse *(Reithrodontomys raviventris)* No critical habitat has been designated for this species. Species profile: https://ecos.fws.gov/ecp/species/613	Endangered

Birds

NAME	STATUS
California Clapper Rail *(Rallus longirostris obsoletus)* No critical habitat has been designated for this species. Species profile: https://ecos.fws.gov/ecp/species/4240	Endangered
California Least Tern *(Sterna antillarum browni)* No critical habitat has been designated for this species. Species profile: https://ecos.fws.gov/ecp/species/8104	Endangered
Marbled Murrelet *(Brachyramphus marmoratus)* Population: U.S.A. (CA, OR, WA) There is a **final** critical habitat designated for this species. Your location is outside the designated critical habitat. Species profile: https://ecos.fws.gov/ecp/species/4467	Threatened
Northern Spotted Owl *(Strix occidentalis caurina)* There is a **final** critical habitat designated for this species. Your location is outside the designated critical habitat. Species profile: https://ecos.fws.gov/ecp/species/1123	Threatened
Short-tailed Albatross *(Phoebastria (=Diomedea) albatrus)* No critical habitat has been designated for this species. Species profile: https://ecos.fws.gov/ecp/species/433	Endangered
Western Snowy Plover *(Charadrius alexandrinus nivosus)* Population: Pacific Coast population DPS-U.S.A. (CA, OR, WA), Mexico (within 50 miles of Pacific coast) There is a **final** critical habitat designated for this species. Your location is outside the designated critical habitat. Species profile: https://ecos.fws.gov/ecp/species/8035	Threatened

Amphibians

NAME	STATUS
California Red-legged Frog *(Rana draytonii)* There is a **final** critical habitat designated for this species. Your location is outside the designated critical habitat. Species profile: https://ecos.fws.gov/ecp/species/2891	Threatened

Fishes

NAME	STATUS
Delta Smelt *(Hypomesus transpacificus)* There is a **final** critical habitat designated for this species. Your location is outside the designated critical habitat. Species profile: https://ecos.fws.gov/ecp/species/321	Threatened
Steelhead *(Oncorhynchus (=Salmo) mykiss)* Population: Northern California DPS There is a **final** critical habitat designated for this species. Your location is outside the designated critical habitat. Species profile: https://ecos.fws.gov/ecp/species/1007	Threatened
Tidewater Goby *(Eucyclogobius newberryi)* There is a **final** critical habitat designated for this species. Your location is outside the designated critical habitat. Species profile: https://ecos.fws.gov/ecp/species/57	Endangered

Insects

NAME	STATUS
Mission Blue Butterfly *(Icaricia icarioides missionensis)* No critical habitat has been designated for this species. Species profile: https://ecos.fws.gov/ecp/species/6928	Endangered
Myrtle's Silverspot Butterfly *(Speyeria zerene myrtleae)* No critical habitat has been designated for this species. Species profile: https://ecos.fws.gov/ecp/species/6929	Endangered
San Bruno Elfin Butterfly *(Callophrys mossii bayensis)* No critical habitat has been designated for this species. Species profile: https://ecos.fws.gov/ecp/species/3394	Endangered

Flowering Plants

NAME	STATUS
Marin Dwarf-flax *(Hesperolinon congestum)* No critical habitat has been designated for this species. Species profile: https://ecos.fws.gov/ecp/species/5363	Threatened
Santa Cruz Tarplant *(Holocarpha macradenia)* There is a **final** critical habitat designated for this species. Your location is outside the designated critical habitat. Species profile: https://ecos.fws.gov/ecp/species/6832	Threatened
Showy Indian Clover *(Trifolium amoenum)* No critical habitat has been designated for this species. Species profile: https://ecos.fws.gov/ecp/species/6459	Endangered
White-rayed Pentachaeta *(Pentachaeta bellidiflora)* No critical habitat has been designated for this species. Species profile: https://ecos.fws.gov/ecp/species/7782	Endangered

Critical habitats

There are no critical habitats within your project area.

Appendix C – Preparers Qualifications

This page intentionally left blank

Kelly Biological Consulting
5San Anselmo, CA 94960
(415) 482-9703

P.O. Box 1625
Truckee, CA 96160
(530) 582-9713

CAPABILITIES

Kelly Biological Consulting is a WBE certified, small business experienced in conducting wetland delineations and special status plant surveys, creating vegetation maps, preparing permits, mitigation plans, and the vegetation sections of CEQA and NEPA environmental documents. The firm's primary goals are responding to client needs and providing top quality work using the knowledge that comes from years of experience. Kelly Biological Consulting subcontracts wildlife and fisheries biologists to offer a full range of biological services.

PRINCIPAL

Micki Kelly, Principal, Plant Ecologist
Professional Wetland Scientist (Certification #001007)

- Experienced in conducting plant surveys and wetland delineations in a wide variety of habitats.
- Managed the wetland permitting tasks for construction of a gas transmission line that crossed over 200 wetlands and "other waters" in California, Oregon, and Nevada. Negotiated with 3 U.S. Army Corps of Engineers Districts, 5 Regional Water Quality Control Boards, and other agencies pursuant to the Clean Water Act Sections 401, 402, and 404, and the Porter Cologne Act.
- Taught plant identification and ecology for the U.S. Army Corps of Engineers wetland delineation 40-hour training program. Also taught a class in Sierra Nevada flora and special status plants.
- Designed and implemented a monitoring plan that provided accurate comprehensive data while controlling costs for the 230-mile Tuscarora Gas Transmission Line and the 164-mile Alturas Intertie Project.
- Developed and implemented two large-scale off-site wetland mitigation areas.
- Received written commendation from the U.S. Army Corps of Engineers and California Department of Fish and Wildlife on a wetland permit and mitigation plan for a project in the Sierra foothills involving a Section 7 consultation.

Ms. Kelly has 25 years of relevant experience, successfully managing multi-faceted projects with wetland and endangered species issues, supervising staff and subcontractors. She completes projects on time and within budget. She studied plant ecology, taxonomy, and statistics at the University of Michigan, San Francisco State University, and the University of California, Berkeley. She has taught plant identification and ecology for the U.S. Army Corps of Engineers wetland delineation 40-hour training program. Prior to establishing Kelly Biological Consulting in 1994, she worked as a plant ecologist for WRA, CH2MHill, and Harding Lawson Associates.

Ms. Kelly has conducted sensitive plant species surveys and written impact and mitigation texts for California Environmental Quality Act (CEQA) and National Environmental Policy Act (NEPA) documents and as well as baseline information on restoration sites. She is experienced in designing sensitive plant surveys in accordance with the current California Native Plant Society and the California Department of Fish and Wildlife guidelines. She has conducted vegetation studies in habitats ranging from coastal salt marsh to foothill riparian and montane meadows in California and Nevada. She has extensive experience in designing suitable search patterns based on the desired level of intensity. Ms. Kelly has prepared biological assessments and developed special status plant mitigation and monitoring plans requiring substantial understanding of plant ecology.

Ms. Kelly has performed wetland assessments and delineations on numerous projects including complex filled and excavated problem wetlands, montane areas, farmed wetlands, two diked historic salt marshes that were over 1,000 acres, numerous small emergent wetlands, several 2,000+ acre sites in the Sierra Nevada, alkali playas, foothill riparian zones, and coastal salt marsh restoration sites. Ms. Kelly has expertise in Army Corps of Engineers approved sampling techniques and the data analysis that is used in performing routine and comprehensive delineation. She has developed and implemented wetland monitoring plans using the techniques currently known to be the most successful in wetland mitigation design and construction.

Ms. Kelly has extensive experience in the legal aspects of sensitive species and wetland protection. She has authored Army Corps of Engineers Permits involving Section 7 consultations, one of which received written commendation from the Army Corps of Engineers and Department of Fish and Game.

EDUCATION

BS Botany, University of Michigan
Graduate studies, University of California Berkeley and San Francisco State University

PROFESSIONAL SOCIETIES

Society of Wetland Scientists, Certified Professional Wetland Scientist
California Native Plant Society, Past Marin Chapter Board Member (8 years)
Society for Ecological Restoration
California Botanical Society
California Native Grass Association
California Invasive Plant Council (Cal-IPC)

REPRESENTATIVE PROJECTS

Project: **Central Marin Police Station, Larkspur, CA**
Client: **Central Marin Police Authority**

The Twin Cites Police Authority was planning to rebuild their police station when concerns about the existing storm drain outfalls and bank stability arose. Initial building construction was pending. Therefore, the first challenge was obtaining the federal and state permits quickly, even though sensitive brackish marsh habitat was adjacent to the site. Kelly Biological Consulting was able to conduct the wetland delineation and special status species surveys, and expedite the permits within the project deadlines. The second challenge was the site constraints (physical and biological). The site is on the outside bank of a ninety-degree bend in the creek, at the junction of freshwater and tidal flows. It is subject to large hydraulic forces in the winter and high salinity in the summer. In conjunction with the project geotechnical firm and the engineers, Ms. Kelly developed a restoration

design that successfully addressed the difficult site conditions. Ms. Kelly is currently conducting the wetland monitoring.

Project: Doherty Drive, Larkspur, CA
Client: Larkspur Department of Public Works (partially funded by Caltrans)

The Larkspur Department of Public Works rebuilt Doherty Drive and replaced storm drain outfall structures to address flood control and other road problems. In addition, they incorporated an NTTP bike path. One of the challenges of the project was dealing with construction within brackish marsh habitat where special status species are known to occur, while working within a tight schedule. Kelly Biological Consulting conducted a wetland delineation and botanical studies. The firm prepared the permit applications, and negotiated with the regulatory agencies with the goal of constructing the outfalls in a timely, cost effective manner. Construction was completed with positive reviews from the agencies.

Project: Alexander Avenue Bridge Retrofit/Rehabilitation, Larkspur, CA
Client: Larkspur Department of Public Works (partially funded by Caltrans)

The Larkspur Department of Public Works retrofitted and rehabilitated the Alexander Ave. Bridge. Kelly Biological Consulting provided pre-construction monitoring which was conducted by WRA as a subcontractor. Ms Kelly also negotiated with California Department of Fish and Wildlife regarding tree removal and planted acorns as mitigation for tree removal.

Project: Doherty Drive Bridge Replacement, Larkspur, CA
Client: Larkspur Department of Public Works (partially funded by Caltrans)

The Larkspur Department of Public Works replaced Doherty Drive Bridge. The project required construction within brackish marsh habitat and a creek where special status species are known to occur. Kelly Biological Consulting provided construction monitoring with WRA as a subcontractor. Due to schedule issues, the project required working within protected species work windows. Ms Kelly negotiated with the regulatory agencies with the goal of completing construction to avoid the additional impacts to the community that would have occurred had construction been halted until the following season.

Project: Highway Interchange, San Benito, CA
Client: Subcontractor to WRA

A proposed project required the evaluation of potential interchange alternatives. The site was near the Pajaro River. Kelly Biological Consulting conducted the special status plant surveys and contributed to preparation of the NES.

Project: Caltrans Marin Narrows Road Widening, Marin County, CA
Client: Subcontractor to WRA

Kelly Biological Consulting conducted a wetland delineation for the proposed Highway 101 widening in Marin as a subcontractor to WRA and CH2MHill. Work included field analysis, report and map preparation, and supervising WRA and CH2MHill staff. The most challenging element of the work was addressing SWANCC and Rapanos issues along a highway that had highly altered hydrology.

Project: U.S. Army Corps of Engineers Wetland Training Class, CA
Client: San Francisco State University

Ms. Kelly has taught the plant ecology portion of a wetland delineation class. The students learned the basic elements of plant identification, methods for determining wetland status, dominant species, and the wetland-upland boundary.

Information on additional projects available on request.

DANIEL CHASE, MS

Associate
Fisheries Biologist

chase@wra-ca.com
o: 415.524.7252
c: 707.363.5045

Years of Experience: 10

Education

MS, Physiology and Behavioral Biology, San Francisco State University, 2014

BS, Conservation and Resource Studies, University of California, Berkeley, 2005

Professional Affiliations/ Certifications

USFWS Recovery Permit for Tidewater Goby (TE-237061)

CDFG Scientific Collectors Permit (#8472)

Transportation Worker Identification Credential (TWIC)

American Association for the Advancement of Science

Specialized Training

40-Hour HAZWOPER Training

Fish Passage Design & Engineering Workshop, CDFG, NOAA Fisheries

Backpack Electrofishing: Principles and Practices

Freshwater Fish Identification – Biology, Ecology & Morphology

During his time with WRA, Dan has managed and worked on a diversity of fisheries and wildlife related projects including permitting, endangered species consultation, protocol level surveys, habitat evaluation and assessments, rescue and relocation, and monitoring. He has extensive experience with fisheries related issues throughout California, and currently holds a Recovery Permit from the U.S. Fish and Wildlife Service (USFWS) for tidewater goby. His technical expertise includes fisheries ecology, fish passage evaluation, geomorphic surveying, special status species surveys, habitat assessments, and eelgrass surveys. Dan's environmental work experience prior to starting with WRA includes fisheries and wildlife work in southern California, eelgrass work in Washington, and oil spill response in the Gulf of Mexico.

Dan has experience with environmental permitting including Endangered Species Act Section 7 and Essential Fish Habitat consultation, California Department of Fish and Wildlife (CDFW) Streambed Alteration Agreements, CDFW Incidental Take Permits (2081), and biological resource assessments prepared for the California Environmental Quality Act (CEQA). His experience includes the preparation of technical documents and implementation of permit compliance, mitigation, and monitoring requirements for these permits. Dan has experience with special status species including: longfin smelt, tidewater goby, steelhead, Chinook salmon, Santa Ana sucker, unarmored threespine stickleback, California red-legged frog, California tiger salamander, burrowing owl, clapper rail, black rail, Swainson's hawk, Bay checkerspot butterfly, Callippe silverspot butterfly, pool fairy shrimp, and tadpole shrimp.

Representative Projects

County of Santa Clara, Bridge Scour Natural Environmental Studies, Santa Clara County, California

Twelve bridge locations within Santa Clara County were identified by Caltrans as having critical abutment scour necessitating repair. The Santa Clara County Roads and Airports Department, with funding from Caltrans, is completing the repairs, working with the Caltrans Office of Local Assistance. To complete these repairs, each bridge site was required to complete a Natural Environment Study (Minimal Impact) (NES MI) to evaluate the potential for impacts to biological resources, analyze permit requirements, and describe avoidance, minimization, and mitigation measures. Dan served as a lead biologist and his project work included site visits, design of mitigation and avoidance measures, and agency coordination in the preparation of the documents. Once permits were issued, including a National Marine Fisheries Service Biological Opinion, he lead fish salvage crews during dewatering activities.

Old Canyon Road Bridge Scour Repair Biological Surveys and Permitting, Fremont, California
WRA is teaming with David J. Powers & Associates and Schaaf & Wheeler to complete the environmental review and permitting studies necessary to repair scour on a bridge across Alameda Creek in Fremont, California. Alameda Creek is not currently an anadromous fish stream, but restoration will begin in 2014 to construct fish ladders and return anadromous steelhead to Alameda Creek. The Old Canyon Road Bridge currently presents a low-flow fish passage barrier due to the presence of poured concrete in the creek bed beneath the bridge. The bridge scour repair will remove the concrete and install rock protection around the bridge abutments. WRA prepared Caltrans biological resources documentation for the project and engaged with the National Marine Fisheries Service in a Technical Assistance for concurrence that the design would not be detrimental to fish passage once the downstream fish ladders had been completed. WRA worked with the project engineers to assess potential fish passage issues at the bridge and to develop plans for fish passage that meet the National Marine Fisheries Service and California Department of Fish and Wildlife standards for fish passage. Dan was the project lead fisheries biologist for WRA and was involved in the preparation of environmental documentation and resource agency permit applications.

Mare Island Ship Yard Dry Dock Fish Salvage, Vallejo, California
Marine vessels and barges are brought to the dry docks at the former Mare Island Naval Shipyard to be serviced and repaired. In accordance with permit requirements of USFWS, National Marine Fisheries Service (NMFS), and CDFW, biologists are required to be present during final stages of dewatering to salvage (rescue) stranded fish from the dry dock. Dan serves as project manager and lead fisheries biologist. He is responsible for leading field crews, coordinating with resource agency personnel, ensuring permit compliance, and authoring technical reports following each salvage event. He has also led consultation meetings, prepared biological assessments for the NMFS and USFWS permits, and assisted with amending an existing CDFW permit to reduce mitigation requirements for the dry dock. He is authorized to handle and relocate longfin smelt, Delta smelt, steelhead, Chinook salmon and green sturgeon at this site. This project is ongoing.

Pastori Avenue Bridge Outfall, Marin County, California
Dan served as the lead fisheries biologist for a bank stability and outfall project in San Anselmo Creek within the town of Fairfax. Project work included a multi-day fish rescue and relocation under the authorization of a NMFS Biological Opinion. Several juvenile steelhead were successfully relocated out of the work area prior to the initiation of construction. During project work, Dan identified the invasive New Zealand mudsnail in the creek, which had previously not been documented for this watershed. NMFS and CDFW were notified of the occurrence.

Caltrans Southern California Lagoon Study, San Diego County, California
California Department of Transportation is analyzing impacts and potential sources of mitigation for sensitive species and habitat for the Interstate 5 widening in San Diego County. As part of an analysis for increases in tidal inundation, Dan participated in wetland assessments and led field crews in biological assessments and topographic surveys within six coastal lagoons in northern San Diego County. During the biological assessments, several coastal California gnatcatcher pairs were identified and suitable breeding habitat for the species was mapped. The second phase of this project, which involves computer based simulation and analysis of increased tidal inundation, is ongoing.

Salmonid Habitat Assessment and Relocation in California
Dan has worked on several projects designed to assess potential habitat for salmonid species. Survey techniques include CDFG protocol level stream habitat assessment, red and carcass spawning surveys, substrate composition and permeability sampling, geomorphic surveys, water quality sampling and analysis, various forms of netting and trapping, and snorkel surveys for identification purposes. Survey work has been conducted in Napa, Sonoma, Shasta, Santa Clara, Monterey, San Luis Obispo, Santa Barbara, Ventura, and Kern Counties.

Permanente Quarry Aquatic Baseline, Santa Clara County, California
Permanente Quarry is a 3600 acre property located in western Santa Clara County at the northern extent of the Santa Cruz Mountains. As part of the quarry's planned expansion, Dan designed and implemented a study of the habitat and aquatic fauna of two headwater creeks on the property. The following field studies were completed as part of this work: fish were surveyed by seine and visually to determine species composition, distribution and relative abundance; nocturnal time-constraint visual encounter surveys were employed to document amphibian species composition, distribution and relative abundance; benthic macroinvertebrates (BMI) were sampled at eight representative locations in accordance with the California Stream Bioassessment Procedure (CSBP). The collected BMIs were sorted by taxa and the data analyzed according to accepted metrics; and a detailed physical habitat study was conducted to quantify the condition and value of the current aquatic habitat. A technical report was completed that will serve as a baseline of the available habitat and existing fauna within the two watersheds.

Grady Ranch Creek Restoration and Permitting, Marin County, California
As part of a proposed Grady Ranch Development in Marin County, a large scale creek restoration and fish passage improvement was designed and permitted. WRA provided biological services which included fish passage assessment, habitat mapping, fisheries surveys, California red-legged frog protocol level surveys, design review, agency consultation, permitting, and the preparation of long term monitoring plans. Dan served as the lead fisheries biologist for the project, and was involved with biological surveys, fish passage assessments, habitat mapping, consultation, and prepared a biological assessment to support the projects permits. While the project never went to construction, the restoration design was the process of receiving approval from the resource agencies.

Fish Passage Assessment in California
Dan has worked with several teams on the identification and assessment of fish passage barriers for anadromous species, which involved onsite qualitative habitat analysis and quantitative data collection utilizing a Total Station Survey Instrument. His survey work and professional assessments have been used as supplemental components to technical reports and as part of a state wide database that is in process for Caltrans. Fish passage assessments have been performed in various watersheds of Marin, Contra Costa, Monterey, Santa Barbara, Ventura and Los Angeles Counties.

Santa Clara River Estuary Habitat Restoration and Enhancement Feasibility Study, Ventura County, California
A Fisheries Restoration Grant Program through CDFW funded a feasibility study and conceptual design development for the restoration of estuarine fish habitat along the Santa Clara River Estuary. Following the preparation of an existing conditions technical report, stake holder outreach and restoration designs were crafted to focus on the conversion of an existing developed campground back to higher quality estuarine habitat. The campground would then be relocated from its current footprint. Dan served as the project manager and lead biologist. His work included a habitat assessment, report preparation, design review, participation in outreach meetings, and team management. The final feasibility report for the preferred concept will be released in 2015.

Napa Dry Bypass Flood Control, Napa County, California
As part of a comprehensive flood control program for Napa County, a high flow bypass channel and creek restoration at the confluence of Napa Creek and Napa River was constructed in downtown Napa. Dan served as the project's lead fisheries biologist, which involved fish rescue and relocation, otter trawl fish sampling, fish exclusion, pile driving monitoring, and daily construction checks. He also assisted Napa County Flood Control District with a permit amendment to the project's CDFW Incidental Take Permit. The completion of the dry bypass project resulted in increased flood capacity and improved habitat conditions for special-status fish including steelhead and longfin smelt.

Marin County Public Works Fisheries Services, Marin County, California
Marin County Department of Public Works (MCDPW) underwent maintenance sediment removal at multiple culverts in West Marin. WRA provided biological support services for the sediment removal, which included pre-construction California red-legged frog surveys, environmental training, fish rescue and relocation and biological monitoring. During fish relocation, tidewater goby was encountered in an area they had not previously been documented to occur. Following the project work, WRA prepared a supplemental biological assessment of tidewater goby addressing sediment removal activities for MCDPW. Dan served as the project manager, lead fisheries biologist, and authored the supplemental biological assessment.

Callippe Preserve, Pleasanton, California
The Callippe Preserve was established as mitigation for the construction of the Pleasanton Municipal (Callippe) Golf Course. As a component of the wildlife management plan and USFWS Biological Opinion, Dan has conducted hydrological monitoring, annual sampling for California Tiger Salamander, and required predator monitoring and removal within the Preserve Conservation Areas. In 2009, Dan discovered a new population of California red-legged frog within a Preserve Conservation Area pond. Predator removal via hand capture, hook and line, gigging, shooting, and dipnet capture continued throughout 2009 and 2010. Successful breeding of California red-legged frog was confirmed in 2010. In October 2010, Dan, with approval of the USFWS and the landowner, dewatered the pond using a gasoline-powered trash-pump to rid it of bass and bullfrogs. Monitoring is ongoing, however California red-legged frog breeding success is expected to improve in 2012. In the fall of 2013, non-native predatory fish were detected in the golf course irrigation ponds. Dan assisted with draining the ponds and eradicate the fish in compliance with the USFWS Biological Opinion and associated management plans. Dan assisted with the captured and retention of 22 CRLF during the dewatering. CRLF were released back into the irrigation ponds as soon as refilling resumed.

Frenchman's Creek Water District, San Mateo County, California
Frenchman's Creek Water District (FCWD) is a small water service provider located north of Half Moon Bay along coastal San Mateo County. A CDFW 1602 permit allows for the temporary installation of a flashboard dam and water withdrawal from the system. Dan serves as the fisheries biologist for this project and the FCWD, which involves monitoring flow and habitat conditions during the diversion period, permit compliance, and annual reporting. This project is currently ongoing.

Potrero Creek Restoration Carmel, California
Dan helped design, manage and implement the restoration of Potrero Creek, in the Carmel Valley, California. A large landslide altered the existing channel and was undermining a road. Dan aided with the design to restore the previous channel alignment and use the altered channel as a high water channel which would provide rearing habitat for steelhead and California red-legged frog. He conducted environmental training for the workers, pre and post restoration geomorphic surveys, served as the onsite biological monitor and restoration manager during construction, and assisted with the permitting of the project.

Draper Inverness Dock Permitting, Marin County, California
In accordance with permit requirements of USFWS and NMFS, Dan performed pre-construction eelgrass surveys at a dock replacement project in Tomales Bay. Dan also performed daily construction monitoring for all inwater work, conducted environmental sensitivity training to on-site construction staff, and monitored environmental permit compliance for the project. Construction involved removal of creosote piles and installation of eelgrass friendly deck grating that allows light to penetrate beneath it. Following the construction of the dock, Dan led annual monitoring work to document the project effect on the eelgrass bed. Monitoring was completed in 2012 when the eelgrass bed was confirmed to have recovered to pre-construction conditions.

PATRICIA VALCARCEL, MS

Wildlife Biologist

valcarel@wra-ca.com

o: 415.454.8868 x1220

Years of Experience: 9

Education

MS, Wildlife Sciences, Oregon State University, 2011

BA, Environmental Sciences, Northwestern University, 2003

Professional Affiliations/ Certifications

USFWS Recovery Permit for giant gartersnake and San Francisco gartersnake (TE-64146A)

California Department of Fish and Wildlife Scientific Collecting Permit

The Wildlife Society

Specialized Training

- Biology and Management of the Alameda Striped Racer, Alameda County Conservation Partnership, May 2014
- San Joaquin Kit Fox Ecology, Conservation, and Survey Techniques, Central Coast Chapter of The Wildlife Society, Summer 2013
- Swainson's Hawks in California's Central Valley, Sacramento-Shasta Chapter of The Wildlife Society, Spring 2012
- Workshop on the Biology and Conservation of the California Tiger Salamander, Alameda County Conservation Partnership, June 2012
- Amphibian Inventory and Monitoring Protocol, Northwest Partners in Amphibian and Reptile Conservation, Spring 2011

Patricia Valcarcel earned a MS in Wildlife Sciences while conducting research on the spatial ecology of the threatened giant gartersnake. She has worked on a variety of field research projects ranging from animal movements to behavior and reproduction. She has presented her work at many conferences and published in peer-reviewed journals.

Patricia has extensive experience working with giant gartersnakes in the Sacramento Valley and assisted with mark-recapture surveys for San Francisco gartersnakes in San Mateo County. She has performed surveys and other activities related to California red-legged frog in Alameda, San Mateo, Los Angeles, Solano, and Sonoma Counties. Patricia also has extensive experience throughout California's Central Valley including protocol-level surveys for Swainson's hawk, burrowing owl, and assessments for San Joaquin kit fox and blunt-nosed leopard lizard. In addition, she has conducted observations and coordinated compliance for Pacific herring spawning in San Francisco Bay.

Patricia's primary responsibilities are to conduct surveys, habitat assessments, and write associated biological assessment and technical reports for special-status wildlife species. She has experience with the San Joaquin County Multi-Species Habitat Conservation Plan as one of the on-call biologists for the San Joaquin Council of Governments. In addition, Patricia is involved in environmental permitting, permit compliance, and mitigation and monitoring efforts associated with these permits.

Representative Projects

East Bay Municipal Utility District Mokelumne Aqueduct Project, San Joaquin County, California 2012 – 2013

Recoating of the Mokelumne Aqueduct Phase 8 – Slough Crossing Project will be conducted at four project sites located in San Joaquin and Contra Costa counties. In accordance with permits, a USFWS-approved giant gartersnake biologist is needed to perform pre-construction surveys and compliance monitoring. Patricia holds a USFWS Recovery Permit for giant gartersnake and was approved to perform the pre-construction surveys. She also monitored a Swainson's hawk nest within the Project Area to confirm nesting status of the pair and EBMUD compliance with avoidance measures.

San Joaquin Council of Governments, San Joaquin County, California 2012 – Present

WRA is contracted for on-call services related to the San Joaquin County Multi-Species Habitat Conservation and Open Space Plan (SJMSCP). Patricia has performed pre-construction surveys and recommended avoidance and minimization measures to ensure participants are in compliance with the SJMSCP. Wildlife species and habitats Patricia has encountered as part of this work include burrowing owl, California tiger salamander, and Swainson's hawk. In addition, Patricia prepared and consulted with the California Department of Fish and Wildlife on a burrowing owl exclusion plan. Following approval by CDFW, Patricia implemented the exclusion and monitoring plan.

Ridge Top Ranch Wildlife Conservation Bank, Solano County, California 2012 – 2015
WRA and Ridge Top Ranch, LLC (RTR) are in the process of developing over 280 acres of high quality California red-legged frog and callippe silverspot butterfly mitigation habitat located within Solano County, California. WRA, in consultation with the USFWs and under 10(a)(1)(A) Recovery Permit TE-212445-0, successfully translocated California red-legged frogs to created habitat within the RTR Wildlife Conservation Bank. WRA has been involved throughout the process, from selecting donor sites and planning habitat creation, to translocation of egg masses and monitoring the frogs to ensure that establishment at the receiving site was successful. Through the monitoring phase, Patricia assisted permit-holder Rob Schell in survey efforts, which included egg mass surveys at the donor site, visual counts at the receiving ponds, as well as the capture and handling of juvenile red-legged frogs to measure and install PIT tags. She also conducted a Callippe silverspot butterfly survey as part of annual monitoring efforts. Monitoring at this site is ongoing, and the Conservation Bank is in the final permitting stages.

Napa Valley Marina Permitting and Dredge Monitoring, Napa, California 2012 – Present
The Napa Valley Marina is an active recreational marina along the Napa River near Bull Island. Maintenance dredging of the Marina is necessary for boat access to and from the Napa River. Patricia is involved with a variety of environmental consulting services for the maintenance dredging including preparation of applications for the Dredged Materials Management Office (DMMO) and the California Department of Fish and Wildlife Streambed Alteration Agreement. Maintenance dredging permits included monitoring for special-status species and habitat conditions such as temperature and salinity monitoring for longfin smelt. Patricia oversees monitoring and compliance surveys for the multi-year maintenance dredging project.

Port of Richmond Inner Harbor Maintenance Dredging, Richmond, California 2014 – 2015
Maintenance dredging of the Port of Richmond Inner Harbor Channel was necessary to maintain passageways for the active port. The Pacific herring is a protected fishery, and dredging operations within the Pacific herring spawning season were unavoidable. Patricia was a California Department of Fish and Wildlife approved observer for the Project, and she coordinated a team of observers for the maintenance dredging Project. One spawning event occurred within the Project Area during dredging activities and Patricia consulted with CDFW to establish buffers. All Project activities were completed in compliance with the Project's Pacific Herring Work Window Waiver.

Bruno's Island Bridge Repair Project, Southwestern Sacramento County, California 2014
Bruno's Island is a small recreational boat harbor located off Andrus Island along the San Joaquin River in the western Delta. Bridge repair activities included sheathing piles within the channel and could potentially affect listed aquatic species. Patricia provided the hydroacoustic analysis and wrote the Section 7 Biological Assessment for Delta smelt, steelhead, and giant gartersnake. Through her work and advising on project design such as strike limits and use of bubble curtains outside of the work windows, a "Not Likely to Adversely Affect" was received from both NMFS and USFWS. This Project was completed in 2014.

12 Bridges, Santa Clara County, California 2012 – 2013
WRA was engaged by the County to prepare Natural Environment Study (Minimal Impact) reports, permitting documents, and Revegetation and Monitoring Plans for twelve bridges with critical abutment scour located throughout Santa Clara County, California. Patricia aided in the preparation of the Section 7 Biological Assessments for six of the bridges which incorporated California red-legged frog, California tiger salamander, Least Bell's vireo, and salmonid species. Based on those plans, she has conducted the pre-construction surveys and biological monitoring required by the U.S. Fish and Wildlife Service Biological Opinion in 2012 and 2013 work seasons.

Burrowing Owl Surveys and Passive Exclusion, Legacy on 101, San Jose, California 2014
The Legacy on 101 project is a 16.35 acre property in Santa Clara, California that is to be developed into two 6-story industrial park/office/R&D buildings. The area is known to support burrowing owl, and a series of take avoidance surveys was conducted from 2008 to 2014. Patricia observed one burrowing owl occupying the property in 2014. Patricia developed the exclusion and monitoring plan submitted to CDFW. During the non-nesting season, she passively excluded the owl and excavated all potential burrows at the site. Patricia conducted monitoring at the site every other week until construction activities were initiated and performed a pre-construction survey immediately prior to grading, per the exclusion plan.

Napa Dry Bypass, Napa, California 2014
The Napa Dry Bypass is designed to divert 100 year flows around the oxbow reach to avoid flooding the Soscol Gateway area in downtown Napa. Patricia is a CDFW-approved biologist for this Project, and Patricia has been involved with this project by monitoring compliance and construction activities during excavations of the new river channel, as well as assisting with fish rescues within the coffer dams. Project permits include Biological Opinions from National Marine Fisheries Service and California Department of Fish and Wildlife Incidental Take Permits for steelhead (Central California Coast DPS), Delta smelt, and longfin smelt.

Marin County Department of Public Works Flood Control Line Replacement, San Rafael, California 2013
The Marin County Department of Public Works manages flood control projects throughout the county, including the city of San Rafael. The project consists of replacing an aging flood diversion pipe in a low-lying residential area adjacent to the south fork of Gallinas Creek. The project area is located in a salt marsh slough and has known populations of California clapper rail and salt-marsh harvest mouse. Patricia was a USFWS-approved biological monitor for the project and has monitored construction to ensure compliance with the project's regulatory permits. Several California clapper rails were observed at short range and within the project area, and Patricia stopped work activities until the birds had safely left of the own volition.

Fitzgerald Marine Reserve Coastal Trail, San Mateo County, California 2012 – 2013
The Fitzgerald Marine Reserve project includes the design of a portion of the California Coastal Trail in San Mateo County, California. Major components of the project, in addition to the multi-use trail, included a free span pedestrian bridge and improved beach access and overlook. WRA provided environmental services in support of the proposed trail and public access improvements, and existing sensitive habitats were avoided to the extent possible in the public access design. WRA prepared the conceptual designs for the trail and improved access to the overlook and beach, performed wetland delineations, completed biological surveys, and prepared permit applications. As part of this process, Patricia was approved by the U.S. Fish and Wildlife Service under the Biological Opinion for the project to perform the pre-construction surveys and monitoring for San Francisco gartersnake and California red-legged frog. In addition, she provided advice on the design and materials for the wildlife exclusion fence, and oversaw its installation.

Nicholas Brinton, BS
Fisheries Biologist
brinton@wra-ca.com
o: 415.454.8868 x1780
c: 909.275.2358

Years of Experience: 3

Education
BS Wildlife, Fish and Conservation Biology, UC Davis, 2012

Professional Affiliations/ Certifications

American Fisheries Society

Nick holds a B.S. degree in Wildlife, Fish and Conservation Biology from the University of California, Davis. His coursework included ichthyology, mammalogy, ornithology, waterfowl and wetland management, population dynamics and invasive plant ecology.

Prior to joining WRA, Nick worked as a biological monitor on a transmission line project where he gained experience working with California tiger salamander, western spadefoot toad and nesting birds. In addition, he worked for two years as a Fisheries Technician in both the private and public sector. His work primarily revolved around population monitoring, invasive species removal, water quality and habitat assessments. He has worked extensively with Lahontan cutthroat trout and native species of the Sierra Nevada Mountains. Nick has also worked with the UC Davis Museum of Wildlife and Fish Biology and performed a cursory study on small mammal distribution throughout the state of North Dakota. He conducted live-trapping and collected specimens for the museum. The data collected was presented to the museum and the Smithsonian Institute in support of follow-up studies.

With WRA, Nick conducts fish salvages, habitat assessments, biological monitoring, focused wildlife surveys, and writes biological assessment reports. He has trained with Rob Schell, a U.S. Fish and Wildlife Service Recovery Permit holder for California red-legged frog (CRLF); Jason Yakich, Recovery Permit holder for California clapper rail (CCR); and Kate Allan, Recovery Permit holder for salt marsh harvest mouse (SMHM).

Representative Projects

Amy's Kitchen, Rohnert Park, California, 2014 – Present
During construction of facilities for Amy's Kitchen in Rhonert Park, Nick was approved by CDFW as a biological monitor for California tiger salamander (CTS). During the course of the project, Nick monitored for environmental compliance at the site to assure that there was no take of covered species during construction. To date, no take of CTS has occurred.

Port of Richmond Inner Harbor Maintenance Dredging, Richmond, California 2014 – 2015
Maintenance dredging for the Port of Richmond Inner Harbor Channel was conducted in the winter of 2014 to maintain passageways for ships entering the port. Pacific herring is a protected fishery, and dredging operations within the harbor overlapped with the Pacific herring spawning season. Nick was an approved California Department of Fish and Wildlife observer for the Project. During operations, one spawning event occurred within the Project Area. Nick observed the spawning event and informed crews on the required buffers to maintain compliance. All Project activities were completed in compliance with the Project's Pacific Herring Work Window Waiver.

Mare Island Ship Yard Dry Dock Fish Salvage, Vallejo, California 2014, - Present
Mothballed vessels from the National Defense Reserve Fleet in Suisun Bay and private ships needing repair are brought to the dry docks at the former Mare Island Naval Shipyard. In accordance with permit requirements of USFWS, National Marine Fisheries Service (NMFS), and CDFW, biologists are required to be present during final stages of dewatering to salvage (rescue) stranded fish from the dry dock. Captured fish are placed in aerated holding coolers, identified to species, counted and measured before being returned to the Mare Island Channel of the Napa River. Nick is a lead fisheries biologist for this operation. He is responsible for leading a team of biologists who conduct salvage operations. He also coordinates with resource agency personnel, ensuring permit compliance, and writes technical reports following each salvage event. He is authorized to handle and relocate longfin smelt, Delta smelt, steelhead, Chinook salmon and green sturgeon at this site. This project is ongoing.

Healdsburg Veterans Memorial Dam Spillway Repair, Healdsburg, California, 2014
The Healdsburg Veterans Memorial Dam is a flashboard dam located within the city of Healdsburg on the Russian River. The dam is installed seasonally to create a temporary recreational lake. For this project, Nick was approved as the lead fisheries biologist, and biological monitor. He conducted pre-construction surveys for breeding birds as well as pacific pond turtle (PPT), and positively identified PPT in the project area. As the lead fisheries biologist he lead a team of biologists who performed multiple fish salvages within the project area following de-watering events. His team successfully identified, and safely re-located steelhead that were salvaged during the dewatering. Nick also conducted biological monitoring for PPT and special-status fish throughout the duration of the project to ensure that project activities were in compliance with agency permits. He conducted pre-construction checks, environmental trainings, and water temperature monitoring. The project was completed in compliance with relevant permits with no take of any special-status species.

Frenchman's Creek Water District, San Mateo County, 2013 - Present
Frenchman's Creek Water District (FCWD) is a small water service provider located north of Half Moon Bay along coastal San Mateo County. A CDFW 1602 permit allows for the temporary installation of a flashboard dam and water withdrawal from the system. Nick serves as a fisheries biologist for this project, which involves monitoring flow and habitat conditions for steelhead during the diversion period, permit compliance, and annual reporting. This project is currently ongoing.

Napa Dry Bypass, Napa, California, 2014 - Present
The Napa Dry Bypass is designed to divert 100 year flows around the oxbow reach of the Napa River to avoid flooding the Soscol Gateway area in downtown Napa. Nick has been approved as a lead fisheries biologist on this project and has conducted multiple fish salvage operations for longfin smelt, and steelhead. Nick also assisted in the otter trawl surveys and fish exclusion work which were required during impact hammer pile driving operations. He has also been involved with this project by monitoring compliance and construction activities including impact hammer pile driving. In addition, he assisted in the design and implementation of the environmental awareness training program to comply with both the streambed alteration agreement and incidental take permits. This project is ongoing.

Pristine Sun Solar Projects Pre-construction Surveys, California, 2014-Present
WRA was contracted to implement environmental compliance measures for several Pristine Sun projects. Projects involved creating 0.5-1 MW solar generation facilities in Glenn, and Shasta Counties. As part of these measures, Nick performed pre-construction surveys for Swainson's hawk, white-tailed kite, long-eared owl, burrowing owl, and breeding birds at two sites.

ROB SCHELL, BS

Wildlife Biologist

schell@wra-ca.com

o: 415.454.8868 x1490

c: 530.220.9622

Years of Experience: 12

Education

BS Evolution and Ecology, University of California: Davis

Professional Affiliations/ Certifications

USFWS 10(a)1(A) Recovery Permit #TE-212445-2

- California red-legged frog
- California tiger salamander
- Vernal pool branchiopods

California Department of Fish and Game Scientific Collecting Permit #SC-7966

- Bats
- CESA Herps
- California tiger salamander

Amphibian Population Task Force

Western Bat Working Group

Specialized Training

40-Hour HAZWOPER Certification

Transportation Worker Identification Credential (TWIC)

Rob Schell has more than 12 years of experience both managing and performing key technical roles in dozens of projects throughout California. In his role at WRA, Rob works alongside his clients to come up with efficient and cost effective solutions to complex and diverse environmental challenges. Most recently, Rob has been the lead wildlife biologist on multiple conservation banking projects. In tandem with WRA's Senior Project Managers, his work has led to the preservation of thousands of acres of habitat for threatened and endangered species.

Rob is a herpetologist and ecologist by training. He is considered an expert on the California red-legged frog, which he is currently undertaking a first of its kind translocation. Rob also has extensive experience with California tiger salamander and vernal pool branchiopods, for which he also holds federal recovery permits. Rob also is permitted to handle bats and CESA-listed reptiles and amphibians throughout California. Additionally, he performs surveys and assessments for many other special status species including bats.

Representative Projects

Callippe Preserve, Pleasanton, California 2009 – 2015

The Callippe Preserve was established as mitigation for the construction of the Pleasanton Municipal (Callippe) Golf Course. As a component of the wildlife management plan and USFWS Biological Opinion, Rob has annual sampling for California tiger salamander (CTS), and required predator monitoring and removal within the Preserve Conservation Areas.

In 2009, Rob discovered a new population of California red-legged frog (CRLF) within Preserve Conservation Area Pond 11. Removal of invasive aquatic predators continued throughout 2009 and 2010, leading to documented breeding of CRLF in 2010. In the Fall of 2010, Rob, with approval of the USFWS and the landowner, dewatered the pond to completely rid it of bass and bullfrogs. Monitoring is ongoing, however the CRLF breeding population now numbers in excess of 12 adults and reproductive success has been documented in 2012 and 2013. The expanding CRLF population at Callippe Preserve colonized the golf course irrigation ponds in 2011. Additionally in 2011 CTS larvae and metamorphs were captured at Pond 11 for the first time since monitoring began in 2003.

In the fall of 2013, non-native predatory fish were detected in the golf course irrigation ponds. Rob led the effort, in conjunction with golf course staff, to drain the ponds and eradicate the fish in compliance with the USFWS Biological Opinion and associated management plans. CRLF were released back into the irrigation ponds as soon as refilling resumed.

Since WRA's involvement, the CRLF population at the Callippe Preserve has increased twenty-fold and has reached self-sustaining levels of reproduction. WRA will continue to assist the Golf Course on an as-needed basis following the completion of monitoring in 2014.

Midnight Sun Inc. II, Gaver Ranch, Monterey County, California 2014 –Present
Gaver Ranch is an approximately 342-acre agricultural site located in unincorporated Monterey County outside the community of Castroville, California. The Project consists of three components related to the on-going agricultural activities on the Project. The first component entails the restoration of an unnamed tributary to Moro Cojo Slough, removal of excessive accumulated sediments, and replanting of native vegetation (Restoration Activities) to comply with a Stipulated Final Judgment. The second component involves a number of additional channel modifications including construction of strategically placed detention basins, catchments, and check dams to control erosion, capture and retain sediment and storm water, and to prevent on and off-site flooding. The third component involves on-going, long-term maintenance of sediment and vegetation, as well as emergency response activities.

Rob is the Project Manager and concurrently the designated representative and designated biologist under the CDFW Incidental Take Permit No. 2081-2015-023-04. He is currently responsible for overseeing compliance monitoring, and construction management associated with all three Project components. His role includes agency and client coordination and correspondence, oversight of engineering, construction and labor, Project staffing, and direct oversight of Project activities.

Vulcan Materials Company, Pilarcitos Quarry Biological Surveys, San Mateo County, California 2012 –Present
The Pilarcitos Quarry is a 53-acre aggregate mining facility located on approximately 593 acres just east of the town of Half Moon Bay in rural San Mateo County. As part of the planned expansion and ongoing operations, and in compliance with the USFWS Biological Opinion (81420-2008-F-0294-1), Vulcan, placed a conservation easement on 192.5 acres of the northern portion of the property, and constructed two mitigation ponds to provide habitat for federally listed California red-legged frog (CRLF) and San Francisco garter snake (SFGS). Rob was responsible for the compliance of the USFWS conservation measures and CDFW Streambed Alteration Agreement during the construction of the mitigation ponds.

Rob is the USFWS Authorized Biologist for the Project. In that capacity he was the lead biologist during the construction phase of the mitigation ponds and during sediment removal of operational sedimentation basins within the active quarry. Rob oversaw the biological monitoring, documentation of permit compliance and post-construction reporting. Several CRLF were documented and relocated in compliance with permit conditions. Construction of the mitigation ponds was completed in 2013. Rob continues working with the quarry to maintain permit compliance and perform monitoring of sensitive biological resources on-site.

Santa Clara County Bridge Scour Repair, Santa Clara County, California
Twelve bridge locations within Santa Clara County were identified by Caltrans as having critical abutment scour necessitating repair. The Santa Clara County Roads and Airports Department, with funding from Caltrans, is completing the repairs, working with the Caltrans Office of Local Assistance. During the construction phase of this project, Rob has been part of a team of WRA biologists with expertise in the ecology, identification and field survey techniques of California red-legged frog, California tiger salamander, steelhead and least Bell's vireo. To ensure compliance with the regulatory permits, Rob performed pre-construction surveys for California red-legged frog, California tiger salamander and least Bell's vireo, he conducted environmental awareness training for construction personnel, and he monitored construction activities to prevent take of special status wildlife species.

Oak Knoll Naval Hospital, Oakland, California 2007 – 2010
The Former Oak Knoll Naval Hospital Site is a residential redevelopment project on over 100 acres in Oakland, California. Rob has conducted breeding bird surveys for vegetation and tree removal activities and has conducted bat roosting surveys in over 80 buildings slated for removal or remediation. In consultation with California Department of Fish and Game (CDFG), bat boxes have been installed to mitigate for impacts to roosting bats.

Cakebread Cellars Arroyo Creek Winery, Napa, California 2008 – 2009
Arroyo Creek winery is located in the hills southeast of Napa, California. The site is primarily composed of mixed Oak woodland and non-native grassland. Rob led pre-construction roost emergence surveys using night vision equipment and ultrasonic acoustic surveys, using Pettersson D240x detectors for tree roosting bats prior to the conversion of non-native grassland to vineyards. Several bat roosts were detected and four species of bats were identified including: California Myotis, Long-eared Myotis, Yuma Myotis and Small-footed Myotis. Through use of buffers and avoidance techniques, no active roosts were disturbed during the construction process.

Caltrans Baseline Bridge Surveys and Occupancy Modeling for Bats, Ventura County, California September – November 2005
California Department of Transportation manages 316 bridges in Ventura County and initiated a pilot study to determine occupancy of bats at all bridge sites. Bridges were ranked based on general categories of construction date, construction materials and design, urban/rural setting and the type of facility the bridge passes over (i.e. highway or waterway). Bridges were ranked into high, moderate or low potential for bat occupancy. Thirty of the 150 bridges evaluated in the field were found to have bat sign, 25 of which were categorized as high potential bridges in the initial evaluation. Rob assisted with both daytime and nighttime surveys conducted at 26 bridges using a combination of Anabat II ultrasonic acoustic detectors and periodic light sweeps. Over 6,600 acoustic calls were analyzed identifying seven bat species. This information was presented to Caltrans to manage bat occupied bridges in the future and determine seismic renovation priority.

Ridge Top Ranch Wildlife Conservation Bank, Solano County, California 2010-Present
WRA and Ridge Top Ranch, LLC (RTR) are in the process of developing over 750 acres of high quality California red-legged frog (CRLF) and callippe silverspot butterfly mitigation habitat located within Solano County, California. Rob authored a peer reviewed proposal to translocate CRLF into restored ponds within RTR under the authority of his federal 10(a)(1)(A) Recovery Permit TE-212445-1. In 2012 and 2013, Rob led a team to successfully translocate CRLF to the RTR Wildlife Conservation Bank. Rob has been involved throughout the process, from selecting the donor sites and planning habitat creation, to performing due diligence CRLF population and chytrid studies up to the translocation of egg masses and post-translocation monitoring of CRLF to ensure that establishment at the receiving site is successful. Ongoing population includes performing visual population counts of CRLF, as well as performing mark-recapture surveys to monitor the growth, demographics and breeding status of CRLF. Monitoring at this site is ongoing, and the Conservation Bank was granted final approval in 2014. Rob has given three presentations at Regional and National Scientific Conferences based upon his original research at RTR.

Lucky Day Ranch, Gilroy, California 2007 – Present
The Lucky Day Ranch is a diverse 2000-acre property located in Santa Clara County consisting of oak woodlands, valley and foothill grasslands, serpentine outcrops, sage scrub, and a large wetland complex. Rob has conducted CTS population monitoring under the authority of his Federal Recovery Permit at the on-site breeding ponds since 2009. Rob has handled approximately 25 adult and larval CTS during these monitoring efforts.

This page intentionally left blank

Proposed Spruce Road Bridge

BPMP Project

Natural Environment Study

Spruce Road Bridge BPMP

Town of Fairfax, Marin County

Bridge Number: 27C 0141

Project Number: BPMP 5277 (026)

Locator: [District 4]-[MRN]-[0]-[FRFX]

September 2017

Caltrans
CALIFORNIA DEPARTMENT OF TRANSPORTATION

Proposed Spruce Road Bridge
BPMP Project
Natural Environment Study

STATE OF CALIFORNIA
Department of Transportation
Town of Fairfax
BPMP 5277 (026)

Prepared By: Micki Kelly Date: 9/8/2017
Micki Kelly, PWS, Principal
415-482-9703
Kelly Biological Consulting
San Anselmo, CA

Prepared By: Patricia Valcarcel Date: 9/15/17
Patricia Valcarcel, Wildlife Biologist
415-524-7542
WRA, Inc.
San Rafael, California

Approved By: Garrett Toy Date: 9/13/17
Garrett Toy, Town Manager
415-453-1584
Town of Fairfax
Fairfax, California

Recommended for Concurrence by (Caltrans): _____ Date: _____
Hugo Ahumada, Associate Environmental Planner
510-622-8790
Office of Local Assistance District 4
Caltrans, District 4
Oakland, California

Concurred By: _____ Date: _____
Thomas Holstein, Environmental Branch Chief
510-286-6371
Office of Local Assistance
Caltrans, District 4
Oakland, California

For individuals with sensory disabilities, this document is available in Braille, large print, on audiocassette, or computer disk. To obtain a copy in one of these alternate formats, please call or write to Caltrans, Attn: Local Assistance, District 4, 111 Grand Avenue, Oakland, California 94623; (510) 286-6371 Voice, or use the California Relay Service (800) 735-2929 (TTY), (800) 735-2929 (Voice) or 711.

This page intentionally left blank

Summary

Purpose and Need.

Caltrans determined that Spruce Road Bridge over Fairfax Creek, in Fairfax needs preventative maintenance work. The purpose of conducting the repair work is to extend the life of the bridge.

Project Description

Spruce Road Bridge is one of three bridges included in the Fairfax BPMP Project. This Natural Environmental Study (NES) only addresses Spruce Road Bridge. The other two bridges are covered by separate NES documents. Spruce Road Bridge highly skewed bridge is a single span concrete T-beam structure over Fairfax Creek, presumed to have been constructed circa 1930, although the exact age of the bridge is unknown. The bridge is in a residential area of the town of Fairfax. The structure is approximately 22 feet long and 37 feet wide. It supports two lanes of traffic and two 5'-wide sidewalks and concrete railings nearly 12 feet above the creek bed. There are no as-built plans available from the original construction of the bridge, but a new General Plan from field measurements has been developed for the bridge. The bridge is not eligible for NRHP listing. It has a Sufficiency Rating of 53.9, but is not flagged as either Structurally Deficient (SD) or Functionally Obsolete (FO) in the latest Caltrans Bridge Inspection Report (from 2016 inspections).

The BPMP repairs for Spruce Road Bridge will consist of:

- Sealing of the deck - The asphalt concrete on the bridge deck will be removed with a specialized asphalt grinder. After cleaning the deck and repairing any unsound concrete, work will be followed by the application of the concrete sealant methacrylate. The sealant is applied with a mop throughout the deck and sprinkled with a light layer of sand for better tire grip while it is still tacky. Sealing the deck will be followed by application of polyester concrete overlay. The latter is dumped on the deck from a special polyester concrete mix truck, spread, leveled and broom-finished to proper deck grades by concrete finishers.
- Repair of expansion joints - The rubber bridge expansion joint seals at each end will also be replaced and the new concrete deck grades at the ends of the bridge transitioned to the asphalt surface on the approach roadways within 10 feet of the ends of the bridge.
- The numerous bridge soffit spalls in the structural members will be cleaned up and patched with special epoxy grout. The work under the bridge will be done using a "snooper" truck lift parked on the deck, eliminating the need for scaffolding or working in the creek.

The work will be done entirely from the bridge deck and street level without being in the creek. The work is expected to take as many as ten working days from start to finish. The bridge will be closed off to motorized traffic for a number of hours a few times during this period but will remain open to foot traffic on the sidewalks. Motorized traffic will be detoured around the neighborhood during the temporary closures.

Habitat Impacts

The proposed project will temporarily impact approximately 600 square feet (0.01 acre) of Ruderal Disturbed/Developed lands.

Special-Status Species

The proposed project will not adversely affect special-status plants, special-status wildlife, or nesting birds. Pre-construction nesting bird surveys will be conducted if the proposed project begins during the nesting bird season (February 15 through August 15). The proposed project will result in temporary impacts to developed habitats only and no in-water work is to occur. Pacific Salmonid Essential Fish Habitat (EFH) is present within the BSA; however, no work will occur within the creek bed. The proposed project will have **no effect** on EFH. Consultation with National Marine Fisheries Service (NMFS) will not be required to assess impacts of the proposed project on EFH. If the construction methods change such that work within the creekbed is necessary, then consultation would be required.

Invasive Species

The species found in the BSA that are listed on the California Invasive Plant Council (Cal-IPC) list as High are English ivy (*Hedera helix*), French broom (*Genista monspessulana*), Himalayan blackberry (*Rubus armeniacus*), and fennel (*Foeniculum vulgar*). Several species with moderate rating were also observed, big-leaf periwinkle (*Vinca major*), wild oats (*Avena fatua*), and panic veldtgrass (*Ehrharta erecta*).

No work is expected in the natural areas. During construction any French broom individuals within the BSA and adjacent to the work area will be removed. English ivy, Himalayan blackberry, and big-leaf periwinkle, wild oats, panic grass will be more difficult to eradicate given that they are common upstream, and downstream of the BSA. The proposed project will remove individuals of those species in or adjacent to the work area.

New Zealand mud snail (NZMS; *Potamopyrgus antipodarum*) are documented within San Anselmo Creek near the confluence with Fairfax Creek, and are likely present within Fairfax Creek. Measures such as washing equipment operated below the road surface or bridge deck are included here to avoid the spread of the mud snail. The proposed project would not result in the spread of invasive species through the implementation of the avoidance and minimization efforts discussed in this document.

Resource Permits

There will be no impacts to the Perennial Stream (i.e. “other waters” or ‘Waters’) or the Riparian Woodland. A California Department of Fish and Wildlife (CDFW) Streambed Alteration Agreement (CFGC 1602), Regional Water Quality Control Board (RWQCB) Clean Water Act (CWA) 401 certification, and U.S. Army Corps of Engineers (USACE) CWA 404 nationwide permits will not be required.

Table of Contents

Summary i
Chapter 1 – Introduction 1
Chapter 2 – Study Methods 7
Regulatory Requirements 7
Wetland and Waters 7
Invasive Species 9
Protected Species 9
Local Policies and Ordinances 11
Studies Required 11
Personnel and Survey Dates 13
Agency Coordination and Professional Contacts 13
Limitations That May Influence Results 13
Chapter 3 – Results: Environmental Setting 15
Existing Biological and Physical Conditions 15
Biological Study Area 15
Physical Conditions 15
Biological Conditions in the BSA 16
Invasive Species 19
Regional Species and Habitats and Natural Communities of Concern 19
Chapter 4 – Results: Biological Resources, Discussion of Impacts and Mitigation 59
Habitats and Natural Communities of Special Concern 59
Riparian Redwood Forest 63
Perennial Stream (“Other Waters”) 63
Special-Status Plant Species 64
Special-Status Wildlife Species 69
Special-Status and non-Special-Status Nesting Birds 70
Chapter 5 – Conclusions and Regulatory Determinations 73
Federal Endangered Species Act Consultation Summary 73
Essential Fish Habitat Consultation Summary 73
California Endangered Species Act Consultation Summary 73
Wetlands and Other Waters Coordination Summary 73
Invasive Species 73
Other 73
Chapter 6 – References 74

List of Figures

Figure 1. Biological Study Area Location Map 3
Figure 2. Proposed Bridge Plan 5
Figure 3a. Biological Communities within the Biological Study Area.....17
Figure 3b. Biological Communities Impacted within the Biological Study Area 61
Figure 4. Special-Status Plant Species within 5 kilometers (3 miles) of the Biological Study Area 65
Figure 5. Special-Status Wildlife Species within 8 kilometers (5 miles) of the Biological Study Area 67

List of Tables

Table 1: Listed, Proposed Species, and Critical Habitat Potentially Occurring or Known to Occur in the BSA.....21
Table 2: Proposed Project Direct Impacts to Natural Communities of Special Concern. 59
Table 3: Proposed Project Direct Impacts to Jurisdictional Areas by Agency. 59

List of Appendices

Appendix A – Plant and Wildlife Species Observed during the Site Visits
Appendix B – USFWS Official Species List
Appendix C – Preparers Qualifications

Chapter 1 – Introduction

Purpose and Need

Caltrans determined that Spruce Road Bridge, in the Town of Fairfax (Town) over Fairfax Creek requires preventative maintenance work (discussed below). The purpose of conducting the repair work is to extend the life of the bridge.

Background on Proposed Fairfax BPMP (Multi-bridge) Project

The entire Fairfax BPMP (Multi-bridge) Project consists of three existing bridges proposed to undergo preventive maintenance repairs through the HBP's Bridge Preventive Maintenance Program (BPMP). Two of the bridges, on Marin Road and Spruce Road, are within a few blocks of each other, while the third creek crossing, Canyon Road Bridge, is approximately 2.35 miles away from the other two. This NES addresses Spruce Road Bridge. The other two bridges have separate NES documents.

For bridges that require work in the creek, it would be done during the dry season and the environmentally permissible window when these segments of the waterway are at their lowest flow rates. The work area would be dewatered by temporarily diverting any potential flows from the work area, using means such as short dams made with sand bags, and/or longitudinal piping to bypass the work areas. Stagnant water would be pumped out to create a completely dry work area. Best Management Practice (BMP) measures and a Water Quality Protection Plan would be implemented throughout the work period. Old debris and drift would be removed from the waterway. Water quality and turbidity would be controlled by the contractor and periodic tests required by the permits would be performed.

No trees would be cut for the construction operations. However, limited trimming and cutting of vegetation around the worksite, as well as clearing and grubbing, are expected. For application of methacrylate and polyester concrete, the contractor would be required to conform to the recommendations of a certified industrial hygienist for safe worksite operations. Hours of operations would be limited to regular daylight work hours, but at least one nighttime operation may be expected.

Most of the various construction equipment used at the three sites would be relatively compact, including air compressors, generators, a shot blaster, shotcrete pumps and hoses, concrete saws, concrete chipping guns and drills, and soil drilling equipment. Construction vehicles moving in and out of the construction area would be a small loader, such as a Bobcat with backhoe or bucket attachments, polyester concrete mix truck, paver, roller, small excavator, a cold planing machine, snooper lift truck, utility pickup trucks, flatbed trucks, dump trucks, dump trailers, a truck-mounted crane, concrete delivery trucks and a testing van. These vehicles and equipment would not be all at the site at the same time but move in and out, and would be staged within the APEs, as needed. No new easement or temporary or permanent right-of-way (ROW) would be necessary. Also, no utility relocations would be necessary for the work on any of the three bridges. All access to the project and staging areas would be via the areas within the APEs. Equipment, large or small, would be lowered onto the creek bed with a truck-mounted crane to avoid ramping from the top to the creek bed for vehicles. Work would be taking place both from the bridge topside as well as down below in the creek at two locations (Marin and Canyon). The operations would be done manually, as well as with power equipment. Rocks for riprap would also be lowered one by one onto the needed areas with a crane.

Proper signage, indicating construction ahead and any road closure, would be installed at all three sites on both sides of each bridge.

Project Description for the Proposed Spruce Road Bridge

Spruce Road Bridge is one of three bridges included in the proposed Fairfax BPMP Project. This NES only addresses Spruce Road Bridge. The other two bridges are covered by separate NES documents. The Spruce Road Bridge is a highly skewed bridge, with a single span concrete T-beam structure over Fairfax Creek, presumed to have been constructed circa 1930, although the exact age of the bridge is unknown. The bridge is in a residential area of the Town of Fairfax. The structure is approximately 22 feet long and 37 feet wide. It supports two lanes of traffic and two 5'-wide sidewalks and concrete railings nearly 12 feet above the creek bed. There are no as-built plans available from the original construction of the bridge, but a new General Plan (GP) from field measurements has been developed for the bridge. The bridge is not eligible for NRHP listing. It has a Sufficiency Rating (SR) of 53.9, but is not flagged as either Structurally Deficient (SD) or Functionally Obsolete (FO) in the latest Caltrans BIR (from 2016 inspections).

The Spruce Road Bridge Biological Study Area (BSA) is shown in Figure 1. The plans are provided in Figure 2.

The BPMP repairs for Spruce Road Bridge will consist of:

- Sealing of the deck - The asphalt concrete on the bridge deck will be removed with a specialized asphalt grinder. After cleaning the deck and repairing any unsound concrete, work will be followed by the application of the concrete sealant methacrylate. The sealant is applied with a mop throughout the deck and sprinkled with a light layer of sand for better tire grip while it is still tacky. Sealing the deck will be followed by application of polyester concrete overlay. The latter is dumped on the deck from a special polyester concrete mix truck, spread, leveled and broom-finished to proper deck grades by concrete finishers.
- Repair of expansion joints - The rubber bridge expansion joint seals at each end will also be replaced and the new concrete deck grades at the ends of the bridge transitioned to the asphalt surface on the approach roadways within 10 feet of the ends of the bridge.
- The numerous bridge soffit spalls in the structural members will be cleaned up and patched with special epoxy grout. The work under the bridge will be done using a "snooper" truck lift parked on the deck, eliminating the need for scaffolding or working in the creek.

The work will be done entirely from the bridge deck and street level without being in the creek. The work is expected to take as many as ten working days from start to finish. The bridge will be closed off to motorized traffic for a number of hours a few times during this period but will remain open to foot traffic on the sidewalks. Motorized traffic will be detoured around the neighborhood during the temporary closures.

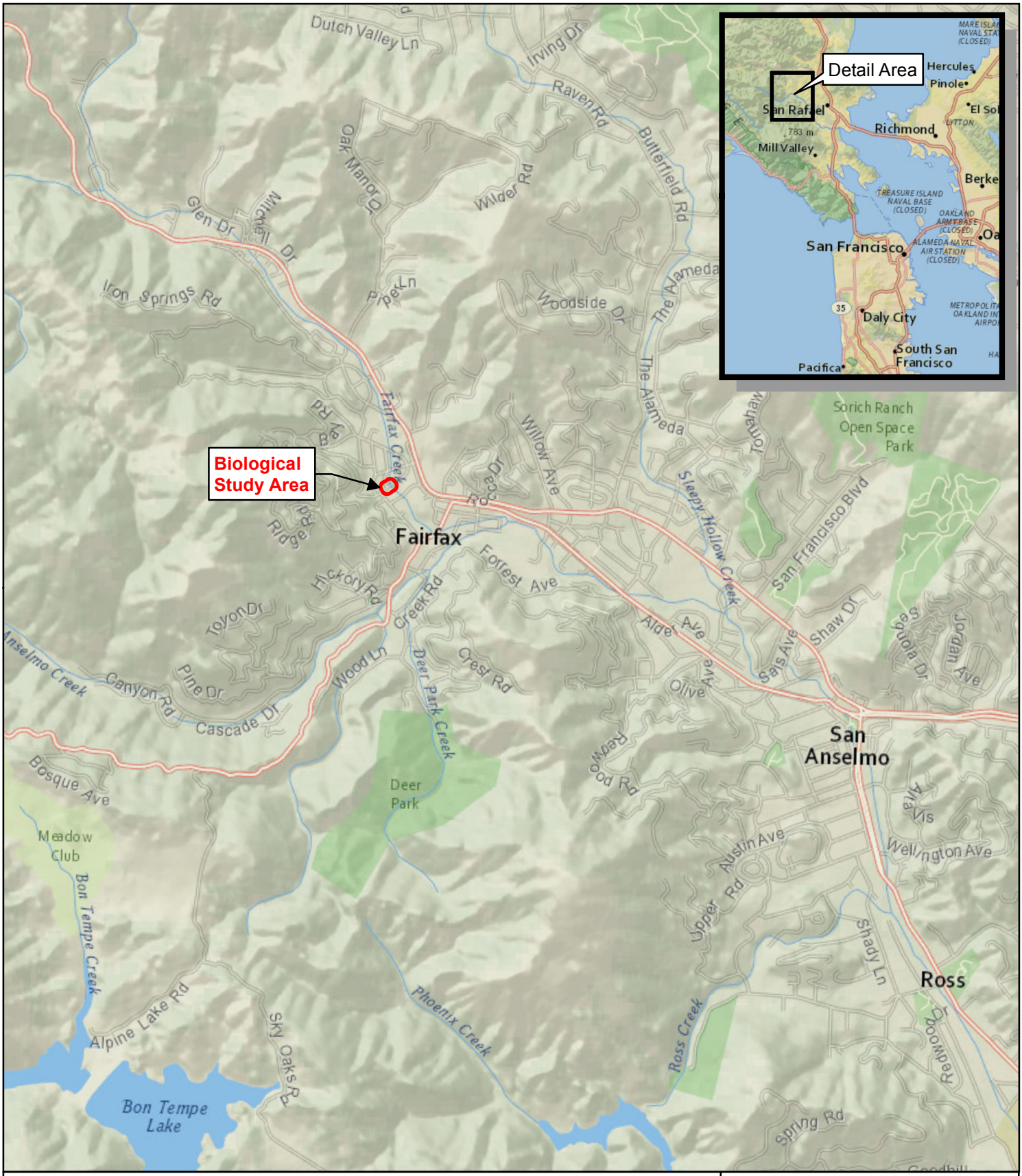

Figure 1. Biological Study Area Location Map

N
W E
S

Bridge Preventative Maintenance Program
Spruce Road Bridge NES
Marin County, California

0 2,000 4,000
Feet

wra
ENVIRONMENTAL CONSULTANTS

Map Prepared Date: 3/29/2016
Map Prepared By: dchan
Base Source: Esri Streaming - NAIP 2014
Data Source(s): WRA

Path: L:\Acad 2000 Files\22000\22304\GIS\ArcMap\BPMP\Spruce Road Bridge\Fig1_Spruce_LocMap_20160329.mxd

This page intentionally left blank

Figure 2. Proposed Spruce Road Bridge General Plan

DIST	COUNTY	ROUTE	POST MILES TOTAL PROJECT	SHEET NO.	TOTAL SHEETS
04	Mrn				XX

REGISTERED CIVIL ENGINEER

PLANS APPROVAL DATE

REGISTERED PROFESSIONAL ENGINEER
NADER TAMANNAIE
NO. 37289
EXP. 6/30/16
CIVIL
STATE OF CALIFORNIA

930 ALHAMBRA BLVD. SUITE 220
SACRAMENTO, CA 95816

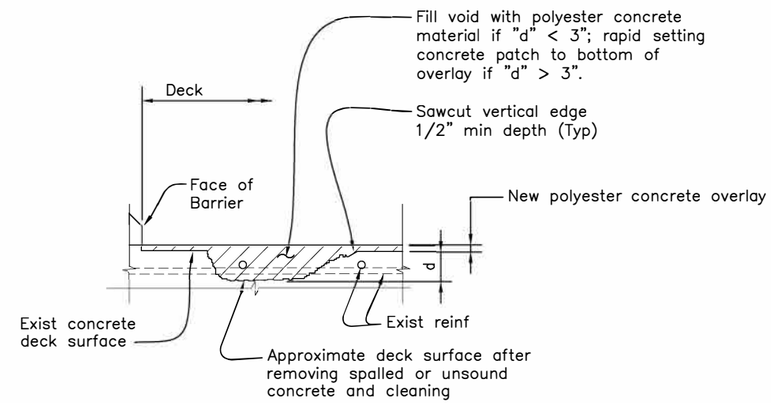

UNSOUND CONC REPAIR DETAIL
No Scale

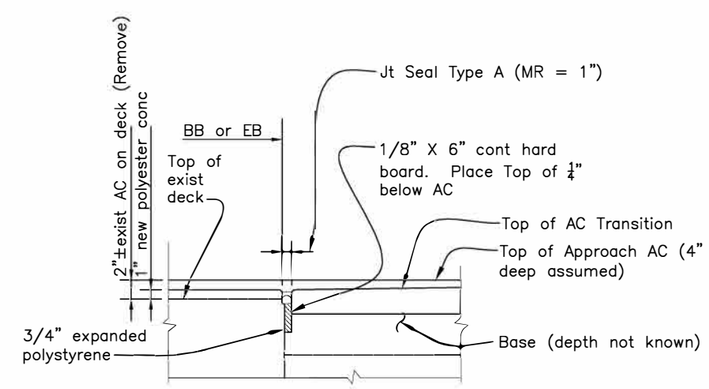

B6-21 SECTION THRU ABUTMENT – JT SEALS DETAILS
Scale: 1-1/2"=1'-0"

NOTE:

The contractor shall verify all controlling field dimensions before ordering or fabricating any material.

DESIGN OVERSIGHT	DESIGN	BY N. Tamannaie	CHECKED	LOAD & RESISTANCE FACTOR DESIGN	LIVE LOADING: HL93 AND PERMIT DESIGN VEHICLE	
SIGNOFF DATE	DETAILS	BY J. Caravalho	CHECKED	LAYOUT	BY N. Tamannaie	CHECKED
	QUANTITIES	BY	CHECKED	SPECIFICATIONS	BY	PLANS AND SPECS COMPARED

PREPARED FOR THE
TOWN OF FAIRFAX
DEPARTMENT OF PUBLIC WORKS

Nader Tamannaie, PE
PROJECT ENGINEER

BRIDGE No. 27C-0144
POST MILE --

SPRUCE ROAD BRIDGE (BPMP)
REPAIR DETAILS

DS OSD 2138 (CADD 4/89)

ORIGINAL SCALE IN INCHES FOR REDUCED PLANS 0 1 2 3

CU
EA
CONTRACT NO.

DISREGARD PRINTS BEARING EARLIER REVISION DATES

REVISION DATES (PRELIMINARY STAGE ONLY)

SHEET 14 OF

This page intentionally left blank

Chapter 2 – Study Methods

The Town's consultants, Kelly Biological Consulting's Micki Kelly, PWS, plant ecologist and WRA's fish and wildlife biologists Dan Chase, Rob Schell, and Nick Brinton conducted biological resources studies in the Fall/Winter and Spring/Summer of 2014, 2015, and 2016 including a biological resources assessment, special-status plant surveys, and a delineation of Section 404 jurisdictional areas within the proposed Spruce Road Bridge BPMP Project Biological Study Area (BSA) in the Town of Fairfax, Marin County, California. The BSA was examined on foot to determine (1) vegetation communities present, (2) if existing conditions provide suitable habitat for any special-status plant or wildlife species that have a potential to occur within the vicinity of the BSA, and (3) the presence of potential jurisdictional wetlands and "other waters" within the BSA. The BSA biological communities and impact areas are shown in Figures 3a and 3b. The special-status species that are known to occur in the vicinity of the Biological Study Area are listed in Table 1 and mapped in Figures 4 and 5. The regulatory framework under which the assessment was conducted and the methods used to conduct the assessment are described in the following section.

Regulatory Requirements

National Environmental Policy Act

The National Environmental Policy Act (NEPA) of 1969 provides a framework which federal agencies must follow in evaluating environmental impacts of their actions. Actions by federal agencies must "use all practicable means and measures" to avoid or lessen impacts to the environment. In 2007, formal guidance for the continuation of a pilot program was issued which allows Caltrans to assume all of the Federal Highway Administration (FHWA) environmental responsibilities under NEPA and other environmental laws (NEPA Delegation). This delegation authority is limited to highway projects, including Local Assistance Federal Aid projects, and specific projects within the State or a programmatic delegation. Therefore, Caltrans must ensure joint projects with FHWA or projects funded with Federal Aid are in compliance with NEPA.

WETLAND AND WATERS

Section 10 of Rivers and Harbors Act of 1899

The Rivers and Harbors Act requires permits in navigable waters of the U.S. for all structures such as riprap and activities such as dredging. The term navigable waters of the United States and all other terms relating to the geographic scope of jurisdiction are defined at 33 CFR part 329. Generally, they are those waters of the United States that are subject to the ebb and flow of the tide shoreward to the mean high water mark, and/or are presently used, or have been used in the past, or may be susceptible to use to transport interstate or foreign commerce. The United States Army Corps of Engineers (USACE) grants or denies permits based on the effects on navigation. Fairfax Creek is a tributary to Corte Madera Creek, which is only considered navigable below the College of Marin, approximately 4 miles downstream of the site (http://www.spn.usace.army.mil). Therefore, this creek is not considered a navigable water subject to the Rivers and Harbors Act.

Clean Water Act (CWA)

The CWA provides guidance for the restoration and maintenance of the chemical, physical, and biological integrity of the nation's waters. Section 404 identifies the United

States Army Corps of Engineers (USACE) jurisdiction over fill materials in essentially all water bodies, including wetlands. All federal agencies are required to avoid impacts to wetlands whenever there is a practicable alternative. Section 404 established a permit program administered by USACE regulating the discharge of dredged or fill material into Waters of the US (including wetlands).

Section 401of the CWA requires that an applicant for a federal license or permit that allows activities resulting in a discharge to Waters of the U.S., obtain a state certification that the discharge complies with other provisions of CWA. The Regional Water Quality Boards (RWQCB) administers the certification program in California. The guidelines allow the discharge of dredged or fill material into the aquatic system only if there is no practicable alternative that would have less adverse impacts.

All work will take place on the bridge. No in-water work or work within the creek channel is anticipated for the proposed project. The creek channel will not be disturbed; therefore, no need for CWA permits.

Executive Order 11990 – Protection of Wetlands

This order established a national policy to avoid adverse impacts to wetlands whenever there is a practicable alternative. The U. S. Department of Transportation (DOT) promulgated DOT Order 5660.1A in 1978 to comply with this direction. On federally funded projects, impacts to wetlands must be identified. Alternatives that avoid wetlands must be considered. If wetland impacts cannot be avoided, then all practicable measures to minimize harm must be included. This must be documented in a specific Wetlands Only Practicable Alternative Finding. An additional requirement is to provide early public involvement in projects affecting wetlands. FHWA provides technical assistance (Technical Advisory 6640.8A) and reviews environmental documents for compliance. No wetlands would be impacted by this project.

California Porter-Cologne Water Quality Control Act

This regulatory law is becoming more prominent on projects involving impacts to isolated Waters of the State (non-404/401 waters). The RWQCB is increasingly requiring Waste Discharge Requirement (WDR) permits for impacts to Waters of the State. No Waters of the State would be impacted by this project.

Streams, Lakes, and Riparian Habitat in California

Streams and lakes, as habitat for fish and wildlife species, are subject to the jurisdiction of California Department of Fish and Wildlife (CDFW) under Sections 1600-1616 of California Fish and Game Code. Alterations to, or work within or adjacent to streambeds or lakes, generally require a 1600 series Lake and Streambed Alteration Agreement. The term “stream”, which includes creeks and rivers, is defined in the California Code of Regulations (CCR) as “a body of water that flows at least periodically or intermittently through a bed or channel having banks and supports fish or other aquatic life [including] watercourses having a surface or subsurface flow that supports or has supported riparian vegetation” (14 CCR 1.72). In addition, the term “stream” can include ephemeral streams, dry washes, watercourses with subsurface flows, canals, aqueducts, irrigation ditches, and other means of water conveyance if they support aquatic life, riparian vegetation, or stream-dependent terrestrial wildlife (CDFG 1994). “Riparian” is defined as “on, or pertaining to, the banks of a stream.” Riparian vegetation is defined as “vegetation which occurs in and/or adjacent to a stream and is dependent on, and

occurs because of, the stream itself" (CDFG 1994). Removal of riparian vegetation also requires a Lake and Streambed Alteration Agreement from CDFW.

INVASIVE SPECIES

Executive Order 13112 – Invasive Species

On February 3, 1999, President William J. Clinton signed Executive Order (EO) 13112 requiring federal agencies to combat the introduction or spread of invasive species in the United States. The order defines invasive species as "any species, including its seeds, eggs, spores, or other biological material capable of propagating that species, that is not native to that ecosystem whose introduction does or is likely to cause economic or environmental harm or harm to human health." Federal Highway Administration (FHWA) guidance issued August 10, 1999 directs the use of the State's invasive species list, maintained by the California Invasive Species Council (2016) to define the invasive plants that must be considered as part of the NEPA analysis for a proposed project. Under EO 13112, federal agencies cannot authorize, fund, or carry out actions that it believes are likely to cause or promote the introduction or spread of invasive species in the United States or elsewhere unless all reasonable measures to minimize risk of harm have been analyzed and considered.

PROTECTED SPECIES

Special-Status Species

Special-status species include those plants and wildlife species that have been formally listed, are proposed as endangered or threatened, or are candidates for such listing under the federal Endangered Species Act or California Endangered Species Act. These acts afford protection to both listed and proposed species. In addition, California Department of Fish and Wildlife Species of Special Concern, which are species that face extirpation in California if current population and habitat trends continue, U.S. Fish and Wildlife Service (USFWS) Birds of Conservation Concern, and CDFW special-status invertebrates are all considered special-status species. Although CDFW Species of Special Concern generally have no special legal status, they are given special consideration under the California Environmental Quality Act (CEQA). Plant species on the California Native Plant Society (CNPS) Rare and Endangered Plant Inventory with California Rare Plant Rank of 1 or 2 are also considered special-status plant species and must be considered under CEQA. Rank 3 and Rank 4 species are afforded little or no protection under CEQA.

Federal Endangered Species Act

The Endangered Species Act (ESA) of 1973, as amended (16 USC 1531 et seq.), was enacted to provide a means to identify and protect endangered and threatened species. Under Section 9 of the ESA, it is unlawful to take any listed species. "Take" is defined as harassing, harming, pursuing, hunting, shooting, wounding, killing, trapping, capturing, or collecting a listed species. "Harass" is defined as an intentional or negligent act or omission, which creates the likelihood of injury to wildlife by annoying it to such an extent as to significantly disrupt normal behavioral patterns, which include, but are not limited to, breeding, feeding, or sheltering. "Harm" is defined as an act which actually kills or injures fish or wildlife and may include significant habitat modification or degradation which actually kills or injures fish or wildlife by significantly impairing essential behavioral patterns, including breeding, spawning, rearing, migrating, feeding, or sheltering. Actions

that may result in “take” of a federal-listed species are subject to USFWS or National Marine Fisheries Service (NMFS) permit issuance and monitoring. Section 7 of ESA requires federal agencies to ensure that any action authorized, funded, or carried out by the agency is not likely to jeopardize the continued existence of any endangered or threatened species or result in the destruction or adverse modification of designated critical habitat for such species. Any action authorized, funded, or carried out by a federal agency or designated proxy (e.g., Caltrans) which has potential to affect listed species requires consultation with the USFWS or the NMFS under Section 7 of the ESA.

Essential Fish Habitat

The Magnuson-Stevens Fishery Conservation and Management Act of 1976 was established to conserve and manage fishery resources found off the coast, as well as anadromous species and Continental Shelf fishery resources of the United States, by exercising (A) sovereign rights for the purposes of exploring, exploiting, conserving, and managing all fish within the exclusive economic zone established by Presidential Proclamation 5030, dated March 10, 1983, and (B) exclusive fishery management authority beyond the exclusive economic zone over such anadromous species, Continental Shelf fishery resources, and fishery resources in special areas.

California Endangered Species Act

CDFW is responsible for administering California Endangered Species Act (CESA, CDFG Code §§2050, et seq.), which prohibits take of species that have been listed, or are considered for listing (candidate species) as threatened or endangered species within the State of California. CESA allows for incidental take of state listed species through issuance of an Incidental Take Permit, or through a Consistency Determination in coordination with a Biological Opinion issued by the USFWS (CDFW Code Section 2081). In contrast with federal law, the definition of “take” under CESA involves actual harm to one or more members of a listed species and does not extend to modification of habitat not involving direct take.

Migratory Bird Treaty Act

This treaty with Canada, Mexico and Japan makes it unlawful at any time, by any means or in any manner, to pursue, hunt, take, capture, or kill migratory birds. The law applies to the removal of nests (such as swallow nests on bridges) occupied by migratory birds during the breeding season. California Fish and Game Code (Sec 3500) also prohibits the destruction of any nest, egg, or nestling.

Other Sensitive Biological Communities

Other sensitive biological communities not discussed above include habitats that fulfill special functions or have special values. Natural communities considered sensitive are those identified in local or regional plans, policies, regulations, or by the CDFW. CDFW ranks sensitive communities as "threatened" or "very threatened" and keeps records of their occurrences in its California Natural Diversity Database (CNDDB; CDFW 2017a). Sensitive plant communities are also identified by CDFW. CNDDB vegetation alliances are ranked 1 through 5 based on NatureServe's (2010) methodology, with those alliances ranked globally (G) or statewide (S) as 1 through 3 considered sensitive. Impacts to sensitive natural communities identified in local or regional plans, policies, or regulations or those identified by the CDFW or USFWS must be considered and evaluated under CEQA (CCR Title 14, Div. 6, Chap. 3, Appendix G). Specific habitats may also be identified as sensitive in city or county general plans or ordinances.

LOCAL POLICIES AND ORDINANCES

Tree Protection Ordinance

In 1973, the Town of Fairfax approved Ordinance No. 387 for trees. The purpose of the ordinance is to preserve the wide variety of local native trees and to protect the benefits they provide the citizens. Chapter 8.36.020 of the Town Code defines "altering" and "tree." A Tree Permit is required for removal or significant trimming of any tree, which has a circumference of 24 inches or more measured at 24 inches above the ground. In effect, this is a little less than an 8-inch diameter tree trunk.

Studies Required

The Town's consultants, Kelly Biological Consulting and WRA conducted field studies in the entire BSA to determine the presence of wetlands and "other waters", and to evaluate the presence or potential presence of special-status species and sensitive habitats. Methods used during the site visits to make determinations for this NES are described below.

Special-Status Species

Prior to the field site visits to the BSA, the following sources were reviewed to determine which special-status plant and wildlife species have been documented to occur in the vicinity of the BSA:

- California Natural Diversity Database (CNDDB) records for the Bolinas, Novato, Petaluma Point, Point Bonita, San Francisco North, San Geronimo, San Rafael, San Quentin U.S. Geological Service 7.5' Quadrangles (CDFW 2017a)
- USFWS official species list for the proposed Project through the Information for Planning and Conservation (IPaC) report (USFWS 2017)
- CNPS Inventory of Rare, Threatened, and Endangered Plants of California records for the Bolinas, Novato, Petaluma Point, Point Bonita, San Francisco North, San Geronimo, San Rafael, San Quentin U.S. Geological Service 7.5' Quadrangles (CNPS 2017)
- CDFW Spotted Owl Database (CDFW 2017b)
- CDFW California Wildlife Habitat Relationships Online Database (CDFW 2017c)
- CDFW Passage Assessment Database (CDFW 2017d)
- CDFG publication "California's Wildlife, Volumes I-III" (Zeiner et al. 1990)
- CDFW publication "Amphibians and Reptile Species of Special Concern in California" (Thomson et al. 2016)
- A Field Guide to Western Reptiles and Amphibians (Stebbins 2003)
- CDFG publication "California Bird Species of Special Concern" (Shuford and Gardali 2008)
- University of California at Davis, Center for Watershed Sciences. Pisces: California Fish Data and Management Software (UC Davis 2017)
- NMFS Species List and Essential Fish Habitat Maps of California (NMFS 2017)
- The Marin County Breeding Bird Atlas (Shuford 1993)

- eBird online database (eBird 2017)
- Western Bat Working Group (WBWG) online species accounts (WBWG 2017)

Special-Status Species. Between March-May 2015 and March-June 2016, the Town's consultant Kelly Biological Consulting (Micki Kelly) completed floristic surveys for special-status plant species that have flowering periods, which overlap with the timing of the visits. All plant species observed and identifiable were recorded. As discussed below, WRA biologists conducted site visits in November 2014 and March 2016 to determine the potential for the BSA to support special-status fisheries and wildlife species, though the studies did not constitute protocol level surveys. Habitat conditions observed in the BSA during the site visits were used to evaluate the potential for presence of special-status species based on these literature searches and the professional expertise of the investigating biologists. Table 1 presents the results of the evaluation of habitat potential for each special-status plant and wildlife species documented to occur in the vicinity of the BSA based on the literature database search. A list of all plant and wildlife species observed during the site visits is provided in Appendix A. The USFWS official listing of special-status species with a potential to occur in the proposed project vicinity is provided in Appendix B.

Section 404 "Waters of the U.S." During the site visit, the BSA was evaluated for the presence of indicators of wetlands and "other waters". Section 328.3 of the Federal Code of Regulations defines wetlands as:

> *"Those areas that are inundated or saturated by surface or ground water at a frequency and duration sufficient to support, and that under normal circumstances do support, a prevalence of vegetation typically adapted for life in saturated soil conditions. Wetlands generally include swamps, marshes, bogs, and similar areas.*" EPA, 40 CFR 230.3 and CE, 33 CFR 328.3 (b)

The methods used to delineate potential jurisdictional wetlands and waters are based on the *U.S. Army Corps of Engineers Wetlands Delineation Manual* ("Corps Manual"; Environmental Laboratory 1987) and the *Regional Supplement to the Corps of Engineers Wetland Delineation Manual: Arid West Region (Version 2.0)* ("Arid West Supplement"; USACE 2008). The routine method for wetland delineation described in the Corps Manual was used to identify areas potentially subject to USACE Section 404 jurisdiction within the BSA.

The BSA was evaluated for the presence or absence of indicators of the three wetland parameters described in the Corps Manual and Arid West Supplement. The three parameters are the presence of: (1) hydrophytic vegetation, (2) wetland hydrology, and (3) hydric soils. According to the Corps Manual, for areas not considered "problem areas" or "atypical situations":

> *"... [E]vidence of a minimum of one positive wetland indicator from each parameter (hydrology, soil, and vegetation) must be found in order to make a positive wetland determination."*

This study also evaluated the presence of unvegetated "other waters" potentially subject to USACE jurisdiction under Section 404 of the Clean Water Act. Besides wetlands, other areas subject to Corps jurisdiction include lakes, rivers and streams in addition to all areas below the high tide line (HTL) in areas subject to tidal influence. No tidally influenced areas are present in the BSA. Jurisdiction in non-tidal areas extends to the ordinary high water (OHW) mark defined as:

> "*...that line on the shore established by the fluctuations of water and indicated by physical characteristics such as clear, natural line impresses on the bank, shelving, changes in the characteristics of the soil, destruction of terrestrial vegetation, the presence of litter and debris, or other appropriate means that consider the characteristics of the surrounding areas.*" Federal Register Vol. 51, No. 219, Part 328.3 (e). November 13, 1986.

Identification of the ordinary high water mark at this site followed the USACE Regulatory Guidance Letter No. 05-05, *Ordinary High Water Mark Identification* (USACE 2005), which provides a list of indicators, such as shelving, natural lines impressed on the bank, wrack lines, scour, and sediment deposition. These indicators were used to map the location of the ordinary high water mark for "other waters" in the BSA.

Vegetation Communities and Sensitive Habitats. Vegetation communities present in the BSA were classified based on plant community descriptions found in *A Manual of California Vegetation, 2nd Edition* (Sawyer, J., T. Keeler-Wolf and J. Evens 2009). However, in some cases it was necessary to identify variants of community types or to describe non-vegetated areas that are not identified in the literature.

Biological communities were classified as sensitive or non-sensitive as defined by CEQA. Sensitive plant communities include habitats that fulfill special functions or have special values. Natural communities considered sensitive are those identified in local or regional plans, policies, regulations, or by CDFW. CDFW ranks sensitive communities as 'threatened' or 'very threatened' and keeps records of their occurrences in its CNDDB. Also, vegetation alliances are ranked 1 through 5 (Sawyer, J., T. Keeler-Wolf and J. Evens 2009). Alliances ranked globally (G) or statewide (S) as 1 through 3 are considered sensitive. Impacts to sensitive natural communities identified in local or regional plans, policies, regulations, or by CDFW or USFWS must be considered and evaluated under CEQA.

Personnel and Survey Dates

The Town's consultant, Micki Kelly (Certified Professional Wetland Scientist and plant ecologist with 25 years of experience) conducted the wetland delineation on April 12, 2016 and special-status plant surveys on January 16 and March 16, 2015, as well as April 12 and June 23, 2016. Dan Chase and Rob Schell (WRA fisheries and wildlife biologists) conducted the biological resource site visits on November 17, 2014. Nick Brinton also visited the site on March 16, 2016. Their qualifications are provided in Appendix C.

Agency Coordination and Professional Contacts

In a May 18, 2016 informal Marin Project Coordination interagency meeting, Ms. Kelly briefly introduced the concept of the Fairfax BPMP bridge project prior to finalize design plans. The CDFW and RWQCB indicated that depending on the level of impact, compensatory mitigation may be necessary. No other agency coordination has been done.

Limitations That May Influence Results

The region was in a multi-year drought, making conditions drier than normal during the spring of 2015 work. The wet season 2015-6 rainfall totals were slightly above normal

(http://www.marinwater.org/300/Water-Watch). The site visits were conducted during daylight hours and consisted of an assessment of likely habitats for special-status plants and wildlife; it did not conform to specific USFWS or NMFS protocols for any species. No detailed fish studies were completed to identify and enumerate fish species present. Data and documents from previous studies in the area were relied upon to evaluate potential presence of fish species.

Chapter 3 – Results: Environmental Setting

This section describes the region in which the proposed project will occur. It is intended to explain context and the level of intensity of impacts. It includes a brief description of the area's topography, soils, habitat, watercourses, and level of human or natural disturbance.

Existing Biological and Physical Conditions

BIOLOGICAL STUDY AREA

The BSA is located on and around the Spruce Road Bridge over Fairfax Creek in the Town of Fairfax, Marin County, California. Spruce Road is a local residential road. The BSA covers the areas where the proposed project-related direct or indirect actions such as ground-disturbing, construction, staging, or access activities would occur and goes beyond that to ensure that key biological issues are addressed. Spruce Road is a local road in a suburban developed area. The adjacent land use is residential (single family homes). The BSA extends up and downstream from the bridge along the stream corridor covering the primary natural area.

Site elevations range from approximately 100 to 200 feet NAVD88. Surrounding land use is primarily residential. The bridge is located on the San Rafael USGS 7.5-minute quadrangle map at latitude W37.987790, longitude N122.593195.

PHYSICAL CONDITIONS

Topography

Within the BSA the creek has been channelized. The steep banks are roughly 10 to 20 vertical feet (top of bank to channel) near the bridge. Adjacent to the top of bank, lands are relatively flat. To the west of the BSA are hills.

Hydrology

Fairfax Creek is a blueline stream that is perennial at this location. The principal natural hydrological sources for the BSA are creek flow, direct precipitation, and surface run-off from adjacent lands. Fairfax Creek flows though the BSA towards the southeast. In roughly 0.3 miles, it joins San Anselmo Creek, which turns east, eventually flowing into Corte Madera Creek, then San Francisco Bay, and the Pacific Ocean.

Soils

The soils that occur in the BSA are Xerorthents-Urban land complex (0 to 9 percent slopes) on the eastern half of the site and Tocaloma-McMullin-Urban land complex (30 to 50 percent slopes) on the western half of the site (USDA NRCS 2017). The Tocaloma-McMullin-Urban land complex is a fine-loamy, mixed, mesic Typic Haploxeroll. Its drainage class is well drained. Soil taxonomy information is not available on the Xerorthents-Urban land complex.

The lower part of the northwest bank is a vertical concrete wall with a concrete footing, above that, is a steep natural substrate slope. The other banks are generally natural substrate.

BIOLOGICAL CONDITIONS IN THE BSA

Ruderal Disturbed/Developed

The Ruderal Disturbed/Developed portion of the BSA includes pavement (Spruce Road and driveways), gravel and dirt roadsides, structures (homes and outbuildings), backyards, and landscaping or bare areas. In the areas that are not landscaped, the vegetation is predominately non-native species commonly found in the region, such as privet (*Ligustrum japonicum*), English ivy (*Hedera helix*), goosegrass (*Galium aparine*), cut leaf geranium (*Geranium dissectum*), and non-native grasses.

Riparian Woodland

An open canopy woodland loosely similar to California Bay Forest Alliance (*Umbellaria californica* Alliance) (Sawyer, Keeler-Wolf, and Evans 2009) follows a narrow path through the BSA (Figure 3a). This habitat is somewhat common in the northern California Coast region in moist areas. Within the BSA, the overstory species include native species such as California bay, white alder (*Alnus rhombifolia*) and sycamore (*Platanus racemosa*), as well as non-natives such as black acacia (*Acacia melanoxylon*), cherry plum (*Prunus cerasifera*) and firethorn (*Pyracantha* sp.). The herbaceous/vine layer is comprised mainly of English ivy and Himalayan blackberry (*Rubus armeniacus*), with some California man-root (*Marah fabacea*) and scattered grasses and forbs including panic veldtgrass (*Ehrharta erecta*) and miners lettuce (*Claytonia perfoliata*).

Perennial Stream (“Other Waters”)

Fairfax Creek is a perennial creek. Flows vary with the rainfall patterns of a given season. It is supported by a local watershed, generally, the northwestern part of the Town of Fairfax and adjacent open space lands. The creek substrate is a mix of small gravel to larger cobble and rock. Indicators of the OHW mark include the slope change at the bed and earthen bank junction and wrack at the edge of the creek bed. The channel width at the OHW mark was used to determine the stream (“other waters”) boundary shown on Figure 3a. The creek is not included on the National System of Wild and Scenic Rivers published by the U.S. Department of the Interior. There are no wetlands in the BSA. The banks under the bridge are concrete. Just upstream of the bridge on the northwest side is a concrete retaining wall along the base of the bank. The other banks are earthen.

Wildlife Species in the BSA

Wildlife species common to the vicinity of the BSA include California scrub jay (*Aphelocoma californica*), acorn woodpecker (*Melanerpes formicivorus*) green heron (*Butorides virescens*), and American crow (*Corvus brachyrhynchos*). The BSA is located upstream of a total fish passage barrier at Bolinas Avenue upstream of the confluence with San Anselmo Creek. Fairfax Creek is not considered anadromous, but does support non-anadromous native fish species.

wra
ENVIRONMENTAL CONSULTANTS

Bridge Preventative Maintenance Program

Spruce Road Bridge NES

Marin County, California

Figure 3a.

Biological Communities within the Biological Study Area

Biological Study Area - 1.49 acres
Perennial stream - 0.07 acre
Riparian woodland - 0.07 acre
Ruderal disturbed/Developed - 1.35 acres

N
W E
S

0 10 20 40
Feet

Map Date: April 26, 2017
Map By: smortensen
Base Source: Esri Streaming - World Imagery

Path: L:\Acad 2000 Files\22000\22304\GIS\ArcMap\BPMP\Spruce Road Bridge\2017\Fig3a_Spruce_BioComms_20170426.mxd

This page intentionally left blank

INVASIVE SPECIES

Federal Highway Administration guidance issued August 10, 1999, states that the State's invasive species list, maintained by the California Invasive Species Council be used to define the invasive plants. The California Invasive Plant Council (Cal-IPC) Inventory and CDFA maintain lists of invasive plant species. Cal-IPC list categorizes plants as High, Moderate, or Limited, reflecting the level of each species' negative ecological impact in California. Cal-IPC defines High as "species that have severe ecological impacts on physical processes, plant and animal communities, and vegetation structure. Their reproductive biology and other attributes are conducive to moderate to high rates of dispersal and establishment. Most are widely distributed ecologically." (Cal-IPC 2017). The species found in the BSA that are listed on the Cal-IPC list as High are English ivy, French broom (*Genista monspessulana*), Himalayan blackberry, and fennel (*Foeniculum vulgar*). Several species with moderate rating were also observed, big-leaf periwinkle (*Vinca major*), wild oats (*Avena fatua*), and panic veldtgrass.

No work is expected in the natural areas. During construction any French broom individuals within the BSA and adjacent to the work area will be removed. English ivy, Himalayan blackberry, and big-leaf periwinkle, wild oats, panic grass will be more difficult to eradicate given that they are common upstream, and downstream of the BSA. The proposed project will remove individuals of those species in or adjacent to the work area.

New Zealand mud snail (NZMS; *Potamopyrgus antipodarum*) are documented within San Anselmo Creek, less than one mile downstream of the BSA. Therefore, there is a high potential for NZMS to be present within the BSA. Construction equipment such as pumps, tanks, or heavy equipment which operates within an infested aquatic environment is at risk for spreading NZMS. Snails can survive in pooled water of pumps and tanks or in mud which remains attached to equipment. No work is to occur within creek channel or come into contact with potentially contaminated material. All equipment which is restricted to the road surface and deck does not need to conduct decontamination procedures. However, to ensure any equipment that is to be operated below deck, decontamination procedures will be conducted to prevent the spread of NZMS. All construction equipment operated below the road surface will be thoroughly cleaned to remove all attached soil and all water within the compartments will be dried up. Pumps and tanks will be cleaned and must remain fully dried for 72 hours following cleaning before equipment may be used on another aquatic project. In addition, any measures required by the agencies will be implemented.

Regional Species and Habitats and Natural Communities of Concern

The species listed in the CDFW (2017), CNPS (2017), and USFWS (2017) records search results are discussed in Table 1. The printout of the USFWS list can be found in Appendix B. Figures 4 and 5 show the documented occurrences for special-status plant and wildlife species (respectively) in the vicinity of the BSA based on the CNDDB (CDFW 2017a) A description of habitat requirements is provided for each special-status plant or wildlife species along with an evaluation of its potential to occur within the BSA. Potential for special-status species to occur in the BSA was determined according to the following criteria:

- Absent [A] - No habitat present and no further work needed.
- Habitat Present [HP] - Habitat is, or may be present. The species may be present.
- Present [P] - Species is present

- Critical Habitat [CH] - Proposed project footprint is located within a designated critical habitat unit, but does not necessarily mean that appropriate habitat is present.

Based on these results, it was determined that 77 special-status plant species and 92 special-status wildlife species have been documented from or have a range that occurs in the San Rafael, Bolinas, San Geronimo, Novato, Petaluma Point, San Quentin, San Francisco North, or Point Bonita 7.5-minute USGS quadrangles. Of these species, 20 special-status plant species and three special-status wildlife species have documented occurrences within 5 kilometers (3 miles) of the BSA (CDFW 2017a).

Due to a lack of appropriate habitat elements (such as coastal salt marsh) and the presence of residential development in the surrounding landscape, it was determined that the BSA has the potential to support only two of the special-status plant species identified in Table 1. Site visits occurred during appropriate periods for plant species identification; however, no special-status plants were observed in the BSA during the site assessments conducted for this report.

Fairfax Creek within the BSA is listed as essential fish habitat (EFH) for Coho salmon (*Oncorhynchus kisutch*) and Chinook salmon (*O. tshawytscha*); however, neither species is considered present because the BSA is outside of both species current or known ranges (NMFS 2012, UC Davis 2017). A total barrier to anadromy in Fairfax Creek is located just upstream of the confluence with San Anselmo Creek and prevents steelhead from entering Fairfax Creek. Steelhead are not considered present within Fairfax Creek or the BSA because of this barrier (Ross Taylor and Associates 2006). Based on habitat and conditions within the BSA and documented occurrences nearby, it was determined that the BSA has potential to support three special-status wildlife species identified in Table 1.

The proposed project primarily involves short-term, temporary impacts and will not disrupt connectivity in the region. All work will take place on the bridge. No in-water work or work within the creek channel is anticipated for the proposed project. The creek channel will not be disturbed. Sensitive habitat within the BSA is limited to Fairfax Creek which is a perennial waterway in this reach. Fairfax Creek is subject to USACE, RWQCB, and the CDFW jurisdiction.

Table 1: Listed, Proposed Species, and Critical Habitat Potentially Occurring or Known to Occur in the BSA.

Common Name	Scientific Name	Status	General Habitat Description	Habitat Present/ Absent	Rationale
Birds					
tricolored blackbird	*Agelaius tricolor*	SC, BCC, SSC	(Nesting colony) highly colonial species, most numerous in Central Valley and vicinity. Largely endemic to California. Requires open water, protected nesting substrate, and foraging area with insect prey within a few kilometers of the colony.	A	The BSA does not contain any open waters such as ponds, lakes or marsh habitat that supports foraging or nesting by the colony. This species has not been found within 10 miles of the BSA (CDFW 2017a).
grasshopper sparrow	*Ammodramus savannarum*	SSC	Summer resident. Nests in open grassland habitats, generally with low- to moderate-height grasses and scattered shrubs. Nest typically placed on the ground and well-hidden. Secretive.	A	The BSA does not contain annual grassland that could support nesting or foraging by the species. Additionally, the BSA is located within riparian woodland habitat which is not suitable for this species.
Bell's Sage Sparrow	*Amphispiza belli belli*	BCC	(Nesting) Nests in chaparral dominated by dense stands of chamise. Found in coastal sage scrub in southern portions of range. Nests are typically located on the ground beneath a shrub or in a shrub 6 to 18 inches above ground. Territories about 50 yards apart.	A	The BSA is comprised of developed surfaces, riparian woodland, and a stream channel, it does not contain any chaparral or coastal sage scrub habitat. Additionally chamise, the preferred nesting habitat for this species is absent from the BSA.
golden eagle	*Aquila chrysaetos*	CFP, BCC	Resident in rolling foothills, mountain areas, sage-juniper flats, and desert. Cliff-walled canyons provide nesting habitat in most parts of range; also nests in large trees in open areas.	A	Areas within the BSA and immediately surrounding are low-density residential developments and comprised of riparian woodland which do not provide suitable nesting habitat for the species. The BSA also does not support habitat for the preferred prey species of golden eagle.

Common Name	Scientific Name	Status	General Habitat Description	Habitat Present/ Absent	Rationale
great egret	*Ardea alba*	None	(Rookery) Colonial nester in large trees. Rookery sites located near marshes, tide-flats, irrigated pastures, and margins of rivers and lakes.	A	Suitable rookery trees are absent from the BSA and immediate surrounds, however, this species may occasionally fly over the BSA.
great blue heron	*Ardea herodias*	None	(Rookery) Colonial nester in tall trees, cliffs, and sequestered spots on marshes. Rookery sites in close proximity to foraging areas: marshes, lake margins, tide-flats, rivers and streams, wet meadows.	A	Suitable rookery trees are absent from the BSA and immediate surrounds, however, this species may occasionally fly over the BSA.
short-eared owl	*Asio flammeus*	SSC	(Nesting) Found in swamp lands, both fresh and salt; lowland meadows; irrigated alfalfa fields. Tule patches/tall grass needed for nesting/daytime seclusion. Nests on dry ground in depression concealed in vegetation.	A	The BSA and immediate vicinity are residential development and riparian woodland which do not provide nesting habitat for the species. Lowland marshes, tule patches or tall grasslands that typically support nesting by the species do not occur in the BSA.
long-eared owl	*Asio otus*	SSC	Primarily a year-round resident. Inhabits riparian bottomlands to tall willows and cottonwoods; also, belts of live oak paralleling stream courses. Requires dense foliage cover within occupied tree stands, adjacent open land productive of mice for foraging, and the presence of old nests of other birds for nesting.	A	This species is a very rare breeder in Marin County. The only recorded occurrences of the species are near Bolinas and Drake's Bay, both locations are greater than 5 miles from the BSA (Shuford 1993 The BSA and vicinity is residential development with constant levels of anthropogenic disturbance which make the area unsuitable for nesting by the species.

Common Name	Scientific Name	Status	General Habitat Description	Habitat Present/ Absent	Rationale
burrowing owl	*Athene cunicularia*	SSC, BCC	Open, dry annual or perennial grasslands, deserts, and scrublands characterized by low-growing vegetation. Subterranean nester, dependent upon burrowing mammals, most notably, the California ground squirrel.	A	The BSA and immediate vicinity are residential development and riparian woodland which do not provide habitat for the species. The BSA does not contain short grasslands or open areas containing burrows that could provide nesting or wintering habitat for this species.
oak titmouse	*Baeolophus inornatus*	BCC	Oak woodland and savannah, open broad-leaved evergreen forests containing oaks, and riparian woodlands. Associated with oak and pine-oak woodland and arborescent chaparral.	HP	Riparian woodland within and surrounding the BSA provides potential nest-trees and foraging habitat to support this species.
marbled murrelet	*Brachyramphus marmoratus*	FT, SE	(Nesting) Feeds near shore; nests inland along the Pacific coast, from Eureka to Oregon border, and from Half Moon Bay to Santa Cruz. Nests in old-growth redwood-dominated forests, up to six miles inland. Nests often built in Douglas-fir or redwood stands containing platform-like branches.	A	This species is not known to nest within Marin County (Shuford 1993, McShane et al. 2004, USFWS 2009). In addition, no old growth redwood forest is present in the vicinity of the BSA to provide the isolation and platform like structure required for nesting by the species.
Lawrence's goldfinch	*Carduelis lawrencei*	BCC	Resident to nomadic; inhabits oak woodlands, chaparral, riparian woodlands and other areas, often near water. Not known to breed in the vicinity of San Francisco Bay.	A	The BSA and immediate vicinity are residential development and riparian woodland which do not provide suitable nesting habitat for the species. This species is a very rare breeder in Marin County and typically inhabits the dry southern portions of the county.

Common Name	Scientific Name	Status	General Habitat Description	Habitat Present/ Absent	Rationale
Vaux's swift	*Chaetura vauxi*	SSC	Summer resident, primarily in forested areas. Nests in tree cavities, favoring those with a large vertical extent. Also uses chimneys and other manmade substrates. Forages widely for aerial insects, often over or near rivers and lakes.	A	Trees surrounding the BSA are not adequate in size to provide suitable cavities that are required to support nesting by the species.
western snowy plover	*Charadrius alexandrinus nivosus*	FT, SSC, BCC	(Nesting) Federal listing applies only to the Pacific coastal population. Found on sandy beaches, salt pond levees and shores of large alkali lakes. Requires sandy, gravelly or friable soils for nesting.	A	The BSA and immediate vicinity are residential development and riparian woodland which do not provide nesting habitat for the species. Sandy beaches, salt flats or alkali lake flats that this species inhabits are absent from the BSA and surrounding area.
northern harrier	*Circus cyaneus*	SSC	(Nesting) Nests and forages in grassland habitats, usually in association with coastal salt and freshwater marshes. Nests on ground in shrubby vegetation, usually at marsh edge; nest built of a large mound of sticks in wet areas.	A	The BSA and immediate vicinity are residential development and riparian woodland which do not provide nesting habitat for the species. Suitable mesic grasslands or marsh habitat are absent from the BSA and the immediate surrounding areas.
Lewis's woodpecker	*Melanerpes lewis*	BCC	Uncommon resident in California occurring on open oak savannahs, broken deciduous and coniferous habitats. Primarily in ponderosa pine forests, riparian woodlands and disturbed pine forests but is known to nest in orchards and oak woodlands. Rare nester in the San Francisco Bay Area.	A	This species is a rare nester in the Bay Area, and is unlikely to be found within the BSA. The narrow riparian woodland within residential development is not sufficient to support this species. Lewis's woodpecker has not been observed in the vicinity of the BSA (Shuford 1993, eBird 2017).

Common Name	Scientific Name	Status	General Habitat Description	Habitat Present/ Absent	Rationale
yellow warbler	*Setophaga (Dendroica) petechia brewsteri*	SSC, BCC	Summer resident throughout much of California. Breeds in riparian vegetation close to water, including streams and wet meadows. Microhabitat used for nesting variable, but dense willow growth is typical. Occurs widely on migration.	A	The riparian woodland within the BSA does not contain dense understory typical for nesting by this species. This species may be observed foraging in the BSA.
western yellow-billed cuckoo	*Coccyzus americanus occidentalis*	FT, SE, BCC	Summer resident, breeding in dense riparian forests and jungles, typically with early successional vegetation present. Utilizes densely-foliaged deciduous trees and shrubs. Eats mostly caterpillars. Current breeding distribution within California very restricted.	A	Marin County is not within the documented breeding range of this species. Additionally, the extensive riparian woodland habitat that this species inhabits is absent from the BSA.
olive-sided flycatcher	*Contopus cooperi*	SSC, BCC	Summer resident. Breeds in montane coniferous forests, as well as mixed forests along the coast. Often associated with edge habitats.	A	The BSA contains riparian woodland dominated by California bay trees which are not typically used for nesting. However, the woodland may support nesting and foraging within the BSA.
black swift	*Cypseloides niger*	SSC, BCC	Summer resident with a fragmented breeding distribution; most occupied areas in California either montane or coastal. Breeds in small colonies on cliffs behind or adjacent to waterfalls, in deep canyons, and sea-bluffs above surf. Forages aerially over wide areas.	A	Marin County is not within the documented breeding range of this species. Additionally, the BSA does not contain cliffs or deep canyons capable of providing nesting habitat for this species.

Common Name	Scientific Name	Status	General Habitat Description	Habitat Present/ Absent	Rationale
snowy egret	*Egretta thula*	none	(Rookery) colonial nester, with nest sites situated in protected beds of dense tules. Rookery sites situated close to foraging areas: marshes, tidal-flats, streams, wet meadows, and borders of lakes.	A	Suitable rookery trees are absent from the BSA and immediate surrounds, however, this species may occasionally fly over the BSA.
white-tailed kite	*Elanus leucurus*	CFP	(Nesting) Year-long resident of open grasslands and agricultural areas. Preys on small diurnal mammals and occasional birds, insects, reptiles, and amphibians. Nests in tree-tops.	A	The BSA and immediate vicinity are residential development and riparian woodland which do not provide suitable nesting habitat for the species. The BSA does not contain open areas such as agricultural fields, grasslands or marsh that are typically used by this species. This species could occasionally be observed flying over the BSA.
American peregrine falcon	*Falco peregrinus anatum*	FD, SD,CFP, BCC	Year-round resident and winter visitor in the region. Habitat variable, though usually associated with coasts, bays, marshes and other bodies of water. Nests on sheer, protected cliffs and also on manmade structures including buildings and bridges. Preys on birds, especially waterbirds.	A	High cliffs, and tall buildings typically used for nesting by this species are absent from the BSA and vicinity. Large water-bodies which provide foraging habitat are absent from the BSA and immediate surrounding area.
common loon	*Gavia immer*	SSC	Winter visitor; does not nest in the vicinity San Francisco Bay. Aquatic, generally found in large, deep water bodies with abundant fish.	A	Common loons do not nest in California. Furthermore, the BSA does not contain any open water habitat capable of supporting foraging by this species.

Common Name	Scientific Name	Status	General Habitat Description	Habitat Present/ Absent	Rationale
saltmarsh common yellowthroat	*Geothlypis trichas sinuosa*	SSC, BCC	Resident of the San Francisco Bay region, in fresh and salt water marshes. Requires thick, continuous cover down to water surface for foraging; tall grasses, tule patches, willows for nesting.	A	The BSA is not within the known breeding distribution of this subspecies. Suitable salt marsh habitat which is required for nesting and foraging is absent from the BSA and vicinity.
black oystercatcher	*Haematopus bachmani*	BCC	Resident on rocky shores of marine habitats along almost the entire California coast and adjacent islands. Breeds on undisturbed, rocky, open shores and cliffs.	A	The BSA is not within the known breeding distribution of this species. Rocky shoreline and marine habitats which support nesting and foraging by the species are absent from the BSA and immediate surrounds.
bald eagle	*Haliaeetus leucocephalus*	FD, SE, CFP, BCC	Primarily a winter visitor in the region; small numbers are present year-round and breed. Favors areas near larger bodies of water with abundant fish: lakes and reservoirs, rivers, and the ocean. Nests in large, old-growth, or dominant live tree with open branchwork. Often roosts communally in winter.	A	The BSA and immediate vicinity are residential development and riparian woodland which do not provide nesting habitat for the species. The forested portions of the BSA do not contain the tall open branch-work needed to support nesting. Additionally, suitable foraging habitat does not occur within 2 miles of the BSA.
Caspian tern	*Hydroprogne caspia*	BCC	Nests in small colonies inland and along the coast on sandy estuarine shores, levees, and salt ponds. Found in inland fresh-water lakes and marshes; also, brackish or salt waters of estuaries and bays.	A	The BSA is not within the known breeding distribution of this species. Islands, shores, levees or salt ponds that support nesting by this species are absent. The BSA does not occur near marine environments to support foraging.

Common Name	Scientific Name	Status	General Habitat Description	Habitat Present/ Absent	Rationale
yellow-breasted chat	*Icteria virens*	SSC	Summer resident, utilizing riparian areas with an open canopy, very dense understory, and trees for song perches. Nests in thickets of willow, blackberry, and wild grape.	A	The BSA and immediate vicinity are residential development and riparian woodland which do not provide nesting habitat for the species. The BSA lacks a dense riparian understory that this species requires. Furthermore, it is not known to nest within 10 miles of the BSA.
loggerhead shrike	*Lanius ludovicianus*	SSC, BCC	Primarily a year-round resident in open habitats including woodland, grassland, savannah and agricultural areas. Prefers areas with sparse shrubs, trees, posts, and other suitable perches for foraging. Preys upon large insects and small vertebrates. Nests are well-concealed in a densely-foliaged shrub or tree.	A	The BSA and immediate vicinity are residential development and riparian woodland which do not provide nesting habitat for the species. The BSA does not contain open areas such as agricultural fields, grasslands or marsh that are typically used by this species.
California black rail	*Laterallus jamaicensis coturniculus*	ST, CFP, BCC	Resident in marshes (saline to freshwater) with dense vegetation below four inches in height. Prefers larger, undisturbed marshes close to a major water source.	A	The BSA is not within the known breeding distribution of this species. The BSA lacks any marsh habitat that this species requires for nesting and foraging.
Alameda song sparrow	*Melospiza melodia pusillula*	BCC, SSC	Year-round resident of salt marshes bordering the south arm of San Francisco Bay. Inhabits primarily pickleweed marshes; nests placed in marsh vegetation, typically shrubs such as gumplant.	A	The BSA is not within the known breeding distribution of this species. The BSA lacks any marsh habitat that this species requires for nesting and foraging.

Common Name	Scientific Name	Status	General Habitat Description	Habitat Present/ Absent	Rationale
Samuel's song sparrow	*Melospiza melodia samuelis*	SSC, BCC	Resident of salt marshes along the north side of San Francisco and San Pablo Bays. Inhabits tidal sloughs in the *Salicornia* marshes; nests in *Grindelia* bordering slough channels.	A	The BSA is not within the known breeding distribution of this species. The BSA lacks any marsh habitat that this species requires for nesting and foraging.
San Pablo song sparrow	*Melospiza melodia samuelis*	BCC, SSC	Year-round resident of tidal marshes along the north side of San Francisco and San Pablo Bays. Typical habitat is dominated by pickleweed, with gumplant and other shrubs present in the upper zone for nesting. May forage in areas adjacent to marshes.	A	The BSA lacks any marsh habitat that this species requires for nesting and foraging. The nearest documented occurrence for this species is located approximately 4 miles northwest of the BSA (CDFW 2017a).
long-billed curlew	*Numenius americanus*	BCC	Winter visitor to large coastal estuaries, upland herbaceous areas, and agricultural lands. Within California, nests only in the northeastern portion of the state in wet meadow habitat.	A	Long-billed curlew does not nest in Marin County. The BSA lacks beach, agricultural or herbaceous upland habitat capable of supporting nesting by this species.
black-crowned night heron	*Nycticorax nycticorax*	None	(Rookery) colonial nester, usually in trees, occasionally in tule patches. Rookery sites located adjacent to foraging areas: lake margins, mud-bordered bays, marshy spots.	A	Suitable rookery trees are absent from the BSA and immediate surrounds, however, this species may occasionally fly over the BSA.

Common Name	Scientific Name	Status	General Habitat Description	Habitat Present/ Absent	Rationale
Bryant's savannah sparrow	*Passerculus sandwichensis alaudinus*	SSC	Year-round resident subspecies, associated with the coastal fog belt. Occupies upper tidally-influenced habitats and moist grasslands, often occurring where wetland communities merge into grassland. Nests in vegetation on or near the ground.	A	The BSA and immediate vicinity are residential development and riparian woodland which do not provide nesting habitat for the species. The BSA lacks the tidally influenced habitats or grasslands that this species requires.
American white pelican	*Pelecanus erythrorhynchos*	SSC	(Nesting colony) colonial nester on large interior lakes. Nests on large lakes, providing safe roosting and breeding places in the form of well-sequestered islets. Winter visitor to the San Francisco Bay Area.	A	This species does not nest in Marin County. Additionally, suitable foraging habitat does not occur within 2 miles of the BSA.
California brown pelican	*Pelecanus occidentalis californicus*	FD, SD, CFP	(Nesting colony) colonial nester on coastal islands just outside the surf line. Nests on coastal islands of small to moderate size which afford immunity from attack by ground-dwelling predators.	A	This species does not nest in Marin County. Additionally, suitable foraging habitat does not occur within 2 miles of the BSA.
short-tailed albatross	*Phoebastria albatrus*	FE, SSC	Highly pelagic; comes to land only when breeding. Nests on remote Pacific islands. A rare non-breeding visitor to the eastern Pacific.	A	Short-tailed albatross does not nest in Marin County. Additionally, suitable marine foraging habitat does not occur within 5 miles of the BSA.
Nuttall's woodpecker	*Picoides nuttallii*	BCC	Resident in lowland woodlands throughout much of California west of the Sierra Nevada. Typical habitat is dominated by oaks.	HP	Riparian woodland habitat within and surrounding the BSA may provide suitable nest-trees and foraging habitat which may support this species.

Common Name	Scientific Name	Status	General Habitat Description	Habitat Present/ Absent	Rationale
purple martin	*Progne subis*	SSC	Summer resident. In northwestern California, typically breeds in coniferous forest and woodlands. Nest in tree cavities, usually high off the ground, and in the cavities of manmade structures (e.g. bridges, utility poles). Forages for aerial insects.	A	The BSA contains riparian woodland dominated by California bay trees which do not provide cavities which can support nesting. No snags or cavities were observed within the BSA capable of supporting nesting by this species. However, this species may be observed foraging within the BSA.
California clapper rail	*Rallus longirostris obsoletus*	FE, SE, CFP	Resident in tidal marshes of the San Francisco Bay Estuary. Requires tidal sloughs and mud flats for foraging, and dense vegetation for nesting. Associated with abundant growth of cordgrass and pickleweed. Largest populations in south San Francisco Bay.	A	The BSA is not within the known breeding distribution of this species. The BSA lacks any salt marsh habitat which this species requires for nesting and foraging.
bank swallow	*Riparia riparia*	ST	Migrant in riparian and other lowland habitats in western California. Colonial nester in riparian areas with vertical cliffs and bands with fine-textured or fine-textured sandy soils near streams, rivers, lakes or the ocean.	A	Bank swallow does not nest in Marin County. The BSA lacks any cliff habitat which this species requires for nesting. The species may pass through the BSA on migration.

Common Name	Scientific Name	Status	General Habitat Description	Habitat Present/ Absent	Rationale
Allen's hummingbird	*Selaphorus sasin*	BCC	Breeds along the California coastline in habitats including mixed evergreen, Douglas fir, redwood and Bishop pine forests, riparian woodlands, nonnative eucalyptus and planted cypress groves, and occasionally live oak woodlands and coastal scrub with at least a scattering of trees, such as on north-facing slopes	HP	Riparian woodland habitat within and surrounding the BSA may provide suitable nest trees and foraging habitat in surrounding residential development may support this species.
rufous hummingbird	*Selasphorus rufus*	BCC	Spring migrant; does not breed in California. Favors habitats rich in nectar-producing flowers. Nests in berry tangles, shrubs, deciduous forests and conifers. Favors habitats rich in nectar-producing flowers.	A	The BSA is outside of the known breeding range for this species, but rufous hummingbird may be observed during migration seasons.
California least tern	*Sternula antillarum browni*	FE, SE, CFP	Summer resident along the coast from San Francisco Bay south to northern Baja California; inland breeding also very rarely occurs. Nests colonially on barren or sparsely vegetated areas with sandy or gravelly substrates near water, including beaches, islands, and gravel bars.	A	The BSA does not contain sandy or gravel bars to support nesting of this species and is outside the known range.

Common Name	Scientific Name	Status	General Habitat Description	Habitat Present/ Absent	Rationale
northern spotted owl	*Strix occidentalis caurina*	FT, ST, SSC	Old-growth forests or mixed stands of old-growth and mature trees. Occasionally in younger forests with patches of big trees. Prefers high, multistory canopy dominated by big trees, trees with cavities or broken tops, woody debris and space under canopy.	A	The BSA and immediate vicinity are residential development and riparian woodland which does not typically support the species or its preferred prey. This species has been recorded within 0.5 mile of the BSA; however, the observations are in areas of undeveloped and forested open space. The BSA is greater than 0.3 mile from the nearest potentially suitable nesting habitat.
yellow-headed blackbird	*Xanthocephalus xanthocephalus*	SSC	Migrant and local summer resident. Nests colonially in freshwater emergent wetlands with dense vegetation and deep water, often along borders of lakes or larger ponds. Forages primarily on large aquatic insects during the breeding period.	A	The BSA does not contain any open waters such as ponds, lakes or marsh habitat that supports foraging or nesting by the colony. The shrubs located along the banks in the vicinity of the BSA are not sufficiently dense or large enough to support nesting by this species.
Mammals					
pallid bat	*Antrozous pallidus*	SSC, WBWG: High	Found in deserts, grasslands, shrublands, woodlands, and forests. Most common in open, forages along river channels. Roost sites include old ranch buildings, rocky outcrops and caves within sandstone outcroppings. Roosts must protect bats from high temperatures. Very sensitive to disturbance of roosting sites.	A	The BSA and immediate vicinity are residential development and riparian woodland with no rock outcroppings or ranch type buildings to provide roosting sites. The bridge has no exposed cracks or seams and is regularly disturbed by vehicles and pedestrians, making the structure and the surrounding area unsuitable for the species.

Common Name	Scientific Name	Status	General Habitat Description	Habitat Present/ Absent	Rationale
Point Reyes mountain beaver	*Aplodontia rufa phaea*	SSC	The Point Reyes mountain beaver is only known to occur in western Marin County, almost entirely within Point Reyes National Seashore. It occurs on cool, moist, north-facing slopes in moderately dense coastal scrub. Burrows are typically constructed in dense thickets or in forest openings; and it feeds on coyote brush, sword fern, cow parsnip, black berries, poison oak, California nettle, and thistle.	A	The BSA is not within the known breeding distribution of this species. The BSA and immediate vicinity are residential development and riparian woodland. The BSA does not contain any coastal scrub habitat which is required by the species.
ringtail (ring-tailed cat)	*Bassariscus astutus*	CFP	Is widely distributed throughout most of California, but absent from some portions of the Central Valley and northeastern California. The species is nocturnal, primarily carnivorous and is associated with a mixture of dry forest and shrubland in close association with rocky areas and riparian habitat, using hollow trees and cavities for shelter.	A	The BSA and immediate vicinity are residential development and riparian woodland with an open understory. Anthropogenic disturbances in the area and an absence of suitable trees to provide cavities make the species unlikely to occur.
Townsend's big-eared bat	*Corynorhinus townsendii*	SC, SSC, WBWG: High	This species is associated with a wide variety of habitats from deserts to mid-elevation mixed coniferous-deciduous forest. Females form maternity colonies in buildings, caves and mines and males roost singly or in small groups. Foraging occurs in open forest habitats where they glean moths from vegetation.	A	The BSA and immediate vicinity are residential development and riparian woodland. Buildings in the area are maintained and do not provide suitable roosting habitat. Additionally, there are no caves, mines or suitable openings in the bridge structure to support roosting by the species within the BSA.

Common Name	Scientific Name	Status	General Habitat Description	Habitat Present/ Absent	Rationale
western red bat	*Lasiurus blossevillii*	SSC, WBWG High	This species is typically solitary, roosting primarily in the foliage of trees or shrubs. Day roosts are commonly in edge habitats adjacent to streams or open fields, in orchards, and sometimes in urban areas. There may be an association with intact riparian habitat (willows, cottonwoods, and sycamore).	A	The BSA and immediate vicinity are residential development and disturbed riparian woodland. The complexity of edge habitats required by the species is not present within the BSA. The species may forage over the BSA.
hoary bat	*Lasiurus cinereus*	WBWG: Medium	Prefers open habitats or habitat mosaics, with access to trees for cover and open areas or habitat edges for feeding. Roosts in dense foliage of medium to large trees. Feeds primarily on moths. Requires water.	A	The BSA and immediate vicinity are residential development and riparian woodland. The BSA does not provide suitable open foraging habitat and no potential roost sites are present.
San Pablo vole	*Microtus californicus sanpabloensis*	SSC	Saltmarshes of San Pablo Creek, on the south shore of San Pablo Bay. Constructs burrow in soft soil. Feeds on grasses, sedges and herbs. Forms a network of runways leading from the burrow	A	The BSA and immediate vicinity are residential development and riparian woodland which do not provide habitat for the species. Salt marshes that support this species do not occur within or adjacent to the BSA.
fringed myotis	*Myotis thysanodes*	WBWG: High	Associated with a wide variety of habitats including mixed coniferous-deciduous forest and redwoods/sequoia groves. Buildings, mines, and large snags are important day and night roosts.	A	The BSA and immediate vicinity are residential development and riparian woodland. No snags are present in or adjacent to the BSA to provide roosting habitat. The bridge structure has no suitable seams, cracks or crevices that might provide roosting habitat for the species. The species may occasionally fly through or forage over the BSA.

Common Name	Scientific Name	Status	General Habitat Description	Habitat Present/ Absent	Rationale
long-legged myotis	*Myotis volans*	WBWG High	Typically occupies mountainous or relatively rugged areas, dry coniferous forests, and sometimes oak or streamside woodlands, and deserts. Large hollow trees, rock crevices and buildings are important day roosts. Other roosts include caves, mines and buildings.	A	The BSA and immediate vicinity are residential development and riparian woodland. The BSA does not contain mines abandoned buildings or snags for roosting. There are no suitable openings in the bridge structure such as seams or cracks to allow bats to roost. The species may occasionally fly through or forage over the BSA.
salt-marsh harvest mouse	*Reithrodontomys raviventris*	FE, SE, CFP	Found only in the saline emergent wetlands of San Francisco Bay and its tributaries. Pickleweed is primary habitat. Does not burrow, but builds loosely organized nests. Require higher areas for flood escape.	A	The BSA and immediate vicinity are residential development and riparian woodland. Salt marshes that are required to support this species do not occur in the BSA.
Suisun shrew	*Sorex ornatus sinuosus*	SSC	Tidal marshes of the northern shores of San Pablo and Suisun Bays. Require dense low-lying cover and driftweed and other litter above the mean high tide line for nesting and foraging.	A	The BSA and immediate vicinity are residential development and riparian woodland. Marshes and tidal marine environments that are required to support nesting by the species do not occur in the BSA.
salt-marsh wandering shrew	*Sorex vagrans halicoetes*	SSC	Confined to small remnant stands of salt marsh found around the southern arm of the San Francisco Bay in San Mateo, Santa Clara, Alameda and Contra Costa counties. Inhabits salt marshes that provide dense cover with driftwood and other debris.	A	The BSA and immediate vicinity are residential development and riparian woodland. Salt marshes that are required to support nesting by the species do not occur in the BSA.

Common Name	Scientific Name	Status	General Habitat Description	Habitat Present/ Absent	Rationale
American badger	*Taxidea taxus*	SSC	Most abundant in drier open stages of most shrub, forest, and herbaceous habitats, with friable soils. Requires friable soils and open, uncultivated ground. Preys on burrowing rodents.	A	The BSA and immediate vicinity are residential development and riparian woodland. Friable soils which support the preferred prey for badgers and badger dens do not occur within the BSA.
Point Reyes jumping mouse	*Zapus trinotatus orarius*	SSC	Bunch grass marshes on the uplands of Point Reyes in areas safe from continuous inundation. Builds grassy nests on ground under vegetation, burrows in winter.	A	The BSA and immediate vicinity are residential development and riparian woodland. The BSA lacks marsh or grasslands that this species requires for nesting and foraging.
Amphibians and Reptiles					
western pond turtle	*Actinemys marmorata*	SSC	Associated with permanent or nearly permanent water in a wide variety of habitats. Requires basking sites. Nests sites may be found up to 0.5 kilometers from water.	A	There are no known occurrences of this species in the watershed or vicinity. The BSA is over 2.5 miles from the nearest documented occurrence in a different watershed (CDFW 2017a).
California giant salamander	*Dicamptodon californiense*	SSC	Occurs in the north-central Coast Ranges. Moist coniferous and mixed forests are typical habitat; also uses woodland and chaparral. Adults are terrestrial and fossorial, breeding in cold, permanent or semi-permanent streams. Larvae usually remain aquatic for over a year.	A	There are no known occurrences of this species within 2.5 miles of the BSA. The modifications to the creek channel within the BSA including retaining walls and concrete bed reduce potential for this species to occur within the BSA.

Common Name	Scientific Name	Status	General Habitat Description	Habitat Present/ Absent	Rationale
foothill yellow-legged frog	*Rana boylii*	SSC	Found in or near rocky streams in a variety of habitats. Prefers partly-shaded, willow streams and riffles with a rocky substrate; requires at least some cobble-sized substrate for egg-laying. Needs at least 15 weeks to attain metamorphosis. Feeds on both aquatic and terrestrial invertebrates.	A	This species has not been documented within the watershed, and does not occur outside of aquatic habitats. Documented occurrences are in different watersheds than the BSA (CDFW 2017a).
California red-legged frog	*Rana draytonii*	FT, SSC	Lowlands and foothills in or near permanent sources of deep water with dense, shrubby or emergent riparian vegetation. Requires 11 to 20 weeks of inundation for larval development. Must have access to estivation habitat.	A	The BSA and immediate vicinity are residential development and riparian woodland. No ponds, lakes, or creek backwaters exist nearby that could provide adequate still water habitat to support breeding by the species. This species is not known within 5 miles of the BSA.
Fishes					
green sturgeon	*Acipenser medirostris*	FT, SSC	Spawn in the Sacramento River and the Klamath River. Spawn at temperatures between 8-14 degrees C. Preferred spawning substrate is large cobble, but can range from clean sand to bedrock.	A	The BSA is not within the known spawning distribution of this species. A total barrier to fish passage at Bolinas Avenue prevents anadromous fish such as sturgeon from accessing the BSA.
tidewater goby	*Eucyclogobius newberryi*	FE, SSC	Brackish water habitats along the California coast from Agua Hedionda Lagoon, San Diego County to the mouth of the Smith River. Found in willow lagoons and lower stream reaches, they need fairly still but not stagnant water and high oxygen levels.	A	The BSA is not within the known distribution of this species. Additionally, the BSA lacks any lagoon habitat, which is required by this species.

Common Name	Scientific Name	Status	General Habitat Description	Habitat Present/ Absent	Rationale
delta smelt	*Hypomesus transpacificus*	FT, SE, RP	Lives in the Sacramento-San Joaquin estuary in areas where salt and freshwater systems meet. Occurs seasonally in Suisun Bay, Carquinez Strait and San Pablo Bay.	A	The BSA is not within the known spawning distribution of this species. Additionally, the BSA lacks any brackish water habitat which is required by this species.
Tomales roach	*Lavinia symmetricus* ssp. *symmetricus*	SSC	Habitat generalists. Tolerant of relatively high temperatures and low oxygen levels; however, unable to tolerate very saline water. Tributaries to Tomales Bay.	A	The BSA is not within the known spawning distribution of this species, and Fairfax Creek is not tributary to Tomales Bay.
Coho salmon - central California coast	*Oncorhynchus kisutch*	FE, SE	State listing is limited to Coho south of San Francisco Bay. Federal listing is limited to naturally spawning populations in streams between Humboldt County and Santa Cruz County. Spawn in coastal streams 4-14C.	A	This species is considered extirpated from the waters of San Francisco Bay and its tributaries (NMFS 2012).
steelhead - central California coast	*Oncorhynchus mykiss*	FT	Occurs from the Russian River south to Soquel Creek and Pajaro River. Also in San Francisco and San Pablo Bay Basins. Adults migrate upstream to spawn in cool, clear, well-oxygenated streams. Juveniles remain in fresh water for 1 or more years before migrating downstream to the ocean.	A	A total barrier to fish passage at Bolinas Avenue prevents anadromous fish such as steelhead from being able to access the creek. Therefore, steelhead and suitable habitat are absent from the BSA.

Common Name	Scientific Name	Status	General Habitat Description	Habitat Present/ Absent	Rationale
chinook salmon – Sacramento River winter-run	*Oncorhynchus tshawytscha*	FE, SE, RP	Occurs in the Sacramento River below Keswick Dam. Spawns in Sacramento River but not in tributary streams. Adults migrate upstream to spawn in cool, clear, well-oxygenated streams.	A	The BSA is not within the known spawning distribution of this species, and a total barrier to fish passage at Bolinas Avenue prevents anadromous fish such as smelt from being able to access Fairfax Creek and the BSA.
chinook salmon - Central Valley spring-run	*Oncorhynchus tshawytscha*	FT,ST	Occurs in the Sacramento River below Keswick Dam. Spawns in the Sacramento River but not in tributary streams. Adults migrate upstream to spawn in cool, clear, well-oxygenated streams.	A	The BSA is not within the known spawning distribution of this species, and a total barrier to fish passage at Bolinas Avenue prevents anadromous fish such as smelt from being able to access Fairfax Creek and the BSA.
chinook salmon - California coastal ESU	*Oncorhynchus tshawytscha*	FT, RP	California Coastal Chinook Salmon ESU includes all naturally spawned populations of Chinook salmon from rivers and streams south of the Klamath River (exclusive) to the Russian River (inclusive). Adult numbers depend on pool depth and volume, amount of cover, and proximity to gravel.	A	The BSA is not within the known spawning distribution of this species, and a total barrier to fish passage at Bolinas Avenue prevents anadromous fish such as smelt from being able to access Fairfax Creek and the BSA.
Sacramento splittail	*Pogonichthys macrolepidotus*	SSC	Endemic to California's Central Valley and the Sacramento-San Joaquin Delta. Primarily freshwater fish, but are tolerant of moderate salinity. Spawn on submerged vegetation in temporarily flooded upland and riparian habitat.	A	The BSA is not within the spawning or known distribution of this species. The BSA does not contain any flooded upland or slow slough like habitat which this species requires for spawning.

Common Name	Scientific Name	Status	General Habitat Description	Habitat Present/ Absent	Rationale
longfin smelt	*Spirinchus thaleichthys*	FC, ST, SSC	Euryhaline, nektonic and anadromous. Found in open waters of estuaries, mostly in middle or bottom of water column. Prefer salinities of 15 to 30 ppt, but can be found in completely freshwater to almost pure seawater.	A	The BSA is not within the known spawning distribution of this species, and a total barrier to fish passage at Bolinas Avenue prevents anadromous fish such as smelt from being able to access Fairfax Creek and the BSA.
Pacific lamprey	*Entosphenus (=Lampetra) tridentatus*	SSC	Spawn between March and July in gravel bottomed streams in riffle habitat. Larvae drift downstream to areas of low velocity and fine substrates and are relatively immobile in the stream substrates.	A	A total barrier to fish passage at Bolinas Avenue prevents anadromous fish such as lamprey from being able to access the creek. This species and its habitat are not present.
eulachon	*Thaleichthys pacificus*	FT, SSC	Occur in nearshore ocean waters and to 1,000 feet (300 m) in depth, except for the brief spawning runs into their natal (birth) streams. Ranges from northern California to southwest Alaska and southeastern Bering Sea.	A	The BSA is not within the known spawning distribution of this species. The BSA lacks any marine or brackish water habitats which may be used for foraging or rearing habitat by the species.
Invertebrates					
Tomales isopod	*Caecidotea tomalensis*	SSI	Inhabits localized fresh-water ponds or streams with still or near-still water in several San Francisco Bay Area counties. Found in several localities from Sonoma to San Mateo counties. This aquatic species prefers practically still to slow-moving, vegetated water, such as from spring-fed ponds.	A	This species requires ponds that are fed by springs, these features are not present within the BSA. The BSA does contain freshwater, however it does not support aquatic vegetation.

Common Name	Scientific Name	Status	General Habitat Description	Habitat Present/ Absent	Rationale
Marin blind harvestman	*Calicina diminua*	SSI	Occurs in mesic habitats, but are absent from situations where soils are saturated or periodically inundated. Most species occur under medium to large undisturbed rocks that are in contact with the soil.	A	The BSA and immediate vicinity are residential development and riparian woodland. Any rock rip rap at the base of the bridge is a recent addition and is unlikely to support this species because of creek flows through the BSA.
San Bruno elfin butterfly	*Callophrys mossii bayensis*	FE, SSI	Inhabits coastal mountainous areas with grassy ground cover, mainly in the vicinity of San Bruno Mountain, San Mateo County. Colonies are located on steep, north-facing slopes within the fog belt. Larval host plant is *Sedum spathulifolium.*	A	The BSA is not within the known breeding distribution of this species. The BSA and immediate vicinity are residential development and riparian woodland. The BSA contains no grassland that may support the host plants required by the species.
monarch butterfly	*Danaus plexippus*	SSI	Winter roost sites extend along the coast from northern Mendocino to Baja California, Mexico. Roosts located in wind-protected tree groves (eucalyptus, Monterey pine, Monterey cypress), with nectar and water sources nearby.	A	Roost sites for monarchs are primarily in eucalyptus groves along the coast. No groves used as roost sites have been recorded within 7 miles of the BSA. The BSA is inland of the coast; however, the species may migrate through the area in route to roost and foraging sites.
black abalone	*Haliotes cracherodii*	FE, SSI	Generally occur in areas of moderate to high surf in mid to low rocky intertidal areas.	A	The BSA does not contain any intertidal shores or marine environments which are required to support the species.
white abalone	*Haliotis sorenseni*	FE, SSI	Rocky pinnacles and deep reefs in southern California; especially those off the Channel Islands. Live at depths from 80 to 200 feet.	A	The BSA does not contain any intertidal shores or marine environments which are required to support the species.

Common Name	Scientific Name	Status	General Habitat Description	Habitat Present/ Absent	Rationale
Ricksecker's water scavenger beetle	*Hydrochara ricksekeri*	SSI	Aquatic; known only from pond habitats scattered around the San Francisco Bay area.	A	The BSA and immediate vicinity are residential development and riparian woodland. The creek within the BSA does not provide pond habitat known to support the species.
mission blue butterfly	*Icaricia icarioides missionensis*	FE, RP, SSI	Inhabits grasslands of the San Francisco Peninsula. Three larval host plants: *Lupinus albifrons, L. variicolor*, and *L. formosus*, of which *L. albifrons* is favored.	A	The BSA is not within the known breeding distribution of this species. The BSA and immediate vicinity are residential development and riparian woodland. The BSA does not contain grassland required to support the host plants of the species.
Bay checkerspot butterfly	*Euphydryas editha bayensis*	FT, SSI, RP	Restricted to native grasslands on outcrops of serpentine soil in the vicinity of San Francisco Bay. *Plantago erecta* is the primary host plant; *Orthocarpus densiflorus* and *O. purpurscens* are the secondary host plants.	A	The BSA is not within the known breeding distribution of this species. The BSA and immediate vicinity are residential development and riparian woodland. The BSA does not contain grassland required to support the host plants of the species.
Callippe silverspot butterfly	*Speyeria callippe*	FE, SSI	Restricted to the northern coastal scrub of the San Francisco Peninsula. Host plant is *Viola pedunculata*. Most adults found on east-facing slopes; males congregate on hilltops in search of females.	A	The BSA is not within the known breeding distribution of this species. The BSA and immediate vicinity are residential development and riparian woodland. The BSA does not contain grassland required to support the host plants of the species.
Myrtle's silverspot butterfly	*Speyeria zerene myrtleae*	FE, RP, SSI	Restricted to the foggy, coastal dunes/hills of the Point Reyes peninsula; extirpated from coastal San Mateo County. Larval food plant thought to be *Viola adunca*.	A	The BSA is not within the known breeding distribution of this species. The BSA and immediate vicinity are residential development and riparian woodland. The BSA does not contain grassland to support the host plants or foraging by the species.

Common Name	Scientific Name	Status	General Habitat Description	Habitat Present/ Absent	Rationale
California freshwater shrimp	*Syncaris pacifica*	FE, SE, RP, SSI	Endemic to Marin, Napa, and Sonoma counties. Found in low elevation, low gradient streams where riparian cover is moderate to heavy. Willow pools away from main stream flow. Winter: undercut banks with exposed roots. Summer: leafy branches touching water.	A	The BSA is not within the known breeding distribution of this species. Suitable habitat for the species is primarily found within northern Marin County along the border with Sonoma County. This species has not been documented in Fairfax Creek.
Plants and Sensitive Natural Communities					
Sensitive Natural Communities					
Coastal Brackish Marsh, Coastal Terrace Prairie, Northern Coastal Salt Marsh, Serpentine Bunchgrass	NA	NA	NA	A	The BSA does not contain any of these habitats. No further actions are recommended for these Sensitive Natural Communities.
Sensitive Plants					
Sonoma alopecurus	*Alopecurus aequalis* var. *sonomensis*	FE, CNPS 1B.1	Freshwater marsh and swamp, and riparian scrub. 5-360 m. Flowers May-July.	HP	All known occurrences of this species in the vicinity of the BSA are associated with coastal freshwater marsh and swamp, and riparian scrub. The BSA limited, poor quality, habitat for this species. No *Alopecurus* species were observed. No further actions are recommended for this species.
Napa false indigo	*Amorpha californica* var. *napensis*	CNPS 1B.2	Broadleaf upland forest, chaparral, cismontane woodland; openings in forest, woodland, and chaparral. 120-2,000 m. Flowers April-July.	A	The BSA provides poor habitat for this species. This woody perennial was not observed during the field surveys, which were conducted when this species would be identifiable. No further actions are recommended for this species.

Common Name	Scientific Name	Status	General Habitat Description	Habitat Present/ Absent	Rationale
Bent-flowered fiddleneck	*Amsinckia lunaris*	BLMS, CNPS 1B.2	Cismontane woodland, valley and foothill grassland. 5-500 m. Flowers March-June.	A	The natural areas within the BSA are too shady for this species. This perennial species was not observed during the field surveys, which were conducted during the flowering period. No further actions are recommended for this species.
Franciscan manzanita	*Arctostaphylos franciscana*	FE, CNPS 1B.1	Serpentinite outcrops in chaparral. 60-300 m. Flowers January-April.	A	All known occurrences of this species in the vicinity of the BSA are associated with serpentine substrates. The BSA lacks suitable serpentine soils and chaparral habitat. No manzanitas (a woody perennial) were observed in the BSA. No further actions are recommended for this species.
Mt. Tamalpais manzanita	*Arctostaphylos montana* ssp. *montana*	CNPS 1B.3	Generally serpentinite soil, valley and foothill grassland. 160-760 m. Flowers February-April.	A	All known occurrences of this species in the vicinity of the BSA are associated with serpentine substrates. The BSA lacks suitable serpentine soils; and no manzanitas (a woody perennial) were observed in the BSA. No further actions are recommended for this species.
Presidio manzanita	*Arctostaphylos montana* ssp. *ravenii*	FE,SE, CNPS 1B.1	Serpentinite soil, chaparral, coastal prairie, coastal scrub. 20-215 m. Flowers February-April.	A	All known occurrences of this species in the vicinity of the BSA are associated with serpentine substrates. The BSA lacks suitable serpentine soils and chaparral habitat. No manzanitas (a woody perennial) were observed in the BSA. No further actions are recommended for this species.
Marin manzanita	*Arctostaphylos montana* ssp. *virgata*	CNPS 1B.2	Broad-leaved upland forest, closed cone coniferous forest, chaparral, north coast coniferous forest, generally on sandstone or granitic soil. 160-760 m. Flowers December-March.	A	The BSA lacks suitable habitat. No manzanitas (a woody perennial) were observed. No further actions are recommended for this species.

Common Name	Scientific Name	Status	General Habitat Description	Habitat Present/ Absent	Rationale
Marsh sandwort	*Arenaria paludicola*	FE, SE, CNPS 1B.1	Freshwater marsh. 10-170 m. Flowers May-August.	A	No suitable habitat. No further actions are recommended for this species.
Coastal marsh milk-vetch	*Astragalus pycnostachyus* var. *pycnostachyus*	BLMS, CNPS 1B.2	Coastal salt marshes, coastal dunes, coastal scrub, stream sides. 0-30 m. Flowers April-October.	A	No suitable habitat. No further actions are recommended for this species.
Alkali milk-vetch	*Astragalus tener* var. *tener*	CNPS 1B.2	Alkali playa, valley and foothill grassland, vernal pools. 1-170 m. Flowers March-June.	A	No suitable habitat. No further actions are recommended for this species.
Tiburon mariposa lily	*Calochortus tiburonensis*	FT, ST, CNPS 1B.1	Serpentinite soil, valley and foothill grassland. Open rocky, serpentine. 50-150 m. Flowers March-June.	A	No suitable habitat. No further actions are recommended for this species.
Seaside bittercress	*Cardamine angulata*	CNPS 2B.1	North coast coniferous forest, lower montane coniferous forest, wet places. 65-951 m. Flowers April-June.	A	This perennial species was not observed during the field surveys, which were conducted during the flowering period. The closest known occurrence of this species is a 1915 observation near the Town of Lagunitas, over 5 miles away. No further actions are recommended for this species.
Bristly sedge	*Carex comosa*	CNPS 2B.2	Marshes and swamps, lake margins, wet places. 5-1,005 m. Flowers July-September.	A	Closest known occurrence was in 1866 near San Francisco. No suitable habitat. No further actions are recommended for this species.
Lyngbye's sedge	*Carex lyngbyei*	CNPS 1B.1	Brackish or freshwater marshes. 0-10 m. Flowers May-August.	A	Closest known occurrence was in 1927 in Stinson Beach. No suitable habitat. No further actions are recommended for this species.
Tiburon Indian paintbrush	*Castilleja affinis* ssp. *neglecta*	FE, ST, CNPS 1B.2	Rocky serpentinite soil, valley and foothill grassland. 75-400 m. Flowers April-June.	A	No suitable habitat. No further actions are recommended for this species.
Mason's ceanothus	*Ceanothus masonii*	CNPS 1B.2	Dry rocky areas, chaparral. 230-500 m. Flowers March-April.	A	No suitable habitat. No further actions are recommended for this species.

Common Name	Scientific Name	Status	General Habitat Description	Habitat Present/ Absent	Rationale
Point Reyes bird's beak	*Chloropyron maritimum* ssp. *palustre*	BLMS, CNPS 1B.2	Coastal salt marsh. 0-10 m. Flowers June-October.	A	No suitable coastal salt marsh habitat. No further actions are recommended for this species.
Soft bird's beak	*Chloropyron molle (previously Cordylanthus mollis* ssp. *mollis)*	FE, SR CNPS 1B.2	Marshes and swamps (coastal salt). 0-10 m. Flowers July-November.	A	No suitable habitat. No further actions are recommended for this species.
San Francisco Bay spineflower	*Chorizanthe cuspidata* var. *cuspidata*	CNPS 1B.2	Sandy soil, coastal bluff scrub, coastal dunes, coastal prairie, coastal scrub. 3-250 m. Flowers April-August.	A	No suitable habitat. No further actions are recommended for this species.
Franciscan thistle	*Cirsium andrewsii*	CNPS 1B.2	Moist places in broadleafed upland forest on the coast, coastal bluff scrub, coastal prairie, and coastal scrub. 0-150 m. Flowers March-July.	A	No suitable habitat. No further actions are recommended for this species.
Mt. Tamalpais thistle	*Cirsium hydrophilum* var. *vaseyi*	CNPS 1B.2	Moist places in broadleafed upland forest, chaparral, meadows and seeps. Serpentine streams. 240-620 m Flowers May-August.	A	No suitable serpentine habitat. No further actions are recommended for this species.
Presidio clarkia	*Clarkia franciscana*	FE, SE, CNPS 1B.1	Serpentinite soil, valley and foothill grassland. 25-335 m. Flowers May-July.	A	No suitable serpentine habitat. No further actions are recommended for this species.
Round-headed Chinese houses	*Collinsia corymbosa*	CNPS 1B.2	Coastal dunes.0-20 m. Flowers April-June.	A	No suitable dune habitat. No further actions are recommended for this species.
San Francisco collinsia	*Collinsia multicolor*	CNPS 1B.2	Closed-cone coniferous forest, coastal scrub, on decomposed shale in humus. 30-250m. Flowers March-May.	A	No suitable habitat. No further actions are recommended for this species.

Common Name	Scientific Name	Status	General Habitat Description	Habitat Present/ Absent	Rationale
Robust spineflower	*Chorizanthe robusta* var. *robusta*	FE, Rank 1B.1	Chaparral (maritime), cismontane woodland (openings), coastal dunes, coastal scrub, sandy or gravelly.3-300 m. Flowers April-September.	A	All known occurrences of this species in the vicinity of the BSA are associated with sandy/gravelly soils in coastal habitat. The BSA lacks suitable sandy/gravelly soils in coastal habitat. No further actions are recommended for this species.
San Francisco Bay spineflower	*Chorizanthe cuspidata* var. *cuspidata*	CNPS 1B.2	Coastal bluff scrub, coastal dues, coastal prairie. Coastal scrub, sandy. 10-305 m. Flowers June-August.	A	All known occurrences of this species in the vicinity of the BSA are associated with sandy soils in coastal habitat. The BSA lacks suitable sandy coastal habitat. No further actions are recommended for this species.
Sonoma spineflower	*Chorizanthe cuspidata* var. *valida*	FE, SE, Rank 1B.1	Sandy coastal prairie. 10-305 m. Flowers June-August.	A	All known occurrences of this species in the vicinity of the BSA are associated with sandy soils in coastal prairie habitat. The BSA lacks suitable sandy coastal prairie habitat. No further actions are recommended for this species.
Golden larkspur	*Delphinium luteum*	FE, SR, CNPS 1B.1	Chaparral, coastal prairie, coastal scrub/rocky. 1-100 m. Flowers March-May.	A	The BSA is not within the critical habitat area. This site lacks suitable chaparral, coastal prairie habitat. No further actions are recommended for this species.
Western leatherwood	*Dirca occidentalis*	CNPS 1B.2	Mesic sites, broadleafed upland forest, closed-cone conifer forest, chaparral, cismontane woodland, north coast coniferous forest, riparian forest, riparian woodland. 25-425 m. Flowers January- April.	A	The natural areas within the BSA are in a narrow channelized stream zone that provides low quality habitat. This perennial woody shrub species was not observed during the field surveys. No further actions are recommended for this species.
Tiburon buckwheat	*Eriogonum luteolum* var. *caninum*	CNPS 1B.2	Serpentinite soil, chaparral, coastal prairie, valley and foothill grassland. 0-700 m. Flowers June-September.	A	No suitable habitat. No buckwheats were observed during surveys. No further actions are recommended for this species.

Common Name	Scientific Name	Status	General Habitat Description	Habitat Present/ Absent	Rationale
Koch's cord moss	*Entosthodon kochii*	CNPS 1B.3	Cismontane woodland and valley foothill grassland. Know from Plumas NF on serpentine river bank. 500-1,000 m. Flowers N/A.	A	No suitable serpentine habitat. No further actions are recommended for this species.
Minute pocket moss	*Fissidens pauperculus*	USFSS, CNPS 2B.2	North coast coniferous forest. On damp soil on the coast and in dry streambeds and banks on soil in humus comprised of heavily decayed wood. 10-100 m. Flowers N/A (best observed during the wet season).	HP	Though not coniferous forest, mesic substrates within the BSA have limited the potential to support this species. Though scour alters the duff in large storm events. This species was not observed during the field surveys, which occurred during the wet season when this species is identifiable. No further actions are recommended for this species.
Marin checker lily	*Fritillaria lanceolata* var. *tristulis (F. affinis* var. *t.)*	CNPS 1B.1	Coastal bluff scrub, coastal prairie, coastal scrub. Spruces and riparian areas and rocky outcrops. 15-150 m. Flowers February-April.	A	Though not coastal, there is a narrow strip of riparian like habitat adjacent to the creek. No *Fritillaria* were observed during the field surveys, which were conducted during the flowering period. No further actions are recommended for this species.
Fragrant fritillary	*Fritillaria liliacea*	USFSS, CNPS 1B.2	Coastal scrub, valley and foothill grassland, coastal prairie. Usually on clay soils, often on serpentine in grassland.3-410 m. Flowers February- April.	A	No suitable habitat. No further actions are recommended for this species.
Blue coast gilia	*Gilia capitata* ssp. *chamissonis*	CNPS 1B.1	Coastal dunes, coastal scrub. Elevation range: 2-180 m. Flowers April-July.	A	The BSA lacks suitable coastal dune and scrub habitat. No further actions are recommended for this species.

Common Name	Scientific Name	Status	General Habitat Description	Habitat Present/ Absent	Rationale
Woolly-headed gilia	*Gilia capitata* ssp. *tomentosa*	CNPS 1B.1	Rocky serpentine outcrops in coastal bluff scrub and valley and foothill grassland. 10-220 m. Flowers May-July.	A	All known occurrences of this species in the vicinity of the BSA are associated with serpentine soils in coastal bluff scrub and valley and foothill grassland. The BSA lacks suitable serpentine soils in coastal bluff scrub and valley and foothill grassland habitat. No further actions are recommended for this species.
Dark-eyed gilia	*Gilia millefoliata*	CNPS 1B.2, BLMS	Coastal dunes. 2-30 m. Flowers April-July.	A	All known occurrences of this species in the vicinity of the BSA are associated with coastal dunes. The BSA lacks suitable coastal dune habitat. No further actions are recommended for this species.
Diablo helianthella	*Helianthella castanea*	CNPS 1B.2, BLMS	Broadleaved upland forest, chaparral, coastal scrub, cismontane woodland, riparian woodland, valley and foothill grassland. 25-1150 m. Flowers April to June.	A	This species requires more sun than is found in the BSA. No *Helianthella* were observed during the field surveys, which were conducted during the flowering period. No further actions are recommended for this species.
Congested headed hayfield tarplant	*Hemizonia congesta* ssp. *congesta (Hemizonia congesta* ssp. *leucocephala)*	CNPS 1B.2	Coastal scrub, valley and foothill grassland; located in grassy valleys, hills, and fallow fields. 20-550 m. Flowers April-November.	A	All known occurrences of this species in the vicinity of the BSA are associated with coastal scrub and valley and foothill grassland. Surveys were conducted during the flowering period. The BSA lacks suitable habitat. No further actions are recommended for this species.
Marin western flax	*Hesperolinon congestum*	FT, ST, CNPS 1B.1	Serpentinite soil, chaparral, valley and foothill grassland. Known only from Marin, San Francisco, and San Mateo counties. In serpentine barrens and in serpentine grassland chaparral. 5-370 m. Flowers April-July.	A	No suitable habitat. No further actions are recommended for this species.

Common Name	Scientific Name	Status	General Habitat Description	Habitat Present/ Absent	Rationale
Water star-grass	*Heteranthera dubia*	CNPS 2B.2	Requires a pH of 7 or higher, usually in slightly eutrophic waters. Marshes and swamps (alkaline, still or slow-moving water). 30-1495 m. Flowers July-October.	A	No suitable habitat. No further actions are recommended for this species.
Santa Cruz tarplant	*Holocarpha macradenia*	FT, CE, CNPS 1B.1	Coastal prairie, coastal scrub, Valley and foothill grassland, often clay. 10-20 m. Flowers June-October.	A	No suitable habitat. No further actions are recommended for this species.
Kellogg's horkelia	*Horkelia cuneata* var. *sericea*	CNPS 1B.2, BLMS	Closed-cone coniferous forest, chaparral (maritime), coastal dunes, coastal scrub, openings, sandy/gravelly. 10-200 m. Flowers April-Sept.	A	No suitable habitat. No further actions are recommended for this species.
Thin-lobed horkelia	*Horkelia tenuiloba*	CNPS 1B.2, BLMS	Broadleaf upland forest, chaparral, valley and foothill grassland/mesic openings, sandy. 50-500 m. Flowers April-July.	A	Mesic soils within the BSA are in the lower part of the creek bank, however the site gets very limited sunlight. No *Horkelia* were observed during the field surveys, which were conducted during the flowering period. No further actions are recommended for this species.
Small groundcone	*Kopsiopsis hookeri*	CNPS 2.3	North coast coniferous forest, generally on salal (*Gaultheria shallon*) and *Vaccinium*. 90-885 m. Flowers April-August.	A	The BSA lacks suitable habitat for this species. No host plant, salal present. No further actions are recommended for this species.
Contra costa goldfields	*Lasthenia conjugens*	FE, CNPS 1B.2	Cismontane woodland, playas (alkaline), valley and foothill grassland, vernal pools. 0-470 m. Flowers March-April.	A	The BSA does not provide suitable habitat. This species was not observed during the surveys, which were conducted during the flowering period. No further actions are recommended for this species.
Beach layia	*Layia carnosa*	FE, SE, CNPS 1B.1	Sandy soil, coastal dunes, coastal scrub. 0-60 m. Flowers March-July.	A	The BSA lacks suitable habitat. No further actions are recommended for this species.

Common Name	Scientific Name	Status	General Habitat Description	Habitat Present/ Absent	Rationale
Rose leptosiphon	*Leptosiphon rosaceus*	CNPS 1B.1	Coastal bluff scrub. 0-100 m. Flowers April-July.	A	All known occurrences of this species in the vicinity of the BSA are associated with coastal bluff scrub. The BSA lacks suitable habitat. No further actions are recommended for this species.
San Francisco lessingia	*Lessingia germanorum*	FE, SE, CNPS 1B.1	Coastal scrub (remnant dunes) 25-110 m. Flowers June-November.	A	The BSA lacks suitable habitat. No further actions are recommended for this species.
Tamalpais lessingia	*Lessingia micradenia var. micradenia*	CNPS 1B.2	Chaparral, valley and foothill grassland; usually located on serpentine substrate, often roadsides. 10-500 m. Flowers June-October.	A	The BSA lacks serpentine and suitable habitat. No further actions are recommended for this species.
Pitkin Marsh lily	*Lilium pardalinum* ssp. *pitkinense*	FE, SE, CNPS 1B.1	Cismontane woodland, meadows and seeps, marshes and swamps (freshwater), mesic and sandy. 35-65 m. Flowers June-July.	A	Known only from areas near Sebastopol. The mesic area in the BSA does not provide appropriate habitat. No further actions are recommended for this species.
Sebastopol meadowfoam	*Limnanthes vinculans*	FE, SE, CNPS 1B.1	Meadows and seeps, valley and foothill grassland, vernal pools, vernally mesic. 15-305 m. Flowers April-May.	A	The BSA lacks suitable grassland and vernal pool habitat. No further actions are recommended for this species.
Tidestrom's lupine	*Lupinus tidestromii*	FE, SE, CNPS 1B.1	Coastal dunes. 0-100 m. Flowers April-June.	A	All known occurrences of this species in the vicinity of the BSA are associated with coastal dunes. The BSA lacks suitable coastal dune habitat. No further actions are recommended for this species.
Marsh microseris	*Microseris paludosa*	CNPS 1B.2	Moist places, closed-cone coniferous forest, cismontane woodland, coastal scrub, valley and foothill grassland, (Moist grassland or open woodland). 5-300 m. Flowers April-June.	A	This species is typically found in areas that receive more sunlight than the BSA. It was not observed during the field surveys, which were conducted during the flowering period. No further actions are recommended for this species.

Common Name	Scientific Name	Status	General Habitat Description	Habitat Present/ Absent	Rationale
Elongate copper moss	*Mielichhoferia elongata*	CNPS 2B.2	Cismontane woodland/ metamorphic, rock typically with high levels of heavy metals, usually vernally mesic. 500-1300 m.	A	This species is often found along road cuts in the foothills. It was not observed during the field surveys. No further actions are recommended for this species.
Marin County navarretia	*Navarretia rosulata*	CNPS 1B.2	Rocky serpentinite soil, closed-cone coniferous forest, chaparral. 200-635 m. Flowers May-July.	A	All known occurrences of this species in the vicinity of the BSA are associated with serpentinite soil. The BSA lacks suitable habitat. No further actions are recommended for this species.
White-rayed pentachaeta	*Pentachaeta bellidiflora*	FE, SE, CNPS 1B.1	Valley and foothill grassland, coastal scrub, coastal prairie, open dry rocky areas, often serpentine. 35-620 m. Flowers March-May.	A	The BSA lacks suitable open dry rocky habit. This species was not observed during the field surveys, which were conducted during the flowering period. No further actions are recommended for this species.
Choris' popcorn-flower	*Plagiobothrys chorisianus* var. *chorisianus*	CNPS 1B.1	Moist places, coastal prairie, coastal scrub, chaparral, seasonal marsh. Known only from San Francisco southward. 60-485 m. Flowers March-June	A	The BSA lacks suitable habit. This species was not observed during the field surveys, which were conducted during the flowering period. No further actions are recommended for this species.
San Francisco popcorn-flower	*Plagiobothrys diffusus*	SE, CNPS 1B	Seasonally moist places, coastal prairie, valley and foothill grassland. Known only from San Francisco southward. 0-100 m. Flowers April-June.	A	The BSA lacks suitable habit. This species was not observed during the field surveys, which were conducted during the flowering period. No further actions are recommended for this species.
Hairless popcorn-flower	*Plagiobothrys glaber*	CNPS 1A	Alkaline meadows and seeps, coastal salt marshes.0-100 m. Flowers March-May	A	Historically occurred on grassy slopes with marine influence. The BSA lacks suitable habit. This species was not observed during the field surveys. No further actions are recommended for this species.

Common Name	Scientific Name	Status	General Habitat Description	Habitat Present/ Absent	Rationale
North coast semaphore grass	*Pleuropogon hooverianus*	BLMS, ST, CNPS 1B.1	Moist, open to shaded areas, broadleafed upland forest, meadows and seeps, north coast coniferous forest. Marshy areas.10-1,150 m. Flowers May-August.	A	The BSA lacks suitable habit. The creekbed is not vegetated and the banks are too dry. This species was not observed during the field surveys, which were conducted during the flowering period. No further actions are recommended for this species.
Oregon polemonium	*Polemonium carneum*	CNPS 2B.2	Coastal prairie, coastal scrub, lower montane coniferous forest. 0-1,830m. Flowers April-September.	A	The BSA lacks suitable habitat. This species was not observed during the field surveys, which were conducted during the flowering period. No further actions are recommended for this species.
Hickman's potentilla	*Potentilla hickmanii*	FE, SE, CNPS 1B.1	Coastal bluff scrub, closed-cone coniferous forest, meadows and seeps (vernally mesic), marshes and swamps (freshwater). 10-149 m. Flowers April-August.	A	The closest known occurrence is south of San Francisco. The BSA lacks suitable habitat. No further actions are recommended for this species.
Tamalpais oak	*Quercus parvula* var. *tamalpaisensis*	CNPS 1B.3	Lower montane coniferous forest. 100-750 m. Flowers March-April.	A	Suitable habitat for this species is not present in the BSA. This species is a woody shrub, which if present, would have been observed during the field surveys. No further actions are recommended for this species.
Adobe sanicle	*Sanicula maritima*	USFSS, SE, CNPS 1B.1	Chaparral, coastal prairie, meadows and seeps, valley and foothill grassland, often clay and serpentine. 30-240 m. Flowers February-May.	A	Suitable clay and serpentine habitat for this species is not present in the BSA. The closest known occurrence is a population believed to be extinct, south of San Francisco. No further actions are recommended for this species.
Point Reyes checkerbloom	*Sidalcea calycosa* ssp. *rhizomata*	CNPS 1B.2	Freshwater marshes and swamps near the coast. 3-75 m. Flowers April-September.	A	All known occurrences of this species in the vicinity of the BSA are associated with marsh habitat. The BSA lacks suitable marsh habitat. No further actions are recommended for this species.

Common Name	Scientific Name	Status	General Habitat Description	Habitat Present/ Absent	Rationale
Marin checkerbloom	*Sidalcea hickmanii* ssp. *viridis*	CNPS 1B.3	Chaparral; located on serpentine or volcanic substrate; often observed following burns. 50-425 m. Flowers May-June.	A	All known occurrences of this species in the vicinity of the BSA are associated with serpentine or volcanic substrates. The BSA lacks suitable serpentine or volcanic substrate habitat. No further actions are recommended for this species.
San Francisco campion	*Silene verecunda* ssp*. verecunda*	CNPS 1B.2	Coastal bluff scrub, chaparral, coastal prairie, coastal scrub, valley and foothill grassland, often mudstone, one on serpentine. 30-645 m. Flowers March-August.	A	All known occurrences of this species in the vicinity of the BSA are associated with mudstone or serpentine in coastal scrub or bluff scrub, chaparral, coastal prairie or valley and foothill grassland. The BSA lacks suitable habitat. No further actions are recommended for this species.
Santa Cruz microseris	*Stebbinsoseris decipiens*	CNPS 1B.2	Open areas in broadleafed upland forest, closed-cone coniferous forest, chaparral, coastal prairie, coastal scrub, valley and foothill grassland. 30-645 m. Flowers April-May.	A	Suitable habitat for this species is not present in the BSA, however, this species was not observed during the field surveys, which were conducted during the flowering period. No further actions are recommended for this species.
Tamalpais jewel-flower	*Streptanthus batrachopus*	CNPS 1B.3	Serpentinite soil, chaparral, closed-cone coniferous forest. 305-650 m. Flowers April-June.	A	All known occurrences of this species in the vicinity of the BSA are associated with serpentine outcrops or openings. The BSA lacks suitable habitat. No further actions are recommended for this species.
Mt. Tamalpais bristly jewel-flower	*Streptanthus glandulosus* ssp*. pulchellus*	CNPS 1B.2	Serpentinite soil/talus, chaparral, valley and foothill grassland. 150-800 m. Flowers May-July.	A	All known occurrences of this species in the vicinity of the BSA are associated with serpentine outcrops or openings. The BSA lacks suitable habitat. No further actions are recommended for this species.
Tiburon jewel-flower	*Streptanthus glandulosus* ssp. *niger (previously Streptanthus niger)*	FE, SE, CNPS 1B.1	Serpentinite soil, valley and foothill grassland. 30-150 m. Flowers May-June.	A	All known occurrences of this species in the vicinity of the BSA are associated with willow rocky serpentine soil. The BSA lacks suitable habitat. No further actions are recommended for this species.

Common Name	Scientific Name	Status	General Habitat Description	Habitat Present/ Absent	Rationale
Suisun Marsh aster	*Symphyotrichum lentum*	CNPS 1B.2	Brackish and freshwater marshes and swamps.0-3 m. Flowers May-November.	A	All known occurrences of this species in the vicinity of the BSA are found along seasonally wet sloughs and marshes. The BSA has dynamic flows and lacks suitable habitat. No further actions are recommended for this species.
Two fork clover	*Trifolium amoenum*	FE, CNPS 1B.1	Coastal bluff scrub, valley and foothill grassland (sometimes serpentinite), open sunny sites.5-415 m. Flowers April-June.	A	All known occurrences of this species in the vicinity of the BSA are found in open sunny sites in chaparral and grassland. The BSA does not have suitable habitat. This species was not observed during the field surveys, which were conducted during the flowering period. No further actions are recommended for this species.
Saline clover	*Trifolium hydrophilum (*syn. *Trifolium depauperatum var. hydrophilum)*	CNPS 1B.2	Marshes and swamps, valley and foothill grassland (mesic, alkaline), vernal pools. 0-300 m. Flowers April-June.	A	All known occurrences of this species in the vicinity of the BSA are associated with alkaline or saline wetlands. The BSA lacks suitable habitat. No further actions are recommended for this species.
San Francisco owl's-clover	*Triphysaria floribunda*	CNPS 1B.2	Coastal prairie, coastal scrub, valley and foothill grassland, generally serpentinite soil.10-160 m. Flowers April-June.	A	The BSA does not provide suitable habitat. This species was not observed during the field surveys, which were conducted during the flowering period. No further actions are recommended for this species.
Coastal triquetrella	*Triquetrella californica*	CNPS 1B.2	Coastal prairie, coastal scrub. Grows within 30 meters of the coast on gravelly rocky soil. 30-150 m. Flowers May-June.	A	Known in CA from fewer than ten small coastal occurrences The BSA does not provide suitable habitat. No further actions are recommended for this species

Common Name	Scientific Name	Status	General Habitat Description	Habitat Present/ Absent	Rationale

* Key to status codes:

FE	Federal Endangered
FT	Federal Threatened
FD	Federal Delisted
FC	Federal Candidate
BCC	USFWS Birds of Conservation Concern
MMPA	Species protected under the Marine Mammal Protection Act
SC	State Candidate
SE	State Endangered
ST	State Threatened
SR	State Rare
SSC	CDFW Species of Special Concern
CFP	CDFW Fully Protected Animal
WBWG	Western Bat Working Group (High or Medium) Priority species
BLMS	Bureau of Land Management Sensitive Species
USFSS	U.S. Forest Service Sensitive Species
CNPS 1A	CNPS Rare Plant Rank 1A: Plants presumed extirpated in California and either rare or extinct elsewhere
CNPS 1B	CNPS Rare Plant Rank 1B: Plants rare, threatened, or endangered in California and elsewhere
CNPS 2A	CNPS Rare Plant Rank 2A: Plants presumed extirpated in California, but more common elsewhere
CNPS 2B	CNPS Rare Plant Rank 2B: Plants rare, threatened, or endangered in California, but more common elsewhere
CNPS 3	CNPS are Plant Rank 3: Plants about which more information is needed – a review list
CNPS 4	CNPS Rare Plant Rank 4: Plants of limited distribution – a watch list

CNPS Rare Plant Threat Ranks

0.1-Seriously threatened in California (over 80% of occurrences threatened / high degree and immediacy of threat)
0.2-Moderately threatened in California (20-80% occurrences threatened / moderate degree and immediacy of threat)
0.3-Not very threatened in California (<20% of occurrences threatened / low degree and immediacy of threat or no current threats known)

*Presence:
Absent [A] - no habitat present and no further work needed.
Habitat Present [HP] -habitat is, or may be present. The species may be present.
Present [P] - the species is present.
Critical Habitat [CH] - proposed project footprint is located within a designated critical habitat unit, but does not necessarily mean that appropriate habitat is *present.*

This page intentionally left blank

Chapter 4 – Results: Biological Resources, Discussion of Impacts and Mitigation

Habitats and Natural Communities of Special Concern

Habitats are considered to be of special concern based on (1) federal, state, or local laws regulating their development; (2) limited distributions; and/or (3) the habitat requirements of special-status plants or animals occurring on site. Two natural communities of special concern were found to be present in the BSA: Riparian Woodland and Perennial Stream (CWA "Other Waters").

The impact areas are summarized in Table 2 and 3 and shown Figure 3b. Permanent impacts are a conversion of a natural community to structures such as, bridge support or to an area of engineered slope stabilization. Temporary impacts are disturbances to existing natural communities that would be restored to the same natural community type following construction (such as dewatering). No impacts to the stream or its banks are expected. All work will be conducted on the bridge surface and restricted to the Ruderal Disturbed/Developed community.

Table 2: Proposed Project Direct Impacts to Natural Communities of Special Concern.

Natural Community of Special Concern	Permanent Impacts	Temporary Impacts
Riparian Woodland	0 acre (0 ft.^{2})	0 acre (0 ft.^{2})
Perennial Stream ("Other Waters")	0 acre (0 linear ft.)	0 acre (0 linear ft.)

Table 3: Proposed Project Direct Impacts to Jurisdictional Areas by Agency.

Agencies Jurisdiction	Permanent Impacts	Temporary Impacts
CDFW (Riparian woodland and creek bed)	0 acre (0 ft.^{2})	0 acre (0 ft.^{2})
USACE, RWQCB, NMFS (creek bed)	0 acre (0 ft.^{2})	0 acre (0 ft.^{2})

Figure 3b shows the areas of the proposed project's impacts. The following sections present a discussion of the impacts and mitigation for each natural community of special concern. Permanent impacts are a conversion of a natural community to structures such as, bridge support or to an area of engineered slope stabilization. Temporary impacts are disturbances to existing natural communities that would be restored to the same natural community type following construction (such as dewatering).

This page intentionally left blank

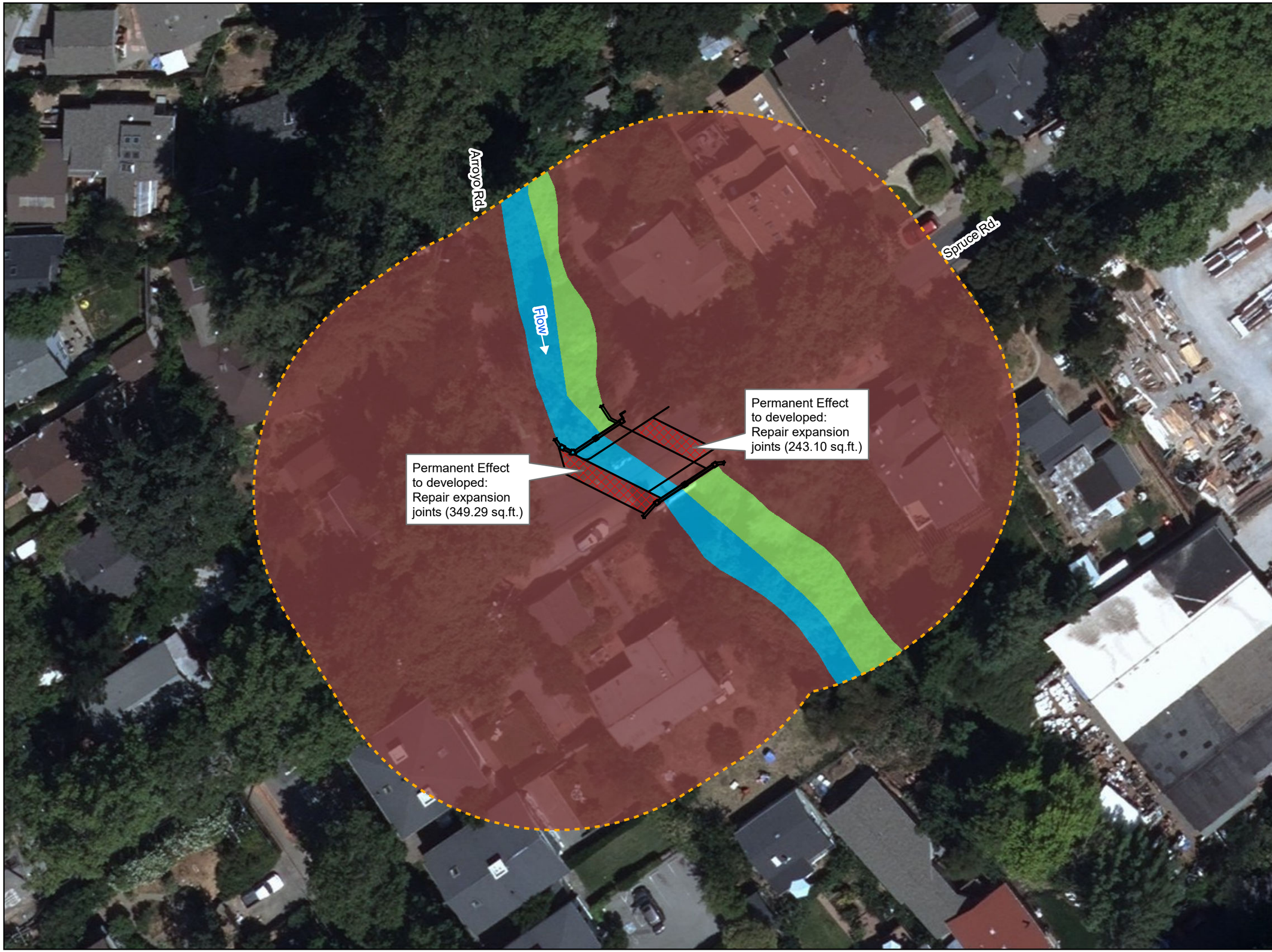

wra
ENVIRONMENTAL CONSULTANTS

Bridge Preventative Maintenance Program

Spruce Road Bridge NES

Marin County, California

Figure 3b.

Biological Communities Impacted within the Biological Study Area

Permanent Impact Area
Biological Study Area - 1.49 acres
Perennial Stream (0 acre within the BSA)
Riparian Woodland (0 acres within the BSA)
Ruderal disturbed/Developed (0.01 acre within the BSA)

N
W E
S

0 10 20 40
Feet

Map Date: April 26, 2017
Map By: smortensen
Base Source: Esri Streaming - World Imagery

Path: L:\Acad 2000 Files\22000\22304\GIS\ArcMap\BPMP\Spruce Road Bridge\2017\Fig3b_Spruce_Effects_20170427.mxd

This page intentionally left blank

RIPARIAN REDWOOD FOREST

Riparian Woodland Survey Results

The Riparian Woodland is loosely similar to California Bay Forest Alliance (*Umbellaria californica* Alliance) (G4, S3), Sawyer, J., T. Keeler-Wolf and J. Evens. 2009). The S3 ranking indicates a natural community of special concern (sensitive) within California, though it may be more common elsewhere. The overstory consists of native tree species (California bay, white alder, and sycamore) as well as non-natives (black acacia, cherry plum, and firethorn). The term 'riparian' is used here as a descriptor to indicate the slightly more mesic conditions within the stream's general influence. Approximately 0.07 acres of Riparian Woodland is present in the BSA (Figure 3a).

Riparian Redwood Forest Avoidance and Minimization Efforts

The following avoidance and minimization measures will be employed to avoid or minimize impacts to the greatest extent possible:

- Work would be conducted from the top of the bridge to avoid impacts.
- Appropriate BMPs would be used during construction.
- Orange construction fencing would be installed along the limits of work to prevent encroachment into undisturbed habitats.

Riparian Redwood Forest Project Impacts

As summarized in Table 2 above, there will be no impacts to this community. This community will be avoided and no permanent, temporary, or indirect impacts are anticipated.

Riparian Redwood Forest Compensatory Mitigation

No impacts are anticipated. Hence, compensatory mitigation is not required.

Riparian Redwood Forest Cumulative Impacts

No future public or private activities are known to be planned or reasonably foreseen for the BSA vicinity. Therefore, cumulative effects are not anticipated for this proposed project.

PERENNIAL STREAM ("OTHER WATERS")

Perennial Stream ("Other Waters") Survey Results

The Perennial Stream Biological Community consists of the Fairfax Creek streambed, which is approximately 0.07 acres (270 linear feet) of "other waters" within the BSA. There are no wetlands in the BSA. The creek is supported by a local watershed, generally, the northwestern part of the Town of Fairfax and adjacent open space lands. The creek substrate is a mix of small gravel to larger cobble and rock. Indicators of the OHW mark include the slope change at the bed and earthen bank junction and wrack at the edge of the creek bed. The channel width at the OHW mark was used to determine the stream ("other waters") boundary shown on Figure 3a. The banks under the bridge are concrete. Just upstream of the bridge on the northwest side is a concrete retaining wall along the base of the bank. The other banks are earthen. The creek

is not included on the National System of Wild and Scenic Rivers published by the U.S. Department of the Interior.

Pursuant to the Clean Water Act Section 404 and 401 the creek below OHW would be within the USACE and RWCQB jurisdiction. It would also be protected by Porter Cologne (RWQCB). There are no areas in the BSA that would be considered only Waters of the State. The bed and banks would be within CDFW's jurisdiction.

Perennial Stream Avoidance and Minimization Efforts

The following measures are included to avoid impacts to creek habitat resulting from the use of mechanical equipment in the creek bed.

- All work will be conducted from the top of the bridge. The work under the bridge will be done using a "snooper" truck lift parked on the deck, eliminating the need for scaffolding or working in the creek.
- All workers will ensure that food scraps, paper wrappers, food containers, cans, bottles, and other trash from the BSA are deposited in covered or closed trash containers. The trash containers will not be left open and unattended overnight.

With the implementation of these measures, it is expected that the proposed project will not result in adverse impacts to creek habitat.

Perennial Stream Project Impacts

As summarized in Table 2 above, there will be no impacts to this community. This community will be avoided and no permanent, temporary, or indirect impacts are anticipated.

Perennial Stream Compensatory Mitigation

No impacts are anticipated. Hence, compensatory mitigation is not required.

Perennial Stream Cumulative Impacts

No future public or private activities are known to be planned or reasonably foreseen for the BSA vicinity. Therefore, cumulative effects are not anticipated for this proposed project.

Special-Status Plant Species

Based upon a review of the resources and databases discussed in Section 2, 77 special-status plant species have been documented in the vicinity of the BSA. No critical habitat for special-status plants exists within the proposed project area. Table 1 discusses the potential for each of the special-status plant species to occur in the BSA, and Figure 4 shows special-status plant species documented within 5 kilometers of the BSA (CDFW 2017a). Suitable habitat is present in the BSA for two of the species. Key points regarding those species are summarized here.

- Sonoma alopecurus (*Alopecurus aequalis* var*. sonomensis,* FE, CNPS 1B.1). All known occurrences of this species in the vicinity of the BSA are associated with coastal freshwater marsh and swamp, and riparian scrub. The BSA limited, poor quality, habitat for this species. No *Alopecurus* species were observed. No further actions are recommended for this species.
- Minute pocket moss (*Fissidens pauperculus,* USFSS, CNPS 1B.2). Though not coniferous forest, mesic substrates within the BSA have limited the potential to support

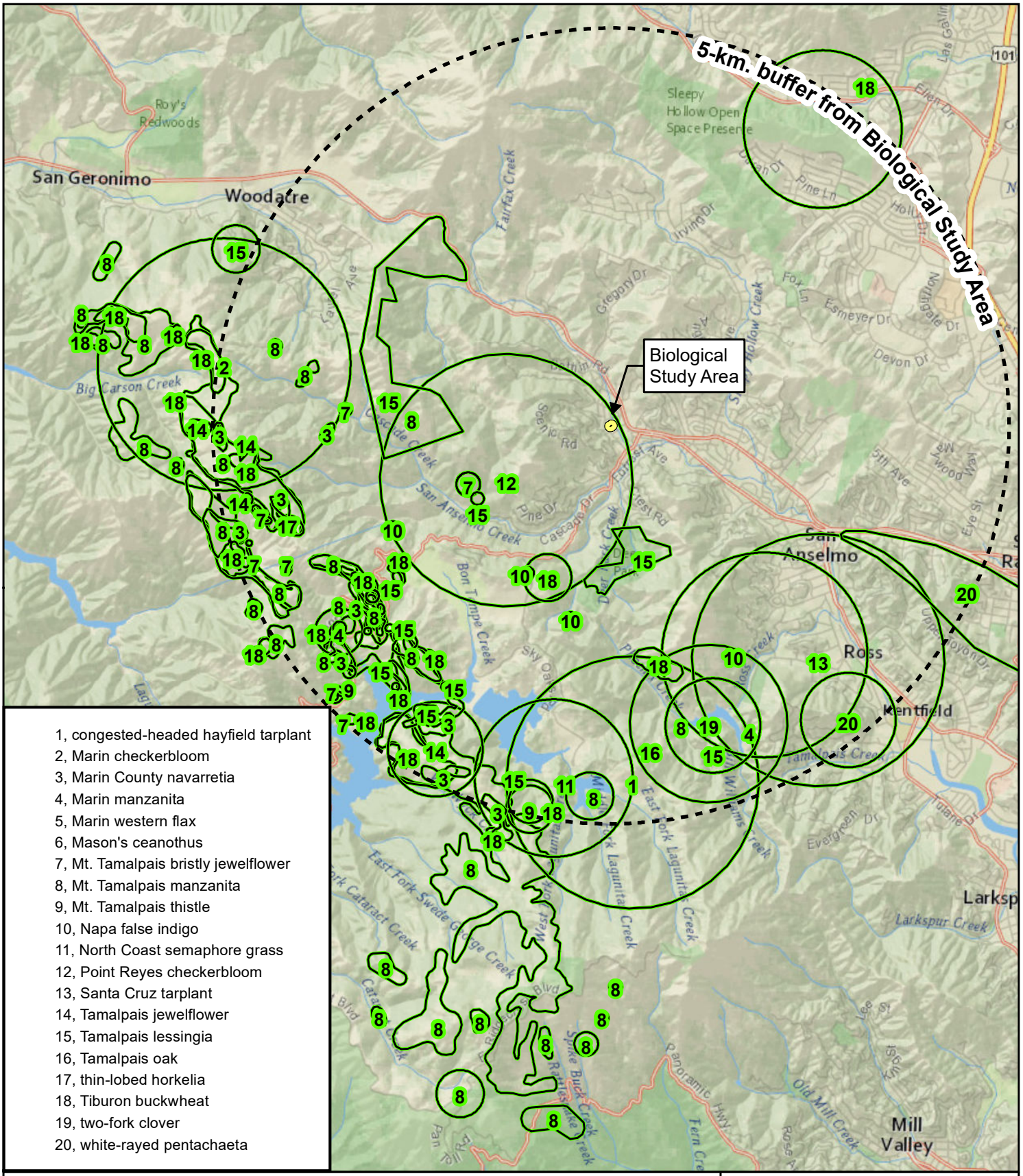

Figure 4. Special-status Plant Species Occurrences within 5 Kilometers of the Biological Study Area

Bridge Preventative Maintenance Program
Spruce Road Bridge NES
Marin County, California

0 0.5 1 2
Miles

ENVIRONMENTAL CONSULTANTS

Map Prepared Date: 4/26/2017
Map Prepared By: smortensen
Base Source: Esri Basemap - National Gegraphic
Data Source(s): WRA, CNDDB

Path: L:\Acad 2000 Files\22000\22304\GIS\ArcMap\BPMP\Spruce Road Bridge\2017\Fig4_Spruce_CNDDB_Plants_20170426.mxd

This page intentionally left blank

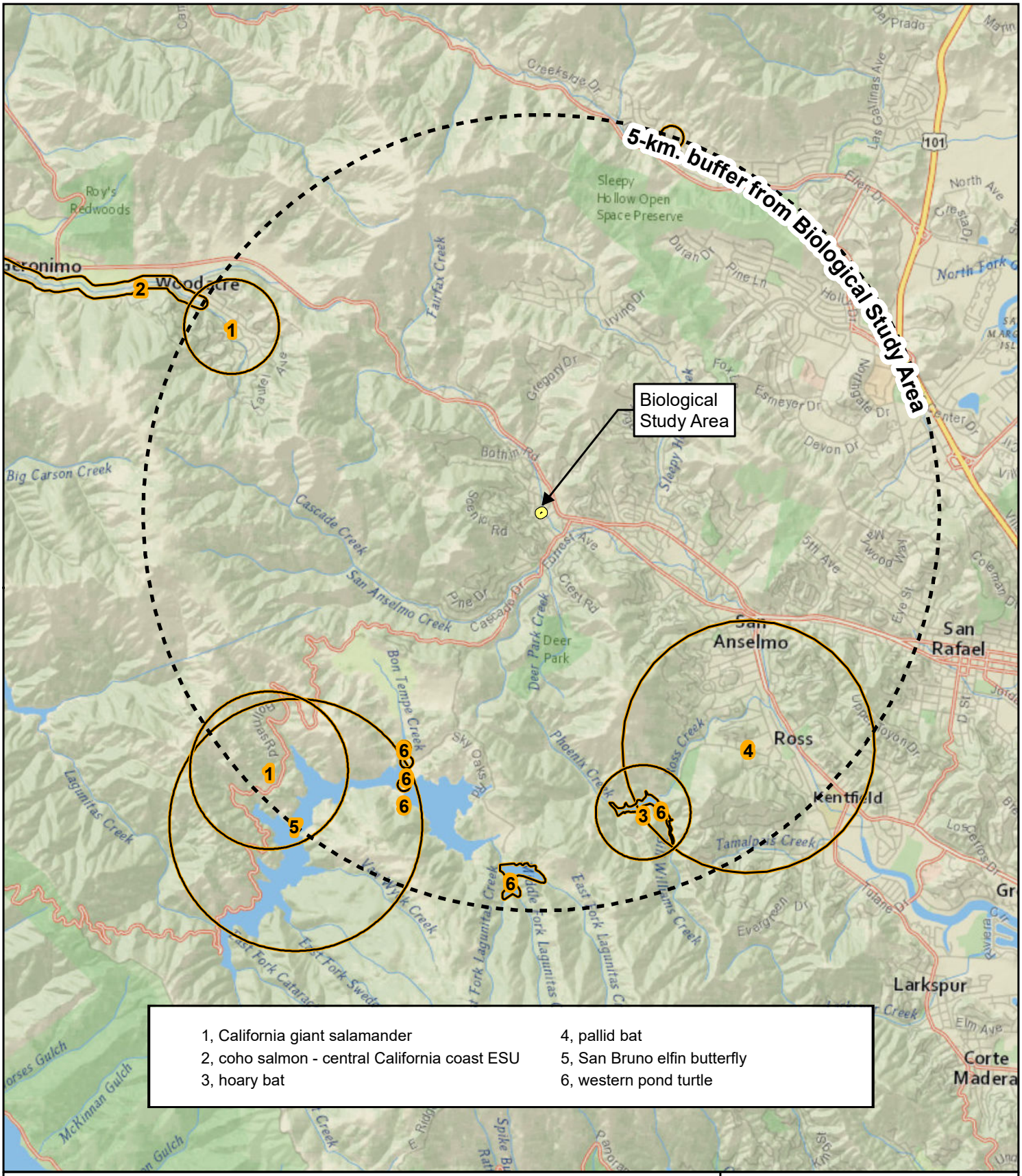

Figure 5. Special-status Wildlife Species Occurrences within 5 Kilometers of the Biological Study Area

Bridge Preventative Maintenance Program
Spruce Road Bridge NES
Marin County, California

0 0.5 1 2
Miles

ENVIRONMENTAL CONSULTANTS

Map Prepared Date: 4/26/2017
Map Prepared By: smortensen
Base Source: Esri Basemap - National Gegraphic
Data Source(s): WRA, CNDDB

Path: L:\Acad 2000 Files\22000\22304\GIS\ArcMap\BPMP\Spruce Road Bridge\2017\Fig4_Spruce_CNDDB_Wildlife_20170426.mxd

This page intentionally left blank

this species. Scour alters the duff in large storm events further limiting the likelihood of this moss occurring in the BSA. It was not observed during the field surveys, which occurred during the wet season when it would be identifiable. No further actions are recommended for this species.

The remaining special-status plant species documented in the vicinity are unlikely to occur in the BSA based on lack of suitable habitats (such as coastal dunes, coastal prairie, coastal salt marsh, or vernal pools) or specific substrates (i.e. serpentine, volcanic rock). The BSA is in a residential area, with structures (houses, sheds, etc.), fenced backyards, and landscape areas nearby.

No special-status plant species were observed in the BSA during floristic surveys completed during the appropriate flowering periods. No effects on special-status plant species are anticipated and no further discussion of special-status plant species is necessary.

Special-Status Wildlife Species

Ninety-two special-status wildlife species have been documented in the CNDDB and USFWS records as potentially occurring in the quadrangles or noted in a review of other resources as having overlapping ranges and habitat requirements (Table 1). Six of these special-status wildlife species have been documented in CNDDB within 5 kilometers (3 miles) of the BSA (Figure 5), and a total of three species have a moderate or high potential to occur based upon habitat conditions present in the BSA and documented ranges. No special-status wildlife species were observed within the BSA during the site visit. Those species with potential to occur include: Allen's hummingbird (*Selasphorus sasin*), oak titmouse (*Baeolophus inornatus*), and Nuttall's woodpecker (*Picoides nuttallii*). The BSA also has potential to support non-special-status nesting birds. These species and their potential for occurrence in the BSA are discussed in further detail below.

The remaining 89 species identified in Table 1 are unlikely to occur within the BSA because of existing conditions within and surrounding the BSA. Roadways, residential development, and various anthropogenic disturbances greatly reduce the amount of available breeding, rearing, and foraging habitat for most special-status species. Several habitat types or habitat conditions that are required to support special-status wildlife species are also absent from the BSA, such as marsh, open grassland, coniferous forests, marine, and serpentine habitats.

Northern spotted owls (*Strix occidentalis caurina*), a Federal threatened and State threatened species, are documented within 0.5 mile of the BSA. However, northern spotted owls require undisturbed forests for foraging and nesting. The preferred forest types including fir or other coniferous trees are not present within or adjacent to the BSA. Typical disturbance buffers for northern spotted owl are 0.25 mile. The nearest potential nesting habitat and nearest documented occurrences are both greater than 0.25 mile from the BSA; therefore, the proposed project is not anticipated to disturb northern spotted owl nesting in the region. The absence of fir and redwood forest within the BSA, distance to suitable habitat, and baseline levels of anthropogenic disturbance from surrounding residential development reduce the potential for northern spotted owl to be present near the BSA or for spotted owls to be disturbed by proposed project activities. In addition, no trees are to be removed by the proposed project. Therefore, the proposed project will have no effect on northern spotted owl.

Trees within the BSA are primarily California bay and do not provide cavities or complex foliage required to support tree roosting bats. The underside of the bridge structure is also solid with no gaps, openings, or seams which could potentially be used by roosting bats.

The BSA also receives a high level of human disturbance from the residences and traffic in the vicinity further reducing the potential for special-status bat species such as Townsend's big-eared bat (*Corynorhinus townsendii*) or western red bat (*Lasiurus blossevillii*) to occur within the BSA. Both of these species are highly sensitive to disturbance at roost sites. The absence of roost sites and other habitat features within the BSA makes the presence of special-status bats or other bat species unlikely. Therefore, the proposed project will have no effect on roosting bats.

Special-status amphibian and reptile species such as California giant salamander (*Dicamptodon ensatus*), foothill yellow-legged frog (*Rana boylii*), California red-legged frog (*Rana draytonii*), and western (Pacific) pond turtle (*Actinemys marmorata*) are also unlikely to occur. No occurrences of these species have been documented within the watershed, and California red-legged frog is not known within this portion of Marin County nor documented within 5 miles of the BSA. Nearby occurrences of foothill yellow-legged frog and western pond turtle are located outside the watershed and greater than 1.25 miles from the BSA. In addition, the BSA lacks suitable pool habitat and has too high flows during the breeding season to support foothill yellow-legged frog; therefore, the BSA does not contain suitable breeding habitat for this species. The BSA also lacks suitable basking and upland habitats for western pond turtle. The modified creek habitat including cement bed and banks precludes California giant salamander from breeding in the BSA and is unlikely to occur within this portion of Fairfax Creek. The lack of nearby occurrences, connectivity with occupied habitats, or suitable habitat within the BSA make it unlikely that special-status amphibian and reptile species will occur within the BSA; thus, the proposed project will have no effect on California giant salamander, foothill yellow-legged frog, California red-legged frog, or western pond turtle.

Fairfax Creek is a tributary of San Anselmo Creek which currently supports an annual run of steelhead. However, a total barrier exists at the downstream end of Fairfax Creek before the confluence with San Anselmo Creek. A concrete box culvert located at Bolinas Avenue terminates at a vertical drop of approximately 4 feet, and has an overall length of 458 feet with a slope of 0.94 percent (Ross Taylor and Associates 2006). An assessment of the culvert concluded that adult steelhead, and resident rainbow trout have a zero percent chance of passing the barrier because of the vertical drop height, length, and slope of the culvert (Ross Taylor and Associates 2006). In addition, historical records have documented an absence of steelhead in Fairfax Creek since about 1960 (CEMAR 2005). The proposed project will have no effect on steelhead.

Fairfax Creek is designated as EFH for Pacific Salmonids including Coho and Chinook salmon. Coho salmon are considered extirpated from San Francisco Bay and all of its tributaries, thus they will not be affected by the proposed project (NMFS 2012). Fairfax Creek is outside of the known range for Chinook salmon, thus they will not be affected by the proposed project (UC Davis 2017). Although these species have no potential to occur within the BSA, EFH is still present. The proposed project does not include in-water work or work within the bed and banks of Fairfax Creek. Therefore, the proposed project will have no effect on EFH.

SPECIAL-STATUS AND NON-SPECIAL-STATUS NESTING BIRDS

Three special-status species of birds including: Allen's hummingbird, oak titmouse and Nuttall's woodpecker, have potential to nest within the BSA. A brief discussion on these species is provided below. In addition to special-status bird species, non-special-status birds have the potential to nest within the BSA. Most native birds in the United States, including non-status species, are protected by the Migratory Bird Treaty Act of 1918. Under this legislation, destroying active nests, eggs, or young is illegal.

- **Allen's hummingbird (*Selasphorus sasin*, USFWS Bird of Conservation Concern).** Allen's hummingbird is found in a wide variety of habitats that provide nectar-producing flowers. The species is considered a common breeder throughout much of the San Francisco Bay area.

- **Oak titmouse (*Baeolophus inornatus*, USFWS Bird of Conservation Concern).** This relatively common species is year-round resident throughout much of California including most of the coastal slope, the Central Valley and the western Sierra Nevada foothills. Its primary habitat is woodland dominated by oaks. Local populations have adapted to woodlands of pines and/or junipers in some areas (Cicero 2000). The oak titmouse nests in tree cavities, usually natural cavities or those excavated by woodpeckers, though they may partially excavate their own (Cicero 2000). Seeds and arboreal invertebrates make up the birds' diet.

- **Nuttall's woodpecker (*Picoides nuttallii*, USFWS Bird of Conservation Concern).** Nuttall's woodpecker typically reside in lowland woodlands throughout California, west of the Sierra Nevada. This species is associated with intact oak and riparian woodlands, rarely in conifers, and is a primary cavity nester.

Nesting Birds Survey Results

Vegetation within and surrounding the BSA may provide potential nest sites or foraging habitat for Allen's hummingbird, oak titmouse, and Nuttall's woodpecker. In addition, the bridge structure and low lying brush may support non-special-status bird nesting. No special-status species were observed during the November 17, 2014 or March 16, 2016 site visits.

Nesting Birds Avoidance and Minimization

Although potential nesting habitat for breeding birds would not be lost as a result of the proposed project, construction activities could disturb active nests. The following measures will be implemented to avoid and minimize potential impacts to special-status and non-special-status nesting bird species:

- If proposed project activities begin between February 15 and August 15, pre-construction surveys will be conducted by a qualified biologist prior to ground disturbance to determine whether active nests containing eggs, chicks, or young are present in the BSA. Pre-construction surveys for active nests will be conducted no more than 14 days prior to ground disturbing activities.
- If active nests containing eggs, chicks, or young are not observed during pre-construction surveys, construction can proceed.
- If active nests containing eggs, chicks, or young are observed, ground-disturbing activities will be avoided within a 25- to 100-foot exclusion zone for passerine birds and a 200- to 500-foot exclusion zone for raptors and special-status species. Exclusion size will be dependent upon species and nest location. Appropriate exclusion distances will be determined by a qualified biologist based on the species present and location of the nest relative to construction activities (e.g., the nest is sufficiently shielded from construction to avoid disturbance). Construction within this buffer will be prohibited until the qualified biologist determines that the nest is no longer active. If an active nest is found after the completion of the pre-construction surveys or after construction begins, all construction activities will stop until a qualified biologist has evaluated the nest and determined an appropriate buffer to be placed around the nest. If avoidance of a buffer

zone is not feasible, CDFW will be contacted to coordinate an appropriate course of action.

- If proposed project activities begin during the non-nesting season (August 16 through February 14), no pre-construction nesting bird surveys will be required.

Nesting Birds Project Impacts

The BSA contains potential nesting habitat for special-status and non-special-status nesting birds. Although this habitat would not be lost as a result of the proposed project, construction activities could result in direct impacts to active nests, and construction noise could result in temporary indirect impacts to active nests. The BSA will be restored to pre-project conditions, and as such, no permanent direct impacts to nesting birds are expected.

The proposed project will not result in any changes to existing land use and that the BSA will be restored to pre-project conditions, no indirect effects are expected.

Nesting Birds Compensatory Mitigation

No permanent impacts are anticipated. Hence, compensatory mitigation is not required.

Nesting Birds Cumulative Impacts

No future public or private activities are known to be planned and or reasonably foreseen for the BSA. Therefore, cumulative effects on special-status and non-special-status nesting birds are not anticipated for the proposed project.

Chapter 5 – Conclusions and Regulatory Determinations

Federal Endangered Species Act Consultation Summary

There has been no federal Endangered Species Act Section 7 consultation to date with the USFWS and/or NMFS. The proposed project is anticipated to have no effect on northern spotted owl, a federally threatened species, or its habitat; therefore, no consultation is necessary with USFWS. Coho salmon are considered extirpated from San Francisco Bay (NMFS 2012, Brown and Moyle 1991) and CCC steelhead are considered to be absent in Fairfax Creek because of a total fish barrier, and no in-water work is anticipated as part of the proposed project. Therefore, the project will have no effect on Coho salmon or steelhead and consultation is not required.

Essential Fish Habitat Consultation Summary

Although no species covered under EFH are anticipated to occur, the BSA contains habitat identified as Pacific Salmon EFH. No loss of habitat function or value is anticipated from the proposed project, and no in-water work or work within the bed and banks of Fairfax Creek is anticipated as part of the proposed project. Therefore, the proposed project will have no effect on EFH and no consultation with NMFS is required.

California Endangered Species Act Consultation Summary

California state-listed species do not have potential to occur within the BSA including northern spotted owl. No take of state-listed or candidate species is anticipated to occur during the proposed project; therefore, consultation in relation to the California Endangered Species Act is not necessary for the proposed project.

Wetlands and Other Waters Coordination Summary

As summarized in Table 2 above, no temporary or permanent impacts to potentially jurisdictional “other waters” (creek bed) are proposed. There will be no need for a Streambed Alteration Agreement (CDFW), CWA 401 certification (RWQCB), and/or a CWA 404 Nationwide Permit

Invasive Species

With implementation of the avoidance and minimization efforts in Section 3, the proposed project would not result in severe infestations of invasive plant species or spread of the New Zealand mud snail.

Other

Migratory Bird Treaty Act and California Fish and Game Code. Although potential nesting habitat for nesting birds would not be lost as a result of the project, construction could result in temporary impacts if active nests are disturbed. Measures including preconstruction surveys and establishment of buffers if active nests are found will ensure that the project will not affect nesting birds.

Chapter 6 – References

Baldwin, B.G., D.H. Goldman, D.J Keil, R. Patterson, T.J. Rosatti, and D.H. Wilken (Eds.). 2012. The Jepson Manual: Vascular Plants of California, second edition. University of California Press, Berkeley, CA.

Brown, L. R., and P. B. Moyle. 1991. Status of Coho Salmon in California. Report to National Marine Fisheries. UC Davis, Department of Wildlife and Fisheries Biology: 131 p.

CDFW. 1994. A Field Guide to Lake and Streambed Alteration Agreements, Sections 1600-1607, California Fish and Game Code. Environmental Services Division, Sacramento, CA.

CDFW. 2009. List of California Vegetation Alliances. Biogeographic Data Branch. Vegetation Classification and Mapping Program, Sacramento, CA.

CDFW. 2003. List of California Terrestrial Natural Communities Recognized by the California Natural Diversity Database Wildlife and Habitat Data Analysis Branch. Vegetation Classification and Mapping Program, Sacramento, CA.

CDFW. 2017a. California Natural Diversity Database (CNDDB). Wildlife and Habitat Data Analysis Branch, Sacramento, CA.

CDFW 2017b. Spotted Owl Database, Wildlife and Habitat Data Analysis Branch. Sacramento. Accessed: June.

CDFW 2017c. California Wildlife Habitat Relationships System online database. Online at: http://www.dfg.ca.gov/biogeodata/cwhr/; accessed March.

CDFW 2017d. California Passage Assessment Database. Online at: https://nrm.dfg.ca.gov/PAD/; accessed March.

California Invasive Plant Council (Cal-IPC). 2017. California Invasive Plant Inventory Database. California Invasive Plant Council, Berkeley, CA. Online at: http://www.cal-ipc.org/ip/inventory/index.php ; most recently accessed: April.

California Invasive Species Council. 2017. http://www.iscc.ca.gov/ most recently accessed: April.

California Native Plant Society (CNPS). 2017. Inventory of Rare and Endangered Plants of California. CNPS, Sacramento, California. Online at: http://www.rareplants.cnps.org ; most recently accessed: April.

Center for Ecosystem Management and Restoration (CEMAR). 2012. Estuary Improvement Program. San Anselmo Creek, Center Boulevard Fish Passage Design.

Cicero, C. 2000. Oak Titmouse (*Baeolophus inornatus*), The Birds of North America Online (A. Poole, Ed.). Ithaca: Cornell Lab of Ornithology; Retrieved from the Birds of North America Online: http://bna.birds.cornell.edu/bna/species/485a

eBird. 2017. Audubon and Cornell Lab of Ornithology. Online at: http://ebird.org/ebird/map/ ; accessed February.

Environmental Laboratory. 1987. Corps of Engineers Wetlands Delineation Manual. Department of the Army, Waterways Experiment Station, Vicksburg, Mississippi 39180-0631.

Federal Register. November 13, 1986. Department of Defense, Corps of Engineers, Department of the Army, 33 CFR Parts 320 through 330, Regulatory Programs of the Corps of Engineers; Final Rule. Vol. 51, No. 219; page 41217.

Friends of Corte Madera Creek Watershed (FOCMCW). 2016. Fish Habitat Restoration Projects. http://www.friendsofcortemaderacreek.org ; accessed April.

Google Earth. 2017. Aerial Imagery. Accessed March.

Lobianco, R. M., and D. Fong. 2003. 2002 California freshwater shrimp (Syncaris pacifica) surveys within Point Reyes National Seashore and Golden Gate National Recreation Area. Prepared for U.S. National Park Service and U.S. Fish and Wildlife Service. Division of Natural Resource Management and Science, Golden Gate National Recreation Area, San Francisco, California, USA.

Moyle, P.B. 2002. Inland Fishes of California Revised and Expanded. University of California Press, Berkeley.

National Marine Fisheries Service. (NMFS). 2012. Final Recovery Plan for Central California Coast Coho Salmon Evolutionarily Significant Unit. National Marine Fisheries Service, Southwest Region, Santa Rosa, California.

National Marine Fisheries Service. (NMFS). 2007. Essential Fish Habitat. Online at: http://www.habitat.noaa.gov/protection/efh/index.html; accessed April.

National Marine Fisheries Service (NMFS). 2016. Intersection of USGS Topographic Quadrangles with NOAA Fisheries ESA Listed Species, Critical Habitat, Essential Fish Habitat, and MMPA Species Data. California Species List, West Coast Region. Online: http://www.westcoast.fisheries.noaa.gov/maps_data/california_species_list_tools.html; accessed April 2017.

Ross Taylor and Associates. 2006. Catalog of Stream Crossings with Culverts, and other Manmade Impediments to Fish Passage Located on Anadromous Stream Reaches Within San Anselmo Creek, Corte Madera Creek Watershed Marin County California. Prepared for Friends of Corte Madera Creek Watershed.

Sawyer, J., T. Keeler-Wolf and J. Evens. 2009. A Manual of California Vegetation, Second Edition. California Native Plant Society, Berkeley, CA.

Shuford, W. D. 1993. The Marin County Breeding Bird Atlas: A Distributional and Natural History of Coastal California Birds. California Avifauna Series 1. Bushtit Books, Bolinas, CA.

Shuford, W.D., and T. Gardali (eds). 2008. California Bird Species of Special Concern: A ranked assessment of species, subspecies, and distinct populations of birds of immediate conservation concern in California. Studies of Western Birds 1. Western Field Ornithologists, Camarillo, California, and CDFG, Sacramento.

Stebbins, R.C. 2003. A Field Guide to Western Reptiles and Amphibians, third edition. The Peterson Field Guide Series, Houghton Mifflin Company, NY.

Thomson, R.C., A.N. Wright, and H.B. Shaffer. 2016. California Amphibian and Reptile Species of Special Concern. Co-published by the California Department of Fish and Wildlife and University of California Press. Oakland, California.

U.S. Army Corps of Engineers (USACE). 2008. Regional Supplement to the Corps of Engineers Wetland Delineation Manual: Arid West Region (Version 2.0).

U.S. Army Corps of Engineers. 2005. Regulatory Guidance Letter No. 05-05. Ordinary High Water Mark Identification.

U.S. Department of Agriculture (USDA), Natural Resources Conservation Service (NRCS). 2017. Soil Web Online Soil Mapper. http://websoilsurvey.nrcs.usda.gov/app/WebSoilSurvey.aspx; most recently accessed April.

U.S. Fish and Wildlife Service (USFWS). 2012. Protocol for surveying proposed management activities that may impact northern spotted owl. Revised. Available: http://www.fws.gov/yreka/ES/2012RevisedNSOprotocol-2-15-12.pdf

U.S. Fish and Wildlife Service (USFWS). 2017. Official Species List for the Spruce Road Bridge Preventative Maintenance Project. Consultation Code: 08ESMF00-2016-SLI-1016. June.

University of California at Davis. 2017. Center for Watershed Sciences. Pisces: California Fish Data and Management Software. Available online at: http://pisces.ucdavis.edu/. Most recently accessed: February.

Western Bat Working Group (WBWG). 2017. Western bat species accounts. Available: http://wbwg.org/western-bat-species/. Accessed March.

Zeiner, D.C., W.F. Laudenslayer, Jr., K.E. Mayer, and M. White. 1990. California's Wildlife, Volume I-III: Amphibians and Reptiles, Birds, Mammals. California Statewide Wildlife Habitat Relationships System, California Department of Fish and Game, Sacramento, CA.

Appendix A – Plant and Wildlife Species Observed during the Site Visits

This page intentionally left blank

Appendix A1. Plant Species Observed During the Fairfax BPMP Bridges Site Visits (Bridges 27C0146, 27C0143, and 27C0141) on November 17, 2014, January 16 and March 16, 2015, April 12, 2016and June 23, 2016

Family	*Scientific Name*	Common Name
Other		
Hornwort (Anthocerotaceae)	*Anthceros* sp.	-
lichen	*Ramalina menziesii*	lace lichen
liverwort (Lunulariaceae)	*Lunularia* sp.	-
liverwort (Aytoniaceae)	*Reboulia* sp. (cf)	-
moss	*Alsia californica*	-
moss	*Brachythecium albicans*	-
moss	*Ceratodon purpureus*	-
moss	*Claopodium whippleanum*	-
moss	*Dendroalsia abietina*	-
moss	*Epipterygium tozeri*	-
moss	*Fissidens crispus*	-
moss	*Pohlia* sp.	-
moss	*Syntrichia princeps*	prince of mosses
moss	*Tortula muralis*	
Cupressaceae	*Sequoia sempervirens*	redwood
Dryopteridaceae	*Polystichum munitum*	western swordfern
Equisetaceae	*Equisetum arvense*	common horsetail
Polypodiaceae	*Polypodium californicum*	California polypody
Pteridaceae	*Adiantum jordanii*	California maidenhair fern
-	-	various landscape plantings
Eudicots		
Acanthaceae	Acanthus mollis	bear's breeches
Anacardiaceae	*Toxicodendron diversilobum*	poison oak
Apiaceae	*Foeniculum vulgare*	fennel
Apiaceae	*Sanicula crassicaulis*	sanicula
Apiaceae	*Scandix pectin-veneris*	Venus' needle
Apiaceae	*Torilis arvensis* ssp. *purpurea*	hedge parsley
Apocynaceae	*Vinca major*	big leaf periwinkle
Araliaceae	*Hedera helix*	English ivy
Asteraceae	*Adenocaulon bicolor*	trail marker
Asteraceae	*Carduus pycnocephalus*	Italian thistle
Asteraceae	*Taraxacum officinale*	common dandelion
Betulaceae	*Alnus rhombifolia*	white alder

Family	*Scientific Name*	Common Name
Boraginaceae	*Myosotis latifolia*	broadleaf forget me not
Brassicaceae	*Lunaria annua*	lunaria
Caprifoliaceae	*Lonicera japonica*	Japanese honeysuckle
Caprifoliaceae	*Symphoricarpos albus* var. *laevigatus*	snowberry
Caryophyllaceae	*Stellaria media*	common chickweed
Chenopodiaceae	*Chenopodium album*	lambs quarters
Cucurbitaceae	*Marah fabacea*	California man-root
Euphorbiaceae	*Euphorbia peplus*	petty spurge
Fabaceae	*Acacia melanoxylon*	blackwood acacia
Fabaceae	*Genista monspessulana*	French broom
Fabaceae	*Medicago polymorpha*	bur clover
Fabaceae	*Trifolium dubium*	little hop clover
Fabaceae	*Vicia sativa* ssp. *nigra*	narrow leaved vetch
Fagaceae	*Quercus agrifolia var. agrifolia*	coast live oak
Fagaceae	*Quercus kelloggii*	black oak
Geraniaceae	*Erodium botrys*	storks bill
Geraniaceae	*Erodium cicutarium*	storks bill
Geraniaceae	*Erodium (moschatum?)*	California filigree
Geraniaceae	*Geranium dissectum*	cut leaf geranium
Geraniaceae	*Geranium molle*	woodland geranium
Hypericacaeae	*Hypericum anagalloides*	Tinkers penny
Juglandaceae	*Juglans cinerea*	butternut
Lamiaceae	*Mentha pulegium*	penny royal
Lamiaceae	*Mentha spicata*	spearmint
Lamiaceae	*Stachys rigida* var. *querectorum*	hedge-nettle
Lauraceae	*Umbellularia californica*	California bay
Montiaceae	*Claytonia perfoliata*	miners lettuce
Moraceae	*Ficus carica*	edible fig
Myrsinaceae	*Lysimachia arvensis*	scarlet pimpernel
Oleaceae	*Ligustrum japonicum*	privet
Oxalidaceae	*Oxalis incarnata*	crimson wood sorrel
Oxalidaceae	*Oxalis pes-carpe*	Bermuda buttercup
Papaveraceae	*Fumaria capreolata*	white ramping fumitory
Plantaginaceae	*Plantago lanceolata*	English plantain
Platanaceae	*Platanus racemosa* *(P. x hispanica?)*	sycamore
Polygonaceae	*Rumex acetosella*	sheep sorrel
Polygonaceae	*Rumex conglomeratus*	dock

Family	*Scientific Name*	Common Name
Polygonaceae	*Rumex (obtusifolius*?)	bitterdock
Ranunculaceae	*Clematis ligusticifolia*	western virgins bower
Rosaceae	*Amelanchier utahensi*s	service berry
Rosaceae	*Cotoneaster pannosus*	silverleaf cotoneaster
Rosaceae	*Prunus* sp.	prunus
Rosaceae	*Pyracantha angustifolia*	firethorn
Rosaceae	*Rosa* sp.	rose (landscape plant)
Rosaceae	*Rubus armeniacus*	Himalayan blackberry
Rosaceae	*Rubus ursinus*	California blackberry
Ruscaceae	*Maianthemum (racemosum?)*	False Solomon's seal
Rubiaceae	*Galium aparine*	goosegrass
Sapindaceae	*Acer macrophyllum*	big leaf maple
Sapindaceae	*Acer negundo*	boxelder
Sapindaceae	*Aesculus californica*	buckeye
Urticaceae	*Urtica dioica*	stinging nettle
Monocots		
Alliaceae	*Allium triquetrum*	Three-cornered leek
Amaryllidaceae	*Galanthus* sp.	snowdrop (landscape plant)
Araceae	*Zantedeschia aethiopica*	calla-lily
Cyperaceae	*Carex* sp.	sedge
Cyperaceae	*Cyperus eragrostis*	tall flat nut-sedge
Iridaceae	*Chasmanthe aethiopica*	coral lily (landscape plant)
Iridaceae	*Freesia* sp. (landscape planting)	freesia
Juncaceae	*Juncus articus* var. *balticus*	Baltic rush
Juncaceae	*Juncus patens*	rush
Juncaceae	*Juncus* sp.	rush
Poaceae	*Agrostis* sp.	bent grass
Poaceae	*Avena barbata*	slender wild oat
Poaceae	*Avena fatua*	wild oat
Poaceae	*Bromus diandrus*	ripgut brome
Poaceae	*Bromus* sp.	brome
Poaceae	*Cortaderia jubata*	pampus grass
Poaceae	*Cynosurus echinatus*	hedgehog dogtail
Poaceae	*Ehrharta erecta*	panic veldtgrass
Poaceae	*Festuca myuros*	rattail grass
Poaceae	*Festuca perennis*	perennial ryegrass
Poaceae	*Hordeum murinum* sp. *murinum*	wall barley
Poaceae	*Poa annua*	annual bluegrass

Appendix A2. Wildlife Species Observed During the Fairfax BPMP Bridges Site Visits (Bridges 27C0146, 27C0143, and 27C0141) on November 17, 2014 and March 15, 2016 Site Visits.

Scientific Name	Common Name
Mammals	
Felis catus	feral cat
Sciurus griseus	western gray squirrel
Sciurus niger	fox squirrel
Odocoileus hemionus columbianus	black-tailed deer
Birds	
Aphelocoma californica	California scrub-jay
Baeolophus inornatus	oak titmouse
Cathartes aura	turkey vulture
Corvus brachyrhynchos	American crow
Euphagus cyanocephalus	Brewer's blackbird
Haemorhous mexicanus	house finch
Melanerpes formicivorus	acorn woodpecker
Picoides nuttallii	Nuttall's woodpecker
Poecile rufescens	chestnut backed chickadee
Corvus corax	common raven
Cyanocitta stelleri	Steller's jay
Spinus psaltria	lesser goldfinch
Zenaida macroura	mourning dove
Zonotrichia leucophrys	white-crowned sparrow
Fish	
Gasterosteus aculeatus	*threespine stickleback*
Cottus asper	*prickly sculpin*
Invertebrates	
Potamopyrgus antipodarum	*New Zealand mud snail*
Pieris rapae	*cabbage white*

Appendix B - USFWS Species List

This page intentionally left blank

United States Department of the Interior

FISH AND WILDLIFE SERVICE
Sacramento Fish And Wildlife Office
Federal Building
2800 Cottage Way, Room W-2605
Sacramento, CA 95825-1846
Phone: (916) 414-6600 Fax: (916) 414-6713

In Reply Refer To: June 05, 2017
Consultation Code: 08ESMF00-2016-SLI-1017
Event Code: 08ESMF00-2017-E-06072
Project Name: Spruce Road Bridge Preventative Maintenance Project

Subject: Updated list of threatened and endangered species that may occur in your proposed project location, and/or may be affected by your proposed project

To Whom It May Concern:

The enclosed species list identifies threatened, endangered, proposed and candidate species, as well as proposed and final designated critical habitat, under the jurisdiction of the U.S. Fish and Wildlife Service (Service) that may occur within the boundary of your proposed project and/or may be affected by your proposed project. The species list fulfills the requirements of the Service under section 7(c) of the Endangered Species Act (Act) of 1973, as amended (16 U.S.C. 1531 et seq.).

Please follow the link below to see if your proposed project has the potential to affect other species or their habitats under the jurisdiction of the National Marine Fisheries Service:

http://www.nwr.noaa.gov/protected_species/species_list/species_lists.html

New information based on updated surveys, changes in the abundance and distribution of species, changed habitat conditions, or other factors could change this list. Please feel free to contact us if you need more current information or assistance regarding the potential impacts to federally proposed, listed, and candidate species and federally designated and proposed critical habitat. Please note that under 50 CFR 402.12(e) of the regulations implementing section 7 of the Act, the accuracy of this species list should be verified after 90 days. This verification can be completed formally or informally as desired. The Service recommends that verification be completed by visiting the ECOS-IPaC website at regular intervals during project planning and implementation for updates to species lists and information. An updated list may be requested through the ECOS-IPaC system by completing the same process used to receive the enclosed list.

The purpose of the Act is to provide a means whereby threatened and endangered species and the ecosystems upon which they depend may be conserved. Under sections 7(a)(1) and 7(a)(2) of the Act and its implementing regulations (50 CFR 402 et seq.), Federal agencies are required to

utilize their authorities to carry out programs for the conservation of threatened and endangered species and to determine whether projects may affect threatened and endangered species and/or designated critical habitat.

A Biological Assessment is required for construction projects (or other undertakings having similar physical impacts) that are major Federal actions significantly affecting the quality of the human environment as defined in the National Environmental Policy Act (42 U.S.C. 4332(2)(c)). For projects other than major construction activities, the Service suggests that a biological evaluation similar to a Biological Assessment be prepared to determine whether the project may affect listed or proposed species and/or designated or proposed critical habitat. Recommended contents of a Biological Assessment are described at 50 CFR 402.12.

If a Federal agency determines, based on the Biological Assessment or biological evaluation, that listed species and/or designated critical habitat may be affected by the proposed project, the agency is required to consult with the Service pursuant to 50 CFR 402. In addition, the Service recommends that candidate species, proposed species and proposed critical habitat be addressed within the consultation. More information on the regulations and procedures for section 7 consultation, including the role of permit or license applicants, can be found in the "Endangered Species Consultation Handbook" at:

http://www.fws.gov/endangered/esa-library/pdf/TOC-GLOS.PDF

Please be aware that bald and golden eagles are protected under the Bald and Golden Eagle Protection Act (16 U.S.C. 668 et seq.), and projects affecting these species may require development of an eagle conservation plan (http://www.fws.gov/windenergy/eagle_guidance.html). Additionally, wind energy projects should follow the wind energy guidelines (http://www.fws.gov/windenergy/) for minimizing impacts to migratory birds and bats.

Guidance for minimizing impacts to migratory birds for projects including communications towers (e.g., cellular, digital television, radio, and emergency broadcast) can be found at: http://www.fws.gov/migratorybirds/CurrentBirdIssues/Hazards/towers/towers.htm; http://www.towerkill.com; and http://www.fws.gov/migratorybirds/CurrentBirdIssues/Hazards/towers/comtow.html.

We appreciate your concern for threatened and endangered species. The Service encourages Federal agencies to include conservation of threatened and endangered species into their project planning to further the purposes of the Act. Please include the Consultation Tracking Number in the header of this letter with any request for consultation or correspondence about your project that you submit to our office.

Attachment(s):

- Official Species List

Official Species List

This list is provided pursuant to Section 7 of the Endangered Species Act, and fulfills the requirement for Federal agencies to "request of the Secretary of the Interior information whether any species which is listed or proposed to be listed may be present in the area of a proposed action".

This species list is provided by:

Sacramento Fish And Wildlife Office
Federal Building
2800 Cottage Way, Room W-2605
Sacramento, CA 95825-1846
(916) 414-6600

Project Summary

Consultation Code: 08ESMF00-2016-SLI-1017

Event Code: 08ESMF00-2017-E-06072

Project Name: Spruce Road Bridge Preventative Maintenance Project

Project Type: BRIDGE CONSTRUCTION / MAINTENANCE

Project Description: Spruce Road Bridge (Caltrans Bridge No. 27C-0141) is a single span concrete T-beam structure over Fairfax Creek, in the Town of Fairfax, California. The bridge is presumed to have been constructed circa 1930, although the exact age of the bridge is unknown. The bridge is in a residential area of the town of Fairfax. The structure is approximately 22 feet long and 37 feet wide. It supports two lanes of traffic and two 5'-wide sidewalks and concrete railings nearly 12 feet above the creek bed. Repairs for Spruce Road Bridge will consist of sealing the deck, repair expansion joints, and patching soffit spalls. The work will be done entirely from the bridge deck and street level without being in the creek or creekbed. The work is expected to take as many as ten working days from start to finish and will occur within one dry season (April 15 - October 15).

Project Location:

Approximate location of the project can be viewed in Google Maps:
https://www.google.com/maps/place/37.98780032616711N122.59314460413627W

Counties: Marin, CA

Endangered Species Act Species

There is a total of 18 threatened, endangered, or candidate species on your species list. Species on this list should be considered in an effects analysis for your project and could include species that exist in another geographic area. For example, certain fish may appear on the species list because a project could affect downstream species. See the "Critical habitats" section below for those critical habitats that lie wholly or partially within your project area. Please contact the designated FWS office if you have questions.

Mammals

NAME	STATUS
Salt Marsh Harvest Mouse *(Reithrodontomys raviventris)* No critical habitat has been designated for this species. Species profile: https://ecos.fws.gov/ecp/species/613	Endangered

Birds

NAME	STATUS
California Clapper Rail *(Rallus longirostris obsoletus)* No critical habitat has been designated for this species. Species profile: https://ecos.fws.gov/ecp/species/4240	Endangered
California Least Tern *(Sterna antillarum browni)* No critical habitat has been designated for this species. Species profile: https://ecos.fws.gov/ecp/species/8104	Endangered
Marbled Murrelet *(Brachyramphus marmoratus)* Population: U.S.A. (CA, OR, WA) There is a **final** critical habitat designated for this species. Your location is outside the designated critical habitat. Species profile: https://ecos.fws.gov/ecp/species/4467	Threatened
Northern Spotted Owl *(Strix occidentalis caurina)* There is a **final** critical habitat designated for this species. Your location is outside the designated critical habitat. Species profile: https://ecos.fws.gov/ecp/species/1123	Threatened
Short-tailed Albatross *(Phoebastria (=Diomedea) albatrus)* No critical habitat has been designated for this species. Species profile: https://ecos.fws.gov/ecp/species/433	Endangered
Western Snowy Plover *(Charadrius alexandrinus nivosus)* Population: Pacific Coast population DPS-U.S.A. (CA, OR, WA), Mexico (within 50 miles of Pacific coast) There is a **final** critical habitat designated for this species. Your location is outside the designated critical habitat. Species profile: https://ecos.fws.gov/ecp/species/8035	Threatened

Amphibians

NAME	STATUS
California Red-legged Frog *(Rana draytonii)* There is a **final** critical habitat designated for this species. Your location is outside the designated critical habitat. Species profile: https://ecos.fws.gov/ecp/species/2891	Threatened

Fishes

NAME	STATUS
Delta Smelt *(Hypomesus transpacificus)* There is a **final** critical habitat designated for this species. Your location is outside the designated critical habitat. Species profile: https://ecos.fws.gov/ecp/species/321	Threatened
Steelhead *(Oncorhynchus (=Salmo) mykiss)* Population: Northern California DPS There is a **final** critical habitat designated for this species. Your location is outside the designated critical habitat. Species profile: https://ecos.fws.gov/ecp/species/1007	Threatened
Tidewater Goby *(Eucyclogobius newberryi)* There is a **final** critical habitat designated for this species. Your location is outside the designated critical habitat. Species profile: https://ecos.fws.gov/ecp/species/57	Endangered

Insects

NAME	STATUS
Mission Blue Butterfly *(Icaricia icarioides missionensis)* No critical habitat has been designated for this species. Species profile: https://ecos.fws.gov/ecp/species/6928	Endangered
Myrtle's Silverspot Butterfly *(Speyeria zerene myrtleae)* No critical habitat has been designated for this species. Species profile: https://ecos.fws.gov/ecp/species/6929	Endangered
San Bruno Elfin Butterfly *(Callophrys mossii bayensis)* No critical habitat has been designated for this species. Species profile: https://ecos.fws.gov/ecp/species/3394	Endangered

Flowering Plants

NAME	STATUS
Marin Dwarf-flax *(Hesperolinon congestum)* No critical habitat has been designated for this species. Species profile: https://ecos.fws.gov/ecp/species/5363	Threatened
Santa Cruz Tarplant *(Holocarpha macradenia)* There is a **final** critical habitat designated for this species. Your location is outside the designated critical habitat. Species profile: https://ecos.fws.gov/ecp/species/6832	Threatened
Showy Indian Clover *(Trifolium amoenum)* No critical habitat has been designated for this species. Species profile: https://ecos.fws.gov/ecp/species/6459	Endangered
White-rayed Pentachaeta *(Pentachaeta bellidiflora)* No critical habitat has been designated for this species. Species profile: https://ecos.fws.gov/ecp/species/7782	Endangered

Critical habitats

There are no critical habitats within your project area.

Appendix C – Preparers Qualifications

This page intentionally left blank

Kelly Biological Consulting
5San Anselmo, CA 94960
(415) 482-9703

P.O. Box 1625
Truckee, CA 96160
(530) 582-9713

CAPABILITIES

Kelly Biological Consulting is a WBE certified, small business experienced in conducting wetland delineations and special status plant surveys, creating vegetation maps, preparing permits, mitigation plans, and the vegetation sections of CEQA and NEPA environmental documents. The firm's primary goals are responding to client needs and providing top quality work using the knowledge that comes from years of experience. Kelly Biological Consulting subcontracts wildlife and fisheries biologists to offer a full range of biological services.

PRINCIPAL

Micki Kelly, Principal, Plant Ecologist
Professional Wetland Scientist (Certification #001007)

- Experienced in conducting plant surveys and wetland delineations in a wide variety of habitats.
- Managed the wetland permitting tasks for construction of a gas transmission line that crossed over 200 wetlands and "other waters" in California, Oregon, and Nevada. Negotiated with 3 U.S. Army Corps of Engineers Districts, 5 Regional Water Quality Control Boards, and other agencies pursuant to the Clean Water Act Sections 401, 402, and 404, and the Porter Cologne Act.
- Taught plant identification and ecology for the U.S. Army Corps of Engineers wetland delineation 40-hour training program. Also taught a class in Sierra Nevada flora and special status plants.
- Designed and implemented a monitoring plan that provided accurate comprehensive data while controlling costs for the 230-mile Tuscarora Gas Transmission Line and the 164-mile Alturas Intertie Project.
- Developed and implemented two large-scale off-site wetland mitigation areas.
- Received written commendation from the U.S. Army Corps of Engineers and California Department of Fish and Wildlife on a wetland permit and mitigation plan for a project in the Sierra foothills involving a Section 7 consultation.

Ms. Kelly has 25 years of relevant experience, successfully managing multi-faceted projects with wetland and endangered species issues, supervising staff and subcontractors. She completes projects on time and within budget. She studied plant ecology, taxonomy, and statistics at the University of Michigan, San Francisco State University, and the University of California, Berkeley. She has taught plant identification and ecology for the U.S. Army Corps of Engineers wetland delineation 40-hour training program. Prior to establishing Kelly Biological Consulting in 1994, she worked as a plant ecologist for WRA, CH2MHill, and Harding Lawson Associates.

Ms. Kelly has conducted sensitive plant species surveys and written impact and mitigation texts for California Environmental Quality Act (CEQA) and National Environmental Policy Act (NEPA) documents and as well as baseline information on restoration sites. She is experienced in designing sensitive plant surveys in accordance with the current California Native Plant Society and the California Department of Fish and Wildlife guidelines. She has conducted vegetation studies in habitats ranging from coastal salt marsh to foothill riparian and montane meadows in California and Nevada. She has extensive experience in designing suitable search patterns based on the desired level of intensity. Ms. Kelly has prepared biological assessments and developed special status plant mitigation and monitoring plans requiring substantial understanding of plant ecology.

Ms. Kelly has performed wetland assessments and delineations on numerous projects including complex filled and excavated problem wetlands, montane areas, farmed wetlands, two diked historic salt marshes that were over 1,000 acres, numerous small emergent wetlands, several 2,000+ acre sites in the Sierra Nevada, alkali playas, foothill riparian zones, and coastal salt marsh restoration sites. Ms. Kelly has expertise in Army Corps of Engineers approved sampling techniques and the data analysis that is used in performing routine and comprehensive delineation. She has developed and implemented wetland monitoring plans using the techniques currently known to be the most successful in wetland mitigation design and construction.

Ms. Kelly has extensive experience in the legal aspects of sensitive species and wetland protection. She has authored Army Corps of Engineers Permits involving Section 7 consultations, one of which received written commendation from the Army Corps of Engineers and Department of Fish and Game.

EDUCATION

BS Botany, University of Michigan
Graduate studies, University of California Berkeley and San Francisco State University

PROFESSIONAL SOCIETIES

Society of Wetland Scientists, Certified Professional Wetland Scientist
California Native Plant Society, Past Marin Chapter Board Member (8 years)
Society for Ecological Restoration
California Botanical Society
California Native Grass Association
California Invasive Plant Council (Cal-IPC)

REPRESENTATIVE PROJECTS

Project: **Central Marin Police Station, Larkspur, CA**
Client: **Central Marin Police Authority**

The Twin Cites Police Authority was planning to rebuild their police station when concerns about the existing storm drain outfalls and bank stability arose. Initial building construction was pending. Therefore, the first challenge was obtaining the federal and state permits quickly, even though sensitive brackish marsh habitat was adjacent to the site. Kelly Biological Consulting was able to conduct the wetland delineation and special status species surveys, and expedite the permits within the project deadlines. The second challenge was the site constraints (physical and biological). The site is on the outside bank of a ninety-degree bend in the creek, at the junction of freshwater and tidal flows. It is subject to large hydraulic forces in the winter and high salinity in the summer. In conjunction with the project geotechnical firm and the engineers, Ms. Kelly developed a restoration

design that successfully addressed the difficult site conditions. Ms. Kelly is currently conducting the wetland monitoring.

Project: Doherty Drive, Larkspur, CA
Client: Larkspur Department of Public Works (partially funded by Caltrans)

The Larkspur Department of Public Works rebuilt Doherty Drive and replaced storm drain outfall structures to address flood control and other road problems. In addition, they incorporated an NTTP bike path. One of the challenges of the project was dealing with construction within brackish marsh habitat where special status species are known to occur, while working within a tight schedule. Kelly Biological Consulting conducted a wetland delineation and botanical studies. The firm prepared the permit applications, and negotiated with the regulatory agencies with the goal of constructing the outfalls in a timely, cost effective manner. Construction was completed with positive reviews from the agencies.

Project: Alexander Avenue Bridge Retrofit/Rehabilitation, Larkspur, CA
Client: Larkspur Department of Public Works (partially funded by Caltrans)

The Larkspur Department of Public Works retrofitted and rehabilitated the Alexander Ave. Bridge. Kelly Biological Consulting provided pre-construction monitoring which was conducted by WRA as a subcontractor. Ms Kelly also negotiated with California Department of Fish and Wildlife regarding tree removal and planted acorns as mitigation for tree removal.

Project: Doherty Drive Bridge Replacement, Larkspur, CA
Client: Larkspur Department of Public Works (partially funded by Caltrans)

The Larkspur Department of Public Works replaced Doherty Drive Bridge. The project required construction within brackish marsh habitat and a creek where special status species are known to occur. Kelly Biological Consulting provided construction monitoring with WRA as a subcontractor. Due to schedule issues, the project required working within protected species work windows. Ms Kelly negotiated with the regulatory agencies with the goal of completing construction to avoid the additional impacts to the community that would have occurred had construction been halted until the following season.

Project: Highway Interchange, San Benito, CA
Client: Subcontractor to WRA

A proposed project required the evaluation of potential interchange alternatives. The site was near the Pajaro River. Kelly Biological Consulting conducted the special status plant surveys and contributed to preparation of the NES.

Project: Caltrans Marin Narrows Road Widening, Marin County, CA
Client: Subcontractor to WRA

Kelly Biological Consulting conducted a wetland delineation for the proposed Highway 101 widening in Marin as a subcontractor to WRA and CH2MHill. Work included field analysis, report and map preparation, and supervising WRA and CH2MHill staff. The most challenging element of the work was addressing SWANCC and Rapanos issues along a highway that had highly altered hydrology.

Project: U.S. Army Corps of Engineers Wetland Training Class, CA
Client: San Francisco State University

Ms. Kelly has taught the plant ecology portion of a wetland delineation class. The students learned the basic elements of plant identification, methods for determining wetland status, dominant species, and the wetland-upland boundary.

Information on additional projects available on request.

DANIEL CHASE, MS

Associate
Fisheries Biologist

chase@wra-ca.com
o: 415.524.7252
c: 707.363.5045

Years of Experience: 10

Education

MS, Physiology and Behavioral Biology, San Francisco State University, 2014

BS, Conservation and Resource Studies, University of California, Berkeley, 2005

Professional Affiliations/ Certifications

USFWS Recovery Permit for Tidewater Goby (TE-237061)

CDFG Scientific Collectors Permit (#8472)

Transportation Worker Identification Credential (TWIC)

American Association for the Advancement of Science

Specialized Training

40-Hour HAZWOPER Training

Fish Passage Design & Engineering Workshop, CDFG, NOAA Fisheries

Backpack Electrofishing: Principles and Practices

Freshwater Fish Identification – Biology, Ecology & Morphology

During his time with WRA, Dan has managed and worked on a diversity of fisheries and wildlife related projects including permitting, endangered species consultation, protocol level surveys, habitat evaluation and assessments, rescue and relocation, and monitoring. He has extensive experience with fisheries related issues throughout California, and currently holds a Recovery Permit from the U.S. Fish and Wildlife Service (USFWS) for tidewater goby. His technical expertise includes fisheries ecology, fish passage evaluation, geomorphic surveying, special status species surveys, habitat assessments, and eelgrass surveys. Dan's environmental work experience prior to starting with WRA includes fisheries and wildlife work in southern California, eelgrass work in Washington, and oil spill response in the Gulf of Mexico.

Dan has experience with environmental permitting including Endangered Species Act Section 7 and Essential Fish Habitat consultation, California Department of Fish and Wildlife (CDFW) Streambed Alteration Agreements, CDFW Incidental Take Permits (2081), and biological resource assessments prepared for the California Environmental Quality Act (CEQA). His experience includes the preparation of technical documents and implementation of permit compliance, mitigation, and monitoring requirements for these permits. Dan has experience with special status species including: longfin smelt, tidewater goby, steelhead, Chinook salmon, Santa Ana sucker, unarmored threespine stickleback, California red-legged frog, California tiger salamander, burrowing owl, clapper rail, black rail, Swainson's hawk, Bay checkerspot butterfly, Callippe silverspot butterfly, pool fairy shrimp, and tadpole shrimp.

Representative Projects

County of Santa Clara, Bridge Scour Natural Environmental Studies, Santa Clara County, California

Twelve bridge locations within Santa Clara County were identified by Caltrans as having critical abutment scour necessitating repair. The Santa Clara County Roads and Airports Department, with funding from Caltrans, is completing the repairs, working with the Caltrans Office of Local Assistance. To complete these repairs, each bridge site was required to complete a Natural Environment Study (Minimal Impact) (NES MI) to evaluate the potential for impacts to biological resources, analyze permit requirements, and describe avoidance, minimization, and mitigation measures. Dan served as a lead biologist and his project work included site visits, design of mitigation and avoidance measures, and agency coordination in the preparation of the documents. Once permits were issued, including a National Marine Fisheries Service Biological Opinion, he lead fish salvage crews during dewatering activities.

Old Canyon Road Bridge Scour Repair Biological Surveys and Permitting, Fremont, California
WRA is teaming with David J. Powers & Associates and Schaaf & Wheeler to complete the environmental review and permitting studies necessary to repair scour on a bridge across Alameda Creek in Fremont, California. Alameda Creek is not currently an anadromous fish stream, but restoration will begin in 2014 to construct fish ladders and return anadromous steelhead to Alameda Creek. The Old Canyon Road Bridge currently presents a low-flow fish passage barrier due to the presence of poured concrete in the creek bed beneath the bridge. The bridge scour repair will remove the concrete and install rock protection around the bridge abutments. WRA prepared Caltrans biological resources documentation for the project and engaged with the National Marine Fisheries Service in a Technical Assistance for concurrence that the design would not be detrimental to fish passage once the downstream fish ladders had been completed. WRA worked with the project engineers to assess potential fish passage issues at the bridge and to develop plans for fish passage that meet the National Marine Fisheries Service and California Department of Fish and Wildlife standards for fish passage. Dan was the project lead fisheries biologist for WRA and was involved in the preparation of environmental documentation and resource agency permit applications.

Mare Island Ship Yard Dry Dock Fish Salvage, Vallejo, California
Marine vessels and barges are brought to the dry docks at the former Mare Island Naval Shipyard to be serviced and repaired. In accordance with permit requirements of USFWS, National Marine Fisheries Service (NMFS), and CDFW, biologists are required to be present during final stages of dewatering to salvage (rescue) stranded fish from the dry dock. Dan serves as project manager and lead fisheries biologist. He is responsible for leading field crews, coordinating with resource agency personnel, ensuring permit compliance, and authoring technical reports following each salvage event. He has also led consultation meetings, prepared biological assessments for the NMFS and USFWS permits, and assisted with amending an existing CDFW permit to reduce mitigation requirements for the dry dock. He is authorized to handle and relocate longfin smelt, Delta smelt, steelhead, Chinook salmon and green sturgeon at this site. This project is ongoing.

Pastori Avenue Bridge Outfall, Marin County, California
Dan served as the lead fisheries biologist for a bank stability and outfall project in San Anselmo Creek within the town of Fairfax. Project work included a multi-day fish rescue and relocation under the authorization of a NMFS Biological Opinion. Several juvenile steelhead were successfully relocated out of the work area prior to the initiation of construction. During project work, Dan identified the invasive New Zealand mudsnail in the creek, which had previously not been documented for this watershed. NMFS and CDFW were notified of the occurrence.

Caltrans Southern California Lagoon Study, San Diego County, California
California Department of Transportation is analyzing impacts and potential sources of mitigation for sensitive species and habitat for the Interstate 5 widening in San Diego County. As part of an analysis for increases in tidal inundation, Dan participated in wetland assessments and led field crews in biological assessments and topographic surveys within six coastal lagoons in northern San Diego County. During the biological assessments, several coastal California gnatcatcher pairs were identified and suitable breeding habitat for the species was mapped. The second phase of this project, which involves computer based simulation and analysis of increased tidal inundation, is ongoing.

Salmonid Habitat Assessment and Relocation in California
Dan has worked on several projects designed to assess potential habitat for salmonid species. Survey techniques include CDFG protocol level stream habitat assessment, red and carcass spawning surveys, substrate composition and permeability sampling, geomorphic surveys, water quality sampling and analysis, various forms of netting and trapping, and snorkel surveys for identification purposes. Survey work has been conducted in Napa, Sonoma, Shasta, Santa Clara, Monterey, San Luis Obispo, Santa Barbara, Ventura, and Kern Counties.

Permanente Quarry Aquatic Baseline, Santa Clara County, California
Permanente Quarry is a 3600 acre property located in western Santa Clara County at the northern extent of the Santa Cruz Mountains. As part of the quarry's planned expansion, Dan designed and implemented a study of the habitat and aquatic fauna of two headwater creeks on the property. The following field studies were completed as part of this work: fish were surveyed by seine and visually to determine species composition, distribution and relative abundance; nocturnal time-constraint visual encounter surveys were employed to document amphibian species composition, distribution and relative abundance; benthic macroinvertebrates (BMI) were sampled at eight representative locations in accordance with the California Stream Bioassessment Procedure (CSBP). The collected BMIs were sorted by taxa and the data analyzed according to accepted metrics; and a detailed physical habitat study was conducted to quantify the condition and value of the current aquatic habitat. A technical report was completed that will serve as a baseline of the available habitat and existing fauna within the two watersheds.

Grady Ranch Creek Restoration and Permitting, Marin County, California
As part of a proposed Grady Ranch Development in Marin County, a large scale creek restoration and fish passage improvement was designed and permitted. WRA provided biological services which included fish passage assessment, habitat mapping, fisheries surveys, California red-legged frog protocol level surveys, design review, agency consultation, permitting, and the preparation of long term monitoring plans. Dan served as the lead fisheries biologist for the project, and was involved with biological surveys, fish passage assessments, habitat mapping, consultation, and prepared a biological assessment to support the projects permits. While the project never went to construction, the restoration design was the process of receiving approval from the resource agencies.

Fish Passage Assessment in California
Dan has worked with several teams on the identification and assessment of fish passage barriers for anadromous species, which involved onsite qualitative habitat analysis and quantitative data collection utilizing a Total Station Survey Instrument. His survey work and professional assessments have been used as supplemental components to technical reports and as part of a state wide database that is in process for Caltrans. Fish passage assessments have been performed in various watersheds of Marin, Contra Costa, Monterey, Santa Barbara, Ventura and Los Angeles Counties.

Santa Clara River Estuary Habitat Restoration and Enhancement Feasibility Study, Ventura County, California
A Fisheries Restoration Grant Program through CDFW funded a feasibility study and conceptual design development for the restoration of estuarine fish habitat along the Santa Clara River Estuary. Following the preparation of an existing conditions technical report, stake holder outreach and restoration designs were crafted to focus on the conversion of an existing developed campground back to higher quality estuarine habitat. The campground would then be relocated from its current footprint. Dan served as the project manager and lead biologist. His work included a habitat assessment, report preparation, design review, participation in outreach meetings, and team management. The final feasibility report for the preferred concept will be released in 2015.

Napa Dry Bypass Flood Control, Napa County, California
As part of a comprehensive flood control program for Napa County, a high flow bypass channel and creek restoration at the confluence of Napa Creek and Napa River was constructed in downtown Napa. Dan served as the project's lead fisheries biologist, which involved fish rescue and relocation, otter trawl fish sampling, fish exclusion, pile driving monitoring, and daily construction checks. He also assisted Napa County Flood Control District with a permit amendment to the project's CDFW Incidental Take Permit. The completion of the dry bypass project resulted in increased flood capacity and improved habitat conditions for special-status fish including steelhead and longfin smelt.

Marin County Public Works Fisheries Services, Marin County, California
Marin County Department of Public Works (MCDPW) underwent maintenance sediment removal at multiple culverts in West Marin. WRA provided biological support services for the sediment removal, which included pre-construction California red-legged frog surveys, environmental training, fish rescue and relocation and biological monitoring. During fish relocation, tidewater goby was encountered in an area they had not previously been documented to occur. Following the project work, WRA prepared a supplemental biological assessment of tidewater goby addressing sediment removal activities for MCDPW. Dan served as the project manager, lead fisheries biologist, and authored the supplemental biological assessment.

Callippe Preserve, Pleasanton, California
The Callippe Preserve was established as mitigation for the construction of the Pleasanton Municipal (Callippe) Golf Course. As a component of the wildlife management plan and USFWS Biological Opinion, Dan has conducted hydrological monitoring, annual sampling for California Tiger Salamander, and required predator monitoring and removal within the Preserve Conservation Areas. In 2009, Dan discovered a new population of California red-legged frog within a Preserve Conservation Area pond. Predator removal via hand capture, hook and line, gigging, shooting, and dipnet capture continued throughout 2009 and 2010. Successful breeding of California red-legged frog was confirmed in 2010. In October 2010, Dan, with approval of the USFWS and the landowner, dewatered the pond using a gasoline-powered trash-pump to rid it of bass and bullfrogs. Monitoring is ongoing, however California red-legged frog breeding success is expected to improve in 2012. In the fall of 2013, non-native predatory fish were detected in the golf course irrigation ponds. Dan assisted with draining the ponds and eradicate the fish in compliance with the USFWS Biological Opinion and associated management plans. Dan assisted with the captured and retention of 22 CRLF during the dewatering. CRLF were released back into the irrigation ponds as soon as refilling resumed.

Frenchman's Creek Water District, San Mateo County, California
Frenchman's Creek Water District (FCWD) is a small water service provider located north of Half Moon Bay along coastal San Mateo County. A CDFW 1602 permit allows for the temporary installation of a flashboard dam and water withdrawal from the system. Dan serves as the fisheries biologist for this project and the FCWD, which involves monitoring flow and habitat conditions during the diversion period, permit compliance, and annual reporting. This project is currently ongoing.

Potrero Creek Restoration Carmel, California
Dan helped design, manage and implement the restoration of Potrero Creek, in the Carmel Valley, California. A large landslide altered the existing channel and was undermining a road. Dan aided with the design to restore the previous channel alignment and use the altered channel as a high water channel which would provide rearing habitat for steelhead and California red-legged frog. He conducted environmental training for the workers, pre and post restoration geomorphic surveys, served as the onsite biological monitor and restoration manager during construction, and assisted with the permitting of the project.

Draper Inverness Dock Permitting, Marin County, California
In accordance with permit requirements of USFWS and NMFS, Dan performed pre-construction eelgrass surveys at a dock replacement project in Tomales Bay. Dan also performed daily construction monitoring for all inwater work, conducted environmental sensitivity training to on-site construction staff, and monitored environmental permit compliance for the project. Construction involved removal of creosote piles and installation of eelgrass friendly deck grating that allows light to penetrate beneath it. Following the construction of the dock, Dan led annual monitoring work to document the project effect on the eelgrass bed. Monitoring was completed in 2012 when the eelgrass bed was confirmed to have recovered to pre-construction conditions.

PATRICIA VALCARCEL, MS

Wildlife Biologist

valcarel@wra-ca.com

o: 415.454.8868 x1220

Years of Experience: 9

Education

MS, Wildlife Sciences, Oregon State University, 2011

BA, Environmental Sciences, Northwestern University, 2003

Professional Affiliations/ Certifications

USFWS Recovery Permit for giant gartersnake and San Francisco gartersnake (TE-64146A)

California Department of Fish and Wildlife Scientific Collecting Permit

The Wildlife Society

Specialized Training

- Biology and Management of the Alameda Striped Racer, Alameda County Conservation Partnership, May 2014
- San Joaquin Kit Fox Ecology, Conservation, and Survey Techniques, Central Coast Chapter of The Wildlife Society, Summer 2013
- Swainson's Hawks in California's Central Valley, Sacramento-Shasta Chapter of The Wildlife Society, Spring 2012
- Workshop on the Biology and Conservation of the California Tiger Salamander, Alameda County Conservation Partnership, June 2012
- Amphibian Inventory and Monitoring Protocol, Northwest Partners in Amphibian and Reptile Conservation, Spring 2011

Patricia Valcarcel earned a MS in Wildlife Sciences while conducting research on the spatial ecology of the threatened giant gartersnake. She has worked on a variety of field research projects ranging from animal movements to behavior and reproduction. She has presented her work at many conferences and published in peer-reviewed journals.

Patricia has extensive experience working with giant gartersnakes in the Sacramento Valley and assisted with mark-recapture surveys for San Francisco gartersnakes in San Mateo County. She has performed surveys and other activities related to California red-legged frog in Alameda, San Mateo, Los Angeles, Solano, and Sonoma Counties. Patricia also has extensive experience throughout California's Central Valley including protocol-level surveys for Swainson's hawk, burrowing owl, and assessments for San Joaquin kit fox and blunt-nosed leopard lizard. In addition, she has conducted observations and coordinated compliance for Pacific herring spawning in San Francisco Bay.

Patricia's primary responsibilities are to conduct surveys, habitat assessments, and write associated biological assessment and technical reports for special-status wildlife species. She has experience with the San Joaquin County Multi-Species Habitat Conservation Plan as one of the on-call biologists for the San Joaquin Council of Governments. In addition, Patricia is involved in environmental permitting, permit compliance, and mitigation and monitoring efforts associated with these permits.

Representative Projects

East Bay Municipal Utility District Mokelumne Aqueduct Project, San Joaquin County, California 2012 – 2013

Recoating of the Mokelumne Aqueduct Phase 8 – Slough Crossing Project will be conducted at four project sites located in San Joaquin and Contra Costa counties. In accordance with permits, a USFWS-approved giant gartersnake biologist is needed to perform pre-construction surveys and compliance monitoring. Patricia holds a USFWS Recovery Permit for giant gartersnake and was approved to perform the pre-construction surveys. She also monitored a Swainson's hawk nest within the Project Area to confirm nesting status of the pair and EBMUD compliance with avoidance measures.

San Joaquin Council of Governments, San Joaquin County, California 2012 – Present

WRA is contracted for on-call services related to the San Joaquin County Multi-Species Habitat Conservation and Open Space Plan (SJMSCP). Patricia has performed pre-construction surveys and recommended avoidance and minimization measures to ensure participants are in compliance with the SJMSCP. Wildlife species and habitats Patricia has encountered as part of this work include burrowing owl, California tiger salamander, and Swainson's hawk. In addition, Patricia prepared and consulted with the California Department of Fish and Wildlife on a burrowing owl exclusion plan. Following approval by CDFW, Patricia implemented the exclusion and monitoring plan.

Ridge Top Ranch Wildlife Conservation Bank, Solano County, California 2012 – 2015
WRA and Ridge Top Ranch, LLC (RTR) are in the process of developing over 280 acres of high quality California red-legged frog and callippe silverspot butterfly mitigation habitat located within Solano County, California. WRA, in consultation with the USFWs and under 10(a)(1)(A) Recovery Permit TE-212445-0, successfully translocated California red-legged frogs to created habitat within the RTR Wildlife Conservation Bank. WRA has been involved throughout the process, from selecting donor sites and planning habitat creation, to translocation of egg masses and monitoring the frogs to ensure that establishment at the receiving site was successful. Through the monitoring phase, Patricia assisted permit-holder Rob Schell in survey efforts, which included egg mass surveys at the donor site, visual counts at the receiving ponds, as well as the capture and handling of juvenile red-legged frogs to measure and install PIT tags. She also conducted a Callippe silverspot butterfly survey as part of annual monitoring efforts. Monitoring at this site is ongoing, and the Conservation Bank is in the final permitting stages.

Napa Valley Marina Permitting and Dredge Monitoring, Napa, California 2012 – Present
The Napa Valley Marina is an active recreational marina along the Napa River near Bull Island. Maintenance dredging of the Marina is necessary for boat access to and from the Napa River. Patricia is involved with a variety of environmental consulting services for the maintenance dredging including preparation of applications for the Dredged Materials Management Office (DMMO) and the California Department of Fish and Wildlife Streambed Alteration Agreement. Maintenance dredging permits included monitoring for special-status species and habitat conditions such as temperature and salinity monitoring for longfin smelt. Patricia oversees monitoring and compliance surveys for the multi-year maintenance dredging project.

Port of Richmond Inner Harbor Maintenance Dredging, Richmond, California 2014 – 2015
Maintenance dredging of the Port of Richmond Inner Harbor Channel was necessary to maintain passageways for the active port. The Pacific herring is a protected fishery, and dredging operations within the Pacific herring spawning season were unavoidable. Patricia was a California Department of Fish and Wildlife approved observer for the Project, and she coordinated a team of observers for the maintenance dredging Project. One spawning event occurred within the Project Area during dredging activities and Patricia consulted with CDFW to establish buffers. All Project activities were completed in compliance with the Project's Pacific Herring Work Window Waiver.

Bruno's Island Bridge Repair Project, Southwestern Sacramento County, California 2014
Bruno's Island is a small recreational boat harbor located off Andrus Island along the San Joaquin River in the western Delta. Bridge repair activities included sheathing piles within the channel and could potentially affect listed aquatic species. Patricia provided the hydroacoustic analysis and wrote the Section 7 Biological Assessment for Delta smelt, steelhead, and giant gartersnake. Through her work and advising on project design such as strike limits and use of bubble curtains outside of the work windows, a "Not Likely to Adversely Affect" was received from both NMFS and USFWS. This Project was completed in 2014.

12 Bridges, Santa Clara County, California 2012 – 2013
WRA was engaged by the County to prepare Natural Environment Study (Minimal Impact) reports, permitting documents, and Revegetation and Monitoring Plans for twelve bridges with critical abutment scour located throughout Santa Clara County, California. Patricia aided in the preparation of the Section 7 Biological Assessments for six of the bridges which incorporated California red-legged frog, California tiger salamander, Least Bell's vireo, and salmonid species. Based on those plans, she has conducted the pre-construction surveys and biological monitoring required by the U.S. Fish and Wildlife Service Biological Opinion in 2012 and 2013 work seasons.

Burrowing Owl Surveys and Passive Exclusion, Legacy on 101, San Jose, California 2014
The Legacy on 101 project is a 16.35 acre property in Santa Clara, California that is to be developed into two 6-story industrial park/office/R&D buildings. The area is known to support burrowing owl, and a series of take avoidance surveys was conducted from 2008 to 2014. Patricia observed one burrowing owl occupying the property in 2014. Patricia developed the exclusion and monitoring plan submitted to CDFW. During the non-nesting season, she passively excluded the owl and excavated all potential burrows at the site. Patricia conducted monitoring at the site every other week until construction activities were initiated and performed a pre-construction survey immediately prior to grading, per the exclusion plan.

Napa Dry Bypass, Napa, California 2014
The Napa Dry Bypass is designed to divert 100 year flows around the oxbow reach to avoid flooding the Soscol Gateway area in downtown Napa. Patricia is a CDFW-approved biologist for this Project, and Patricia has been involved with this project by monitoring compliance and construction activities during excavations of the new river channel, as well as assisting with fish rescues within the coffer dams. Project permits include Biological Opinions from National Marine Fisheries Service and California Department of Fish and Wildlife Incidental Take Permits for steelhead (Central California Coast DPS), Delta smelt, and longfin smelt.

Marin County Department of Public Works Flood Control Line Replacement, San Rafael, California 2013
The Marin County Department of Public Works manages flood control projects throughout the county, including the city of San Rafael. The project consists of replacing an aging flood diversion pipe in a low-lying residential area adjacent to the south fork of Gallinas Creek. The project area is located in a salt marsh slough and has known populations of California clapper rail and salt-marsh harvest mouse. Patricia was a USFWS-approved biological monitor for the project and has monitored construction to ensure compliance with the project's regulatory permits. Several California clapper rails were observed at short range and within the project area, and Patricia stopped work activities until the birds had safely left of the own volition.

Fitzgerald Marine Reserve Coastal Trail, San Mateo County, California 2012 – 2013
The Fitzgerald Marine Reserve project includes the design of a portion of the California Coastal Trail in San Mateo County, California. Major components of the project, in addition to the multi-use trail, included a free span pedestrian bridge and improved beach access and overlook. WRA provided environmental services in support of the proposed trail and public access improvements, and existing sensitive habitats were avoided to the extent possible in the public access design. WRA prepared the conceptual designs for the trail and improved access to the overlook and beach, performed wetland delineations, completed biological surveys, and prepared permit applications. As part of this process, Patricia was approved by the U.S. Fish and Wildlife Service under the Biological Opinion for the project to perform the pre-construction surveys and monitoring for San Francisco gartersnake and California red-legged frog. In addition, she provided advice on the design and materials for the wildlife exclusion fence, and oversaw its installation.

Nicholas Brinton, BS
Fisheries Biologist
brinton@wra-ca.com
o: 415.454.8868 x1780
c: 909.275.2358

Years of Experience: 3

Education
BS Wildlife, Fish and Conservation Biology, UC Davis, 2012

Professional Affiliations/ Certifications

American Fisheries Society

Nick holds a B.S. degree in Wildlife, Fish and Conservation Biology from the University of California, Davis. His coursework included ichthyology, mammalogy, ornithology, waterfowl and wetland management, population dynamics and invasive plant ecology.

Prior to joining WRA, Nick worked as a biological monitor on a transmission line project where he gained experience working with California tiger salamander, western spadefoot toad and nesting birds. In addition, he worked for two years as a Fisheries Technician in both the private and public sector. His work primarily revolved around population monitoring, invasive species removal, water quality and habitat assessments. He has worked extensively with Lahontan cutthroat trout and native species of the Sierra Nevada Mountains. Nick has also worked with the UC Davis Museum of Wildlife and Fish Biology and performed a cursory study on small mammal distribution throughout the state of North Dakota. He conducted live-trapping and collected specimens for the museum. The data collected was presented to the museum and the Smithsonian Institute in support of follow-up studies.

With WRA, Nick conducts fish salvages, habitat assessments, biological monitoring, focused wildlife surveys, and writes biological assessment reports. He has trained with Rob Schell, a U.S. Fish and Wildlife Service Recovery Permit holder for California red-legged frog (CRLF); Jason Yakich, Recovery Permit holder for California clapper rail (CCR); and Kate Allan, Recovery Permit holder for salt marsh harvest mouse (SMHM).

Representative Projects

Amy's Kitchen, Rohnert Park, California, 2014 – Present
During construction of facilities for Amy's Kitchen in Rhonert Park, Nick was approved by CDFW as a biological monitor for California tiger salamander (CTS). During the course of the project, Nick monitored for environmental compliance at the site to assure that there was no take of covered species during construction. To date, no take of CTS has occurred.

Port of Richmond Inner Harbor Maintenance Dredging, Richmond, California 2014 – 2015
Maintenance dredging for the Port of Richmond Inner Harbor Channel was conducted in the winter of 2014 to maintain passageways for ships entering the port. Pacific herring is a protected fishery, and dredging operations within the harbor overlapped with the Pacific herring spawning season. Nick was an approved California Department of Fish and Wildlife observer for the Project. During operations, one spawning event occurred within the Project Area. Nick observed the spawning event and informed crews on the required buffers to maintain compliance. All Project activities were completed in compliance with the Project's Pacific Herring Work Window Waiver.

Mare Island Ship Yard Dry Dock Fish Salvage, Vallejo, California 2014, - Present
Mothballed vessels from the National Defense Reserve Fleet in Suisun Bay and private ships needing repair are brought to the dry docks at the former Mare Island Naval Shipyard. In accordance with permit requirements of USFWS, National Marine Fisheries Service (NMFS), and CDFW, biologists are required to be present during final stages of dewatering to salvage (rescue) stranded fish from the dry dock. Captured fish are placed in aerated holding coolers, identified to species, counted and measured before being returned to the Mare Island Channel of the Napa River. Nick is a lead fisheries biologist for this operation. He is responsible for leading a team of biologists who conduct salvage operations. He also coordinates with resource agency personnel, ensuring permit compliance, and writes technical reports following each salvage event. He is authorized to handle and relocate longfin smelt, Delta smelt, steelhead, Chinook salmon and green sturgeon at this site. This project is ongoing.

Healdsburg Veterans Memorial Dam Spillway Repair, Healdsburg, California, 2014
The Healdsburg Veterans Memorial Dam is a flashboard dam located within the city of Healdsburg on the Russian River. The dam is installed seasonally to create a temporary recreational lake. For this project, Nick was approved as the lead fisheries biologist, and biological monitor. He conducted pre-construction surveys for breeding birds as well as pacific pond turtle (PPT), and positively identified PPT in the project area. As the lead fisheries biologist he lead a team of biologists who performed multiple fish salvages within the project area following de-watering events. His team successfully identified, and safely re-located steelhead that were salvaged during the dewatering. Nick also conducted biological monitoring for PPT and special-status fish throughout the duration of the project to ensure that project activities were in compliance with agency permits. He conducted pre-construction checks, environmental trainings, and water temperature monitoring. The project was completed in compliance with relevant permits with no take of any special-status species.

Frenchman's Creek Water District, San Mateo County, 2013 - Present
Frenchman's Creek Water District (FCWD) is a small water service provider located north of Half Moon Bay along coastal San Mateo County. A CDFW 1602 permit allows for the temporary installation of a flashboard dam and water withdrawal from the system. Nick serves as a fisheries biologist for this project, which involves monitoring flow and habitat conditions for steelhead during the diversion period, permit compliance, and annual reporting. This project is currently ongoing.

Napa Dry Bypass, Napa, California, 2014 - Present
The Napa Dry Bypass is designed to divert 100 year flows around the oxbow reach of the Napa River to avoid flooding the Soscol Gateway area in downtown Napa. Nick has been approved as a lead fisheries biologist on this project and has conducted multiple fish salvage operations for longfin smelt, and steelhead. Nick also assisted in the otter trawl surveys and fish exclusion work which were required during impact hammer pile driving operations. He has also been involved with this project by monitoring compliance and construction activities including impact hammer pile driving. In addition, he assisted in the design and implementation of the environmental awareness training program to comply with both the streambed alteration agreement and incidental take permits. This project is ongoing.

Pristine Sun Solar Projects Pre-construction Surveys, California, 2014-Present
WRA was contracted to implement environmental compliance measures for several Pristine Sun projects. Projects involved creating 0.5-1 MW solar generation facilities in Glenn, and Shasta Counties. As part of these measures, Nick performed pre-construction surveys for Swainson's hawk, white-tailed kite, long-eared owl, burrowing owl, and breeding birds at two sites.

Proposed Canyon Road Bridge

BPMP Project

Natural Environment Study

Canyon Road Bridge BPMP

Town of Fairfax, Marin County

Bridge Number: 27C 0146

Project Number: BPMP 5277 (026)

Locator: [District 4]-[MRN]-[0]-[FRFX]

September 2017

Caltrans
CALIFORNIA DEPARTMENT OF TRANSPORTATION

Proposed Canyon Road Bridge
BPMP Project
Natural Environment Study

STATE OF CALIFORNIA
Department of Transportation
Town of Fairfax
BPMP 5277 (026)

Prepared By: Micki Kelly Date: 9/8/2017
Micki Kelly, PWS, Principal
415-482-9703
Kelly Biological Consulting
San Anselmo, CA

Prepared By: Pat Valcarcel Date: 9/15/17
Patricia Valcarcel, Wildlife Biologist
415-524-7542
WRA, Inc.
San Rafael, California

Approved By: Garrett Toy Date: 9/13/17
Garrett Toy, Town Manager
415-453-1584
Town of Fairfax
Fairfax, California

Recommended for Concurrence by (Caltrans): _____ Date: _____
Hugo Ahumada, Associate Environmental Planner
510-622-8790
Office of Local Assistance District 4
Caltrans, District 4
Oakland, California

Concurred By: _____ Date: _____
Thomas Holstein, Environmental Branch Chief
510-286-6371
Office of Local Assistance
Caltrans, District 4
Oakland, California

For individuals with sensory disabilities, this document is available in Braille, large print, on audiocassette, or computer disk. To obtain a copy in one of these alternate formats, please call or write to Caltrans, Attn: Local Assistance, District 4, 111 Grand Avenue, Oakland, California 94623; (510) 286-6371 Voice, or use the California Relay Service (800) 735-2929 (TTY), (800) 735-2929 (Voice) or 711.

This page intentionally left blank

Summary

Purpose and Need.

Caltrans determined that Canyon Road Bridge over San Anselmo Creek, in Fairfax needs preventative maintenance work. The purpose of conducting the repair work is to extend the life of the bridge.

Project Description

Canyon Road Bridge is one of three bridges included in the Fairfax BPMP Project. This NES only addresses Canyon Road Bridge. The other two bridges are covered by separate NES documents. Canyon Road Bridge is a single-span precast voided slab concrete superstructure constructed in 1996 on two abutments remaining from a previous bridge over San Anselmo Creek at this location. This bridge is in a strictly residential area of the town of Fairfax leading to Cascade Drive, a major thoroughfare.

The proposed Canyon Road Bridge BPMP repairs would consist of:

- Replacing the existing northwest wingwall. Currently, the wall is made up of a bulging stack of solidified concrete sacks. A cluster of old redwood trees behind the wingwall is causing the wingwall to bulge, making it a hazard. The stacked concrete sacks would be removed while protecting the redwood trees. The new vertical wingwall would be reinforced concrete, tied in with soil nails, and supported by a footing. A recessed course of rock riprap with geotextile lining would be placed in front of the foundation of the wall to protect the footing from scour. Natural substrate (similar to the nearby stream channel) would be placed on top of the rock riprap. The final grade will be flush with the creek bed. A new cable railing would be installed on top of the wall for fall protection.

- Repair of the structural damage to the north abutment. To prevent further deterioration of this bridge's structural support, this work would consist of manually removing approximately two inches of the concrete from the surface of the abutment wall, exposing the rebar grid behind the surface and cleaning the reinforcement. Then, the reinforcement grid in the wall would be covered with a new two-inch layer of special grout and finished smoothly.

- Repair of the northeast bridge wingwall. The short existing northeast wingwall on the right side of the above abutment would be removed and replaced with an extended wall to envelope an existing storm drain pipe daylighting adjacent to the bridge. The new wingwall would be doweled into the abutment wall and angled into the creek bank, avoiding any intrusion into the current hydraulic space. The wingwall extension would be fortified with a couple of soil nails into the exiting bank and have a short triangular footing in front, the top of which would be flush with the creek bed, joining with the existing invert slab. The downstream edge of the wall would be protected from erosion with a 2' wide by 2' deep course of rock riprap buried into the creek bank and flush with the exposed slope. A new cable railing would be installed on top of the wall for fall protection.

- Sealing the cracks in the bridge deck. This would be done with methacrylate. No polyester concrete would be used here. Since this is a one-lane bridge and it would be closed (after heavy traffic hours at night) for the sealing of its deck for a few hours.

This proposed project also includes installation of two Narrow Bridge signs, one at each approach to the bridge and replacing wooden approach railings with metal beam guard railings. The work is expected to take fifteen working days from start to finish.

Habitat Impacts

The proposed project will temporarily impact 55 square feet (<0.01 acre) of Intermittent Stream ("other waters") and 11 square feet (<0.01 acre) of Ruderal Disturbed/Developed lands. It will permanently impact 121 square feet (<0.01 acre) of Ruderal Disturbed/Developed lands.

Special-Status Species

The project will not adversely affect special-status plants, breeding birds, or other non-fish wildlife species. However, it **may affect, but is not likely to adversely affect** northern spotted owl (NSO), Central California Coast (CCC) steelhead, designated critical habitat for CCC steelhead and Coho salmon, and Pacific Salmonid Essential Fish Habitat (EFH). Both NSO and CCC steelhead are federally threatened species, and NSO is state listed as threatened. Consultation with United States Fish and Wildlife Service (USFWS) will be required to assess impacts of the project and avoidance and minimization measures, such as work windows, to be implemented to reduce impacts to NSO. A letter requesting a Consistency Determination is also recommended for NSO consultation with California Department of Fish and Wildlife (CDFW). Consultation with National Marine Fisheries Service (NMFS) will be required to assess impacts of the project as well as avoidance and minimization measures to be implemented to reduce impacts on steelhead, designated critical habitat for steelhead and Coho salmon, and Pacific Salmonid EFH. This segment of San Anselmo Creek is anticipated to be dry during all work.

No nesting habitat is present for NSO within the BSA; however, NSO is known to nest within 0.25 mile of the BSA. No trees are to be removed and no direct effects are anticipated from the proposed Project. Construction activities are recommended to occur outside of the NSO nesting season (February 1 through August 31) to avoid acoustic disturbances to nesting NSO. If work within the nesting season cannot be avoided, protocol-level surveys will be conducted to determine nesting status, and if nesting is confirmed within 0.25 mile of project activities, no work will be conducted until August 31. The proposed Project is not anticipated to result in adverse effects to NSO through implementation of work windows or avoidance and minimization measures determined through consultation with USFWS. Therefore, the proposed Project may affect, but is not likely to adversely affect NSO.

Project construction will result in temporary impacts to critical habitat and EFH; however, no permanent adverse impacts are anticipated to critical habitat or EFH. The project is scheduled to occur when the BSA is dry. The bridge work will repair wingwalls and existing structures but will not decrease the amount of creekbed, create a barrier across the channel, decrease flows, or change substrate size. A minor loss of creek bank will occur from extension of the northwest wingwall; however, it is not anticipated to result in a detectable change in flows. The existing fish ladder in the BSA will remain in place and not be changed. The stream channel and banks will be restored to near pre-project conditions following the completion of bridge work including restoring the current gradient. Restoration will use the excavated cobble and gravel substrate to mimic the channel conditions prior to excavation including creek gradient. As such, the project will not change fish passage conditions. The project will be scheduled when the BSA is dry; therefore, no fish will be present, and no direct or temporary impacts to steelhead are anticipated during project activities. Although temporary impacts will occur to critical

habitat and EFH, the proposed Project is not anticipated to result in an adverse impact to critical habitat or EFH because fish passage conditions will remain unchanged and the BSA does not contain spawning or rearing habitat.

Invasive Species

The invasive plant species found in the BSA are English ivy (*Hedera helix*), French broom (*Genista monspessulana*), and Himalayan blackberry (*Rubus armeniacus*). The project will remove individuals of these species in areas where the vegetation is disturbed by construction activities.

New Zealand mud snail (NZMS; *Potamopyrgus antipodarum*) are documented within San Anselmo Creek. Measures such a washing equipment are included here to avoid the spread of the mud snail. With implementation of the avoidance and minimization efforts discussed in this text, the proposed project would not result in the spread of invasive species.

Resource Permits

There will be impacts to the Intermittent Stream (i.e. “other waters” or ‘Waters’). A preliminary Jurisdictional Determination will be submitted to the United States Army Corps of Engineers (USACE) for verification. Permits that will be required include a California Department of Fish and Wildlife (CDFW) Streambed Alteration Agreement (CFGC 1602), Regional Water Quality Control Board (RWQCB) Clean Water Act (CWA) 401 certification, and USACE CWA 404 nationwide permit. In May 2016, CDFW and RWQCB indicated that depending on level of impacts, compensatory mitigation may be necessary.

This page intentionally left blank

Table of Contents

Summary.....i
Chapter 1 – Introduction.....1
Chapter 2 – Study Methods.....7
Regulatory Requirements.....8
Wetland and Waters.....8
Invasive Species.....9
Protected Species.....10
Local Policies and Ordinances.....11
Studies Required.....12
Personnel and Survey Dates.....14
Agency Coordination and Professional Contacts.....14
Limitations That May Influence Results.....14
Chapter 3 – Results: Environmental Setting.....15
Existing Biological and Physical Conditions.....15
Biological Study Area.....15
Physical Conditions.....15
Biological Conditions in the BSA.....16
Invasive Species.....19
Regional Species and Habitats and Natural Communities of Concern.....19
Chapter 4 – Results: Biological Resources, Discussion of Impacts and Mitigation.....57
Habitats and Natural Communities of Special Concern.....57
Riparian Redwood Forest.....61
Intermittent Stream (“Other Waters”).....62
Special-Status Plant Species.....64
Special-Status Wildlife Species.....69
Northern spotted owl.....70
Steelhead, Critical Habitat, EFH, and Fish Passage.....74
Special-Status and non-Special-Status Nesting Birds.....76
Chapter 5 – Conclusions and Regulatory Determinations.....79
Federal Endangered Species Act Consultation Summary.....79
Essential Fish Habitat Consultation Summary.....79
California Endangered Species Act Consultation Summary.....79
Wetlands and Other Waters Coordination Summary.....79
Invasive Species.....80
Other.....80
Chapter 6 – References.....81

List of Figures

Figure 1. Biological Study Area Location Map 3
Figure 2. Proposed Bridge Plan 5
Figure 3a. Biological Communities within the Biological Study Area.....17
Figure 3b. Biological Communities Impacted within the Biological Study Area 59
Figure 4. Special-Status Plant Species within 8 kilometers (5 miles) of the Biological Study Area 65
Figure 5. Special-Status Wildlife Species within 8 kilometers (5 miles) of the Biological Study Area 67

List of Tables

Table 1: Listed, Proposed Species, and Critical Habitat Potentially Occurring or Known to Occur in the BSA.....21
Table 2: Direct Impacts of the Proposed Project to Natural Communities of Special Concern. 57
Table 3: Direct Impacts of the Proposed Project to Jurisdictional Areas by Agency.....57
Table 4. Acoustic disturbance analysis for NSO as per USFWS (2006) 72
Table 5. Estimated harassment distance due to elevated action-generated sound levels for proposed actions affecting NSO, by sound level (USFWS 2006) 72

List of Appendices

Appendix A – Plant and Wildlife Species Observed during the Site Visits
Appendix B – USFWS Official Species List
Appendix C – Preparers Qualifications

Chapter 1 – Introduction

Purpose and Need

Caltrans determined that Canyon Road Bridge, in the Town of Fairfax (Town) over San Anselmo Creek needs preventative maintenance work (discussed below). The purpose of conducting the repair work is to extend the life of the bridge.

Background on Proposed Fairfax BPMP (Multi-bridge) Project

The entire Fairfax BPMP (Multi-bridge) Project consists of three existing bridges proposed to undergo preventive maintenance repairs through the HBP's Bridge Preventive Maintenance Program (BPMP). Two of the bridges, on Marin Road and Spruce Road, are within a few blocks of each other, while the third creek crossing, Canyon Road Bridge, is approximately 2.35 miles away from the other two. This NES addresses Canyon Road Bridge. The other two bridges have separate NES documents.

For bridges that require work in the creek, it would be done during the dry season and the environmentally permissible window when these segments of the waterway are at their lowest flow rates and/or dry. If water is present, the work area would be dewatered by temporarily diverting any potential flows from the work area, using means such as short dams made with sand bags, and/or longitudinal piping to bypass the work areas. Stagnant water would be pumped out to create a completely dry work area. Best Management Practice (BMP) measures and a Water Quality Protection Plan would be implemented throughout the work period. Old debris and drift would be removed from the waterway. Water quality and turbidity would be controlled by the contractor and periodic tests required by the permits would be performed.

No trees would be cut for the construction operations. However, limited trimming and cutting of vegetation around the worksite, as well as clearing and grubbing, are expected. For application of methacrylate, the contractor would be required to conform to the recommendations of a certified industrial hygienist for safe worksite operations. Hours of operations would be limited to regular daylight work hours, but at least one nighttime operation may be expected.

Most of the various construction equipment used at the three sites would be relatively compact, including air compressors, generators, a shot blaster, shotcrete pumps and hoses, concrete saws, concrete chipping guns and drills, and soil drilling equipment. Construction vehicles moving in and out of the construction area would be a small loader, such as a Bobcat with backhoe or bucket attachments, polyester concrete mix truck, paver, roller, small excavator, a cold planing machine, snooper lift truck, utility pickup trucks, flatbed trucks, dump trucks, dump trailers, a truck-mounted crane, concrete delivery trucks and a testing van. These vehicles and equipment would not be all at the site at the same time but move in and out, and would be staged within the APEs, as needed. No new easement or temporary or permanent right-of-way (ROW) would be necessary. Also, no utility relocations would be necessary for the work on any of the three bridges. All access to the project and staging areas would be via the areas within the APEs. Equipment, large or small, would be lowered onto the creek bed with a truck-mounted crane to avoid ramping from the top to the creek bed for vehicles. Work would be taking place both from the bridge topside as well as down below in the creek at two locations (Marin and Canyon). The operations would be done manually, as well as

with power equipment. Rocks for riprap would also be lowered one by one onto the needed areas with a crane.

Project Description for Canyon Road Bridge

As mentioned above Canyon Road Bridge is one of three bridges included in the proposed Fairfax BPMP Project. This NES only addresses Canyon Road Bridge. The other two bridges are covered by separate NES documents. The Canyon Road Bridge is a single-span precast voided slab concrete superstructure constructed in 1996 on two abutments remaining from a previous bridge at this location over San Anselmo Creek. This bridge is in a strictly residential area of the town of Fairfax leading to Cascade Drive, a major thoroughfare. The structure is approximately 30 feet long and a little over 15 feet wide. It supports a single lane of traffic and railings nearly 15 feet above the creek bed and has no sidewalks on it. Two sheets of as-built plans are available for the 1996 deck replacement project, but none are available for the original abutment supports in the creek. A new General Plan (GP) based on field measurements has been developed for the bridge. The bridge has a Sufficiency Rating (SR) of 72.8 and is flagged as Functionally Obsolete (FO) by Caltrans in the latest Bridge Inspection Report (BIR) (2014) due to its narrow width. However, the narrow width is due to the Town's decision to construct the new deck for a single lane bridge and the bridge should not be considered as FO for this reason. The bridge is not eligible for NRHP listing.

There is an elaborate concrete fish ladder that begins just upstream of the bridge and ends just downstream of it. It consists of a concrete invert on top of the creek bed covering the creek bed from abutment to abutment, and a depressed rectangular fish ladder structure in the middle having steel guides. The Canyon Road Bridge Biological Study Area (BSA) is shown in Figure 1. The plans are provided in Figure 2.

The proposed Canyon Road Bridge BPMP repairs would consist of:

<u>Replacing the existing northwest wingwall</u>. Currently, the wall is made up of a bulging stacks of solidified concrete sacks. A cluster of old redwood trees behind the wingwall is causing the wingwall to bulge, making its collapse a real hazard. The stacked concrete sacks would be removed manually one by one and hauled away. The redwood tree cluster would be exposed thus and protected in place during the construction operations. The new vertical wingwall would be an approximately 15 feet long by seven to eight feet tall reinforced concrete wall, located a short distance in front of the redwood cluster and connected to the left edge of the existing bridge abutment. It would also be held back to the soil behind it with several soil nails going through the trunks and/or roots of the redwood trees. An arborist has determined no real harm would come to the trees from the drilling or operations. The new wingwall surface would come to the edge of the existing concrete fish ladder and would have a vertical expansion joint in it to allow the tree trunk to grow outwardly. Approximately a 9-foot segment of the wall would have a footing, protruding three feet away from the face of the wall. Excavation at the edge of the creek for the wingwall and its footing would be done manually as well as with small power equipment lowered from the top. The surface of the new wingwall would be flush and in line with the existing abutment wall in order not to protrude into the waterway and impact flows or flow capacity. The space behind the wingwall, housing the redwood tree roots and base, would be backfilled with soil. A new cable railing would be installed on top of the wall for fall protection. A recessed 2' wide by 2' deep course of rock riprap

Figure 1. Biological Study Area Location Map

N
W E
S

Bridge Preventative Maintenance Program
Canyon Road Bridge NES
Marin County, California

0 2,000 4,000
Feet

wra
ENVIRONMENTAL CONSULTANTS

Map Prepared Date: 3/29/2016
Map Prepared By: dchan
Base Source: Esri Streaming - NAIP 2014
Data Source(s): WRA

Path: L:\Acad 2000 Files\22000\22304\GIS\ArcMap\BPMP\Canyon Road Bridge\Fig1_Canyon_LocMap_20160329.mxd

This page intentionally left blank

Figure 2. Proposed Canyon Road Bridge General Plan

DIST	COUNTY	ROUTE	POST MILES TOTAL PROJECT	SHEET NO.	TOTAL SHEETS
04	Mrn				XX

REGISTERED CIVIL ENGINEER

PLANS APPROVAL DATE

REGISTERED PROFESSIONAL ENGINEER — NADER TAMANNAIE — NO. 37289 — EXP. 6/30/16 — CIVIL — STATE OF CALIFORNIA

930 ALHAMBRA BLVD. SUITE 220
SACRAMENTO, CA 95816

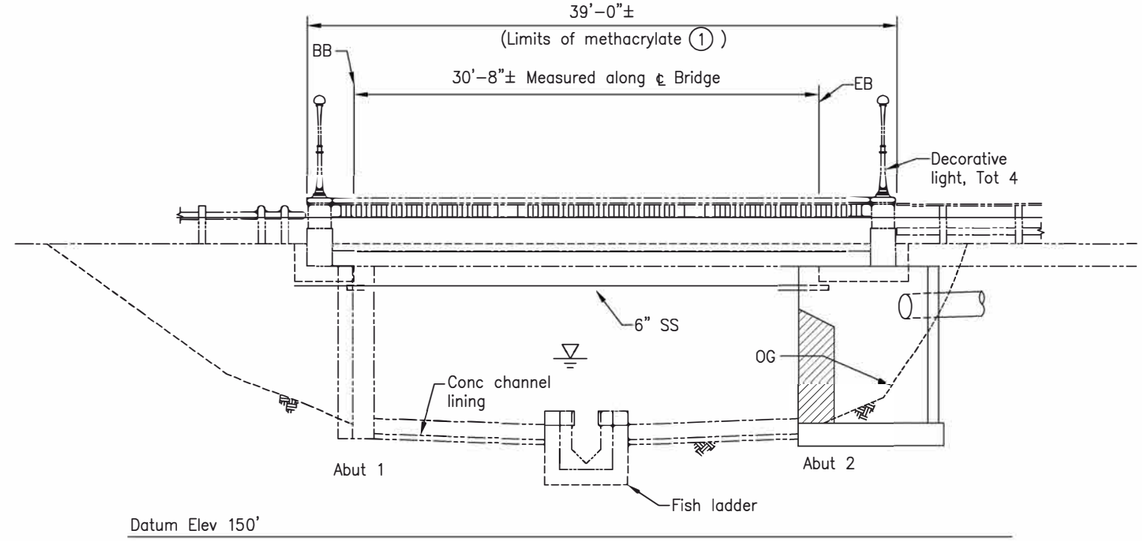

ELEVATION
1" = 5'–0"

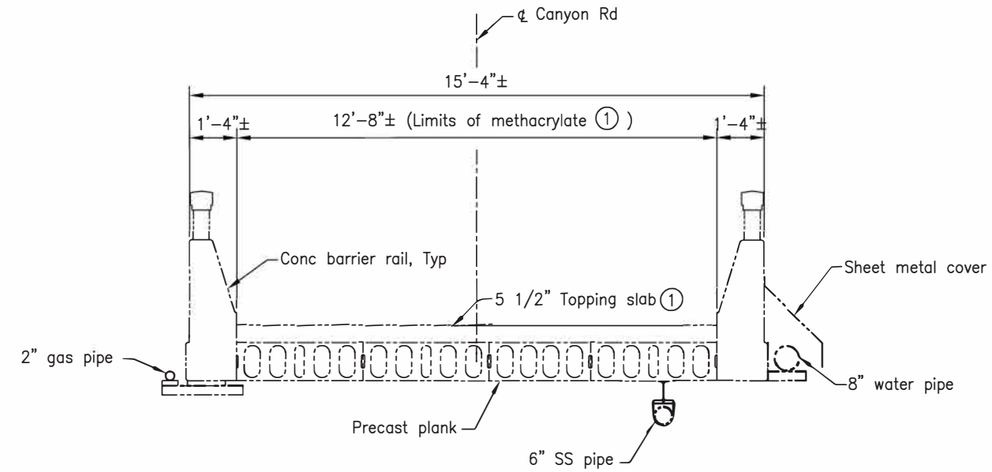

TYPICAL SECTION
1/2" = 1'–0"

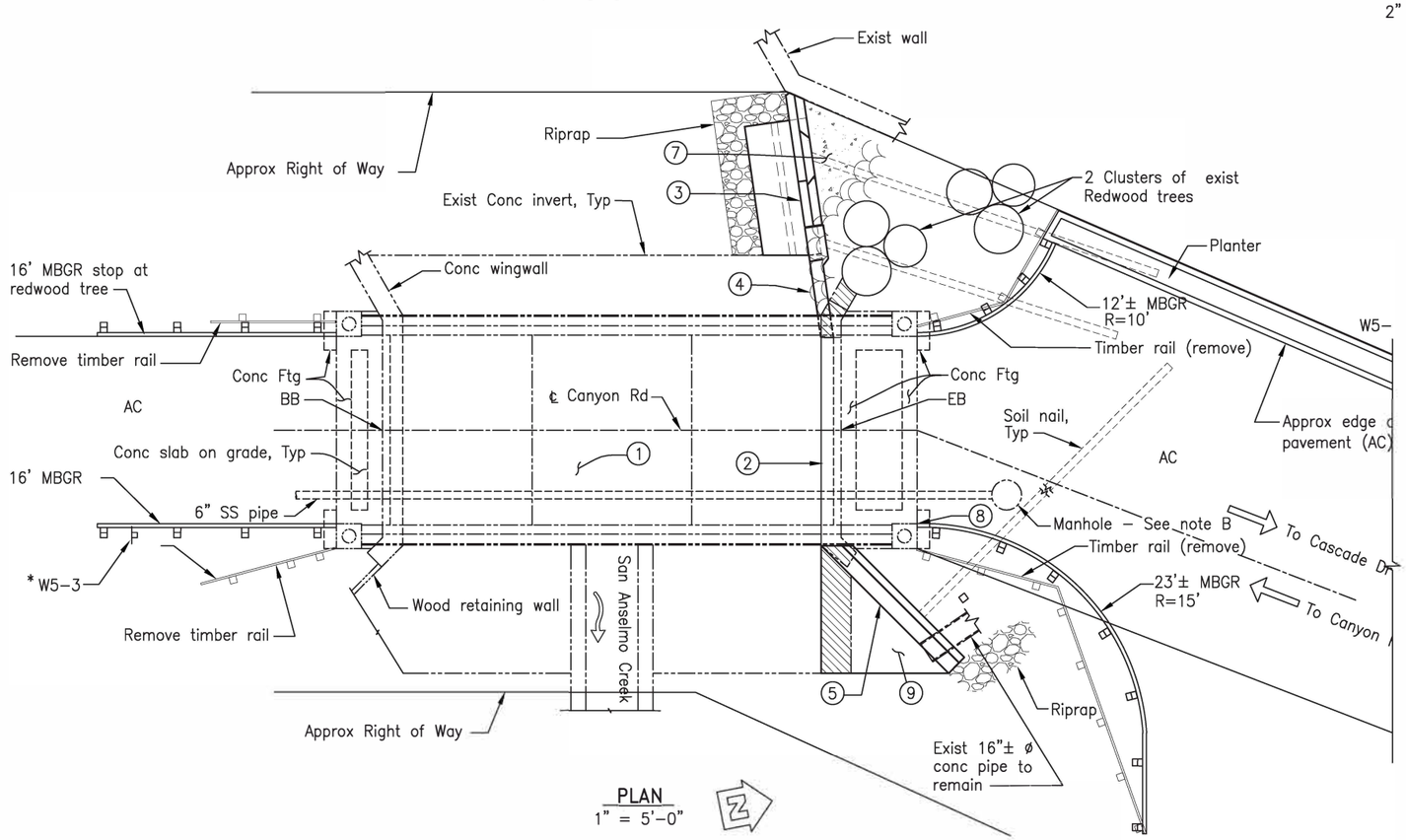

PLAN
1" = 5'–0"

NOTES

1. Clean deck and seal entire surface with methacrylate
2. Repair concrete surface at abutments.
3. New conc wall with soil nails in front of trees
4. Remove all exist conc bags
5. New "L" shaped conc wall with soil nails
6. Remove partial exist conc wingwall/Abut for new wall
7. Soil backfill (lightly compacted)
8. Repair spall at rail post
9. Extend conc invert to new wall as shown

NOTE

Contractor to post bridge closure signs one week prior to methacrylate application. During the closure time the bridge must open for emergency vehicles by covering bridge deck surface with plywood.

LEGEND

- Indicates existing structure
- Indicates new structure
- Indicates direction of travel
- Indicates direction of flow
- Denotes limits of conc removal

NOTES:

A. Bridge As–built drawing shown is approximate re–creation of existing configurations. The contractor shall verify all controlling field dimensions before ordering or fabricating any material.

B. Adjust the alignement of soil nail to clear manhole by 1' laterally.

* Denotes sign code. See "Signage & Traffic Detour Plans"

DESIGN OVERSIGHT	DESIGN	BY N. Tamannaie	CHECKED	LOAD & RESISTANCE FACTOR DESIGN	LIVE LOADING: HL93 AND PERMIT DESIGN VEHICLE	
	DETAILS	BY J. Caravalho	CHECKED	LAYOUT	BY N. Tamannaie	CHECKED
SIGNOFF DATE	QUANTITIES	BY	CHECKED	SPECIFICATIONS	BY	PLANS AND SPECS COMPARED

PREPARED FOR THE TOWN OF FAIRFAX DEPARTMENT OF PUBLIC WORKS

Nader Tamannaie, PE
PROJECT ENGINEER

BRIDGE No. 27C–0144
POST MILE ––

CANYON ROAD BRIDGE (BPMP)

GENERAL PLAN

DS OSD 2138 (CADD 4/89)

ORIGINAL SCALE IN INCHES FOR REDUCED PLANS 0 1 2 3

CU
EA
CONTRACT NO.

DISREGARD PRINTS BEARING EARLIER REVISION DATES

REVISION DATES (PRELIMINARY STAGE ONLY)

SHEET 8 OF

This page intentionally left blank

with geotextile lining would be placed in front of the foundation of the wall to protect the footing from scour. Six inches of natural substrate (such as cobble) that is similar to the nearby stream channel would be placed on top of the rock riprap. The final grade will be flush with the creek bed.

Repair of the structural damage to the north abutment. To prevent the further deterioration of this bridge structural support, this work would consist of manually removing approximately two inches of the concrete on the surface of the north abutment wall, exposing the rebar grid behind the surface and cleaning the reinforcement. The concrete and dust from chipping and grinding the concrete surface would be captured and hauled away. Next, the reinforcement grid in the wall would be covered with a new two-inch layer of special grout and finished smoothly.

Repair of the northeast bridge wingwall. The short existing northeast wingwall on the right side of the above abutment would be removed and replaced with an extended wall to envelope an existing storm drain pipe daylighting adjacent to the bridge. The pipe discharge is eroding the creek bank next to the bridge. The new wingwall would be doweled into the abutment wall and angled into the creek bank, avoiding any intrusion into the current hydraulic space. The wingwall extension would be fortified with a couple of soil nails into the exiting bank. This wall would also have a short triangular footing in front, the top of which would be flush with the creek bed, joining with the existing invert slab. The downstream edge of the wall would be protected from erosion with a 2' wide by 2' deep course of rock riprap buried into the creek bank and flush with the exposed slope. A new cable railing would be installed on top of the wall for fall protection.

Sealing the cracks in the bridge deck. This would be done with methacrylate. No polyester concrete would be used here. Since this is a one-lane bridge and it would be closed (after heavy traffic hours at night) for the sealing of its deck for a few hours, two measures to meet the needs of the residents would be implemented. First, a first-response crew and vehicle from Fairfax Fire Department would be positioned on the south end of the bridge for emergency situations. Secondly, the bridge would be opened for crossing by covering the sealing agent with plywood if an emergency crossing would be needed during the short duration of bridge closure. Prior notifications would be sent to the neighborhood.

This proposed project includes installation of two Narrow Bridge signs, one at each approach to the bridge a short distance away. Also, the existing wooden approach railings at all four corners of the bridge would be replaced with metal beam guard railings.

An Area of Potential Effects (APE) drawing and a preliminary Bridge General Plan for the repairs have been developed for this bridge. The work would be at both the deck and below deck levels and is expected to take as many as fifteen working days from start to finish.

Chapter 2 – Study Methods

The Town's consultants, Micki Kelly, PWS, plant ecologist of Kelly Biological Consulting and WRA fish and wildlife biologists Dan Chase and Nick Brinton conducted biological resources studies in the Spring/Summer of 2015 and Spring 2016 including a biological resources assessment, special-status plant surveys, and a delineation of Section 404 jurisdictional areas within the proposed Canyon Road Bridge BPMP Project BSA in the Town of Fairfax, Marin County, California (Figure 1). The BSA was examined on foot to determine (1) vegetation communities present, (2) if existing conditions provide suitable

habitat for any special-status plant or wildlife species that have a potential to occur within the vicinity of the BSA, and (3) the presence of potential jurisdictional wetlands and "other waters" within the BSA. The BSA and impact areas are shown in Figures 3a and 3b. The special-status species that are known to occur in the vicinity of the BSA are listed in Table 1 and mapped in Figures 4 and 5 (CDFW 2017a). The regulatory framework under which the assessment was conducted and the methods used to conduct the assessment are described in the following section.

Regulatory Requirements

National Environmental Policy Act

The National Environmental Policy Act (NEPA) of 1969 provides a framework which federal agencies must follow in evaluating environmental impacts of their actions. Actions by federal agencies must "use all practicable means and measures" to avoid or lessen impacts to the environment. In 2007, formal guidance for the continuation of a pilot program was issued which allows Caltrans to assume all of the Federal Highway Administration (FHWA) environmental responsibilities under NEPA and other environmental laws (NEPA Delegation). This delegation authority is limited to highway projects, including Local Assistance Federal Aid projects, and specific projects within the State or a programmatic delegation. Therefore, Caltrans must ensure joint projects with FHWA or projects funded with Federal Aid are in compliance with NEPA.

WETLAND AND WATERS

Section 10 of Rivers and Harbors Act of 1899

The Rivers and Harbors Act requires permits in navigable waters of the U.S. for all structures such as riprap and activities such as dredging. The term navigable waters of the United States and all other terms relating to the geographic scope of jurisdiction are defined at 33 CFR part 329. Generally, they are those waters of the United States that are subject to the ebb and flow of the tide shoreward to the mean high water mark, and/or are presently used, or have been used in the past, or may be susceptible to use to transport interstate or foreign commerce. The United States Army Corps of Engineers (USACE) grants or denies permits based on the effects on navigation. San Anselmo Creek is a tributary to Corte Madera Creek, which is only considered navigable below the College of Marin, approximately 4 miles downstream of the site. (http://www.spn.usace.army.mil). Therefore, this creek is not considered a navigable water subject to the Rivers and Harbors Act.

Clean Water Act (CWA)

The CWA provides guidance for the restoration and maintenance of the chemical, physical, and biological integrity of the nation's waters. Section 404 identifies the United States Army Corps of Engineers (USACE) jurisdiction over fill materials in essentially all water bodies, including wetlands. All federal agencies are required to avoid impacts to wetlands whenever there is a practicable alternative. Section 404 established a permit program administered by USACE regulating the discharge of dredged or fill material into Waters of the US (including wetlands).

Section 401of the CWA requires that an applicant for a federal license or permit that allows activities resulting in a discharge to Waters of the U.S., obtain a state certification that the discharge complies with other provisions of CWA. The Regional Water Quality

Boards (RWQCB) administers the certification program in California. The guidelines allow the discharge of dredged or fill material into the aquatic system only if there is no practicable alternative that would have less adverse impacts.

Executive Order 11990 – Protection of Wetlands

This order established a national policy to avoid adverse impacts to wetlands whenever there is a practicable alternative. The U. S. Department of Transportation (DOT) promulgated DOT Order 5660.1A in 1978 to comply with this direction. On federally funded projects, impacts to wetlands must be identified. Alternatives that avoid wetlands must be considered. If wetland impacts cannot be avoided, then all practicable measures to minimize harm must be included. This must be documented in a specific Wetlands Only Practicable Alternative Finding. An additional requirement is to provide early public involvement in projects affecting wetlands. FHWA provides technical assistance (Technical Advisory 6640.8A) and reviews environmental documents for compliance.

California Porter-Cologne Water Quality Control Act

This regulatory law is becoming more prominent on projects involving impacts to isolated Waters of the State (non-404/401 waters). The RWQCB is increasingly requiring Waste Discharge Requirement (WDR) permits for impacts to Waters of the State.

Streams, Lakes, and Riparian Habitat in California

Streams and lakes, as habitat for fish and wildlife species, are subject to the jurisdiction of California Department of Fish and Wildlife (CDFW) under Sections 1600-1616 of California Fish and Game Code. Alterations to, or work within or adjacent to streambeds or lakes, generally require a 1600 series Lake and Streambed Alteration Agreement. The term “stream”, which includes creeks and rivers, is defined in the California Code of Regulations (CCR) as “a body of water that flows at least periodically or intermittently through a bed or channel having banks and supports fish or other aquatic life [including] watercourses having a surface or subsurface flow that supports or has supported riparian vegetation” (14 CCR 1.72). In addition, the term “stream” can include ephemeral streams, dry washes, watercourses with subsurface flows, canals, aqueducts, irrigation ditches, and other means of water conveyance if they support aquatic life, riparian vegetation, or stream-dependent terrestrial wildlife (CDFG 1994). “Riparian” is defined as “on, or pertaining to, the banks of a stream.” Riparian vegetation is defined as “vegetation which occurs in and/or adjacent to a stream and is dependent on, and occurs because of, the stream itself” (CDFG 1994). Removal of riparian vegetation also requires a Lake and Streambed Alteration Agreement from CDFW.

INVASIVE SPECIES

Executive Order 13112 – Invasive Species

On February 3, 1999, President William J. Clinton signed Executive Order (EO) 13112 requiring federal agencies to combat the introduction or spread of invasive species in the United States. The order defines invasive species as “any species, including its seeds, eggs, spores, or other biological material capable of propagating that species, that is not native to that ecosystem whose introduction does or is likely to cause economic or environmental harm or harm to human health." Federal Highway Administration (FHWA) guidance issued August 10, 1999 directs the use of the State’s invasive species list,

maintained by the California Invasive Species Council (Cal-IPC 2015) to define the invasive plants that must be considered as part of the National Environmental Policy Act (NEPA) analysis for a proposed project. Under the EO, federal agencies cannot authorize, fund, or carry out actions that it believes are likely to cause or promote the introduction or spread of invasive species in the United States or elsewhere unless all reasonable measures to minimize risk of harm have been analyzed and considered.

PROTECTED SPECIES

Special-Status Species

Special-status species include those plants and wildlife species that have been formally listed, are proposed as endangered or threatened, or are candidates for such listing under the federal Endangered Species Act or California Endangered Species Act. These acts afford protection to both listed and proposed species. In addition, California Department of Fish and Wildlife Species of Special Concern, which are species that face extirpation in California if current population and habitat trends continue, U.S. Fish and Wildlife Service (USFWS) Birds of Conservation Concern, and CDFW special-status invertebrates are all considered special-status species. Although CDFW Species of Special Concern generally have no special legal status, they are given special consideration under the California Environmental Quality Act (CEQA). Plant species on the California Native Plant Society (CNPS) Rare and Endangered Plant Inventory with California Rare Plant Rank of 1 or 2 are also considered special-status plant species and must be considered under CEQA. Rank 3 and Rank 4 species are afforded little or no protection under CEQA.

Federal Endangered Species Act

The Endangered Species Act (ESA) of 1973, as amended (16 USC 1531 et seq.), was enacted to provide a means to identify and protect endangered and threatened species. Under Section 9 of the ESA, it is unlawful to take any listed species. “Take” is defined as harassing, harming, pursuing, hunting, shooting, wounding, killing, trapping, capturing, or collecting a listed species. “Harass” is defined as an intentional or negligent act or omission, which creates the likelihood of injury to wildlife by annoying it to such an extent as to significantly disrupt normal behavioral patterns, which include, but are not limited to, breeding, feeding, or sheltering. “Harm” is defined as an act which actually kills or injures fish or wildlife and may include significant habitat modification or degradation which actually kills or injures fish or wildlife by significantly impairing essential behavioral patterns, including breeding, spawning, rearing, migrating, feeding, or sheltering. Actions that may result in “take” of a federal-listed species are subject to USFWS or National Marine Fisheries Service (NMFS) permit issuance and monitoring. Section 7 of ESA requires federal agencies to ensure that any action authorized, funded, or carried out by the agency is not likely to jeopardize the continued existence of any endangered or threatened species or result in the destruction or adverse modification of designated critical habitat for such species. Any action authorized, funded, or carried out by a federal agency or designated proxy (e.g., Caltrans) which has potential to affect listed species requires consultation with the USFWS or the NMFS under Section 7 of the ESA.

Essential Fish Habitat

The Magnuson-Stevens Fishery Conservation and Management Act of 1976 was established to conserve and manage fishery resources found off the coast, as well as anadromous species and Continental Shelf fishery resources of the United States, by

exercising (A) sovereign rights for the purposes of exploring, exploiting, conserving, and managing all fish within the exclusive economic zone established by Presidential Proclamation 5030, dated March 10, 1983, and (B) exclusive fishery management authority beyond the exclusive economic zone over such anadromous species, Continental Shelf fishery resources, and fishery resources in special areas.

California Endangered Species Act

CDFW is responsible for administering California Endangered Species Act (CESA, CDFG Code §§2050, et seq.), which prohibits take of species that have been listed, or are considered for listing (candidate species) as threatened or endangered species within the State of California. CESA allows for incidental take of state listed species through issuance of an Incidental Take Permit, or through a Consistency Determination in coordination with a Biological Opinion issued by the USFWS (CDFW Code Section 2081). In contrast with federal law, the definition of “take” under CESA involves actual harm to one or more members of a listed species and does not extend to modification of habitat not involving direct take.

Migratory Bird Treaty Act

This treaty with Canada, Mexico and Japan makes it unlawful at any time, by any means or in any manner, to pursue, hunt, take, capture, or kill migratory birds. The law applies to the removal of nests (such as swallow nests on bridges) occupied by migratory birds during the breeding season. California Fish and Game Code (Sec 3500) also prohibits the destruction of any nest, egg, or nestling.

Other Sensitive Biological Communities

Other sensitive biological communities not discussed above include habitats that fulfill special functions or have special values. Natural communities considered sensitive are those identified in local or regional plans, policies, regulations, or by the CDFW. CDFW ranks sensitive communities as "threatened" or "very threatened" and keeps records of their occurrences in its California Natural Diversity Database (CNDDB; CDFW 2017a). Sensitive plant communities are also identified by CDFW. CNDDB vegetation alliances are ranked 1 through 5 based on NatureServe's (2010) methodology, with those alliances ranked globally (G) or statewide (S) as 1 through 3 considered sensitive. Impacts to sensitive natural communities identified in local or regional plans, policies, or regulations or those identified by the CDFW or USFWS must be considered and evaluated under CEQA (CCR Title 14, Div. 6, Chap. 3, Appendix G). Specific habitats may also be identified as sensitive in city or county general plans or ordinances.

LOCAL POLICIES AND ORDINANCES

Tree Protection Ordinance

In 1973, the Town of Fairfax approved Ordinance No. 387 for trees. The purpose of the ordinance is to preserve the wide variety of local native trees and to protect the benefits they provide the citizens. Chapter 8.36.020 of the Town Code defines "altering" and "tree." A Tree Permit is required for removal or significant trimming of any tree, which has a circumference of 24 inches or more measured at 24 inches above the ground. In effect, this is a little less than an 8-inch diameter tree trunk.

Studies Required

The Town's consultants, Kelly Biological Consulting and WRA conducted field studies in the entire BSA to determine the presence of wetlands and "other waters", and to evaluate the presence or potential presence of special-status species and sensitive habitats. Methods used during the site visits to make determinations for this NES are described below.

Special-Status Species

Prior to the field visits to the BSA, the following sources were reviewed to determine which special-status plant and wildlife species have been documented to occur in the vicinity of the BSA:

- California Natural Diversity Database (CNDDB) records for the Bolinas, Novato, Petaluma Point, Point Bonita, San Francisco North, San Geronimo, San Rafael, San Quentin U.S. Geological Service 7.5' Quadrangles (CDFW 2017a)
- USFWS Information for Planning and Conservation (IPaC) Species List (USFWS 2017)
- CNPS Inventory of Rare, Threatened, and Endangered Plants of California records for the Bolinas, Novato, Petaluma Point, Point Bonita, San Francisco North, San Geronimo, San Rafael, San Quentin U.S. Geological Service 7.5' Quadrangles (CNPS 2017)
- CDFW Spotted Owl Database (CDFW 2017b)
- CDFW California Wildlife Habitat Relationships Online Database (CDFW 2017c)
- CDFW Passage Assessment Database (CDFW 2017d)
- CDFW publication "California Amphibians and Reptile Species of Special Concern" (Thomson et al. 2016)
- CDFG publication "California Bird Species of Special Concern" (Shuford and Gardali 2008).
- University of California at Davis, Center for Watershed Sciences. Pisces: California Fish Data and Management Software (UC Davis 2017)
- NMFS Species List and Essential Fish Habitat Maps of California (NMFS 2017)
- The Marin County Breeding Bird Atlas (Shuford 1993)
- eBird online database (eBird 2017)
- Western Bat Working Group (WBWG) online species accounts (WBWG 2016)

Special-Status Species. During the March-May 2015 and March-June 2016 site visits, the Town's consultant Kelly Biological Consulting completed floristic surveys for special-status plant species with flowering periods that overlapped with the timing of the visits. All habitats with potential to support special-status plant species were traversed on foot, and all plant species observed and identifiable were recorded. For special-status wildlife species, WRA biologists completed a survey to determine the potential for the BSA to support special-status species, but the studies did not constitute protocol level surveys. Habitat conditions observed in the BSA during the site visits were used to evaluate the potential for presence of special-status species based on these literature searches and the professional expertise of the investigating biologists. Table 1 presents the evaluation of habitat potential for each special-status plant and wildlife species documented to occur in the vicinity of the BSA based on the literature database search. A list of all plant

and wildlife species observed during the site visit is provided in Appendix A. The USFWS official listing of special-status species with a potential to occur in the proposed project vicinity is provided in Appendix B.

Section 404 "Waters of the U.S." During the site visit, the BSA was evaluated for the presence of indicators of wetlands and "other waters". Section 328.3 of the Federal Code of Regulations defines wetlands as:

> *"Those areas that are inundated or saturated by surface or ground water at a frequency and duration sufficient to support, and that under normal circumstances do support, a prevalence of vegetation typically adapted for life in saturated soil conditions. Wetlands generally include swamps, marshes, bogs, and similar areas.*" EPA, 40 CFR 230.3 and CE, 33 CFR 328.3 (b)

The methods used to delineate potential jurisdictional wetlands and waters are based on the *U.S. Army Corps of Engineers Wetlands Delineation Manual* ("Corps Manual"; Environmental Laboratory 1987) and the *Regional Supplement to the Corps of Engineers Wetland Delineation Manual: Arid West Region (Version 2.0)* ("Arid West Supplement"; USACE 2008). The routine method for wetland delineation described in the Corps Manual was used to identify areas potentially subject to USACE Section 404 jurisdiction within the BSA.

The BSA was evaluated for the presence or absence of indicators of the three wetland parameters described in the Corps Manual and Arid West Supplement. The three parameters are the presence of: (1) hydrophytic vegetation, (2) wetland hydrology, and (3) hydric soils. According to the Corps Manual, for areas not considered "problem areas" or "atypical situations":

> *"... [E]vidence of a minimum of one positive wetland indicator from each parameter (hydrology, soil, and vegetation) must be found in order to make a positive wetland determination."*

This study also evaluated the presence of unvegetated "other waters" potentially subject to USACE jurisdiction under Section 404 of the Clean Water Act. Besides wetlands, other areas subject to Corps jurisdiction include lakes, rivers and streams in addition to all areas below the high tide line (HTL) in areas subject to tidal influence. No tidally influenced areas are present in the BSA. Jurisdiction in non-tidal areas extends to the ordinary high water (OHW) mark defined as:

> "*...that line on the shore established by the fluctuations of water and indicated by physical characteristics such as clear, natural line impresses on the bank, shelving, changes in the characteristics of the soil, destruction of terrestrial vegetation, the presence of litter and debris, or other appropriate means that consider the characteristics of the surrounding areas.*" Federal Register Vol. 51, No. 219, Part 328.3 (e). November 13, 1986.

Identification of the ordinary high water mark at this site followed the USACE Regulatory Guidance Letter No. 05-05, *Ordinary High Water Mark Identification* (USACE 2005), which provides a list of indicators, such as shelving, natural lines impressed on the bank, wrack lines, scour, and sediment deposition. These indicators were used to map the location of the ordinary high water mark for "other waters" in the BSA.

Vegetation Communities and Sensitive Habitats. Vegetation communities present in the BSA were classified based on existing plant community descriptions described in *A*

Manual of California Vegetation, 2nd Edition (Sawyer, J., T. Keeler-Wolf and J. Evens. 2009). However, in some cases it was necessary to identify variants of community types or to describe non-vegetated areas that are not described in the literature.

Biological communities were classified as sensitive or non-sensitive as defined by CEQA. Sensitive plant communities include habitats that fulfill special functions or have special values. Natural communities considered sensitive are those identified in local or regional plans, policies, regulations, or by CDFW. CDFW ranks sensitive communities as 'threatened' or 'very threatened' and keeps records of their occurrences in its CNDDB. Also, vegetation alliances are ranked 1 through 5 (Sawyer, J., T. Keeler-Wolf and J. Evens. 2009). Alliances ranked globally (G) or statewide (S) as 1 through 3 are considered sensitive. Impacts to sensitive natural communities identified in local or regional plans, policies, regulations, or by CDFW or USFWS must be considered and evaluated under CEQA.

Personnel and Survey Dates

The Town's consultant, Micki Kelly, Certified Professional Wetland Scientist and plant ecologist with 25 years of experience, conducted the wetland delineation on April 12, 2016 and special-status plant surveys on January 16 and March 16, 2015, as well as April 12 and June 23, 2016. WRA biologists Claire Woolf (wildlife biologist) as well as Daniel Chase and Nicholas Brinton (fisheries biologists) conducted the biological resource site visits on November 17, 2014, and March 15, 2016. Their qualifications are provided in Appendix C.

Agency Coordination and Professional Contacts

In a May 18, 2016 informal Marin Project Coordination interagency meeting, Ms. Kelly briefly introduced the concept of the Fairfax BPMP bridge project prior to finalize design plans. The CDFW and RWQCB indicated that depending on the level of impact, compensatory mitigation may be necessary. No other agency coordination has been done.

Limitations That May Influence Results

The region was in a multi-year drought, making conditions drier than normal during the spring of 2015 work. The wet season 2015-6 rainfall totals were slightly above normal (http://www.marinwater.org/300/Water-Watch). The site visits were conducted during daylight hours and consisted of an assessment of likely habitats for special-status plants and wildlife; it did not conform to specific USFWS or NMFS protocols for any species. No northern spotted owl (NSO; *Strix occidentalis caurina*) surveys or detailed fish studies were completed to identify and enumerate fish species present. Data and documents from previous studies in the area were relied upon to evaluate potential presence of fish species.

Chapter 3 – Results: Environmental Setting

This section describes the region in which the proposed project will occur. It is intended to explain context and the level of intensity of impacts. It includes a brief description of the area's topography, soils, habitat, watercourses, and level of human or natural disturbance.

Existing Biological and Physical Conditions

BIOLOGICAL STUDY AREA

The BSA is located on and around the Canyon Road Bridge over San Anselmo Creek in the Town of Fairfax, Marin County, California. Canyon Road is a local residential road. The BSA covers the areas where the proposed project-related direct or indirect actions such as ground-disturbing, construction, staging, or access activities would occur and goes beyond that to ensure that key biological issues are addressed. Canyon Road is a local road in a suburban developed area. The adjacent land use is residential (single family homes). The BSA extends up and downstream from the bridge along the stream corridor covering the primary natural area.

Site elevations range from approximately 100 to 200 feet NAVD88. Surrounding land use is primarily residential. The bridge is located on the San Rafael USGS 7.5-minute quadrangle map at latitude W37.975162, longitude N122.606451.

PHYSICAL CONDITIONS

Topography

Within the BSA the creek flows to the southeast. The steep banks are approximately 10 vertical feet (top of bank to channel) near the bridge and 20 vertical feet downstream of the fish ladder. Adjacent to the top of bank, lands are relatively flat. To the north and south of the BSA are ridges.

Hydrology

The principal natural hydrological sources for the BSA are creek flow, direct precipitation, and surface run-off from adjacent lands. West of the BSA (upstream), Cascade Creek joins San Anselmo Creek. San Anselmo Creek then flows though the BSA towards the southeast then turns to the northeast. In roughly 1.4 miles, it joins Fairfax Creek and turns east, eventually flowing into Corte Madera Creek, then San Francisco Bay, and the Pacific Ocean. At the bridge location the flow is intermittent. At the time of some of the fieldwork, there was no surface flow, though water was ponded in several pools below the fish ladder.

Soils

The soils that occur in the BSA are predominately Xerorthents-Urban land complex (0 to 9 percent slopes), with a small area of Tocaloma-McMullin complex, (50 to 75 percent slopes) to the south of the site (USDA NRCS 2017). The Tocaloma-McMullin-Urban land complex is a fine-loamy, mixed, mesic Typic Haploxeroll. Its drainage class is well drained.

BIOLOGICAL CONDITIONS IN THE BSA

Riparian Redwood Forest Association

The BSA consists of mature semi-closed canopy forest similar to Redwood Forest Alliance more specifically a subset of that know as the Redwood Forest Association (*Sequoia sempervirens-Acer macrophyllum-Umbellaria californica* Association (Sawyer, Keeler-Wolf, and Evans 2009). This habitat is somewhat common in the northern California Coast region in moist areas (Figure 3a). Within the BSA, the overstory species include native tree species such as redwood (*Sequoia sempervirens*), big-leaf maple (*Acer macrophyllum*), and California bay (*Umbellularia californica*). The understory is sparse. There are few shrubs. The herbaceous/vine layer is comprised mainly of English ivy (*Hedera helix*) and Himalayan blackberry (*Rubus armeniacus*), with some California polypody (*Polypodium californicum*), and scattered grasses and forbs including panic veldtgrass (*Ehrharta erecta*) and white ramping fumitory (*Fumaria capreolata*).

Intermittent Stream ("Other Waters")

At this location, San Anselmo Creek is an intermittent creek with flows that vary with the rainfall patterns of a given season. The watershed that supports it is local, generally the western part of the Town of Fairfax and adjacent open space lands. Flows within the creek during a March 2016 site visit extended to the edges of the creek bed. During site visit in April 2015 flows were minimal to absent. Though, there were a few remnant small pools that held water. In addition to slope change at the bed and bank junction, wrack observed at the edge of the creek bed was used as an indication of OHW mark. The creek substrate under the bridge (and immediately downstream of the bridge) consists of concrete and a metal fish ladder. The remaining areas upstream and downstream are a mix of small gravel to larger cobble. Downstream of the fish ladder are numerous chunks of concrete. The channel width at the OHW mark was used to determine the intermittent stream ("other waters") boundary shown on Figure 3a. The creek is not included on the National System of Wild and Scenic Rivers published by the U.S. Department of the Interior. There are no wetlands in the BSA. The banks under the bridge are concrete, just upstream of the bridge on the northwest side is a concrete sack retaining wall.

Ruderal Disturbed/Developed

The Ruderal Disturbed/Developed portion of the BSA includes pavement (Canyon Road and driveways), the gravel and bare dirt roadsides, structures (homes and outbuildings), backyards, landscaping or bare areas, and the concrete sack retaining wall on the northwest side of the bridge. In the areas that are not landscaped, the vegetation is predominately non-native species commonly found in the region, such as privet (*Ligustrum japonicum*), English ivy (*Hedera helix*), goosegrass (*Galium aparine*), cut leaf geranium (*Geranium dissectum*), and non-native grasses.

Wildlife Species in the BSA

The BSA is situated within riparian redwood forest, and wildlife species known to occur in the vicinity include Stellar's jay (*Cyanocitta stelleri*), western gray squirrel (*Sciurus griseus*), and chestnut-backed chickadee (*Poecile rufescens*). Additionally, the portion of San Anselmo Creek within the BSA is located above two partial fish passage barriers at Saunders Avenue and a flood control channel where Corte Madera Creek feeds into a larger slough. San Anselmo Creek is still considered anadromous because the barriers only deter passage during low flow portions of the year. Central California Coastal (CCC) steelhead (*Oncorhynchus mykiss*) is considered present within the watershed (UC Davis 2017, Leidy et al. 2005).

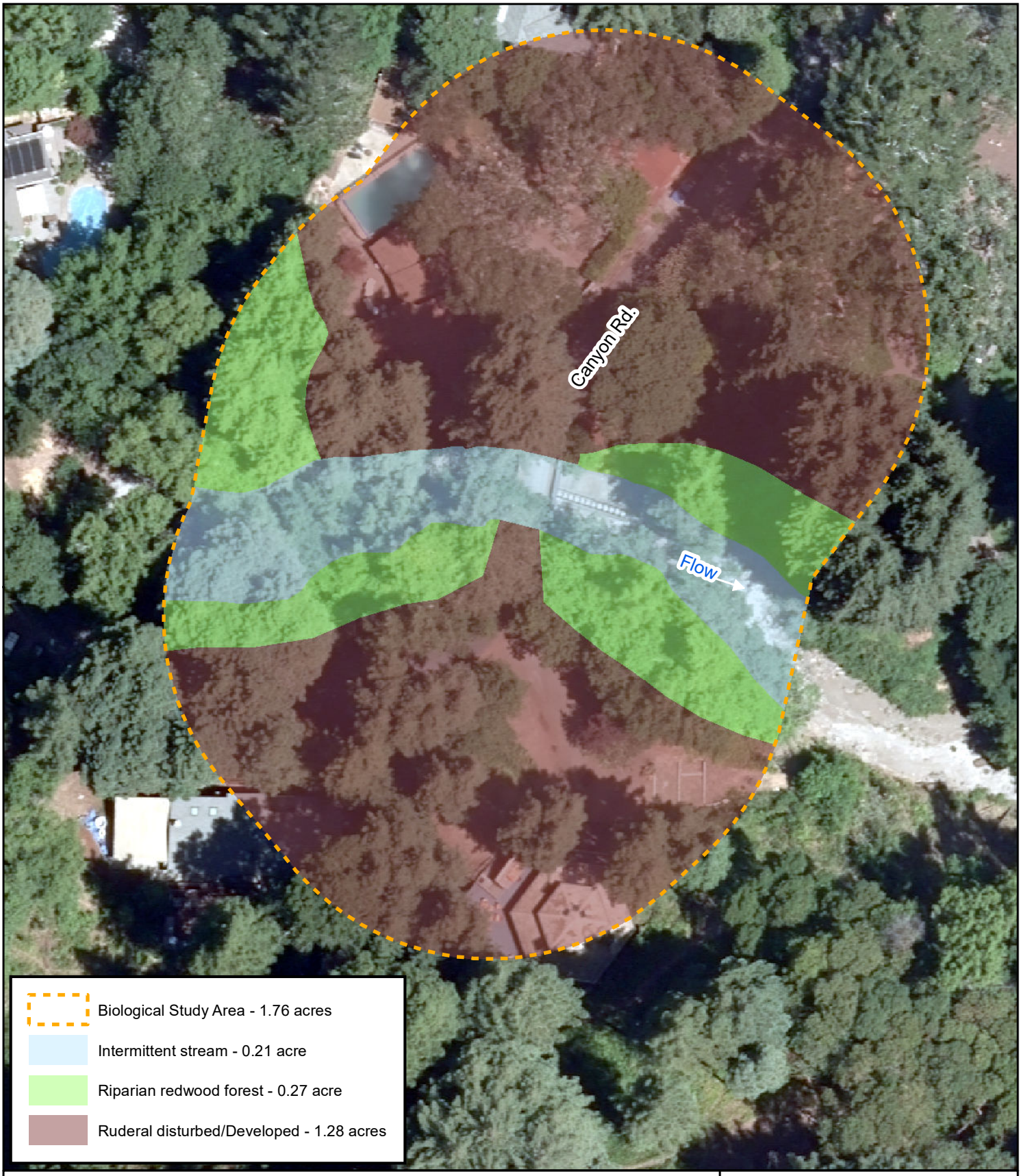

Figure 3a. Biological Communities within the Biological Study Area

N
W E
S

0 15 30 60
Feet

Bridge Preventative Maintenance Program
Canyon Road Bridge NES
Marin County, California

wra
ENVIRONMENTAL CONSULTANTS

Map Prepared Date: 5/15/2017
Map Prepared By: smortensen
Base Source: Esri Streaming - NAIP 2014
Data Source(s): WRA

Path: L:\Acad 2000 Files\22000\22304\GIS\ArcMap\BPMP\Canyon Road Bridge\2017\Fig3a_Canyon_BioComms.mxd

This page intentionally left blank

INVASIVE SPECIES

Federal Highway Administration guidance issued August 10, 1999, states that the State's invasive species list, maintained by the California Invasive Species Council be used to define the invasive plants. The California Invasive Plant Council (Cal-IPC) Inventory and CDFA maintain lists of invasive plant species. Cal-IPC list categorizes plants as High, Moderate, or Limited, reflecting the level of each species' negative ecological impact in California. Cal-IPC defines High as "species that have severe ecological impacts on physical processes, plant and animal communities, and vegetation structure. Their reproductive biology and other attributes are conducive to moderate to high rates of dispersal and establishment. Most are widely distributed ecologically." (Cal-IPC 2015). The species found in the BSA that are listed on the Cal-IPC list as High are English ivy (*Hedera helix*), French broom (*Genista monspessulana*), Himalayan blackberry, and pampus grass (*Cortaderia jubata*) Several species with moderate rating were also observed, big-leaf periwinkle (*Vinca major*), Italian thistle (*Carduus pycnocephalus*), and panic grass (*Ehrharta erecta*).

During construction the several French broom and Italian thistle individuals within the BSA and in or adjacent to the work area will be removed. The English ivy, Himalayan blackberry, and big-leaf periwinkle, panic grass will be more difficult to eradicate given that they are common outside the BSA in nearby areas and upstream. The proposed project will remove individuals of those species in areas where the vegetation is removed for construction activities, and stabilize the soil with appropriate erosion control measures, as needed.

New Zealand mud snail (NZMS; *Potamopyrgus antipodarum*) are documented within San Anselmo Creek. Construction equipment such as pumps, tanks, or heavy equipment which operates within an infested aquatic environment is at risk for spreading NZMS. Snails survive in pooled water in pumps and tanks or in mud which remains attached to equipment. To prevent the spread of NZMS, all construction equipment that comes into contact with a wetted channel will be thoroughly cleaned to remove all attached soil and all water within the compartments will be dried up. Pumps and tanks will be cleaned and must remain fully dried for 72 hours following cleaning before equipment may be used on another aquatic project. In addition, any measures required by the agencies will be implemented.

Regional Species and Habitats and Natural Communities of Concern

The species listed in the CDFW (2017a), CNPS (2017), NMFS (2017), and USFWS (2017) records search results are discussed in Table 1. The printout of the USFWS list can be found in Appendix B. Figures 4 and 5 show the documented occurrences for special-status plant and wildlife species (respectively) in the vicinity of the BSA based on the CNDDB (CDFW 2017a). A description of habitat requirements is provided for each special-status plant or wildlife species along with an evaluation of its potential to occur within the BSA. Potential for special-status species to occur in the BSA was determined according to the following criteria:

- Absent [A] - No habitat present and no further work needed.
- Habitat Present [HP] - Habitat is, or may be present. The species may be present.
- Present [P] - Species is present

- Critical Habitat [CH] - Proposed project footprint is located within a designated critical habitat unit, but does not necessarily mean that appropriate habitat is present.

Based on these results, it was determined that 77 special-status plant species and 91 special-status wildlife species have been documented from or have a range that occurs in the San Rafael, Bolinas, San Geronimo, Novato, Petaluma Point, San Quentin, San Francisco North, or Point Bonita 7.5-minute USGS quadrangles. Of these species, 22 special-status plant species and eight special-status wildlife species have documented occurrences within 5 kilometers (3 miles) of the BSA.

Due to a lack of appropriate habitat elements (such as coastal salt marsh) and the presence of residential development in the surrounding landscape, it was determined that the BSA has the potential to support only six of the special-status plant species identified in Table 1. No special-status plants were observed in the BSA during the site assessments conducted for this report.

The BSA is designated Critical Habitat for steelhead (*Oncorhynchus mykiss*), and the species is presumed present within this section of San Anselmo Creek (UC Davis 2017, Leidy et al. 2005). The BSA is also listed as designated Critical Habitat for Coho salmon (*O. kisutch*), although this species is considered extirpated from the tributaries and waters of San Francisco Bay (NMFS 2012, Brown and Moyle 1991). Additionally, the BSA contains EFH for Pacific salmonids. Based on habitat and conditions within the BSA and documented occurrences nearby, it was determined that the BSA has potential to support CCC steelhead, NSO, and five other the special-status wildlife species identified in Table 1.

The proposed project primarily involves short-term, temporary impacts and will not disrupt connectivity in the region. Project activities will occur when San Anselmo Creek within the BSA is dry. The creek channel will be restored to conditions similar to pre-project conditions which will allow for continued fish passage following the completion of work. Sensitive habitat within the BSA is limited to San Anselmo Creek which is an intermittent waterway in this reach. San Anselmo Creek is subject to USACE, RWQCB, and the CDFW jurisdiction.

Table 1: Listed, Proposed Species, and Critical Habitat Potentially Occurring or Known to Occur in the BSA.

Common Name	Scientific Name	Status	General Habitat Description	Habitat Present/ Absent	Rationale
Birds					
northern spotted owl	*Strix occidentalis caurina*	FT, ST, SSC	Old-growth forests or mixed stands of old-growth and mature trees. Occasionally in younger forests with patches of big trees. Prefers high, multistory canopy dominated by big trees, trees with cavities or broken tops, woody debris and space under canopy.	HP	The BSA and immediately surrounding area are low-density residential developments; however, riparian redwood forest community is in proximity to the BSA. This species has been documented to nest in dense forest within 800 feet south of the BSA (CDFW 2017b).
short-eared owl	*Asio flammeus*	SSC	Found in swamp lands, both fresh and salt; lowland meadows; irrigated alfalfa fields. Tule patches/tall grass needed for nesting/daytime seclusion. Nests on dry ground in depression concealed in vegetation.	A	The BSA and immediately surrounding area are low-density residential developments and riparian redwood forest which do not provide nesting habitat for the species. Lowland marshes, tule patches or tall grasslands that typically support nesting by the species do not occur in the BSA.
long-eared owl	*Asio otus*	SSC	Primarily a year-round resident. Inhabits riparian bottomlands to tall willows and cottonwoods; also, belts of live oak paralleling stream courses. Requires dense foliage cover within occupied tree stands, adjacent open land productive of mice for foraging, and the presence of old nests of other birds for nesting.	A	This species is a very rare breeder in Marin County (Shuford 1993). The only recorded nesting occurrences of the species are near Bolinas and Drake's Bay. Both locations are greater than 5 miles from the BSA (Shuford 1993). Areas within the BSA and immediately surrounding do not contain riparian communities suitable for nesting by this species.

Common Name	Scientific Name	Status	General Habitat Description	Habitat Present/ Absent	Rationale
burrowing owl	*Athene cunicularia*	SSC, BCC	Open, dry annual or perennial grasslands, deserts, and scrublands characterized by low-growing vegetation. Subterranean nester, dependent upon burrowing mammals, most notably, the California ground squirrel	A	The BSA and immediately surrounding area are low-density residential developments and largely forested landscape. The BSA does not contain short grasslands or other open areas suitable for nesting or foraging by this species.
golden eagle	*Aquila chrysaetos*	EPA, CFP, BCC	Resident in rolling foothills, mountain areas, sage-juniper flats, and desert. Cliff-walled canyons provide nesting habitat in most parts of range; also nests in large trees in open areas.	A	The BSA and immediately surrounding area are low-density residential developments and riparian redwood forest which do not provide suitable nesting habitat for the species. The BSA also does not support habitat for the preferred prey species of golden eagle.
bald eagle	*Haliaeetus leucocephalus*	FD, SE, EPA, CFP, BCC	Primarily a winter visitor in the region; small numbers are present year-round and breed. Favors areas near larger bodies of water with abundant fish: lakes and reservoirs, rivers, and the ocean. Nests in large, old-growth, or dominant live tree with open branchwork. Often roosts communally in winter.	A	Although the BSA is within this species' historic breeding range, bald eagles are no longer known to breed in Marin County (Shuford 1993). The BSA and the vicinity do not provide larger open bodies of water to support foraging or nesting.
northern harrier	*Circus cyaneus*	SSC	(Nesting) Nests and forages in grassland habitats, usually in association with coastal salt and freshwater marshes. Nests on ground in shrubby vegetation, usually at marsh edge; nest built of a large mound of sticks in wet areas.	A	The BSA and immediately surrounding area are low-density residential developments and largely forested landscape which do not provide nesting habitat for the species. Suitable mesic grasslands or marsh habitat are absent from the BSA and the immediate surrounding areas.

Common Name	Scientific Name	Status	General Habitat Description	Habitat Present/ Absent	Rationale
white-tailed kite	*Elanus leucurus*	CFP	(Nesting) Year-long resident of open grasslands and agricultural areas. Preys on small diurnal mammals and occasional birds, insects, reptiles, and amphibians. Nests in tree-tops.	A	The BSA and immediately surrounding area are low-density residential developments in a largely forested landscape and do not provide nesting habitat for the species. The BSA does not contain open areas such as agricultural fields, grasslands or marsh that are typically used by this species.
American peregrine falcon	*Falco peregrinus anatum*	FD, SD,CFP, BCC	Year-round resident and winter visitor in the region. Habitat variable, though usually associated with coasts, bays, marshes and other bodies of water. Nests on sheer, protected cliffs and also on manmade structures including buildings and bridges. Preys on birds, especially waterbirds. Forages widely.	A	High cliffs and tall buildings typically used for nesting by this species are absent from the BSA and immediate surrounding area. Large water-bodies which provide foraging habitat are absent from the BSA and vicinity.
prairie falcon	*Falco mexicanus*	BCC	Year-round resident in areas of California and winter visitor. Inhabits dry, open terrains, including foothills and valleys. Breeding sites located on steep cliffs. Forages widely.	A	Although this species winters in Marin County, it does not nest there (Shuford 1993). Additionally, the BSA does not contain xeric open areas such as grasslands that are typically used by this species. This species could occasionally be observed flying over the BSA during migration.
ferruginous hawk	*Buteo regalis*	BCC	Winter visitor to open habitats, including grasslands, sagebrush flats, scrub, and low foothills surrounding valleys. Preys on mammals. Does not breed in California.	A	Although this species winters in Marin County, it does not nest there (Shuford 1993). Additionally, the BSA does not contain xeric open areas such as grasslands that are typically used by this species. This species could occasionally be observed flying over the BSA during migration.

Common Name	Scientific Name	Status	General Habitat Description	Habitat Present/ Absent	Rationale
American white pelican	*Pelecanus erythrorhynchos*	SSC	Colonial nester on large interior lakes. Nests on large lakes, providing safe roosting and breeding places in the form of well-sequestered islets. Winter visitor to the San Francisco Bay Area.	A	American white pelican does not nest in Marin County (Shuford 1993). Additionally, suitable foraging habitat does not occur within 2 miles of the BSA.
California brown pelican	*Pelecanus occidentalis californicus*	FD, SD, CFP	Colonial nester on coastal islands just outside the surf line. Nests on coastal islands of small to moderate size which afford immunity from attack by ground-dwelling predators.	A	California brown pelican does not nest in Marin County (Shuford 1993). Additionally, suitable foraging habitat does not occur within 2 miles of the BSA.
marbled murrelet	*Brachyramphus marmoratus*	FT, SE	Feeds near shore; nests inland along the Pacific coast, from Eureka to Oregon border, and from Half Moon Bay to Santa Cruz. Nests in old-growth redwood-dominated forests, up to six miles inland. Nests often built in Douglas-fir or redwood stands containing platform-like branches.	A	Despite the presence of riparian redwood forest within and surrounding the BSA and the designated critical habitat 3.5 miles south of the BSA, marbled murrelet is not known to breed within Marin County (Shuford 1993, McShane et al. 2004, USFWS 2009).
short-tailed albatross	*Phoebastria albatrus*	FE, SSC	Highly pelagic; comes to land only when breeding. Nests on remote Pacific islands. A rare non-breeding visitor to the eastern Pacific.	A	Short-tailed albatross does not nest in Marin County. Additionally, suitable marine foraging habitat does not occur within 5 miles of the BSA.
black oystercatcher	*Haematopus bachmani*	BCC	Resident on rocky shores of marine habitats along almost the entire California coast and adjacent islands. Breeds on undisturbed, rocky, open shores and cliffs.	A	The BSA is not within the known breeding distribution of this species. Rocky shoreline and marine habitats which support nesting and foraging by the species are absent from the BSA and vicinity.

Common Name	Scientific Name	Status	General Habitat Description	Habitat Present/ Absent	Rationale
Caspian tern	*Hydroprogne caspia*	BCC	Nests in small colonies inland and along the coast on sandy estuarine shores, levees, and salt ponds. Found in inland fresh-water lakes and marshes; also, brackish or salt waters of estuaries and bays.	A	The BSA is not within the known breeding distribution of this species. Islands, shores, levees or salt ponds that support nesting by this species are absent. The BSA does not occur near marine environments to support foraging.
California least tern	*Sternula antillarum browni*	FE, SE, CFP	Colonial breeder on barren or sparsely vegetated, flat substrates near water. Breeding colonies in San Francisco Bay along estuarine shores and in abandoned salt ponds.	A	The BSA is not within the known breeding distribution of this species. Islands, shores, levees or salt ponds that support nesting by this species are absent. The BSA does not occur near marine environments to support foraging.
black skimmer	*Rynchops niger*	SSC, BCC	Found primarily in southern California; South San Francisco Bay has a small resident population. Nests colonially on gravel bars, low islets, and sandy beaches	A	The BSA is not within the known breeding distribution of this species. Islands, shores, levees or salt ponds that support nesting by this species are absent. The BSA does not occur near marine environments to support foraging.
western snowy plover	*Charadrius alexandrinus nivosus*	FT, SSC, BCC	Federal listing applies only to the Pacific coastal population. Found on sandy beaches, salt pond levees and shores of large alkali lakes. Requires sandy, gravelly or friable soils for nesting.	A	The BSA and immediately surrounding area are low-density residential developments within a largely forested landscape. Sandy beaches, salt flats or alkali lake flats that this species inhabits are absent from the BSA and vicinity.
California Ridgway's rail	*Rallus obsoletus obsoletus*	FE, SE, CFP	Resident in tidal marshes of the San Francisco Bay Estuary. Requires tidal sloughs and mud flats for foraging, and dense vegetation for nesting. Associated with abundant growth of cordgrass and pickleweed. Largest populations in south San Francisco Bay.	A	The BSA is not within the known breeding distribution of this species. The BSA lacks any salt marsh habitat which this species requires for nesting and foraging.

Common Name	Scientific Name	Status	General Habitat Description	Habitat Present/ Absent	Rationale
California black rail	*Laterallus jamaicensis coturniculus*	ST, CFP, BCC	Resident in marshes (saline to freshwater) with dense vegetation below four inches in height. Prefers larger, undisturbed marshes close to a major water source.	A	The BSA is not within the known breeding distribution of this species. The BSA lacks any marsh habitat that this species requires for nesting and foraging.
great egret	*Ardea alba*	None	(Rookeries tracked by CDFW) Colonial nester in large trees. Rookery sites located near marshes, tide-flats, irrigated pastures, and margins of rivers and lakes.	A	Suitable rookery trees are absent from the BSA and vicinity; however, this species may occasionally fly over or forage within the BSA.
snowy egret	*Egretta thula*	none	(Rookeries tracked by CDFW) Colonial nester, with nest sites situated in protected beds of dense tules. Rookery sites situated close to foraging areas: marshes, tidal-flats, streams, wet meadows, and borders of lakes.	A	Suitable rookery trees are absent from the BSA and vicinity; however, this species may occasionally fly over or forage within the BSA.
great blue heron	*Ardea herodias*	None	(Rookeries tracked by CDFW) Colonial nester in tall trees, cliffs, and sequestered spots on marshes. Rookery sites in close proximity to foraging areas: marshes, lake margins, tide-flats, rivers and streams, wet meadows.	A	Suitable rookery trees are absent from the BSA and vicinity; however, this species may occasionally fly over or forage within the BSA.
black-crowned night heron	*Nycticorax nycticorax*	none	(Rookeries tracked by CDFW) Colonial nester, usually in trees, occasionally in tule patches. Rookery sites located adjacent to foraging areas: lake margins, mud-bordered bays, marshy spots.	A	Suitable rookery trees are absent from the BSA and vicinity; however, this species may occasionally fly over or forage within the BSA.

Common Name	Scientific Name	Status	General Habitat Description	Habitat Present/ Absent	Rationale
double-crested cormorant	*Phalacrocorax auritus*	none	(Rookeries tracked by CDFW) Colonial nester on coastal cliffs, offshore islands, and along lake margins in the interior of the state. Nests along coast on sequestered islets, usually on ground with sloping surface, or in tall trees along lake margins.	A	Suitable rookery cliffs or other structures are absent from the BSA and vicinity; however, this species may occasionally fly over the BSA.
black swift	*Cypseloides niger*	SSC, BCC	Summer resident with a fragmented breeding distribution; most occupied areas in California either montane or coastal. Breeds in small colonies on cliffs behind or adjacent to waterfalls, in deep canyons, and sea-bluffs above surf. Forages aerially over wide areas.	A	Marin County is not within the documented breeding range of this species (Shuford 1993). Additionally, the BSA does not contain cliffs or deep canyons capable of providing nesting habitat for this species.
Vaux's swift	*Chaetura vauxi*	SSC	Summer resident, primarily in forested areas. Nests in tree cavities, favoring those with a large vertical extent. Also uses chimneys and other manmade substrates. Forages widely for aerial insects, often over or near rivers and lakes.	A	Trees within the BSA did not contain cavities typical of this species, and no snags are present. Redwood trees in the BSA did not have snags or limb loss with potential to create a large cavity for use by this species. This species is documented as an infrequent nester in Marin County (Shuford 1993).
purple martin	*Progne subis*	SSC	Summer resident. In northwestern California, typically breeds in coniferous forest and woodlands. Nest in tree cavities, usually high off the ground, and in the cavities of manmade structures (e.g. bridges, utility poles). Forages for aerial insects.	HP	Although no obvious cavities suitable for use by this species were observed within the BSA, the large redwoods may contain cavities which were not visible. The bridge did not contain cavities suitable for use; however, adjacent redwood and large trees may provide nesting habitat for this species.

Common Name	Scientific Name	Status	General Habitat Description	Habitat Present/ Absent	Rationale
bank swallow	*Riparia riparia*	ST	Migrant in riparian and other lowland habitats in western California. Colonial nester in riparian areas with vertical cliffs and bands with fine-textured or fine-textured sandy soils near streams, rivers, lakes or the ocean.	A	Bank swallow does not nest in Marin County. The BSA lacks any cliff habitat which this species requires for nesting. The species may pass through the BSA during migration.
olive-sided flycatcher	*Contopus cooperi*	SSC, BCC	Summer resident. Typical breeding habitat is montane coniferous forests. At lower elevations, also occurs in wooded canyons and mixed forests and woodlands. Often associated with forest edges. Arboreal nest sites located well off the ground.	HP	This species is known to the area and the BSA contains riparian redwood forest that this species may use for nesting (Shuford 1993, eBird 2016).
Nuttall's woodpecker	*Picoides nuttallii*	BCC	Resident in lowland woodlands throughout much of California west of the Sierra Nevada. Typical habitat is dominated by oaks.	HP	Oak woodland typical of this species is not present within the BSA; however, this species is known to inhabit residential areas in the region and may occur within the BSA.
oak titmouse	*Baeolophus inornatus*	BCC	Oak woodland and savannah, open broad-leaved evergreen forests containing oaks, and riparian woodlands. Associated with oak and pine-oak woodland and arborescent chaparral	HP	Oak woodland typical of this species is not present within the BSA; however, this species is known to inhabit residential areas in the region and may occur within the BSA.

Common Name	Scientific Name	Status	General Habitat Description	Habitat Present/ Absent	Rationale
Allen's hummingbird	*Selaphorus sasin*	BCC	Breeds along the California coastline in habitats including mixed evergreen, Douglas fir, redwood and Bishop pine forests, riparian woodlands, nonnative eucalyptus and planted cypress groves, and occasionally live oak woodlands and coastal scrub with at least a scattering of trees, such as on north-facing slopes	HP	Riparian redwood forest within and surrounding the BSA may provide suitable nest-trees and foraging habitat which may support this species.
rufous hummingbird	*Selasphorus rufus*	BCC	Spring migrant; does not breed in California. Favors habitats rich in nectar-producing flowers. Nests in berry tangles, shrubs, deciduous forests and conifers. Favors habitats rich in nectar-producing flowers.	A	The BSA is outside of the known breeding range for this species, but rufous hummingbird may be observed during migration seasons.
loggerhead shrike	*Lanius ludovicianus*	SSC, BCC	Primarily a year-round resident in open habitats including woodland, grassland, savannah and agricultural areas. Prefers areas with sparse shrubs, trees, posts, and other suitable perches for foraging. Preys upon large insects and small vertebrates. Nests are well-concealed in a densely-foliaged shrub or tree.	A	The BSA and immediately surrounding area are low-density residential developments and largely comprised of riparian redwood forest which does not provide nesting habitat for the species. The BSA does not contain open areas such as agricultural fields, grasslands or marsh that are typically used by this species.
yellow warbler	*Setophaga (Dendroica) petechia brewsteri*	SSC, BCC	Summer resident throughout much of California. Breeds in riparian vegetation close to water, including streams and wet meadows. Microhabitat used for nesting variable, but dense willow growth is typical. Occurs widely on migration.	A	The BSA and immediately surrounding area are low-density residential developments in a forested landscape and open understory. The BSA lacks the dense riparian understory that this species requires for nesting. This species may occur within the BSA during migration.

Common Name	Scientific Name	Status	General Habitat Description	Habitat Present/ Absent	Rationale
saltmarsh common yellowthroat	*Geothlypis trichas sinuosa*	SSC, BCC	Resident of the San Francisco Bay region, in fresh and salt water marshes. Requires thick, continuous cover down to water surface for foraging; tall grasses, tule patches, willows for nesting.	A	The BSA is not within the known breeding distribution of this species. Suitable salt marsh habitat which is required for nesting and foraging is absent from the BSA and vicinity.
yellow-breasted chat	*Icteria virens*	SSC	Summer resident, utilizing riparian areas with an open canopy, very dense understory, and trees for song perches. Nests in thickets of willow, blackberry, and wild grape.	A	The BSA and immediately surrounding area are low-density residential developments in a forested landscape and open understory. The BSA lacks the dense riparian understory that this species requires for nesting.
grasshopper sparrow	*Ammodramus savannarum*	SSC	Summer resident. Nests in open grassland habitats, generally with low- to moderate-height grasses and scattered shrubs. Nest typically placed on the ground and well-hidden. Secretive.	A	The BSA does not contain annual grassland that could support nesting or foraging by the species. Additionally the BSA is located within coniferous forest which is not suitable for this species.
Alameda song sparrow	*Melospiza melodia pusillula*	SSC, BCC	Year-round resident of salt marshes bordering the south arm of San Francisco Bay. Inhabits primarily pickleweed marshes; nests placed in marsh vegetation, typically shrubs such as gumplant.	A	The BSA is not within the known breeding distribution of this species. The BSA lacks any marsh habitat that this subspecies requires for nesting and foraging.
Samuel's (San Pablo) song sparrow	*Melospiza melodia samuelis*	SSC, BCC	Resident of salt marshes along the north side of San Francisco and San Pablo Bays. Inhabits tidal sloughs in the *Salicornia* marshes; nests in *Grindelia* bordering slough channels.	A	The BSA is not within the known breeding distribution of this species. The BSA lacks any marsh habitat that this subspecies requires for nesting and foraging.

Common Name	Scientific Name	Status	General Habitat Description	Habitat Present/ Absent	Rationale
Bryant's savannah sparrow	*Passerculus sandwichensis alaudinus*	SSC	Year-round resident subspecies, associated with the coastal fog belt. Occupies upper tidally-influenced habitats and moist grasslands, often occurring where wetland communities merge into grassland. Nests in vegetation on or near the ground.	A	The BSA lacks the tidally influenced habitats and grasslands that this subspecies requires. The BSA is within low-density residential development and forested landscape.
Lawrence's goldfinch	*Carduelis lawrencei*	BCC	Resident to nomadic; inhabits oak woodlands, chaparral, riparian woodlands and other areas, often near water. Not known to breed in the vicinity of San Francisco Bay.	A	The BSA is within low-density residential development and forested landscape. This species is a very rare breeder in Marin County and typically inhabits the dry southern portions of the county, and the BSA does not contain chaparral or other xeric landscapes to support this species (Shuford 1993).
tricolored blackbird	*Agelaius tricolor*	SC, BCC, SSC	(Nesting colony) highly colonial species, most numerous in Central Valley and vicinity. Largely endemic to California. Requires open water, protected nesting substrate, and foraging area with insect prey within a few kilometers of the colony.	A	The BSA does not contain any open waters such as ponds, lakes or marsh habitat that supports foraging or nesting by the colony. The blackberry shrubs located along the banks in the vicinity of the BSA are not sufficiently dense or large enough to support nesting by this species.

Common Name	Scientific Name	Status	General Habitat Description	Habitat Present/ Absent	Rationale
Mammals					
pallid bat	*Antrozous pallidus*	SSC, WBWG	Found in deserts, grasslands, shrublands, woodlands, and forests. Most common in open, forages along river channels. Roost sites include old ranch buildings, rocky outcrops and caves within sandstone outcroppings. Roosts must protect bats from high temperatures. Very sensitive to disturbance of roosting sites.	A	The BSA and immediately surrounding area are low-density residential developments with no rock outcroppings or ranch type buildings to provide roosting sites. Trees did not contain cavities suitable for this species. The bridge has no exposed cracks or seams and is regularly disturbed by vehicles and pedestrians, making the structure and the surrounding area unsuitable for the species.
Townsend's big-eared bat	*Corynorhinus townsendii*	SSC, WBWG	This species is associated with a wide variety of habitats from deserts to mid-elevation mixed coniferous-deciduous forest. Females form maternity colonies in buildings, caves and mines and males roost singly or in small groups. Foraging occurs in open forest habitats where they glean moths from vegetation.	A	The BSA and immediately surrounding area are low-density residential developments. Buildings in the area are maintained and do not provide suitable roosting habitat. Additionally, there are no caves, mines or suitable openings in the bridge structure to support roosting by the species within the BSA.
western red bat	*Lasiurus blossevillii*	SSC, WBWG	This species is typically solitary, roosting primarily in the foliage of trees or shrubs. Day roosts are commonly in edge habitats adjacent to streams or open fields, in orchards, and sometimes in urban areas. There may be an association with intact riparian habitat (willows, cottonwoods, and sycamore).	A	The complexity of edge habitats required by the species is not present within the BSA, and the BSA does not contain densely foliated riparian trees and shrubs to support roosting. This species may occasionally fly over the BSA.

Common Name	Scientific Name	Status	General Habitat Description	Habitat Present/ Absent	Rationale
hoary bat	*Lasiurus cinereus*	WBWG	Prefers open habitats or habitat mosaics, with access to trees for cover and open areas or habitat edges for feeding. Roosts in dense foliage of medium to large trees. Feeds primarily on moths. Requires water.	A	The BSA does not provide suitable open foraging habitat mosaics which are required by the species, and the BSA does not contain densely foliated trees and shrubs to support roosting.
fringed myotis	*Myotis thysanodes*	WBWG	Associated with a wide variety of habitats including mixed coniferous-deciduous forest and redwoods/sequoia groves. Buildings, mines, and large snags are important day and night roosts.	A	The BSA does not contain snags or trees large enough to contain cavities to provide roosting habitat. Additionally, no trees are to be removed by the proposed project. The bridge structure has no suitable seams, cracks or crevices that might provide roosting habitat for the species. This species may occasionally fly through or forage over the BSA.
long-eared myotis	*Myotis evotis*	WBWG	Occurs in semiarid shrublands, sage, chaparral, and agricultural areas, but is usually associated with coniferous forests from seal level to 9000 feet. Individuals roost under exfoliating tree bark, and in hollow trees, caves, mines, cliff crevices, and rocky outcrops on the ground. They also sometimes roost in buildings and under bridges.	A	The BSA does not contain snags or trees large enough to contain cavities to provide roosting habitat. Additionally, no trees are to be removed by the proposed project. The bridge structure has no suitable seams, cracks or crevices that might provide roosting habitat for the species. This species may occasionally fly through or forage over the BSA.

Common Name	Scientific Name	Status	General Habitat Description	Habitat Present/ Absent	Rationale
long-legged myotis	*Myotis volans*	WBWG	Typically occupies mountainous or relatively rugged areas, dry coniferous forests, and sometimes oak or streamside woodlands, and deserts. Large hollow trees, rock crevices and buildings are important day roosts. Other roosts include caves, mines and buildings.	A	The BSA does not contain snags or trees large enough to contain cavities to provide roosting habitat. Additionally, no trees are to be removed by the proposed project. The bridge structure has no suitable seams, cracks or crevices that might provide roosting habitat for the species. This species may occasionally fly through or forage over the BSA.
silver-haired bat	*Lasionycteris noctivagans.*	WBWG	Summer habitats include coastal and montane coniferous forests, valley foothill woodlands, pinyon-juniper woodlands, and valley foothill and montane riparian habitats. This species is primarily a forest dweller, feeding over streams, ponds, and open brushy areas. It roosts in hollow trees, snags, buildings, rock crevices, caves, and under bark.	A	The BSA does not contain snags or trees large enough to contain cavities to provide roosting habitat. Additionally, no trees are to be removed by the proposed project. The bridge structure has no suitable seams, cracks or crevices that might provide roosting habitat for the species. This species may occasionally fly through or forage over the BSA.
salt-marsh harvest mouse	*Reithrodontomys raviventris*	FE, SE, CFP	Found only in the saline emergent wetlands of San Francisco Bay and its tributaries. Pickleweed is primary habitat. Do not burrow, build loosely organized nests. Require higher areas for flood escape.	A	The BSA and immediately surrounding area are low-density residential developments and riparian redwood forest. Marshes and tidal marine environments that are required to support this species do not occur within or near the BSA.
Suisun shrew	*Sorex ornatus sinuosus*	SSC	Tidal marshes of the northern shores of San Pablo and Suisun Bays. Require dense low-lying cover and driftweed and other litter above the mean high tide line for nesting and foraging.	A	The BSA and immediately surrounding area are low-density residential developments and riparian redwood forest. Marshes and tidal marine environments that are required to support this species do not occur within or near the BSA.

Common Name	Scientific Name	Status	General Habitat Description	Habitat Present/ Absent	Rationale
salt-marsh wandering shrew	*Sorex vagrans halicoetes*	SSC	Confined to small remnant stands of salt marsh found around the southern arm of the San Francisco Bay in San Mateo, Santa Clara, Alameda and Contra Costa counties. Inhabits salt marshes that provide dense cover with driftwood and other debris.	A	The BSA and immediately surrounding area are low-density residential developments and riparian redwood forest. Marshes and tidal marine environments that are required to support this species do not occur within or near the BSA.
San Pablo vole	*Microtus californicus sanpabloensis*	SSC	Saltmarshes of San Pablo Creek, on the south shore of San Pablo Bay. Constructs burrow in soft soil. Feeds on grasses, sedges and herbs. Forms a network of runways leading from the burrow	A	The BSA and immediately surrounding area are low-density residential developments and riparian redwood forest. Marshes and tidal marine environments that are required to support this species do not occur within or near the BSA.
American badger	*Taxidea taxus*	SSC	Most abundant in drier open stages of most shrub, forest, and herbaceous habitats, with friable soils. Requires friable soils and open, uncultivated ground. Preys on burrowing rodents.	A	The BSA and immediately surrounding area are low-density residential developments and riparian redwood forest. Open areas with friable soils which support the preferred prey for badgers and badger dens do not occur within the BSA.
Point Reyes jumping mouse	*Zapus trinotatus orarius*	SSC	Bunch grass marshes on the uplands of Point Reyes in areas safe from continuous inundation. Builds grassy nests on ground under vegetation, burrows in winter.	A	The BSA and immediately surrounding area are low-density residential developments and riparian redwood forest. The BSA lacks marsh or grasslands that this subspecies requires for nesting and foraging, and the BSA is outside the known range of this subspecies..

Common Name	Scientific Name	Status	General Habitat Description	Habitat Present/ Absent	Rationale
Point Reyes mountain beaver	*Aplodontia rufa phaea*	SSC	The Point Reyes mountain beaver is only known to occur in western Marin County, almost entirely within Point Reyes National Seashore. It occurs on cool, moist, north-facing slopes in moderately dense coastal scrub. Burrows are typically constructed in dense thickets or in forest openings; and it feeds on coyote brush, sword fern, cow parsnip, black berries, poison oak, California nettle, and thistle.	A	The BSA is not within the known distribution of this species. The BSA and immediately surrounding area are low-density residential developments and primarily comprised of riparian redwood forest. The BSA does not contain any coastal scrub habitat which is required by the species.
ringtail (ring-tailed cat)	*Bassariscus astutus*	CFP	Is widely distributed throughout most of California, but absent from some portions of the Central Valley and northeastern California. The species is nocturnal, primarily carnivorous and is associated with a mixture of dry forest and shrubland in close association with rocky areas and riparian habitat, using hollow trees and cavities for shelter.	A	The BSA and immediately surrounding area are low-density residential developments and riparian redwood forest. Anthropogenic disturbances in the area and an absence of suitable trees to provide cavities make the species unlikely to occur.
southern sea otter	*Enhydra lutris nereis*	FT, MMPA: SSC, CFP	Nearshore marine environments from about Año Nuevo, San Mateo County to Point Sal, Santa Barbara County.	A	The BSA is not within the known breeding distribution of this species. Additionally, The BSA lacks any marine habitat which is required by this species.

Common Name	Scientific Name	Status	General Habitat Description	Habitat Present/ Absent	Rationale
Amphibians and Reptiles					
western pond turtle	*Actinemys marmorata*	SSC	Associated with permanent or nearly permanent water in a wide variety of habitats. Requires basking sites. Nests sites may be found up to 0.5 kilometers from water.	A	There are no known occurrences of this species in the watershed or vicinity. The BSA is over 2 miles from the nearest documented occurrence in a different watershed (CDFW 2017a). The BSA is canopied and does not provide suitable basking areas to support the species.
California giant salamander	*Dicamptodon ensatus*	SSC	Occurs in the north-central Coast Ranges. Moist coniferous and mixed forests are typical habitat; also uses woodland and chaparral. Adults are terrestrial and fossorial, breeding in cold, permanent or semi-permanent streams. Larvae usually remain aquatic for over a year.	A	There are no known occurrences of this species in San Anselmo Creek (CDFW 2017a); and this section of San Anselmo Creek is not perennial. The banks of the creek within the BSA are developed and cemented; thus, no refugia is present for adults.
foothill yellow-legged frog	*Rana boylii*	SSC	Found in or near rocky streams in a variety of habitats. Prefers partly-shaded, willow streams and riffles with a rocky substrate; requires at least some cobble-sized substrate for egg-laying. Needs at least 15 weeks to attain metamorphosis. Feeds on both aquatic and terrestrial invertebrates.	A	This species has not been documented within the watershed, and the closest documented occurrence is 2.5 miles east of the BSA in a different watershed (CDFW 2017a).
California red-legged frog	*Rana draytonii*	FT, SSC	Lowlands and foothills in or near permanent sources of deep water with dense, shrubby or emergent riparian vegetation. Requires 11 to 20 weeks of inundation for larval development. Must have access to estivation habitat.	A	No ponds or lakes exist nearby that could provide adequate still water habitat to support breeding by this species. Additionally, this species has not been documented in this portion of Marin County; the nearest documented occurrences are over 5 miles from the BSA (CDFW 2017a).

Common Name	Scientific Name	Status	General Habitat Description	Habitat Present/ Absent	Rationale
Fishes					
pacific lamprey	*Entosphenus (=Lampetra) tridentatus*	SSC	Spawn between March and July in gravel bottomed streams in riffle habitat. Larvae drift downstream to areas of low velocity and fine substrates and are relatively immobile in the stream substrates.	A	Two barriers to anadromy exist downstream of the BSA; however, San Anselmo Creek is considered anadromous (CDFW 2017d). The BSA does not contain suitable spawning or larval habitat for this species based upon gradient and substrate and this species has not been documented within San Anselmo Creek.
river lamprey	*Lampetra ayresi*	SSC	Lower Sacramento River, San Joaquin River and Russian River. May occur in coastal streams north of San Francisco Bay. Adults need clean, gravelly riffles, Ammocoetes need sandy backwaters or stream edges, good water quality and temps < 25 degrees C.	A	Two barriers to anadromy exist downstream of the BSA; however, San Anselmo Creek is considered anadromous (CDFW 2017d). However, the BSA is not within the known distribution of this species (UC Davis 2017).
white sturgeon	*Acipenser transmontanus*	SSC	Found in most estuaries along the Pacific coast. Adults in the San Francisco Bay Estuary system spawn in the Sacramento River and are not known to enter freshwater or non-tidal reaches of Estuary streams. Spawn May through June.	A	The BSA is not within the known distribution of this species (UC Davis 2017). Additionally, The BSA lacks any estuarine/river habitat which is required by this species for breeding.
green sturgeon	*Acipenser medirostris*	FT, SSC	Spawn in the Sacramento River and the Klamath River. Spawn at temperatures between 8-14 degrees C. Preferred spawning substrate is large cobble, but can range from clean sand to bedrock.	A	The BSA is not within the known distribution of this species (UC Davis 2017). Additionally, The BSA lacks any marine habitat which is required by this species for foraging.

Common Name	Scientific Name	Status	General Habitat Description	Habitat Present/ Absent	Rationale
tidewater goby	*Eucyclogobius newberryi*	FE, SSC	Brackish water habitats along the California coast from Agua Hedionda Lagoon, San Diego County to the mouth of the Smith River. Found in willow lagoons and lower stream reaches, they need fairly still but not stagnant water and high oxygen levels.	A	The BSA is not within the known distribution of this species (UC Davis 2016). Additionally, The BSA lacks any lagoon habitat which is required by this species.
delta smelt	*Hypomesus transpacificus*	FT, SE, RP	Lives in the Sacramento-San Joaquin estuary in areas where salt and freshwater systems meet. Occurs seasonally in Suisun Bay, Carquinez Strait and San Pablo Bay.	A	The BSA is not within the known distribution of this species (UCDvis 2017). Additionally, the BSA lacks any brackish water habitat which is required by this species.
Tomales roach	*Lavinia symmetricus* ssp. *symmetricus*	SSC	Habitat generalists. Tolerant of relatively high temperatures and low oxygen levels, however unable to tolerate very saline water. Tributaries to Tomales Bay.	A	The BSA is not within the known distribution of this species (UC Davis 2017).
Coho salmon - central California coast	*Oncorhynchus kisutch*	FE, SE	State listing is limited to Coho south of San Francisco Bay. Federal listing is limited to naturally spawning populations in streams between Humboldt County and Santa Cruz County. Spawn in coastal streams 4-14C. Prefer beds of loose, silt-free, coarse gravel and cover nearby.	A, CH	San Anselmo Creek is designated as critical habitat for the species. However, the species is considered extirpated from the tributaries of San Francisco Bay (NMFS 2012, Brown and Moyle 1991).

Common Name	Scientific Name	Status	General Habitat Description	Habitat Present/ Absent	Rationale
steelhead - central California coast DPS	*Oncorhynchus mykiss*	FT	Occurs from the Russian River south to Soquel Creek and Pajaro River. Also in San Francisco and San Pablo Bay Basins. Adults migrate upstream to spawn in cool, clear, well-oxygenated streams. Juveniles remain in fresh water for 1 or more years before migrating downstream to the ocean.	P, CH	San Anselmo Creek is designated as critical habitat for the central California coastal DPS of this species. Though two barriers to anadromy exist downstream of the BSA, the species is considered present within the creek.
chinook salmon – Central Valley fall/late fall-run ESU	*Oncorhynchus tshawytscha*	SSC	Populations spawning in the Central Valley, Napa and Petaluma Rivers and their tributaries. Adults migrate upstream to spawn in cool, clear, well-oxygenated streams. Juveniles remain in fresh water for 1 or more years before migrating downstream to the ocean	A	The BSA is not within the known distribution of this species (UC Davis 2017). This ESU only spawns in and in tributaries of the Sacramento and San Joaquin Rivers. Additionally, the BSA lacks any marine or brackish water habitats which may be used for foraging or rearing habitat by the species.
chinook salmon - California coastal ESU	*Oncorhynchus tshawytscha*	FT, RP	California Coastal Chinook Salmon ESU includes all naturally spawned populations of Chinook salmon from rivers and streams south of the Klamath River (exclusive) to the Russian River (inclusive). Adult numbers depend on pool depth and volume, amount of cover, and proximity to gravel.	A	The BSA is not within the known breeding distribution of this species (UC Davis 2017). This ESU is only known to spawn in tributaries along coastal California that lead directly to the ocean without going through San Francisco Bay. Additionally, the BSA lacks any marine or brackish water habitats which may be used for foraging or rearing habitat by the species.
Sacramento splittail	*Pogonichthys macrolepidotus*	SSC	Endemic to California's Central Valley and the Sacramento-San Joaquin Delta. Primarily freshwater fish, but are tolerant of moderate salinity. Spawn on submerged vegetation in temporarily flooded upland and riparian habitat.	A	The BSA is not within the known distribution of this species. The BSA does not contain any flooded upland or slow slough like habitat which this species requires for spawning.

Common Name	Scientific Name	Status	General Habitat Description	Habitat Present/ Absent	Rationale
longfin smelt	*Spirinchus thaleichthys*	FC, ST, SSC	Euryhaline, nektonic and anadromous. Found in open waters of estuaries, mostly in middle or bottom of water column. Prefer salinities of 15 to 30 ppt, but can be found in completely freshwater to almost pure seawater.	A	The BSA is not within the known distribution of this species. Additionally, the BSA lacks any marine or brackish water habitats which may be used for foraging or rearing habitat by the species.
eulachon	*Thaleichthys pacificus*	FT, SSC	Occur in nearshore ocean waters and to 1,000 feet (300 m) in depth, except for the brief spawning runs into their natal (birth) streams. Ranges from northern California to southwest Alaska and southeastern Bering Sea.	A	The BSA is not within the known distribution of this species. Additionally, the BSA lacks any marine or brackish water habitats which may be used for foraging or rearing habitat by the species.
Invertebrates					
Tomales isopod	*Caecidotea tomalensis*	SSI	Inhabits localized fresh-water ponds or streams with still or near-still water in several San Francisco Bay Area counties.	A	San Anselmo Creek which flows through the BSA is a flowing creek which does not provide the still water or pond habitat required by the species.
Marin blind harvestman	*Calicina diminua*	SSI	Known only from the type locality. Taken under serpentine on a grassland hillside on San Marin Drive, Novato, Marin County. They occur in mesic habitats, but are absent from situations where soils are saturated or periodically inundated. Most species occur under medium to large undisturbed rocks that are in contact with the soil.	A	Soils within San Anselmo Creek are periodically inundated and would thus preclude this species' presence. This species has only been documented at the type locality in Novato, approximately 7 miles north of the BSA.

Common Name	Scientific Name	Status	General Habitat Description	Habitat Present/ Absent	Rationale
Bay checkerspot butterfly	*Euphydryas editha bayensis*	FT, SSI	Restricted to native grasslands on outcrops of serpentine soil in the vicinity of San Francisco Bay. Plantago erecta is the primary host plant; Orthocarpus densiflorus and O. purpurscens are the secondary host plants.	A	The BSA is not within the known distribution of this species. Areas within the BSA and immediately surrounding are low-density residential developments and are largely comprised of coniferous forest. The BSA contains no serpentine soils that may support the host plants required by the species.
San Bruno elfin butterfly	*Callophrys mossii bayensis*	FE, SSI	Inhabits coastal mountainous areas with grassy ground cover, mainly in the vicinity of San Bruno Mountain, San Mateo County. Colonies are located on steep, north-facing slopes within the fog belt. Larval host plant is *Sedum spathulifolium.*	A	The BSA is not within the known distribution of this species. Areas within the BSA and immediately surrounding are low-density residential developments and are largely comprised of coniferous forest. The BSA contains no grassland that may support the host plants required by the species.
monarch butterfly	*Danaus plexippus*	SSI	Winter roost sites extend along the coast from northern Mendocino to Baja California, Mexico. Roosts located in wind-protected tree groves (eucalyptus, Monterey pine, Monterey cypress), with nectar and water sources nearby.	A	Roost sites for monarchs in the areas surrounding the BSA are primarily in groves along the coast. No groves used as roost sites have been recorded within 6.5 miles of the BSA. The species may migrate through the area.
Ricksecker's water scavenger beetle	*Hydrochara rickseckeri*	SSI	Aquatic; known only from pond habitats scattered around the San Francisco Bay area.	A	San Anselmo Creek within the BSA does not provide pond habitat which is required to support the species.
mission blue butterfly	*Icaricia icarioides missionensis*	FE, RP, SSI	Inhabits grasslands of the San Francisco peninsula. Three larval host plants: *Lupinus albifrons, L. variicolor*, and *L. formosus*, of which *L. albifrons* is favored.	A	The BSA is not within the known distribution of this species. The BSA does not contain grassland required to support the host plants of the species.

Common Name	Scientific Name	Status	General Habitat Description	Habitat Present/ Absent	Rationale
Callippe silverspot butterfly	*Speyeria callippe*	FE, SSI	Restricted to the northern coastal scrub of the San Francisco peninsula. Host plant is Viola pedunculata. Most adults found on east-facing slopes; males congregate on hilltops in search of females.	A	The BSA is not within the known distribution of this species. The BSA is in a low-density residential and forested habitat which does not contain scrub required to support the host plants of the species.
Myrtle's silverspot butterfly	*Speyeria zerene myrtleae*	FE, RP, SSI	Restricted to the foggy, coastal dunes/hills of the Point Reyes peninsula; extirpated from coastal San Mateo County. Larval food plant thought to be Viola adunca.	A	The BSA is not within the known distribution of this species. The BSA is in a low-density residential and forested habitat. No dune or grassland habitat is present to support the host plants or foraging by the species.
California freshwater shrimp	*Syncaris pacifica*	FE, SE, RP, SSI	Endemic to Marin, Napa, and Sonoma counties. Found in low elevation, low gradient streams where riparian cover is moderate to heavy, willow pools away from main stream flow. Winter: undercut banks with exposed roots. Summer: leafy branches touching water.	A	The BSA is not within the known distribution of this species. Suitable habitat for the species is primarily found within northern Marin County along the border with Sonoma County. This species has not been documented in San Anselmo Creek.
Plants and Sensitive Natural Communities					
Sensitive Natural Communities					
Coastal Brackish Marsh, Coastal Terrace Prairie, Northern Coastal Salt Marsh, Serpentine Bunchgrass	NA	NA	NA	A	The BSA does not contain any of these habitats. No further actions are recommended for these Sensitive Natural Communities.

Common Name	Scientific Name	Status	General Habitat Description	Habitat Present/ Absent	Rationale
Sensitive Plants					
Sonoma alopecurus	*Alopecurus aequalis* var. *sonomensis*	FE, CNPS 1B.1	Freshwater marsh and swamp, and riparian scrub. 5-360 m. Flowers May-July.	A	All known occurrences of this species in the vicinity of the BSA are associated with coastal freshwater marsh and swamp, and riparian scrub. The BSA lacks suitable, sufficiently mesic habitat. No further actions are recommended for this species.
Napa false indigo	*Amorpha californica* var. *napensis*	CNPS 1B.2	Broadleaf upland forest, chaparral, cismontane woodland; openings in forest, woodland, and chaparral. 120-2,000 m. Flowers April-July.	HP	Woodland habitat within the BSA could support this species, however, this woody perennial was not observed during the field surveys, which were conducted when this species would be identifiable. No further actions are recommended for this species.
Bent-flowered fiddleneck	*Amsinckia lunaris*	BLMS, CNPS 1B.2	Cismontane woodland, valley and foothill grassland. 5-500 m. Flowers March-June.	A	The natural areas within the BSA are too shady for this species. This perennial species was not observed during the field surveys, which were conducted during the flowering period. No further actions are recommended for this species.
Franciscan manzanita	*Arctostaphylos franciscana*	FE, CNPS 1B.1	Serpentinite outcrops in chaparral. 60-300 m. Flowers January-April.	A	All known occurrences of this species in the vicinity of the BSA are associated with serpentine substrates. The BSA lacks suitable serpentine soils and chaparral habitat. No manzanitas (a woody perennial) were observed in the BSA. No further actions are recommended for this species.
Mt. Tamalpais manzanita	*Arctostaphylos montana* ssp. *montana*	CNPS 1B.3	Generally, serpentinite soil, valley and foothill grassland. 160-760 m. Flowers February-April.	A	All known occurrences of this species in the vicinity of the BSA are associated with serpentine substrates. The BSA lacks suitable serpentine soils; and no manzanitas (a woody perennial) were observed in the BSA. No further actions are recommended for this species.

Common Name	Scientific Name	Status	General Habitat Description	Habitat Present/ Absent	Rationale
Presidio manzanita	*Arctostaphylos montana* ssp. *ravenii*	FE,SE, CNPS 1B.1	Serpentinite soil, chaparral, coastal prairie, coastal scrub. 20-215 m. Flowers February-April.	A	All known occurrences of this species in the vicinity of the BSA are associated with serpentine substrates. The BSA lacks suitable serpentine soils and chaparral habitat. No manzanitas (a woody perennial) were observed in the BSA. No further actions are recommended for this species.
Marin manzanita	*Arctostaphylos montana* ssp. *virgata*	CNPS 1B.2	Broad-leaved upland forest, closed cone coniferous forest, chaparral, north coast coniferous forest, generally on sandstone or granitic soil. 160-760 m. Flowers December-March.	A	Limited, low quality, habitat occurs in the BSA. No manzanitas (a woody perennial) were observed. No further actions are recommended for this species.
Marsh sandwort	*Arenaria paludicola*	FE, SE, CNPS 1B.1	Freshwater marsh. 10-170 m. Flowers May-August.	A	No suitable habitat. No further actions are recommended for this species.
Coastal marsh milk-vetch	*Astragalus pycnostachyus* var. *pycnostachyus*	BLMS, CNPS 1B.2	Coastal salt marshes, coastal dunes, coastal scrub, stream sides. 0-30 m. Flowers April-October.	A	No suitable habitat. No further actions are recommended for this species.
Alkali milk-vetch	*Astragalus tener* var. *tener*	CNPS 1B.2	Alkali playa, valley and foothill grassland, vernal pools. 1-170 m. Flowers March-June.	A	No suitable habitat. No further actions are recommended for this species.
Tiburon mariposa lily	*Calochortus tiburonensis*	FT, ST, CNPS 1B.1	Serpentinite soil, valley and foothill grassland. Open rocky, serpentine. 50-150 m. Flowers March-June.	A	No suitable habitat. No further actions are recommended for this species.
Seaside bittercress	*Cardamine angulata*	CNPS 2B.1	North coast coniferous forest, lower montane coniferous forest, wet places. 65-951 m. Flowers April-June.	HP	This perennial species was not observed during the field surveys, which were conducted during the flowering period. The closest known occurrence of this species is a 1915 observation near the Town of Lagunitas, over 5 miles away. No further actions are recommended for this species.

Common Name	Scientific Name	Status	General Habitat Description	Habitat Present/ Absent	Rationale
Bristly sedge	*Carex comosa*	CNPS 2B.2	Marshes and swamps, lake margins, wet places.5-1,005 m. Flowers July-September.	A	Closest known occurrence was in 1866 in the Delta. No suitable habitat. No further actions are recommended for this species.
Lyngbye's sedge	*Carex lyngbyei*	CNPS 1B.1	Brackish or freshwater marshes. 0-10 m. Flowers May-August.	A	Closest known occurrence was in 1927 in Stinson Beach. No suitable habitat. No further actions are recommended for this species.
Tiburon Indian paintbrush	*Castilleja affinis* ssp. *neglecta*	FE, ST, CNPS 1B.2	Rocky serpentinite soil, valley and foothill grassland. 75-400 m. Flowers April-June.	A	No suitable habitat. No further actions are recommended for this species.
Mason's ceanothus	*Ceanothus masonii*	CNPS 1B.2	Dry rocky areas, chaparral. 230-500 m. Flowers March-April.	A	No suitable habitat. No further actions are recommended for this species.
Point Reyes bird's beak	*Chloropyron maritimum* ssp. *palustre*	BLMS, CNPS 1B.2	Coastal salt marsh. 0-10 m. Flowers June-October.	A	No suitable coastal salt marsh habitat. No further actions are recommended for this species.
Soft bird's beak	*Chloropyron molle (previously Cordylanthus mollis* ssp. *mollis)*	FE, SR CNPS 1B.2	Marshes and swamps (coastal salt). 0-10 m. Flowers July-November.	A	No suitable habitat. No further actions are recommended for this species.
San Francisco Bay spineflower	*Chorizanthe cuspidata* var. *cuspidata*	CNPS 1B.2	Sandy soil, coastal bluff scrub, coastal dunes, coastal prairie, coastal scrub. 3-250 m. Flowers April-August.	A	No suitable habitat. No further actions are recommended for this species.
Franciscan thistle	*Cirsium andrewsii*	CNPS 1B.2	Moist places in broadleafed upland forest on the coast, coastal bluff scrub, coastal prairie, and coastal scrub. 0-150 m. Flowers March-July.	A	No suitable habitat. No further actions are recommended for this species.
Mt. Tamalpais thistle	*Cirsium hydrophilum* var. *vaseyi*	CNPS 1B.2	Moist places in broadleafed upland forest, chaparral, meadows and seeps. Serpentine streams. 240-620 m Flowers May-August.	A	No suitable serpentine habitat. No further actions are recommended for this species.

Common Name	Scientific Name	Status	General Habitat Description	Habitat Present/ Absent	Rationale
Presidio clarkia	*Clarkia franciscana*	FE, SE, CNPS 1B.1	Serpentinite soil, valley and foothill grassland. 25-335 m. Flowers May-July.	A	No suitable serpentine habitat. No further actions are recommended for this species.
Round-headed Chinese houses	*Collinsia corymbosa*	CNPS 1B.2	Coastal dunes.0-20 m. Flowers April-June.	A	No suitable dune habitat. No further actions are recommended for this species.
San Francisco collinsia	*Collinsia multicolor*	CNPS 1B.2	Closed-cone coniferous forest, coastal scrub, on decomposed shale in humus. 30-250m. Flowers March-May.	A	No suitable habitat. No further actions are recommended for this species.
Robust spineflower	*Chorizanthe robusta* var. *robusta*	FE, Rank 1B.1	Chaparral (maritime), cismontane woodland (openings), coastal dunes, coastal scrub, sandy or gravelly.3-300 m. Flowers April-September.	A	All known occurrences of this species in the vicinity of the BSA are associated with sandy/gravelly soils in coastal habitat. The BSA lacks suitable sandy/gravelly soils in coastal habitat. No further actions are recommended for this species.
San Francisco Bay spineflower	*Chorizanthe cuspidata* var. *cuspidata*	CNPS 1B.2	Coastal bluff scrub, coastal dues, coastal prairie. Coastal scrub, sandy. 10-305 m. Flowers June-August.	A	All known occurrences of this species in the vicinity of the BSA are associated with sandy soils in coastal habitat. The BSA lacks suitable sandy coastal habitat. No further actions are recommended for this species.
Sonoma spineflower	*Chorizanthe cuspidata* var. *valida*	FE, SE, Rank 1B.1	Sandy coastal prairie. 10-305 m. Flowers June-August.	A	All known occurrences of this species in the vicinity of the BSA are associated with sandy soils in coastal prairie habitat. The BSA lacks suitable sandy coastal prairie habitat. No further actions are recommended for this species.
Golden larkspur	*Delphinium luteum*	FE, SR, CNPS 1B.1	Chaparral, coastal prairie, coastal scrub/rocky. 1-100 m. Flowers March-May.	A	The BSA is not in the critical habitat area. This site lacks suitable chaparral, coastal prairie habitat. No further actions are recommended for this species.

Common Name	Scientific Name	Status	General Habitat Description	Habitat Present/ Absent	Rationale
Western leatherwood	*Dirca occidentalis*	CNPS 1B.2	Mesic sites, broadleafed upland forest, closed-cone conifer forest, chaparral, cismontane woodland, north coast coniferous forest, riparian forest, riparian woodland. 25-425 m. Flowers January- April.	HP	Woodland habitat within the BSA may support this species. This perennial woody shrub species was not observed during the field surveys, which were conducted when this species would be identifiable. No further actions are recommended for this species.
Tiburon buckwheat	*Eriogonum luteolum* var. *caninum*	CNPS 1B.2	Serpentinite soil, chaparral, coastal prairie, valley and foothill grassland. 0-700 m. Flowers June-September.	A	No suitable habitat. No buckwheats were observed during surveys. No further actions are recommended for this species.
Koch's cord moss	*Entosthodon kochii*	CNPS 1B.3	Cismontane woodland and valley foothill grassland. Know from Plumas NF on serpentine river bank. 500-1,000 m. Flowers N/A.	A	No suitable serpentine habitat. No further actions are recommended for this species.
Minute pocket moss	*Fissidens pauperculus*	USFSS, CNPS 2B.2	North coast coniferous forest. On damp soil on the coast and in dry streambeds and banks on soil in humus comprised of heavily decayed wood. 10-100 m. Flowers N/A (best observed during the wet season).	HP	Mesic substrates within the BSA may have the potential to support this species. This species was not observed during the field surveys, which occurred during the wet season when this species is identifiable, though common member of the same genus was found (*Fissidens crispus*). No further actions are recommended for this species.
Marin checker lily	*Fritillaria lanceolata* var. *tristulis*	CNPS 1B.1	Coastal bluff scrub, coastal prairie, coastal scrub. Canyons and riparian areas and rocky outcrops. 15-150 m. Flowers February-April.	HP	Though not coastal, there is canyon like habitat adjacent to the creek. No *Fritillaria* were observed during the field surveys, which were conducted during the flowering period. No further actions are recommended for this species.
Fragrant fritillary	*Fritillaria liliacea*	USFSS, CNPS 1B.2	Coastal scrub, valley and foothill grassland, coastal prairie. Usually on clay soils, often on serpentine in grassland.3-410 m. Flowers February- April.	A	No suitable habitat. No further actions are recommended for this species.

Common Name	Scientific Name	Status	General Habitat Description	Habitat Present/ Absent	Rationale
Blue coast gilia	*Gilia capitata* ssp. *chamissonis*	CNPS 1B.1	Coastal dunes, coastal scrub. Elevation range: 2-180 m. Flowers April-July.	A	The BSA lacks suitable coastal dune and scrub habitat. No further actions are recommended for this species.
Woolly-headed gilia	*Gilia capitata* ssp. *tomentosa*	CNPS 1B.1	Rocky serpentine outcrops in coastal bluff scrub and valley and foothill grassland. 10-220 m. Flowers May-July.	A	All known occurrences of this species in the vicinity of the BSA are associated with serpentine soils in coastal bluff scrub and valley and foothill grassland. The BSA lacks suitable serpentine soils in coastal bluff scrub and valley and foothill grassland habitat. No further actions are recommended for this species.
Dark-eyed gilia	*Gilia millefoliata*	CNPS 1B.2, BLMS	Coastal dunes. 2-30 m. Flowers April-July.	A	All known occurrences of this species in the vicinity of the BSA are associated with coastal dunes. The BSA lacks suitable coastal dune habitat. No further actions are recommended for this species.
Diablo helianthella	*Helianthella castanea*	CNPS 1B.2, BLMS	Broadleaved upland forest, chaparral, coastal scrub, cismontane woodland, riparian woodland, valley and foothill grassland. 25-1150 m. Flowers April to June.	A	This species requires more sun than is found in the BSA. No *Helianthella* were observed during the field surveys, which were conducted during the flowering period. No further actions are recommended for this species.
Congested headed hayfield tarplant	*Hemizonia congesta* ssp. *congesta (Hemizonia congesta* ssp. *leucocephala)*	CNPS 1B.2	Coastal scrub, valley and foothill grassland; located in grassy valleys, hills, and fallow fields. 20-550 m. Flowers April-November.	A	All known occurrences of this species in the vicinity of the BSA are associated with coastal scrub and valley and foothill grassland. Surveys were conducted during the flowering period. The BSA lacks suitable habitat. No further actions are recommended for this species.
Marin western flax	*Hesperolinon congestum*	FT, ST, CNPS 1B.1	Serpentinite soil, chaparral, valley and foothill grassland. Known only from Marin, San Francisco, and San Mateo counties. In serpentine barrens and in serpentine grassland chaparral. 5-370 m. Flowers April-July.	A	No suitable habitat. No further actions are recommended for this species.

Common Name	Scientific Name	Status	General Habitat Description	Habitat Present/ Absent	Rationale
Water star-grass	*Heteranthera dubia*	CNPS 2B.2	Requires a pH of 7 or higher, usually in slightly eutrophic waters. Marshes and swamps (alkaline, still or slow-moving water). 30-1495 m. Flowers July-October.	A	No suitable habitat. No further actions are recommended for this species.
Santa Cruz tarplant	*Holocarpha macradenia*	FT, CE, CNPS 1B.1	Coastal prairie, coastal scrub, Valley and foothill grassland, often clay. 10-20 m. Flowers June-October.	A	No suitable habitat. No further actions are recommended for this species.
Kellogg's horkelia	*Horkelia cuneata* var. *sericea*	CNPS 1B.2, BLMS	Closed-cone coniferous forest, chaparral (maritime), coastal dunes, coastal scrub, openings, sandy/gravelly. 10-200 m. Flowers April-Sept.	A	No suitable habitat. No further actions are recommended for this species.
Thin-lobed horkelia	*Horkelia tenuiloba*	CNPS 1B.2, BLMS	Broadleaf upland forest, chaparral, valley and foothill grassland/mesic openings, sandy. 50-500 m. Flowers April-July.	A	Mesic soils within the BSA are in the lower part of the creek bank, however the site gets very limited sunlight. No *Horkelia* were observed during the field surveys, which were conducted during the flowering period. No further actions are recommended for this species.
Small groundcone	*Kopsiopsis hookeri*	CNPS 2.3	North coast coniferous forest, generally on salal (*Gaultheria shallon*) and *Vaccinium*. 90-885 m. Flowers April-August.	A	The BSA lacks suitable habitat for this species. No salal present. No further actions are recommended for this species.
Contra costa goldfields	*Lasthenia conjugens*	FE, CNPS 1B.2	Cismontane woodland, playas (alkaline), valley and foothill grassland, vernal pools. 0-470 m. Flowers March-April.	A	The BSA does not provide suitable habitat. This species was not observed during the surveys, which were conducted during the flowering period. No further actions are recommended for this species.
Beach layia	*Layia carnosa*	FE, SE, CNPS 1B.1	Sandy soil, coastal dunes, coastal scrub. 0-60 m. Flowers March-July.	A	All known occurrences of this species in the vicinity of the BSA are associated with coastal scrub and dunes. The BSA lacks suitable habitat. No further actions are recommended for this species.

Common Name	Scientific Name	Status	General Habitat Description	Habitat Present/ Absent	Rationale
Rose leptosiphon	*Leptosiphon rosaceus*	CNPS 1B.1	Coastal bluff scrub. 0-100 m. Flowers April-July.	A	All known occurrences of this species in the vicinity of the BSA are associated with coastal bluff scrub. The BSA lacks suitable habitat. No further actions are recommended for this species.
San Francisco lessingia	*Lessingia germanorum*	FE, SE, CNPS 1B.1	Coastal scrub (remnant dunes) 25-110 m. Flowers June-November.	A	The BSA lacks suitable habitat. No further actions are recommended for this species.
Tamalpais lessingia	*Lessingia micradenia var. micradenia*	CNPS 1B.2	Chaparral, valley and foothill grassland; usually located on serpentine substrate, often roadsides. 10-500 m. Flowers June-October.	A	The BSA lacks serpentine and suitable habitat. No further actions are recommended for this species.
Pitkin Marsh lily	*Lilium pardalinum* ssp. *pitkinense*	FE, SE, CNPS 1B.1	Cismontane woodland, meadows and seeps, marshes and swamps (freshwater), mesic and sandy. 35-65 m. Flowers June-July.	A	Known only from areas near Sebastopol. The mesic area in the BSA does not provide appropriate habitat. No further actions are recommended for this species.
Sebastopol meadowfoam	*Limnanthes vinculans*	FE, SE, CNPS 1B.1	Meadows and seeps, valley and foothill grassland, vernal pools, vernally mesic. 15-305 m. Flowers April-May.	A	The BSA lacks suitable grassland and vernal pool habitat. No further actions are recommended for this species.
Tidestrom's lupine	*Lupinus tidestromii*	FE, SE, CNPS 1B.1	Coastal dunes. 0-100 m. Flowers April-June.	A	All known occurrences of this species in the vicinity of the BSA are associated with coastal dunes. The BSA lacks suitable coastal dune habitat. No further actions are recommended for this species.
Marsh microseris	*Microseris paludosa*	CNPS 1B.2	Moist places, closed-cone coniferous forest, cismontane woodland, coastal scrub, valley and foothill grassland, (Moist grassland or open woodland). 5-300 m. Flowers April-June.	A	This species is typically found in areas that receive more sunlight than the site. It was not observed during the field surveys, which were conducted during the flowering period. No further actions are recommended for this species.

Common Name	Scientific Name	Status	General Habitat Description	Habitat Present/ Absent	Rationale
Elongate copper moss	*Mielichhoferia elongata*	CNPS 2B.2	Cismontane woodland/ metamorphic, rock typically with high levels of heavy metals, usually vernally mesic. 500-1300 m.	A	This species is often found along road cuts in the foothills. It was not observed during the field surveys. No further actions are recommended for this species.
Marin County navarretia	*Navarretia rosulata*	CNPS 1B.2	Rocky serpentinite soil, closed-cone coniferous forest, chaparral. 200-635 m. Flowers May-July.	A	All known occurrences of this species in the vicinity of the BSA are associated with serpentinite soil. The BSA lacks suitable habitat. No further actions are recommended for this species.
White-rayed pentachaeta	*Pentachaeta bellidiflora*	FE, SE, CNPS 1B.1	Valley and foothill grassland, coastal scrub, coastal prairie, open dry rocky areas, often serpentine. 35-620 m. Flowers March-May.	A	The BSA lacks suitable open dry rocky habit. This species was not observed during the field surveys, which were conducted during the flowering period. No further actions are recommended for this species.
Choris' popcorn-flower	*Plagiobothrys chorisianus* var. *chorisianus*	CNPS 1B.1	Moist places, coastal prairie, coastal scrub, chaparral, seasonal marsh. Known only from San Francisco southward. 60-485 m. Flowers March-June	A	The BSA lacks suitable habit. This species was not observed during the field surveys, which were conducted during the flowering period. No further actions are recommended for this species.
San Francisco popcorn-flower	*Plagiobothrys diffusus*	SE, CNPS 1B	Seasonally moist places, coastal prairie, valley and foothill grassland. Known only from San Francisco southward. 0-100 m. Flowers April-June.	A	The BSA lacks suitable habit. This species was not observed during the field surveys, which were conducted during the flowering period. No further actions are recommended for this species.
Hairless popcorn-flower	*Plagiobothrys glaber*	CNPS 1A	Alkaline meadows and seeps, coastal salt marshes.0-100 m. Flowers March-May	A	Historically occurred on grassy slopes with marine influence. The BSA lacks suitable habit. This species was not observed during the field surveys. No further actions are recommended for this species.
North coast semaphore grass	*Pleuropogon hooverianus*	BLMS, ST, CNPS 1B.1	Moist, open to shaded areas, broadleafed upland forest, meadows and seeps, north coast coniferous forest. Marshy areas.10-1,150 m. Flowers May-August.	A	The BSA lacks suitable habit. The creekbed is not vegetated and the banks are too dry. This species was not observed during the field surveys, which were conducted during the flowering period. No further actions are recommended for this species.

Common Name	Scientific Name	Status	General Habitat Description	Habitat Present/ Absent	Rationale
Oregon polemonium	*Polemonium carneum*	CNPS 2B.2	Coastal prairie, coastal scrub, lower montane coniferous forest. 0-1,830m. Flowers April-September.	A	The BSA lacks suitable habitat. This species was not observed during the field surveys, which was conducted during the flowering period. No further actions are recommended for this species.
Hickman's potentilla	*Potentilla hickmanii*	FE, SE, CNPS 1B.1	Coastal bluff scrub, closed-cone coniferous forest, meadows and seeps (vernally mesic), marshes and swamps (freshwater). 10-149 m. Flowers April-August.	A	The closest known occurrence is south of San Francisco. The BSA lacks suitable habitat. No further actions are recommended for this species.
Tamalpais oak	*Quercus parvula* var. *tamalpaisensis*	CNPS 1B.3	Lower montane coniferous forest. 100-750 m. Flowers March-April.	HP	Suitable habitat for this species may be present in the BSA. This species is a woody shrub, which if present, would have been observed during the field surveys. No further actions are recommended for this species.
Adobe sanicle	*Sanicula maritima*	USFSS, SE, CNPS 1B.1	Chaparral, coastal prairie, meadows and seeps, valley and foothill grassland, often clay and serpentine. 30-240 m. Flowers February-May.	A	Suitable clay and serpentine habitat for this species is not present in the BSA. The closest known occurrence is a population believed to be extinct, south of San Francisco. No further actions are recommended for this species.
Point Reyes checkerbloom	*Sidalcea calycosa* ssp. *rhizomata*	CNPS 1B.2	Freshwater marshes and swamps near the coast. 3-75 m. Flowers April-September.	A	All known occurrences of this species in the vicinity of the BSA are associated with marsh habitat. The BSA lacks suitable marsh habitat. No further actions are recommended for this species.
Marin checkerbloom	*Sidalcea hickmanii* ssp. *viridis*	CNPS 1B.3	Chaparral; located on serpentine or volcanic substrate; often observed following burns. 50-425 m. Flowers May-June.	A	All known occurrences of this species in the vicinity of the BSA are associated with serpentine or volcanic substrates. The BSA lacks suitable serpentine or volcanic substrate habitat. No further actions are recommended for this species.

Common Name	Scientific Name	Status	General Habitat Description	Habitat Present/ Absent	Rationale
San Francisco campion	*Silene verecunda* ssp. *verecunda*	CNPS 1B.2	Coastal bluff scrub, chaparral, coastal prairie, coastal scrub, valley and foothill grassland, often mudstone, one on serpentine. 30-645 m. Flowers March-August.	A	All known occurrences of this species in the vicinity of the BSA are associated with mudstone or serpentine in coastal scrub or bluff scrub, chaparral, coastal prairie or valley and foothill grassland. The BSA lacks suitable habitat. No further actions are recommended for this species.
Santa Cruz microseris	*Stebbinsoseris decipiens*	CNPS 1B.2	Open areas in broadleafed upland forest, closed-cone coniferous forest, chaparral, coastal prairie, coastal scrub, valley and foothill grassland. 30-645 m. Flowers April-May.	A	Limited suitable habitat for this species may be present in the BSA, however, this species was not observed during the field surveys, which were conducted during the flowering period. No further actions are recommended for this species.
Tamalpais jewel-flower	*Streptanthus batrachopus*	CNPS 1B.3	Serpentinite soil, chaparral, closed-cone coniferous forest. 305-650 m. Flowers April-June.	A	All known occurrences of this species in the vicinity of the BSA are associated with serpentine outcrops or openings. The BSA lacks suitable habitat. No further actions are recommended for this species.
Mt. Tamalpais bristly jewel-flower	*Streptanthus glandulosus* ssp. *pulchellus*	CNPS 1B.2	Serpentinite soil/talus, chaparral, valley and foothill grassland. 150-800 m. Flowers May-July.	A	All known occurrences of this species in the vicinity of the BSA are associated with serpentine outcrops or openings. The BSA lacks suitable habitat. No further actions are recommended for this species.
Tiburon jewel-flower	*Streptanthus glandulosus* ssp. *niger (previously Streptanthus niger)*	FE, SE, CNPS 1B.1	Serpentinite soil, valley and foothill grassland. 30-150 m. Flowers May-June.	A	All known occurrences of this species in the vicinity of the BSA are associated with willow rocky serpentine soil. The BSA lacks suitable habitat. No further actions are recommended for this species.
Suisun Marsh aster	*Symphyotrichum lentum*	CNPS 1B.2	Brackish and freshwater marshes and swamps.0-3 m. Flowers May-November.	A	All known occurrences of this species in the vicinity of the BSA are found along seasonally wet sloughs and marshes. The BSA lacks suitable habitat. No further actions are recommended for this species.

Common Name	Scientific Name	Status	General Habitat Description	Habitat Present/ Absent	Rationale
Two fork clover	*Trifolium amoenum*	FE, CNPS 1B.1	Coastal bluff scrub, valley and foothill grassland (sometimes serpentinite), open sunny sites.5-415 m. Flowers April-June.	A	All known occurrences of this species in the vicinity of the BSA are found in open sunny sites in chaparral and grassland. The BSA does not have suitable habitat. This species was not observed during the field surveys, which were conducted during the flowering period. No further actions are recommended for this species.
Saline clover	*Trifolium hydrophilum (*syn. *Trifolium depauperatum var. hydrophilum)*	CNPS 1B.2	Marshes and swamps, valley and foothill grassland (mesic, alkaline), vernal pools. 0-300 m. Flowers April-June.	A	All known occurrences of this species in the vicinity of the BSA are associated with alkaline or saline wetlands. The BSA lacks suitable habitat. No further actions are recommended for this species.
San Francisco owl's-clover	*Triphysaria floribunda*	CNPS 1B.2	Coastal prairie, coastal scrub, valley and foothill grassland, generally serpentinite soil.10-160 m. Flowers April-June.	A	The BSA does not provide suitable habitat. This species was not observed during the field surveys, which were conducted during the flowering period. No further actions are recommended for this species.
Coastal triquetrella	*Triquetrella californica*	CNPS 1B.2	Coastal prairie, coastal scrub. Grows within 30 meters of the coast on gravelly rocky soil. 30-150 m. Flowers May-June.	A	Known in CA from fewer than ten small coastal occurrences, and in in OR from only one occurrence. The BSA does not provide suitable habitat. No further actions are recommended for this species

Common Name	Scientific Name	Status	General Habitat Description	Habitat Present/ Absent	Rationale

* Key to status codes:

FE	Federal Endangered
FT	Federal Threatened
FD	Federal Delisted
FC	Federal Candidate
BCC	USFWS Birds of Conservation Concern
MMPA	Species protected under the Marine Mammal Protection Act
SE	State Endangered
ST	State Threatened
SR	State Rare
SSC	CDFW Species of Special Concern
CFP	CDFW Fully Protected Animal
WBWG	Western Bat Working Group (High or Medium) Priority species
BLMS	Bureau of Land Management Sensitive Species
USFSS	U.S. Forest Service Sensitive Species
CNPS 1A	CNPS Rare Plant Rank 1A: Plants presumed extirpated in California and either rare or extinct elsewhere
CNPS 1B	CNPS Rare Plant Rank 1B: Plants rare, threatened, or endangered in California and elsewhere
CNPS 2A	CNPS Rare Plant Rank 2A: Plants presumed extirpated in California, but more common elsewhere
CNPS 2B	CNPS Rare Plant Rank 2B: Plants rare, threatened, or endangered in California, but more common elsewhere
CNPS 3	CNPS are Plant Rank 3: Plants about which more information is needed – a review list
CNPS 4	CNPS Rare Plant Rank 4: Plants of limited distribution – a watch list

CNPS Rare Plant Threat Ranks

0.1-Seriously threatened in California (over 80% of occurrences threatened / high degree and immediacy of threat)
0.2-Moderately threatened in California (20-80% occurrences threatened / moderate degree and immediacy of threat)
0.3-Not very threatened in California (<20% of occurrences threatened / low degree and immediacy of threat or no current threats known)

*Presence:
Absent [A] - no habitat present and no further work needed.
Habitat Present [HP] -habitat is, or may be present. The species may be present.
Present [P] - the species is present.
Critical Habitat [CH] - proposed project footprint is located within a designated critical habitat unit, but does not necessarily mean that appropriate habitat is *present.*

Chapter 4 – Results: Biological Resources, Discussion of Impacts and Mitigation

Habitats and Natural Communities of Special Concern

Habitats are considered to be of special concern based on (1) federal, state, or local laws regulating their development; (2) limited distributions; and/or (3) the habitat requirements of special-status plants or animals occurring on site. Two natural communities of special concern were found to be present in the BSA, Riparian Redwood Forest and Intermittent Stream (CWA "Other Waters"). These communities are summarized in Table 2 and discussed below, and shown on the Biological Communities Map Figure 3a. The "Other Waters" is also considered sensitive by federal and state agencies, due to the regulatory aspects discussed in more detail in Chapter 2, above and in the Jurisdictional Delineation Report.

Figure 3b shows the proposed project's impact areas. The following sections present a discussion of the impacts and mitigation for each natural community of special concern. Permanent impacts are a conversion of a natural community to structures such as, bridge support or to an area of engineered slope stabilization. Temporary impacts are disturbances to existing natural communities that would be restored to the same natural community type following construction.

Table 2: Direct Impacts of the Proposed Project to Natural Communities of Special Concern.

Natural Community of Special Concern	Permanent Impacts	Temporary Impacts
Riparian Redwood Forest	0 ft^2	0 ft^2
Intermittent Stream "Other Waters"	0 ft^2/ 0 linear feet	0.001 acre (55 ft^2)/ 12 linear feet
Total (and Total for Critical Habitat for CCC steelhead and Coho salmon.)	0 acre (0 ft^2)	0.001 acre (55 ft^2)

Table 3: Direct Impacts of the Proposed Project to Jurisdictional Areas by Agency.

Agencies Jurisdiction	Permanent Impacts	Temporary Impacts
CDFW (creek bed and bank)	<0.01 acre (110 ft^2)	0.001 acre (55 ft^2)
USACE and RWQCB (creek bed)	0 acre 0 ft^2)	0.001 acre (55 ft^2)
NMFS (creek bed and bank because of critical habitat)	0 acre (0 ft^2)	0.001 acre (55 ft^2)

This page intentionally left blank

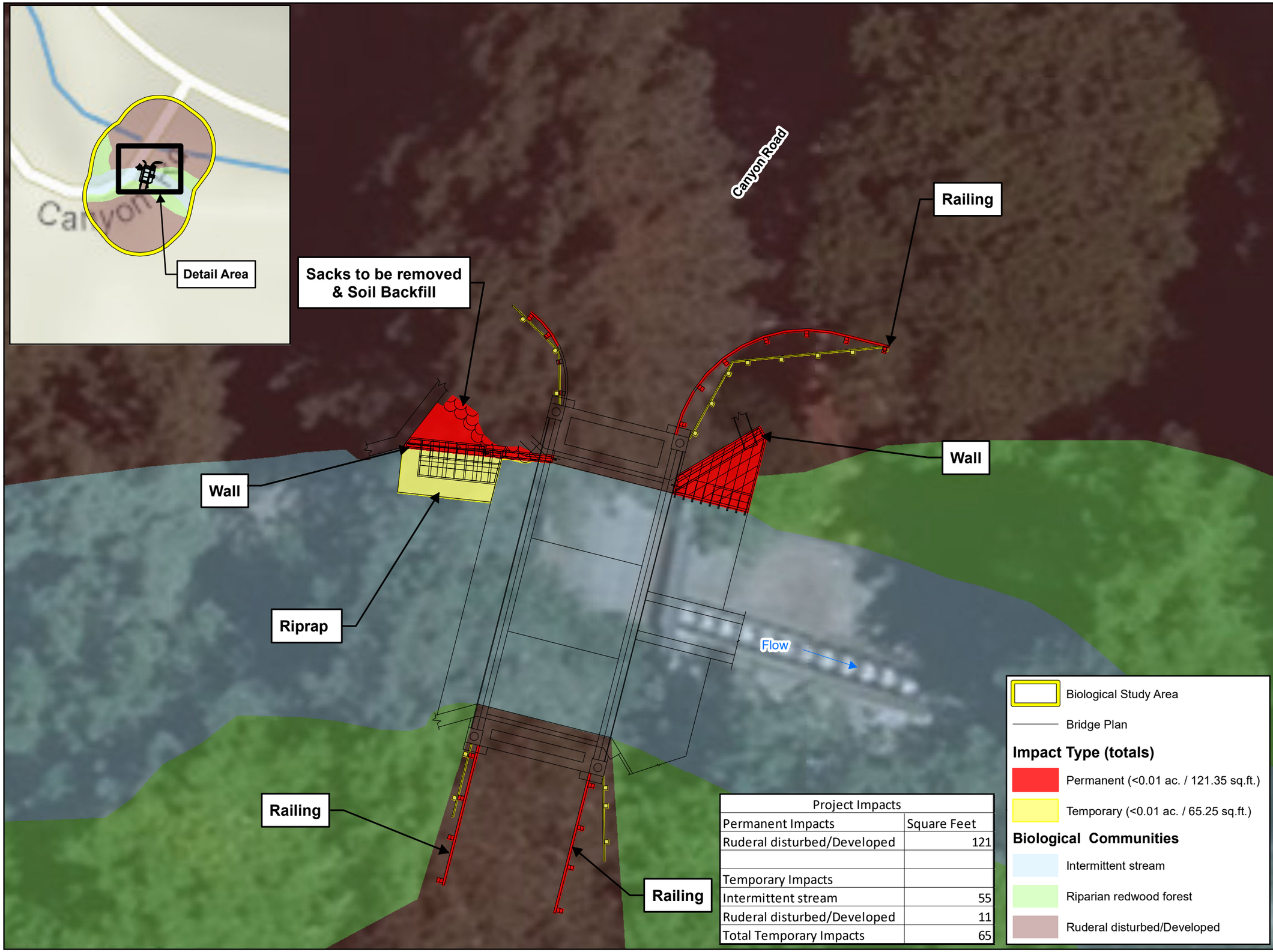

Project Impacts	
Permanent Impacts	Square Feet
Ruderal disturbed/Developed	121
Temporary Impacts	
Intermittent stream	55
Ruderal disturbed/Developed	11
Total Temporary Impacts	65

wra
ENVIRONMENTAL CONSULTANTS

Bridge Preventative Maintenance Program

Canyon Road Bridge NES

Marin County, California

Figure 3b. Biological Communities Impacted within the Biological Study Area

N W E S

0 5 10 20
Feet

Map Date: 5/15/2017
Map By: smortensen
Data Source: WRA,
Base Map: ESRI Streaming Imagery

Path: L:\Acad 2000 Files\22000\22304\GIS\ArcMap\BPMP\Canyon Road Bridge\2017\Fig3b_Impacts_20170425.mxd

This page intentionally left blank

RIPARIAN REDWOOD FOREST

Riparian Redwood Forest Survey Results

Upland plant communities in the BSA are comprised of Ruderal Disturbed/Developed, which is not a habitat of concern, and Riparian Redwood Forest, which is discussed here. The Riparian Redwood Forest is similar to the *Sequoia Sempervirens* Forest Alliance (G3, S3.2, Sawyer, J., T. Keeler-Wolf and J. Evens. 2009). The G3 S3.2 ranking indicate that it is considered a natural community of special concern (sensitive) at the state and global level; though the Redwood Forest plant community is prevalent along California's northern coast. The overstory consists of native tree species (such as redwood, big leaf maple, and California bay). The term 'riparian' is used here as a descriptor to indicate the slightly more mesic conditions within the stream's general influence. It should be noted that the plant community would be considered a forest rather than a traditional riparian zone because of the lack of willows, alders, or other typical riparian species. There is a cluster of three redwood trees conjoined at the base adjacent to the northwest wing wall. This cluster is within the Ruderal Disturbed/Developed community and is presumed planted based on location between an existing house and bridge structures. In addition, an arborist has examined these trees and provided recommendations. In general, the proper stabilization of the wingwall is expected to protect the trees. Riparian Redwood Forest is avoided by the proposed project (Figure 3b), and no Riparian Redwood Forest is anticipated to be impacted by the proposed project.

Riparian Redwood Forest Avoidance and Minimization Efforts

The Riparian Redwood Forest community is avoided by the proposed project, and no Riparian Redwood Forest is anticipated to be impacted by the proposed project. Although the redwood tree cluster is not within the Riparian Redwood Forest community, the following avoidance and minimization measures will be employed to avoid or minimize impacts to the greatest extent possible:

- The proposed Canyon Road Bridge work has been designed to avoid impacts to trees to the maximum extent feasible. An arborist has provided professional advice on the best approach to protecting the redwoods that are near the wingwall proposed to be replaced. The soil nails are not expected to damage the trees roots. The expansion joints in the new wingwall would help the wall withstand the force of continued root growth,
- Silt fencing or other approved sediment trapping will be installed down gradient of the work site to minimize off-site transport of sediments.
- Exclusion fencing will be installed along the limits of clearing and grubbing to prevent encroachment into undisturbed habitats.

Riparian Redwood Forest Project Impacts

As summarized in Table 2 above, no permanent impacts and no temporary impacts to Riparian Redwood Forest are anticipated as a result of proposed project construction. Tree trimming is currently not anticipated, but may result in discountable temporary direct effects, if needed, for construction access. The redwood trees will be protected during removal of the concrete sacks and soil nails are not expected to damage roots. Minor temporary indirect impacts to Riparian Redwood Forest may result from construction activities including increased dust deposition on adjacent vegetation.

Riparian Redwood Forest Compensatory Mitigation

The proposed project avoids the Riparian Redwood Forest community. No temporary impacts to this natural community are anticipated from the proposed project. No permanent direct or indirect, or temporary direct or indirect impacts to typical riparian tree species such as alders or willows are proposed.

Riparian Redwood Forest Cumulative Impacts

No future public or private activities are known to be planned or reasonably foreseen for the BSA vicinity. Therefore, cumulative effects are not anticipated for this proposed project.

INTERMITTENT STREAM ("OTHER WATERS")

Intermittent Stream ("Other Waters" Survey Results

The streambed consists of the Intermittent Stream Biological Community, which is comprised of approximately 0.22 acre (320 linear feet) of "other waters". There are no wetlands in the BSA. Flows vary with the rainfall patterns of a given year. The watershed that drains into the creek consists of the western part of the Town of Fairfax and adjacent open space lands. Flows within the creek during the March 2016 site visit extended to the edges of the creek bed. During site visits in spring 2015 flows were minimal to absent. Though, there were a few remnant small pools that held water. In addition to slope change at the bed and bank junction, wrack observed at the edge of the creek bed was used as an indication of OHW mark. The substrate under the bridge and extending roughly 40 feet downstream of the bridge consists of a concrete apron with a metal fish ladder seated in it. Downstream of the fish ladder are numerous chunks of concrete. The remaining areas upstream and downstream are a mix of small gravel to larger cobble. The channel width at the OHW mark was used to determine the Intermittent Stream ("other waters") boundary shown on Figure 3a. The creek is not included on the National System of Wild and Scenic Rivers published by the U.S. Department of the Interior. The banks under the existing bridge are poured concrete, just upstream of the bridge on the northwest side is a concrete sack retaining wall.

Pursuant to the Clean Water Act Section 404 and 401 the creek below OHW would be within the USACE and RWCQB jurisdiction. It would also be protected by Porter Cologne (RWQCB). There are no areas in the BSA that would be considered only Waters of the State (not Waters of the US).

Intermittent Stream Avoidance and Minimization Efforts

The following measures are included to avoid and/or minimize and restore potential impacts to creek habitat resulting from the use of mechanical equipment in the creek bed.

- The primary construction will be completed during the dry season, between April 15 and October 15, and work within the creek bed and banks will occur when the work area is dry.
- Final grading in the creek bed will conform to the existing creek channel both downstream and upstream (except in the areas of permanent fill), and existing bed materials will be replaced with similar sized materials.
- Regulatory approval will be obtained for all work within potential jurisdictional areas, including approval from the USACE, RWQCB, CDFW, and NMFS. All work within these areas will conform to any conditions imposed by the regulating agencies.

- Prior to any clearing, grubbing, pruning, or groundbreaking activity, the limits of construction will be fenced with temporary high-visibility construction fencing to protect environmentally sensitive areas, to prevent any equipment from unnecessarily extending the work area or entering the creekbed. In addition, silt fencing will be installed at the base of the construction fencing to prevent debris from entering the creek. All fencing will be removed upon project completion.
- Prior to construction, the contractor will be required to prepare an Accidental Spill Prevention and Cleanup Plan.
- To minimize fluid leaks during operation, refueling, and maintenance of stationary equipment spill control absorbent material will be in place underneath this equipment at all times to capture potential leaks. All refueling and maintenance of equipment, other than stationary equipment, will occur outside the creek's top-of-bank. Any hazardous chemical spills will be cleaned immediately.
- All stockpiling of construction materials, equipment, and supplies, including storage of chemicals, refueling and maintenance, will occur outside the creek channel. No equipment will be washed where runoff could enter the creek.
- No motorized equipment is to be left within the channel (top of bank to top of bank) overnight, unless a container or similar method is securely placed beneath the equipment to catch any fluid leakage. All contained fluids will be disposed of in a permitted manner.
- The contractor will be required to use a drilling mud and slurry seal that is nontoxic to aquatic life if there are drilling activities related to construction of the proposed project. All drilling muds and fluid will be contained on-site in tanks and disposed of in a permitted manner. Fluids from saw cutting and other activities will be collected and not allowed to flow into the creek.
- No equipment, including concrete trucks, will be washed within the channel of the creek, or where wash water could flow into the channel. Prior to proposed project construction, the contractor will establish a concrete washout area for concrete trucks in a location where wash water will not enter the creek or adjacent areas. The washout area will follow the practices outlined in the San Francisco Bay Regional Water Quality Control Board Erosion and Sediment Control Field Manual (page 107-108, July 1999) or more recent guidelines. Substitution of the designated concrete washout area or methods will require prior approval of the Town of Fairfax.
- All water that comes in contact with wet concrete must be pumped directly into tanks and disposed of at a permitted location.
- If work is to occur on the roadway and bridge approaches during the period October 15 to June 15, all drainage inlets within the proposed project site will be protected from receiving polluted storm water through the use of filters such as fabrics, gravel bags, straw wattles, or other appropriate BMPs.
- Water encountered during construction of the bridge foundations will be managed in accordance with an approved dewatering plan.
- All workers will ensure that food scraps, paper wrappers, food containers, cans, bottles, and other trash from the BSA are deposited in covered or closed trash containers. The trash containers will not be left open and unattended overnight.
- The Town of Fairfax will require that all disturbed areas in the stream channel be re-graded to match the surrounding topography by October 15. Seed and certified weed-free straw will be placed on disturbed areas in the proposed project site (with the exception of the lower creek banks, creek bed, and areas below the OHW mark). A jute mesh type or equivalent matting will be placed over the straw, installed per the

manufacturer's instructions. This matting will have no plastic incorporated into it. Substitution of materials or erosion control methods will require prior approval of the Town of Fairfax.

- After construction, the proposed project site will be inspected following the first heavy rain, during the middle of the rainy season and at the end of the rainy season. During each visit areas of significant erosion or erosion control device failure will be noted and appropriate remedial actions taken.

With the implementation of these measures, it is expected that the proposed project will not result in substantial adverse impacts to creek habitat.

Special-Status Plant Species

Based upon a review of the resources and databases discussed in Section 2, 77 special-status plant species have been documented in the vicinity of the BSA. No critical habitat for special-status plants exists within the proposed project area. Table 1 discusses the potential for each of the special-status plant species to occur in the BSA. Suitable habitat is present in the BSA for 6 of the species. Key points regarding those species are summarized here.

- Napa false indigo (*Amorpha californica* var. *napensis,* CNPS 1B.2). Woodland habitat within the BSA could support this species. However, this shrub species, which is easily identifiable, was not observed during the field surveys.
- Seaside bittercress (*Cardamine angulata,* CNPS 2B.1). This perennial species was not observed during the field surveys, which were conducted during the flowering period. The closest recorded occurrence of this species is a 1915 observation near the Town of Lagunitas, over 5 miles away.
- Western leatherwood (*Dirca occidentalis,* CNPS 1B.2). Woodland habitat within the BSA could support this species. However, this woody perennial species, which is typically over 3 feet tall was not observed during the field surveys.
- Minute pocket moss (*Fissidens pauperculus,* USFSS, CNPS 1B.2). Mesic substrates within the BSA may have the potential to support this species. This species was not observed during the field surveys; though, a common member of the same genus was found (*Fissidens crispus*).
- Marin checker lily (*Fritillaria lanceolata* var*. tristulis,* CNPS 1B.1). Though not coastal, there is riparian habitat within the BSA. No *Fritillaria* (a perennial bulbiferous herb) were observed during the field surveys, which were conducted during the flowering period.
- Tamalpais oak (*Quercus parvula* var. *tamalpaisensis,* CNPS 1B.3). Though, the BSA provides potential habitat, this species is a woody shrub, which would have been identifiable during the site visits. No shrubby oaks were observed during the field surveys.

The remaining special-status plant species documented in the vicinity are unlikely to occur in the BSA based on lack of suitable habitats (such as coastal dunes, coastal prairie, coastal salt marsh or vernal pools) or specific substrates (i.e. serpentine, volcanic rock). The BSA is in a residential area, with structures (houses, sheds, etc.), fenced backyards, and landscape areas nearby. Most of the creek bank (below the top of bank) is sparsely vegetated. There are a few dense patches of English ivy and Himalayan blackberry. The areas that are not vegetated, are bare dirt, rock, or duff. The creek bed is generally unvegetated.

No special-status plant species were observed in the BSA during floristic surveys completed during the appropriate flowering periods. No effects on special-status plant species are anticipated and no further discussion of special-status plant species is necessary.

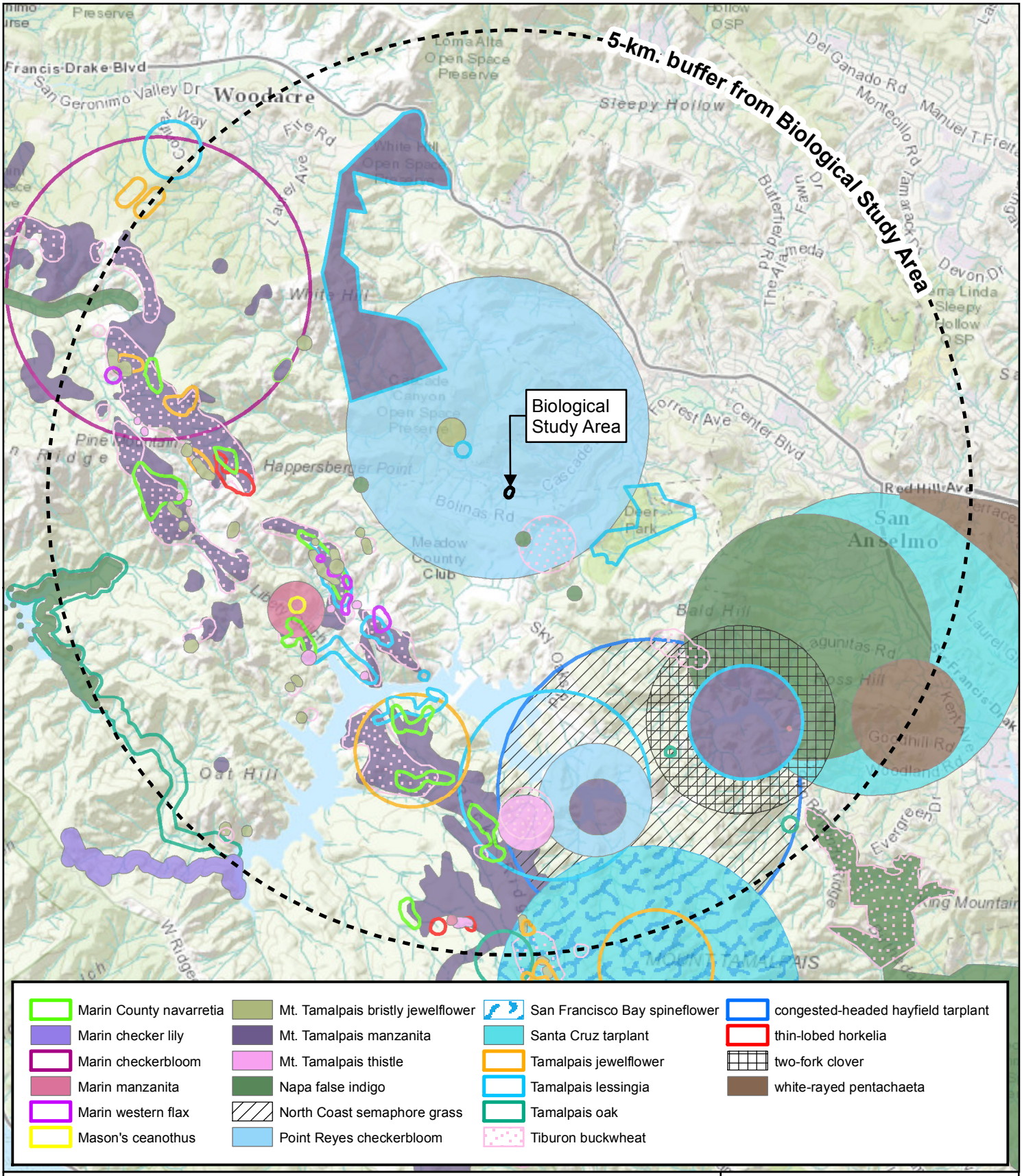

Figure 4. Special-status Plant Species Occurrences within 5 Kilometers of the Biological Study Area

Bridge Preventative Maintenance Program
Canyon Road Bridge NES
Marin County, California

0 0.5 1
Miles

ENVIRONMENTAL CONSULTANTS

Map Prepared Date: 3/30/2016
Map Prepared By: dchan
Base Source:
Data Source(s): WRA

Path: L:\Acad 2000 Files\22000\22304\GIS\ArcMap\BPMP\Canyon Road Bridge\Fig4_Canyon_CNDDB_Plants_20160329.mxd

This page intentionally left blank

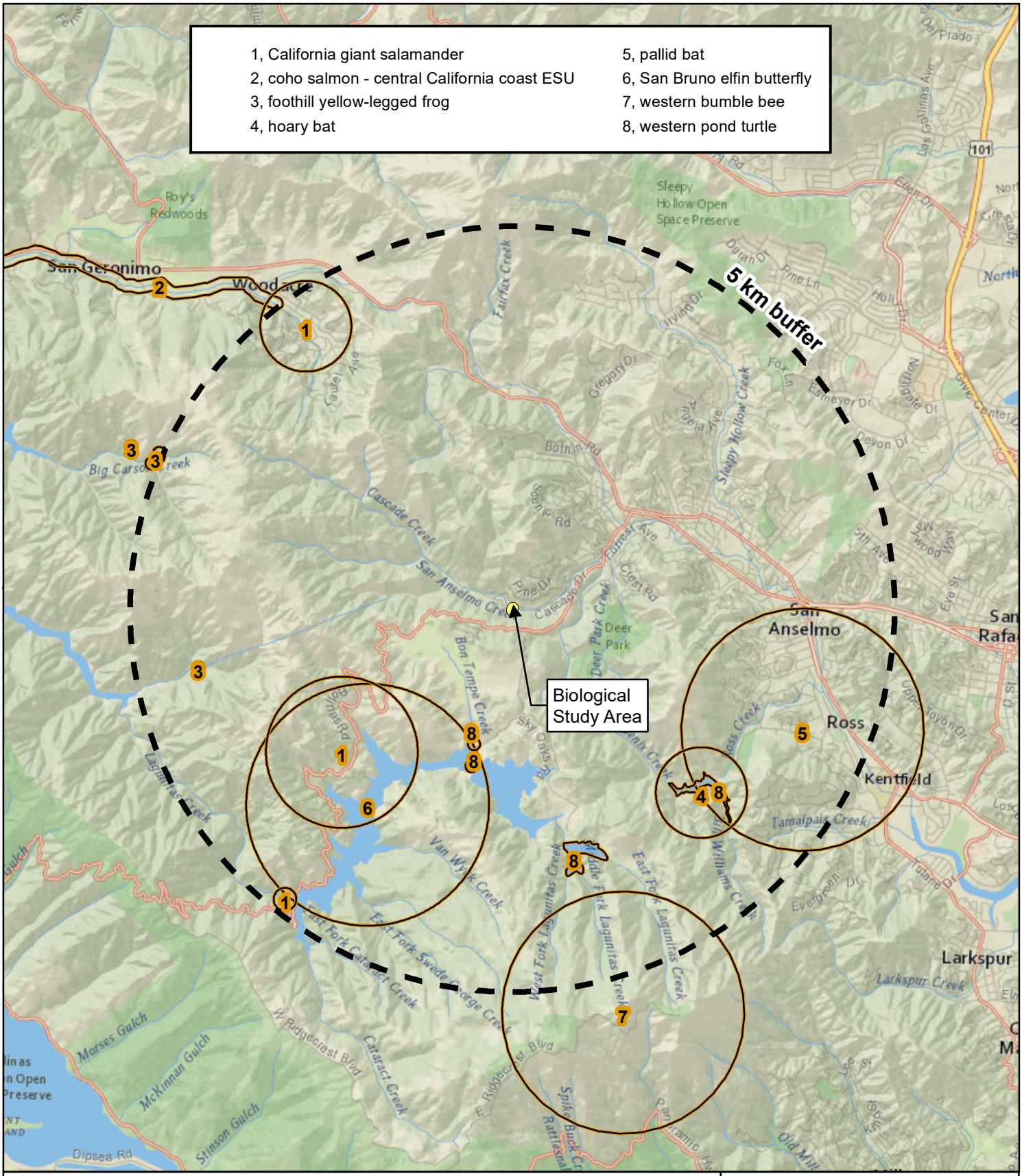

Figure 4. Special-status Wildlife Species Occurrences within 5 kilometers of the Biological Study Area

Bridge Preventative Maintenance Program
Canyon Road Bridge NES
Marin County, California

0 0.5 1 2
Miles

wra
ENVIRONMENTAL CONSULTANTS

Map Prepared Date: 5/8/2017
Map Prepared By: pkobylarz
Base Source: Esri Streaming - National Geographic
Data Source(s): WRA, CNDDB April 2017

Path: L:\Acad 2000 Files\22000\22304\GIS\ArcMap\BPMP\Canyon Road Bridge\2017\Fig5_Canyon_CNDDB_Wildlife5km_20170425.mxd

This page intentionally left blank

Special-Status Wildlife Species

Ninety-one special-status wildlife species have been documented in the background literature as potentially occurring in the quadrangles or noted in a review of other resources as having overlapping ranges and habitat requirements (Table 1). Eight of these special-status wildlife species have been documented in CNDDB within 8 kilometers (5 miles), and those documented within 5 kilometers (3.1 miles) of the BSA are shown in Figure 5 (CDFW 2017a).

The segment of San Anselmo Creek which runs through the BSA is designated critical habitat for both Coho salmon (64 FR 24049, 73 FR 7816) and CCC steelhead (70 FR 52488, 70 FR 52630), and EFH for Pacific Salmonids. Coho salmon is considered extirpated from San Francisco Bay and all of its tributaries, thus they will not be affected by the proposed project (NMFS 2012, Brown and Moyle 1991). However, CCC steelhead are presumed present in San Anselmo Creek (UC Davis 2017). All work will be conducted when the creek is dry, such that no temporary effects to steelhead or its critical habitat are anticipated. Following implementation of avoidance and minimization measures outlined in the section below, the proposed project is anticipated to have no permanent adverse effect on steelhead, critical habitat, or EFH.

Coniferous forest adjacent to the BSA has documented occurrences of nesting NSO (CDFW 2017b). The BSA itself does not provide suitable nesting habitat for NSO, and no trees within or adjacent to the BSA are anticipated to be removed for the proposed project, and following the implementation of avoidance and minimization measures outlined in the section below, the proposed project is anticipated to have no permanent adverse effect to NSO.

Of the 91 special-status wildlife species documented to occur in the vicinity, seven species have potential to occur within the BSA. The remaining 84 species identified in Table 1 are unlikely to occur within the BSA because of existing conditions within and surrounding the BSA. Roadways, residential development, and various anthropogenic disturbances reduce the amount of available breeding, rearing, foraging, and refugia habitat for most special-status species. Several habitat types or habitat conditions which are required to support special-status wildlife species are also absent from the BSA, such as marsh, open grassland, woodland riparian, and serpentine habitats.

Trees within the BSA are primarily California bay and small redwoods which do not provide cavities or complex foliage required to support tree roosting bats. The underside of the bridge structure is also solid with no gaps, openings, or seams which could potentially be used by roosting bats. The BSA also receives a high level of human disturbance from the residences and traffic in the vicinity further reducing the potential for special-status bat species such as Townsend's big-eared bat (*Corynorhinus townsendii*) to occur within the BSA. This species is highly sensitive to disturbance at roost sites. The absence of roost sites and other habitat features within the BSA makes the presence of special-status bats or other bat species unlikely. Additionally, no trees are anticipated to be removed for the project. Therefore, the project will have no effect on roosting bats.

Special-status amphibian and reptile species such as foothill yellow-legged frog (*Rana boylii*), California red-legged frog (*Rana draytonii*), California giant salamander (*Dicamptodon ensatus*), and western pond turtle (*Actinemys marmorata*) are also unlikely to occur. No occurrences of these species have been documented within the watershed, and California red-legged frog is not known within this portion of Marin County nor has it been documented within 5 miles of the BSA (CDFW 2017a). Nearby occurrences of foothill yellow-legged frog and western pond turtle are located outside the watershed and are greater than 2 miles from the BSA (CDFW 2017a). In addition, the BSA lacks suitable pool habitat and sufficient water levels during the breeding season for foothill yellow-legged frog; therefore, it does not contain suitable breeding habitat for this species. The BSA also lacks an open canopy where significant sunlight can penetrate to the

water as well as suitable basking and upland habitats for western pond turtle. California giant salamander, is not documented within San Anselmo Creek and the lack of perennial water and refugia in the BSA preclude presence of this species. The developed banks lack underground refugia for adults. The lack of nearby occurrences and suitable habitat within the BSA make it unlikely most special-status amphibian and reptile species will occur within the BSA; thus, the project will have no effect on foothill yellow-legged frog, California red-legged frog, California giant salamander, or western pond turtle.

Based on the habitat conditions present on the BSA and documented range and occurrence information for special-status wildlife species (CDFW 2017a and 2017b), it was determined that in addition to CCC steelhead and NSO, the BSA contains potential habitat for five other special-status or protected wildlife species including: Allen's hummingbird (*Selasphorus sasin*), purple martin (*Progne subis*), olive-sided flycatcher (*Contopus cooperi*), oak titmouse (*Baeolophus inornatus*), and Nuttall's woodpecker (*Picoides nuttallii*). The BSA also has potential to support non-special-status nesting birds. These species and their potential for occurrence in the BSA are discussed in further detail below.

NORTHERN SPOTTED OWL

The NSO is a federally threatened and state threatened resident spotted owl subspecies found in cool temperate forests in the coastal portion of California, from Marin County northward. The natural history of this subspecies is summarized by the U.S. Fish and Wildlife Service (USFWS 2008) and Gutiérrez et al. (1995). Typical habitat consists of old-growth coniferous forests, or mixed stands of old-growth and mature trees; younger (second-growth) forests with patches of large trees are also occasionally used. High-quality year-round habitat features a tall, multi-tiered, multi-species canopy dominated by big trees, trees with cavities and/or broken tops, and woody debris and space under the canopy. NSO breeding pairs are usually monogamous and also demonstrate site fidelity, maintaining nesting territories and home ranges across years. The general breeding season is February through August, and nesting occurs on platform-like substrates in the forest canopy. Substrates used as nest sites include tree cavities, broken tree tops, epicormic branching (i.e., multiple branches forming from a single node), large horizontal branches, and old nests built by other birds or squirrels. While NSO nesting occurs predominantly in coniferous trees throughout its range, the population in Marin County is somewhat more generalist and has also been documented to use hardwoods for nesting (Chow 2001). Within Marin County, NSO young leave the nest (by gliding and climbing through the canopy) in late May through June, though they remain dependent on their parents for several weeks thereafter as they learn how to fly and forage independently. NSOs forage for nocturnal mammals; dusky-footed woodrats (*Neotoma fuscipes*) are the primary prey in northern California.

Survey Results

Within the BSA, the riparian redwood forest habitat consists primarily of California bay trees and small redwoods. This forest is low density within and directly adjacent to the BSA because of the presence of creek channel and development in the immediate area. However, dense, undeveloped coniferous forest is located adjacent to the BSA to the south and upslope.

Per the CDFW Spotted Owl Viewer database (CDFW 2017b), there are 38 documented NSO observations between the years 1998 and 2014 within 0.25 mile of the Study Area. All of these observations are located within entirely forested areas approximately 175-700 feet south of the BSA. NSO have been documented to nest in several different trees in this area in 2000, 2001, 2003, 2005, 2006, 2009, and 2011.

No NSOs or indication of presence of this species (e.g., pellets or feces stains below potential nest or roost sites) were observed during the March 2016 site visit. Within the BSA, the canopy is more open and trees do not contain platform-like structures that are found in adjacent forest to the south of the BSA. The trees within the BSA are therefore unlikely to support nesting NSO. Although NSOs in the area are unlikely to nest within the BSA, they may use the BSA as foraging habitat. The area of forest containing documented occurrences of NSO south of the BSA was not investigated during the site visit. However, available aerial photography suggests that these areas feature contiguous stands of primarily older, larger conifers that provide more typical NSO habitat (Google Earth 2017).

The USFWS has published guidance on acoustic and visual disturbances for NSO (USFWS 2006). The term “disturbance-only” describes projects that will not impact NSO habitat directly, but will generate acoustic and/or visible disturbances potentially leading to nest abandonment. For such projects, potential NSO habitat areas within 0.25 mile (1,320 feet) of such disturbance point-sources are included in impact analyses (USFWS 2011). Because no trees are anticipated to be removed as part of the proposed Project, there will be no impacts to the amount of NSO habitat in and around the BSA and the proposed Project is considered “disturbance only.”

Regarding visual disturbances, USFWS (2006) provides a general setback distance of 131 feet from active nests (i.e., those with eggs or young, or being attended by adults in preparation for nesting). The BSA is equal to or greater than 175 feet from the nearest documented nest tree, and is thus beyond the visual disturbance setback. Additionally, no trees within 131 feet of the BSA are likely to be used as nest trees due to a lack of platform-like tree structures and densely wooded vegetation characteristics. Thus, it is unlikely that NSO will nest within the 131-foot visual disturbance zone.

Ambient acoustic conditions during the site visit averaged approximately 54 decibels, with a maximum reading of 79 decibels. Anthropogenic activities within the vicinity of the BSA included noise from residential properties and vehicle traffic over the Canyon Road Bridge. A summary of potential project-generated disturbances that would likely provide the highest decibel levels and their “relative sound level” is provided in Table 4 below. Also included are ambient decibel levels that were observed during the site visit.

The USFWS (2006) provides an acoustic analysis matrix that compares ambient conditions to project conditions, and then derives an estimated linear distance from disturbance point-sources at which nesting NSOs have been documented (and/or should be expected) to be harassed/disturbed (Table 4). The harassment distance is the minimum buffer necessary to avoid acoustic impacts to an active NSO nest.

The potential acoustics of bridge maintenance have an average relative sound level of “High.” In contrast, average ambient conditions in the immediate vicinity of the BSA appear to be “Very Low” to “Moderate.” Using a conservative approach in which ambient conditions are considered with an average level of 54 decibels, or “Very Low,” and proposed project conditions considered “High”, the estimated harassment distance is 330 feet. However, ambient sound levels were often observed to be in the “Low” pre-project sound levels which would result in an estimated harassment distance of 165 feet. The nearest documented NSO nesting occurrence is located approximately 175 feet south of the BSA. The BSA may be within the area of potential acoustic impact if “Very Low” or “Natural Ambient” ambient sound levels are used as the basis for existing conditions and dependent upon nest location in the year of construction.

Table 4. Acoustic disturbance analysis for NSO as per USFWS (2006)

Disturbance regime	Disturbance	Decibel level ("standardized")	Relative sound level
	Yelling	70	Moderate
	Flatbed pickup truck	77	Moderate
	Generator (low end)	78	Moderate
	Backhoe (high end)	84	High
	Generator (high end)	84	High
	Concrete mixer (high end)	85	High
	Pumps, generators, compressors (high end)	87	High
	Jackhammer	89	High
	Medium construction (high end)	89	High
Ambient (existing conditions)	Power tool use from adjacent properties, light vehicle traffic, birds singing, wind.	45 - 79 (measured during the March 15, 2016 site visit)	Natural Ambient to Moderate

Table 5. Estimated harassment distance due to elevated action-generated sound levels for proposed actions affecting NSO, by sound level (USFWS 2006)

Existing (ambient) pre-project sound level (dB) [1,2]	Anticipated action-generated sound level (dB) [2,3]			
	Moderate (71-80)	High (81-90)	Very High (91-100)	Extreme (101-110)
"Natural Ambient"[4] (<=50)	165 feet	500 feet	1,320 feet	1,320 feet
Very Low (51-60)	0 feet	330 feet	825 feet	1,320 feet
Low (61-70)	0 feet	165 feet [5]	825 feet	1,320 feet
Moderate (71-80)	0 feet	165 feet	330 feet	1,320 feet
High (81-90)	0 feet	165 feet	165 feet	500 feet

[1] Existing (ambient) sound levels includes all natural and human-induced sounds occurring at the project site prior to the proposed action, and are not casually related to the proposed action.
[2] Sound levels provided in USFWS technical guidance document.
[3] Action-generated sound levels are given in decibels (dB) experienced by a receiver, when measured or estimated at 50 feet from the sound source.
[4] "Natural Ambient" refers to sound levels generally experienced in habitats not substantially influenced by human activities.
[5] Estimated dB level of proposed project activities, by estimated by dB level of natural ambient sound.

Avoidance and Minimization

Although the BSA does not contain habitat suitable for nesting NSO, NSO that nest in forest adjacent to the BSA may be affected by noise from proposed project activities during nesting.

The following measures will be implemented to avoid and minimize potential project impacts to NSO:

- Final avoidance and minimization measures will be determined in consultation with the USFWS to ensure project design including avoidance and minimization measures do not result in adverse effects to NSO.
- Work within the BSA will be conducted outside the nesting season (September 1 through January 31) to avoid disrupting nesting NSO within and adjacent to the BSA. Work outside of this period during the nesting season will require protocol-level surveys to determine nesting status and location and consultation with the USFWS and CDFW.
- If work within the BSA must occur during the nesting season (February 1 through August 31), protocol-level surveys in accordance with the USFWS Protocol for Surveying Proposed Management Activities that may Impact Northern Spotted Owls (2012). For "disturbance only" projects (see Project Impacts section below), six surveys will be required during the nesting season of the BSA and the surrounding 0.25-mile area (survey area).
- If protocol-level surveys indicate that NSOs are nesting within the potential acoustic impact distance to be determined in consultation with the USFWS, project work may not commence until the end of the nesting season, i.e. September 1.
- If protocol-level surveys determine that NSO are not nesting or not nesting within the potential acoustic impact zone during the year of the surveys, project work may commence June 1. June 1 is the earliest date non-nesting status can be confirmed.
- If project work begins in the non-nesting season and is to continue into the nesting season, project work will cease January 31 and will not recommence until protocol-level surveys as described above determine the nesting status of the survey area.

Project Impacts

No trees will be removed by the proposed project. Project construction may result in temporary acoustic impacts to nesting NSO in the vicinity; however, no permanent impacts are anticipated. The BSA is not visible from documented occurrences of NSO in the vicinity and NSO is unlikely to nest within the 131-foot visual buffer zone of the BSA because of a lack of suitable nest trees. Thus, no visual disturbances to nesting NSO will occur from the proposed project. The proposed project will either be scheduled outside of the nesting season from September 1 to January 31, or protocol-level surveys will occur during the nesting season prior to construction. If survey results indicate that NSO are nesting within the exclusion zone distance of the BSA, no construction activities will occur until the end of the nesting season.

The proposed project will not result in loss of habitat for NSO, and implementation of avoidance and minimization measures will prevent acoustic impacts to NSO that may nest nearby. Therefore, the proposed project **may affect, but is not likely to adversely affect** NSO.

Cumulative Impacts

No future public or private activities are known to be planned or reasonably foreseen for the BSA. The proposed project does not include any additional activities beyond those discussed in this document. Therefore, cumulative effects on NSO are not anticipated for the proposed project.

STEELHEAD, CRITICAL HABITAT, EFH, AND FISH PASSAGE

The CCC steelhead Distinct Population Segment (DPS) is federally threatened. This steelhead DPS includes all naturally spawned populations of steelhead and their progeny in California streams from the Russian River to Aptos Creek and the drainages of the San Francisco and San Pablo bays westward to and including the Napa River, excluding the Sacramento-San Joaquin River Basin.

Steelhead typically migrate to marine waters after spending 2 years (although up to 7) in freshwater. They then reside in marine waters for 2 to 3 years prior to returning to their natal stream to spawn as 4- or 5-year-olds. Steelhead adults typically spawn between December and June. In California, females generally spawn two times before they die. Preferred spawning habitat for steelhead is composed of perennial streams with cool to cold water temperatures, high dissolved oxygen levels, and fast-flowing water. Abundant riffle areas with gravel or cobble substrate for spawning and deeper pools with sufficient riparian cover for rearing are necessary for successful breeding. The resident life form of steelhead is called rainbow trout, and are also protected in anadromous streams.

Survey Results

Within the BSA, San Anselmo Creek is intermittent and primarily contains riffle habitat with substrate composed of gravels and cobble, as well as a concrete curtain and Denil fish ladder beneath the bridge. Banks have been stabilized with large riprap and shotcrete to prevent erosion around the foundation of the bridge and the concrete curtain underneath the bridge. During the November 17, 2014 site visit, no water was flowing and the creek was dry. During the March 15, 2016 site visit, flows spanned the entire width of the creekbed under the bridge. Channel width was approximately 50 feet beneath the bridge. Water depths overtop of the curtain were between 1 and 6 inches. A majority of the water was focused through the Denil fish ladder. Slow riffle habitat is located upstream of the bridge for approximately 150 feet. Flows below the bridge were primarily fast riffle with some pool habitat on either side of the fish ladder.

Fish passage downstream of the BSA has been improved in recent years with the retrofit of the Center Boulevard box culvert in 2012 (CEMAR 2012). According to a 2006 fish passage assessment conducted by Taylor and Associates of Corte Madera Creek and its tributaries, four partial or complete barriers remain downstream of the BSA that reduce passage. There is a partial barrier at Fairfax-Bolinas Road where a box culvert reduces passage for adult salmonids and eliminates passage for immature fish. A concrete flood channel along Corte Madera Creek near McAllister Avenue impedes fish passage at low flows due to insufficient depths. The two remaining barriers consist of sub-standard Denil fish ladders. In 2006, Ross Taylor and Associates performed a functional analysis of the ladders at Saunders Avenue and Pastori Avenue. The ladder at Saunders Avenue was classified as a total barrier, while Pastori was classified as a partial barrier. The ladder at Saunders Avenue does not meet required Denil fish ladder criteria and has a 42-foot-long concrete flume below the ladder which impedes the approach to the ladder (Taylor and Associates 2006). The ladder at Pastori was determined to have a flow capacity and ladder slope which make the ladder unusable by fish during many flow conditions (Taylor and Associates 2006). The combination of these barriers limits fish passage below the BSA. Assessments for the removal or modification of the Saunders and Pastori barriers have been completed and await funding and permitting through the group, Friends of Corte Madera Creek (FOCMCW 2017). The fish ladder in the BSA is at a large enough angle it may reduce fish passage upstream (Taylor and Associates 2006).

Despite potential barriers to fish passage below the BSA, San Anselmo Creek is still considered an anadromous stream because the barriers only prevent adult steelhead passage during portions of the year when flows are inappropriate for fish passage (Taylor and Associates 2006).

Moreover, steelhead have been observed in San Anselmo Creek above the Saunders Avenue fish ladder, which is the most difficult of the four barriers for fish to overcome (CDFW 2017d, FOCMCW 2017). Thus, steelhead are considered present within San Anselmo Creek and may be present if suitable water depths and conditions are met. San Anselmo Creek within the BSA is intermittent and has potential to contain steelhead only when water is present.

Avoidance and Minimization

Habitat in the BSA is within critical habitat for both Coho salmon and steelhead, and is within EFH for Pacific salmonids. As mentioned above, Coho salmon are considered extirpated in the watershed, but CCC steelhead are assumed present. In addition to the measures identified for the Intermittent Stream Biological Community; the following measures will be implemented to avoid and minimize potential project impacts to steelhead, critical habitat for steelhead and Coho Salmon, and EFH.

- Consultation with NMFS will be conducted to ensure proposed project design will not result in permanent adverse effects to steelhead, critical habitat, or EFH.
- Work within the channel will be conducted during the dry season (June 1 through October 31) and when no water is present in the work area to avoid the time when fish may be present. Work outside of this period will require formal consultation with NMFS.
- Concrete, dust, and other debris from concrete removal activities will be captured and removed from the work site so as not to enter the creek channel.
- The creek bed will be restored to pre-project conditions following the completion of work.
- The existing fish ladder will be left in place and avoided by Project activities. Where disturbed, the creek channel will be restored to the pre-project grade using native cobble, gravel, and soils in appropriate ratios to mimic pre-project conditions.

Project Impacts

As summarized in Table 2 above, 0.001 acre (55 square feet) of temporary impacts to critical habitat and EFH will occur from the proposed project. Critical habitat and EFH are encompassed by the Intermittent Stream habitat within the BSA. No work will occur when water is present; therefore, no fish will be present during work within the creekbed and no direct impacts to steelhead are anticipated. No permanent loss of Intermittent Stream habitat is anticipated from the proposed project.

The bridge work will replace and extend the existing northern wingwalls but will not create a barrier across the channel, decrease flows, or change substrate size. The extension of wingwalls is outside of the creekbed and restricted to developed bank habitat. Minor channelization of the stream will occur from the northwest wingwall extension; however, a detectable change in flow rate from the extension is not anticipated. The stream channel will be restored to near pre-project conditions following the completion of bridge work, recreating the gradient which currently exists. Restoration will use previously excavated cobble and gravel substrate to mimic the channel conditions prior to excavation including creek gradient. The existing fish ladder will be left in place and avoided by project activities. As such, the proposed project will not change fish passage conditions.

The proposed project will not result in any changes to existing land use; and the BSA will be restored to conditions similar to those before the project. Therefore, no indirect impacts are expected.

The proposed project will not result in loss of habitat for steelhead or a reduction or detectable change in the physical and biological properties of critical habitat or EFH. Therefore, the

proposed project **may affect, but is not likely to adversely affect** steelhead, critical habitat, and EFH.

Cumulative Impacts

No cumulative effects are anticipated from the proposed project. Downstream fish passage improvements have been recently made and the future improvements to the Saunders and Pastori Avenue crossings are planned (FOCMCW 2017). The improvement of these structures will remove and/or improve passage over the partial barriers which currently impede anadromy during certain flow conditions. The proposed project will restore the BSA to near pre-project conditions and not result in changes to fish passage within the BSA. Restoration to near pre-project conditions will ensure that no barriers are created to fish passage during proposed project activities, and any improvements to downstream fish passage will not be hindered by the proposed project.

SPECIAL-STATUS AND NON-SPECIAL-STATUS NESTING BIRDS

Five special-status species of birds including: Allen's hummingbird, purple martin, olive-sided flycatcher, oak titmouse and Nuttall's woodpecker, have potential to nest within or adjacent to the BSA. A brief discussion on these species is provided below. In addition to the special-status bird species, non-special-status birds have the potential to nest within the BSA. Most native birds in the United States, including non-status species, are protected by the Federal Migratory Bird Treaty Act of 1918 and California Fish and Game Code. Under these legislations, destroying active nests, eggs, or young is illegal.

- **Allen's hummingbird (*Selasphorus sasin*, USFWS Bird of Conservation Concern).** Allen's hummingbird, common in many portions of its range, is a summer resident along the majority of California's coast and a year-round resident in portions of coastal southern California and the Channel Islands. Breeding occurs in association with the coastal fog belt, and typical habitats used include coastal scrub, riparian, woodland and forest edges, and eucalyptus and cypress groves (Mitchell 2000). It feeds on nectar, as well as insects and spiders.

- **Purple martin (*Progne subis*, CDFW Species of Special Concern).** The purple martin is an uncommon summer resident in California, occurring in woodlands and low-elevation hardwood and coniferous forest. It usually feeds on insects captured in flight 100-200 feet above ground. The purple martin nests in cavities often located in tall, isolated trees or snags in open forest or woodland.

- **Olive-sided flycatcher (*Contopus cooperi*, CDFW Species of Special Concern, USFWS Bird of Conservation Concern).** This species if found within the coniferous forest biome, most often associated with forest openings, forest edges near natural openings (e.g. meadows, canyons, or rivers) or human-made openings (e.g., harvest units), or open to semi-open forest stands (Altman, 2000).

- **Oak titmouse (*Baeolophus inornatus*, USFWS Bird of Conservation Concern).** This relatively common species is year-round resident throughout much of California including most of the coastal slope, the Central Valley and the western Sierra Nevada foothills. Its primary habitat is woodland dominated by oaks. Local populations have adapted to woodlands of pines and/or junipers in some areas (Cicero 2000). The oak titmouse nests in tree cavities, usually natural cavities or those excavated by woodpeckers, though they may partially excavate their own (Cicero 2000). Seeds and arboreal invertebrates make up the birds' diet.

- **Nuttall's woodpecker (*Picoides nuttallii*, USFWS Bird of Conservation Concern).** Nuttall's Woodpecker, common in much of its range, is a year-round resident throughout most of California west of the Sierra Nevada. Typical habitat is oak or mixed woodland, and riparian areas (Lowther 2000). Nesting occurs in tree cavities, principally those of oaks and larger riparian trees. Nuttall's woodpecker also occurs in older residential settings and orchards where trees provide suitable foraging and nesting habitat. This species forages on a variety of arboreal invertebrates.

Survey Results

Trees and vegetation within and surrounding the BSA may provide potential nest sites or foraging habitat for Allen's hummingbird, purple martin, olive-sided flycatcher, oak titmouse, and Nuttall's woodpecker, and for non-special-status bird species.

Avoidance and Minimization

Although potential nesting habitat for nesting birds would not be lost as a result of the proposed project, construction could disturb active nests. The following measures will be implemented to avoid and minimize potential impacts to special-status and non-special-status nesting birds:

- If proposed project activities begin between February 15 and August 31, pre-construction surveys will be conducted by a qualified biologist prior to ground disturbance or vegetation removal to determine whether active nests containing eggs, chicks, or young are present in the BSA. Pre-construction surveys for active nests will be conducted no more than 14 days prior to ground disturbing or vegetation removal activities.
- If active nests containing eggs, chicks, or young are not observed during pre-construction surveys, construction can proceed.
- If active nests containing eggs, chicks, or young are observed, ground-disturbing activities will be avoided within a 25- to 100-foot exclusion zone for passerine birds and a 200- to 500-foot exclusion zone for raptors and special-status species. Exclusion size will be dependent upon species and nest location. Appropriate exclusion distances will be determined by a qualified biologist based on the species present and location of the nest relative to construction activities (e.g., the nest is sufficiently shielded from construction to avoid disturbance). Construction within this buffer will be prohibited until the qualified biologist determines that the nest is no longer active. If an active nest is found after the completion of the pre-construction surveys or after construction begins, all construction activities will stop until a qualified biologist has evaluated the nest and determined an appropriate buffer to be placed around the nest. If avoidance of a buffer zone is not feasible, CDFW and/or the USFWS will be contacted to coordinate an appropriate course of action.
- No surveys will be required if project activities begin during the non-nesting season, September 1 and February 14.

Project Impacts

The BSA contains potential nesting habitat for special-status and non-special-status nesting birds. Although this habitat would not be lost as a result of the proposed project, construction activities could result in direct impacts to active nests, and construction noise could result in indirect impacts to active nests. No trees are anticipated to be removed, and the BSA will be

restored to pre-project conditions, and as such, no permanent direct impacts to nesting birds are expected.

The proposed project will not result in any changes to existing land use and the BSA will be restored to pre-project conditions; therefore, no indirect effects are expected.

Cumulative Impacts

No future public or private activities are known to be planned or reasonably foreseen for the BSA. The proposed project does not include any additional activities beyond those discussed in this document. Therefore, cumulative effects on special-status and non-special-status nesting birds are not anticipated for the proposed project.

Chapter 5 – Conclusions and Regulatory Determinations

Federal Endangered Species Act Consultation Summary

There has been no federal Endangered Species Act Section 7 consultation to date with the USFWS and/or NMFS. The proposed project **may affect but is not likely to adversely affect** NSO, a federally threatened species. Impacts to NSO may be avoided by restricting construction activities to the non-nesting season, September 1 through January 31. However, if avoiding the nesting season is not feasible, protocol-level surveys must be conducted in the year of proposed project activities to determine nesting status. Consultation with USFWS will be required to assess impacts of the proposed project and avoidance and minimization measures used to limit effects to NSO. A Biological Assessment and a request for concurrence will be submitted to USFWS as part of the consultation process.

The proposed project **may affect but is not likely to adversely affect** CCC steelhead, a federally threatened species, and designated critical habitat for CCC steelhead and Coho salmon. The project will be scheduled when San Anselmo Creek is dry within the BSA. No work will occur when fish have potential to be present within the work area. Consultation is required from NMFS to assess impacts of the project as well as avoidance and minimization measures used to reduce impacts on steelhead and designated critical habitat for steelhead and Coho salmon. This may include a review of the project design by NMFS for fish passage consideration, and compensatory mitigation. A Biological Assessment and a request for concurrence will be submitted to NMFS as part of the consultation process.

Coho salmon are considered extirpated from San Francisco Bay (NMFS 2012, Brown and Moyle 1991); therefore, the proposed project will have no effect on Coho salmon and consultation is not required.

Essential Fish Habitat Consultation Summary

As discussed in the previous section, the proposed project may affect designated critical habitat for steelhead and Coho salmon. Coho salmon are covered by EFH in California; however, this species is extirpated from the tributaries of San Francisco Bay and are therefore not present within San Anselmo Creek. Although no species covered under EFH are anticipated to occur, the BSA still contains habitat identified as Pacific Salmon EFH. No work will occur when water is present in the work area. No loss of habitat function or value is anticipated from the proposed project. The proposed project is not anticipated to adversely affect EFH.

California Endangered Species Act Consultation Summary

California state-listed species do not have potential to occur within the BSA. Northern spotted owl is listed as threatened under the California Endangered Species Act and may occur near the BSA. The proposed project will not take NSO under the definition of CESA, and no take of any other state-listed species is anticipated to occur during the proposed project; therefore, consultation in relation to CESA is not necessary for the proposed project. However, a Consistency Determination with USFWS is recommended to be requested from CDFW.

Wetlands and Other Waters Coordination Summary

As summarized in Table 2 above, less than 0.001 acre (55 square feet, approximately 12 linear feet) of temporary impacts to potentially jurisdictional “other waters” (creek bed) are proposed. A preliminary Jurisdictional Determination will be submitted to the USACE for verification. The permits that will be required include a Streambed Alteration Agreement (CDFW), CWA 401

certification (RWQCB), and CWA 404 Nationwide Permit 3 (Maintenance) or 14 (Linear Transportation Projects) (USACE).

Invasive Species

With implementation of the avoidance and minimization efforts in Section 3, the proposed project would not result in severe infestations of invasive plant species or spread of the New Zealand mud snail.

Other

Migratory Bird Treaty Act and California Fish and Game Code. Although potential nesting habitat for nesting birds would not be lost as a result of the project, construction could result in temporary impacts if active nests are disturbed. Measures including preconstruction surveys and establishment of buffers if active nests are found will ensure that the project will not affect nesting birds.

Chapter 6 – References

Altman, B., and R. Sallabanks. 2000. Olive-sided Flycatcher (*Contopus cooperi*). In The Birds of North America, No. 502 (A. Poole and F. Gill, eds.). The Birds of North America, Inc., Philadelphia, PA.

Baldwin, B.G., D.H. Goldman, D.J Keil, R. Patterson, T.J. Rosatti, and D.H. Wilken (eds.). 2012. The Jepson Manual: Vascular Plants of California, second edition. University of California Press, Berkeley, CA.

Brown, L. R., and P. B. Moyle. 1991. Status of Coho Salmon in California. Report to National Marine Fisheries. UC Davis, Department of Wildlife and Fisheries Biology: 131 p.

CDFG. 1994. A Field Guide to Lake and Streambed Alteration Agreements, Sections 1600-1607, California Fish and Game Code. Environmental Services Division, Sacramento, CA.

CDFG. 2009. List of California Vegetation Alliances. Biogeographic Data Branch. Vegetation Classification and Mapping Program, Sacramento, CA.

CDFG. 2003. List of California Terrestrial Natural Communities Recognized by the California Natural Diversity Database Wildlife and Habitat Data Analysis Branch. Vegetation Classification and Mapping Program, Sacramento, CA.

CDFW. 2017a. California Natural Diversity Database (CNDDB). Wildlife and Habitat Data Analysis Branch, Sacramento, CA.

CDFW 2017b. Spotted Owl Database, Wildlife and Habitat Data Analysis Branch. Sacramento. Accessed: March.

CDFW 2017c. California Wildlife Habitat Relationships System online database. Online at: http://www.dfg.ca.gov/biogeodata/cwhr/; accessed March.

CDFW 2016d. California Passage Assessment Database. Online at: https://nrm.dfg.ca.gov/PAD/; accessed March 2016.

California Invasive Plant Council (Cal-IPC). 2017. California Invasive Plant Inventory Database. California Invasive Plant Council, Berkeley, CA. Online at: http://www.cal-ipc.org/ip/inventory/index.php; most recently accessed: April 2017.

California Invasive Species Council. 2016. http://www.iscc.ca.gov/ most recently accessed: December 2016.

California Native Plant Society (CNPS). 2017. Inventory of Rare and Endangered Plants of California. CNPS, Sacramento, California. Online at: http://www.rareplants.cnps.org; most recently accessed: April.

Center for Ecosystem Management and Restoration (CEMAR). 2012. Estuary Improvement Program. San Anselmo Creek, Center Boulevard Fish Passage Design.

Chow, N. 2001. Distribution and Habitat Associations of Northern Spotted Owls in Marin County, California. M.S. Thesis, Humboldt State University.

Cicero, C. 2000. Oak Titmouse (*Baeolophus inornatus*), The Birds of North America Online (A. Poole, Ed.). Ithaca: Cornell Lab of Ornithology; Retrieved from the Birds of North America Online: http://bna.birds.cornell.edu/bna/species/485a

eBird. 2017. Audubon and Cornell Lab of Ornithology. Online at: http://ebird.org/ebird/map; accessed January.

Environmental Laboratory. 1987. Corps of Engineers Wetlands Delineation Manual. Department of the Army, Waterways Experiment Station, Vicksburg, Mississippi 39180-0631.

Federal Register. November 13, 1986. Department of Defense, Corps of Engineers, Department of the Army, 33 CFR Parts 320 through 330, Regulatory Programs of the Corps of Engineers; Final Rule. Vol. 51, No. 219; page 41217.

Friends of Corte Madera Creek Watershed (FOCMCW). Fish Habitat Restoration Projects. http://www.friendsofcortemaderacreek.org; accessed April.

Google Earth. 2017. Aerial Imagery 1993-2016. Accessed March.

Gutiérrez, R. J., A. B. Franklin and W. S. Lahaye. 1995. Spotted Owl (*Strix occidentalis*), The Birds of North America Online (A. Poole, Ed.). Ithaca: Cornell Lab of Ornithology; Retrieved from the Birds of North America Online: http://bna.birds.cornell.edu/bna/species/179

Jennings, M.R. 2004. An Annotated Check List of Amphibians and Reptile Species of California and Adjacent Waters, third revised edition. California Department of Fish and Game, Sacramento, CA.

Leidy, R.A, G.S. Becker, and B.N. Harvey. 2005. Historical distribution and current status of steelhead/rainbow trout (*Oncorhynchus mykiss*) in streams of the San Francisco Bay Estuary, California. Center for Ecosystem Management and Restoration, Oakland, CA.

Lowther, Peter E. 2000. Nuttall's Woodpecker (*Picoides nuttallii*), The Birds of North America Online (A. Poole, Ed.). Ithaca: Cornell Lab of Ornithology; Retrieved from the Birds of North America Online:http://bna.birds.cornell.edu/bna/species/555

McShane, C., T. Hamer, H. Carter, G. Swartzman, V. Friesen, D. Ainley, R. Tressler, K. Nelson, A. Burger, L. Spear, T. Mohagen, R. Martin, L. Henkel, K. Prindle, C. Strong, and J. Keany. 2004. Evaluation report for the 5-year status review of the marbled murrelet in Washington, Oregon, and California. Unpublished report. EDAW, Inc. Seattle, Washington. Prepared for the U.S. Fish and Wildlife Service, Region 1. Portland, Oregon.

Mitchell, D.E. 2000. Allen's Hummingbird (*Selasphorus sasin*), The Birds of North America Online (A Poole, Ed.). Ithaca: Cornell Lab of Ornithology; Retrieved from the Birds of North America Online:http://bna.birds.cornell.edu/bna/species/501.

Moyle, P.B. 2002. Inland Fishes of California Revised and Expanded. University of California Press, Berkeley.

National Marine Fisheries Service. (NMFS). 2012. Final Recovery Plan for Central California Coast Coho Salmon Evolutionarily Significant Unit. National Marine Fisheries Service, Southwest Region, Santa Rosa, California.

National Marine Fisheries Service (NMFS). 2016. Intersection of USGS Topographic Quadrangles with NOAA Fisheries ESA Listed Species, Critical Habitat, Essential Fish Habitat, and MMPA Species Data. California Species List, West Coast Region. Online: http://www.westcoast.fisheries.noaa.gov/maps_data/california_species_list_tools.html; accessed April 2017.

Ross Taylor and Associates. 2006. Catalog of Stream Crossings with Culverts, and other Manmade Impediments to Fish Passage Located on Anadromous Stream Reaches Within San Anselmo Creek, Corte Madera Creek Watershed Marin County California. Prepared for Friends of Corte Madera Creek Watershed.

Sawyer, J., T. Keeler-Wolf and J. Evens. 2009. A Manual of California Vegetation, Second Edition. California Native Plant Society, Berkeley, CA.

Shuford, W. D. 1993. The Marin County Breeding Bird Atlas: A Distributional and Natural History of Coastal California Birds. California Avifauna Series 1. Bushtit Books, Bolinas, CA.

Shuford, W.D., and T. Gardali (eds). 2008. California Bird Species of Special Concern: A ranked assessment of species, subspecies, and distinct populations of birds of immediate conservation concern in California. Studies of Western Birds 1. Western Field Ornithologists, Camarillo, California, and CDFG, Sacramento.

Stebbins, R.C. 2003. A Field Guide to Western Reptiles and Amphibians, third edition. The Peterson Field Guide Series, Houghton Mifflin Company, NY.

Thomson, R.C., A.N. Wright, and H.B. Shaffer. 2016. California Amphibian and Reptile Species of Special Concern. Co-published by the California Department of Fish and Wildlife and University of California Press. Oakland, California.

U.S. Army Corps of Engineers (USACE). 2008. Regional Supplement to the Corps of Engineers Wetland Delineation Manual: Arid West Region (Version 2.0).

U.S. Army Corps of Engineers. 2005. Regulatory Guidance Letter No. 05-05. Ordinary High Water Mark Identification.

U.S. Department of Agriculture (USDA), Natural Resources Conservation Service (NRCS). 2017. Soil Web Online Soil Mapper. http://websoilsurvey.nrcs.usda.gov/app/WebSoilSurvey.aspx; most recently accessed April.

U.S. Fish and Wildlife Service (USFWS). 2006. Transmittal of Guidance: Estimating the Auditory and Visual Disturbance to Northern Spotted Owls and Marbled Murrelets in Northwestern California. U.S. Fish and Wildlife Service, Arcata, California. July. 12 pp.

U.S. Fish and Wildlife Service (USFWS). 2008. Final Recovery Plan for the Northern Spotted Owl, Strix occidentalis caurina. U.S. Fish and Wildlife Service, Portland, Oregon. xii + 142 pp.

U.S. Fish and Wildlife Service (USFWS). 2009. Marbled Murrelet (*Brachyramphus marmoratus*) 5-Year Review. Washington Fish and Wildlife Office, Lacey, WA. June 12.

U.S. Fish and Wildlife Service (USFWS). 2012. Protocol for surveying proposed management activities that may impact northern spotted owl. Revised. Available: http://www.fws.gov/yreka/ES/2012RevisedNSOprotocol-2-15-12.pdf

U.S. Fish and Wildlife Service (USFWS). 2017. Official Species List for the Canyon Road Bridge Preventative Maintenance Project. Consultation Code: 08ESMF00-2016-SLI-1016. May 9.

USFWS. 2016. National Wetlands Inventory website. U.S. Department of the Interior, USFWS, Washington, D.C. http://www.fws.gov/wetlands/Wetlands-Mapper; most recently accessed April 2016.

U.S. Geological Survey (USGS). 2015. Bolinas, Novato, Petaluma Point, Point Bonita, San Francisco North, San Geronimo, San Rafael, San Quentin U.S. Geological Service 7.5' Quadrangles. 7.5 minute topographic maps.

University of California at Davis. 2016. Center for Watershed Sciences. Pisces: California Fish Data and Management Software. Available online at: http://pisces.ucdavis.edu/
Most recently accessed: March.

Western Bat Working Group (WBWG). 2017. Western bat species accounts. Available: http://wbwg.org/western-bat-species/. Accessed March.

Zeiner, D.C., W.F. Laudenslayer, Jr., K.E. Mayer, and M. White. 1990. California's Wildlife, Volume I-III: Amphibians and Reptiles, Birds, Mammals. California Statewide Wildlife Habitat Relationships System, California Department of Fish and Game, Sacramento, CA.

This page intentionally left blank

Appendix A – Plant and Wildlife Species Observed during the Site Visits

This page intentionally left blank

Appendix A1. Plant Species Observed During the Fairfax BPMP Bridges Site Visits (Bridges 27C0146, 27C0143, and 27C0141) on November 17, 2014, January 16 and March 16, 2015, April 12, 2016and June 23, 2016

Family	*Scientific Name*	Common Name
Other		
Hornwort (Anthocerotaceae)	*Anthceros* sp.	-
lichen	*Ramalina menziesii*	lace lichen
liverwort (Lunulariaceae)	*Lunularia* sp.	-
liverwort (Aytoniaceae)	*Reboulia* sp. (cf)	-
moss	*Alsia californica*	-
moss	*Brachythecium albicans*	-
moss	*Ceratodon purpureus*	-
moss	*Claopodium whippleanum*	-
moss	*Dendroalsia abietina*	-
moss	*Epipterygium tozeri*	-
moss	*Fissidens crispus*	-
moss	*Pohlia* sp.	-
moss	*Syntrichia princeps*	prince of mosses
moss	*Tortula muralis*	
Cupressaceae	*Sequoia sempervirens*	redwood
Dryopteridaceae	*Polystichum munitum*	western swordfern
Equisetaceae	*Equisetum arvense*	common horsetail
Polypodiaceae	*Polypodium californicum*	California polypody
Pteridaceae	*Adiantum jordanii*	California maidenhair fern
-	-	various landscape plantings
Eudicots		
Acanthaceae	Acanthus mollis	bear's breeches
Anacardiaceae	*Toxicodendron diversilobum*	poison oak
Apiaceae	*Foeniculum vulgare*	fennel
Apiaceae	*Sanicula crassicaulis*	sanicula
Apiaceae	*Scandix pectin-veneris*	Venus' needle
Apiaceae	*Torilis arvensis* ssp. *purpurea*	hedge parsley
Apocynaceae	*Vinca major*	big leaf periwinkle
Araliaceae	*Hedera helix*	English ivy
Asteraceae	*Adenocaulon bicolor*	trail marker
Asteraceae	*Carduus pycnocephalus*	Italian thistle
Asteraceae	*Taraxacum officinale*	common dandelion
Betulaceae	*Alnus rhombifolia*	white alder

Family	*Scientific Name*	Common Name
Boraginaceae	*Myosotis latifolia*	broadleaf forget me not
Brassicaceae	*Lunaria annua*	lunaria
Caprifoliaceae	*Lonicera japonica*	Japanese honeysuckle
Caprifoliaceae	*Symphoricarpos albus* var. *laevigatus*	snowberry
Caryophyllaceae	*Stellaria media*	common chickweed
Chenopodiaceae	*Chenopodium album*	lambs quarters
Cucurbitaceae	*Marah fabacea*	California man-root
Euphorbiaceae	*Euphorbia peplus*	petty spurge
Fabaceae	*Acacia melanoxylon*	blackwood acacia
Fabaceae	*Genista monspessulana*	French broom
Fabaceae	*Medicago polymorpha*	bur clover
Fabaceae	*Trifolium dubium*	little hop clover
Fabaceae	*Vicia sativa* ssp. *nigra*	narrow leaved vetch
Fagaceae	*Quercus agrifolia var. agrifolia*	coast live oak
Fagaceae	*Quercus kelloggii*	black oak
Geraniaceae	*Erodium botrys*	storks bill
Geraniaceae	*Erodium cicutarium*	storks bill
Geraniaceae	*Erodium (moschatum?)*	California filigree
Geraniaceae	*Geranium dissectum*	cut leaf geranium
Geraniaceae	*Geranium molle*	woodland geranium
Hypericacaeae	*Hypericum anagalloides*	Tinkers penny
Juglandaceae	*Juglans cinerea*	butternut
Lamiaceae	*Mentha pulegium*	penny royal
Lamiaceae	*Mentha spicata*	spearmint
Lamiaceae	*Stachys rigida* var. *querectorum*	hedge-nettle
Lauraceae	*Umbellularia californica*	California bay
Montiaceae	*Claytonia perfoliata*	miners lettuce
Moraceae	*Ficus carica*	edible fig
Myrsinaceae	*Lysimachia arvensis*	scarlet pimpernel
Oleaceae	*Ligustrum japonicum*	privet
Oxalidaceae	*Oxalis incarnata*	crimson wood sorrel
Oxalidaceae	*Oxalis pes-carpe*	Bermuda buttercup
Papaveraceae	*Fumaria capreolata*	white ramping fumitory
Plantaginaceae	*Plantago lanceolata*	English plantain
Platanaceae	*Platanus racemosa* *(P. x hispanica?)*	sycamore
Polygonaceae	*Rumex acetosella*	sheep sorrel
Polygonaceae	*Rumex conglomeratus*	dock

Family	*Scientific Name*	Common Name
Polygonaceae	*Rumex (obtusifolius*?)	bitterdock
Ranunculaceae	*Clematis ligusticifolia*	western virgins bower
Rosaceae	*Amelanchier utahensi*s	service berry
Rosaceae	*Cotoneaster pannosus*	silverleaf cotoneaster
Rosaceae	*Prunus* sp.	prunus
Rosaceae	*Pyracantha angustifolia*	firethorn
Rosaceae	*Rosa* sp.	rose (landscape plant)
Rosaceae	*Rubus armeniacus*	Himalayan blackberry
Rosaceae	*Rubus ursinus*	California blackberry
Ruscaceae	*Maianthemum (racemosum?)*	False Solomon's seal
Rubiaceae	*Galium aparine*	goosegrass
Sapindaceae	*Acer macrophyllum*	big leaf maple
Sapindaceae	*Acer negundo*	boxelder
Sapindaceae	*Aesculus californica*	buckeye
Urticaceae	*Urtica dioica*	stinging nettle
Monocots		
Alliaceae	*Allium triquetrum*	Three-cornered leek
Amaryllidaceae	*Galanthus* sp.	snowdrop (landscape plant)
Araceae	*Zantedeschia aethiopica*	calla-lily
Cyperaceae	*Carex* sp.	sedge
Cyperaceae	*Cyperus eragrostis*	tall flat nut-sedge
Iridaceae	*Chasmanthe aethiopica*	coral lily (landscape plant)
Iridaceae	*Freesia* sp. (landscape planting)	freesia
Juncaceae	*Juncus articus* var. *balticus*	Baltic rush
Juncaceae	*Juncus patens*	rush
Juncaceae	*Juncus* sp.	rush
Poaceae	*Agrostis* sp.	bent grass
Poaceae	*Avena barbata*	slender wild oat
Poaceae	*Avena fatua*	wild oat
Poaceae	*Bromus diandrus*	ripgut brome
Poaceae	*Bromus* sp.	brome
Poaceae	*Cortaderia jubata*	pampus grass
Poaceae	*Cynosurus echinatus*	hedgehog dogtail
Poaceae	*Ehrharta erecta*	panic veldtgrass
Poaceae	*Festuca myuros*	rattail grass
Poaceae	*Festuca perennis*	perennial ryegrass
Poaceae	*Hordeum murinum* sp. *murinum*	wall barley
Poaceae	*Poa annua*	annual bluegrass

Appendix A2. Wildlife Species Observed During the Fairfax BPMP Bridges Site Visits (Bridges 27C0146, 27C0143, and 27C0141) on November 17, 2014 and March 15, 2016 Site Visits.

Scientific Name	Common Name
Mammals	
Felis catus	feral cat
Sciurus griseus	western gray squirrel
Sciurus niger	fox squirrel
Odocoileus hemionus columbianus	black-tailed deer
Birds	
Aphelocoma californica	California scrub-jay
Baeolophus inornatus	oak titmouse
Cathartes aura	turkey vulture
Corvus brachyrhynchos	American crow
Euphagus cyanocephalus	Brewer's blackbird
Haemorhous mexicanus	house finch
Melanerpes formicivorus	acorn woodpecker
Picoides nuttallii	Nuttall's woodpecker
Poecile rufescens	chestnut backed chickadee
Corvus corax	common raven
Cyanocitta stelleri	Steller's jay
Spinus psaltria	lesser goldfinch
Zenaida macroura	mourning dove
Zonotrichia leucophrys	white-crowned sparrow
Fish	
Gasterosteus aculeatus	*threespine stickleback*
Cottus asper	*prickly sculpin*
Invertebrates	
Potamopyrgus antipodarum	*New Zealand mud snail*
Pieris rapae	*cabbage white*

Appendix B - USFWS Species List

This page intentionally left blank

United States Department of the Interior

FISH AND WILDLIFE SERVICE
Sacramento Fish And Wildlife Office
Federal Building
2800 Cottage Way, Room W-2605
Sacramento, CA 95825-1846
Phone: (916) 414-6600 Fax: (916) 414-6713

In Reply Refer To: May 09, 2017
Consultation Code: 08ESMF00-2016-SLI-1016
Event Code: 08ESMF00-2017-E-05168
Project Name: Canyon Road Bridge Preventative Maintenance Project

Subject: Updated list of threatened and endangered species that may occur in your proposed project location, and/or may be affected by your proposed project

To Whom It May Concern:

The enclosed species list identifies threatened, endangered, proposed and candidate species, as well as proposed and final designated critical habitat, under the jurisdiction of the U.S. Fish and Wildlife Service (Service) that may occur within the boundary of your proposed project and/or may be affected by your proposed project. The species list fulfills the requirements of the Service under section 7(c) of the Endangered Species Act (Act) of 1973, as amended (16 U.S.C. 1531 et seq.).

Please follow the link below to see if your proposed project has the potential to affect other species or their habitats under the jurisdiction of the National Marine Fisheries Service:

http://www.nwr.noaa.gov/protected_species/species_list/species_lists.html

New information based on updated surveys, changes in the abundance and distribution of species, changed habitat conditions, or other factors could change this list. Please feel free to contact us if you need more current information or assistance regarding the potential impacts to federally proposed, listed, and candidate species and federally designated and proposed critical habitat. Please note that under 50 CFR 402.12(e) of the regulations implementing section 7 of the Act, the accuracy of this species list should be verified after 90 days. This verification can be completed formally or informally as desired. The Service recommends that verification be completed by visiting the ECOS-IPaC website at regular intervals during project planning and implementation for updates to species lists and information. An updated list may be requested through the ECOS-IPaC system by completing the same process used to receive the enclosed list.

The purpose of the Act is to provide a means whereby threatened and endangered species and the ecosystems upon which they depend may be conserved. Under sections 7(a)(1) and 7(a)(2) of the Act and its implementing regulations (50 CFR 402 et seq.), Federal agencies are required to

utilize their authorities to carry out programs for the conservation of threatened and endangered species and to determine whether projects may affect threatened and endangered species and/or designated critical habitat.

A Biological Assessment is required for construction projects (or other undertakings having similar physical impacts) that are major Federal actions significantly affecting the quality of the human environment as defined in the National Environmental Policy Act (42 U.S.C. 4332(2)(c)). For projects other than major construction activities, the Service suggests that a biological evaluation similar to a Biological Assessment be prepared to determine whether the project may affect listed or proposed species and/or designated or proposed critical habitat. Recommended contents of a Biological Assessment are described at 50 CFR 402.12.

If a Federal agency determines, based on the Biological Assessment or biological evaluation, that listed species and/or designated critical habitat may be affected by the proposed project, the agency is required to consult with the Service pursuant to 50 CFR 402. In addition, the Service recommends that candidate species, proposed species and proposed critical habitat be addressed within the consultation. More information on the regulations and procedures for section 7 consultation, including the role of permit or license applicants, can be found in the "Endangered Species Consultation Handbook" at:

http://www.fws.gov/endangered/esa-library/pdf/TOC-GLOS.PDF

Please be aware that bald and golden eagles are protected under the Bald and Golden Eagle Protection Act (16 U.S.C. 668 et seq.), and projects affecting these species may require development of an eagle conservation plan (http://www.fws.gov/windenergy/eagle_guidance.html). Additionally, wind energy projects should follow the wind energy guidelines (http://www.fws.gov/windenergy/) for minimizing impacts to migratory birds and bats.

Guidance for minimizing impacts to migratory birds for projects including communications towers (e.g., cellular, digital television, radio, and emergency broadcast) can be found at: http://www.fws.gov/migratorybirds/CurrentBirdIssues/Hazards/towers/towers.htm; http://www.towerkill.com; and http://www.fws.gov/migratorybirds/CurrentBirdIssues/Hazards/towers/comtow.html.

We appreciate your concern for threatened and endangered species. The Service encourages Federal agencies to include conservation of threatened and endangered species into their project planning to further the purposes of the Act. Please include the Consultation Tracking Number in the header of this letter with any request for consultation or correspondence about your project that you submit to our office.

Attachment(s):

- Official Species List

Official Species List

This list is provided pursuant to Section 7 of the Endangered Species Act, and fulfills the requirement for Federal agencies to "request of the Secretary of the Interior information whether any species which is listed or proposed to be listed may be present in the area of a proposed action".

This species list is provided by:

Sacramento Fish And Wildlife Office
Federal Building
2800 Cottage Way, Room W-2605
Sacramento, CA 95825-1846
(916) 414-6600

Project Summary

Consultation Code: 08ESMF00-2016-SLI-1016

Event Code: 08ESMF00-2017-E-05168

Project Name: Canyon Road Bridge Preventative Maintenance Project

Project Type: BRIDGE CONSTRUCTION / MAINTENANCE

Project Description: Canyon Road Bridge (Br. No. 27C-0146) is a single-span precast voided slab concrete superstructure constructed in 1996 on two abutments remaining from a previous bridge at this location over San Anselmo Creek, Town of Fairfax, California. This bridge is in a strictly residential area leading to Cascade Drive, a major thoroughfare. The structure is approximately 30 feet long and a little over 15 feet wide. It supports a single lane of traffic and railings nearly 15 feet above the creek bed and has no sidewalks on it. There is a concrete fish ladder that begins just upstream of the bridge and ends just downstream of it. Repairs to Canyon Road Bridge will include replacement of the existing northwest wingwall, repair of the northeast wingwall, repair structural damage to the north abutment, and sealing cracks on the bridge deck. San Anselmo Creek in this region is intermittent.
The work will be at both the deck and below deck levels and is expected to take as many as fifteen working days from start to finish, and will be completed during one dry season when the work area is dry (April 15 - October 15).

Project Location:

Approximate location of the project can be viewed in Google Maps:
https://www.google.com/maps/place/37.97511969176422N122.60638848711471W

Counties: Marin, CA

Endangered Species Act Species

There is a total of 18 threatened, endangered, or candidate species on your species list. Species on this list should be considered in an effects analysis for your project and could include species that exist in another geographic area. For example, certain fish may appear on the species list because a project could affect downstream species. See the "Critical habitats" section below for those critical habitats that lie wholly or partially within your project area. Please contact the designated FWS office if you have questions.

Mammals

NAME	STATUS
Salt Marsh Harvest Mouse *(Reithrodontomys raviventris)* No critical habitat has been designated for this species. Species profile: https://ecos.fws.gov/ecp/species/613	Endangered

Birds

NAME	STATUS
California Clapper Rail *(Rallus longirostris obsoletus)* No critical habitat has been designated for this species. Species profile: https://ecos.fws.gov/ecp/species/4240	Endangered
California Least Tern *(Sterna antillarum browni)* No critical habitat has been designated for this species. Species profile: https://ecos.fws.gov/ecp/species/8104	Endangered
Marbled Murrelet *(Brachyramphus marmoratus)* Population: U.S.A. (CA, OR, WA) There is a **final** critical habitat designated for this species. Your location is outside the designated critical habitat. Species profile: https://ecos.fws.gov/ecp/species/4467	Threatened
Northern Spotted Owl *(Strix occidentalis caurina)* There is a **final** critical habitat designated for this species. Your location is outside the designated critical habitat. Species profile: https://ecos.fws.gov/ecp/species/1123	Threatened
Short-tailed Albatross *(Phoebastria (=Diomedea) albatrus)* No critical habitat has been designated for this species. Species profile: https://ecos.fws.gov/ecp/species/433	Endangered
Western Snowy Plover *(Charadrius alexandrinus nivosus)* Population: Pacific Coast population DPS-U.S.A. (CA, OR, WA), Mexico (within 50 miles of Pacific coast) There is a **final** critical habitat designated for this species. Your location is outside the designated critical habitat. Species profile: https://ecos.fws.gov/ecp/species/8035	Threatened

Amphibians

NAME	STATUS
California Red-legged Frog *(Rana draytonii)* There is a **final** critical habitat designated for this species. Your location is outside the designated critical habitat. Species profile: https://ecos.fws.gov/ecp/species/2891	Threatened

Fishes

NAME	STATUS
Delta Smelt *(Hypomesus transpacificus)* There is a **final** critical habitat designated for this species. Your location is outside the designated critical habitat. Species profile: https://ecos.fws.gov/ecp/species/321	Threatened
Steelhead *(Oncorhynchus (=Salmo) mykiss)* Population: Northern California DPS There is a **final** critical habitat designated for this species. Your location is outside the designated critical habitat. Species profile: https://ecos.fws.gov/ecp/species/1007	Threatened
Tidewater Goby *(Eucyclogobius newberryi)* There is a **final** critical habitat designated for this species. Your location is outside the designated critical habitat. Species profile: https://ecos.fws.gov/ecp/species/57	Endangered

Insects

NAME	STATUS
Mission Blue Butterfly *(Icaricia icarioides missionensis)* No critical habitat has been designated for this species. Species profile: https://ecos.fws.gov/ecp/species/6928	Endangered
Myrtle's Silverspot Butterfly *(Speyeria zerene myrtleae)* No critical habitat has been designated for this species. Species profile: https://ecos.fws.gov/ecp/species/6929	Endangered
San Bruno Elfin Butterfly *(Callophrys mossii bayensis)* No critical habitat has been designated for this species. Species profile: https://ecos.fws.gov/ecp/species/3394	Endangered

Flowering Plants

NAME	STATUS
Marin Dwarf-flax *(Hesperolinon congestum)* No critical habitat has been designated for this species. Species profile: https://ecos.fws.gov/ecp/species/5363	Threatened
Santa Cruz Tarplant *(Holocarpha macradenia)* There is a **final** critical habitat designated for this species. Your location is outside the designated critical habitat. Species profile: https://ecos.fws.gov/ecp/species/6832	Threatened
Showy Indian Clover *(Trifolium amoenum)* No critical habitat has been designated for this species. Species profile: https://ecos.fws.gov/ecp/species/6459	Endangered
White-rayed Pentachaeta *(Pentachaeta bellidiflora)* No critical habitat has been designated for this species. Species profile: https://ecos.fws.gov/ecp/species/7782	Endangered

Critical habitats

There are no critical habitats within your project area.

Appendix C – Preparers Qualifications

This page intentionally left blank

Kelly Biological Consulting
5San Anselmo, CA 94960
(415) 482-9703

P.O. Box 1625
Truckee, CA 96160
(530) 582-9713

CAPABILITIES

Kelly Biological Consulting is a WBE certified, small business experienced in conducting wetland delineations and special status plant surveys, creating vegetation maps, preparing permits, mitigation plans, and the vegetation sections of CEQA and NEPA environmental documents. The firm's primary goals are responding to client needs and providing top quality work using the knowledge that comes from years of experience. Kelly Biological Consulting subcontracts wildlife and fisheries biologists to offer a full range of biological services.

PRINCIPAL

Micki Kelly, Principal, Plant Ecologist
Professional Wetland Scientist (Certification #001007)

- Experienced in conducting plant surveys and wetland delineations in a wide variety of habitats.
- Managed the wetland permitting tasks for construction of a gas transmission line that crossed over 200 wetlands and "other waters" in California, Oregon, and Nevada. Negotiated with 3 U.S. Army Corps of Engineers Districts, 5 Regional Water Quality Control Boards, and other agencies pursuant to the Clean Water Act Sections 401, 402, and 404, and the Porter Cologne Act.
- Taught plant identification and ecology for the U.S. Army Corps of Engineers wetland delineation 40-hour training program. Also taught a class in Sierra Nevada flora and special status plants.
- Designed and implemented a monitoring plan that provided accurate comprehensive data while controlling costs for the 230-mile Tuscarora Gas Transmission Line and the 164-mile Alturas Intertie Project.
- Developed and implemented two large-scale off-site wetland mitigation areas.
- Received written commendation from the U.S. Army Corps of Engineers and California Department of Fish and Wildlife on a wetland permit and mitigation plan for a project in the Sierra foothills involving a Section 7 consultation.

Ms. Kelly has 25 years of relevant experience, successfully managing multi-faceted projects with wetland and endangered species issues, supervising staff and subcontractors. She completes projects on time and within budget. She studied plant ecology, taxonomy, and statistics at the University of Michigan, San Francisco State University, and the University of California, Berkeley. She has taught plant identification and ecology for the U.S. Army Corps of Engineers wetland delineation 40-hour training program. Prior to establishing Kelly Biological Consulting in 1994, she worked as a plant ecologist for WRA, CH2MHill, and Harding Lawson Associates.

Ms. Kelly has conducted sensitive plant species surveys and written impact and mitigation texts for California Environmental Quality Act (CEQA) and National Environmental Policy Act (NEPA) documents and as well as baseline information on restoration sites. She is experienced in designing sensitive plant surveys in accordance with the current California Native Plant Society and the California Department of Fish and Wildlife guidelines. She has conducted vegetation studies in habitats ranging from coastal salt marsh to foothill riparian and montane meadows in California and Nevada. She has extensive experience in designing suitable search patterns based on the desired level of intensity. Ms. Kelly has prepared biological assessments and developed special status plant mitigation and monitoring plans requiring substantial understanding of plant ecology.

Ms. Kelly has performed wetland assessments and delineations on numerous projects including complex filled and excavated problem wetlands, montane areas, farmed wetlands, two diked historic salt marshes that were over 1,000 acres, numerous small emergent wetlands, several 2,000+ acre sites in the Sierra Nevada, alkali playas, foothill riparian zones, and coastal salt marsh restoration sites. Ms. Kelly has expertise in Army Corps of Engineers approved sampling techniques and the data analysis that is used in performing routine and comprehensive delineation. She has developed and implemented wetland monitoring plans using the techniques currently known to be the most successful in wetland mitigation design and construction.

Ms. Kelly has extensive experience in the legal aspects of sensitive species and wetland protection. She has authored Army Corps of Engineers Permits involving Section 7 consultations, one of which received written commendation from the Army Corps of Engineers and Department of Fish and Game.

EDUCATION

BS Botany, University of Michigan
Graduate studies, University of California Berkeley and San Francisco State University

PROFESSIONAL SOCIETIES

Society of Wetland Scientists, Certified Professional Wetland Scientist
California Native Plant Society, Past Marin Chapter Board Member (8 years)
Society for Ecological Restoration
California Botanical Society
California Native Grass Association
California Invasive Plant Council (Cal-IPC)

REPRESENTATIVE PROJECTS

Project: **Central Marin Police Station, Larkspur, CA**
Client: **Central Marin Police Authority**

The Twin Cites Police Authority was planning to rebuild their police station when concerns about the existing storm drain outfalls and bank stability arose. Initial building construction was pending. Therefore, the first challenge was obtaining the federal and state permits quickly, even though sensitive brackish marsh habitat was adjacent to the site. Kelly Biological Consulting was able to conduct the wetland delineation and special status species surveys, and expedite the permits within the project deadlines. The second challenge was the site constraints (physical and biological). The site is on the outside bank of a ninety-degree bend in the creek, at the junction of freshwater and tidal flows. It is subject to large hydraulic forces in the winter and high salinity in the summer. In conjunction with the project geotechnical firm and the engineers, Ms. Kelly developed a restoration

design that successfully addressed the difficult site conditions. Ms. Kelly is currently conducting the wetland monitoring.

Project: Doherty Drive, Larkspur, CA
Client: Larkspur Department of Public Works (partially funded by Caltrans)

The Larkspur Department of Public Works rebuilt Doherty Drive and replaced storm drain outfall structures to address flood control and other road problems. In addition, they incorporated an NTTP bike path. One of the challenges of the project was dealing with construction within brackish marsh habitat where special status species are known to occur, while working within a tight schedule. Kelly Biological Consulting conducted a wetland delineation and botanical studies. The firm prepared the permit applications, and negotiated with the regulatory agencies with the goal of constructing the outfalls in a timely, cost effective manner. Construction was completed with positive reviews from the agencies.

Project: Alexander Avenue Bridge Retrofit/Rehabilitation, Larkspur, CA
Client: Larkspur Department of Public Works (partially funded by Caltrans)

The Larkspur Department of Public Works retrofitted and rehabilitated the Alexander Ave. Bridge. Kelly Biological Consulting provided pre-construction monitoring which was conducted by WRA as a subcontractor. Ms Kelly also negotiated with California Department of Fish and Wildlife regarding tree removal and planted acorns as mitigation for tree removal.

Project: Doherty Drive Bridge Replacement, Larkspur, CA
Client: Larkspur Department of Public Works (partially funded by Caltrans)

The Larkspur Department of Public Works replaced Doherty Drive Bridge. The project required construction within brackish marsh habitat and a creek where special status species are known to occur. Kelly Biological Consulting provided construction monitoring with WRA as a subcontractor. Due to schedule issues, the project required working within protected species work windows. Ms Kelly negotiated with the regulatory agencies with the goal of completing construction to avoid the additional impacts to the community that would have occurred had construction been halted until the following season.

Project: Highway Interchange, San Benito, CA
Client: Subcontractor to WRA

A proposed project required the evaluation of potential interchange alternatives. The site was near the Pajaro River. Kelly Biological Consulting conducted the special status plant surveys and contributed to preparation of the NES.

Project: Caltrans Marin Narrows Road Widening, Marin County, CA
Client: Subcontractor to WRA

Kelly Biological Consulting conducted a wetland delineation for the proposed Highway 101 widening in Marin as a subcontractor to WRA and CH2MHill. Work included field analysis, report and map preparation, and supervising WRA and CH2MHill staff. The most challenging element of the work was addressing SWANCC and Rapanos issues along a highway that had highly altered hydrology.

Project: U.S. Army Corps of Engineers Wetland Training Class, CA
Client: San Francisco State University

Ms. Kelly has taught the plant ecology portion of a wetland delineation class. The students learned the basic elements of plant identification, methods for determining wetland status, dominant species, and the wetland-upland boundary.

Information on additional projects available on request.

DANIEL CHASE, MS

Associate
Fisheries Biologist

chase@wra-ca.com
o: 415.524.7252
c: 707.363.5045

Years of Experience: 10

Education

MS, Physiology and Behavioral Biology, San Francisco State University, 2014

BS, Conservation and Resource Studies, University of California, Berkeley, 2005

Professional Affiliations/ Certifications

USFWS Recovery Permit for Tidewater Goby (TE-237061)

CDFG Scientific Collectors Permit (#8472)

Transportation Worker Identification Credential (TWIC)

American Association for the Advancement of Science

Specialized Training

40-Hour HAZWOPER Training

Fish Passage Design & Engineering Workshop, CDFG, NOAA Fisheries

Backpack Electrofishing: Principles and Practices

Freshwater Fish Identification – Biology, Ecology & Morphology

During his time with WRA, Dan has managed and worked on a diversity of fisheries and wildlife related projects including permitting, endangered species consultation, protocol level surveys, habitat evaluation and assessments, rescue and relocation, and monitoring. He has extensive experience with fisheries related issues throughout California, and currently holds a Recovery Permit from the U.S. Fish and Wildlife Service (USFWS) for tidewater goby. His technical expertise includes fisheries ecology, fish passage evaluation, geomorphic surveying, special status species surveys, habitat assessments, and eelgrass surveys. Dan's environmental work experience prior to starting with WRA includes fisheries and wildlife work in southern California, eelgrass work in Washington, and oil spill response in the Gulf of Mexico.

Dan has experience with environmental permitting including Endangered Species Act Section 7 and Essential Fish Habitat consultation, California Department of Fish and Wildlife (CDFW) Streambed Alteration Agreements, CDFW Incidental Take Permits (2081), and biological resource assessments prepared for the California Environmental Quality Act (CEQA). His experience includes the preparation of technical documents and implementation of permit compliance, mitigation, and monitoring requirements for these permits. Dan has experience with special status species including: longfin smelt, tidewater goby, steelhead, Chinook salmon, Santa Ana sucker, unarmored threespine stickleback, California red-legged frog, California tiger salamander, burrowing owl, clapper rail, black rail, Swainson's hawk, Bay checkerspot butterfly, Callippe silverspot butterfly, pool fairy shrimp, and tadpole shrimp.

Representative Projects

County of Santa Clara, Bridge Scour Natural Environmental Studies, Santa Clara County, California

Twelve bridge locations within Santa Clara County were identified by Caltrans as having critical abutment scour necessitating repair. The Santa Clara County Roads and Airports Department, with funding from Caltrans, is completing the repairs, working with the Caltrans Office of Local Assistance. To complete these repairs, each bridge site was required to complete a Natural Environment Study (Minimal Impact) (NES MI) to evaluate the potential for impacts to biological resources, analyze permit requirements, and describe avoidance, minimization, and mitigation measures. Dan served as a lead biologist and his project work included site visits, design of mitigation and avoidance measures, and agency coordination in the preparation of the documents. Once permits were issued, including a National Marine Fisheries Service Biological Opinion, he lead fish salvage crews during dewatering activities.

Old Canyon Road Bridge Scour Repair Biological Surveys and Permitting, Fremont, California
WRA is teaming with David J. Powers & Associates and Schaaf & Wheeler to complete the environmental review and permitting studies necessary to repair scour on a bridge across Alameda Creek in Fremont, California. Alameda Creek is not currently an anadromous fish stream, but restoration will begin in 2014 to construct fish ladders and return anadromous steelhead to Alameda Creek. The Old Canyon Road Bridge currently presents a low-flow fish passage barrier due to the presence of poured concrete in the creek bed beneath the bridge. The bridge scour repair will remove the concrete and install rock protection around the bridge abutments. WRA prepared Caltrans biological resources documentation for the project and engaged with the National Marine Fisheries Service in a Technical Assistance for concurrence that the design would not be detrimental to fish passage once the downstream fish ladders had been completed. WRA worked with the project engineers to assess potential fish passage issues at the bridge and to develop plans for fish passage that meet the National Marine Fisheries Service and California Department of Fish and Wildlife standards for fish passage. Dan was the project lead fisheries biologist for WRA and was involved in the preparation of environmental documentation and resource agency permit applications.

Mare Island Ship Yard Dry Dock Fish Salvage, Vallejo, California
Marine vessels and barges are brought to the dry docks at the former Mare Island Naval Shipyard to be serviced and repaired. In accordance with permit requirements of USFWS, National Marine Fisheries Service (NMFS), and CDFW, biologists are required to be present during final stages of dewatering to salvage (rescue) stranded fish from the dry dock. Dan serves as project manager and lead fisheries biologist. He is responsible for leading field crews, coordinating with resource agency personnel, ensuring permit compliance, and authoring technical reports following each salvage event. He has also led consultation meetings, prepared biological assessments for the NMFS and USFWS permits, and assisted with amending an existing CDFW permit to reduce mitigation requirements for the dry dock. He is authorized to handle and relocate longfin smelt, Delta smelt, steelhead, Chinook salmon and green sturgeon at this site. This project is ongoing.

Pastori Avenue Bridge Outfall, Marin County, California
Dan served as the lead fisheries biologist for a bank stability and outfall project in San Anselmo Creek within the town of Fairfax. Project work included a multi-day fish rescue and relocation under the authorization of a NMFS Biological Opinion. Several juvenile steelhead were successfully relocated out of the work area prior to the initiation of construction. During project work, Dan identified the invasive New Zealand mudsnail in the creek, which had previously not been documented for this watershed. NMFS and CDFW were notified of the occurrence.

Caltrans Southern California Lagoon Study, San Diego County, California
California Department of Transportation is analyzing impacts and potential sources of mitigation for sensitive species and habitat for the Interstate 5 widening in San Diego County. As part of an analysis for increases in tidal inundation, Dan participated in wetland assessments and led field crews in biological assessments and topographic surveys within six coastal lagoons in northern San Diego County. During the biological assessments, several coastal California gnatcatcher pairs were identified and suitable breeding habitat for the species was mapped. The second phase of this project, which involves computer based simulation and analysis of increased tidal inundation, is ongoing.

Salmonid Habitat Assessment and Relocation in California
Dan has worked on several projects designed to assess potential habitat for salmonid species. Survey techniques include CDFG protocol level stream habitat assessment, red and carcass spawning surveys, substrate composition and permeability sampling, geomorphic surveys, water quality sampling and analysis, various forms of netting and trapping, and snorkel surveys for identification purposes. Survey work has been conducted in Napa, Sonoma, Shasta, Santa Clara, Monterey, San Luis Obispo, Santa Barbara, Ventura, and Kern Counties.

Permanente Quarry Aquatic Baseline, Santa Clara County, California
Permanente Quarry is a 3600 acre property located in western Santa Clara County at the northern extent of the Santa Cruz Mountains. As part of the quarry's planned expansion, Dan designed and implemented a study of the habitat and aquatic fauna of two headwater creeks on the property. The following field studies were completed as part of this work: fish were surveyed by seine and visually to determine species composition, distribution and relative abundance; nocturnal time-constraint visual encounter surveys were employed to document amphibian species composition, distribution and relative abundance; benthic macroinvertebrates (BMI) were sampled at eight representative locations in accordance with the California Stream Bioassessment Procedure (CSBP). The collected BMIs were sorted by taxa and the data analyzed according to accepted metrics; and a detailed physical habitat study was conducted to quantify the condition and value of the current aquatic habitat. A technical report was completed that will serve as a baseline of the available habitat and existing fauna within the two watersheds.

Grady Ranch Creek Restoration and Permitting, Marin County, California
As part of a proposed Grady Ranch Development in Marin County, a large scale creek restoration and fish passage improvement was designed and permitted. WRA provided biological services which included fish passage assessment, habitat mapping, fisheries surveys, California red-legged frog protocol level surveys, design review, agency consultation, permitting, and the preparation of long term monitoring plans. Dan served as the lead fisheries biologist for the project, and was involved with biological surveys, fish passage assessments, habitat mapping, consultation, and prepared a biological assessment to support the projects permits. While the project never went to construction, the restoration design was the process of receiving approval from the resource agencies.

Fish Passage Assessment in California
Dan has worked with several teams on the identification and assessment of fish passage barriers for anadromous species, which involved onsite qualitative habitat analysis and quantitative data collection utilizing a Total Station Survey Instrument. His survey work and professional assessments have been used as supplemental components to technical reports and as part of a state wide database that is in process for Caltrans. Fish passage assessments have been performed in various watersheds of Marin, Contra Costa, Monterey, Santa Barbara, Ventura and Los Angeles Counties.

Santa Clara River Estuary Habitat Restoration and Enhancement Feasibility Study, Ventura County, California
A Fisheries Restoration Grant Program through CDFW funded a feasibility study and conceptual design development for the restoration of estuarine fish habitat along the Santa Clara River Estuary. Following the preparation of an existing conditions technical report, stake holder outreach and restoration designs were crafted to focus on the conversion of an existing developed campground back to higher quality estuarine habitat. The campground would then be relocated from its current footprint. Dan served as the project manager and lead biologist. His work included a habitat assessment, report preparation, design review, participation in outreach meetings, and team management. The final feasibility report for the preferred concept will be released in 2015.

Napa Dry Bypass Flood Control, Napa County, California
As part of a comprehensive flood control program for Napa County, a high flow bypass channel and creek restoration at the confluence of Napa Creek and Napa River was constructed in downtown Napa. Dan served as the project's lead fisheries biologist, which involved fish rescue and relocation, otter trawl fish sampling, fish exclusion, pile driving monitoring, and daily construction checks. He also assisted Napa County Flood Control District with a permit amendment to the project's CDFW Incidental Take Permit. The completion of the dry bypass project resulted in increased flood capacity and improved habitat conditions for special-status fish including steelhead and longfin smelt.

Marin County Public Works Fisheries Services, Marin County, California
Marin County Department of Public Works (MCDPW) underwent maintenance sediment removal at multiple culverts in West Marin. WRA provided biological support services for the sediment removal, which included pre-construction California red-legged frog surveys, environmental training, fish rescue and relocation and biological monitoring. During fish relocation, tidewater goby was encountered in an area they had not previously been documented to occur. Following the project work, WRA prepared a supplemental biological assessment of tidewater goby addressing sediment removal activities for MCDPW. Dan served as the project manager, lead fisheries biologist, and authored the supplemental biological assessment.

Callippe Preserve, Pleasanton, California
The Callippe Preserve was established as mitigation for the construction of the Pleasanton Municipal (Callippe) Golf Course. As a component of the wildlife management plan and USFWS Biological Opinion, Dan has conducted hydrological monitoring, annual sampling for California Tiger Salamander, and required predator monitoring and removal within the Preserve Conservation Areas. In 2009, Dan discovered a new population of California red-legged frog within a Preserve Conservation Area pond. Predator removal via hand capture, hook and line, gigging, shooting, and dipnet capture continued throughout 2009 and 2010. Successful breeding of California red-legged frog was confirmed in 2010. In October 2010, Dan, with approval of the USFWS and the landowner, dewatered the pond using a gasoline-powered trash-pump to rid it of bass and bullfrogs. Monitoring is ongoing, however California red-legged frog breeding success is expected to improve in 2012. In the fall of 2013, non-native predatory fish were detected in the golf course irrigation ponds. Dan assisted with draining the ponds and eradicate the fish in compliance with the USFWS Biological Opinion and associated management plans. Dan assisted with the captured and retention of 22 CRLF during the dewatering. CRLF were released back into the irrigation ponds as soon as refilling resumed.

Frenchman's Creek Water District, San Mateo County, California
Frenchman's Creek Water District (FCWD) is a small water service provider located north of Half Moon Bay along coastal San Mateo County. A CDFW 1602 permit allows for the temporary installation of a flashboard dam and water withdrawal from the system. Dan serves as the fisheries biologist for this project and the FCWD, which involves monitoring flow and habitat conditions during the diversion period, permit compliance, and annual reporting. This project is currently ongoing.

Potrero Creek Restoration Carmel, California
Dan helped design, manage and implement the restoration of Potrero Creek, in the Carmel Valley, California. A large landslide altered the existing channel and was undermining a road. Dan aided with the design to restore the previous channel alignment and use the altered channel as a high water channel which would provide rearing habitat for steelhead and California red-legged frog. He conducted environmental training for the workers, pre and post restoration geomorphic surveys, served as the onsite biological monitor and restoration manager during construction, and assisted with the permitting of the project.

Draper Inverness Dock Permitting, Marin County, California
In accordance with permit requirements of USFWS and NMFS, Dan performed pre-construction eelgrass surveys at a dock replacement project in Tomales Bay. Dan also performed daily construction monitoring for all inwater work, conducted environmental sensitivity training to on-site construction staff, and monitored environmental permit compliance for the project. Construction involved removal of creosote piles and installation of eelgrass friendly deck grating that allows light to penetrate beneath it. Following the construction of the dock, Dan led annual monitoring work to document the project effect on the eelgrass bed. Monitoring was completed in 2012 when the eelgrass bed was confirmed to have recovered to pre-construction conditions.

PATRICIA VALCARCEL, MS

Wildlife Biologist

valcarel@wra-ca.com

o: 415.454.8868 x1220

Years of Experience: 9

Education

MS, Wildlife Sciences, Oregon State University, 2011

BA, Environmental Sciences, Northwestern University, 2003

Professional Affiliations/ Certifications

USFWS Recovery Permit for giant gartersnake and San Francisco gartersnake (TE-64146A)

California Department of Fish and Wildlife Scientific Collecting Permit

The Wildlife Society

Specialized Training

- Biology and Management of the Alameda Striped Racer, Alameda County Conservation Partnership, May 2014
- San Joaquin Kit Fox Ecology, Conservation, and Survey Techniques, Central Coast Chapter of The Wildlife Society, Summer 2013
- Swainson's Hawks in California's Central Valley, Sacramento-Shasta Chapter of The Wildlife Society, Spring 2012
- Workshop on the Biology and Conservation of the California Tiger Salamander, Alameda County Conservation Partnership, June 2012
- Amphibian Inventory and Monitoring Protocol, Northwest Partners in Amphibian and Reptile Conservation, Spring 2011

Patricia Valcarcel earned a MS in Wildlife Sciences while conducting research on the spatial ecology of the threatened giant gartersnake. She has worked on a variety of field research projects ranging from animal movements to behavior and reproduction. She has presented her work at many conferences and published in peer-reviewed journals.

Patricia has extensive experience working with giant gartersnakes in the Sacramento Valley and assisted with mark-recapture surveys for San Francisco gartersnakes in San Mateo County. She has performed surveys and other activities related to California red-legged frog in Alameda, San Mateo, Los Angeles, Solano, and Sonoma Counties. Patricia also has extensive experience throughout California's Central Valley including protocol-level surveys for Swainson's hawk, burrowing owl, and assessments for San Joaquin kit fox and blunt-nosed leopard lizard. In addition, she has conducted observations and coordinated compliance for Pacific herring spawning in San Francisco Bay.

Patricia's primary responsibilities are to conduct surveys, habitat assessments, and write associated biological assessment and technical reports for special-status wildlife species. She has experience with the San Joaquin County Multi-Species Habitat Conservation Plan as one of the on-call biologists for the San Joaquin Council of Governments. In addition, Patricia is involved in environmental permitting, permit compliance, and mitigation and monitoring efforts associated with these permits.

Representative Projects

East Bay Municipal Utility District Mokelumne Aqueduct Project, San Joaquin County, California 2012 – 2013

Recoating of the Mokelumne Aqueduct Phase 8 – Slough Crossing Project will be conducted at four project sites located in San Joaquin and Contra Costa counties. In accordance with permits, a USFWS-approved giant gartersnake biologist is needed to perform pre-construction surveys and compliance monitoring. Patricia holds a USFWS Recovery Permit for giant gartersnake and was approved to perform the pre-construction surveys. She also monitored a Swainson's hawk nest within the Project Area to confirm nesting status of the pair and EBMUD compliance with avoidance measures.

San Joaquin Council of Governments, San Joaquin County, California 2012 – Present

WRA is contracted for on-call services related to the San Joaquin County Multi-Species Habitat Conservation and Open Space Plan (SJMSCP). Patricia has performed pre-construction surveys and recommended avoidance and minimization measures to ensure participants are in compliance with the SJMSCP. Wildlife species and habitats Patricia has encountered as part of this work include burrowing owl, California tiger salamander, and Swainson's hawk. In addition, Patricia prepared and consulted with the California Department of Fish and Wildlife on a burrowing owl exclusion plan. Following approval by CDFW, Patricia implemented the exclusion and monitoring plan.

Ridge Top Ranch Wildlife Conservation Bank, Solano County, California 2012 – 2015
WRA and Ridge Top Ranch, LLC (RTR) are in the process of developing over 280 acres of high quality California red-legged frog and callippe silverspot butterfly mitigation habitat located within Solano County, California. WRA, in consultation with the USFWs and under 10(a)(1)(A) Recovery Permit TE-212445-0, successfully translocated California red-legged frogs to created habitat within the RTR Wildlife Conservation Bank. WRA has been involved throughout the process, from selecting donor sites and planning habitat creation, to translocation of egg masses and monitoring the frogs to ensure that establishment at the receiving site was successful. Through the monitoring phase, Patricia assisted permit-holder Rob Schell in survey efforts, which included egg mass surveys at the donor site, visual counts at the receiving ponds, as well as the capture and handling of juvenile red-legged frogs to measure and install PIT tags. She also conducted a Callippe silverspot butterfly survey as part of annual monitoring efforts. Monitoring at this site is ongoing, and the Conservation Bank is in the final permitting stages.

Napa Valley Marina Permitting and Dredge Monitoring, Napa, California 2012 – Present
The Napa Valley Marina is an active recreational marina along the Napa River near Bull Island. Maintenance dredging of the Marina is necessary for boat access to and from the Napa River. Patricia is involved with a variety of environmental consulting services for the maintenance dredging including preparation of applications for the Dredged Materials Management Office (DMMO) and the California Department of Fish and Wildlife Streambed Alteration Agreement. Maintenance dredging permits included monitoring for special-status species and habitat conditions such as temperature and salinity monitoring for longfin smelt. Patricia oversees monitoring and compliance surveys for the multi-year maintenance dredging project.

Port of Richmond Inner Harbor Maintenance Dredging, Richmond, California 2014 – 2015
Maintenance dredging of the Port of Richmond Inner Harbor Channel was necessary to maintain passageways for the active port. The Pacific herring is a protected fishery, and dredging operations within the Pacific herring spawning season were unavoidable. Patricia was a California Department of Fish and Wildlife approved observer for the Project, and she coordinated a team of observers for the maintenance dredging Project. One spawning event occurred within the Project Area during dredging activities and Patricia consulted with CDFW to establish buffers. All Project activities were completed in compliance with the Project's Pacific Herring Work Window Waiver.

Bruno's Island Bridge Repair Project, Southwestern Sacramento County, California 2014
Bruno's Island is a small recreational boat harbor located off Andrus Island along the San Joaquin River in the western Delta. Bridge repair activities included sheathing piles within the channel and could potentially affect listed aquatic species. Patricia provided the hydroacoustic analysis and wrote the Section 7 Biological Assessment for Delta smelt, steelhead, and giant gartersnake. Through her work and advising on project design such as strike limits and use of bubble curtains outside of the work windows, a "Not Likely to Adversely Affect" was received from both NMFS and USFWS. This Project was completed in 2014.

12 Bridges, Santa Clara County, California 2012 – 2013
WRA was engaged by the County to prepare Natural Environment Study (Minimal Impact) reports, permitting documents, and Revegetation and Monitoring Plans for twelve bridges with critical abutment scour located throughout Santa Clara County, California. Patricia aided in the preparation of the Section 7 Biological Assessments for six of the bridges which incorporated California red-legged frog, California tiger salamander, Least Bell's vireo, and salmonid species. Based on those plans, she has conducted the pre-construction surveys and biological monitoring required by the U.S. Fish and Wildlife Service Biological Opinion in 2012 and 2013 work seasons.

Burrowing Owl Surveys and Passive Exclusion, Legacy on 101, San Jose, California 2014
The Legacy on 101 project is a 16.35 acre property in Santa Clara, California that is to be developed into two 6-story industrial park/office/R&D buildings. The area is known to support burrowing owl, and a series of take avoidance surveys was conducted from 2008 to 2014. Patricia observed one burrowing owl occupying the property in 2014. Patricia developed the exclusion and monitoring plan submitted to CDFW. During the non-nesting season, she passively excluded the owl and excavated all potential burrows at the site. Patricia conducted monitoring at the site every other week until construction activities were initiated and performed a pre-construction survey immediately prior to grading, per the exclusion plan.

Napa Dry Bypass, Napa, California 2014
The Napa Dry Bypass is designed to divert 100 year flows around the oxbow reach to avoid flooding the Soscol Gateway area in downtown Napa. Patricia is a CDFW-approved biologist for this Project, and Patricia has been involved with this project by monitoring compliance and construction activities during excavations of the new river channel, as well as assisting with fish rescues within the coffer dams. Project permits include Biological Opinions from National Marine Fisheries Service and California Department of Fish and Wildlife Incidental Take Permits for steelhead (Central California Coast DPS), Delta smelt, and longfin smelt.

Marin County Department of Public Works Flood Control Line Replacement, San Rafael, California 2013
The Marin County Department of Public Works manages flood control projects throughout the county, including the city of San Rafael. The project consists of replacing an aging flood diversion pipe in a low-lying residential area adjacent to the south fork of Gallinas Creek. The project area is located in a salt marsh slough and has known populations of California clapper rail and salt-marsh harvest mouse. Patricia was a USFWS-approved biological monitor for the project and has monitored construction to ensure compliance with the project's regulatory permits. Several California clapper rails were observed at short range and within the project area, and Patricia stopped work activities until the birds had safely left of the own volition.

Fitzgerald Marine Reserve Coastal Trail, San Mateo County, California 2012 – 2013
The Fitzgerald Marine Reserve project includes the design of a portion of the California Coastal Trail in San Mateo County, California. Major components of the project, in addition to the multi-use trail, included a free span pedestrian bridge and improved beach access and overlook. WRA provided environmental services in support of the proposed trail and public access improvements, and existing sensitive habitats were avoided to the extent possible in the public access design. WRA prepared the conceptual designs for the trail and improved access to the overlook and beach, performed wetland delineations, completed biological surveys, and prepared permit applications. As part of this process, Patricia was approved by the U.S. Fish and Wildlife Service under the Biological Opinion for the project to perform the pre-construction surveys and monitoring for San Francisco gartersnake and California red-legged frog. In addition, she provided advice on the design and materials for the wildlife exclusion fence, and oversaw its installation.

Nicholas Brinton, BS
Fisheries Biologist
brinton@wra-ca.com
o: 415.454.8868 x1780
c: 909.275.2358

Years of Experience: 3

Education
BS Wildlife, Fish and Conservation Biology, UC Davis, 2012

Professional Affiliations/ Certifications

American Fisheries Society

Nick holds a B.S. degree in Wildlife, Fish and Conservation Biology from the University of California, Davis. His coursework included ichthyology, mammalogy, ornithology, waterfowl and wetland management, population dynamics and invasive plant ecology.

Prior to joining WRA, Nick worked as a biological monitor on a transmission line project where he gained experience working with California tiger salamander, western spadefoot toad and nesting birds. In addition, he worked for two years as a Fisheries Technician in both the private and public sector. His work primarily revolved around population monitoring, invasive species removal, water quality and habitat assessments. He has worked extensively with Lahontan cutthroat trout and native species of the Sierra Nevada Mountains. Nick has also worked with the UC Davis Museum of Wildlife and Fish Biology and performed a cursory study on small mammal distribution throughout the state of North Dakota. He conducted live-trapping and collected specimens for the museum. The data collected was presented to the museum and the Smithsonian Institute in support of follow-up studies.

With WRA, Nick conducts fish salvages, habitat assessments, biological monitoring, focused wildlife surveys, and writes biological assessment reports. He has trained with Rob Schell, a U.S. Fish and Wildlife Service Recovery Permit holder for California red-legged frog (CRLF); Jason Yakich, Recovery Permit holder for California clapper rail (CCR); and Kate Allan, Recovery Permit holder for salt marsh harvest mouse (SMHM).

Representative Projects

Amy's Kitchen, Rohnert Park, California, 2014 – Present
During construction of facilities for Amy's Kitchen in Rhonert Park, Nick was approved by CDFW as a biological monitor for California tiger salamander (CTS). During the course of the project, Nick monitored for environmental compliance at the site to assure that there was no take of covered species during construction. To date, no take of CTS has occurred.

Port of Richmond Inner Harbor Maintenance Dredging, Richmond, California 2014 – 2015
Maintenance dredging for the Port of Richmond Inner Harbor Channel was conducted in the winter of 2014 to maintain passageways for ships entering the port. Pacific herring is a protected fishery, and dredging operations within the harbor overlapped with the Pacific herring spawning season. Nick was an approved California Department of Fish and Wildlife observer for the Project. During operations, one spawning event occurred within the Project Area. Nick observed the spawning event and informed crews on the required buffers to maintain compliance. All Project activities were completed in compliance with the Project's Pacific Herring Work Window Waiver.

Mare Island Ship Yard Dry Dock Fish Salvage, Vallejo, California 2014, - Present
Mothballed vessels from the National Defense Reserve Fleet in Suisun Bay and private ships needing repair are brought to the dry docks at the former Mare Island Naval Shipyard. In accordance with permit requirements of USFWS, National Marine Fisheries Service (NMFS), and CDFW, biologists are required to be present during final stages of dewatering to salvage (rescue) stranded fish from the dry dock. Captured fish are placed in aerated holding coolers, identified to species, counted and measured before being returned to the Mare Island Channel of the Napa River. Nick is a lead fisheries biologist for this operation. He is responsible for leading a team of biologists who conduct salvage operations. He also coordinates with resource agency personnel, ensuring permit compliance, and writes technical reports following each salvage event. He is authorized to handle and relocate longfin smelt, Delta smelt, steelhead, Chinook salmon and green sturgeon at this site. This project is ongoing.

Healdsburg Veterans Memorial Dam Spillway Repair, Healdsburg, California, 2014
The Healdsburg Veterans Memorial Dam is a flashboard dam located within the city of Healdsburg on the Russian River. The dam is installed seasonally to create a temporary recreational lake. For this project, Nick was approved as the lead fisheries biologist, and biological monitor. He conducted pre-construction surveys for breeding birds as well as pacific pond turtle (PPT), and positively identified PPT in the project area. As the lead fisheries biologist he lead a team of biologists who performed multiple fish salvages within the project area following de-watering events. His team successfully identified, and safely re-located steelhead that were salvaged during the dewatering. Nick also conducted biological monitoring for PPT and special-status fish throughout the duration of the project to ensure that project activities were in compliance with agency permits. He conducted pre-construction checks, environmental trainings, and water temperature monitoring. The project was completed in compliance with relevant permits with no take of any special-status species.

Frenchman's Creek Water District, San Mateo County, 2013 - Present
Frenchman's Creek Water District (FCWD) is a small water service provider located north of Half Moon Bay along coastal San Mateo County. A CDFW 1602 permit allows for the temporary installation of a flashboard dam and water withdrawal from the system. Nick serves as a fisheries biologist for this project, which involves monitoring flow and habitat conditions for steelhead during the diversion period, permit compliance, and annual reporting. This project is currently ongoing.

Napa Dry Bypass, Napa, California, 2014 - Present
The Napa Dry Bypass is designed to divert 100 year flows around the oxbow reach of the Napa River to avoid flooding the Soscol Gateway area in downtown Napa. Nick has been approved as a lead fisheries biologist on this project and has conducted multiple fish salvage operations for longfin smelt, and steelhead. Nick also assisted in the otter trawl surveys and fish exclusion work which were required during impact hammer pile driving operations. He has also been involved with this project by monitoring compliance and construction activities including impact hammer pile driving. In addition, he assisted in the design and implementation of the environmental awareness training program to comply with both the streambed alteration agreement and incidental take permits. This project is ongoing.

Pristine Sun Solar Projects Pre-construction Surveys, California, 2014-Present
WRA was contracted to implement environmental compliance measures for several Pristine Sun projects. Projects involved creating 0.5-1 MW solar generation facilities in Glenn, and Shasta Counties. As part of these measures, Nick performed pre-construction surveys for Swainson's hawk, white-tailed kite, long-eared owl, burrowing owl, and breeding birds at two sites.

APPENDIX C. CULTURAL RESOURCES REPORTS

Under separate cover and available for review at the Town of Fairfax.

APPENDIX D. HYDROLOGY STUDIES

Looking Downstream to Fairfax Creek from the Upstream Face of Marin Road Bridge (December 19, 2014)

Location Hydraulic Study Report

Fairfax Creek at Marin Road Bridge (Br. No. 27C-0143)
Fairfax, California
January 2016

geomorph DESIGN

Prepared by:
Matt Smeltzer, P.E.
Geomorphologist/Hydrologist
CA Civil Engineer #71671

Location Hydraulic Study Report
Fairfax Creek at Marin Road Bridge (Br. No. 27C-0143)
Fairfax, California
January 2016

Submitted to Town of Fairfax

This Location Hydraulic Study Report was prepared by a California Registered Professional Engineer using best available published hydrology and hydraulic information for the subject site in lieu of original hydraulic model analysis of the channel and bridge opening based on current channel topographic survey data. Best available hydrology and hydraulic information is deemed adequate for this analysis because the physical changes to the bridge inlet and outlet caused by the proposed bridge maintenance measures are evaluated to be sufficiently minimal such that the water surface elevation and scour effects are negligible and otherwise mitigated by design configuration of the measures and other proposed mitigation measures incorporated by the project. Limitations of this analysis are reviewed herein.

_____
Matt Smeltzer, P.E.
Registered Civil Engineer No. C71671

_____
Date

Table of Contents

Summary of Findings 4

Project Location 6

Purpose and Need 7

Project Description 7

Summary Potential Hydraulic Difference between Project and No-Project 9

Geomorphic Setting 9

Site Hydrology 11

Available Hydraulic Model Calculations for Existing Conditions 12

Potential Hydraulic Effects of Project Alternative and Recommended Mitigation Measures . . . 15

Scour Analysis and Recommended Mitigation Measures 16

Limitations of this Analysis 17

References Cited 17

Summary of Findings

Multiple bridge maintenance measures are proposed under the CalTrans Bridge Preventative Maintenance Program (BPMP) near the inlet and outlet of Marin Road Bridge spanning Fairfax Creek in Fairfax, California. This Location Hydraulic Study Report evaluates the potential effects that these BPMP measures may have on flood water surface elevation and channel bed scour, and proposes appropriate mitigation measures, if necessary. This analysis is according to the BPMP Design Plans prepared by California Infrastructure Consultancy (Sheets 7-9) and best available hydrology and hydraulic model information. A complete project description is contained in this report at page 7.

Of the four Marin Road Bridge BPMP measures outlined in the project description, three measures may have an impact on flood hydraulics and/or channel bed scour:

- Repairing the upstream right wingwall in place. The foundationless and thereby tension-cracked existing vertical concrete upstream right bank inlet wingwall would be repaired and reinforced in place with special grout and provided suitable foundation and scour protection by installing riprap behind and beneath the hanging wall toe. Riprap would be installed to fill void space beneath and behind the cracked wingwall and for forming an approximately 8-ft-long, 2-ft-wide, 2-ft-deep riprap prism toe in front of the wall. The riprap prism would be set to extending from existing bed grade to minimum 2-ft below existing bed grade. The riprap filling the void space behind and directly beneath the hanging wall toe would be carefully placed and steeply finish face sloped to minimize encroachment creekward from the wingwall toe. However, some creekward encroachment from the existing wall face would be required for achieving wall toe foundation stabilization objectives with riprap;

- Repairing the toppling downstream left wingwall in place. The existing cracked, slumped, and rotated bank-sloped concrete downstream left wingwall would be repaired and reinforced in place by grouting, soil nailing, shotcrete facing, and drill-and-bond connecting the existing wingwall repair section to the existing headwall; and,

- Repairing the rock slope protection (RSP) around the repaired-in-place downstream left wingwall. The existing slumped and rotated downstream left wingwall to be repaired and reinforced in place (above) would be provided improved scour protection and downstream bank erosion protection by removing the light rocks comprising the existing perimeter scour protection and installing appropriately sized riprap to provide bed scour protection along the toe of the repaired wall and bank surface erosion protection along the downstream edge of the repaired wall. An approximately 12-ft-long, 2-ft-wide, 2-ft-deep riprap prism would be installed on the bed at and below existing bed grade along the creekward toe of the repaired wall. An approximately 8-ft-high, 3-ft-long, and 2-ft-deep rip-rap prism would be installed on the bank at and below existing bank grade immediately downstream from the repaired wall. Overall, removing the existing failed light rock reinforcement from the bed and bank and replacing with properly sized and configured rock would serve to increase the hydraulic flood flow capacity of

the bridge opening by removal of existing rock material encroaching creekward of the appropriate bed/bank envelope, especially within the bridge outlet cross-section.

Through design coordination with the Project Team, the BPMP measures have been designed to avoid and minimize potential effects on water surface elevation, scour depth, and downstream bank stability. This analysis concludes that these BPMP measures would have a minor to *de minimus* impact on water surface elevation, bed scour, and downstream bank stability. This analysis further concludes that implementing the proposed measures would not substantially increase the Base Flood Elevation or otherwise increase potential for backwater damages to residences, other buildings, crops, or natural beneficial floodplain values. The measures would not substantially increase the potential for overtopping of Marin Road Bridge surface as may disrupt traffic or impact school bus or mail routes, emergency vehicle access, or emergency supply or evacuation routes.

However, mitigation measures are recommended (at p. 15) for further ensuring the project will not raise flood water surface elevations and for accommodating expected long-term permanent bed elevation decline and temporary scour during large floods.

This Study concludes that implementing the proposed BPMP measures at Marin Road Bridge – with or without also implementing the recommended mitigation measures – would cause no floodplain encroachment and minimal or negligible impact to flood water surface elevations. Therefore, a Summary Floodplain Evaluation Report has been completed for the project.

Figure 1 – Location Map Marin Road Bridge Site.

Project Location

The Marin Road Bridge (site) is about 0.6 miles north-northwest of the downtown center of Fairfax, California (Figure 1). At the site, the bridge spans Fairfax Creek at a location about 135 feet west of Sir Francis Drake Blvd -- near decimal degrees latitude 37.993 N, longitude 122.595 W.

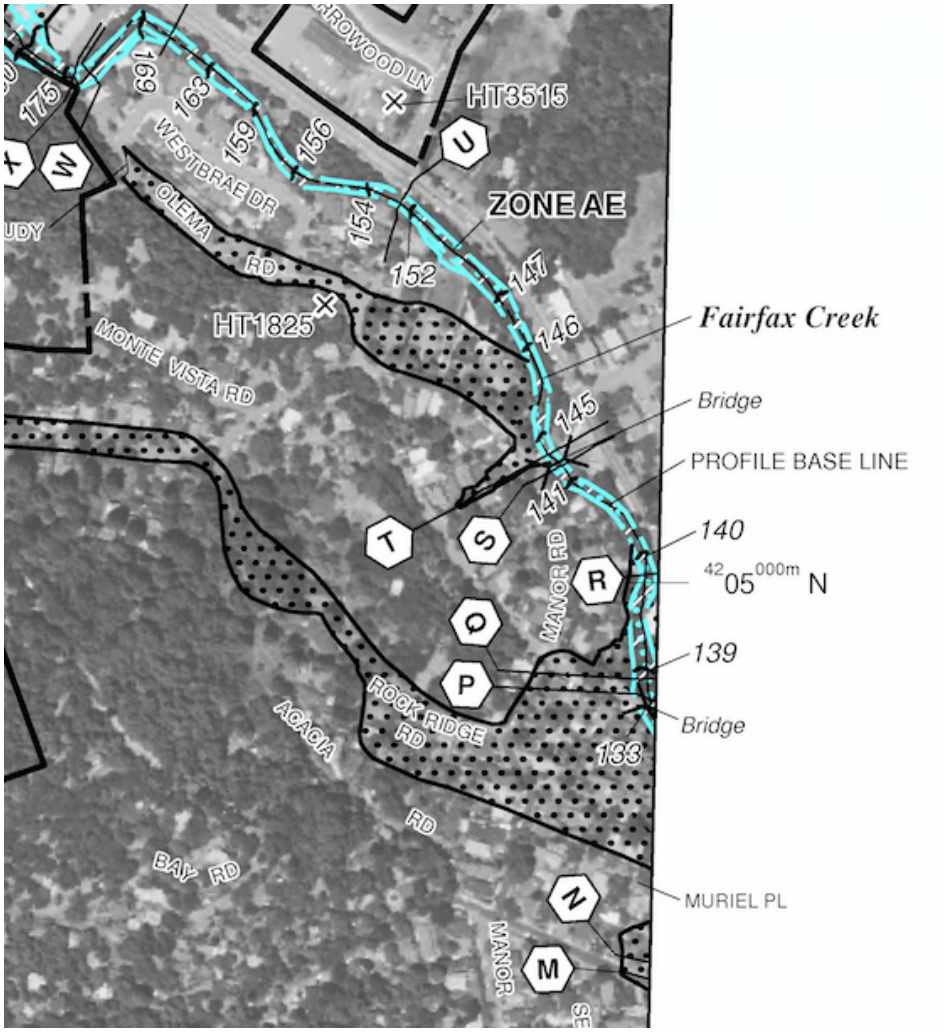

Figure 2 – Excerpt from 2014 FEMA FIRM Panel 451 showing the regulatory floodway and Special Flood Hazard Areas (SFHAs) in the vicinity of Marin Road Bridge Site.

Fairfax Creek originates on the southeastern flank of Loma Alta and flows through Fairfax as tributary to San Anselmo Creek in Fairfax. San Anselmo Creek becomes named Corte Madera Creek in Ross, California, and drains to Corte Madera Creek estuary and San Francisco Bay near Larkspur, California. The Marin Road Bridge spans Fairfax Creek about 1,845 creek feet downstream from "Westbrae Dam" bordering Olema Road, and about 735 creek feet upstream from Olema Road Bridge. According to the March 17, 2014 updated FEMA Flood Insurance Rate Map (FIRM Panel 451), the 1% annual chance flood is contained within the channel area of Fairfax Creek in the reaches immediately upstream and downstream from Marin Road Bridge (Figure 2).

The site occurs within a floodway designated by the March 17, 2014 FIRM revision. The FIRM implies that overland flooding resulting from the 0.2% annual chance flood and potentially shallow flooding resulting from the 1% annual chance flood originating from overflow onto Olema Road more than about 2,000 creek feet upstream from the site passes into Fairfax Creek over the right bank vertical concrete retaining wall immediately upstream from the site.

Purpose and Need

Concrete wingwalls at the inlet and outlet of Marin Road Bridge are in failed/failing condition requiring stabilization by reinforcement in place and placement of rock riprap toe foundation protection. The measures are needed for preventing ultimate complete failure and concomitant potential creek bank destabilization and/or temporary partial blockage of the bridge opening during floods, potentially damaging downstream private property by bank erosion effects and/or temporarily increasing the water surface elevation affecting multiple properties upstream from the site.

Project Description

Marin Road Bridge is a single span concrete earth-filled closed arch structure, constructed over Fairfax Creek presumably circa 1930. The exact date of the construction of the bridge may be different. The bridge is on a residential street leading to Sir Francis Drake Boulevard, a major arterial through the town of Fairfax. The structure is approximately 41 feet long and a little over 26 feet wide. It supports two lanes of traffic nearly 10 feet above the creek bed. There are no as-built plans available from the original design of the bridge, though a new General Plan (GP) from field measurements has been developed for the bridge. There are no sidewalks on the bridge but a separate steel pedestrian/bicycle bridge exists for non-motorized travelers immediately upstream of this bridge. (The latter bridge is not in the program.)

Marin Road Bridge is not eligible for National Register of Historic Places (NRHP) listing. It has a Sufficiency Rating (SR) of 68.0, but is flagged as neither Structurally Deficient (SD) nor Functionally Obsolete (FO) in the latest (2014) Caltrans Bridge Inspection Report (BIR).

The BPMP repairs for Marin Road Bridge and the method of construction will consist of:

- Repairing the toppling downstream left wingwall in place. The leaning, rotating and separated concrete wingwall on the southeast side (downstream of the bridge) will be repaired in place. The wingwall is approximately 10 feet long and eight feet high. It will be reconnected to the existing bridge with steel dowels and rebar tied to its reinforcement, exposed by removing a strip of the wingwall concrete next to the bridge. The wingwall will be surfaced with a fresh layer of lightly-reinforced air-blown concrete (shotcrete), and stabilized with at least a couple of soil nails pinning it to the soil. Soil nails are steel tension elements placed in holes drilled through the concrete wingwall and the soil behind it for a distance of approximately 15'-20', inclined at an angle of 15 degrees. The ends of these tension elements are buried in a bulb of grout pumped into the end of the drilled hole, called bond zone, allowing the bond zone to mobilize the soil through friction. The other end of the tension elements will protrude out of the wingwall surface and buried in the wingwall concrete overlay, anchored with special hardware and tensioned slightly to take the slack out of the line, creating a fastening system that will disallow the future movements of the wingwall.

- Repairing the rock slope protection (RSP) around the repaired-in-place downstream left wingwall. The light rocks making up the scattered riprap will be collected and a course of rock riprap will be sized suitable for the top anticipated creek flow velocity. The soil volume below the bottom of the wingwall will be excavated along the front for a width and depth of two feet each to create a trench to place the rock in as a buttress against future scour. On the free edge of the wingwall not connecting with the bridge headwall a similar type of excavation will take place to place rock and connect to the RSP buttressing at the foot of the wall, in essence, surrounding the two exposed edges of the wingwall with rock riprap. Excavation at the edge of the wingwall for the RSP will be done manually and with small power equipment. The surface of the rock riprap will be flush with concrete wingwall, the creek bed and the embankment in order not to protrude into the waterway and impact the flows or flow capacity. The trenches housing the RSP will be lined up with special geotextile fabric to prevent the migration of the finely grained soil particles and erosion of the soil around the rock.

- Repairing the upstream right wingwall in place. This second wingwall is on northwest side (upstream of the bridge) and vertical. It comes into the bridge headwall at an angle and is undermined, cracked horizontally near the bottom for five-six feet and dropped five to six inches below the crack due to gravity. The repair work will consist of cleaning the damaged and cracked concrete, patching the crack with special grout to prevent the further deterioration of this bridge structural element and burying some rock below the creek bed surface and in front of the wingwall to arrest its further undermining. Again, the surface of the rock riprap will be flush with the creek bed in order not to protrude into the waterway and impact the flows or flow capacity. Geotextile lining will be placed around the rock riprap here as well.

- Repairing structural concrete spalls in the soffit of the structure. This is a manual operation on a handful of such structurally damaged spots in the concrete. After cleaning the rust from the steel rebars and removing the unsound concrete within the spall, a special agent, such as epoxy

grout, will be applied and made flush with the concrete surfaces to protect the reinforcement and patch the concrete.

An Area of Potential Effects (APE) drawing and a preliminary Bridge General Plan for the repairs have been developed for this bridge work. The work will be at both the deck and below deck levels and is expected to take as many as ten working days from start to finish. The bridge will remain entirely open to motorized and non-motorized traffic. A flag person directing traffic at times may be necessary but traffic queuing is not expected.

Summary Potential Hydraulic Difference between Project Alternative and No-Project Alternative

Under the Project Alternative, the failed/failing inlet and outlet wingwalls would be repaired and reinforced in place – in the same position and configuration – as would have no effect on existing conditions or No-Project conditions flood flow hydraulics. However, stabilizing the inlet wingwall with riprap scour protection would necessarily encroach creekward from the face of the hanging wall toe, thereby minimally reducing the hydraulic flood flow capacity immediately upstream from the bridge inlet cross-section. Furthermore, installation of riprap scour protection at and below the creek bed elevation at the base of the reinforced inlet wingwall would reduce the scour depth during floods and thereby somewhat further reduce flood flow capacity at the bridge inlet cross-section. At the same time, replacing the failed riprap scour protection along the toe of the repaired in place downstream left bank wingwall would provide a commensurate *increase* in flood flow capacity at the bridge outlet. And installing new riprap scour protection along the toe of the repaired left bank wall would not decrease flood flow capacity by limiting scour depth during floods because the existing failed riprap scour protection currently effectively limits scour depth.

Therefore, overall, the proposed BPMP measures, as currently designed, in combination, would cause none, negligible, or *de minimus* increase flood water surface elevations.

And by also implementing the mitigation measures recommended in this report (at p. 15), the BPMP work would overall provide a negligible or *de minimus* decrease in flood water surface elevation.

Geomorphic Setting

The site occurs within a variably and in places very narrowly channelized reach of Fairfax Creek bordering Sir Francis Drake Blvd where the drainage area is about 2.6 square miles. The channel bed is sloped about 1.1% upstream from the site and 0.9% downstream from the site. Under existing conditions, ongoing intact geomorphic processes appear to be reinforcing a combination of meandering gravel-bedded pool-riffle and gravel-and-cobble-bedded plane-bed channel types (e.g., Montgomery and Buffington 1993).

However, pool-riffle sequence and inset floodplain development by channel meandering processes is strongly limited by severe confinement caused by historical channelization, historical channel bed incision, and construction of multiple non-deformable bank stabilization structures on private properties bordering the creek. Significant reach-scale changes requiring massive mobilization of dominating forced riffle bedforms, which appear to only result from very large floods capable of mobilizing large foreign rock and broken concrete materials dominating the bed framework materials at riffles. Large parts of many high-elevation coarse gravel bars established by the 1955 flood remain primarily intact in the reach, especially where root-reinforced by alder trees (*Alnus rhombifolia)* that established on the bar surfaces shortly after the flood (Stetson Engineers Inc. et al. 2000, Fluvial Geomorphology Consulting 2006). Short reach-scale and site-scale channel changes may also result from bank failures and tree-throw during more frequent smaller peak flows.

Decades of broken concrete rubble and facing- to light-class rip-rap discharging into the channel from failed bank erosion protection structures and demolished-in-place creek bank retaining walls and bridge pier foundations has created an unnaturally high supply of fixed or infrequently mobilized large cobble and small boulder sized bed material in Fairfax Creek. Forced riffles set by large floods contain a substantial percentage of the bed material larger than large cobble to small boulder size material. Coarse materials prevent riffles from being substantially deformed by smaller than 10-25-year floods, effectively preventing reach-scale changes to the riffle and pool locations and spacing.

Fairfax Creek became deeply incised beginning at the end of the 1800s and throughout the early 1900s (Stetson Engineers Inc. 2000). By the time of FEMA's 1976 cross-section surveys for hydraulic model development (FEMA 1977) the bed elevations had reached practical minimum reinforced by multiple bedrock outcrops on the bed and low banks (typically well consolidated fine brown to gray sandstone, and often deeply weathered poorly consolidated fine brown sandstone exposed as dense clay) and grade controls created by concrete-floor bridge culverts and discharged large broken concrete debris.

Minimum bed elevation (thalweg elevation) measurements made at FEMA cross-section locations immediately upstream and downstream from Marin Road Bridge in 1999 showed minimal or negligible bed elevation differences from FEMA's 1976 survey (Stetson Engineers Inc. 2000). Comparing FEMA's 1976 and ca. 2010 minimum bed elevation profiles shows the bed elevation is relatively stable near the site (Table 1).

The 1976 downstream measurement was made 50 feet downstream from the bridge section while the ca. 2010 measurement was made about 25 feet downstream from the section. Some of the elevation difference (rise) shown downstream from the bridge is the result of surveying across a higher position on the steep riffle downstream from the bridge. The ca. 2010 downstream bed elevation is only about 0.5 feet higher than the 1976 elevation measured at the same location immediately downstream from the culvert outlet. The position of the riffle is not believed to have changed appreciably from 1976 to 2010 because it is forced by the high, coarse, alder root-reinforced right bank gravel bar immediately downstream from the bridge opening (see cover photo). It is plausible that the riffle crest position and elevation have varied somewhat at the site in response to scour and redeposition of the riffle bedform surface materials during the 1982 and 2005 floods.

Table 1.
Comparison of 1976 and 2014 Minimum Bed Elevation Survey Data Immediately Upstream and Downstream from Marin Road Bridge.

Survey Year	Minimum Bed Elevation (feet NAVD88) Upstream from Marin Road	Minimum Bed Elevation (feet NAVD88) Downstream from Marin Road	Source
1976	134.6	131.6	FEMA (1977)
ca. 2010	134.0	133.5	FEMA (2014)

Repeat site inspections made at the site mid-November and mid-December 2014 determined that none of the dominant larger-sized bed materials presumably emplaced in the December 31, 2005 flood were mobilized by the December 3 and December 12, 2014 high flows. Much larger flows are required to substantially scour the riffle at the bridge section. It appears that substantially deep scour may only occur at the inlet and outlet of the bridge opening during very large floods (e.g., 1982, 2005).

The riffle crest elevation occurring within the bridge culvert approximately mid-way through the bridge section is made high by the massive high-elevation coarse-grained alder root-reinforced right bank gravel bar immediately downstream from the bridge opening. Removal of the alder tree and the portion of the gravel bar reinforced by the alder roots, along with select removal of sediment grains larger than approximately 90 mm diameter contained in the riffle surface materials within the bridge section appears would allow for a lower elevation riffle to establish within the bridge section, possibly also at a section farther downstream from the center of the bridge culvert. These interventions would increase flood flow capacity of the bridge by lowering the bed elevation within the bridge section, allowing for deeper scour during small more frequent floods, and eliminating the potential for large floated debris to catch on the alder tree near the culvert outlet.

Site Hydrology

FEMA (2014) used regional regression equations to estimate various return interval peak flood discharges at locations upstream and downstream from the Marin Road Bridge site, from which estimates can be drawn for the site via drainage area apportioning (Table 2).

According to the Marin County Capital Improvement Plan Study (Stetson Engineers Inc. et al. 2011) the December 31, 2005 flood was estimated to peak near about 1,645 cubic feet per second (cfs) on Fairfax Creek at the inlet to Sherman Avenue culvert. Although it is generally believed that the 2005 flood was

nearly a 100-year flood throughout most of the larger Corte Madera Creek watershed, the 1,645-cfs estimate is about the same as the 50-year peak flow estimated there by FEMA (2014) (1,661 cfs at Table 2).

Table 2.
Estimated peak flood flows at Marin Road Bridge (Site) determined by drainage area apportioning from FEMA (2014) published estimates at upstream and downstream Fairfax Creek locations.

Location	Distance upstream from mouth (ft)	Drainage Area (sq mi)	FEMA (2014) 10-Year Peak (cfs)	FEMA (2014) 50-Year Peak (cfs)	FEMA (2014) 100-Year Peak (cfs)	FEMA (2014) 500-Year Peak (cfs)
Fairfax Creek at Corporate Limits	9,400	1.80	450	770	960	1,600
Fairfax Creek at Marin Road Bridge (Site)	4,155	2.64	738	1,198	1,416	1,949
Fairfax Creek just upstream from Bothin Creek mouth	3,000	2.81	798	1,287	1,511	2,022
Fairfax Creek at inlet Sherman Avenue Culvert	480	3.57	1,038	1,661	1,945	2,594

Previously, FEMA (1977) had estimated the 100-year peak flow was about 1,720 cfs at the Sherman Avenue culvert inlet. FEMA (2014) estimated the 100-year peak flow there is about 1,945 cfs. Both FEMA (1977) and FEMA (2014) use as technical basis the regression equations of U.S.G.S (1971), but FEMA (2014) made adjustments or different adjustments for urbanization effects according to the same manual.

From apportioning 2014 estimates, the 100-year peak flow at the site is about 1,416 cfs (Table 2). From apportioning 1977 estimates, the 100-year peak flow at the site is about 1,336 cubic feet per second (cfs).

Available Hydraulic Model Calculations for Existing Conditions

The only hydraulic models covering Fairfax Creek at the Marin Road Bridge Site are those prepared by FEMA (1977) and FEMA (2014). The 2011 Capital Improvement Plan study model used as its upstream domain the Scenic Avenue Bridge vicinity about 1,100 feet downstream from the site. Both FEMA models used similar cross-section spacing and do not reflect appreciable differences in bed elevation at

the Site. However, as discussed above, the 1977 and 2014 hydraulic models used different estimated 100-year peak flood discharging for model-calculating the Base Flood Elevation (BFE) at the Site.

For the purposes of this analysis, it is presumed that the FEMA contractors applied design discharges for the reach including the site were 1,450 cfs (1977) and 1,511 cfs (2014) – the peak flow values estimated for a location immediately upstream from the Bothin Creek tributary mouth where the drainage area is about 2.81 square miles.

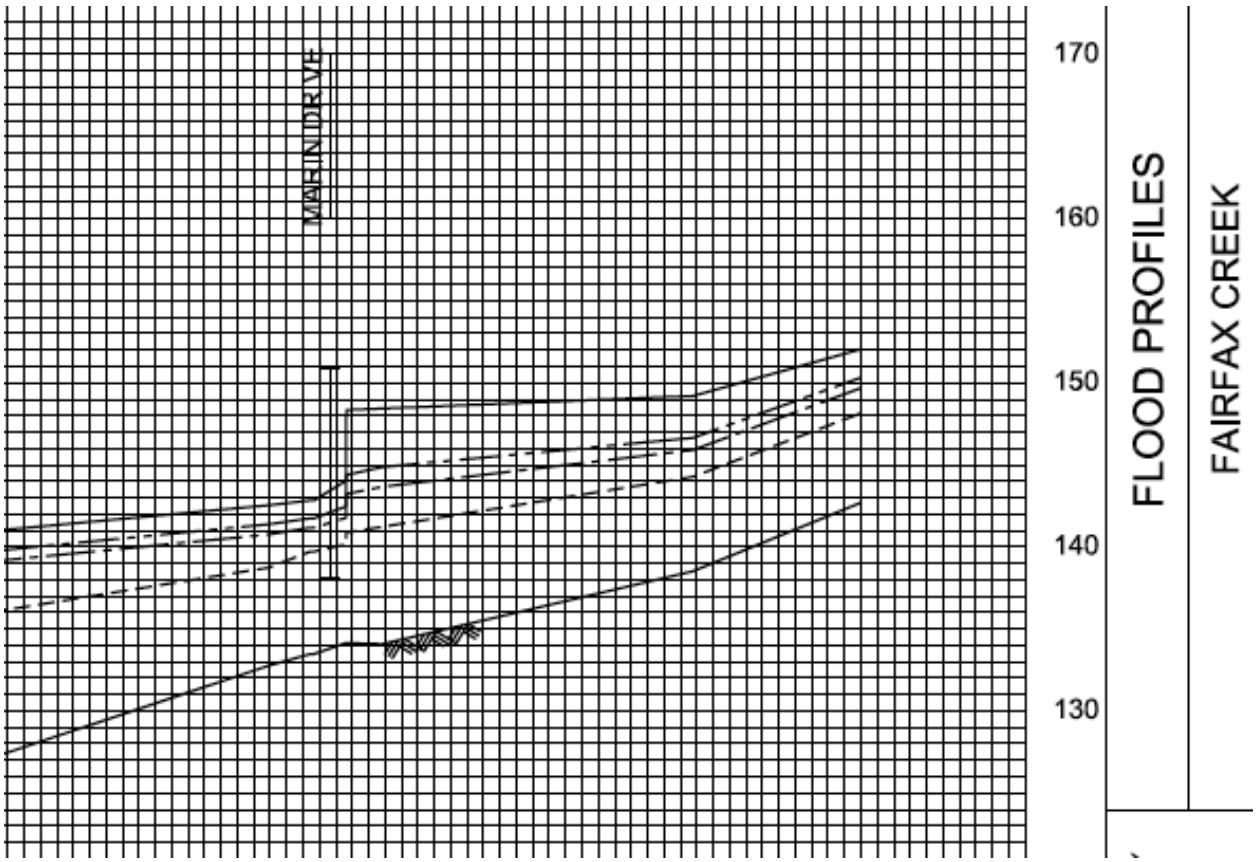

Figure 3 – Excerpt from 2014 FEMA FIS Flood Profiles (p. 121 of 123) showing calculated 0.2-, 1-, 2- and 10% annual chance flood water surface elevation profiles upstream and downstream from the Existing Conditions Marin Road Bridge (Elevations NAVD88 datum).

The 2014 hydraulic model calculates a 100-year water surface elevation (BFE) drops about 3 feet from about 145 feet NAVD88 immediately upstream from the Marin Road Bridge to about 142 feet NAVD88 immediately downstream from the Marin Road Bridge (Figure 2, Figure 3). The three-foot drop in the BFE occurring through the length of the bridge culvert indicates that the bridge opening exerts a backwater effect on the 100-year water surface elevation under existing conditions.

By comparison, the 1977 FEMA hydraulic model calculates an approximately 2-foot drop in the BFE through the length of the Marin Road Bridge culvert, from about 142.6 feet NAVD88 immediately upstream to about 140.8 feet NAVD88 immediately downstream. Comparing the 1977 and 2014 model results shows that the calculated BFE immediately upstream from the bridge culvert opening raised about 2-3 feet from about 142.6 feet NAVD88 in 1977 to about 145 feet NAVD88 in 2014. The 2-3-foot rise in BFE cannot be entirely explained by potential 60-cfs increase in design 100-year peak flow discharge. Nor can it be explained entirely by approximately 0.5-ft rise in the downstream bed elevation. Presumably then, also, the 2014 model may have used higher Manning's "n" roughness coefficient and improved high water mark calibration information gathered by Army Corps of Engineers after the 1982 flood and County of Marin after the 2005 flood. FEMA (1977) reports using Manning's "n" channel roughness values for Fairfax Creek ranging from 0.025 to 0.080. FEMA (2014) reports using Manning's "n" channel roughness values for Fairfax Creek ranging from 0.016 to 0.085.

According to existing conditions field measurements, the crown of the arch culvert at the inlet rises about 8.5 feet above the minimum bed elevation midway through the culvert length. FEMA (2014) calculated the BFE about 8.0 feet above the bed elevation at the bridge section, and FEMA (1977) also calculated the BFE about 8.0 feet above the bed. Therefore, it appears that the 100-year flood peak water surface elevation is about 0.5 feet lower than the crown of the culvert at the inlet. However, this does not imply that the culvert does not exert a backwater effect on the 100-year flood water surface. As discussed above, the culvert causes a 2-3-foot rise -- the "shoulders" of the arch culvert inlet headwall on both sides of the crown cause pressure flow through the culvert. However, the resulting backwater does not rise above the bridge deck or the top of the vertical concrete right bank retaining wall extending upstream from the bridge inlet along Manor Road. Under existing conditions, there appears to be 2.5-3.5 feet of "freeboard" available before these structures are overtopped so as to cause flooding of the roadway.

Fluvial Geomorphology Consulting (2006) measured high water marks approximately 7.0 feet above the bed in the vicinity of Marin Road Bridge site resulting form the December 31, 2005 flood. Per the above discussion, the estimated peak flood flow during the 2005 flood is between the 50- and 100-year peak flow estimated by FEMA (2014).

The overtopping flood has not been estimated by FEMA, nor has it been estimated by this analysis. According to the downstream bridge face elevation shown on Sheet 7 of the CIC December 2014 Design Plan Set, the top of the railing is 5.4 feet above the arch culvert crown. FEMA (2014) calculated the 500-year flood water surface elevation (WSE) is about 4 feet higher than the 100-year WSE about 0.5 feet below the crown. Therefore, FEMA (2014) estimated the 500-year peak water surface elevation would rise to within about 2 feet from the top of railing which would presumably cause flooding through the railing and over the right bank vertical concrete retaining wall upstream from the inlet onto the roadway. According to the FIS profiles, FEMA (2014) calculated the 500-year peak water surface elevation is about 2.5 feet less than the top of the Marin Road Bridge railing (e.g., Figure 3).

Potential Hydraulic Effects of the Project Alternative and Recommended Mitigation Measures

Compared to the No Project (Existing Conditions) Alternative, implementing the maintenance measures comprised by the Project Alternative would have a minimal, *de minimus* impact on the 100-year flood water surface elevation at and upstream from the site, a potential effect that would be entirely mitigated by also implementing the recommended mitigation measures identified below in this section of the report.

Specifically, the proposed project would place 2-ft-wide rock rip-rap toe foundations extending approximately 8 feet upstream from the inlet corner and 12 feet downstream from the outlet corner that, in plan, would be located entirely within the culvert opening edge lines extended or appropriate contraction/expansion lines extended upstream and downstream from the culvert. Although the top elevation of the rock will be at the existing ground elevation so as to not increase the actual or effective bed elevation, the toe foundations structures, as configured by the California Infrastructure Consultancy (December 2014 Plan Set, Sheets 7-9) may have a minimal or *de minimus* increasing effect on water surface elevation within and upstream from the bridge culvert by displacing mobile bed material below existing bed elevation and directly adjacent to the inlet and outlet corners with immobile rock material resisting scour during flood flows near and exceeding the 100-year flood flow. The potential amount of water surface elevation increase would not be detected by standard one-dimensional fixed-bed step-backwater hydraulic modeling, and may be less than the detection level (i.e., threshold) for more advanced (i.e., moveable bed) hydraulic models, if employed for this analysis. Furthermore, actual construction of the rock fill behind and beneath the hanging toe of the existing wingwall should require creekward encroachment of the finished face of rock material in as much as the riprap cannot be installed to form a vertical finished face. This will cause a minor reduction in the flood flow capacity near the bridge inlet section.

However, by also implementing the recommended mitigation measures listed below, the potential hydraulic effects of the proposed project would be entirely mitigated both by directly increasing the cross-sectional area of the hydraulic opening at the culvert outlet, and allowing the creek bed to scour more deeply during larger floods.

Recommended Flood Flow Capacity Protection Measures

1. As part of the removal and replacement of failed rock scour protection along the perimeter of the existing downstream left wingwall, remove existing encroached large concrete debris from the culvert barrel at the outlet corner (downstream bridge face), thereby enlarging the hydraulic opening and reducing energy losses at the transition from the arch culvert section to the sloped embankment cross-section immediately downstream;

2. Remove existing large broken concrete rubble debris from the channel bed about 15 feet upstream from the culvert inlet;

3. Remove the existing mature alder (*Alnus Rhombifolia*) rooted on the gravel bar immediately downstream from the culvert outlet (see cover photo) and the portion of the gravel bar that is reinforced by the alder tree roots; and,

4. Remove exposed bed materials larger than 90 mm diameter from the creek bed everywhere within the culvert footprint and within the low-flow channel bed extending not less than 12 feet downstream from the bridge outlet.

Overall, with or without implementing the recommended mitigation measures, implementing the proposed maintenance measures represents a very low level of risk. The proposed project condition will not cause longitudinal encroachment, significant encroachment, or support incompatible floodplain development in any way. Also implementing the mitigation measures is consistent with creek management for reduced flood damage risk, improved freeboard, and reduced debris blockage potential.

Scour Analysis and Recommended Scour Mitigation Measures

As discussed above, historical channel bed incision has reduced the Fairfax Creek bed elevation to near minimum possible elevations constrained by bedrock exposures upstream and downstream from the site. More than 0.5 feet of additional long-term bed degradation is not expected to occur at the site.

By implementing the recommended flood flow capacity mitigation measures listed above, the bed elevation is expected to reduce about 0.5-1 feet within the culvert footprint and immediately downstream during floods subsequent following project implementation.

Therefore, as much as about 1.5 vertical feet of bed elevation lowering may be expected to occur at the site. Structures founded adjacent to the existing channel bed should be designed for future conditions having up to 1.5-ft lower year-round bed elevations.

In addition, the large gravel-sized material comprising the bed materials at the site after implementing the project and recommended mitigation measures should be expected to temporarily scour 2-4 vertical feet during large floods, with greatest scour occurring where the proposed rock rip-rap toe foundation structures are proposed.

<u>Recommended Scour Protection Measures</u>

1. Foundation structures constructed as part of the BPMP measures should be founded to sufficient depths below existing grade to perform as designed under future conditions including up to 1.5 feet of permanent long-term bed elevation lowering, as well as 2-4 feet of temporary bed elevation lowering by scour during floods.

Limitations of this Analysis

This analysis relies on existing best available information hydrology and hydraulic studies, primarily prepared by FEMA, for characterizing the existing conditions flood water surface elevation and scour potential at the Marin Road Bridge site. This analysis evaluates the potential effects on water surface elevation and scour potential of the proposed bridge maintenance measures according to professional judgment informed by understanding of basic hydraulic engineering principles regarding minimization of bridge inlet and outlet friction losses, rather than hydraulic model calculations for existing and proposed bridge geometry, in arriving at the conclusion that the proposed measures should have a *de minimus* effect on water surface elevations – including the base flood elevation – and scour potential, as should be entirely eliminated by incorporating recommended mitigation measures into the project. Conducting hydraulic modeling of the proposed project conditions is not recommended, in general, because the actual project effects on water surface elevation and scour potential are less than the increments likely to be detected either by standard one-dimensional fixed bed step-backwater analysis or two-dimensional hydraulic analysis of detailed existing and design conditions site topography.

References Cited

Federal Emergency Management Agency (FEMA). 1977. Flood Insurance Study, Town of Fairfax, California.

Federal Emergency Management Agency (FEMA). 2014. Flood Insurance Study, Marin County and Incorporated Areas, Volume 1 of 2, Revised: March 17, 2014; Flood Insurance Study Number 06041CV001B.

Fluvial Geomorphology Consulting et al. 2006. Geomorphic Assessment of Fairfax Creek and San Anselmo Creek within the Town of Fairfax Limits, prepared for Town of Fairfax Public Works Department (July 31, 2006).

Montgomery, D. R. and J. M. Buffington. 1993. Channel classification, prediction of channel response, and assessment of channel condition: Olympia, Rep. TFW-SH10-93-002, 84 p., Wash. State Dept. of Natural Resources, Olympia.

Stetson Engineers Inc. et al. 2000. Geomorphic Assessment of the Corte Madera Creek Watershed. Prepared for Friends of Corte Madera Creek and Marin County Department of Public Works.

Stetson Engineers Inc. et al. 2011. Capital Improvement Plan Study for Flood Reduction and Creek Management. Prepared for Marin County Flood Control and Water Conservation District.

U.S. Geological Survey. (1971). Open-File Report, Suggested Criteria for Hydrologic Design of Storm-Drainage Facilities in the San Francisco Bay Region. S. E. Rantz (author).

LOCATION HYDRAULIC STUDY FORM *

Marin Road Bridge over Fairfax Creek in Fairfax, CA

Please see also "Location Hydraulic Study Report" for more information.

Dist. 04 Co. Marin Rte. 0 P.M. 0

EA _____ Bridge No. 27C-0143

Floodplain Description:

The 1% annual chance flood is contained within the channel area of Fairfax Creek (Zone AE) in the reaches immediately upstream and downstream from Marin Road Bridge. The site occurs within a floodway designated by the March 17, 2014 FIRM revision. The FIRM implies that overland flooding resulting from the 0.2% annual chance flood and potentially shallow flooding resulting from the 1% annual chance flood originating from overflow onto Olema Road more than about 2,000 creek feet upstream from the site passes into Fairfax Creek over the right bank vertical concrete retaining wall immediately upstream (north) from the site.

1. Description of Proposal (include any physical barriers i.e. concrete barriers, soundwalls, etc. and design elements to minimize floodplain impacts)

Repair and replacement in place in same configuration existing upstream right (west) wingwall at inlet and existing downstream left (east) wingwall and associated wall foundation riprap scour protection.

2. ADT: Current 110 Projected 129

3. Hydraulic Data: Base Flood Q_{100}= 1,416 CFS

WSE_{100}= 145 ft NAVD88 The flood of record, if greater than Q_{100}:

Q=_____CFS WSE= _____

Overtopping flood Q= ND/NA CFS WSE= 151 ft NAVD88

Are NFIP maps and studies available? YES X NO_____

4. Is the highway location alternative within a regulatory floodway?

YES_____ NO X

5. Attach map with flood limits outlined showing all buildings or other improvements within the base floodplain. *(See Location Hydraulic Study Report).*

Potential Q_{100} backwater damages:

A. Residences? NO_____ YES X

B. Other Bldgs? NO X YES_____

C. Crops? NO X YES_____

D. Natural and beneficial

FLOODPLAIN VALUES? NO X YES_____

6. Type of Traffic:

A. Emergency supply or evacuation route? NO X_____YES_____
B. Emergency vehicle access? NO_____YES X
C. Practicable detour available? NO_____YES X
D. School bus or mail route? NO_____YES X

7. Estimated duration of traffic interruption for 100-year event hours:_____4_____

8. Estimated value of Q_{100} flood damages (if any) – moderate risk level.

A.	Roadway	$_____NA___
B	Property	$_____NA___
	Total	$_____NA___

9. Assessment of Level of Risk Low__X_____
Moderate_____
High_____

For High Risk projects, during design phase, additional Design Study Risk Analysis May be necessary to determine design alternative.

Signature – Dist. Hydraulic Engineer _____Date_____
(Item numbers 3,4,5,7,9)

Is there any longitudinal encroachment, significant encroachment, or any support of incompatible
Floodplain development? NO___X_____YES_____

If yes, provide evaluation and discussion of practicability of alternatives in accordance with 23 CFR 650.113

Information developed to comply with the Federal requirement for the Location Hydraulic Study shall be retained in the project files.

Signature – Dist. Project Engineer_____Date_____
(Item numbers 1,2,6,8)

- Same as Figure 804.7A Technical Information for Location Hydraulic Study located in Chapter 804 of the Highway Design Manual

SUMMARY FLOODPLAIN ENCROACHMENT REPORT

Marin Road Bridge over Fairfax Creek in Fairfax, CA (Br. No. 27C-0143)

Please see also "Location Hydraulic Study Report" for more information.

1) Is the proposed action a longitudinal encroachment of the base floodplain?

No.

2) Are the risks associated with the implementation of the proposed action significant?

No.

3) Will the proposed action support probable incompatible floodplain development?

No.

4) Are there any significant impacts on natural and beneficial floodplain values?

No.

5) Routine construction procedures are required to minimize impacts on the floodplain. Are there any special mitigation measures necessary to minimize impacts or restore and preserve natural and beneficial floodplain values?

No.

6) Does the proposed action constitute a significant floodplain encroachment as defined in 23 CFR 650.105q?

No.

7) Are Location Hydraulic Studies (same as Figure 804.7A Technical Information for Location Hydraulic Study located in chapter 804 of the Highway Design Manual) that document the above answers on file?

Yes. Both a Location Hydraulic Study Form (Attachment A) and a Location Hydraulic Study Report.

San Anselmo Creek Looking Downstream to Upstream Face of Canyon Road Bridge (December 19, 2014)

Location Hydraulic Study Report

San Anselmo Creek at Canyon Road Bridge (Br. No. 27C-0146)
Fairfax, California
January 2016

geomorph DESIGN

Prepared by:
Matt Smeltzer, P.E.
Geomorphologist/Hydrologist
CA Civil Engineer #71671

Location Hydraulic Study Report
San Anselmo Creek at Canyon Road Bridge (Br. No. 27C-0146)
Fairfax, California
January 2016

Submitted to Town of Fairfax

This Location Hydraulic Study Report was prepared by a California Registered Professional Engineer with extensive hydrology and hydraulic modeling and analysis experience in the subject watershed. The study relies on best available published hydrology and hydraulic information for the subject site in lieu of original hydraulic model analysis of the channel and bridge opening based on current channel topographic survey data. Best available hydrology and hydraulic information is deemed adequate for this analysis because the physical changes to the bridge inlet and outlet caused by the proposed bridge maintenance measures are evaluated to be sufficiently minimal such that the water surface elevation and scour effects are negligible and otherwise mitigated by design configuration of the measures and other proposed mitigation measures incorporated by the project. Limitations of this analysis are reviewed herein.

_____
Matt Smeltzer, P.E.
Registered Civil Engineer No. C71671

_____
Date

Table of Contents

Summary of Findings 4

Project Location 5

Purpose and Need 6

Project Description 7

Summary Potential Hydraulic Difference between Project and No-Project 8

Geomorphic Setting 9

Site Hydrology 9

Available Hydraulic Model Calculations for Existing Conditions 11

Potential Hydraulic Effects of Project Alternative and Recommended Mitigation Measures . . . 11

Scour Analysis and Recommended Mitigation Measures 12

Limitations of this Analysis 13

References Cited 13

Summary of Findings

Multiple bridge maintenance measures are proposed under the CalTrans Bridge Preventative Maintenance Program (BPMP) near the inlet and outlet of Canyon Road Bridge spanning San Anselmo Creek in Fairfax, California (Br. No. 27C-0146). This Location Hydraulic Study Report evaluates the potential effects that these BPMP measures may have on floodplain encroachment, flood water surface elevation, and channel bed scour, and proposes appropriate mitigation measures, if necessary. This analysis is according to the BPMP Design Plans prepared by California Infrastructure Consultancy (Sheets 4, 6, and 13) and best available hydrology and hydraulic model information. A complete project description is contained in this report at page 7.

Of the five BPMP measures outlined in the project description, two measures may have an impact on flood hydraulics and/or channel bed scour:

- Replacing the existing northwest wingwall. The existing left bank inlet failed/failing "sackrete" wingwall would be removed and replaced with a 15-foot-long vertical concrete retaining wall spanning completely between and smoothly joining with the existing vertical concrete retaining wall at its upstream end and the existing vertical concrete bridge abutment wall at is downstream end. The downstream most 9 ft segment of the wall would have a L-footing extending 3 feet toward the creek having a top elevation the same as the local minimum bed elevation. A 2' wide by 2' deep rip-rap prism would be installed creekward of the L-footing to prevent foundation scour; and,

- Repairing the existing northeast bridge wingwall. The existing left bank outlet vertical concrete wingwall would be removed and replaced with an extended wall to envelope an existing 18-inch-diameter RCP storm drain pipe downstream. The new wall would prevent ongoing backfill evacuation and bank erosion near the pipe outlet. The new vertical concrete wingwall will be doweled into the abutment wall and angled into the creek bank to provide approximately 1:1 hydraulic expansion ratio. The new wall would have an L-footing joining with the existing invert slab with the same top elevation. A 2' wide by 2' deep rip-rap prism would be buried into the creek bank flush with the exposed slope to protect the downstream edge of the footing. A new cable railing would be installed on top of the wall for fall protection.

Through design coordination with the Project Team, these BPMP measures have been designed to avoid and minimize potential effects on water surface elevation, scour depth, and downstream bank stability. This analysis concludes that these BPMP measures would have a *de minimus* impact on water surface elevation and bed scour. This analysis further concludes that implementing the proposed measures would not substantially increase the Base Flood Elevation or otherwise increase potential for backwater damages to residences, other buildings, crops, or natural beneficial floodplain values. The measures would not substantially increase the potential for overtopping of Canyon Road Bridge surface as may disrupt traffic or impact school bus or mail routes, emergency vehicle access, or emergency supply or evacuation routes.

No additional mitigation measures are necessary to avoid and minimize potential project effects on upstream water surface elevations or scour depth.

This Study concludes that the proposed BPMP measures at Canyon Road Bridge would cause no floodplain encroachment and none or negligible impact to flood water surface elevations. Therefore, a Summary Floodplain Encroachment Report has been completed for the project that refers to this Location Hydraulic Study Report.

Project Location

The Canyon Road Bridge (site) is about 1.3 miles southwest of the downtown center of Fairfax, California (Figure 1). At the site, the bridge spans San Anselmo Creek at a location about 275 feet south of Cascade Drive -- near decimal degrees latitude 37.975 N, longitude 122.607 W.

San Anselmo Creek originates in Cascade Canyon Preserve and flows through Fairfax and San Anselmo before becoming named Corte Madera Creek in Ross, California, then drains to Corte Madera Creek estuary and San Francisco Bay near Larkspur, California.

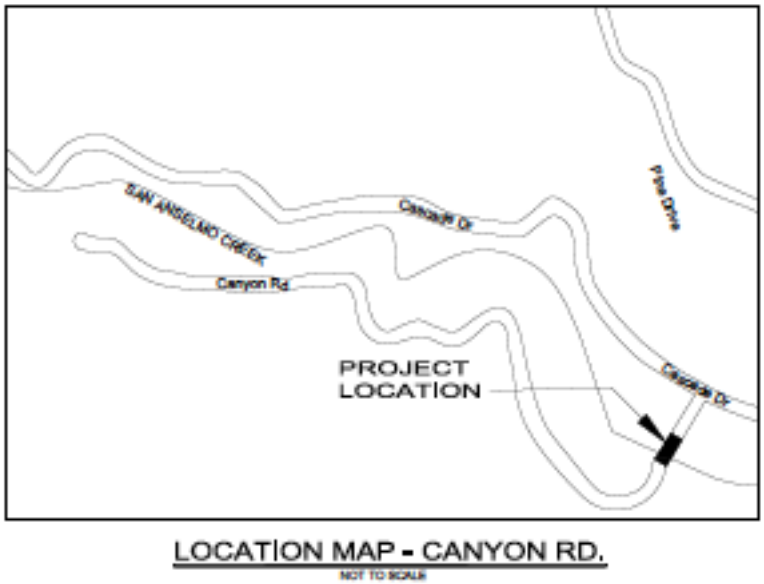

Figure 1 – Location Map Canyon Road Bridge Site.

The Canyon Road Bridge spans San Anselmo Creek about 3,280 creek feet downstream from the Fairfax corporate limits near the downstream end of the Cascade Canyon Preserve, and about 2,270 creek feet upstream from the Meadow Way Bridge. According to the March 17, 2014 updated FEMA Flood

Insurance Rate Map (FIRM Panel 451), the 0.2% and 1% annual chance floods are entirely contained within the San Anselmo Creek channel in the reaches immediately upstream and downstream from Canyon Road Bridge (Figure 2).

Purpose and Need

Left bank wingwalls at the inlet and outlet of Canyon Road Bridge are absent or in failed/failing condition requiring stabilization by removal of failed/failing wall components and installation of new vertical concrete retaining walls conforming smoothly to the existing vertical concrete abutment wall and the existing concrete slab invert bridge floor. The measures are needed for preventing ultimate complete failure of the left bank upstream from the bridge as would likely throw the existing cluster of large redwood trees at the top of bank into San Anselmo Creek to block the bridge opening, and preventing ongoing progressive bank erosion downstream from the outlet.

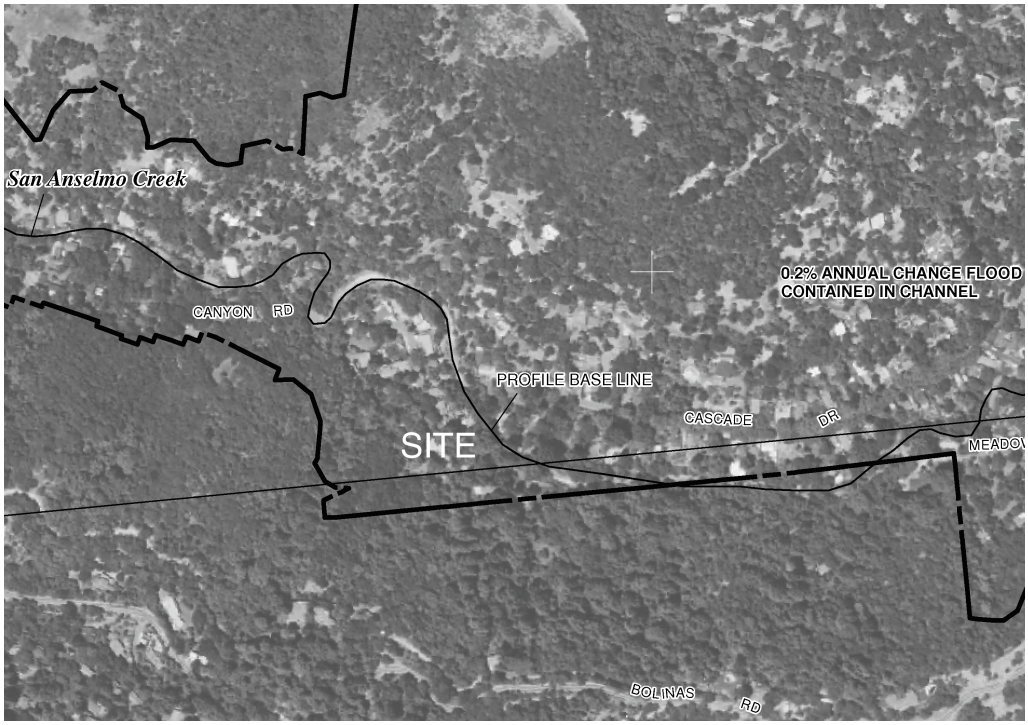

Figure 2 – Excerpt from 2014 FEMA FIRM Panel 451 showing that the 0.2% annual chance flood is contained in the San Anselmo Creek channel upstream and downstream from the site.

Project Description

Canyon Road Bridge is a single-span precast voided slab concrete superstructure constructed in 1996 on two abutments remaining from a previous bridge at this location over San Anselmo Creek. This bridge is in a strictly residential area of the town of Fairfax leading to Cascade Drive, a major thoroughfare. The structure is approximately 30 feet long and a little over 15 feet wide. It supports a single lane of traffic and railings nearly 15 feet above the creek bed and has no sidewalks on it. Two sheets of as-built plans are available for the 1996 deck replacement project, but none are available for the original abutment supports in the creek. A new General Plan (GP) based on field measurements has been developed for the bridge. The bridge has a Sufficiency Rating (SR) of 72.8 and is flagged as FO by Caltrans in the latest BIR (2014) due to its narrow width. However, the narrow width is due to the Town's decision to construct the new deck for a single lane bridge and the bridge should not be considered as FO for this reason. The bridge is not eligible for NRHP listing.

There is an elaborate concrete fish ladder that begins just upstream of the bridge and ends just downstream of it. It consists of a concrete invert on top of the creek bed covering the creek bed from abutment to abutment, and a depressed rectangular fish ladder structure in the middle having steel guides.

The Canyon Road Bridge BPMP repairs will consist of:

- Replacing the existing northwest wingwall. Currently, the wall is made up of bulging stacks of solidified concrete sacks. A cluster of old redwood trees behind the wingwall is causing the wingwall to bulge, making its collapse a real hazard. The stacked concrete sacks will be removed manually one by one and hauled away. The redwood tree cluster will be exposed thus and protected in place during the construction operations. The new vertical wingwall will be an approximately 15 feet long by seven to eight feet tall reinforced concrete wall, located a short distance in front of the redwood cluster and connected to the left edge of the existing bridge abutment. It will also be held back to the soil behind it with several soil nails going through the trunks and/or roots of the redwood trees. An arborist has determined no real harm would come to the trees from the drilling or operations. The new wingwall surface will come to the edge of the concrete fish ladder and will have a vertical expansion joint in it to allow the tree trunk to grow outwardly. Approximately a 9-foot segment of the wall will have a footing, protruding three feet away from the face of the wall, the top surface of which will be flush with the creek bed. Excavation at the edge of the creek for the wingwall and its footing will be done manually as well as with small power equipment lowered from the top. The surface of the new wingwall will be flush and in line with the existing abutment wall in order not to protrude into the waterway and impact flows or flow capacity. The space behind the wingwall, housing the redwood tree roots and base, will be backfilled with soil. A new cable railing will be installed on top of the wall for fall protection. A 2' wide by 2' deep course of rock riprap with geotextile lining will be placed in front of the foundation of the wall, flush with the creek bed, for protection of the footing from scour.

- Repair of the structural damage to the north abutment. To prevent the further deterioration of this bridge structural support, this work will consist of manually removing approximately two inches of the concrete on the surface of the north abutment wall, exposing the rebar grid behind the surface and cleaning the reinforcement. The concrete and dust from chipping and grinding the concrete surface will be captured and hauled away. Next, the reinforcement grid in the wall will be covered with a new two-inch layer of special grout and finished smoothly.

- Repairing the existing northeast bridge wingwall. The short existing northeast wingwall on the right side of the above abutment will be removed and replaced with an extended wall to envelope an existing storm drain pipe daylighting adjacent to the bridge. The pipe discharge is eroding the creek back next to the bridge. The new wingwall will be doweled into the abutment wall and angled into the creek bank, avoiding any intrusion into the current hydraulic space. The wingwall extension will be fortified with a couple of soil nails into the exiting bank. This wall will also have a short triangular footing in front, the top of which will be flush with the creek bed, joining with the existing invert slab. The downstream edge of the wall will be protected from erosion with a 2' wide by 2' deep course of rock riprap buried into the creek bank and flush with the exposed slope. A new cable railing will be installed on top of the wall for fall protection.

- Sealing the cracks in the bridge deck. This will be done with methacrylate, similar to Spruce Road Bridge. However, no polyester concrete will be used here. Since this is a one-lane bridge and it will be closed (after heavy traffic hours at night) for the sealing of its deck for a few hours, two measures to meet the needs of the residents will be implemented. First, a first-response crew and vehicle from Fairfax Fire Department will be positioned on the south end of the bridge for emergency situations. Secondly, the bridge will be opened for crossing by covering the sealing agent with plywood if an emergency crossing will be needed during the short duration of bridge closure. Prior notifications will be sent to the neighborhood.

- New signage and railings. "Narrow Bridge" signs will be installed at each approach to the bridge a short distance away. Also, the existing wooden approach railings at all four corners of the bridge will be replaced with metal beam guard railings.

An Area of Potential Effects (APE) drawing and a preliminary Bridge General Plan for the repairs have been developed for this bridge work. The work will be at both the deck and below deck levels and is expected to take as many as fifteen working days from start to finish.

Summary Potential Hydraulic Difference between Project Alternative and No-Project Alternative

Under the Project Alternative, the absent or failed/failing left bank vertical inlet and outlet wingwalls would be removed and/or replaced with new vertical concrete wingwalls with horizontal L-footings that would be carefully configured to avoid encroaching creekward of the existing retaining wall and creek

bed surfaces. Riprap prisms required for wall/foundation scour protection would be installed entirely below the existing creek bed elevation. Therefore, the Project Alternative would have none, negligible, or *de minimus* hydraulic impact on flood water surface elevations and reduce creek bed scour to an extent not affecting hydraulic flood capacity. Rather, the BPMP measures would increase the smoothness of the left bank wingwalls and the left bank bridge abutment wall, providing negligible or *de minimus* increase in flood flow capacity and reduction in flood water surface elevation.

Geomorphic Setting

The site occurs within a relatively natural unchannelized reach of San Anselmo Creek where the drainage area is about 3.5 square miles. The bed elevation drops about ten vertical feet at the Canyon Road Bridge Crossing. The floor of the bridge opening has been reinforced with a concrete slab and the headcut on the downstream side of the bridge has been protected with a sloping concrete apron and large rip-rap at the toe. A denil-type fish ladder runs up the center of the concrete apron covering the steep headcut slope.

The channel bed is sloped about 0.6-0.8% both upstream and downstream from the reinforced headcut at the bridge site. Upstream from the site the bed is gravel dominated and the channel type is expressly pool-riffle (e.g., Montgomery and Buffington 1993) with wide, low point bars and relatively wide, unconfined meandering processes primarily intact. Downstream from the site, San Anselmo Creek cuts down to the south into the very steep south canyon wall, its surface showing evidence of frequent hillslope failures in the exposed Franciscan mélange. As such, the channel is without organized bedforms, is essentially plane-bedded and dominated by lag deposits of large boulders from mélange derived colluvium.

San Anselmo Creek became deeply incised beginning at the end of the 1800s and throughout the early 1900s (Stetson Engineers Inc. 2000). By the time of FEMA's 1976 cross-section surveys for hydraulic model development (FEMA 1977) the bed elevations had reached practical minimum reinforced by multiple bedrock outcrops on the bed and low banks. Bed elevations at the bridge sections were reinforced to prevent headcut advance at the road crossing. As such, there is no bed elevation fluctuation at the bridge. Bed elevation fluctuation upstream is minimized by the grade control at the bridge. Both the 1977 and 2014 FEMA Flood Insurance Studies show the bed elevation at the Canyon Road Bridge crossing to be 162 feet NAVD88 and 161 feet NAVD88 40 feet upstream from the bridge section (Table 1).

Site Hydrology

FEMA (2014) used regional regression equations to estimate various return interval peak flood discharges at locations upstream and downstream from the Canyon Road Bridge site, from which estimates can be drawn for the site via drainage area apportioning (Table 2).

Previously, FEMA (1977) had estimated the same values shown in Table 2 as FEMA (2014). Both FEMA (1977) and FEMA (2014) use as technical basis the regression equations of U.S.G.S (1971). And although FEMA (2014) made adjustments to 1977 values on Fairfax Creek to account for urbanization effects according to the same manual, no such urbanization related adjustments were made for the San Anselmo Creek locations shown in Table 2.

From apportioning 2014 estimates, the 100-year peak flow at the site is about 1,550 cfs (Table 2).

Table 1.
Comparison of 1976 and 2014 Minimum Bed Elevation Survey Data At and Upstream from Canyon Road Bridge.

Survey Year	Minimum Bed Elevation (feet NAVD88) at Bridge Section	Minimum Bed Elevation (feet NAVD88) 40 feet upstream from Bridge Section	Source
1976	162	161	FEMA (1977)
ca. 2010	162	161	FEMA (2014)

Table 2.
Estimated peak flood flows at Canyon Road Bridge (Site) determined by drainage area apportioning from FEMA (2014) published estimates at upstream and downstream San Anselmo Creek locations.

Location	Distance upstream from mouth (ft)	Drainage Area (sq mi)	FEMA (2014) 10-Year Peak (cfs)	FEMA (2014) 50-Year Peak (cfs)	FEMA (2014) 100-Year Peak (cfs)	FEMA (2014) 500-Year Peak (cfs)
San Anselmo Creek at Corporate Limits	44,280	3.10	725	1,300	1,480	2,100
San Anselmo Creek at Canyon Road Bridge (Site)	41,000	3.46	770	1,370	1,550	2,250
San Anselmo Creek at Meadow Way Bridge	38,800	3.70	800	1,420	1,590	2,350

Available Hydraulic Model Calculations for Existing Conditions

The only hydraulic models covering San Anselmo Creek at the Canyon Road Bridge Site are those prepared by FEMA (1977) and FEMA (2014). The County of Marin's 2011 Capital Improvement Plan study model of San Anselmo Creek did not extend upstream from the Fairfax Creek tributary mouth. Both FEMA models used similar cross-section spacing – and may have in fact used the same cross-section input data – and the same design discharges, and should be expected to calculate the same 100-year water surface elevations (WSEs) at the site.

The 2014 hydraulic model calculates a 100-year water surface elevation is 167.5 feet NAVD88 approaching the bridge opening and flows at critical depth (about 3.5 feet deep) through the bridge section -- supercritical flow occurs through the 10-foot dropping headcut on the downstream side of the bridge (Figure 3). FEMA's 1977 Flood Insurance Study shows the same bed and water surface elevation profiles.

The 167.5-foot 100-year WSE is about 5.5 feet higher than the 162-foot-elevation concrete slab bridge floor. The Canyon Road Bridge opening is about 10.5 ft high. Therefore the 100-year flood water surface elevation is about 4.5 feet lower than the low chord of the bridge opening. Under existing conditions, the Canyon Road Bridge has sufficient flow capacity to pass the 100-year flood with considerable freeboard.

The overtopping flood has not been estimated by FEMA, nor has it been estimated by this analysis.. According to the FIS profiles, FEMA (2014) calculated the 500-year peak water surface elevation is about 3.5 feet less than the low chord of the Canyon Road Bridge deck (e.g., Figure 3).

Potential Hydraulic Effects of the Project Alternative and Recommended Mitigation Measures

Compared to the No Project (Existing Conditions) Alternative, implementing the maintenance measures comprised by the Project Alternative would have a minimal, *de minimus, beneficial* impact on the 100-year flood water surface elevation at and upstream from the site.

Therefore, no mitigation measures are recommended.

Specifically, the proposed repair to the left bank wingwall at the bridge inlet will increase flood flow capacity of the bridge both by increasing the effective width of the bridge opening by about 1 foot, and by creating overall smoother transition between the upstream curved vertical concrete retaining wall and the vertical concrete abutment wall.

The proposed repair to the left bank immediately downstream from the bridge outlet will further increase the flood flow capacity of the bridge by providing a smoother hydraulic transition in the

expansion zone downstream from the bridge opening. As will replacing the surface of the existing left bank abutment wall.

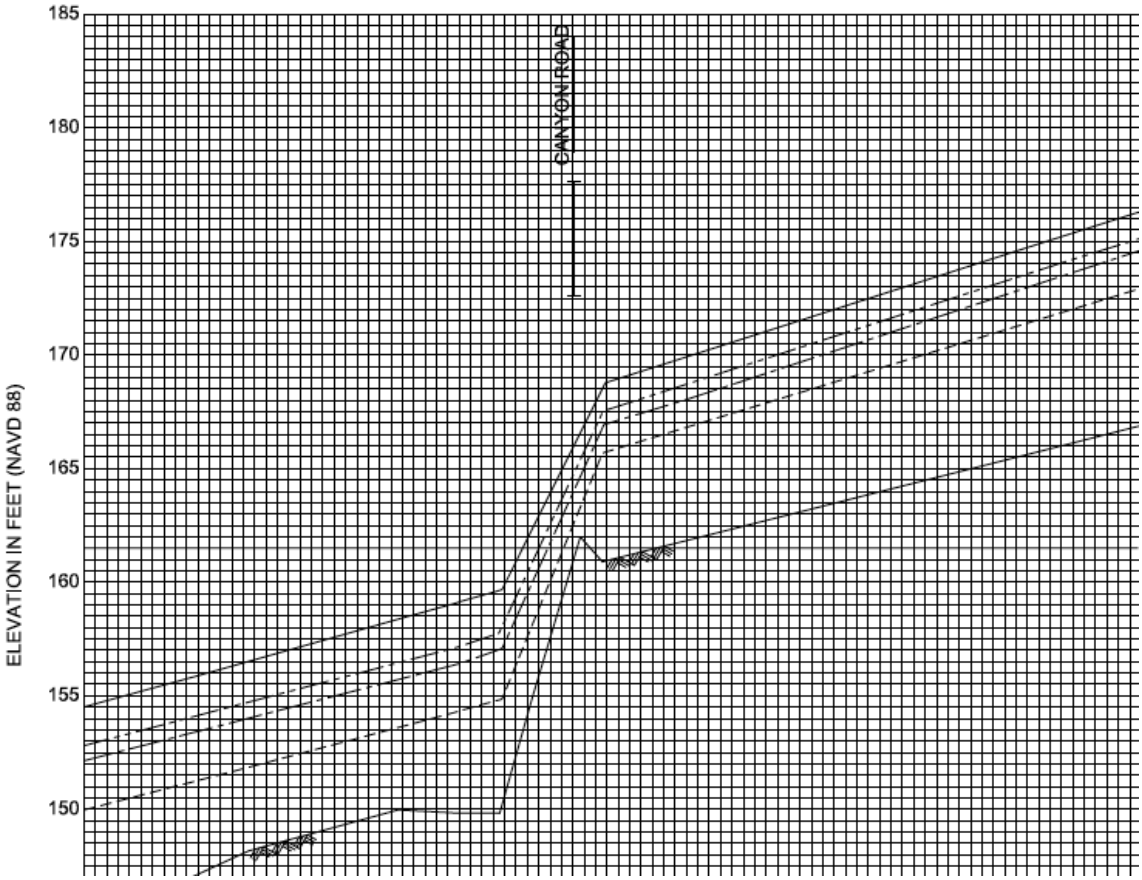

Figure 3 – Excerpt from 2014 FEMA FIS Flood Profiles at p. 81P(c) showing calculated 0.2-, 1-, 2- and 10% annual chance flood water surface elevation profiles upstream and downstream from the Existing Conditions Canyon Road Bridge (Elevations NAVD88 datum)

Scour Analysis and Recommended Mitigation Measures

As discussed above, future channel bed incision is prevented at the site by the concrete floor placed within the bridge structure for preventing the advancement of a historically active 10-foot headcut immediately downstream from the bridge. Therefore, long-term permanent bed elevation decline is estimated to be zero.

Temporary scour during large floods is maximum at the toe of the proposed new LOL type 6A retaining wall footing extension immediately upstream from the bridge inlet and the concrete slab. A permanent scour pool occurs at the junction of the slab and the existing failed/failing retaining wall. For the purposes of wall foundation design, it should be assumed that the bed elevation at the toe of the slab/wall corner reduces 3 feet lower than the existing bed elevation there during the short duration of large floods occurring at the site.

Limitations of this Analysis

This analysis relies on existing best available information hydrology and hydraulic studies, primarily prepared by FEMA, for characterizing the existing conditions flood water surface elevation and scour potential at the Canyon Road Bridge site. This analysis evaluates the potential effects on water surface elevation and scour potential of the proposed bridge maintenance measures according to professional judgment informed by understanding of basic hydraulic engineering principles regarding minimization of bridge inlet and outlet friction losses, rather than hydraulic model calculations for existing and proposed bridge geometry, in arriving at the conclusion that the proposed measures should have a *de minimus* effect on water surface elevations – including the base flood elevation – and scour potential. Conducting hydraulic modeling of the proposed project conditions is not recommended, in general, because the actual project effects on water surface elevation and scour potential are less than the increments likely to be detected either by standard one-dimensional fixed bed step-backwater analysis or two-dimensional hydraulic analysis of detailed existing and design conditions site topography.

References Cited

Federal Emergency Management Agency (FEMA). 1977. Flood Insurance Study, Town of Fairfax, California.

Federal Emergency Management Agency (FEMA). 2014. Flood Insurance Study, Marin County and Incorporated Areas, Volume 1 of 2, Revised: March 17, 2014; Flood Insurance Study Number 06041CV001B.

Fluvial Geomorphology Consulting et al. 2006. Geomorphic Assessment of Fairfax Creek and San Anselmo Creek within the Town of Fairfax Limits, prepared for Town of Fairfax Public Works Department (July 31, 2006).

Montgomery, D. R. and J. M. Buffington. 1993. Channel classification, prediction of channel response, and assessment of channel condition: Olympia, Rep. TFW-SH10-93-002, 84 p., Wash. State Dept. of Natural Resources, Olympia.

Stetson Engineers Inc. et al. 2000. Geomorphic Assessment of the Corte Madera Creek Watershed. Prepared for Friends of Corte Madera Creek and Marin County Department of Public Works.

Stetson Engineers Inc. et al. 2011. Capital Improvement Plan Study for Flood Reduction and Creek Management. Prepared for Marin County Flood Control and Water Conservation District.

U.S. Geological Survey. (1971). Open-File Report, Suggested Criteria for Hydrologic Design of Storm-Drainage Facilities in the San Francisco Bay Region. S. E. Rantz (author).

LOCATION HYDRAULIC STUDY FORM *

Canyon Road Bridge over San Anselmo Creek in Fairfax, CA

Please see also "Location Hydraulic Study Report" for more information.

Dist. 04 Co. Marin Rte. 0 P.M. 0

EA _____ Bridge No. 27C-0146

Floodplain Description:

The 100-year flood is entirely contained in the channel at and near the Canyon Road Bridge site.

1. Description of Proposal (include any physical barriers i.e. concrete barriers, soundwalls, etc. and design elements to minimize floodplain impacts)

Repair and replacement of left bank (north) inlet and outlet vertical wingwalls and abutment wall surface with minor rip-rap foundation scour protection

2. ADT: Current 100 Projected 350

3. Hydraulic Data: Base Flood Q_{100} 1,550 CFS

$WSE_{100=}$ 167.5 ft NAVD88 The flood of record, if greater than $Q_{100:}$

Q= ND CFS WSE= 172.5 ft NAVD88 (December 31, 2005)

Overtopping flood Q= ND and NA CFS WSE= 177.5 ft NAVD88

Are NFIP maps and studies available? YES X NO_____

4. Is the highway location alternative within a regulatory floodway?

YES_____ NO X

5. Attach map with flood limits outlined showing all buildings or other improvements within the base floodplain. *(See Location Hydraulic Study Report).*

Potential Q_{100} backwater damages:

A. Residences? NO X YES_____

B. Other Bldgs? NO X YES_____

C. Crops? NO X YES_____

D. Natural and beneficial Floodplain values? NO X YES_____

6. Type of Traffic:

A. Emergency supply or evacuation route? NO _____ YES X

B. Emergency vehicle access? NO_____ YES X

C. Practicable detour available? NO X YES_____

D. School bus or mail route? NO_____ YES X

7. Estimated duration of traffic interruption for 100-year event hours:____4_____

8. Estimated value of Q_{100} flood damages (if any) – moderate risk level.

A.	Roadway	$_____NA__
B	Property	$_____NA__
	Total	$_____NA__

9. Assessment of Level of Risk Low__X_____
Moderate____
High_____

For High Risk projects, during design phase, additional Design Study Risk Analysis May be necessary to determine design alternative.

Signature – Dist. Hydraulic Engineer _____Date_____
(Item numbers 3,4,5,7,9)

Is there any longitudinal encroachment, significant encroachment, or any support of incompatible
Floodplain development? NO___X_____YES_____

If yes, provide evaluation and discussion of practicability of alternatives in accordance with 23 CFR 650.113

Information developed to comply with the Federal requirement for the Location Hydraulic Study shall be retained in the project files.

Signature – Dist. Project Engineer_____Date_____
(Item numbers 1,2,6,8)

* Same as Figure 804.7A Technical Information for Location Hydraulic Study located in Chapter 804 of the Highway Design Manual

SUMMARY FLOODPLAIN ENCROACHMENT REPORT

Canyon Road Bridge over San Anselmo Creek in Fairfax, CA (Br. No. 27C-0146)

Please see also "Location Hydraulic Study Report" for more information.

1) Is the proposed action a longitudinal encroachment of the base floodplain?

No.

2) Are the risks associated with the implementation of the proposed action significant?

No.

3) Will the proposed action support probable incompatible floodplain development?

No.

4) Are there any significant impacts on natural and beneficial floodplain values?

No.

5) Routine construction procedures are required to minimize impacts on the floodplain. Are there any special mitigation measures necessary to minimize impacts or restore and preserve natural and beneficial floodplain values?

No.

6) Does the proposed action constitute a significant floodplain encroachment as defined in 23 CFR 650.105q?

No.

7) Are Location Hydraulic Studies (same as Figure 804.7A Technical Information for Location Hydraulic Study located in chapter 804 of the Highway Design Manual) that document the above answers on file?

Yes. Both a Location Hydraulic Study Form (Attachment A) and a Location Hydraulic Study Report.