201 N. Calle Cesar Chavez, Suite 300
Santa Barbara, CA 93103
Ph 805.692.6921

TO	Jayson Imai, City Engineer City of San Leandro Public Works	**From**	MNS Engineers Debra Leight, Env. Practice Lead Renee Gleason, Senior Env. Planner
DATE	August 15, 2025		
Subject	Cary-Haas Pedestrian Bridge Replacement Project Categorical Exemption (CatEx) Technical Memorandum		

INTRODUCTION

MNS Engineers, Inc. is pleased to submit this memorandum in consideration of a Class 1 Categorical Exemption for the proposed Cary-Haas Pedestrian Bridge Replacement Project (project), located in the City of San Leandro in Alameda County, in the East Bay region of the San Francisco Bay Area, California; refer to the Project Maps and Project Plans, provided as Attachment 1 of this memorandum. The approximately one-acre project site is located over San Leandro Creek, connecting Cary Avenue and Haas Avenue, between Bancroft Avenue and San Jose Street. The project site is split between two small parcels (APN 77-470-1-2 and APN 76-388-999-99); the majority of the proposed development would be on APN 76-388-999-99. Land uses in the vicinity of the project site primarily include residential uses in all directions and Bancroft Middle School (APN 77-470-1-3) to the south.

CATEGORICAL EXEMPTION OVERVIEW

Section 21084 of the California Public Resources Code specifically requires the CEQA Guidelines to include a list of classes (or categories) of projects that have been determined not to have a significant effect on the environment and are therefore exempt from the provisions of CEQA. The State CEQA Guidelines Cal. Code Regs. tit. 14 Sections 15301 through 15333 constitute the list of categorically exempt projects and contain specific criteria that must be met in order for a project to be found categorically exempt. Additionally, Section 15300.2 of the State CEQA Guidelines includes a list of exceptions to the use of categorical exemptions, none of which may apply to a project for it to qualify for a categorical exemption.

PROJECT DESCRIPTION

The project involves the minor alteration of an existing public structure (pedestrian trail) involving negligible or no expansion of existing or former use; specifically, the project consists of the replacement of a pedestrian bridge over the San Leandro Creek. Severe damage from fallen trees occurred to the pedestrian bridge during a major storm event in March 2023. In December 2023, the City secured environmental clearance and regulatory permits to demolish and remove the damaged bridge structure. The bridge was demolished in 2024 in compliance with previous regulatory permit requirements. The beneficiaries of the project would be trail users within the local community, including students getting to and from Bancroft Middle School. The new bridge would be 117 feet, 6 inches in length and up to 9 feet in width, involving negligible expansion of the existing use, and would maintain the existing recreational trail use.

CATEGORICAL EXEMPTION STATUS

The proposed project improvements qualify for a Class 1 Exemption: Pursuant to Section 15301(c) (CEQA Guidelines). The project is categorically exempt from CEQA under the "Class 1" (14 CCR § 15301(c) exemption per

the State CEQA Guidelines because it involves the minor alteration of an existing public structure (pedestrian trail) involving negligible or no expansion of existing or former use.

> **Section 15301. Existing Facilities**
>
> Class 1 consists of the operation, repair, maintenance, permitting, leasing, licensing, or minor alteration of existing public or private structures, facilities, mechanical equipment, or topographical features, involving negligible or no expansion of existing or former use. The types of "existing facilities" itemized below are not intended to be all-inclusive of the types of projects which might fall within Class 1(l). The key consideration is whether the project involves negligible or no expansion of use. Examples include but are not limited to:
>
> > (c) Existing highways and streets, sidewalks, gutters, bicycle and pedestrian trails, and similar facilities (this includes road grading for the purpose of public safety), and other alterations such as the addition of bicycle facilities, including but not limited to bicycle parking, bicycle-share facilities and bicycle lanes, transit improvements such as bus lanes, pedestrian crossings, street trees, and other similar alterations that do not create additional automobile lanes).

As the proposed project properly qualifies for an exemption under State CEQA Guidelines Section 15301 (i.e., Class 1), the proposed project would not have a significant effect on the environment. Additionally, the following analysis shows there are no exceptions to qualifying for the CatEx, as identified in State CEQA Guidelines Section 15300.2.

STATE CEQA GUIDELINES SECTION 15300.2 - EXCEPTIONS

This section documents that none of the exceptions in State CEQA Guidelines Section 15300.2(b) through (f) would disqualify the project from being found categorically exempt.[1] As described below, use of a categorical exemption Class 1 Subsection 15301(c) to cover the project improvements would not meet any of the exception criteria. This section includes a discussion of the project in consideration of 15300.2 (b) through (f). The findings in this section were informed by field work performed on the site and a desktop review of various online databases.

(b) Cumulative Impact - All exemptions for these classes are inapplicable when the cumulative impact of successive projects of the same type in the same place, over time is significant.

All aspects of the proposed pedestrian trail improvements would occur within the existing right-of-way and would not generate offsite impacts. The improvements would be constructed and once completed, no other improvements would be necessary or occur at the project site. As a result, there would be no potential cumulative impacts because there would be no successive projects at this location.

(c) Significant Effect - A categorical exemption shall not be used for an activity where there is a reasonable possibility that the activity will have a significant effect on the environment due to unusual circumstances.

All aspects of the proposed project improvements would occur within the existing right-of-way, which is in an area that has been previously disturbed by construction of the original pedestrian bridge structure, as well as adjacent existing residential development in all directions. The superstructure will be replaced at the same location with a prefabricated weathering-steel truss pedestrian bridge with concrete bridge deck, steel hand-railing, and vertical pickets. Constructing new abutments at the top of banks is part of the replacement bridge design.

[1] Section 15300.2 (a) relates specifically to location if invoking Categorical Exemption Classes 3, 4, 5, 6, and 11, which are not relevant to the project.

The project also includes formalization of standard width concrete sidewalks as ingress and egress at both ends of the bridge including Americans With Disabilities Act (ADA) improvements to the existing sidewalk at Haas Avenue. The re-establishment of street lighting at the Cary Drive approach to the bridge is included, as well as determining the feasibility of additional lighting at the Haas Avenue bridge approach. No additional utilities are anticipated on or near the bridge.

Biological and Hydrology Resources

- A Biological Resources Evaluation (BRE) was prepared for the project dated July 29, 2025, which is provided as Attachment 2 of this memorandum. According to the BRE, the project site is located in an area dominated by urban, residential development. It includes a section of the highly constrained San Leandro Creek, which is bordered on both sides by dense urban development. Vegetation throughout the site is heavily disturbed and primarily composed of invasive species. San Leandro Creek originates in the Oakland and San Leandro Hills and flows west through the cities of San Leandro and Oakland before ultimately discharging into San Francisco Bay. The west slope of the creek is dominated by invasive plant species, while the east bank is currently undergoing restoration and has been planted with riparian tree saplings. The BRE concluded that the project will have no impact on special-status plants. However, the proposed project may impact special-status wildlife species (described further in the BRE), including nesting birds and raptors and hoary bat. These species are known to occur or have potential to occur within or immediately adjacent to the project area. If these species are present in the project area, project development could result in direct loss of individuals or harassment which is considered “take”. Therefore, implementation of avoidance/minimization measures is recommended to reduce potential impacts to these species. Specifically, to avoid impacts to nesting birds during the nesting season (January 15 through September 15), all construction activities should be conducted between September 16 and January 14, which is outside of the bird nesting season. In addition, approximately 14 days prior to construction activities, a qualified biologist should conduct a habitat assessment for bats and potential roosting sites in trees within 50 feet of the development footprint, and within and surrounding any structures that may be disturbed by the project. Refer to the BRE for the detailed avoidance/minimization measures.

  No vegetation communities qualifying as special-status, sensitive, or otherwise rare were identified on the project site, and additional mitigation for loss of special-status vegetation communities is not expected to be required. Additionally, the project site is not located within designated Critical Habitat for any federally listed species.

- A Wetland Delineation was prepared for the project dated July 31, 2025, which is provided as Attachment 3 of this memorandum. This study was conducted to determine what on-site wetland/waterway features would potentially fall under the federal jurisdiction of the U.S. Army Corps of Engineers (USACE), state jurisdiction of the Regional Water Quality Control Board (RWQCB), and California Department of Fish and Wildlife (CDFW). The Wetland Delineation concluded that a total of 0.08 acres of the project site were determined to be potentially jurisdictional Waters of the United States. However, the proposed bridge would clear span San Leandro Creek and impacts to federally jurisdictional features are not anticipated. Approximately 288 square feet would be impacted below the top of bank; specifically, impacts to aquatic features are limited to small areas below the top of bank on both sides of the pedestrian bridge. Because no impacts to Waters of the United States are anticipated, the project will likely require a Waste Discharge Requirement (WDR) from the Regional Water Quality Control Board pursuant to the Porter-Cologne Water Quality Control Act.

  The USACE has sole authority to determine the federal jurisdictional status of waters or wetlands on any given project site, and the Wetland Delineation has been submitted to the agency for a jurisdictional determination. Coordination with the USACE is currently ongoing.

- A Location Hydraulic Study Technical Memorandum for the Replacement of the Cary Drive-Haas Avenue Pedestrian Bridge over San Leandro Creek was prepared for the project in 2025, which is provided as Attachment 4 of this memorandum. As stated previously, the City of San Leandro experienced a major storm event in March 2023, resulting in fallen trees along San Leandro Creek. Severe damage occurred to the 110-foot long, 7-foot wide single-span pedestrian bridge that connects Cary Drive and Haas Avenue. The bridge was demolished in 2024. The project site is located adjacent to San Leandro Creek between Cary Drive and Haas Avenue. The channel is well defined with steep and heavily vegetated banks on both sides. This section of the creek is designated by FEMA as a Special Flood Hazard Area (SFHA) with coinciding 1% annual chance (100-year) regulatory floodway and flood fringe boundaries, as evidenced on the effective NFIP Flood Insurance Rate Map (FIRM) 06001C0257G, Panel 257 of 725, dated August 3, 2009, for 'Alameda County, California, and Incorporated Areas'. The creek channel is mapped Zone AE (riverine floodplain). Lands outside the creek banks are designated Zone X (out of the 1% annual chance floodplain). According to FEMA's Flood Map Service Center database, there are no current Preliminary or Pending flood map studies that include the project site.

Therefore, with implementation of the measures described above, the pedestrian bridge construction activities would not negatively impact the environment. The new pedestrian bridge would operate similar to previous bridge-in-place and existing conditions. Therefore, the project would not result in a significant effect on the environment nor involve an unusual circumstance.

(d) Scenic Highways - A categorical exemption shall not be used for a project which may result in damage to scenic resources, including but not limited to, trees, historic buildings, rock outcroppings, or similar resources, within a highway officially designated as a state scenic highway. This does not apply to improvements which are required as mitigation by an adopted negative declaration or certified EIR.

According to the California Department of Transportation (Caltrans) State Scenic Highway Map, there is one state-designated Scenic Highway adjacent to the project area.[2] Interstate 580 (I-580) is designated by Caltrans as an Officially Designated State Scenic Highway. However, I-580 is located approximately 0.5-mile east of the project site and the project site would not be visible to travelers on I-580 due to intervening topography and vegetation. Therefore, the proposed project would not result in damage to existing scenic resources. Accordingly, the exception under State CEQA Guidelines Section 15300.2(d) does not apply to the proposed project.

(e) Hazardous Waste Sites - A categorical exemption shall not be used for a project located on a site which is included on any list compiled pursuant to Section 65962.5 of the Government Code.

Based on a desktop review search conducted with the Department of Toxic Substances EnviroStor database and the State Water Resources Control Board GeoTracker database, no sites were identified that presented a potential environmental risk or were included in a list compiled pursuant to Section 65962.5 of the Government Code.[3], [4] Prior to construction, a health and safety plan will be prepared for construction activities to ensure worker safety and compliance with existing State and federal laws regarding exposure to hazardous materials. Therefore, potential impacts from hazardous materials are less than significant.

(f) Historical Resources - A categorical exemption shall not be used for a project which may cause a substantial adverse change in the significance of a historical resource.

---

[2] California Department of Transportation, California State Scenic Highways | Caltrans Accessed July 14, 2025.
[3] Department of Toxic Substances Control EnviroStor online database, EnviroStor Accessed July 14, 2025.
[4] State Water Resources Control Board GeoTracker online database, GeoTracker Accessed July 14, 2025.

As-built plans for the original bridge were signed in 1972 and the original bridge on the project site was built sometime in 1972 or later. As discussed previously, severe damage occurred to the original pedestrian bridge during a major storm event in March 2023 and, due to the safety hazard, the bridge was demolished in 2024. As such, there are no historical resources in the project area and the project would not cause a substantial adverse change in the significance of a historical resource.

CONCLUSION

The project has been reviewed in compliance with CEQA. Pursuant to State CEQA Guidelines Section 15300.2, the project is categorically exempt from CEQA as Class 1 Existing Facilities. No mitigation measures are required for the project.

We appreciate the opportunity to provide you with this CatEx Technical Memorandum; please do not hesitate to contact us should you have any questions or require additional information.

Attachments

1. Attachment 1: Project Maps and Project Plans
2. Attachment 2: Biological Resources Evaluation, July 29, 2025
3. Attachment 3: Wetland Delineation, July 31, 2025
4. Attachment 4: Location Hydraulic Study Technical Memorandum for the Replacement of the Cary Drive-Haas Avenue Pedestrian Bridge over San Leandro Creek, 2025

Attachment 1: Project Maps and Project Plans

CITY OF SAN LEANDRO

PROJECT PLANS FOR CONSTRUCTION OF
CARY-HAAS PEDESTRIAN BRIDGE
PROJECT NO. 240498.00

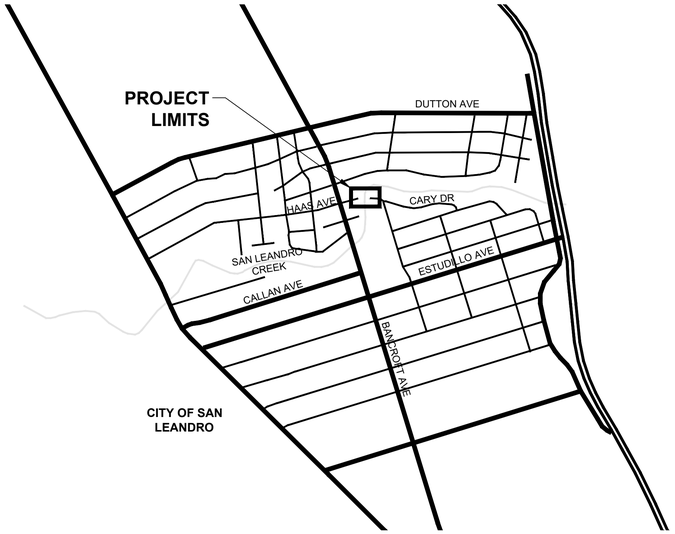

VICINITY MAP
SCALE: 1"=1000'

SHEET INDEX		
SHEET NO.	**SHEET ID**	**DESCRIPTION**
1	G-1	TITLE SHEET
2	L-1	LAYOUT PLAN
3	L-2	RIGHT-OF-WAY AND PROPERTY LINE MAP
4	BR-01	GENERAL PLAN
5	BR-02	INDEX TO PLANS
6	BR-03	FOUNDATION PLAN
7	BR-04	ABUTMENT LAYOUT
8	BR-05	ABUTMENT DETAILS
9	BR-06	MISCELLANEOUS DETAILS
10	BR-07	LOG OF TEST BORINGS

UTILITY CONTACT INFORMATION		
UTILITY	**CONTACT**	

BASIS OF BEARINGS & MEASUREMENTS

ALL DISTANCES, BEARINGS, AND COORDINATES ARE BASED ON ZONE 3 OF THE CALIFORNIA COORDINATE SYSTEM (CCS), NAD83, EPOCH 2017.50. THE HORIZONTAL ADJUSTMENT WAS PERFORMED BY UTILIZING 2 CONTINUOUSLY OPERATING REFERENCE STATIONS (CORS), P224 AND P225, TO ESTABLISH HORIZONTAL COORDINATE VALUES. THE MEASURED DISTANCES FOR THE PROJECT ARE GROUND DISTANCES. GROUND DISTANCES WERE OBTAINED BY DIVIDING THE GRID DISTANCES USING THE COMBINED FACTOR OF 0.9999309199.

BASIS OF ELEVATIONS

ELEVATIONS ARE BASED ON THE PUBLISHED BENCHMARK PROVIDED BY THE CITY OF SAN LEANDRO ON THE NGVD29 VERTICAL DATUM.
DESIGNATION HAAS-BANCROFT, ELEV. = 68.29
DESCRIPTION: CINCH NAIL TOP OF CN SOUTHEAST CORNER

APPROVED BY:

SHAWN KOWALEWSKI, P.E. — RCE 59539 — DATE
PROJECT ENGINEER

XXXXX — RCE XXXXX — DATE
PUBLIC WORKS DIRECTOR

REV	DATE	BY	DESCRIPTION

MNS
2025 Gateway Place, Suite 328
San Jose, CA 95110
805-692-6921 | www.mnsengineers.com

DESIGNED: N. BIJAK
DRAWN: N. BIJAK
CHECKED: S. KOWALEWSKI
QA/QC: K. TURNER
CONSTRUCTABILITY: N/A

NATALIA BIJAK, P.E. — DATE

REGISTERED PROFESSIONAL ENGINEER — NATALIA BIJAK — No. 97234 — Exp. 3/31/27 — CIVIL — STATE OF CALIFORNIA

0 1/2 1 2
THIS BAR IS 2 INCHES AT FULL SCALE. IF NOT 2 INCHES, THEN SCALE ACCORDINGLY.

SCALE: AS SHOWN

CITY OF SAN LEANDRO — INCORPORATED 1872

CARY-HAAS PEDESTRIAN BRIDGE
CITY OF SAN LEANDRO

TITLE SHEET
VICINITY MAP, SHEET INDEX, UTILITY CONTACT INFORMATION

PROJECT NUMBER: **CISLE.240498.00**
DRAWING NUMBER: **G-1**
SHEET NUMBER: **1** OF **10**

Fri 18 Jul 25 04:06:11 PM by: Andres Lizarre
C:\Box\Projects\CISLE San Leandro\CISLE 240498.00 Cary-Haas Pedestrian Bridge\3 Eng_CAD\3 Sheets\TITLE_XB.dwg

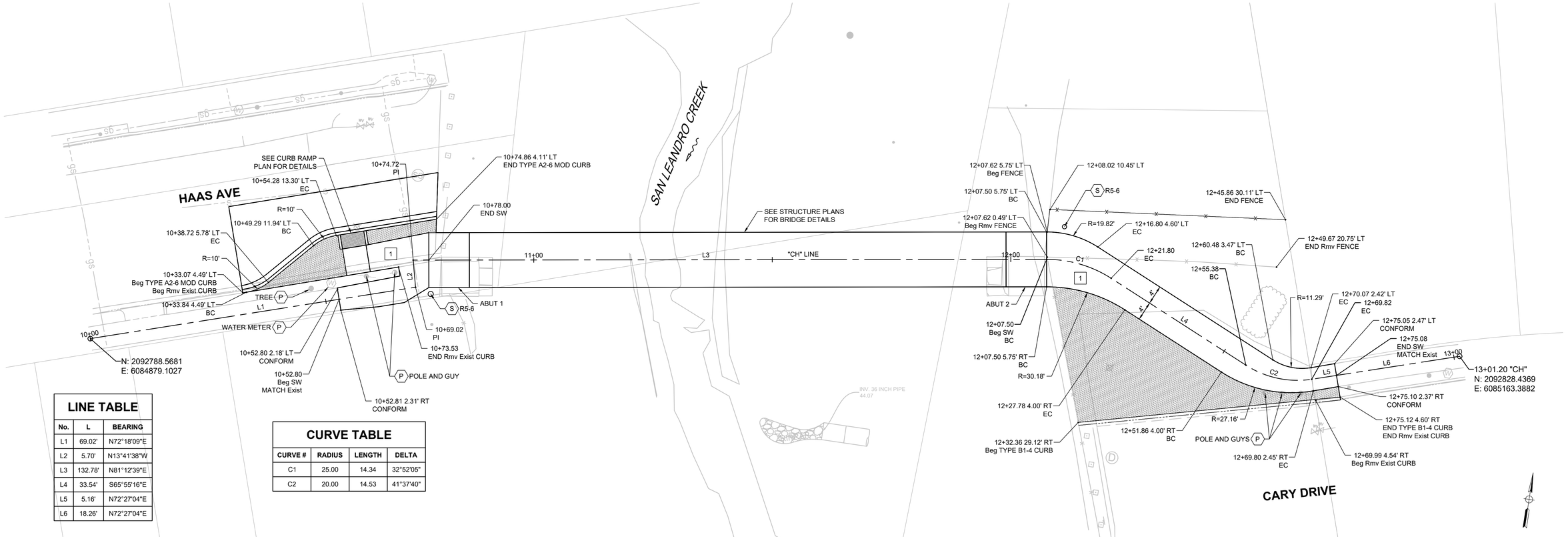

LINE TABLE

No.	L	BEARING
L1	69.02'	N72°18'09"E
L2	5.70'	N13°41'38"W
L3	132.78'	N81°12'39"E
L4	33.54'	S65°55'16"E
L5	5.16'	N72°27'04"E
L6	18.26'	N72°27'04"E

CURVE TABLE

CURVE #	RADIUS	LENGTH	DELTA
C1	25.00	14.34	32°52'05"
C2	20.00	14.53	41°37'40"

PLAN VIEW

SCALE 1" = 10'

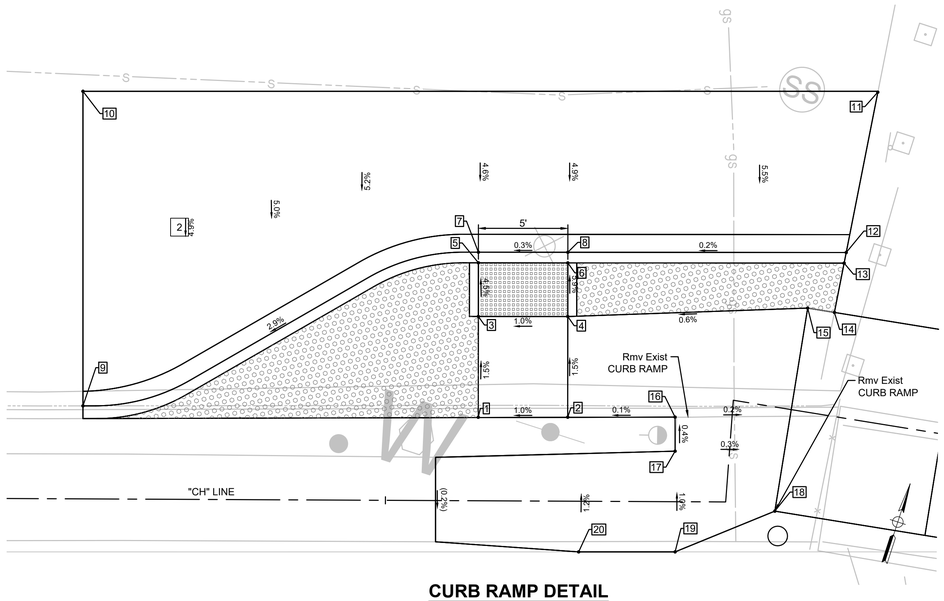

CURB RAMP DETAIL

SCALE 1" = 4'

LAYOUT DETAILS

No.	LOCATION	Elev	Desc
1	4.67' Lt "CH" 10+55.17	71.95	FS
2	4.70' Lt "CH" 10+60.17	72.00	FS
3	10.30' Lt "CH" 10+55.15	71.87	FS
4	10.32' Lt "CH" 10+60.15	71.92	FS
5	13.30' Lt "CH" 10+55.13	71.73	FS
6	12.02' Lt "CH" 10+74.72	71.75	FS
7	13.90' Lt "CH" 10+55.13	71.70	FL
8	12.41' Lt "CH" 10+74.72	71.71	FL
9	5.20' Lt "CH" 10+33.07	71.02	FL, MATCH EXIST
10	22.79' Lt "CH" 10+32.98	71.95	FS, MATCH EXIST
11	18.29' Lt "CH" 10+79.95	72.27	FS, MATCH EXIST
12	9.16' Lt "CH" 10+79.64	71.75	FL
13	8.56' Lt "CH" 10+79.62	72.25	FS
14	5.75' Lt "CH" 10+79.52	72.00	FS, MATCH ABUT
15	5.75' Lt "CH" 10+78.00	72.00	FS, MATCH ABUT
16	3.18' Lt "CH" 10+73.54	72.01	FS
17	2.83' Lt "CH" 10+66.18	72.02	FS
18	2.80' Rt "CH" 10+69.02	72.00	FS, MATCH ABUT
19	2.81' Rt "CH" 10+66.21	72.08	FS
20	2.83' Rt "CH" 10+60.82	72.12	FS

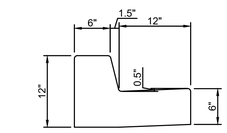

TYPE A2-6 MOD CURB DETAIL

SCALE 1" = 1'

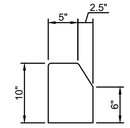

TYPE B1-4 CURB DETAIL

SCALE 1" = 1'



R5-6 SIGN

LEGEND

- (P) PROTECT
- (S) PLACE SIGN
- (XX) Pvmt SECTION; SEE NOTES
- ROCK BLANKET
- DETECTABLE WARNING SURFACE

NOTES:

1. PAVEMENT SECTION 1 IS 4" CONCRETE.
2. PAVEMENT SECTION 2 IS 4" HMA AND 8" CLASS 2 AB.

REV	DATE	BY	DESCRIPTION

MNS
2025 Gateway Place, Suite 328
San Jose, CA 95110
805-692-6921 | www.mnsengineers.com

DESIGNED:	N. BIJAK
DRAWN:	N. BIJAK
CHECKED:	S. KOWALEWSKI
QA/QC:	K. TURNER
CONSTRUCTABILITY:	N/A

NATALIA BIJAK, P.E. — DATE

REGISTERED PROFESSIONAL ENGINEER — NATALIA BIJAK — No. 97234 — Exp. 3/31/27 — CIVIL — STATE OF CALIFORNIA

0 1/2 1 2

THIS BAR IS 2 INCHES AT FULL SCALE. IF NOT 2 INCHES, THEN SCALE ACCORDINGLY.

SCALE: AS SHOWN

CITY OF SAN LEANDRO — INCORPORATED 1872

CARY-HAAS PEDESTRIAN BRIDGE
CITY OF SAN LEANDRO

LAYOUT PLAN

PROJECT NUMBER: CISLE.240498.00

DRAWING NUMBER: L-1

SHEET NUMBER: 2 OF 10

C:\Bim\Projects\CISLE San Leandro\CISLE.240498.00 Cary-Haas Pedestrian Bridge\1 Eng_CADD Sheets\1A7007.dwg
Fri 04.24.26 02:26:01 PM By: Natalia Bijak

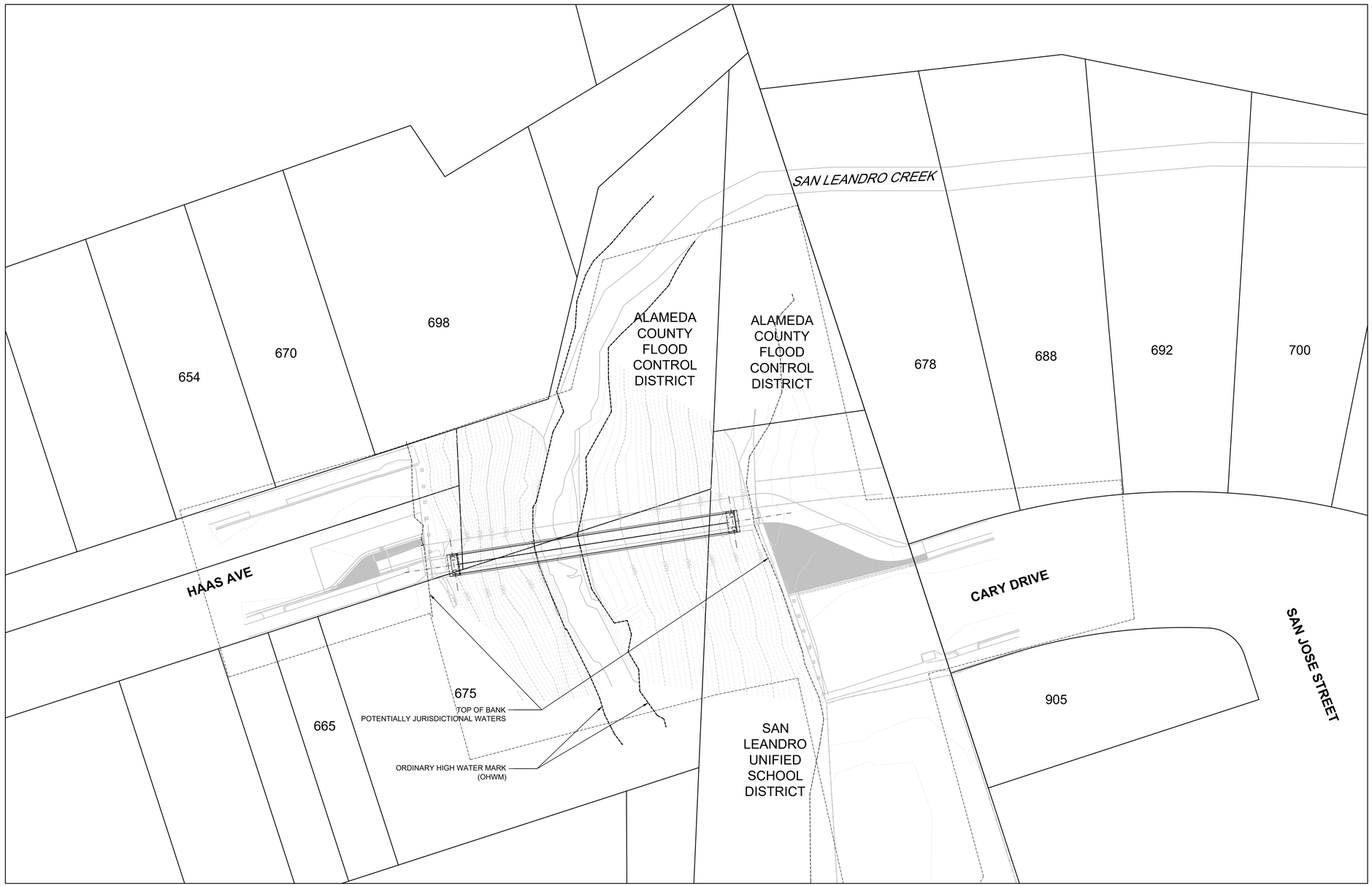

PLAN VIEW
SCALE 1" = 20'

NOTE:

THE INFORMATION PROVIDED ON THIS SHEET WAS ESTABLISHED USING RECORD DATA, WHICH IS APPROXIMATE. ADDITIONALLY, THE RIPARIAN ELEMENT MUST BE CONSIDERED AS SOME OF THE RECORD DIMENSIONS REFERENCE THE CENTERLINE OF THE CREEK.

REV	DATE	BY	DESCRIPTION

MNS
2025 Gateway Place, Suite 328
San Jose, CA 95110
805-692-6921 | www.mnsengineers.com

DESIGNED:	N. BIJAK
DRAWN:	N. BIJAK
CHECKED:	S. KOWALEWSKI
QA/QC:	K. TURNER
CONSTRUCTABILITY:	N/A

NATALIA BIJAK, P.E. DATE

REGISTERED PROFESSIONAL ENGINEER
NATALIA BIJAK
No. 97234
Exp. 3/31/27
CIVIL
STATE OF CALIFORNIA

0 1/2 1 2
THIS BAR IS 2 INCHES AT FULL SCALE. IF NOT 2 INCHES, THEN SCALE ACCORDINGLY.

SCALE: AS SHOWN

CITY OF SAN LEANDRO INCORPORATED 1872

CARY-HAAS PEDESTRIAN BRIDGE
CITY OF SAN LEANDRO

RIGHT-OF-WAY AND PROPERTY LINE MAP

PROJECT NUMBER **CISLE.240498.00**
DRAWING NUMBER **L-2**
SHEET NUMBER **3** OF **10**

Fri 18 Jul 25 04:06:19 PM by: Natalia Bijak
C:\Bim\Projects\CISLE San Leandro\CISLE.240498.00 Cary-Haas Pedestrian Bridge\Civil Eng_CAD\2 Sheets\R0W.dwg

NOTES

1. FOR "GENERAL NOTES", "QUANTITIES", AND "INDEX TO PLANS", SEE "INDEX TO PLANS" SHEET.
2. FOR "PILE DATA TABLE", "HYDROLOGIC SUMMARY TABLE", AND "BENCHMARK", SEE "FOUNDATION PLAN" SHEET.
3. FOR "CH" LINE ALIGNMENT DATA, SEE "LAYOUT PLAN" SHEET.

(1) PREFABRICATED STEEL TRUSS BRIDGE (BY OTHERS)

(2) CAST-IN-PLACE CONCRETE DECK, 6" THICK AND REINFORCED WITH #5 @ 12" EACH WAY

(3) HANDRAILING

(4) BRIDGE RAILING, 1/2" Ø VERTICAL PICKETS SPACE @ 4¼" O/C

(5) BRIDGE REMOVAL (PORTION)

LEGEND

EXISTING STRUCTURE

LIMITS OF BRIDGE REMOVAL (PORTION)

PROFILE GRADE

NO SCALE

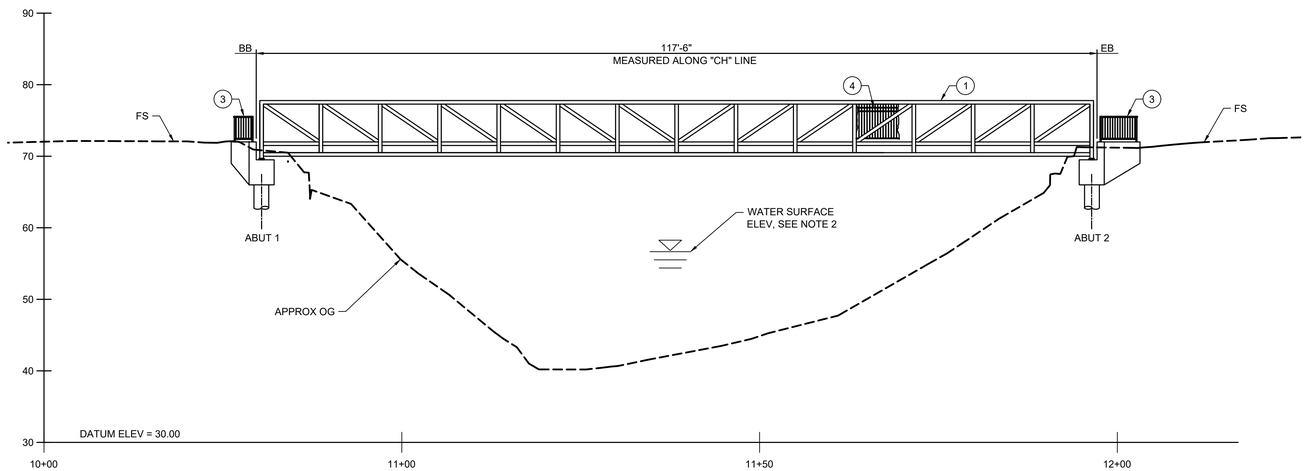

ELEVATION

SCALE: 1" = 10'

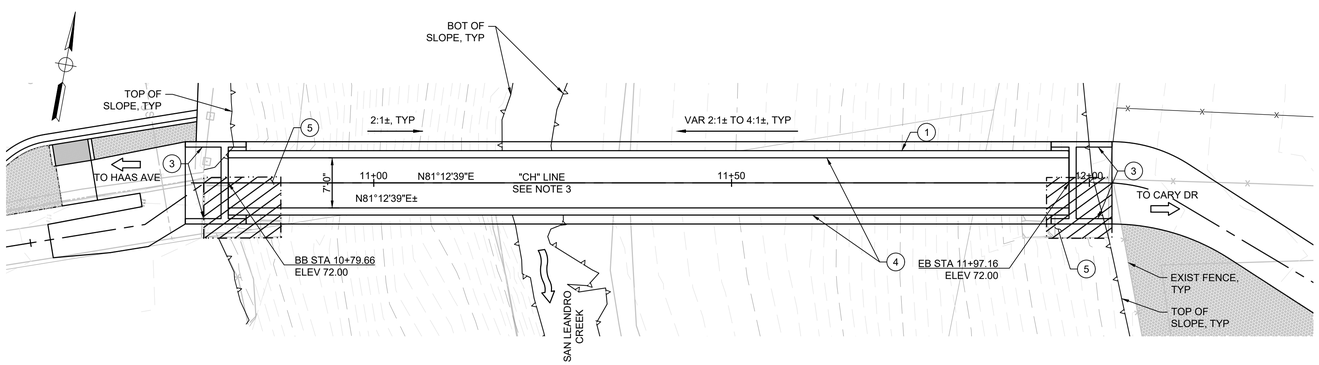

PLAN

SCALE: 1" = 10'

NOTE:
THE CONTRACTOR SHALL VERIFY ALL CONTROLLING FIELD DIMENSIONS BEFORE ORDERING OR FABRICATING ANY MATERIAL.

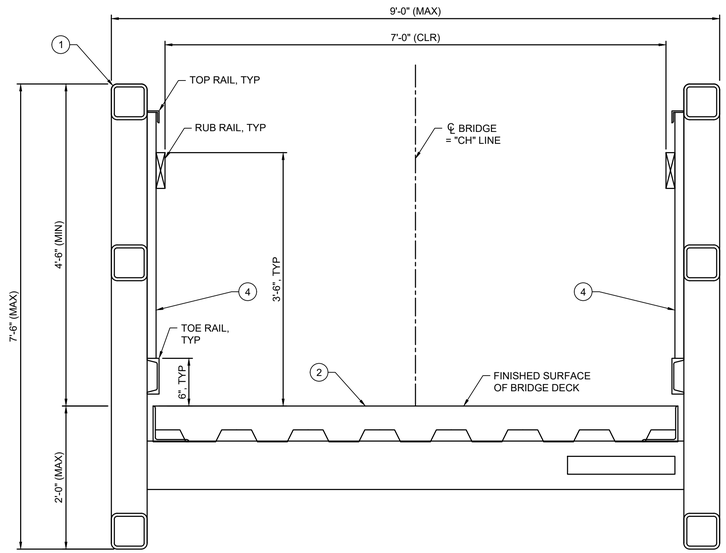

TYPICAL SECTION

SCALE: 1" = 1'

REV	DATE	BY	DESCRIPTION

MNS
2025 Gateway Place, Suite 328
San Jose, CA 95110
805-692-6921 | www.mnsengineers.com

DESIGNED:	M.EMBLEY
DRAWN:	K.DIEGO
CHECKED:	C.HARDEN
QA/QC:	K. TURNER
CONSTRUCTABILITY:	J.WILCENSKI

MICHAEL EMBLEY, P.E. — DATE

REGISTERED PROFESSIONAL ENGINEER — MICHAEL EMBLEY — No. 90710 — Exp. 12/31/25 — CIVIL — STATE OF CALIFORNIA

0 1/2 1 2

THIS BAR IS 2 INCHES AT FULL SCALE. IF NOT 2 INCHES, THEN SCALE ACCORDINGLY.

SCALE: AS SHOWN

CITY OF SAN LEANDRO — INCORPORATED 1872

CARY-HAAS PEDESTRIAN BRIDGE
CITY OF SAN LEANDRO

GENERAL PLAN

PROJECT NUMBER: CISLE.240498.00

DRAWING NUMBER: BR-01

SHEET NUMBER: 4 OF 10

Fri 18 Jul 25 04:19:11 PM By: Andrea Lozano C:\Box\Projects\CISLE San Leandro\CISLE.240498.00 Cary-Haas Pedestrian Bridge\Eng_CAD\2 Sheets\GENERAL PLAN.dwg

GENERAL NOTES
LOAD AND RESISTANCE FACTOR DESIGN

DESIGN:
AASHTO LRFD BRIDGE DESIGN SPECIFICATIONS, 8TH EDITION AND THE CALIFORNIA AMENDMENTS, PREFACE DATED APRIL 2019

AASHTO LRFD GUIDE SPECIFICATIONS FOR THE DESIGN OF PEDESTRIAN BRIDGES WITH INTERIMS, 2ND EDITION, DATED DECEMBER 2009

CALTRANS SEISMIC DESIGN CRITERIA (SDC), VERSION 2.1, JANUARY 2025

DEAD LOAD:
DESIGN WEIGHT: 94,000 LBS (SUPERSTRUCTURE)

LIVE LOADING:
90 PSF PEDESTRIAN LOADING

SEISMIC LOADING:
SOIL PROFILE: CLASS S2, VS30 = 984 FT/SEC
MAGNITUDE GROUP: M(MAX) = 6.86
PEAK GROUND ACCELERATION 0.94G

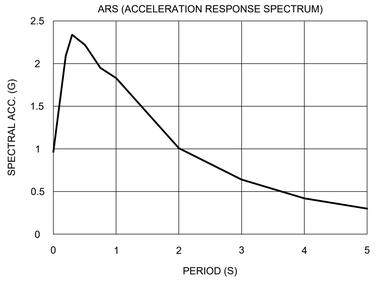

REINFORCED CONCRETE:
fy = 60 KSI
f'c = 3.6 KSI UON
n = 8

QUANTITIES

PREFABRICATED PEDESTRIAN BRIDGE	1 LUMP SUM
PREFABRICATED PEDESTRIAN BRIDGE ERECTION	1 LUMP SUM
STRUCTURE EXCAVATION (BRIDGE)	XX CY
STRUCTURE BACKFILL (BRIDGE)	XX CY
24" CAST-IN-DRILLED-HOLE CONCRETE PILING	XX LF
STRUCTURAL CONCRETE, BRIDGE	16 CY
STRUCTURAL CONCRETE, BRIDGE (POLYMER FIBER)	15 CY
BAR REINFORCING STEEL (BRIDGE)	8,000 LB
BRIDGE REMOVAL (PORTION)	1 LUMP SUM
MISCELLANEOUS METAL (BRIDGE)	60 LB
HANDRAILING	15 LF
MOBILIZATION	1 LUMP SUM

NOTE:
THE CONTRACTOR SHALL VERIFY ALL CONTROLLING FIELD DIMENSIONS BEFORE ORDERING OR FABRICATING ANY MATERIAL.

INDEX TO PLANS

SHEET NO.	TITLE
BR-01	GENERAL PLAN
BR-02	INDEX TO PLANS
BR-03	FOUNDATION PLAN
BR-04	ABUTMENT LAYOUT
BR-05	ABUTMENT DETAILS
BR-06	MISCELLANEOUS DETAILS
BR-07	LOG OF TEST BORINGS

2024 CALTRANS STANDARD PLAN REFERENCE KEY



2024 CALTRANS STANDARD PLANS LIST

A3A	ABBREVIATIONS (SHEET 1 OF 3)
A3B	ABBREVIATIONS (SHEET 2 OF 3)
A3C	ABBREVIATIONS (SHEET 3 OF 3)
A10A	LEGEND - LINES AND SYMBOLS (SHEET 1 OF 5)
A10B	LEGEND - LINES AND SYMBOLS (SHEET 2 OF 5)
A10C	LEGEND - LINES AND SYMBOLS (SHEET 3 OF 5)
A10D	LEGEND - LINES AND SYMBOLS (SHEET 4 OF 5)
A10E	LEGEND - LINES AND SYMBOLS (SHEET 5 OF 5)
A10F	LEGEND - SOIL (SHEET 1 OF 2)
A10G	LEGEND - SOIL (SHEET 2 OF 2)

PREFABRICATED PEDESTRIAN BRIDGE

1. ALL STRUCTURAL STEEL ELEMENTS ARE TO BE CONSTRUCTED USING WEATHERING STEEL ONLY.

2. STRUCTURAL DESIGN AND DETAILS FOR CONSTRUCTION OF THE PREFABRICATED STEEL TRUSS ARE THE RESPONSIBILITY OF THE CONTRACTOR. CONTRACTOR SHALL SUBMIT ALL ASSOCIATED DESIGN CALCULATIONS, PLANS, AND WORKING DRAWINGS TO THE ENGINEER OF RECORD FOR REVIEW AND AUTHORIZATION PRIOR TO ORDERING OR FABRICATING ANY MATERIALS.

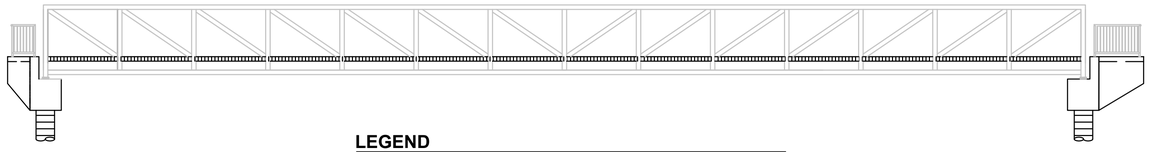

LEGEND

STRUCTURAL CONCRETE, BRIDGE

STRUCTURAL CONCRETE, BRIDGE (POLYMER FIBER) - DECK ONLY (f'c = 4 KSI)

CAST-IN-DRILLED-HOLE CONCRETE PILE (f'c = 4 KSI)

CONCRETE STRENGTH AND TYPE LIMITS

NO SCALE

REV	DATE	BY	DESCRIPTION

MNS
2025 Gateway Place, Suite 328
San Jose, CA 95110
805-692-6921 | www.mnsengineers.com

DESIGNED: M.EMBLEY
DRAWN: K.DIEGO
CHECKED: C.HARDEN
QA/QC: K. TURNER
CONSTRUCTABILITY: J.WILCENSKI

MICHAEL EMBLEY, P.E.

DATE

REGISTERED PROFESSIONAL ENGINEER
MICHAEL EMBLEY
No. 90710
Exp. 12/31/25
CIVIL
STATE OF CALIFORNIA

0 1/2 1 2
THIS BAR IS 2 INCHES AT FULL SCALE. IF NOT 2 INCHES, THEN SCALE ACCORDINGLY.

SCALE:
AS SHOWN

CITY OF SAN LEANDRO
INCORPORATED 1872

CARY-HAAS PEDESTRIAN BRIDGE
CITY OF SAN LEANDRO

INDEX TO PLANS

PROJECT NUMBER
CISLE.240498.00

DRAWING NUMBER
BR-02

SHEET NUMBER
5 OF **10**

C:\Box\Projects\CISLE San Leandro\CISLE 240498.00 Cary-Haas Pedestrian Bridge\3 Eng_CAD\3 Sheets\INDEX.dwg
Fri 18 Jul 25 - 22:26:06 PM by: Andrew Lozano

PILE DATA TABLE

LOCATION	PILE TYPE	NOMINAL RESISTANCE (KIPS)		DESIGN TIP ELEVATION (FT)	SPECIFIED TIP ELEVATION (FT)
		COMPRESSION	TENSION		
ABUT 1	24" CIDH	XX	0	XX (A) XX (C) XX (D)	XX
ABUT 2	24" CIDH	XX	0	XX (A) XX (C) XX (D)	XX

HYDROLOGIC SUMMARY

DRAINAGE AREA: X.XX SQ MI	
	DESIGN FLOOD
FREQUENCY	XXX-YR
DISCHARGE	X,XXX CFS
WATER SURFACE ELEVATION AT BRIDGE	53 FT

NOTES:

1. DESIGN TIP ELEVATIONS FOR ABUTMENTS ARE CONTROLLED BY: (A) COMPRESSION, (B) TENSION, (C) SETTLEMENT, (D) LATERAL LOAD.
2. THE SPECIFIED TIP ELEVATION SHALL NOT BE RAISED ABOVE THE DESIGN TIP ELEVATIONS FOR TENSION LOAD, LATERAL LOAD, AND TOLERABLE SETTLEMENT.



PLAN
SCALE: 1" = 15'

NOTE:
THE CONTRACTOR SHALL VERIFY ALL CONTROLLING FIELD DIMENSIONS BEFORE ORDERING OR FABRICATING ANY MATERIAL.

NOTES

1. EXISTING CONTOURS SHOWN.
2. UTILITY LOCATIONS SHOWN ARE APPROXIMATE AND SHALL BE VERIFIED PRIOR TO CONSTRUCTION.
3. FOR RIGHT-OF-WAY INFORMATION, SEE "RIGHT-OF-WAY AND PROPERTY LINE MAP" SHEET.
4. FOR "REMOVAL DETAILS", SEE "MISCELLANEOUS DETAILS" SHHET.

LEGEND

- EXISTING STRUCTURE
- LIMITS OF BRIDGE REMOVAL (PORTION)
- 24"Ø CIDH PILES
- EXISTING 18"Ø CIDH PILES
- XX.X — BOTTOM OF FOOTING ELEVATIONS
- XX.X — EXISTING BOTTOM OF FOOTING ELEVATIONS
- CO — EXISTING MANHOLE
- D — EXISTING STORM DRAIN MANHOLE
- SS — EXISTING SEWER MANHOLE
- W — EXISTING WATER MAIN

CONSTRUCTION NOTES

BENCHMARK

REV	DATE	BY	DESCRIPTION

MNS
2025 Gateway Place, Suite 328
San Jose, CA 95110
805-692-6921 | www.mnsengineers.com

DESIGNED:	M.EMBLEY
DRAWN:	K.DIEGO
CHECKED:	C.HARDEN
QA/QC:	K. TURNER
CONSTRUCTABILITY:	J.WILCENSKI

MICHAEL EMBLEY, P.E. — DATE

REGISTERED PROFESSIONAL ENGINEER — MICHAEL EMBLEY — No. 90710 — Exp. 12/31/25 — CIVIL — STATE OF CALIFORNIA

0 1/2 1 2
THIS BAR IS 2 INCHES AT FULL SCALE. IF NOT 2 INCHES, THEN SCALE ACCORDINGLY.

SCALE: AS SHOWN

CITY OF SAN LEANDRO INCORPORATED 1872

CARY-HAAS PEDESTRIAN BRIDGE
CITY OF SAN LEANDRO

FOUNDATION PLAN

PROJECT NUMBER: **CISLE.240498.00**
DRAWING NUMBER: **BR-03**
SHEET NUMBER: **6** OF **10**

F:\18.24 25 02\24 PW by Andrea Lozano C:\Box\Projects\CISLE San Leandro\CISLE 2-240498 (D) Cary-Haas Pedestrian Bridge\5 Eng_CADD Sheets\FOUNDATION PLAN.dwg

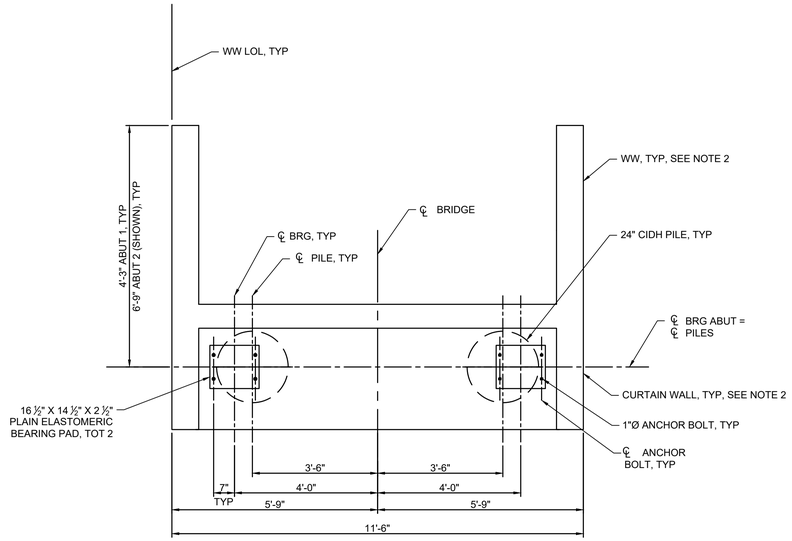

PLAN

SCALE: 1/2" = 1'

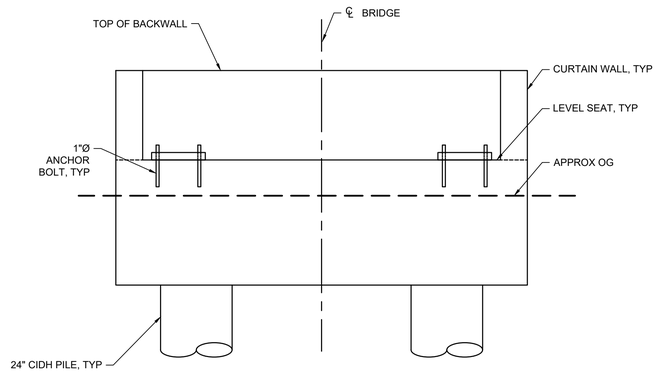

ELEVATION

SCALE: 1/2" = 1'

NOTE:
THE CONTRACTOR SHALL VERIFY ALL CONTROLLING FIELD DIMENSIONS BEFORE ORDERING OR FABRICATING ANY MATERIAL.

NOTES

1. HANDRAILING NOT SHOWN. FOR "HAND RAILING DETAILS", SEE "MISCELLANEOUS DETAILS" SHEET.
2. FOR "WINGWALL DETAILS", "EXPANSION JOINT DETAIL" AND "BEARING DETAILS", SEE "ABUTMENT DETAILS" SHEET.

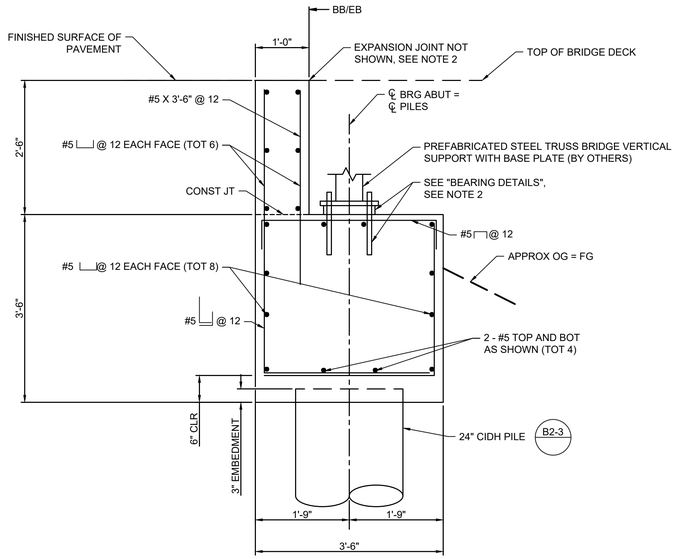

TYPICAL SECTION

SCALE: 3/4" = 1'

REV	DATE	BY	DESCRIPTION

MNS
2025 Gateway Place, Suite 328
San Jose, CA 95110
805-692-6921 | www.mnsengineers.com

DESIGNED:	M.EMBLEY
DRAWN:	K.DIEGO
CHECKED:	C.HARDEN
QA/QC:	K. TURNER
CONSTRUCTABILITY:	J.WILCENSKI

MICHAEL EMBLEY, P.E.

DATE

REGISTERED PROFESSIONAL ENGINEER
MICHAEL EMBLEY
No. 90710
Exp. 12/31/25
CIVIL
STATE OF CALIFORNIA

0 1/2 1 2

THIS BAR IS 2 INCHES AT FULL SCALE. IF NOT 2 INCHES, THEN SCALE ACCORDINGLY.

SCALE:

AS SHOWN

CITY OF SAN LEANDRO
INCORPORATED 1872

CARY-HAAS PEDESTRIAN BRIDGE
CITY OF SAN LEANDRO

ABUTMENT LAYOUT

PROJECT NUMBER
CISLE.240498.00

DRAWING NUMBER
BR-04

SHEET NUMBER
7 OF **10**

C:\Box\Projects\CISLE San Leandro\CISLE 240498.00 Cary-Haas Pedestrian Bridge\Eng_CADD Sheets\ABUTMENT LAYOUT.dwg
Fri 04.26.24 08:10:55 PM by: Andrea Lozano

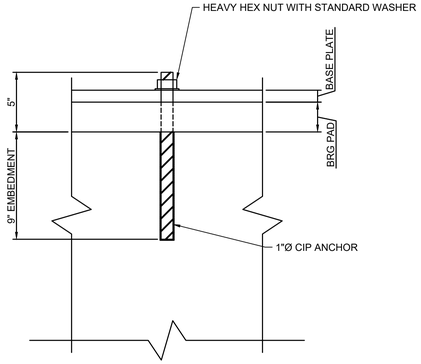

ANCHOR DETAILS
SCALE: 2" = 1'

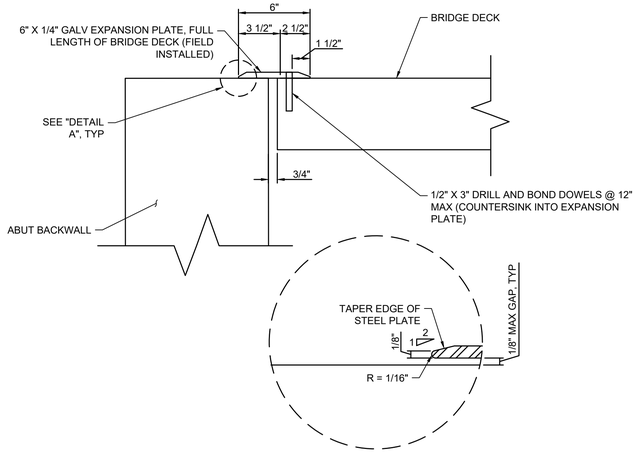

DETAIL A
NO SCALE

EXPANSION JOINT DETAILS
SCALE: 2" = 1'

NOTES
1. HANDRAILING NOT SHOWN. FOR "HANDRAILING DETAILS," SEE "MISCELLANEOUS DETAILS" SHEET

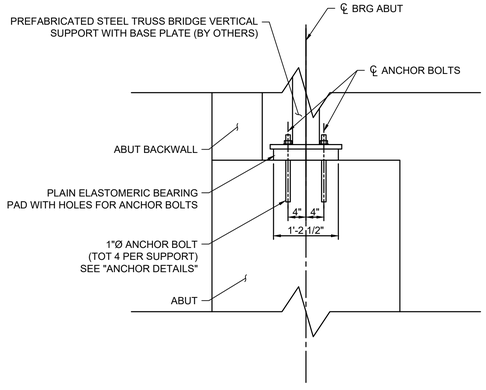

BEARING DETAILS
SCALE: 3/4" = 1'

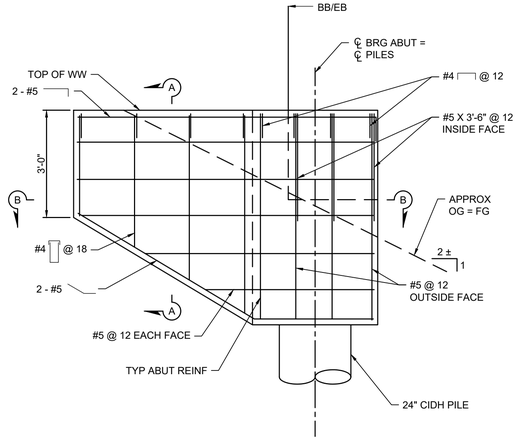

WINGWALL ELEVATION
SCALE: 1/2" = 1'

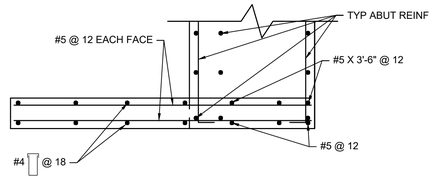

SECTION B-B
SCALE: 1/2" = 1'

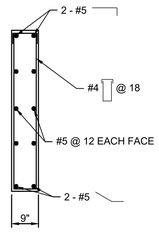

SECTION A-A
SCALE: 1/2" = 1'

NOTE:
THE CONTRACTOR SHALL VERIFY ALL CONTROLLING FIELD DIMENSIONS BEFORE ORDERING OR FABRICATING ANY MATERIAL.

REV	DATE	BY	DESCRIPTION

MNS
2025 Gateway Place, Suite 328
San Jose, CA 95110
805-692-6921 | www.mnsengineers.com

DESIGNED:	M.EMBLEY
DRAWN:	K.DIEGO
CHECKED:	C.HARDEN
QA/QC:	K. TURNER
CONSTRUCTABILITY:	J.WILCENSKI

MICHAEL EMBLEY, P.E. — DATE

REGISTERED PROFESSIONAL ENGINEER — MICHAEL EMBLEY — No. 90710 — Exp. 12/31/25 — CIVIL — STATE OF CALIFORNIA

0 1/2 1 2
THIS BAR IS 2 INCHES AT FULL SCALE. IF NOT 2 INCHES, THEN SCALE ACCORDINGLY.

SCALE: AS SHOWN

CITY OF SAN LEANDRO — INCORPORATED 1872

CARY-HAAS PEDESTRIAN BRIDGE
CITY OF SAN LEANDRO

ABUTMENT DETAILS

PROJECT NUMBER: CISLE.240498.00
DRAWING NUMBER: BR-05
SHEET NUMBER: 8 OF 10

Fri 10 Jul 25 04:10:08 PM by Andres Lizarre
C:\Box\Projects\CISLE San Leandro\CISLE 240498.00 Cary-Haas Pedestrian Bridge\Eng_CAD\3 Sheets\ABUTMENT DETAILS.dwg

NOTES

1. RAILS, POSTS, AND PICKETS SHALL BE GALVANIZED STEEL PIPE.
2. HANDRAILING WELDS SHALL BE SLOT OR FILLET WELDS EQUAL TO THICKNESS OF PIPE. WELD ALL JOINTS ALL AROUND.
3. EXISTING ABUTMENT 1 SHOWN, EXISTING ABUTMENT 2 SIMILAR. REMOVE ENTIRE EXISTING ABUTMENT, APPROACH SLAB, AND WINGWALLS. REMOVE THE TOP 1-ft OF THE EXISTING CIDH PILE.

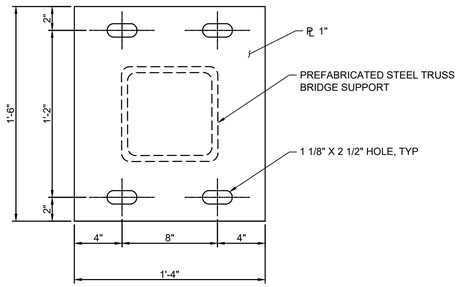

EXPANSION END

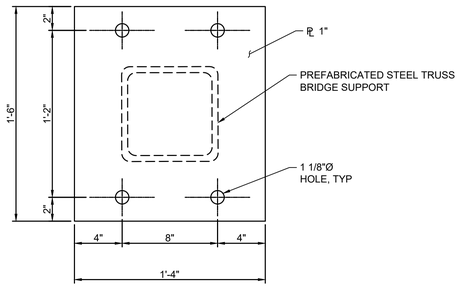

FIXED END

BASE PLATE DETAIL
SCALE: 1" = 6"

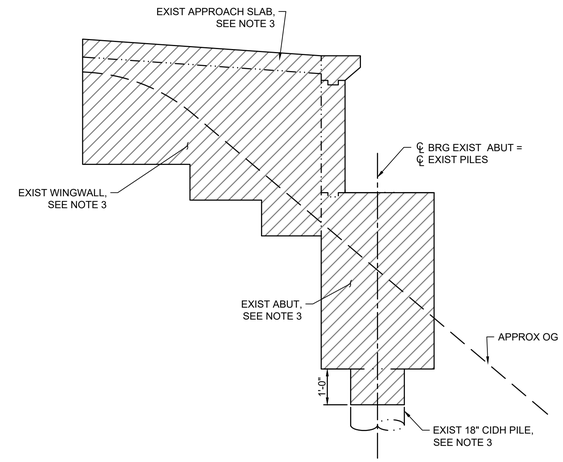

REMOVAL DETAILS
SCALE: 1/2" = 1'

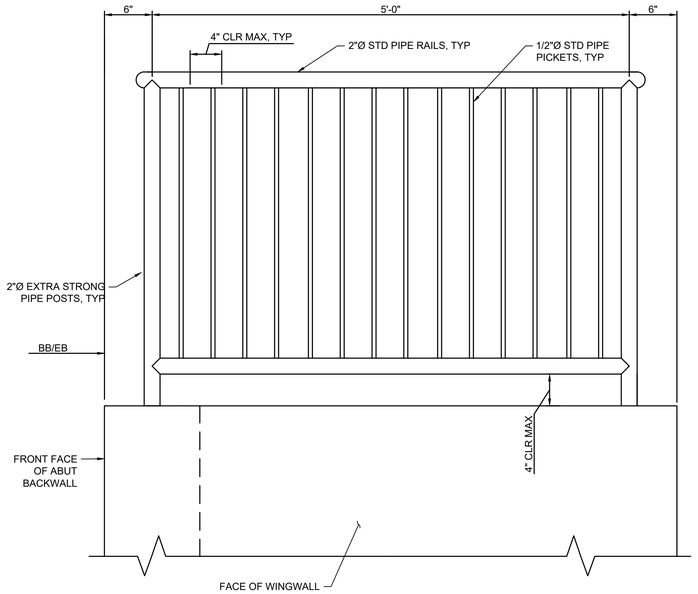

ELEVATION
NOTE: ABUT 2 SHOWN, ABUT 1 SIMILAR

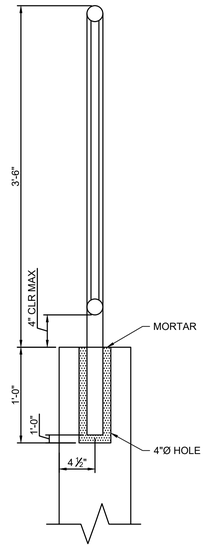

SECTION

HANDRAILING DETAILS
SCALE: 1" = 9"

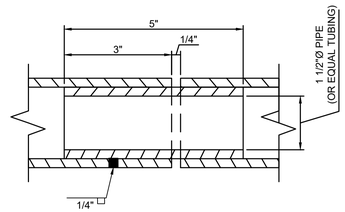

SLIP JOINT DETAIL
SCALE: 1" = 2"

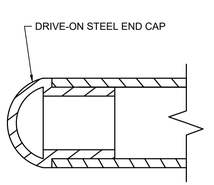

CAP DETAIL FOR RAIL END
SCALE: 1" = 2"

NOTE:
THE CONTRACTOR SHALL VERIFY ALL CONTROLLING FIELD DIMENSIONS BEFORE ORDERING OR FABRICATING ANY MATERIAL.

REV	DATE	BY	DESCRIPTION

MNS
2025 Gateway Place, Suite 328
San Jose, CA 95110
805-692-6921 | www.mnsengineers.com

DESIGNED:	M.EMBLEY
DRAWN:	K.DIEGO
CHECKED:	C.HARDEN
QA/QC:	K. TURNER
CONSTRUCTABILITY:	J.WILCENSKI

MICHAEL EMBLEY, P.E. — DATE

REGISTERED PROFESSIONAL ENGINEER — MICHAEL EMBLEY — No. 90710 — Exp. 12/31/25 — CIVIL — STATE OF CALIFORNIA

0 1/2 1 2
THIS BAR IS 2 INCHES AT FULL SCALE. IF NOT 2 INCHES, THEN SCALE ACCORDINGLY.

SCALE: AS SHOWN

CITY OF SAN LEANDRO — INCORPORATED 1872

CARY-HAAS PEDESTRIAN BRIDGE
CITY OF SAN LEANDRO

MISCELLANEOUS DETAILS

PROJECT NUMBER: **CISLE.240498.00**
DRAWING NUMBER: **BR-06**
SHEET NUMBER: **9** OF **10**

Fri 9.Jul 25 02:43:34 PM by: Andrea Lozano C:\Box\Projects\CISLE San Leandro\CISLE 240498.00 Cary-Haas Pedestrian Bridge\Eng_CADD Sheets\APPROACH SLAB AND DRAINAGE DETAILS.dwg

NOTE:
THE CONTRACTOR SHALL VERIFY ALL CONTROLLING FIELD
DIMENSIONS BEFORE ORDERING OR FABRICATING ANY MATERIAL.

REV	DATE	BY	DESCRIPTION

MNS
2025 Gateway Place, Suite 328
San Jose, CA 95110
805-692-6921 | www.mnsengineers.com

DESIGNED:	M.EMBLEY
DRAWN:	K.DIEGO
CHECKED:	C.HARDEN
QA/QC:	K. TURNER
CONSTRUCTABILITY:	J.WILCENSKI

MICHAEL EMBLEY, P.E.

DATE

REGISTERED PROFESSIONAL ENGINEER
MICHAEL EMBLEY
No. 90710
Exp. 12/31/25
CIVIL
STATE OF CALIFORNIA

0 1/2 1 2

THIS BAR IS 2 INCHES AT FULL SCALE. IF NOT 2 INCHES, THEN SCALE ACCORDINGLY.

SCALE:

AS SHOWN

CITY OF SAN LEANDRO
INCORPORATED 1872

CARY-HAAS PEDESTRIAN BRIDGE
CITY OF SAN LEANDRO

LOG OF TEST BORINGS

PROJECT NUMBER
CISLE.240498.00

DRAWING NUMBER
BR-07

SHEET NUMBER
10 OF **10**

© Box/Projects/CISLE San Leandro/CISLE.240498.00 Cary-Haas Pedestrian Bridge/1 Eng_CADD Sheets/LOG OF TEST BORINGS.dwg
Fri 04.25 04:01:19 PM By: Andrea Lozano

Attachment 2: Biological Resources Evaluation

Biological Resources Evaluation

Cary-Haas Pedestrian Bridge Replacement Project

San Leandro, California

July 29, 2025







Prepared by

EMC Planning Group

BIOLOGICAL RESOURCES EVALUATION

CARY-HAAS PEDESTRIAN BRIDGE REPLACEMENT PROJECT

PREPARED FOR

MNS Engineers, Inc.
Shelah Riggs, Principal Regulatory Specialist
201 N. Calle Cesar Chaves, Suite 300
Santa Barbara, CA 93103
Tel 909.419.4268
sriggs@msnengineers.com

PREPARED BY

EMC Planning Group Inc.
601 Abrego Street
Monterey, CA 93940
Tel 831.649.1799
Fax 831.649.8399
Rose Ashbach, Associate Biologist
ashbach@emcplanning.com
www.emcplanning.com

July 29, 2025

This document was produced on recycled paper.

Table of Contents

EXECUTIVE SUMMARY ES-1

1.0 INTRODUCTION 1-1

1.1 Project Summary and Report Purpose 1-1

1.2 Project Location 1-1

1.3 Environmental Setting 1-2

2.0 REGULATORY SETTING 2-1

2.1 Federal Regulations 2-1

2.2 State Regulations 2-3

2.3 Regional/Local Regulations 2-5

3.0 METHODS 3-1

3.1 Background Research 3-1

3.2 Field Survey 3-1

4.0 EXISTING BIOLOGICAL CONDITIONS 4-1

4.1 Plant Communities 4-1

4.2 Wildlife Habitats 4-2

4.3 Wetlands and Waterways 4-5

5.0 SPECIAL-STATUS BIOLOGICAL RESOURCES 5-1

5.1 Overview 5-1

5.2 Special-Status Plants 5-1

5.3 Special-Status Wildlife 5-2

5.4 Special-Status Natural Communities 5-8

5.5 Jurisdictional Wetlands and Waters 5-8

5.6 Wildlife Movement 5-9

5.7 Regulated Trees 5-9

6.0 IMPACTS AND RECOMMENDED MEASURES 6-1
6.1 General Avoidance/Minimization Measures 6-1
6.2 Special-Status Plants 6-1
6.3 Special-Status Wildlife 6-1
6.4 Special-Status Natural Communities 6-4
6.5 Jurisdictional Wetlands and Waters 6-4
6.6 Wildlife Movement Corridors 6-5
7.0 REPORT PREPARERS AND SOURCES 7-1
7.1 Report Preparers 7-1
7.2 Sources 7-1

Appendices

Appendix A Special-Status Species with the Potential to Occur in the Project Vicinity

Figures

Figure 1-1 Project Location 1-3
Figure 1-2 Aerial Photograph 1-5
Figure 1-3 Site Photographs 1-7
Figure 1-4 Site Plan 1-9
Figure 4-1 Habitat Map 4-3
Figure 5-1 Special-Status Species within the Project Vicinity 5-3

Executive Summary

The purpose of this biological assessment is to review the proposed Cary-Haas Pedestrian Bridge Replacement Project to determine to what extent the proposed action may affect threatened or endangered species, species proposed for listing, or designated or proposed critical habitats. The analysis in this document focuses on the potential impacts of the project on biological resources at the project site, and identifies measures to reduce or avoid these impacts. The analysis has been prepared pursuant to the National Environmental Policy Act, the federal and state Endangered Species Acts, and the California Environmental Quality Act.

The proposed project is located between Cary Drive and Haas Avenue, spanning San Leandro Creek. The approximately one-acre project site is situated in San Leandro, Alameda County, California. The scope of work includes replacing a pedestrian bridge over San Leandro Creek that was previously removed due to damage caused by a fallen tree.

Biological surveys were conducted in March 2025 to evaluate biological resources at the project site, including potential special-status plant and wildlife species, and protected wetland and wildlife habitats. The assessment also included a review of the California Natural Diversity Database, the official species list generated using the U.S. Fish and Wildlife Service's Information Planning and Conservation System, existing scientific literature, aerial photographs, technical background information, site plans, and policies applicable to projects located in the City of San Leandro and Alameda County.

San Leandro Creek originates in the Oakland and San Leandro Hills and flows west through the cities of San Leandro and Oakland before ultimately discharging into San Francisco Bay. The west slope of the creek is dominated by invasive plant species, while the east bank is currently undergoing restoration and has been planted with riparian tree saplings. Although no suitable habitat was identified for many special-status species, additional analysis was conducted for the following species due to the presence of potentially suitable habitat within the project site: Congdon's tarplant (*Centromadia parryi* ssp. *congdonii*), California red-legged frog (*Rana draytonii*), foothill yellow-legged frog (*Rana boylii*), northwestern pond turtle (*Actinemys marmorata*), steelhead (*Oncorhynchus mykiss irideus*), western bumble bee (*Bombus occidentalis*), hoary bat (*Lasiurus cinereus*), and various protected nesting birds and raptors.

Special-status species and their habitats are protected under both state and federal regulations. To address potential impacts to protected species as the result of the proposed project, mitigation measures have been proposed to avoid or minimize impacts to the extent feasible. If any special-status species are identified during preconstruction surveys or during construction, project activities that could disturb or harm those species shall not proceed until coordination with the appropriate regulatory agencies has been completed and effective protective measures are implemented.

Impacts to state and federally protected wetlands and waters are considered potentially significant. The proposed development is adjacent to San Leandro Creek, and both direct impacts from ground disturbance and indirect impacts—such as noise, dust, and runoff—may result in significant adverse environmental effects on aquatic features. However, with the implementation of appropriate avoidance and minimization measures, these potential impacts can be reduced or determined as not likely to adversely affect protected resources.

With implementation of avoidance and minimization measures, and agency permitting and coordination, the proposed project will not conflict with any local policies or ordinance protecting biological resources, result in significant impacts to wildlife movement or conflict with the provisions of an adopted Habitat Conservation Plan, Natural Community Conservation Plan, or other approved local, regional, or state habitat conservation plan.

1.0 Introduction

1.1 Project Summary and Report Purpose

This Biological Resource Evaluation assesses the proposed Cary-Haas Pedestrian Bridge Replacement (project) located over the San Leandro Creek, connecting Cary Avenue and Haas Avenue between Bancroft Avenue and San Jose Street, San Leandro, California. A location map is attached as Figure 1-1, Project Location. The project includes the replacement of the pedestrian bridge, ADA improvements to the existing sidewalk at the entrance to the bridge on Haas Avenue and the formalization of a concrete walkway connecting the existing concrete sidewalk on Cary Drive to the entrance of the bridge.

The purpose of this Biological Resources Evaluation is to analyze the potential impacts from the proposed project on special-status biological resources, and to provide specific measures to avoid or minimize these impacts.

1.2 Project Location

The Cary-Haas Pedestrian Bridge is located in the East Bay region of the San Fracisco Bay Area, nestled between Oakland to the northwest, Hayward to the southeast, and San Fransico Bay to the west. The approximately one-acre project site is located over San Leandro Creek, connecting Cary Avenue and Haas Avenue, between Bancroft Avenue and San Jose Street, within the City of San Leandro in Alameda County, California. Although the project site is situated within the City of San Leandro, the lower portions of the creek are under the jurisdiction of the Alameda County Flood Control and Water Conservation District (ACFCWCD). The creek and its banks are within unincorporated Alameda County.

The project site is split between two small parcels (APN 77-470-1-2 and APN 76-388-999-99), and located adjacent to the Bancroft Middle School, APN 77-470-1-3. The site is approximately one-acre with the majority of the proposed development in APN 76-388-999-99.

The project involves replacing a pedestrian bridge over San Leandro Creek, located within a residential area. Construction staging activities would occur in an unused portion of the Bancroft Middle School property. An aerial photograph showing existing conditions on the site and proposed development areas is included as Figure 1-2, Aerial Photograph, and representative site photographs are presented in Figure 1-3, Site Photographs. Figure 1-4, Site Plan, shows the proposed bridge project.

1.3 Environmental Setting

The project site is located in an area dominated by urban, residential development. It includes a section of the highly constrained San Leandro Creek, which is bordered on both sides by dense urban development. Vegetation throughout the site is heavily disturbed and primarily composed of invasive species. The surrounding topography includes a mix of coastal flatlands to the west and rolling hills to the east.

The creek banks slope steeply upward to adjacent residential areas. On the Cary Avenue side, vegetation has been removed and replanted with riparian tree saplings and treated with erosion control blankets and wattles. The elevation at the top of bank is approximately 22 meters with the creek itself situated at about 13.3 meters.

San Leandro Creek is a significant natural resource for the City of San Leandro and the surrounding communities. The watershed provides abundant open space areas and recreation opportunities, and its creek system and tributaries supply drinking water to the area. Notably, much of the creek has been maintained in its natural state, proving a riparian habitat that supports wildlife throughout the watershed, including in the urban environment.

The project site experiences a Mediterranean-type climate with cool, wet winters and warm, dry summers. The San Francisco Bay has a moderating effect on temperatures, producing a maritime temperature regime with mild temperatures year-round. The City of San Landro receives an average of approximately 19.5 inches in annual precipitation (Climate Data 2025), the majority of rainfall occurring between November and March.

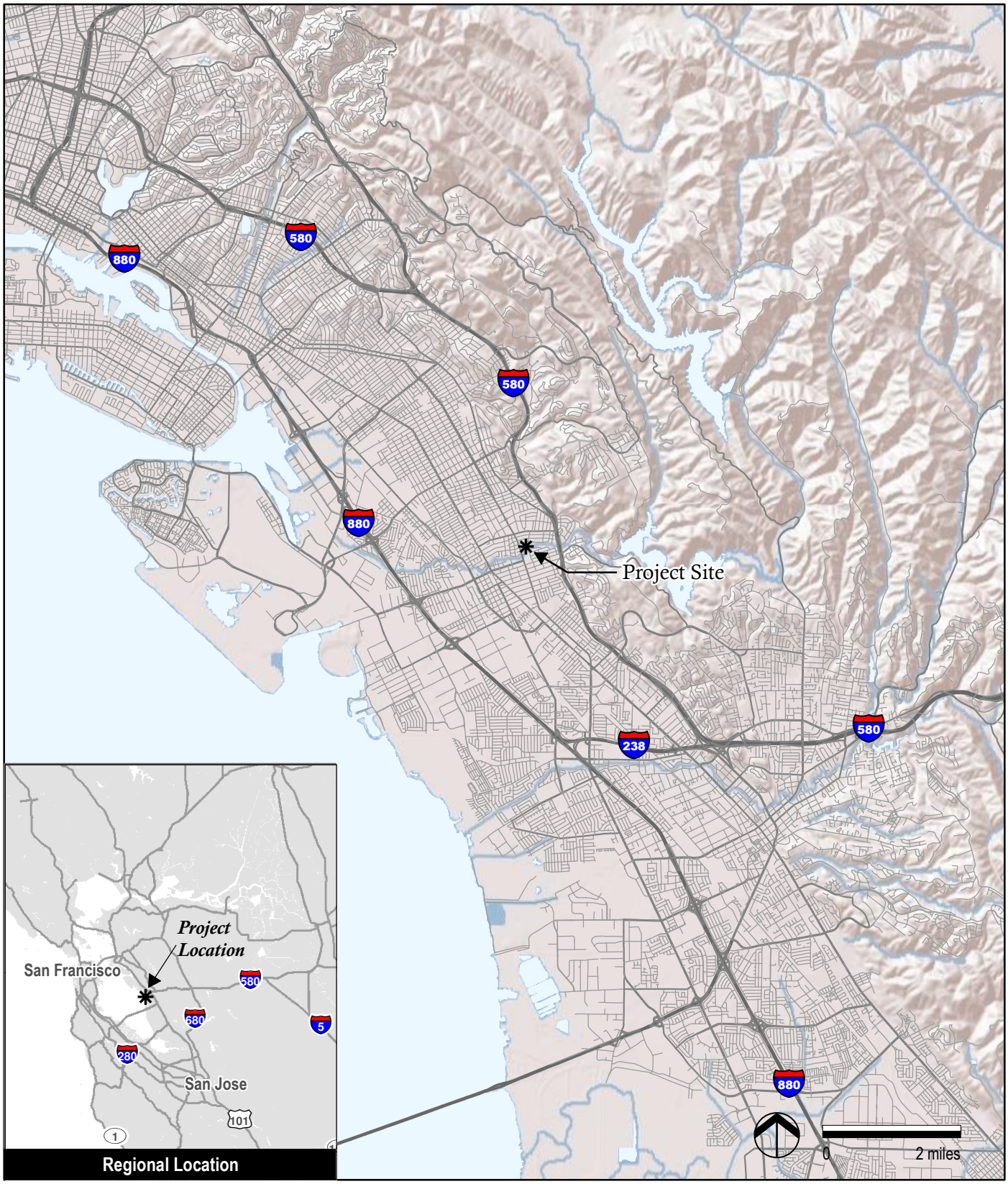

Source: ESRI 2025

Figure 1-1

Location Map

Cary-Haas Pedestrian Bridge Replacement Project BRE

This side intentionally left blank.



0 80 feet

Approximate Project Boundary

Source: ESRI 2025, Alameda County 2025, Google Earth 2025

Figure 1-2

Aerial Photograph

Cary-Haas Pedestrian Bridge Replacement Project BRE

This side intentionally left blank.



Photo 1. Potential Staging area within Bancroft Middle School parcel. Compacted gravel soil with ruderal vegetation.



Photo 2. Looking west from east slope. View of bridge replacement Site and invasive vegetation on slope.



Photo 3. View of planted slope on the east slope of the project site.



Photo 4. Looking east from Haas Ave. at restored east slope.



Photo 5. In San Leandro Creek looking south.



Photo 6. Location of former pedestrian bridge.

Source: EMC Planning Group 2025

Figure 1-3

Site Photographs

Cary-Haas Pedestrian Bridge Replacement Project BRE

This side intentionally left blank.

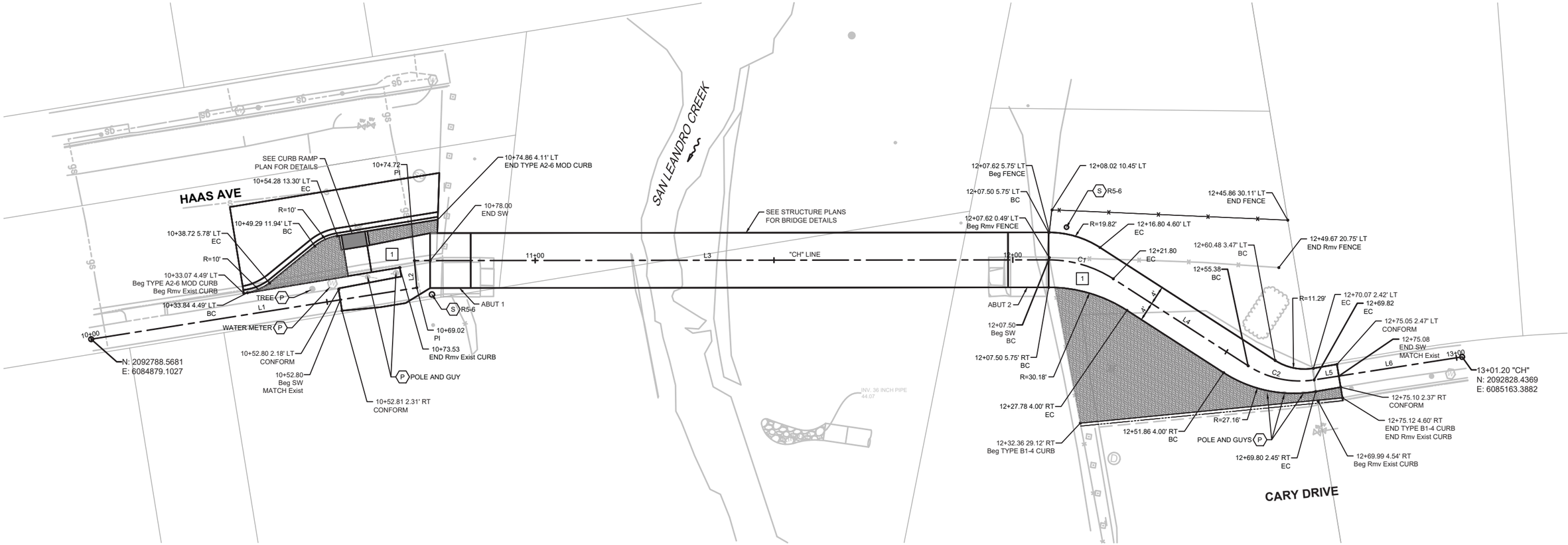

0 NTS

Project Site

Source: MNS Engineers 2025

Figure 1-4
Site Plan

Cary-Haas Pedestrian Bridge Replacement Project BRE

This side intentionally left blank.

2.0 Regulatory Setting

This section includes a summary of regulations for the protection of biological resources applicable to the project.

2.1 Federal Regulations

Endangered Species Act

The federal Endangered Species Act of 1973 protects species that the U.S. Fish and Wildlife Service (USFWS) has listed as Endangered or Threatened. Permits may be required from USFWS if activities associated with a proposed project would result in the "take" of a federally listed species or its habitat. Under the Act, the definition of "take" is to "harass, harm, pursue, hunt, shoot, wound, kill, trap, capture, or collect, or to attempt to engage in any such conduct." USFWS has also interpreted the definition of "harm" to include significant habitat modification that could result in take. "Take" of a listed species is prohibited unless (1) a Section 10(a) permit has been issued by the USFWS or (2) an Incidental Take Statement has been obtained through formal consultation between a federal agency and the USFWS pursuant to Section 7 of the Act.

Migratory Bird Treaty Act

The Migratory Bird Treaty Act of 1918 prohibits killing, possessing, or trading in migratory birds, and protects the nesting activities of native birds including common species, except in accordance with certain regulations prescribed by the Secretary of the Interior. Over 1,000 native nesting bird species are currently protected under the federal law. This Act encompasses whole birds, parts of birds, bird nests, and eggs.

The USFWS published a proposed rule to clarify prohibitions governing the "take" of birds under the Migratory Bird Treaty Act on February 3, 2020. This proposed rule clarifies that the scope of the Migratory Bird Treaty Act applies only to intentional injuring or killing of birds. Conduct that results in the unintentional (incidental) injury or death of migratory birds is not prohibited under the Act. On January 7, 2021, the final regulation defining the scope of the Migratory Bird Treaty Act was published in the Federal Register. The rule went into effect on February 8, 2021.

On October 4, 2021, the USFWS published a final rule revoking the January 7, 2021, regulation that limited the scope of the Migratory Bird Treaty Act. With this final and formal revocation of the January 7 rule, the USFWS returns to implementing the Migratory Bird Treaty Act as prohibiting incidental take and applying enforcement discretion, consistent with judicial precedent and long-standing agency practice prior to 2017. This final rule went into effect on December 3, 2021.

Clean Water Act

Section 404 of the Clean Water Act of 1972 regulates the discharge of dredge and fill material into "Waters of the U.S.". "Waters of the U.S." are waters such as oceans, rivers, streams, lakes, ponds, and wetlands subject to U.S. Army Corps of Engineers (USACE) Regulatory Program jurisdiction under Section 404 of the Clean Water Act. Certain artificial drainage channels and wetlands have also been considered jurisdictional "Waters of the U.S."

The U.S. Environmental Protection Agency and the U.S. Army Corps of Engineers are in receipt of the U.S. Supreme Court's May 25, 2023, decision in the case of *Sackett v. Environmental Protection Agency*. On August 29, 2023, the U.S. Environmental Protection Agency and the U.S. Army Corps of Engineers issued a final ruling amending the regulatory definition of "waters of the United States" to conform with the *Sackett* decision.

The USACE determines the extent of its jurisdiction as defined by ordinary high-water marks on channel banks, wetland boundaries, and/or connectivity to a navigable water. Wetlands are habitats with soils that are intermittently or permanently saturated or inundated. The resulting anaerobic conditions naturally select for plant species known as hydrophytes that show a high degree of fidelity to such soils. Wetlands are identified by the presence of hydrophytic vegetation, hydric soils (soils intermittently or permanently saturated by water), and wetland hydrology according to methodologies outlined in the 1987 *Corps of Engineers Wetlands Delineation Manual* and the 2008 *Interim Regional Supplement to the Corps of Engineers Wetland Delineation Manual: Arid West Region (Version 2.0)*.

Activities that involve the discharge of fill into jurisdictional wetlands or waters are subject to the permit requirements of the USACE. Discharge permits are typically issued on the condition that the project proponent agrees to provide compensatory mitigation which results in no net loss of area, function, or value, either through wetland creation, restoration, or the purchase of credits through an approved mitigation bank. In addition to individual discharge permits, the USACE also issues nationwide permits applicable for certain activities.

Pursuant to the USACE Manuals, key criteria for determining the presence of wetlands are:

- The presence of inundated or saturated soil conditions resulting from permanent or periodic inundation by ground water or surface water; and
- A prevalence of vegetation typically adapted for life in saturated soil conditions (hydrophytic vegetation).

Explicit in the definition is the consideration of three environmental parameters: hydrology, soil, and vegetation. Positive wetland indicators of all three parameters are normally present in wetlands. The assessment of all three parameters in normal circumstances enhances the technical accuracy, consistency, and credibility of a wetland determination and is required per the USACE Manuals.

2.2 State Regulations

California Endangered Species Act

Pursuant to the California Endangered Species Act and Section 2081 of the California Fish and Game Code, an Incidental Take Permit from the CDFW is required for projects that could result in the "take" of a state-listed Threatened or Endangered species. "Take" is defined under the Act as an activity that would directly or indirectly kill an individual of a species; "take" is defined in Section 86 of the California Fish and Game Code as "hunt, pursue, catch, capture, or kill, or attempt to hunt, pursue, catch, capture, or kill." If a proposed project would result in the "take" of a state-listed species, then a CDFW Incidental Take Permit, including the preparation of a species conservation plan, would be required.

Nesting Birds and Birds of Prey

Sections 3505, 3503.5, and 3800 of the California Fish and Game Code prohibit the take, possession, or destruction of birds, including their nests or eggs. Birds of prey (the orders Falconiformes and Strigiformes) are specifically protected under provisions of the California Fish and Game Code, Section 3503.5. This section of the Code establishes that it is unlawful to take, possess, or destroy any birds of prey or to take, possess, or destroy the nest or eggs of any such bird except as otherwise provided by this Code. Disturbance that causes nest abandonment and/or loss of reproductive effort, such as construction during the bird nesting season, is considered "take" by the CDFW.

Streambed Alterations

The CDFW has jurisdiction over the bed and bank of natural drainages according to provisions of Sections 1601 through 1603 of the California Fish and Game Code. Diversions, obstructions, or changes to the natural flow or bed, channel, or bank of any river, stream, or lake in California that supports wildlife resources and/or riparian vegetation are subject to CDFW regulations. Activities that would disturb these drainages are regulated by the CDFW; authorization is required in the form of a Streambed Alteration Agreement. Such an agreement typically stipulates certain measures that will protect the habitat values of the drainage in question.

California Porter-Cologne Water Quality Control Act

Under the California Porter-Cologne Water Quality Control Act, the applicable Regional Water Quality Control Board (RWQCB) may necessitate Waste Discharge Requirements for the fill or

alteration of "Waters of the State," which according to California Water Code Section 13050 includes "any surface water or groundwater, including saline waters, within the boundaries of the state." The RWQCB may, therefore, necessitate Waste Discharge Requirements even if the affected waters are not under USACE jurisdiction. Also, under Section 401 of the Clean Water Act, any activity requiring a USACE Section 404 permit must also obtain a state Water Quality Certification (or waiver thereof) to ensure that the proposed activity will meet state water quality standards. The applicable state RWQCB is responsible for administering the water quality certification program and enforcing National Pollutant Discharge Elimination System permits.

Regulation of land-use activities within wetlands may also occur at the state, county and local municipality level. Wetland regulations administered at the state, county, and local municipality level typically expand upon the scope of federal regulations. If regulations are in place at the state, county or local municipality level, they are generally written to be inclusive of wetlands that are not subject to federal regulations. An example is hydrologically-isolated wetlands, which includes wetlands not immediately adjacent to "Waters of the United States."

The State Water Resources Control Board and nine Regional Water Quality Control Boards (collectively, the Water Boards) are the primary regulatory authorities for protection of wetlands in California, although other agencies have additional authorities over certain geographic areas or wetland functions, especially in regard to habitat values. The Water Boards' authority is derived from California's Porter-Cologne Water Quality Control Act, which defines "Waters of the State" as "any surface water or groundwater, including saline waters, within the boundaries of the state."

In 1993, by executive order, the state adopted a goal of no net loss under the California Wetlands Conservation Policy, along with a goal to "achieve a long-term net gain in the quantity, quality, and permanence of wetlands acreage and values in California in a manner that fosters creativity, stewardship, and respect for private property" (California State Water Board 2022).

Coastal wetlands are also protected under California's Coastal Act (CCA) of 1976, which defines wetlands as "lands within the coastal zone which may be covered periodically or permanently with shallow water and include saltwater marshes, freshwater marshes, open or closed brackish water marshes, swamps, mudflats, and fens."

California Environmental Quality Act (CEQA)

CEQA Guidelines Appendix G contains standards of significance to indicate that a project may have a significant effect on biological resources if it would:

- Have a substantial adverse effect, either directly or through habitat modifications, on any species identified as a candidate, sensitive, or special-status species in local or regional plans, policies, or regulations, or by the CDFW or USFWS;

- Have a substantial adverse effect on any riparian habitat or other sensitive natural community identified in local or regional plans, policies, or regulations, or by the CDFW or USFWS;
- Have a substantial adverse effect on federally protected wetlands as defined by Section 404 of the Clean Water Act (including, but not limited to, marsh, vernal pool, coastal, etc.) through direct removal, filling, hydrological interruption, or other means;
- Interfere substantially with the movement of any native resident or migratory fish or wildlife species or with established native resident or migratory wildlife corridors, or impede the use of native wildlife nursery sites;
- Conflict with any local policies or ordinances protecting biological resources, such as a tree preservation policy or ordinance; and/or
- Conflict with the provisions of an adopted Habitat Conservation Plan, Natural Community Conservation Plan, or other approved local, regional, or state habitat conservation plan.

2.3 Regional/Local Regulations

San Leandro General Plan 2035 (GP)

The San Leandro General Plan was adopted by the City Council in 2016 and applies to land within the City of San Leandro. The *2035 San Leandro General Plan* Open Space, Conservation, and Parks (OSC) element contains the following goal and policies associated with biological resources that are applicable to the proposed project:

GOAL OSC-5 Protect San Leandro Creek as a renewed open space and natural resource, a green connection between the San Leandro Hills and San Francisco Bay, and a core part of San Leandro's identity.

Policy OSC-5.4 Creek Access. Pursue increased public access to and along San Leandro Creek through trails, new and expanded parks, and open space set-asides within future creek-side developments

GOAL OSC-1 Identify, protect, and enhance San Leandro's significant plant and animal communities**.**

Policy OSC-6.2 Mitigation of Development Impacts. Require measures to mitigate the impacts of development or public improvements on fish and wildlife habitat, plant resources, and other valuable natural resources in the City.

Policy OSC-6.4 Species of Special Concern. Ensure that local planning and development decisions do not damage the habitat of rare, endangered, and threatened species, and other species of special concern in the City and nearby areas. Action OSC-6.4.A: Biological Assessments Require biological assessments for development in areas where special status species may be present. Require mitigation in accordance with state and federal regulations where potential adverse impacts exist.

Alameda County General Plan

The Alameda County General Plan Conservation Element (CE) was adopted in 1976 and amended in 1994 and cover unincorporated areas in Alameda County outside of the Castro Valley, Eden, and East County areas.

> Goal (CE): **Water**. To insure and maintain a continuing supply of high water quality for the citizens of Alameda County.
>
> Objective 8) To achieve coordination of the state, regional, and local water management agencies and policies throughout the County.
>
> Goal (CE): Conservation of Vegetative and Wildlife Resources. To protect and enhance wildlife habitats and natural vegetation areas in Alameda County.
>
> Objectives 1) Identify areas of critical or sensitive concern for wildlife and vegetation.

San Leandro Code of Ordinances

The City Code of Ordinance contain local legislation that is applicable to the proposed project:

Section 5-2-205 Street Trees Property of the City. All street trees within the City of San Leandro are the property of the City. The Director shall have exclusive authority, except as hereinafter provided, to plant, remove, prune, inspect, maintain, root prune or otherwise alter such street trees

Section 5-2-225 Requests for Removal, Private Works. Upon approval of the Director, any person requesting street tree service pursuant to Section 5-2-210 may undertake such work privately or by agreement with a private nursery or tree service. Such work shall conform with all of the following:

1. The property owner shall obtain an encroachment permit from the Engineering and Transportation Department prior to pruning or removal of a City tree.
2. The tree removal shall include stump-grinding, with return of the planting area to either softscape or hardscape that does not create a tripping hazard.
3. If a replacement tree is not requested, the property owner shall be required to pay the City the fee set forth in §6.4.100 of the San Leandro Administrative Code for a tree to be planted in a location of the City's choosing.

Section 3-15-220 Watercourse Protection. Every person owning property through which a watercourse passes, or such person's lessee or tenant, shall keep and maintain that part of the watercourse within the property reasonably free of trash, debris, excessive vegetation, and other obstacles which would pollute, contaminate, or significantly retard the flow of water through the

watercourse; shall maintain existing privately-owned structures within or adjacent to a watercourse, so that such structures will not become a hazard to the use, function, or physical integrity of the watercourse; and shall not remove healthy bank vegetation beyond that actually necessary for said maintenance, nor remove said vegetation in such a manner as to increase the vulnerability of the watercourse to erosion.

No person shall commit or cause to be committed any of the following acts, unless a written authorization has first been obtained from the City Manager or designee:

1. Discharge into or connect any pipe or channel to a watercourse;
2. Modify the natural flow of water in a watercourse;
3. Carry out development within thirty feet (30') of the center line of any creek or twenty feet (20') of the top of a bank;
4. Deposit in, plant in, or remove any material from a watercourse including its banks, except as required for necessary maintenance;
5. Construct, alert, enlarge, connect to, change, or remove any structure in a watercourse; or
6. Place any loose or unconsolidated material along the side of or within a watercourse, or so close to the side as to cause a diversion of the flow, or to cause a probability of such material being carried away by storm waters passing through such watercourse.

This side intentionally left blank.

3.0 Methods

3.1 Background Research

Prior to the field surveys, aerial photographs, natural resource database accounts, and other relevant scientific literature were reviewed. This included searching the USFWS *Information for Planning and Consultation* tool (USFWS 2025a), USFWS *National Wetland Inventory* (USFWS 2025b), CDFW *California Natural Diversity Database* (CDFW 2025a), and California Native Plant Society (CNPS) *Inventory of Rare and Endangered Plants* (CNPS 2025a) to identify special-status plants, wildlife, and habitats known to occur in the vicinity of the project site. Special-status species in this report are those listed as Endangered, Threatened, or Rare, or as Candidates for listing by the USFWS and/or CDFW; as Species of Special Concern or Fully Protected species by the CDFW; or as Rare Plant Rank 1B or 2B species by the CNPS.

3.2 Field Survey

EMC Planning Group biologist Rose Ashbach and Terracon biologist Brett Bell conducted a biological field survey at the project boundary and vicinity on March 17, 2025. All species observed were recorded in field notes, along with information on plant communities and wildlife habitats. Qualitative observations of plant cover, structure, and species composition were used to determine plant communities and wildlife habitats. Plant species were identified in the field or collected for subsequent identification. Searches for reptiles and amphibians were performed by overturning and then replacing rocks and debris, as well as assessment of potentially suitable habitat areas found on the site. Birds were identified by visual and/or auditory recognition; mammals were identified by diagnostic signs (including scat and tracks).

This side intentionally left blank.

4.0 Existing Biological Conditions

The proposed project is located on the Hayward U.S. Geological Survey (USGS) 7.5-minute quadrangle (USGS 2025). The project area is generally flat, with moderate bank slopes that descend to their lowest elevation near the center of the site at San Leandro Creek. Elevation at the top of the bank is approximately 22 meters, while the creek itself lies at about 13 meters.

The vegetation along the San Leandro creek is best categorized as nonnative riparian vegetation and disturbed slopes. On the Cary Avenue side, no mature vegetation is present. The slopes were recently planted with riparian tree saplings and erosion control blankets and wattles were installed on the banks. The Haas Avenue side is dominated by non-native invasive species. Small patches of emergent wetland vegetation are also present along portions of San Leandro Creek. Habitats found within the project site are shown on Figure 4-1, Habitat Map.

4.1 Plant Communities

Developed

Disturbed/developed land is located outside of the project boundary and consists of residential development and ornamental landscaping.

Ruderal

The Middle School property that will be used for staging includes compacted gravel soil surrounded by the school to the east, Cary Avenue to the west, San Leandro riparian banks and Creek to the south, and residential to the north. The vegetation within this area includes ripgut brome (*Bromus diandrus*), scarlet pimpernel (*Anagallis arvensis*), Cranes bill (*Erodium* sp.), bur clover (*Medicago polymorpha*), English ivy (*Hedera helix*), Bermuda buttercup (*Oxalis pes-caprae*), cheese weed (M*alva* sp.), blue gum eucalyptus (*Eucalyptus globulus*) (Photo 1, Figure 1-3, Site Photographs).

Non-Native Invasive Species

Invasive species dominate the Haas Avenue slope of the project area. Dominant species include English ivy, catchweed bedstraw (*Galium aparine*), Himalayan blackberry (*Rubus armeniacus*), Fumitory (*Fumaria officinalis*), ripgut brome, milk thistle (*Silybum marianum*), blue dawn flower (*Ipomoea indica*). Other species adjacent to the project site include toyon (*Heteromeles arbutifolia*), coast live oak (*Quercus agrifolia*), acacia (*Acacia* sp.), and nasturtium (*Tropaeolum* sp.) (Photo 2, Figure 1-3, Site Photographs).

Restored Restoration Slopes

The Cary Avenue bank slopes were dominated by many annual non-native species. This area was reduced in cover due to the recent restoration and erosion control activities that took place on this slope. Understory species found on these slopes include poison hemlock (*Conium maculatum*), English ivy, ripgut brome, catchweed bedstraw, cheeseweed, bur clover, miner's lettuce (*Claytonia perfoliata*), fiesta flower (*Pholistoma* sp.), scarlet pimpernel, Bermuda buttercup, lupine (*Lupinus* sp.), and cranes bill. Planted and existing restoration trees within and adjacent to the site included coast live oak, box elder (*Acer negundo*), willows (*Salix* sp.), buckeye (*Aesculus californica*), alder (*Anus* sp.), elderberry (S*ambucus* sp.) (Photo 3 and 4, Figure 1-3, Site Photographs).

Emergent Vegetation

Wetland vegetation within the site is limited to narrow strips of shallow water parallel to the creek. The vegetation that lines the banks of the San Leandro creek with emergent vegetation included smartweed (*Poligonum* sp.), tall flatsedge (*Cyperus eragrostis*), curly dock (*Rumex crispus*), nettle (*Urtica diotica*), and smilo grass (*Stipa miliacea*).

San Leandro Creek

The San Leandro Creek provides low quality habitat for aquatic plants and animals due to the changing flows, lack of emergent vegetation, and high cover of invasive species. Additionally, no open burrows that could provide upland cover were observed (Photo 5, Figure 1-3, Site Photographs).

4.2 Wildlife Habitats

Wildlife habitat quality of the project site is considered low due to the high levels of urbanization and cover of invasive species.

Terrestrial Wildlife Habitats. As described above, the project site consists of developed areas, invasive species, active restoration areas, emergent vegetation, and the San Leandro Creek. Although the creek is highly impacted by development, it provides a wildlife corridor, including green space and habitat throughout its course. Many bird species were observed or heard within the banks including: black phoebe (*Sayornis nigricans*), house finch (*Carpodacus mexicanus*), American goldfinch (*Spinus tristis*), American robin (*Turdus migratorius*), song sparrow (*Melospiza melodia*), brown creeper (*Certhia americana*), Anna's hummingbird (*Calypte anna*), Eurasian collard dove (*Streptopelia decaocto*), chestnut backed chickadee (*Poecile rufescens*), scrub jay (*Aphelocoma californica*), and American crow (*Corvus brachyrhynchos*).

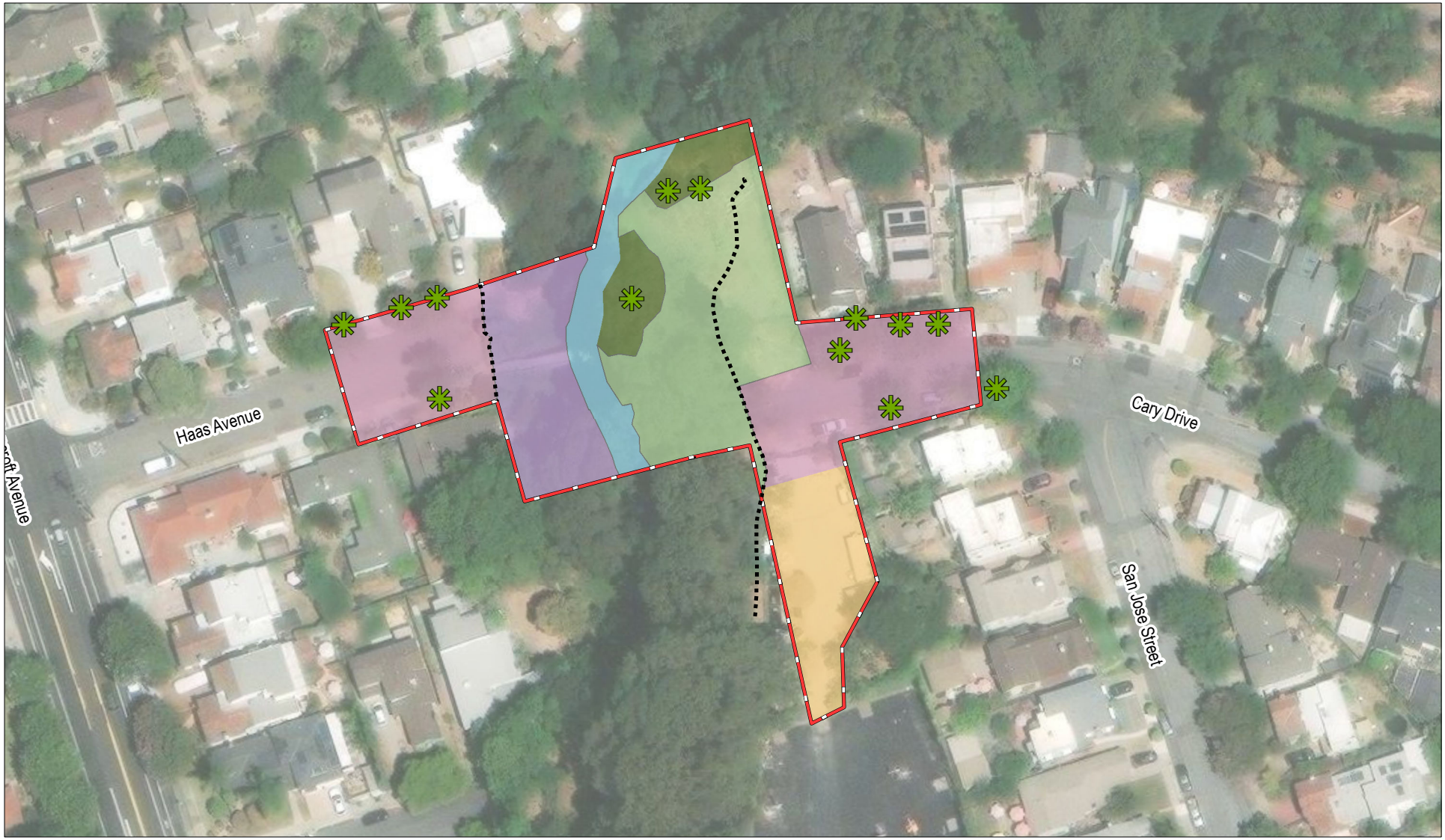

Source: ESRI 2025, Alameda County 2025

Figure 4-1

Habitat Map

Cary-Haas Pedestrian Bridge Replacement Project BRE

This side intentionally left blank.

Reptiles such as sharp-tailed snake (*Contia tenuis*) and southern alligator lizard (*Elgaria multicarinata*), may occur around the project site. Mammals potentially using the riparian habitats include raccoon (*Procyon lotor*), Virginia opossum (*Didelphis virginiana*), and deer mouse (*Peromyscus maniculatus*). Larger mammals with the potential to occur include mule deer (*Odocoileus hemionus*). Although no open burrows were observed, two loose soils piles were located at the top of bank area, likely make by Botta's pocket gopher (*Thomomys bottae*). Amphibians including the Pacific chorus frog (*Pseudacris regilla*), arboreal salamander (*Aneides lugubris*), and California slender salamander (*Batrachoseps attenuates*) are expected to occur within leaf litter and beneath fallen logs.

Aquatic Wildlife Habitats. The San Leandro Creek may provide breeding habitat for common species of amphibians such as Pacific tree frog (*Pseudacris regilla*).

4.3 Wetlands and Waterways

San Leandro Creek is found within the project site. The National Wetland Inventory classifies San Leandro Creek as a Riverine (R) system that is upper perennial (3) characterized by a high gradient, with an unconsolidated bottom (UB), that is permanently flooded (H). Although the creek is channeled and culverted in places, it is uncovered throughout most of its course.

This side intentionally left blank.

5.0 Special-Status Biological Resources

5.1 Overview

Special-status species in this report are those listed as Endangered, Threatened, or Rare, or as Candidates for listing by the USFWS or CDFW under the state and/or federal Endangered Species Acts. The special-status designation also includes CDFW Species of Special Concern and Fully Protected species, CNPS Rare Plant Rank 1B and 2B species, and other locally rare species that meet the criteria for listing as described in Section 15380 of CEQA Guidelines. Special-status species are generally rare, restricted in distribution, declining throughout their range, or have a critical, vulnerable stage in their life cycle that warrants monitoring.

A search of the CDFW *California Natural Diversity Database* was conducted for the Oakland East, Redwood Point, Newark, San Leandro, Las Trampas Ridge, Hayward, Oakland West, Hunters Point, and San Mateo USGS quadrangles in order to evaluate potentially occurring special-status plant and wildlife species in the project vicinity (CDFW 2025a, 2025b). Records of occurrence for special-status plants were reviewed for those same USGS quadrangles in the *CNPS Inventory of Rare and Endangered Plants* (CNPS 2025). The USFWS *Information for Planning and Consultation* portal was used to generate a threatened and endangered species list for the project vicinity (USFWS 2025a). Appendix A, Special-Status Species with Potential to Occur in Vicinity, show special-status species documented within the project vicinity, their listing status and suitable habitat description, and their potential to occur on the site. Figure 5-1, Special-Status Species within the Project Vicinity, shows locations of recorded observations within 3.1 miles of the Cary Hass Bridge Replacement Project. Discussion of special-status species with potential to occur on the site (or otherwise requiring special explanation) is included in the following sections.

A search of the U.S. Fish and Wildlife Service (USFWS) Critical Habitat for Threatened and Endangered Species database confirmed that the project site is not located within any designated Critical Habitat areas (USFWS 2025c).

5.2 Special-Status Plants

Special-status plant species potentially occurring in the project vicinity were evaluated for potential to occur on the project site. Information on special-status plants, including listing status, suitable habitat conditions, and potential to occur on the site is presented in Appendix A.

No special-status plant species were observed during the field surveys. However, the project site itself supports habitat characteristics that are consistent with those required by one special-status plant species:

- Congdon's tarplant (*Centromadia parryi* ssp. *congdonii*) is a CNPS Rare Plant Rank 1B annual herb that typically blooms May to November.

Species with habitat requirements that have similar to the conditions observed within the project area are discussed in greater detail below.

Congdon's Tarplant

Congdon's tarplant (*Centromadia parryi* ssp. *congdonii*) is a low-growing annual herb that typically blooms June to November, with peak blooming from late summer to early fall. It is found on a range of substrates and is tolerant of disturbed and ruderal (weedy) areas, often occurring in patches of non-native grassland. There are two CNDDB records of Congdon's tarplant within the three-mile project vicinity. Both observations are over sixty years old (Occurrence No. 22 and 59, CNDDB 2025). The disturbed habitat within the project site is not likely to support Congdon's tarplant due to the extensive dense invasive species cover and recent disturbance of the slopes, and compacted and graveled substrate of the stockpile area. Due to the lack of suitable habitat, Congdon's tarplant in not expected to occur within the project site.

5.3 Special-Status Wildlife

Special-status wildlife species known to occur in the broader project vicinity were evaluated for their potential presence within the project site. Appendix A provides detailed information on these species, including their regulatory status, habitat preferences, and an assessment of their likelihood to occur on site. Species with habitat requirements that have similar habitat requirements as the conditions observed within the project area are discussed in greater detail below.

Federally Listed Special-Status Wildlife

The following Federally-listed terrestrial wildlife species were analyzed due to similar habitat requirements as found within the project site.

- California red-legged frog (*Rana draytonii*), FESA threatened, CESA Species of Special Concern;
- Foothill yellow-legged frog (*Rana Boylii*), FESA threatened, CESA endangered;
- Northwestern pond turtle (*Clemmys marmorata marmorata*), FESA proposed threatened, CESA Species of Special Concern;
- Steelhead (*Oncorhynchus mykiss irideus*), FESA threatened; and
- Nesting birds and raptors.

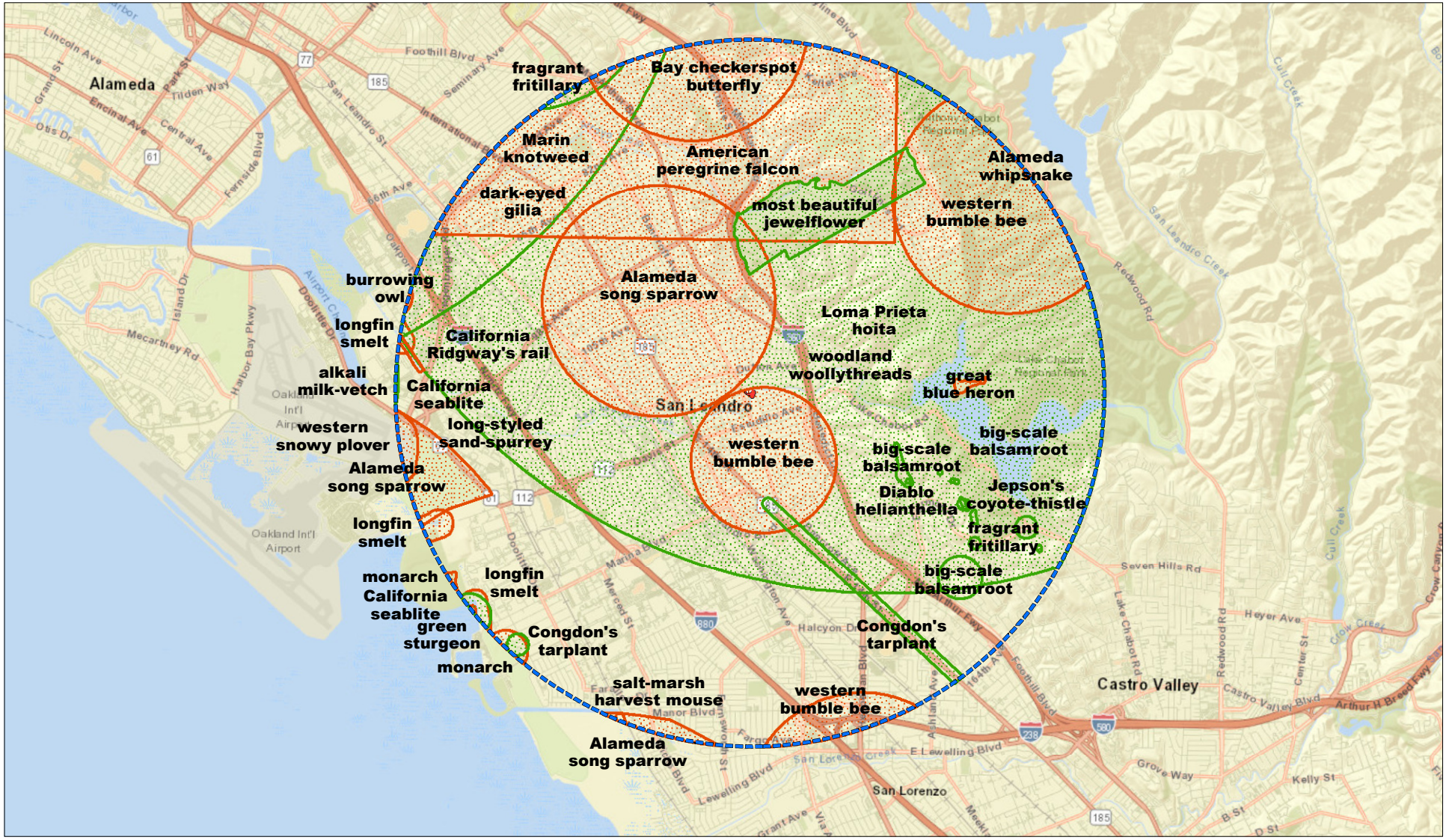

0 6,500 feet

Approximate Project Boundary
3-Mile Buffer
Special-Status Plants
Special-Status Wildlife

Source: ESRI 2025, Alameda County 2025, CDFW CNDDB 2025

Figure 5-1

Special-Status Species Within the Project Vicinity

Cary-Haas Pedestrian Bridge Replacement Project BRE

This side intentionally left blank.

California Red-legged Frog

California red-legged frog (*Rana draytonii*) was federally listed as Threatened on May 23, 1996 (61 Federal Register [FR] 25813-25833), and is a CDFW Species of Special Concern. Revised USFWS Critical Habitat for the California red-legged frog was designated on March 17, 2010 (75 FR 12816-12959).

California red-legged frog occur in areas that include suitable aquatic habitat, upland habitat, and barrier free dispersal between the two habitats (Allen et al. 2000). Specific breeding sites include streams, creeks, ponds, marshes, sag ponds, deep pools, backwater areas, dune ponds, stock ponds, lagoons, and estuaries. California red-legged frog prefer habitats with dense emergent wetland or shoreline riparian vegetation closely associated with fairly shallow (less than 0.5-meter) to deep (more than 0.5-meter), still or slow-moving water (USFWS 2002). California red-legged frog seems to prefer wetlands with riparian and emergent vegetation that includes willows (*Salix* spp.), cattails (*Typha* spp.), and bulrushes (*Schoenoplectus* spp.); however, this species can successfully breed in artificial ponds with little or no emergent vegetation. California red-legged frog prefer habitats that are free of invasive predators such as bullfrogs and predatory fish, or that have structural components that are large enough to allow them to avoid predation (USFWS 2002).

California red-legged frog generally breed between November and late April (USFWS 2002). After metamorphosis froglets will leave the natal pond to shallow water habitats with good cover. Migration to their breeding site will start in winter with the first heavy rains (Bulger et al. 2003). Males tend to stick around the breeding site, while females will leave once eggs are laid (Fellers et al. 2007)

Dispersal and migration of California red-legged frog varies based on site conditions and the behavioral differences between individual frogs. Some individuals may spend little time in a breeding pond before moving to upland habitat, while others will remain in breeding ponds until they have dried up (Fellers and Kleeman 2007). California red-legged frog typically disperse amongst breeding, upland, and nonbreeding aquatic habitats in straight-line movements regardless of vegetation or topography (Bulger et al. 2003). However, they have also been documented to disperse along waterways (Fellers and Kleeman 2007). California red-legged frog has been documented to disperse up to 2 miles from suitable breeding habitat, but is rarely found far from water (USFWS 2002).

CNDDB records indicate there are no known occurrences within 3.1 miles of the project site. The nearest documented observation is located approximately 7.6 miles northeast of the project site (Occurrence No. 1071, CNDDB 2025b). The project site lacks key breeding habitat features such as isolated pools and emergent vegetation suitable for egg-laying. Additionally, the surrounding high level of development and absence of recent observations further reduce the likelihood of California red-legged frog presence. Therefore, California red-legged frog is not expected to occur within the project site.

Foothill Yellow Legged Frog

Foothill yellow-legged frog (*Rana boylii*) occurrences in California consist of six geographically and genetically distinct population segments (DPS). The Central Coast DPS was listed as a federally-threatened species in 2023 and state-endangered species in 2019. Foothill yellow-legged frog is a small to medium sized frog with rough, mottled gray to brown skin. It is found in foothill and mountain streams from the pacific coast to the western slopes of the Sierra Nevada and Cascade Mountains. The foothill yellow-legged frog is dependent on shaded shallow streams and riffles with a rocky substrate in a variety of habitats and is rarely seen far from the water's edge. Foothill yellow-legged frog avoids muddy or polluted water. It breeds in It needs at least some cobble-sized substrate for egg-laying and at least 15 weeks to attain metamorphosis (USFWS 2025d). The project site is not located within federally designated critical habitat for this species (USFWS 2025c).

There are no CNDDB occurrences within 3.1 miles of the project site. The closest observation within the last 50 years is located 8.4 miles north of the project site (Occurrence No. 6, CNDDB 2025b). San Leandro Creek is a slow moving, clear watered stream. Due to the lack of rocky substrate within the project site, poor water quality, and the lack of observations within the project vicinity, foothill yellow-legged frog is not expected to occur within the project site.

Northwestern Pond Turtle

Northwestern pond turtle is a federally proposed threatened species, and a California Species of Special Concern. It is uncommon to common in suitable aquatic habitat throughout California including freshwater marshes, stock ponds, lakes, rivers, and streams. This species is considered omnivorous, and forages on aquatic plant material, beetles and a variety of aquatic invertebrates as well as fishes, frogs, and even carrion. Pond turtles require basking sites such as partially submerged logs, rocks, mats of floating vegetation, or open mud banks. Turtles slip from basking sites to underwater retreats at the approach of humans or potential predators.

The nearest and most recent observation of this species was documented approximately 6.8 miles east of the project site within Bolinas Creek (Occurrence No. 201, CNDDB 2025b). Although aquatic habitat is found within the project site, lack of basking areas, poor water quality, absence of emergent vegetation and foraging resources, and lack of observations of the species within the project vicinity make the likelihood of northwestern pond turtle within the project site unlikely.

Nesting Migratory Birds and Raptors

Migratory and resident raptors and passerines, along with their nests, are protected under the California Fish and Game Code and the Migratory Bird Treaty Act. While individual bird species have varied life histories, their overlapping nesting seasons—typically from February through August, with peak activity occurring between April and July—and similar foraging behaviors allow for their collective consideration.

California Department of Fish and Wildlife (CDFW) Species of Special Concern, such as Cooper's hawk (*Accipiter cooperii*), have the potential to occur within the project area. Suitable nesting habitat for Cooper's hawk is present within the trees surrounding the project site.

The Migratory Bird Treaty Act protects all nesting birds, regardless of their conservation status. Common migratory and resident songbirds that may nest within the survey area include, but are not limited to, black phoebe, house finch, American goldfinch, American robin, song sparrow, brown creeper, Anna's hummingbird, chestnut-backed chickadee, scrub jay, and American crow. Raptors, such as the red-shouldered hawk, also have the potential to nest within riparian trees on or near the project site.

Additional Species Listed Under CESA

The following species listed as Species of Special Concern or candidate endangered species under CESA were analyzed due to similar habitat requirements as found within the project site:

- California red-legged frog (*Rana draytonii*), FESA threatened, CESA Species of Special Concern, (addressed above);
- Foothill yellow-legged frog (*Rana Boylii*), FESA threatened, CESA endangered (addressed above);
- Northwestern pond turtle (*Clemmys marmorata marmorata*), FESA proposed threatened, CESA Species of Special Concern (addressed above);
- Western bumblebee (*Bombus occidentalis*), CESA candidate endangered; and
- Special-status bats, CESA Species of Special Concern.

Western Bumble Bee

In 2019, the western bumble bee was identified as a candidate species for listing under the CESA. The listing process was temporarily halted due to a court challenge but was reinstated to candidate status in September 2022. Although not yet formally listed, species identified as "candidates" must be considered during CEQA analyses.

Formerly common throughout much of its range—from central California to southern British Columbia and west of the Sierra-Cascade ranges—western bumble bee populations have declined sharply since the late 1990s. These bees primarily nest in underground cavities, such as abandoned burrows or other animal nests, typically located on open west- to southwest-facing slopes. Their general habitat includes meadows and grasslands with abundant flowering plants, and they may also occur in some natural areas within urban environments (Xerces 2008).

Western bumble bees require continuous access to nectar- and pollen-producing plants that bloom throughout their flight period, which extends from as early as February to as late as November. Although they forage on a wide variety of flowering plants, their short tongues limit them to certain types. They are known to prefer plant families such as Fabaceae, Asteraceae, Rhamnaceae, and Rosaceae (Xerces 2008, Martin, et al. 2023).

The western bumble bee was once very common in the Bay Area. Although its current range is primarily within the Sierra Nevada, occasional observations have been recorded within its historic range, including in the vicinity of the project site. There are no recent observations of the western bumble bee in the project area according to iNaturalist or Bumble Bee Watch (Bumble Bee Watch 2025; iNaturalist 2025). However, one historical observation from 1985 was recorded near the project site on Elsie Avenue in San Leandro (Occurrence No. 221, CNDDB 2025b). In addition, seven male and one female western bumble bees were observed at Las Trampas Ridge in 1994, approximately 2.75 miles from the project site (Occurrence No. 286, CNDDB 2025b).

The disturbed invasive species cover and the active restoration area within the project site provide only low-quality foraging habitat, and the absence of suitable burrows makes the site poor nesting habitat for the western bumble bee. The proposed project would affect only a very small portion of the site, and the number of individuals likely to be displaced by habitat disturbance or loss is expected to be minimal. Due to the lack of evidence indicating a substantial presence of western bumble bees and the limited project footprint, project activities are not expected to result in significant impacts to breeding or foraging habitat.

Special-Status Bats

Of the 25 native bat species in California, 17 receive some level of state or federal protection (CDFW 2025e). Trees on or adjacent to the project site could provide roosting habitat for state-listed species of special concern hoary bat (*Lasiurus cinereus*). Hoary bat is a solitary species that generally prefers dense foliage of medium to large trees. Hoary bat has been identified as occurring within five miles to the north of the project site and six miles south of the project site (Occurrence No. 17 and 14, CNDDB 2025b). Although both of these observations were recorded more than 50 years ago, the species is presumed extant within the project vicinity.

5.4 Special-Status Natural Communities

Special-status natural communities are those that are considered rare in the region, support special-status plant or wildlife species, or receive regulatory protection (i.e., wetlands under Section 404 of the Clean Water Act and/or Section 1600 of the California Fish and Game Code). In addition, the CDFW has designated a number of natural communities as rare; these communities are given the highest inventory priority and are tracked in the CNDDB. Within the project site, invasive species dominate the western slopes and the eastern slopes are undergoing active restoration. The vegetation present is not classified as a special-status natural community.

5.5 Jurisdictional Wetlands and Waters

Wetlands and riparian habitats are considered jurisdictional by several regulatory agencies, including the USACE, CDFW, RWQCB, and USFWS. The role these various federal and state agencies play

in regulating wetlands and waters is discussed in the Regulatory Setting section of this report. Potentially jurisdictional waters included within the project site include San Leandro Creek. The creek is discussed below and shown on Figure 4-1, Habitat Map.

The extent of project impacts to potentially jurisdictional wetland features (including Waters of the U.S. and State) has not yet been determined. The project aims to design the replacement bridge above the ordinary high water mark and top of bank.

5.6 Wildlife Movement

Ensuring wildlife movement through a landscape, to enable the acquisition of resources for feeding, cover, and reproduction, has been recognized as critical for the survival of animal populations. Habitat "connectivity" is the ability of an individual or population to move between habitat patches that provide these resources (Hilty et al. 2019).

A species can undertake several types of movement events, which generally take place at different spatial and temporal scales at various life history stages. Daily movement can occur in the procurement of food and water, shelter, or other resource requirements. Seasonal movement, or "migration," generally occurs at a much larger spatial scale. Long distance juvenile dispersal or other colonization events might take place once in an individual's life, occurring only after a lapse of several generations. These various types of movement, along with species-specific differences, lead to numerous ways in which to measure a landscape's connectivity in terms of habitat needs.

The *California Essential Habitat Connectivity Project* provides a statewide wildlife habitat connectivity map using the Biogeographic Information and Observation System (CDFW 2025d). This system was queried to determine the presence or absence of wildlife corridors on the project site. The project site does not contain any Essential Habitat Connectivity as the project is surrounded by urban development. The riparian corridor along the San Leandro Creek likely provides a movement corridor for common local species as well as aquatic species within the inundated portion of the channel. The proposed project is being designed to minimize impacts to the creek and banks to the extent possible and impacts to migratory movements are expected to be minimal.

5.7 Regulated Trees

There will be no trees removed within the project site. The pedestrian bridge was damaged due to a falling eucalyptus tree. Since then, tree removal and restoration planting has taken place within the project area. No additional tree removal will take place.

This side intentionally left blank.

6.0 Impacts and Recommended Measures

Sensitive biological resources are expected to be impacted by the proposed project. Therefore, recommended avoidance/minimization measures are identified in this section to avoid or minimize potentially effects/impacts to biological resources due to the proposed project. These measures are all dependent on regulatory agency coordination and approval of associated permit conditions. Therefore, final minimization and avoidance measures along with compensatory mitigation requirements will be established in consultation and coordination with all involved regulatory agencies and other project permitting authorities.

6.1 General Avoidance/Minimization Measures

The following biological resources impact avoidance/minimization measures are proposed to protect special-status species. These measures include having qualified biologists conduct biological preconstruction surveys and monitoring, delineation of work area limits, and construction site measures/best management practices that prevent water pollution.

6.2 Special-Status Plants

Vegetation dominated by invasive species and the active restoration sites do not provide habitat for special-status plant species. The project will have no impact on special-status plants.

6.3 Special-Status Wildlife

The proposed project may impact special-status wildlife species, including nesting birds and raptors and hoary bat. These species are known to occur or have potential to occur within or immediately adjacent to the project area. If these species are present in the project area, project development could result in direct loss of individuals or harassment which is considered "take". Therefore, implementation of the following measures is recommended to reduce potential impacts to these species.

Avoidance/Minimization Measure for Nesting Birds

Native birds protected under the federal Migratory Bird Treaty Act may be present on the project site and may nest on and adjacent to the project site, especially in the riparian woodland canopy. If protected species are nesting on or adjacent to the project site during the nesting bird season

(February 1 to August 31), then construction activities could result in the loss of fertile eggs or nestlings, or otherwise lead to the abandonment of active nests. The following measure may be incorporated into project plans or as a condition of approval to avoid, minimize or mitigate potential impacts to nesting migratory birds and birds of prey and to ensure enforcement with the Migratory Bird Treaty Act.

BIO-1 Protected Nesting Birds. To avoid impacts to nesting birds during the nesting season (January 15 through September 15), all construction activities should be conducted between September 16 and January 14, which is outside of the bird nesting season. If construction occurs during the bird nesting season, then a qualified biologist should conduct a pre-construction survey for nesting birds to ensure that no nests would be disturbed during project construction.

If project-related work is scheduled during the nesting season (February 15 to August 30 for small bird species such as passerines; January 15 to September 15 for owls; and February 15 to September 15 for other raptors), a qualified biologist should conduct nesting bird surveys.

a. Two surveys for active bird nests should occur within 14 days prior to start of construction, with the final survey conducted within 48 hours prior to construction. Appropriate minimum survey radii surrounding each work area are typically 250 feet for passerines, 500 feet for smaller raptors, and 1,000 feet for larger raptors. Surveys should be conducted at the appropriate times of day to observe nesting activities. Locations off the site to which access is not available may be surveyed from within the site or from public areas. If no nesting birds are found, a letter report confirming absence should be prepared and submitted to Alameda County and no further mitigation is required.

b. If the qualified biologist documents active nests within the project site or in nearby surrounding areas, an appropriate buffer between each nest and active construction should be established. The buffer should be clearly marked and maintained until the young have fledged and are foraging independently. Prior to construction, the qualified biologist should conduct baseline monitoring of each nest to characterize "normal" bird behavior and establish a buffer distance, which allows the birds to exhibit normal behavior. The qualified biologist should monitor the nesting birds daily during construction activities and increase the buffer if birds show signs of unusual or distressed behavior (e.g., defensive flights and vocalizations, standing up from a brooding position, and/or flying away from the nest). If buffer establishment is not possible, the qualified biologist or construction foreman should have the authority to cease all

construction work in the area until the young have fledged and the nest is no longer active. Once the absence of nesting birds has been confirmed, a letter report should be prepared and submitted to Alameda County.

Avoidance/Minimization Measure for Special-Status Bats

Trees and/or buildings or structures on or adjacent to the project site could provide roosting habitat for state-listed species of special concern hoary bat (*Lasiurus cinereus*). Tree removal (if required) and construction activities at the project site could result in the disturbance of roost and natal sites occupied by hoary bats on or adjacent to the project site, if present. To avoid impacts to roosting special-status bats, the following measure is recommended:

BIO-2 Special-Status Bats. Approximately 14 days prior to construction activities, a qualified biologist should conduct a habitat assessment for bats and potential roosting sites in trees within 50 feet of the development footprint, and within and surrounding any structures that may be disturbed by the project. These surveys should include a visual inspection of potential roosting features (bats need not be present) and a search for presence of guano within the project site, construction access routes, and 50 feet around these areas. Cavities, crevices, exfoliating bark, and bark fissures that could provide suitable potential nest or roost habitat for bats should be surveyed. Assumptions can be made on what species is present due to observed visual characteristics along with habitat use, or the bats can be identified to the species level with the use of a bat echolocation detector such as an "Anabat" unit. Potential roosting features found during the survey should be flagged or marked.

If no roosting sites or bats are found, a letter report confirming absence should be prepared and no further mitigation is required.

If bats or roosting sites are found, a letter report and supplemental documents should be prepared prior to grading permit issuance and the following monitoring, exclusion, and habitat replacement measures should be implemented:

a. If bats are found roosting outside of the nursery season (May 1 through October 1), they should be evicted as described under (b) below. If bats are found roosting during the nursery season, they should be monitored to determine if the roost site is a maternal roost. This could occur by either visual inspection of the roost bat pups, if possible, or by monitoring the roost after the adults leave for the night to listen for bat pups. If the roost is determined to not be a maternal roost, then the bats should be evicted as described under (b) below. Because bat pups cannot leave the roost until they are mature enough, eviction of a maternal roost cannot occur during the nursery season. Therefore, if a maternal roost is present, a 50-foot buffer zone (or different size if determined in consultation with the California

Department of Fish and Wildlife) should be established around the roosting site within which no construction activities including tree removal or structure disturbance should occur until after the nursery season.

b. If a non-breeding bat hibernaculum is found in a tree or snag scheduled for removal or on any structures scheduled to be disturbed by project activities, the individuals should be safely evicted, under the direction of a qualified bat biologist. If pre-construction surveys determine that there are bats present in any trees to be removed, exclusion structures (e.g., one-way doors or similar methods) should be installed by a qualified biologist. The exclusion structures should not be placed until the time of year in which young are able to fly, outside of the nursery season. Information on placement of exclusion structures should be provided to the California Department of Fish and Wildlife prior to construction.

6.4 Special-Status Natural Communities

Vegetation communities within the project area include areas dominated by invasive species and an active restoration site. There are no special-status natural communities present within the project site, and the project will have no effect on any special-status natural communities.

6.5 Jurisdictional Wetlands and Waters

Impacts to potentially jurisdictional wetlands and waters may occur as a result of project implementation. The project aims to avoid any disturbance below the ordinary high water mark or top of bank. Consultation with the U.S. Army Corps of Engineers for a Clean Water Act Section 404 Nationwide Permit is not anticipated, as no impacts below the ordinary high water mark would occur. The proposed project has been designed to avoid riparian vegetation and permitting through the CDFW Lake and Streambed Alteration Program is not anticipated to be required. However, current site plans include work associated with the bridge abutments just below the top of bank, and consultation with the RWQCB should be initiated once the extent of impacts can be identified.

Avoidance/Minimization Measure for Jurisdictional Wetlands and Waters

The proposed project is being designed to avoid disturbance of federally jurisdictional wetlands and waters or riparian vegetation. If impacts may occur, the following measures are recommended:

BIO-3 Delineation of Wetlands/Waterways. Prior to issuance of a grading permit within the project boundary, the applicant should retain a qualified biologist to determine the extent of potential wetlands and waterways regulated by the United States Army Corps of Engineers (USACE), Regional Water Quality Control Board (RWQCB), and California Department of Fish and Wildlife (CDFW). The design analyzed during preparation of this biological resource evaluation will not result in impacts within the ordinary high

water mark or to riparian vegetation and permits from the USACE or CDFW are not anticipated to be required. The applicant should coordinate with the RWQCB to obtain authorization under the Waste Discharge Requirements Program.

BIO-4 Stormwater Pollution Prevention Plan. A Storm Water Pollution Prevention plan (SWPPP) should be prepared to prevent toxins and soil from entering local water bodies. SWPPP measures should include secondary containment of portable gas cans and generators, all stationary equipment that could leak oil, and of concrete washouts.

Compliance with the SWPPP should be documented prior to construction and submitted to the County of Alameda. Compliance with this measure should be included in construction documents and implemented throughout construction of the proposed project.

6.6 Wildlife Movement Corridors

The project is not expected to impede wildlife movement corridors or to have significant long-term impacts on wildlife movement.

This side intentionally left blank.

7.0 Report Preparers and Sources

7.1 Report Preparers

Rose Ashbach, MS
Associate Biologist

Janet Walther, MS
Principal Biologist

Teri Wissler Adam
Senior Principal

7.2 Sources

Alameda County. Alameda County Code of Ordinances. Supplement 109. Passed January 7, 2025

Allen M, Tennant T. 2000. *Evaluation of Critical Habitat for the California red-legged frog (Rana aurora draytonii*). Center for Conservation Biology, University of California Riverside.

Baldwin B. et al. 2012. *The Jepson Manual: Vascular Plants of California. Second Edition*. University of California Press, Berkeley, CA.

Bulger J, Scott N, and Seymour R. 2003. *Terrestrial activity and conservation of adult California red-legged frogs (Rana aurora draytonii) in coastal forests and grasslands*. Biological Conservation 110:85-95.

Bumble Bee Watch. 2025. Observation search for *Bombus occidentalis* in California. Accessed April 2025. https://www.bumblebeewatch.org/maps/?type=1-2&project=&user=&status=2&month=&year=&sex=&species=28&county=&state=18&page=1

Calflora Database. 2025. *Calflora: Information on California plants for education, research and conservation online database*. Berkeley, California. Accessed January 2024. https://www.calflora.org/

California Department of Fish and Wildlife (CDFW). 2024a. *California Natural Diversity Database (CNDDB)* online database. Records of occurrence for Oakland East, Redwood Point, Newark, San Leandro, Las Trampas Ridge, Hayward, Oakland West, Hunters Point, San Mateo USGS quadrangles. Sacramento, California. Accessed April 2025. https://wildlife.ca.gov/data/cnddb

CDFW. 2025b. *Biogeographic Information and Observation System (BIOS)* online database. Sacramento, California. Accessed January 2024. http://bios.dfg.ca.gov

CDFW. 2024c. *California Natural Community List*. Sacramento, California. Accessed January 2024. https://wildlife.ca.gov/Data/VegCAMP/Natural-Communities

CDFW. 2024d. *California Essential Habitat Connectivity Project*. Sacramento, California. Accessed April 2025. https://www.arcgis.com/apps/mapviewer/index.html?layers=24acc916a92048e5b27e7e1a4ce31fcf

CDFW. 2025e. Special Animal List. Accessed April 2025. https://nrm.dfg.ca.gov/FileHandler.ashx?DocumentID=109406&inline

CDFW. 2018a. *Protocols for Surveying and Evaluating Impacts to Special-Status Native Plant Populations and Sensitive Natural Communities*. Sacramento, California. https://nrm.dfg.ca.gov/FileHandler.ashx?DocumentID=18959&inline

California Invasive Plant Council (Cal-IPC). 2023. *Cal-IPC Invasive Plant Inventory* online database. Accessed November 2023. https://www.cal-ipc.org/plants/inventory/

California Native Plant Society (CNPS). 2001. CNPS Botanical Survey Guidelines. Sacramento, California. https://www.cnps.org/plant-science/field-protocols-guidelines

California Native Plant Society (CNPS). 2023. *Inventory of Rare and Endangered Plants of California online database.* Records of occurrence for San Felipe, Chittenden, Watsonville East, Salinas, Natividad, Mt. Harlan, Prunedale, San Juan Bautista, and Hollister USGS quadrangles. Sacramento, California. Accessed December 2023. http://www.rareplants.cnps.org

City of San Leandro. San Leandro Municipal Code.

Climate Data 2025. San Leandro Climate. April 2025. https://en.climate-data.org/north-america/united-states-of-america/california/san-leandro-16195/

CNPS. 2024. *Manual of California Vegetation*. Assessed April 2025. https://www.cnps.org/vegetation/manual-of-california-vegetation

Fellers G, and Kleeman P. 2007. *California Red-legged Frog (Rana draytonii) Movement and Habitat Use: Implications for Conservation.* Journal of Herpetology. Vol. 41 (2), pp. 276-286.

Hilty J, Keeley A, Lidicker W, Merenlender A. 2019. *Corridor Ecology*. Second Edition. Island Press. Washington D.C.

iNaturalist. 2025. *Observations San Leandro, CA*. Online database. Accessed April 2025. https://www.inaturalist.org/observations

Jepson Flora Project. 2025. *Jepson eFlora* online database. Accessed April 2025. https://ucjeps.berkeley.edu/eflora/

Martin M & Azerrad J. 2023. *Management recommendations for Washington's priority Species: Western Bumble Bee*. Washington Department of Fish and Wildlife, Olympia, Washington.

NOAA. 2025. NOAA Online Weather Data. Accessed April 2025. https://www.weather.gov/wrh/Climate?wfo=mtr

Sibley, David A. 2016. *The Sibley Field Guide to Birds of Western North America: Second Edition*. New York, Alfred A. Knopf.

U.S. Fish and Wildlife Service (USFWS). 2025a. *Information for Planning and Consultation* online database. Species list for San Leandro, CA. Washington, D.C. Accessed April 2025. http://www.fws.gov/endangered

USFWS. 2025b. *National Wetlands Inventory* online database. Washington, D.C. Accessed April 2025. http://www.fws.gov/wetlands/

USFWS. 2025c. *Critical Habitat for Threatened and Endangered Species* online mapper. Accessed April 2025. https://fws.maps.arcgis.com/home/webmap/viewer.html?webmap=9d8de5e265ad4fe09893cf75b8dbfb77

USFWS. 2025d. Foothill Yellow Legged Frog. Accessed April 2025. https://www.fws.gov/species/foothill-yellow-legged-frog-rana-boylii

USFWS. 2002. *Recovery Plan for the California Red-legged Frog (Rana aurora draytonii*). U.S. Fish and Wildlife Service, Portland, Oregon.

USFWS. 2005. *Revised Guidance on Site Assessments and Field Surveys for the California Red-Legged Frog.*

Xerces 2008. *Status Review of Three Formerly Common Species of Bumble Bee in the Subgenus Bombus*. Xerces Society. Portland, Oregon.

Xerces. 2018. *A Petition to the California Fish and Game Commission. The Crotch bumble bee, Frankline bumble bee, Suckly cuckoo bumble bee, and western bumble bee as Endangered under the California Endangered Species Act*. Accessed April 2025. https://www.xerces.org/sites/default/files/2019-10/CESA-petition-Bombus-Oct2018.pdf

Xerces. 2023. *Strategy to Protect State and Federally Recognized Bumble Bee Species of Conservation Concern*. Accessed April 2025. https://www.xerces.org/sites/default/files/publications/22-035_01_0.pdf

This side intentionally left blank.

Special-Status Species with the Potential to Occur in the Project Vicinity

A

APPENDIX

Appendix A Special-Status Plant Species with the Potential to Occur in the Project Vicinity

Species	Status (Federal/State/ CNPS)	Suitable Habitat Description	Potential to Occur on the Project Site
Adobe sanicle (*Sanicula maritima*)	--/--/1B.1	Meadows and seeps, valley and foothill grassland, chaparral, coastal prairie; moist clay or ultramafic soils; elevation 15-215 m. Blooming Period: February-May.	Unlikely. No meadow and seeps in grasslands, chaparral, coastal prairie in clay or ultramafic soils present.
Alkali milk-vetch *(Astragalus tener* var. *tener)*	--/--/1B.2	Alkaline sites in playas, valley and foothill grassland (on adobe clay), and vernal pools; elevation 1-60m. Blooming Period: March - June.	Unlikely. No alkaline sites in playas, grasslands, or vernal pools.
Arcuate bush-mallow *(Malacothamnus arcuatus)*	--/--/1B.2	Chaparral, in gravelly alluvium; elevation 80-355m. Blooming Period: April - September.	Unlikely. No chaparral present.
Beach layia *(Layia carnosa)*	FE/SE/1B.1	Coastal dunes, hugely reduced in range along California's north coast dunes, on sparsely vegetated semi-stabilized dunes, usually behind foredunes; elevation 0-75m. Blooming Period: March - July.	Unlikely. No coastal dunes present.
Bent-flowered fiddleneck *(Amsinckia lunaris)*	--/--/1B.2	Coastal bluff scrub, cismontane woodland, and valley and foothill grassland, on decomposed shale soils; elevation 3-500m. Blooming Period: March - June.	Unlikely. No suitable coastal bluff scrub, cismontane woodlands, or grasslands present.
Big-scale balsamroot *(Balsamorhiza macrolepis)*	--/--/1B.2	Valley and foothill grassland, and cismontane woodland; sometimes on serpentine; elevation 35-1000m. Blooming Period: March - June	Unlikely. No grassland or cismontane woodlands present.
Blue coast gilia (*Gilia capitata* ssp. *chamissonis*)	--/--/1B.1	Coastal dunes, coastal scrub; elevation 3-200 m. Blooming Period: April-July	Unlikely. No coastal dune or coastal scrub present.
Bristly sedge *(Carex comosa)*	--/--/2B.1	Marshes and swamps, coastal prairie, valley and foothill grassland. Lake margins, wet places; site below sea level is on a Delta island. -5-1010 m.	Unlikely.
California seablite *(Suaeda californica)*	FE/--/1B.1	Marshes and swamps; margins of coastal salt marshes; elevation 0-5m. Blooming Period: July - October.	Unlikely. No coastal marshes present.
Chaparral ragwort *(Senecio aphanactis)*	--/--/2B.2	Cismontane woodland and coastal scrub. Prefers drying alkaline flats; elevation 20-575m. Blooming Period: January - April.	Unlikely. No cismontane woodland or coastal scrub habitat present.
Choris' popcorn-flower *(Plagiobothrys chorisianus* var. *chorisianus)*	--/--/1B.2	Chaparral, coastal scrub, coastal prairie, mesic sites; elevation 15-100m. Blooming Period: March - June.	Unlikely. No mesic sites in chaparral or coastal scrub present.
Coastal marsh milk-vetch (*Astragalus pycnostachyus var. pycnostachyus*)	--/--/1B.2	Coastal dunes,marshes and swamps, coastal scrub. Mesic sites in dunes or along streams or coastal salt marshes; elevation 0-155 m. Blooming Period: April - October.	Unlikely. No suitable habitat present.
Congdon's tarplant *(Centromadia parryi* spp. *congdonii)*	--/--/1B.1	Valley and foothill grassland (alkaline); elevation 1-230m. Known to occur on various substrates, and in disturbed and ruderal (weedy) areas. Blooming Period: June - November	Unlikely. No suitable grassland and disturbed habitat present.

Species	Status (Federal/State/ CNPS)	Suitable Habitat Description	Potential to Occur on the Project Site
Congested-headed hayfield tarplant *(Hemizonia congesta* ssp. *congesta)*	--/--/1B.2	Valley and foothill grassland. Grassy valleys and hills, often in fallow fields; sometimes along roadsides; elevation 5-520 m. Blooming Period: April-November.	Unlikely. No grassland habitat present.
Contra Costa goldfields *(Lasthenia conjugens)*	FE/--/1B.1	Wet areas in cismontane woodland, playas (alkaline), valley and foothill grassland, and vernal pools; elevation 0-470m. Blooming Period: March - June	Unlikely. No wet areas in woodlands, alkaline playas, grasslands or vernal pools present.
Crystal Springs lessingia *(Lessingia arachnoidea)*	--/--/1B.2	Coastal sage scrub, valley and foothill grassland, cismontane woodland. Grassy slopes on serpentine; sometimes on roadsides; elevation 90-200 m. Blooming Period: July-October.	Unlikely. No grassy slopes on serpentine; sometimes on roadsides in sage scrub, grasslands, or woodlands present.
Dark-eyed gilia *(Gilia millefoliata)*	--/--/1B.2	Coastal dunes; elevation 1-60 m. Blooming Period: April-July.	Unlikely. No coastal dunes present.
Diablo helianthella *(Helianthella castanea)*	--/--/1B.2	Broadleafed upland forest, chaparral, cismontane woodland, coastal scrub, riparian woodland, valley and foothill grassland. Usually in chaparral/oak woodland interface in rocky, azonal soils. Often in partial shade. 45-1070 m.	Unlikely. No broad-leafed upland forest, chaparral, woodland, coastal scrub, riparian woodland, valley and foothill grassland present. Outside of elevation range
Fountain thistle *(Cirsium fontinale* var. *fontinale)*	FE/SE/1B.1	Valley and foothill grassland, chaparral, cismontane woodland, meadows and seeps. Serpentine seeps and grassland; elevation 45-185 m. Blooming Period: May-October.	Unlikely. No suitable valley foothill grassland, chaparral cismontane woodland, or meadows, and seeps present.
Fragrant fritillary *(Fritillaria liliacea)*	--/--/1B.2	Coastal scrub, valley and foothill grassland, and coastal prairie. Often on serpentine; various soils reported though usually clay in grassland; elevation 3-410m. Blooming Period: February - April.	Unlikely. No suitable coastal scrub, grassland or coastal prairie habitat present.
Franciscan onion *(Allium peninsulare* var. *franciscanum)*	--/--/1B.2	Cismontane woodland, valley and foothill grassland. Clay soils; often on serpentine; sometimes on volcanics. Dry hillsides; elevation 5-320 m. Blooming Period: May-June.	Unlikely. No cismontane woodland or grasslands present.
Hairless popcorn flower *(Plagiobothrys glaber)*	--/--/1A	Meadows and seeps (alkaline), marshes and swamps (coastal salt); elevation 15-180m. Blooming Period: March - May	Unlikely. No meadows and seeps, or coastal salt marshes and swamps present.
Hillsborough chocolate lily *(Fritillaria biflora* var. *ineziana)*	--/--/1B.1	Cismontane woodland, valley and foothill grassland. Probably only on serpentine; most recent site is in serpentine grassland; elevation 90-170 m. Blooming Period: March-April.	Unlikely. No cismontane woodland, valley and foothill grasslands present.
Hoover's button-celery *(Eryngium aristulatum* var. *hooveri)*	--/--/1B.1	Vernal pools. Alkaline depressions, roadside ditches, and other wet places near the coast; elevation 5-45m. Blooming Period: July	Unlikely. No vernal pools present.
Jepson's coyote-thistle *(Eryngium jepsonii)*	--/--/1B.2	Vernal pools, valley and foothill grassland. Clay. 3-305 m.	Unlikely. No vernal pools in grasslands present.
Kellogg's horkelia *(Horkelia cuneata* ssp. *sericea)*	--/--/1B.1	Closed-cone coniferous forest, maritime chaparral, coastal scrub, sandy or gravelly openings; elevation 10-200m. Blooming Period: April - September.	Unlikely. No closed cone coniferous forest, maritime chaparral, or coastal scrub present.

Species	Status (Federal/State/ CNPS)	Suitable Habitat Description	Potential to Occur on the Project Site
Loma Prieta hoita *(Hoita strobilina)*	--/--/1B.1	Wet areas on serpentine substrate in chaparral, cismontane woodland, and riparian woodland; elevation 30-860m. Blooming Period: May - October	Unlikely. Not observed. No serpentine substrate. Degraded riparian woodland habitat. Many nonnatives, recent disturbance.
Long-styled sand-spurrey (*Spergularia macrotheca var. longistyla*)	--/--/1B.2	Marshes and swamps, meadows and seeps. Alkaline; elevation 0-220 m. Blooming Period: February - May.	Unlikely. No alkaline sites present.
Marin western flax *(Hesperolinon congestum)*	FT/ST/1B.1	Chaparral, valley and foothill grassland. In serpentine barrens and in serpentine grassland and chaparral; elevation 60-400 m. Blooming Period: April-July.	Unlikely. No chaparral or grasslands in serpentine barrens present.
Minute pocket moss *(Fissidens pauperculus)*	--/--/1B.2	North coast coniferous forest. Moss growing on damp soil along the coast; elevation 10-100m. Evergreen	Unlikely. No north coast coniferous forest present.
Most beautiful jewel-flower *(Streptanthus albidus* ssp. *peramoenus)*	--/--/1B.2	Chaparral, valley and foothill grassland, and cismontane woodland; serpentine outcrops, on ridges and slopes; elevation 120-730m. Blooming Period: April - June	Unlikely. No chaparral, grassland, or cismontane woodland within serpentine outcrops present.
Mt. Diablo fairy lantern *(Calochortus pulchellus)*	--/--/1B.2	Chaparral, cismontane woodland, riparian woodland, valley and foothill grassland. On wooded and brushy slopes; elevation 45-915 m.	Unlikely. Degraded riparian woodland habitat. Many nonnatives, recent disturbance.
Northern slender pondweed (*Stuckenia filiformis ssp. alpina*)	--/--/2B.2	Marshes and swamps. Shallow, clear water of lakes and drainage channels. 5-2325 m.	Unlikely. No disturbance to potential habitat.
Oregon meconella *(Meconella oregana)*	--/--/1B.1	Coastal prairie, coastal scrub. Open, moist places; elevation 250-500m. Blooming Period: March - April	Unlikely. No open, moist places in coastal prairie or coastal scrub present.
Oval-leaved viburnum *(Viburnum ellipticum)*	--/--/2B.3	Chaparral, cismontane woodland, lower montane coniferous forest; elevation 215-1400 m.	Unlikely. No chaparral, cismontane woodland, or lower coniferous forest present.
Pallid manzanita (Arctostaphylos pallida)	FT/SE/1B.1	Broadleafed upland forest, closed-cone coniferous forest, chaparral, cismontane woodland, coastal scrub. Grows on uplifted marine terraces on siliceous shale or thin chert. May require fire. 180-460 m.	Unlikely. No uplifted marine terraces on siliceous shale or chert in upland forest, closed cone coniferous forest, chaparral, or woodland present.
Point Reyes bird's-beak *(Chloropyron maritimum* ssp. *palustre)*	--/--/1B.2	Coastal salt marshes, usually with Salicornia, Distichlis, Jaumea, and Spartina; elevation 0-15m. Blooming Period: June - October.	Unlikely. No coastal salt marshes present.
Presidio clarkia (*Clarkia franciscana*)	FE/SE/1B.1	Coastal scrub, valley and foothill grassland. Serpentine outcrops in grassland or scrub; elevation 20-305 m. Blooming Period: May - July.	Unlikely. No serpentine outcrops in coastal scrub or valley and foothill grasslands present.
Robust spineflower *(Chorizanthe robusta* var. *robusta)*	FE/--/1B.1	Sandy or gravelly openings in cismontane woodland, coastal dunes, and coastal scrub; prefers sandy terraces and bluffs or loose sand; elevation 3-300m. Blooming Period: April - July.	Unlikely. No sandy or gravelly openings in cismontane woodland, coastal dunes, and coastal scrub present.
Rose leptosiphon *(Leptosiphon rosaceus)*	--/--/1B.1	Coastal bluff scrub; elevation 10-140 m. Blooming Period: April-July.	Unlikely. Coastal bluff scrub.

Species	Status (Federal/State/ CNPS)	Suitable Habitat Description	Potential to Occur on the Project Site
Saline clover *(Trifolium hydrophilum)*	--/--/1B.2	Marshes and swamps, valley and foothill grassland, and vernal pools. Prefers wet, alkaline sites; elevation 0-300m. Blooming Period: April - June.	Unlikely. No alkaline sites in grasslands and vernal pools present.
San Francisco Bay spineflower *(Chorizanthe cuspidata* var. *cuspidata)*	--/--/1B.2	Coastal bluff scrub, coastal dunes, coastal prairie, coastal scrub. Closely related to C. pungens. Sandy soil on terraces and slopes; elevation 2-550 m. Blooming Period: April-July.	Unlikely. No coastal bluff scrub, coastal dunes, coastal prairie, or coastal scrub present.
San Francisco collinsia *(Collinsia multicolor)*	--/--/1B.2	Serpentine sites in closed cone coniferous forest and coastal scrub. Prefers decomposed shale (mudstone) mixed with humus; elevation 30-250m. Blooming Period: March - May.	Unlikely. No serpentine sites in closed cone forest or coastal scrub present.
San Francisco owl's-clover *(Triphysaria floribunda)*	--/--/1B.2	Coastal prairie, coastal scrub, valley and foothill grassland. On serpentine and non-serpentine substrate (such as at Pt. Reyes); elevation 1-150 m. Blooming Period: April-June.	Unlikely. No coastal prairie, coastal scrub, or valley and foothill grassland present.
San Francisco popcornflower *(Plagiobothrys diffusus)*	--/SE/1B.1	Valley and foothill grassland, and coastal prairie. Historically from grassy slopes with marine influence; elevation 60-485m. Blooming Period: March - June.	Unlikely. No grassland or coastal prairie present.
San Joaquin spearscale *(Atriplex joaquinana)*	--/--/1B.2	Alkaline sites in chenopod scrub, meadows and seeps, playas, and valley and foothill grassland; elevation 1-320m. Blooming Period: April - October	Unlikely. No alkaline sites in chenopod scrub, meadows and seeps, playas or grasslands present.
San Mateo thorn-mint *(Acanthomintha duttonii)*	FE/SE/1B.1	Chaparral, valley and foothill grassland. Uncommon serpentinite vertisol clays; in relatively open areas; elevation 50-185 m. Blooming Period: April-June.	Unlikely. No open areas in chaparral or grassland habitats.
San Mateo woolly sunflower *(Eriophyllum latilobum)*	FE/SE/1B.1	Cismontane woodland, coastal scrub, lower montane coniferous forest. Often on roadcuts; found on and off of serpentine; elevation 30-610 m.	Unlikely. No woodland, coastal scrub, or coniferous forest present.
Santa Cruz tarplant *(Holocarpha macradenia)*	FT/SE/1B.1	Coastal prairie, coastal scrub, and valley and foothill grassland; often on clay or sandy soils; elevation 10-220m. Blooming Period: June - October.	Unlikely. No coastal prairie, coastal scrub, or valley and foothill grasslands present.
Short-leaved evax *(Hesperevax sparsiflora* var. *brevifolia)*	--/--/1B.2	Coastal bluff scrub, coastal dunes, coastal prairie. Sandy bluffs and flats; elevation 0-640 m. Blooming Period: March-June.	Unlikely. No coastal bluff scrub, coastal dunes, or coastal prairie present.
Slender silver-moss *(Anomobryum julaceum)*	--/--/2B.2	Broadleaved upland forest, lower montane coniferous forest, North Coast coniferous forest, damp rocks and soil, usually seen on road cuts; elevation 100-1000m. Moss	Unlikely. No broadleaved upland forest, lower montane forest present.
Tiburon buckwheat (*Eriogonum luteolum var. caninum*)	--/--/1B.2	Chaparral, valley and foothill grassland, cismontane woodland, coastal prairie. Serpentine soils; sandy to gravelly sites; elevation 60-640 m. Blooming Period: May - September.	Unlikely. No chaparral, grasslands, woodlands, or coastal prairie present.
Water star-grass (*Heteranthera dubia*)	--/--/2B.2	Marshes and swamps. Alkaline, still or slow-moving water. Requires a pH of 7 or higher, usually in slightly eutrophic waters; elevation 15-1510 m. Blooming Period: July - August.	Unlikely. No alkaline water with pH above 7 present.

Species	Status (Federal/State/ CNPS)	Suitable Habitat Description	Potential to Occur on the Project Site
Western leatherwood *(Dirca occidentalis)*	--/--/1B.2	Broadleaf upland forest, chaparral, closed cone coniferous forest, cismontane woodland, North Coast coniferous forest, riparian forest, and riparian woodland. Found on brushy slopes, in mesic sites, mostly in mixed evergreen and foothill woodland communities; elevation 30-550m. Blooming Period: January - April.	Unlikely. Not observed. Degraded riparian woodland habitat. Many nonnatives, recent disturbance.
White-rayed pentachaeta *(Pentachaeta bellidiflora)*	FE/SE/1B.1	Valley and foothill grassland. Open dry, rocky slopes and grassy areas, often on soils derived from serpentine bedrock; elevation 35-620m. Blooming Period: March - May.	Unlikely. No rocky slopes in grassland areas present.
Woodland woollythreads *(Monolopia gracilens)*	--/--/1B.2	Serpentine, open sites in broadleaved upland forest, chaparral, cismontane woodland, North Coast coniferous forest, and valley and foothill grassland; elevation 100-1200m. Blooming Period: March - July.	Unlikely. No serpentine sites in broadleaved upland forest, chaparral, woodland or grasslands present.

SOURCE: CDFW 2025, CNPS 2025

NOTE: Status Codes:

Federal (USFWS)

FE: Listed as Endangered under the Federal Endangered Species Act.

FT: Listed as Threatened under the Federal Endangered Species Act.

FC: A Candidate for listing as Threatened or Endangered under the Federal Endangered Species Act.

FSC: Species of Special Concern.

FD: Delisted under the Federal Endangered Species Act.

State (CDFW)

SE: Listed as Endangered under the California Endangered Species Act.

ST: Listed as Threatened under the California Endangered Species Act.

SR: Listed as Rare under the California Endangered Species Act.

SC: A Candidate for listing as Threatened or Endangered under the California Endangered Species Act.

SSC: Species of Special Concern.

SFP: Fully Protected species under the California Fish and Game Code.

SD: Delisted under the California Endangered Species Act.

CNPS Rare Plant Ranks and Threat Code Extensions

1B: Plants that are considered Rare, Threatened, or Endangered in California and elsewhere.

2B: Plants that are considered Rare, Threatened, or Endangered in California, but more common elsewhere.

.1: Seriously endangered in California (over 80% of occurrences threatened/high degree and immediacy of threat).

.2: Fairly endangered in California (20-80% occurrences threatened).

.3: Not very endangered in California (<20% of occurrences threatened or no current threats known).

Appendix A Special-Status Wildlife Species with the Potential to Occur in the Project Vicinity

Species	Status (Federal/State)	Suitable Habitat Description	Potential to Occur on Project Site
Alameda Island Mole *(Scapanus latimanus parvus)*	--/SSC	Only known from Alameda Island. Found in a variety of habitats, especially annual and perennial grasslands. Prefers moist, friable soils. Avoids flooded soils.	Unlikely. Only known from Alameda Island.
Alameda song sparrow *(Melospiza melodia pusillula)*	--/SSC	Resident of salt marshes bordering south arm of San Francisco Bay. Inhabits *Salicornia* marshes; nests low in *Grindelia* bushes (high enough to escape high tides) and in *Salicornia*.	Unlikely. No salt marsh habitat present.
Alameda whipsnake *(Masticophis lateralis euryxanthus)*	FT/ST	Typically found in chaparral and scrub habitats, but will also use adjacent grassland, oak savannah, and woodland habitats. Found mostly on south-facing slopes and ravines with rock outcrops, deep crevices, or abundant rodent burrows.	Unlikely. No suitable chaparral or scrub habitat adjacent to grassland or riparian areas.
American badger *(Taxidea taxus)*	--/SSC	Most abundant in drier, open stages of most shrub, forest, and herbaceous habitats. Need sufficient food and open, uncultivated ground with friable soils to dig burrows. Prey on burrowing rodents.	Unlikely. No open stage shrub, forest, or grassland habitat. No burrows observed.
American peregrine falcon *(Falco peregrinus anatum)*	FD/SD, SFP	Occurs near wetlands, lakes, rivers, or other waters on cliffs, banks, dunes, mounds, and human-made structures. Nest consists of a scrape on a depression or ledge in an open site.	Unlikely. No suitable opens sites present.
Bank swallow *(Riparia riparia)*	--/ST	Highly colonial species that nests in alluvial soils along rivers, streams, lakes, and ocean coasts. Nesting colonies only occur in vertical banks or bluffs of friable soils at least one meter tall, suitable for burrowing with some predator deterrence values. Breeding colony present in Salinas River.	Unlikely. No vertical banks or bluffs of friable soil.
Bay checkerspot butterfly *(Euphydryas editha bayensis)*	FT/--	Restricted to native grasslands on outcrops of serpentine soil in the vicinity of San Francisco Bay. *Plantago erecta* is the primary host plant; *Castilleja densiflora* and *C. exserta* are secondary host plants.	Unlikely. No native grasslands with serpentine outcrops. No Plantago erecta, Castilleja densiflora or C. exserta.
Big free-tailed bat *(Euphydryas editha bayensis)*	--/SSC	Low-lying arid areas in Southern California. Need high cliffs or rocky outcrops for roosting sites. Feeds principally on large moths.	Unlikely. High cliffs or rocky outcrops for roosting.
Black skimmer *(Cypseloides niger)*	--/SSC	Nests on gravel bars, low islets, and sandy beaches, in unvegetated sites. Nesting colonies usually less than 200 pairs.	Unlikely. No unvegetated gravel bars, low inlets or sandy beaches.
Burrowing owl *(Athene cunicularia)*	--/SSC	Open, dry, annual or perennial grasslands, desert, or scrubland, with available small mammal burrows.	Unlikely. No open dry grassland or scrubland with small mammal burrows.
California black rail *(Laterallus jamaicensis coturniculus)*	--/ST	Inhabits freshwater marshes, wet meadows, and shallow margins of saltwater marshes bordering larger bays. Needs water depth of about 1 inch that does not fluctuate during the year and dense vegetation for nesting.	Unlikely. No freshwater marshes, wet meadows, or shallow margins of saltwater marshes bordering larger bays.
California least tern *(Sternula antillarum browni)*	FE/SE	Nests along the coast from San Francisco Bay south to northern Baja California. Colonial breeder on bare or sparsely vegetated, flat substrates (sand beaches, alkali flats, landfills, or paved areas).	Unlikely. No bare or sparsely vegetated, flat substrates (sand beaches, alkali flats, landfills, or paved areas).

Species	Status (Federal/State)	Suitable Habitat Description	Potential to Occur on Project Site
California red-legged frog *(Rana draytonii)*	FT/SSC	Rivers, creeks, and stock ponds with pools and overhanging vegetation. Requires dense, shrubby or emergent riparian vegetation, and prefers short riffles and pools with slow-moving, well-oxygenated water. Needs upland habitat to aestivate (remain dormant during dry months) in small mammal burrows, cracks in the soil, or moist leaf litter.	Unlikely. Poor foraging and breeding habitat. No observations within project vicinity. Project site lacks emergent vegetation.
California Ridgway's rail *(Rallus obsoletus obsoletus)*	FE/SE	Found in saltwater and brackish marshes, traversed by tidal sloughs in the vicinity of San Francisco Bay. Associated with abundant growths of pickleweed, but feeds away from cover on invertebrates from mud-bottomed sloughs.	Unlikely. No saltwater or brackish marshes.
California tiger salamander *(Ambystoma californiense)*	FT/ST	Grasslands and oak woodlands near seasonal pools and stock ponds in central and coastal California. Needs upland habitat to aestivate (remain dormant during dry months) in small mammal burrows, cracks in the soil, or moist leaf litter. Requires seasonal water sources that persist into late March for breeding habitat.	Unlikely. No seasonal breeding habitat present. No grassland habitat with burrows for aestivation.
Cooper's hawk *(Accipter cooperii)*	--/SSC	Oak or riparian woodlands.	Low probability. Marginal riparian woodlands outside of project site.
Crotch's bumble bee *(Bombus crotchii)*	--/CE	Coastal California east to the Sierra-Cascade crest and south into Mexico. Food plant genera include Antirrhinum, Phacelia, Clarkia, Dendromecon, Eschscholzia, and Eriogonum.	Unlikely. Suitable host plants are not found within the project site.
Foothill yellow-legged frog *(Rana boylii)*	--/SSC	Partly shaded, shallow streams and riffles with rocky substrate in a variety of habitats. Requires at least some cobble-sized substrate for egg-laying and 15 weeks of available water to attain metamorphosis.	Unlikely. No cobble sized substrate for breeding. Not known from project vicinity.
Hoary bat *(Lasiurus cinereus)*	--/SSC	Prefers open habitats or habitat mosaics, with access to trees for cover and open areas or habitat edges for feeding. Roosts in dense foliage of medium to large trees. Feeds primarily on moths. Requires water.	Low probability. Marginal roosting habitat outside of project site. However, trees adjacent to loud elementary school. No open water habitat present.
Longfin smelt *(Spirinchus thaleichthys)*	FC/SE	Euryhaline, nektonic and anadromous fish found in open waters of estuaries, mostly in middle or bottom of water column. Prefers salinities of 15-30 ppt, but can be found in completely freshwater to almost pure seawater.	Unlikely. No estuary habitat present.
Monarch butterfly *(Danaus plexippus)*	FC/--	Winter roost sites. Wind protected tree groves (Eucalyptus, Monterey pine, cypress) with nectar and water sources nearby.	Unlikely. Not a known overwintering population.
Myrtle's silverspot butterfly (*Speyeria zerene myrtleae*)	FE	Restricted to the foggy, coastal dunes/hills of the Point Reyes peninsula; extirpated from coastal San Mateo County.	Unlikely. Outside of known population range.
Northwestern pond turtle *(Clemmys marmorata marmorata)*	--/SSC	Associated with permanent or nearly permanent water in a wide variety of habitats. Requires basking sites. Nest sites may be found up to 0.5 km from water.	Unlikely. Although marginal habitat exists within the project site, no observation of NWPT have been make within the project vicinity.

Species	Status (Federal/State)	Suitable Habitat Description	Potential to Occur on Project Site
Pallid bat *(Antrozous pallidus)*	--/SSC	Deserts, grasslands, scrublands, woodlands, and forests. Most common in open, dry habitats with rocky areas for roosting. Roosts must protect bats from high temperatures.	Unlikely. No dry open habitats with rocky areas for roosting.
Saltmarsh common yellowthroat *(Geothlypis trichas sinuosa)*	--/SSC	Fresh and saltwater marshes; requires thick continuous cover down to water surface for foraging, tall grasses, tule patches, and willows for nesting.	Unlikely. No saltwater marsh present.
Salt-marsh harvest mouse *(Reithrodontomys raviventris)*	FE/SE	Found only in the saline emergent wetlands of San Francisco Bay and its tributaries. Pickleweed is the primariy habitat. Species does not burrow, but builds loosely organized nests. Requires higher areas for flood escape.	Unlikely. No saline emergent wetlands present.
Salt-marsh wandering shrew *(Sorex vagrans halicoetes)*	--/SSC	Salt marshes of the southern arm of San Francisco Bay. Found in medium high marsh, 6-8 feet above sea level where abundant driftwood is scattered among *Salicornia*.	Unlikely. No salt marshes present.
San Francisco dusky-footed woodrat *(Neotoma fuscipes annectens)*	--/SSC	Forest habitats of moderate canopy and moderate to dense understory. Constructs nest of shredded grass, leaves, and other materials.	Unlikely. Woody vegetation removed from project footprint.
Sharp-shinned hawk *(Accipiter striatus)*	--/SSC	Ponderosa pine, black oak, riparian deciduous, mixed conifer and Jeffrey pine habitats. Prefers riparian areas. North-facing slopes, with plucking perches are critical requirements. Nests ususally within 275 feet of water.	Unlikely. Require dense forest, ideally with a closed canopy for breeding. They favor forests with conifers.
Short-eared owl *(Asio flammeus)*	--/SSC	(Nesting) Found in swamp lands, both fresh and salt; lowland meadows; irrigated alfalfa fields. Tule patches/tall grass needed for nesting/daytime seclusion. Nests on dry ground in depression concealed in vegetation.	Unlikely. No swamp lands, lowland meadows, or irrigated alfalfa fields.
Steelhead *(Oncorhynchus mykiss irideus)*	FT/--	Coastal stream with clean spawning gravel. Requires cool water and pools. Needs migratory access between natal stream and ocean.	Possible. Steelhead are historically known from San Leandro Creek. No impacts from project
Tidewater goby *(Eucyclogobius newberryi)*	FE/SSC	Brackish water habitats, found in shallow lagoons and lower stream reaches, still but not stagnant water with high oxygen levels.	Unlikely. No brackish water habitats in shallow lagoons or lower stream reaches.
Townsend's big-eared bat *(Corynorhinus townsendii)*	--/SCT	Inhabits a wide variety of habitats. Most common in mesic sites. Roosts in the open, hanging from walls and ceilings. Roosting sites limiting. Extremely sensitive to human disturbance.	Unlikely. No cave analog environments for roosting.
Tricolored blackbird *(Agelaius tricolor)*	--/SE	Areas adjacent to open water with protected nesting substrate, which typically consists of dense, emergent freshwater marsh vegetation.	Unlikely. No dense emergent freshwater marsh vegetation.
Vernal pool fairy shrimp *(Branchinecta lynchi)*	FT/--	Endemic to the grasslands of the Central Valley, Central Coast Mtns., and South Coast Mtns. in astatic rain-filled pools. Inhabits small, clear-water sandstone depression pools and grass swale, earth slump, or basalt-flow depression pools.	Unlikely. No vernal pools present.

Species	Status (Federal/State)	Suitable Habitat Description	Potential to Occur on Project Site
Western bumble bee	--/SCT	Once common and widespread, species has declined precipitously from central CA to southern B.C., perhaps from disease.	Unlikely. Marginal foraging habitat and poor nesting habitat present. Due to the small size and infrequent occurrence data for this species within the project site, likelihood of finding this species in the project site is low to unlikely.
Western mastiff bat *(Eumops perotis californicus)*	--/SSC	Many open, semi-arid habitats, including conifer and deciduous woodlands, coastal scrub, grasslands, chaparral, etc. Roosts in crevices in cliff faces, high buildings, trees and tunnels.	Unlikely. No crevices in cliff faces, high buildings, trees, or tunnels.
Western snowy plover *(Charadrius alexandrinus nivosus)*	FT/SSC	Sandy beaches, salt pond levees, shores of large alkali lakes; sandy, gravelly, or friable soils for nesting.	Unlikely. No sandy beaches, salt pond leaves, or large alkali lakes present.
Yellow rail *(Corturnicops noveboracensis)*	--/SSC	Summer resident in eastern Sierra Nevadas, prefers freshwater marshlands.	Unlikely. No freshwater marshlands present.
Yellow warbler *(Xanthocephalus xanthocephalus)*	--/SSC	Riparian plant associations in close proximity to water. Also nests in montane shrubbery in open conifer forests in Cascades and Sierra Nevada. Frequently found nesting and foraging in willow shrubs and thickets, and in other riparian plants including cottonwoods, sycamores, ash, and alders.	Unlikely. No willow shrub thickets, cottonwoods, sycamores, ash within the project area.
Yellow-billed cuckoo *(Coccyzus americanus)*			Unlikely. No suitable riparian habitat present.

SOURCE: CDFW 2025, CNPS 2025

NOTE: Status Codes:

Federal (USFWS)

FE: Listed as Endangered under the Federal Endangered Species Act.

FT: Listed as Threatened under the Federal Endangered Species Act.

FC: A Candidate for listing as Threatened or Endangered under the Federal Endangered Species Act.

FSC: Species of Special Concern.

FD: Delisted under the Federal Endangered Species Act.

State (CDFW)

SE: Listed as Endangered under the California Endangered Species Act.

ST: Listed as Threatened under the California Endangered Species Act.

SR: Listed as Rare under the California Endangered Species Act.

SC: A Candidate for listing as Threatened or Endangered under the California Endangered Species Act.

SSC: Species of Special Concern.

SFP: Fully Protected species under the California Fish and Game Code.

SD: Delisted under the California Endangered Species Act.

CNPS Rare Plant Ranks and Threat Code Extensions

1B: Plants that are considered Rare, Threatened, or Endangered in California and elsewhere.

2B: Plants that are considered Rare, Threatened, or Endangered in California, but more common elsewhere.

.1: Seriously endangered in California (over 80% of occurrences threatened/high degree and immediacy of threat).

.2: Fairly endangered in California (20-80% occurrences threatened).

.3: Not very endangered in California (<20% of occurrences threatened or no current threats known).

Attachment 3: Wetland Delineation

Wetland Delineation

Cary-Haas

Pedestrian Bridge Replacement Project

July 31, 2025







Prepared by

EMC Planning Group

WETLAND DELINEATION

CARY-HAAS

PEDESTRIAN BRIDGE REPLACEMENT PROJECT

PREPARED FOR

MNS Engineers, Inc.
Shelah Riggs, Principal Regulatory Specialist
201 N. Calle Cesar Chaves, Suite 300
Santa Barbara, CA 93103
Tel 909.419.4268
sriggs@msnengineers.com

PREPARED BY

EMC Planning Group Inc.
601 Abrego Street
Monterey, CA 93940
Tel 831.649.1799
Fax 831.649.8399
Rose Ashbach, Associate Biologist
ashbach@emcplanning.com
www.emcplanning.com

July 31, 2025

This document was produced on recycled paper.



Table of Contents

EXECUTIVE SUMMARY ES-1

1.0 INTRODUCTION 1-1

1.1 Location 1-1

1.2 Project Description and Report Purpose 1-1

1.3 Land Use 1-2

1.4 Environmental Setting 1-2

1.5 Topography 1-7

1.6 Climate 1-8

2.0 REGULATORY BACKGROUND 2-1

2.1 Federal Clean Water Act 2-1

2.2 State, County, and Municipality 2-3

3.0 METHODS 3-1

3.1 Survey Methods 3-1

3.2 Preliminary Data Gathering 3-2

3.3 Hydric Soil Indicators 3-2

3.4 Wetland Hydrology Indicators 3-2

3.5 Hydrophytic Vegetation Indicators 3-3

3.6 Delineation Criteria 3-3

3.7 Field Methods 3-3

4.0 RESULTS 4-1

4.1 Soils 4-1

4.2 Hydrology 4-1

4.3 Vegetation 4-7

4.4 Waters of the United States 4-8

4.5 Regulatory Requirements 4-13

5.0 REFERENCES 5-1

Appendices

Appendix A Wetland Delineation Field Forms

Tables

Table ES-1 Potential Waters of the United States ES-2

Table 1-1 Contact Information 1-1

Table 4-1 Project Site Soils 4-1

Table 4-2 Potential Waters of the United States 4-8

Figures

Figure 1-1 Project Location 1-3

Figure 1-2 Site Map 1-5

Figure 1-3 USGS Topographic Map 1-9

Figure 4-1 NRCS Soils Map 4-3

Figure 4-2 National Wetlands Inventory Map 4-5

Figure 4-3 Potentially Jurisdictional Waters 4-9

Figure 4-4 Site Photographs 4-11

Executive Summary

EMC Planning Group conducted wetland assessment field surveys (wetland delineations) for potentially jurisdictional aquatic features at the Cary-Haas Pedestrian Bridge Replacement (project) in San Leandro, California.

The purpose of the assessment was to determine what on-site wetland/waterway features would potentially fall under the federal jurisdiction of the U.S. Army Corps of Engineers (USACE), state jurisdiction of the Regional Water Quality Control Board (RWQCB), and California Department of Fish and Wildlife (CDFW).

The Cary-Haas Pedestrian Bridge Replacement Project site is located between Cary Drive and Haas Avenue over San Leandro Creek in San Leandro, California. A wetland assessment survey was conducted on March 17, 2025, at which time vegetation, soils, and hydrology data were examined throughout the site.

Wetlands are defined in the Code of Federal Regulations, Section 328.3(b) as "areas that are inundated or saturated by surface or groundwater at a frequency and duration sufficient to support, and that under normal circumstances do support, a prevalence of vegetation typically adapted for life in saturated soil conditions." In the absence of excessive human disturbances or unusual or atypical circumstances, under the USACE wetland parameter criteria, an area must contain three primary hydrological characteristics to be considered a wetland:

- Hydrophytic vegetation;
- Hydric soils; and
- Wetland hydrology.

In the absence of adjacent wetland features, EMC Planning Group delineated the top of bank and ordinary high-water mark at the project site. San Leandro Creek is classified as a jurisdictional water of the United States, with approximately 0.08 acre located within the project area (Table ES-1).

Table ES-1 Potential Waters of the United States

Feature	Area/Length	Classification	Comments
San Leandro Creek	0.08 acres	Riverine System	Jurisdictional Waters of the US. Perennial Stream, OHWM.
Impacts	288 square feet	Slope	Jurisdictional Waters of the State, Slope below top of bank.

SOURCE: EMC Planning Group 2024

The proposed bridge will clear span San Leandro Creek and impacts to federally jurisdictional features are not anticipated. Approximately 288 square feet will be impacted below the top of bank. Because no impacts to waters of the United States are anticipated, the project will likely require a Waste Discharge Requirement (WDR) from the Regional Water Quality Control Board pursuant to the Porter-Cologne Water Quality Control Act.

Ultimately, the USACE has sole authority to determine the federal jurisdictional status of waters or wetlands on any given project site, and this document will be submitted to the agency for a jurisdictional determination. Regardless of the USACE determination of onsite jurisdiction, some or all of these delineated features may ultimately be considered jurisdictional by the RWQCB and/or CDFW.

1.0 Introduction

EMC Planning Group surveyed the Cary-Haas Bridge Replacement project site for potentially jurisdictional aquatic features. Contact information for the applicant and wetland consultant are included in Table 1-1, Contact Information. This report includes a discussion of the survey findings and provides a determination of whether the aquatic resources observed on the project site are considered jurisdictional and therefore subject to Section 404 of the Clean Water Act. However, the U.S. Army Corps of Engineers (USACE) has sole authority to determine the jurisdictional status of waters and wetlands on any given project site, and this document will be submitted to the agency for a jurisdictional determination.

Table 1-1 Contact Information

Applicant	Wetland Consultant
MSN Engineers ATTN: Shelah Riggs Senior Project Manager 201 N. Calle Cesar Chavez, Suite 300 Santa Barbara, CA 93103 Phone: (909) 419-4268 Email: sriggs@mnsengineers.com	EMC Planning Group Inc. ATTN: Rose Ashbach, M.S. Associate Biologist 601 Abrego Street Monterey, CA 93940 Phone: (831) 649-1799 Email: ashbach@emcplanning.com

1.1 Location

The Cary-Haas Pedestrian Bridge Replacement project is located over San Leandro Creek, connecting Cary Avenue and Haas Avenue between Bancroft Avenue and San Jose Street, San Leandro, California. Figure 1-1, Project Location, shows the City of San Leandro and the project location in the regional setting of north central Alameda County, between Interstate 580 and the 185. Figure 1-2, Aerial Photograph, details the project site location.

1.2 Project Description and Report Purpose

San Leandro Creek is a 21.7-mile-long perennial stream that runs from the hills above Oakland, in Alameda and Contra Costa Counties. There are two man-made reservoirs within the stream, Upper San Leandro Reservoir and Lake Chabot. Below the reservoirs it flows through the city of San Leandro and into San Leandro Bay and San Francisco Bay. Within the city of San Leandro, non-native species dominate the riparian corridor, reducing native species habitat.

In 2023, at least one large eucalyptus tree growing on the banks of the San Leandro Creek fell on the pedestrian bridge that provided access between Cary and Haas Avenues over San Leandro Creek. The bridge was removed in the summer 2024 and erosion control and restoration of the slopes was implemented.

The applicant, MSN Engineers, with the support of the City of San Leandro, is proposing to replace the pedestrian bridge by spanning banks of the San Leandro Creek. The engineers are proposing to design a bridge that has limited work below the top of bank. The project includes removal of old bridge footings, installation of new bridge abutments, pedestrian bridge replacements, ADA improvements to the existing sidewalk at the entrance to the bridge on Haas Avenue and the formalization of a concrete walkway connecting the existing concrete sidewalk on Cary Avenue to the entrance of the bridge.

The purpose of this aquatic delineation report is to identify potentially jurisdictional aquatic features and provide calculations of jurisdictional acreages within the project boundaries.

1.3 Land Use

The project site is located over San Leandro Creek, connecting Cary Avenue and Haas Avenue, between Bancroft Avenue and San Jose Street, within the City of San Leandro in Alameda County, California. Surrounding land uses include residential neighborhoods and the Bancroft Middle School campus.

1.4 Environmental Setting

The project site is located within the City of San Leandro on San Francisco Bay. This location is within the Bay Area/Delta Bioregion extending from the Pacific Ocean to the Sacramento Valley and encompasses all or part of 12 counties surrounding San Francisco Bay, including Marin, Contra Costa, Santa Clara, Alameda, Solano, San Mateo, San Francisco, Sonoma, Napa, San Joaquin, and parts of Sacramento, and Yolo. Major cities include San Francisco, Santa Rosa, Oakland, Berkeley, Vallejo, Concord, and San Jose.

The bioregion is named for its two major watersheds: San Francisco Bay and the Delta. Major rivers include the Russian, Gualala, Napa, Petaluma, and Alameda.

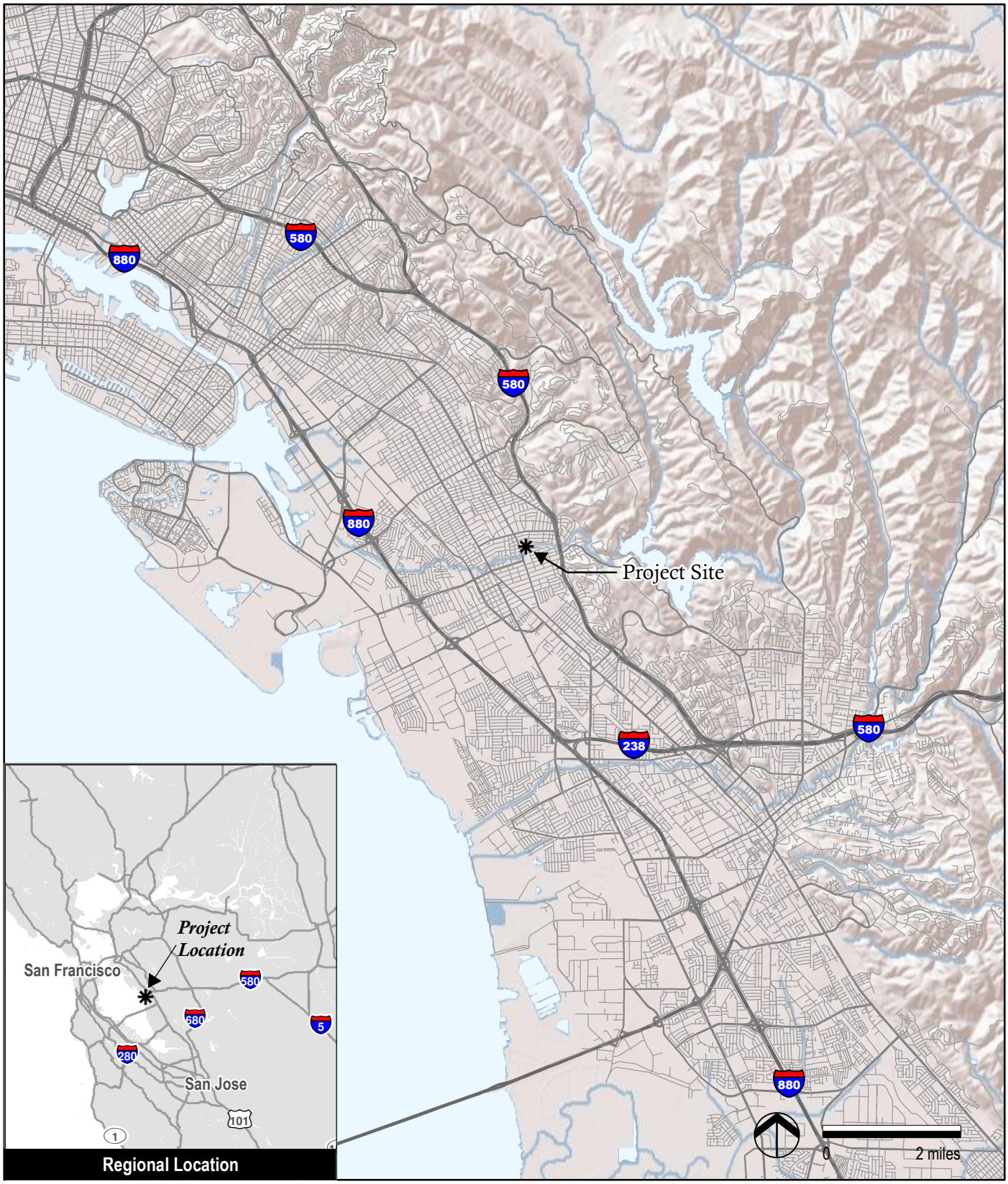

Source: ESRI 2025

Figure 1-1

Location Map

Cary-Haas Pedestrian Bridge Replacement Project Wetland Delineation

This side intentionally left blank.



0 80 feet

Approximate Project Boundary

Source: ESRI 2025, Alameda County 2025

Figure 1-2

Aerial Photograph

Cary-Haas Pedestrian Bridge Replacement Project Wetland Delineation

This side intentionally left blank.

The habitats and vegetation of the Bay Area/Delta Bioregion are as diverse as its geography. Coastal prairie scrub, mixed hardwood forests, and valley oaks are found throughout the rolling hills and mountains that descend toward the Pacific Ocean. Coastal salt marshes fringe the San Francisco Bay, while freshwater marshes are prevalent in the Delta region.

Wetlands in the Bay-Delta, both brackish and freshwater, provide critical resting, nesting, feeding, and breeding habitat for waterfowl migrating along the Pacific Flyway. These biologically rich marshes are important wintering grounds for many migratory bird species.

San Leandro Creek Watershed

The San Leandro Creek watershed encompass approximately 50 square miles and originates above Oakland and San Leandro as a network of small springs and tributaries. Many of these tributaries remain open and in their natural state before flowing into two large reservoirs, Upper San Leandro Reservoir and Lake Chabot. These reservoirs provide drinking water storage and regulate the flow of water in San Leandro Creek.

Prior to dam construction, San Leandro Creek provided habitat for anadromous fish species such as coho salmon (*Oncorhynchus kisutch*), chinook salmon (*Oncrhynchus tshawytscha*), and steelhead trout (*Oncorhynchus mykiss*). However, water quality degradation and sediment toxicity within the lower reaches of the creek has adversely affected invertebrate reproduction and decreased amphipod survival, leading to an overall reduction in prey for larger fish species. Within the upper reaches of the watershed, the creek supports native fish, including prickly sculpin (*Cottus asper*), Sacramento sucker (*Catostomus occidentalis*), and three-spined stickleback (*Gasterosteus aculeatus*). Notable wildlife in the upper watershed includes golden eagle (*Aquila chrysaetos*), Alameda striped racer (*Masticophis lateralis euryxanthus*), and California newt (*Taricha torosa*) (Alameda County Flood Control & Water Conservation District 2025).

1.5 Topography

The project site is situated within the city of San Leandro on the east side of San Francisco Bay. It has generally flat topography with urban, residential development. Project site elevations range from 22 meters above sea level at the top of bank to 13 meters above sea level at San Leandro Creek. Figure 1-3, USGS Topographic Map presents a topographic map of the site.

1.6 Climate

The San Francisco Bay Area experiences a Mediterranean climate with cool, wet winters and warm, dry summers. The Pacific Ocean has a moderating effect on temperatures, producing a maritime temperature regime with mild temperatures year-round. The Oakland Airport, which boarders San Leandro at the San Francisco Bay, receives an average of approximately 18 inches in annual precipitation (NOAA-NWS 2025), the majority of rainfall occurring between November and April.

The hottest month of the year in San Leandro is September, with an average high of 77°F and low of 55°F. The coldest month of the year is January, with an average low of 44°F and high of 63°F (Climate Data 2025).



Source: USGS Mosaic 2006

Figure 1-3

USGS Topographic Map

Cary-Haas Pedestrian Bridge Replacement Project Wetland Delineation

This side intentionally left blank.

2.0 Regulatory Background

2.1 Federal Clean Water Act

Section 404 of the Clean Water Act of 1972 regulates the discharge of dredge and fill material into "Waters of the U.S.". "Waters of the U.S." are waters such as oceans, rivers, streams, lakes, ponds, and wetlands subject to U.S. Army Corps of Engineers Regulatory Program jurisdiction under Section 404 of the Clean Water Act. Certain artificial drainage channels and wetlands have also been considered jurisdictional "Waters of the U.S."

The U.S. Environmental Protection Agency and the U.S. Army Corps of Engineers are in receipt of the U.S. Supreme Court's May 25, 2023, decision in the case of *Sackett v. Environmental Protection Agency*. On August 29, 2023, the U.S. Environmental Protection Agency and the U.S. Army Corps of Engineers issued a final ruling amending the regulatory definition of "waters of the United States" to conform with the *Sackett* decision.

The USACE determines the extent of its jurisdiction as defined by ordinary high-water marks on channel banks, wetland boundaries, and/or connectivity to a navigable water. Wetlands are habitats with soils that are intermittently or permanently saturated or inundated. The resulting anaerobic conditions naturally select for plant species known as hydrophytes that show a high degree of fidelity to such soils. Wetlands are identified by the presence of hydrophytic vegetation, hydric soils (soils intermittently or permanently saturated by water), and wetland hydrology according to methodologies outlined in the 1987 *Corps of Engineers Wetlands Delineation Manual* and the 2008 *Interim Regional Supplement to the Corps of Engineers Wetland Delineation Manual: Arid West Region (Version 2.0).*

Activities that involve the discharge of fill into jurisdictional wetlands or waters are subject to the permit requirements of the USACE. Discharge permits are typically issued on the condition that the project proponent agrees to provide compensatory mitigation which results in no net loss of area, function, or value, either through wetland creation, restoration, or the purchase of credits through an approved mitigation bank. In addition to individual discharge permits, the USACE also issues nationwide permits applicable for certain activities.

Pursuant to the USACE Manuals, key criteria for determining the presence of wetlands are:

- The presence of inundated or saturated soil conditions resulting from permanent or periodic inundation by ground water or surface water; and
- A prevalence of vegetation typically adapted for life in saturated soil conditions (hydrophytic vegetation).

Explicit in the definition is the consideration of three environmental parameters: hydrology, soil, and vegetation. Positive wetland indicators of all three parameters are normally present in wetlands. The assessment of all three parameters in normal circumstances enhances the technical accuracy, consistency, and credibility of a wetland determination and is required per the USACE Manuals.

Aquatic habitats other than wetlands that are considered to be Waters of the United States were also investigated as part of this study. Their landward extent was defined following the definitions provided in the USACE regulations [33 CFR 328.4(a), (b), and (c)]:

(a) **Territorial Seas**. The limit of jurisdiction in the territorial seas is measured from the baseline in a seaward direction a distance of three nautical miles.

(b) **Tidal Waters of the United States**. The landward limits of jurisdiction in tidal waters:

  (1) Extends to the high tide line; or

  (2) When adjacent non-tidal Waters of the United States are present, the jurisdiction extends to the limits identified in (c) below.

(c) **Non-Tidal Waters of the United States**. The limits of jurisdiction in non-tidal waters:

  (1) In the absence of adjacent wetlands, the jurisdiction extends to the ordinary high water mark (OHWM);

  (2) When adjacent wetlands are present, the jurisdiction extends beyond the ordinary high water mark to the limit of the adjacent wetlands; or

  (3) When the water of the United States consists only of wetlands, the jurisdiction extends to the limit of the wetlands.

Tributary waters and their impoundments are under the regulatory jurisdiction of the USACE and extend to the ordinary high water mark on opposing channel banks. Tributary waters include rivers, streams, and seasonal drainage channels. The ordinary high water mark is typically indicated by physical characteristics such as a clear, natural line impressed on the bank, shelving, changes in soil characteristics, destruction of vegetation, exposed roots on the bank, deposition of leaf litter and other debris materials, or lower limit of moss growth on channel banks.

Areas meeting the regulatory definition of "Waters of the United States" are subject to the jurisdiction of the USACE. The USACE is the agency responsible for regulating jurisdictional wetlands/waters and for administering Section 404 of the 1972 CWA. Jurisdictional waters may include all waters used or potentially used for interstate commerce. This includes all waters subject to the ebb and flow of the tide, all interstate waters, all other waters (intrastate lakes, rivers, streams, mudflats, sandflats, playa lakes, natural ponds, etc.), all impoundments of waters otherwise defined as jurisdictional waters, tributaries of waters otherwise defined as jurisdictional waters, the territorial seas, and wetlands adjacent to jurisdictional waters (33 CFR, Part 328, Section 328.3).

Areas not considered jurisdictional waters include non-tidal drainage and irrigation ditches excavated on dry land, artificially irrigated areas, artificial lakes or ponds used for irrigation or stock watering, small artificial water bodies such as swimming pools, and water-filled depressions (33 CFR, Part 328).

2.2 State, County, and Municipality

Regulation of land-use activities within wetlands may also occur at the state, county and local municipality level. Wetland regulations administered at the state, county, and local municipality level typically expand upon the scope of federal regulations. If regulations are in place at the state, county or local municipality level, they are generally written to be inclusive of wetlands that are not subject to federal regulations. An example is hydrologically-isolated wetlands, which includes wetlands not immediately adjacent to "Waters of the United States."

The State Water Resources Control Board and nine Regional Water Quality Control Boards (collectively, the Water Boards) are the primary regulatory authorities for protection of wetlands in California, although other agencies have additional authorities over certain geographic areas or wetland functions, especially in regard to habitat values. The Water Boards' authority is derived from California's Porter-Cologne Water Quality Control Act, which defines "Waters of the State" as "any surface water or groundwater, including saline waters, within the boundaries of the state."

In 1993, by executive order, the state adopted a goal of no net loss under the California Wetlands Conservation Policy, along with a goal to "achieve a long-term net gain in the quantity, quality, and permanence of wetlands acreage and values in California in a manner that fosters creativity, stewardship, and respect for private property" (California State Water Board 2022).

This side intentionally left blank.

3.0 Methods

3.1 Survey Methods

EMC Planning Group's investigation focused on identifying and mapping areas meeting the definition of wetlands and other Waters of the United States under Section 404 of the Clean Water Act or Section 10 of the Rivers and Harbors Act. The survey was conducted in anticipation of coordinating with the USACE on a jurisdictional determination.

Wetland identification and delineation followed the methods described in the *Corps of Engineers Wetland Delineation Manual* (USACE 1987) and the supplemental guidance contained in the *Regional Supplement to the Corps of Engineers Wetland Delineation Manual: Arid West Region (Version 2.0)* (USACE 2008). Where differences in the two documents occur, the Regional Supplement takes precedence over the Corps Manual for applications in the Arid West Region (USACE 2008).

Specific objectives of this study were to:

- Identify and review topographical maps, aerials, and drainage information regarding the project site;
- Conduct wetland delineations within the project site boundary using requirements of the USACE Manuals; and
- Prepare a wetland delineation report identifying jurisdictional wetlands, including acreages.

Wetlands are defined in the Code of Federal Regulations, Section 328.3(b) as "areas that are inundated or saturated by surface or groundwater at a frequency and duration sufficient to support, and that under normal circumstances do support, a prevalence of vegetation typically adapted for life in saturated soil conditions." In the absence of excessive human disturbances or unusual or atypical circumstances, under the USACE wetland parameter criteria, an area must contain three primary hydrological characteristics to be considered a wetland:

- Hydrophytic vegetation;
- Hydric soils; and
- Wetland hydrology.

Wetland delineation was based on a combination of the determination of the top of stream bank and the outer edge of riparian vegetation.

3.2 Preliminary Data Gathering

High-resolution Digital Elevation Modeling (DEM) data for the project site was obtained from the U.S. Geology Survey National Map 3D Elevation Program. This data allowed for topographic modeling for delineating wetland catchments and understanding hydrologic connectivity across the project site. Additionally, the U.S. Department of Agriculture Natural Resources Conservation Service (NRCS) Web Soil Survey online database (USDA-NRCS 2025) was reviewed for soil types present on the project site.

Jurisdictional aquatic resources were identified on field maps through the use of aerial photography, topographic mapping, soil mapping, existing wetland mapping, and project site plans. This resource review included:

- Aerial photography from Google Earth, including historical imagery (2025);
- USGS topographic quadrangle map for San Leandro;
- Soils information from the USDA-NRCS (2025); and
- US Fish and Wildlife Service (USFWS) National Wetlands Inventory mapping.

3.3 Hydric Soil Indicators

A hydric soil is defined as a soil that formed under conditions of saturation, flooding, or ponding long enough during the growing season to develop anaerobic conditions in the upper part. A hydric soil is waterlogged long enough to support not only the growth of plants adapted to life in anaerobic conditions but also the regeneration of such plants.

The U.S. Department of Agriculture Natural Resources Conservation Service (NRCS) Web Soil Survey online database was consulted as a guide to determining the general distribution of soils on the project site and whether or not they were poorly drained or had a hydric soil rating. However, hydric soils were determined to occur at a data point only if positive field indicators were present.

Soil test pit analysis was not used at the project area due to the high levels of disturbance and existing standing water within the creek, and lack of hydrophytic vegetation outside of the creek banks. The presence of hydric soils or processes that would lead to their development are assumed to occur within the creek channel.

3.4 Wetland Hydrology Indicators

The USACE jurisdictional wetland hydrology criterion is met if an area is inundated or saturated for a period sufficient to create anaerobic soil conditions during the growing season (described in the Arid West Supplement as a minimum of 14 consecutive days). Hydrology indicators are often the most temporary of wetland indicators. Those involving direct observation of surface water or

saturated soils are usually present only during the normal wet portion of the growing season and may be absent during the dry season or during drought years. Many wetlands in the Arid West region are dry for much of the year and, at those times, may lack hydrology indicators entirely.

3.5 Hydrophytic Vegetation Indicators

Plant species identified in the study area were assigned a wetland indicator status primarily following the USACE National Wetland Plant List online database (USACE 2025).

To the extent possible, a wetland delineation making hydrophytic vegetation decisions should be based on the plant community that is normally present during the wet portion of the growing season in a normal rainfall year. However, wetland determinations must often be performed at other times of year, or in years with unusual or atypical weather conditions.

3.6 Delineation Criteria

In California, perennial streams are considered part of the larger "waters of the state" and are subject to protection under the Clearn Water Act and the Porter-Cologne Act.

Unlike most wetlands, the soils in arid stream channels are typically Entisols (i.e., young soils with little horizon development), reflecting the dynamics of recent flood events and transport of sediments within the channel. Thus, the use of hydric soils or their features for delineating arid streams is limited since these systems rarely develop redoximorphic features.

Due to the absence of adjacent wetland features, this wetland delineation was based on a combination of the determination of the top of stream bank, the ordinary high-water mark, and the outer edge of riparian vegetation.

3.7 Field Methods

EMC Planning Group biologist Rose Ashbach, M.S., and Terracon biologist Brett Bell conducted a wetland delineation for Waters of the United States on the Cary-Haas Pedestrian Bridge Replacement Project site on March 17, 2025, at which time vegetation and hydrology data were examined throughout the project site.

The routine method for wetland delineation was followed as described in the Corps Manual and Arid West Regional Supplement. All aquatic resources were mapped using Environmental Systems Research Institute's (ESRI) Field Maps mobile mapping application and a Trimble R1 sub-meter Global Positioning System (GPS) receiver.

This side intentionally left blank.

4.0 Results

The following discussion reports the soils, hydrology, and vegetation observed at the site during the surveys.

4.1 Soils

Soil survey information for the project site was obtained from the U.S. Department of Agriculture Natural Resources Conservation Service (NRCS) Web Soil Survey online database as a guide to determining the general distribution of soils on the project site. One soil series was identified as occurring within the project boundary (Table 4-1, Project Site Soils; Figure 4-1, NRCS Soils Map). This series is derived from alluvial parent material (USDA-NRCS 2025).

Table 4-1 Project Site Soils

Soil Series	Map Symbol	Drainage Class	Hydric Soil Rating
Yolo silt loam, o to 3 percent slopes, dry, MLRA 14	161	Well drained	None

Source: NRCS 2025

4.2 Hydrology

The USACE jurisdictional wetland hydrology criterion is met if an area is inundated or saturated for a period sufficient to create anaerobic soil conditions during the growing season (described in the Arid West Supplement as a minimum of 14 consecutive days).

Hydrological Alterations

Two upstream reservoirs, the Upper San Leandro Reservoir and Lake Chabot, and urbanization near the mouth of the creek have created multiple hydrological alterations along San Leandro Creek. Examples of hydrologic alterations include regulated flows, barriers to fish passage, channelization, and increase contaminate concentrations in water and sediments.

Watershed

The project site is within the San Francisco Bay Watershed. More specifically, the U.S. Environmental Protection Agency identifies the study area within the "San Leandro Creek Subwatershed" 12-digit National Hydrography Dataset (NHD) Hydrologic Unit Code (HUC) watershed (180500041001) (USGS 2025).

The 49.4 square-mile San Leandro Creek Watershed lies within the city of San Leandro, a portion of the city of Oakland, the East Bay hills, and includes the town of Moranga. The watershed begins on the managed parkland at the Southern edge of Sibley Volcanic Regional Preserve. The creek travels through the Oakland and San Leandro hills to the Upper San Leandro Reservoir then to Lake Chabot. Multiple tributaries meet the creek above Lake Chabot, and one, Miller Creek, joins just below the spillway. San Leandro Creek then heads through the city of San Leandro. The creek is largely uncovered until San Leandro Boulevard, where the creek is diverted through an engineered channel that continue to San Leandro Bay within the larger San Francisco Bay.

The San Leandro Watershed has been formed by geologic processes such as sedimentation, volcanism, erosion, and tectonic activity. In the east, creeks cut through sedimentary rock, while on the west they carve steep valleys into Cretaceous sandstone. The creek's northern headwaters originate near a 10-millon year old volcano in the Sibley Volcanic Regional Preserve. The Creek shifts sharply at the Hayward fault and continues across and alluvial plain formed by ancient stream deposits. The creek once flowed into tidal marsh, now filled for urban development, and terminates in the San Leandro Bay. (Alameda County Flood Control and Water Conservation District 2025).

National Wetlands Inventory

The USFWS's National Wetlands Inventory classifies all wetlands on the project sites as a "Riverine" system that is upper perennial (3), characterized by a high gradient, with an unconsolidated bottom (UB), that is permanently flooded (H). Although the creek is channeled and culverted in places, it is uncovered throughout most of its course. Figure 4-2, National Wetlands Inventory Map, presents the USFWS's wetlands mapping of the project site.

Water Regime

Water regimes determine characteristic wetland plant communities and wildlife habitat. These hydrologic characteristics are determined by the duration and timing of surface inundation, both yearly and long-term (flood duration and flood frequency), and by groundwater fluctuations. Due to the steep banks, adjacent wetlands are not present within the project site.

San Leandro Creek is classified in the NWI as upper perennial. Upper perennial systems are characterized by a high gradient, although the reach within the project site has a low gradient, and has very little floodplain development. The stream experiences some water flow in all years, except during years of extreme drought. (Cowardin et al. 1995, FGDC 2013).

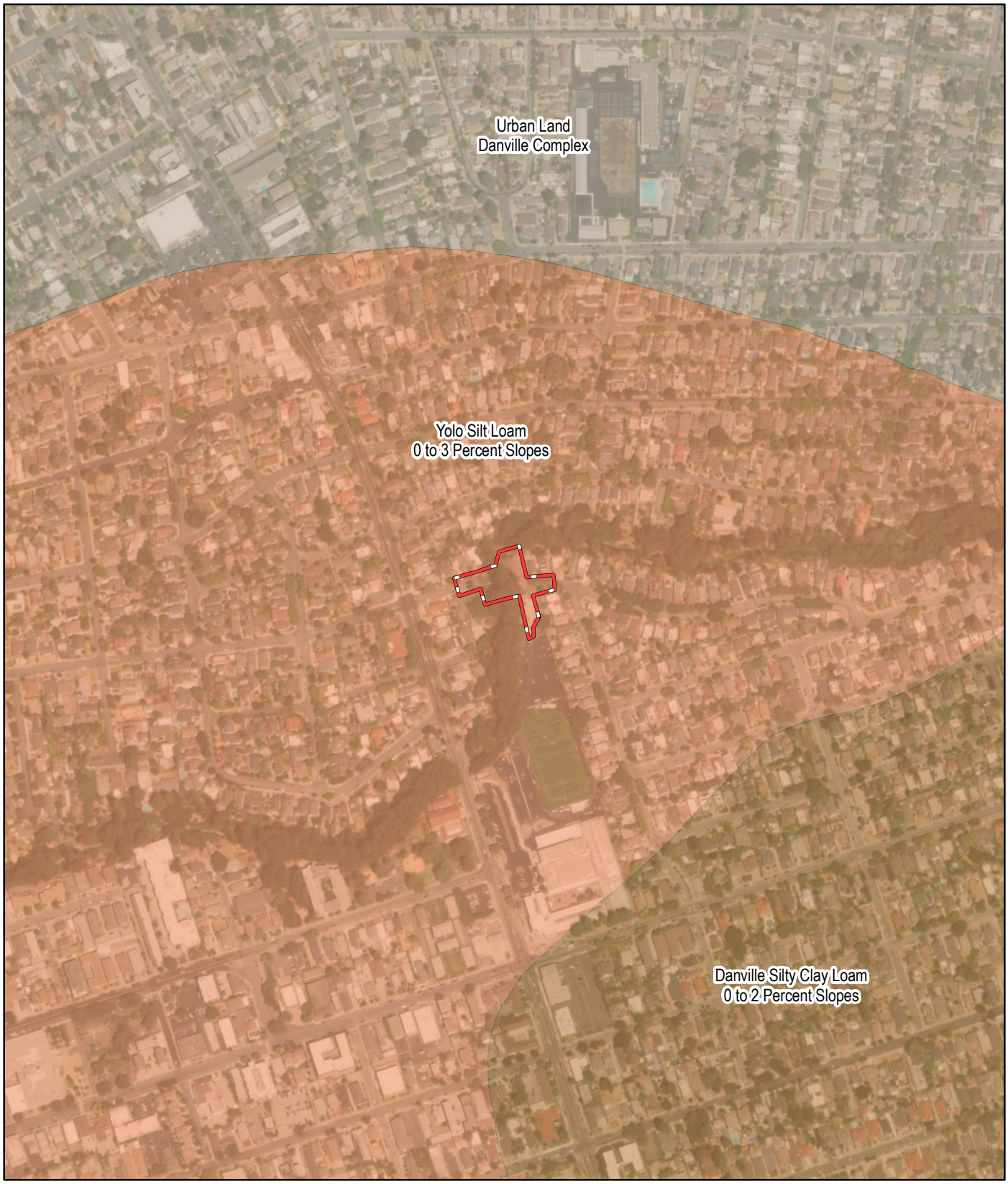

Source: ESRI 2025, SSURGO 2003

0 500 feet

Approximate Project Boundary

Figure 4-1

NRCS Soils Map

Cary-Haas Pedestrian Bridge Replacement Project Wetland Delineation

This side intentionally left blank.

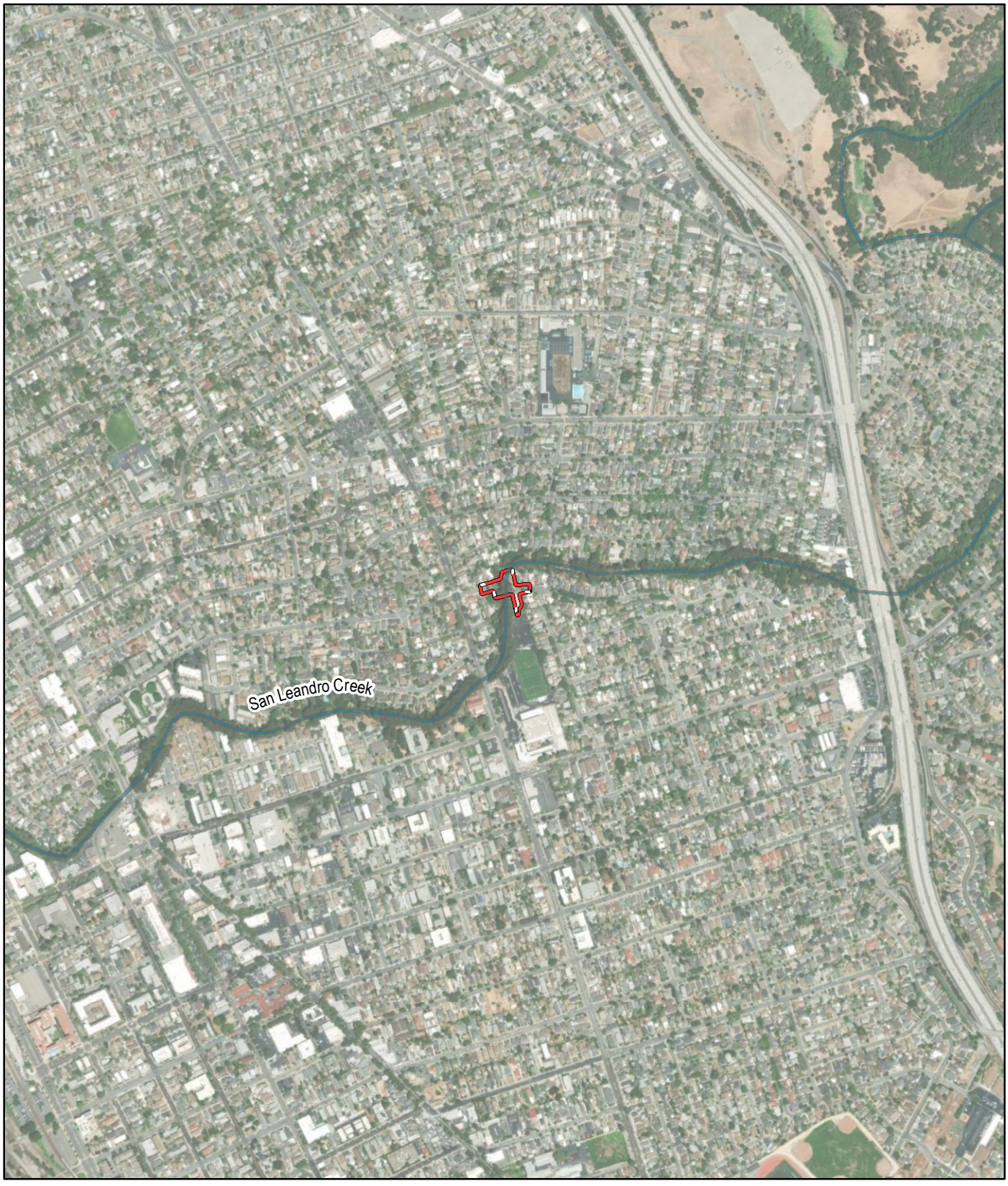

Source: ESRI 2025, USFWS NWI 2020

0 1000 feet

Approximate Project Boundary

Riverine

Figure 4-2

National Wetlands Inventory

Cary-Haas Pedestrian Bridge Replacement Project Wetland Delineation

This side intentionally left blank.

4.3 Vegetation

Wetland or hydrophytic vegetation conclusions are based on the wetland indicator status of species that comprise the plant community. Species in the facultative categories (FACW, FAC, and FACU) are recognized as occurring in both wetlands and non-wetlands. Most wetlands are dominated by species rated OBL, FACW, and FAC. Some wetland communities may be dominated by FACU species and cannot be identified by dominant species alone. Under those circumstances, other indicators of hydrophytic vegetation must also be considered.

East Slopes

Vegetation below the top of bank is distinctly different on the western and eastern slopes. The east side is an active restoration area consisting of planted riparian trees, including coast live oak (*Quercus agrifolia*), California buckeye (*Aesculus californica*), box elder (*Acer negundo*), California bay (*Umbellularia californica*), alder (*Alnus* sp.), and elderberry (*Sambucus* sp.), with an understory dominated by non-native annuals including poison hemlock (*Conium maculatum*), English ivy (*Hedera helix*), ripgut brome (*Bromus diandrus*), catchweed bedstraw (*Galium aparine*), cheeseweed (*Malva* sp.), bur clover (*Medicago polymorpha*), miner's lettuce (*Claytonia perfoliata*), fiesta flower (*Pholistoma* sp.), scarlet pimpernel (*Anagallis arvensis*), Bermuda buttercup (*Oxalis pes-caprae*), lupine (*Lupinus* sp.), and cranes bill (*Erodium* spp).

West Slopes

Invasive species dominate the west side of the project area. Dominant species include English ivy, catchweed bedstraw, Himalayan blackberry (*Rubus armeniacus*), fumitory (*Fumaria officinalis*), ripgut brome, milk thistle (*Silybum marianum*), blue dawn flower (*Ipomoea indica*). Other species adjacent to the project site include toyon (*Heteromeles arbutifolia*), coast live oak, acacia (*Acacia* sp.), and nasturtium (*Tropaeolum* sp.).

Ruderal

The portion of the Middle School property that will be used for staging includes compacted gravel soil surrounded by the school to the east, Cary Avenue to the west, San Leandro Creek to the south, and residential to the north. The vegetation within this area is dominated by non-native species, including ripgut brome, scarlet pimpernel, Cranes bill, bur clover, English ivy, Bermuda buttercup, cheese weed, blue gum eucalyptus (*Eucalyptus globulus*).

Emergent Vegetation

Wetland vegetation within the site is limited due to steep slopes and absence of a floodplain. Such vegetation is confined to small, localized areas outside of the project site where the creek widens and becomes shallow. Emergent vegetation along San Leandro Creek included smartweed (*Poligonum* sp.), tall flatsedge (*Cyperus eragrostis*), curly dock (*Rumex crispus*), nettle (*Urtica diotica*), and smilo grass (*Stipa miliacea*).

4.4 Waters of the United States

Wetland delineation results are shown on Figure 4-3, Potentially Jurisdictional Waters. Photographs of jurisdictional features within the project site are included in Figure 4-4, Site Photographs. Wetland classification follows the methods described in Wetlands and Deepwater Habitats of the United States (Cowardin et al. 1995), currently used by the USFWS National Wetlands Inventory, and an earlier USFWS classification system known as Circular 39 (Shaw and Fredine 1956). EMC Planning Group identified one potential waters of the United States on the project site, presented in Table 4-2, Potential Waters of the United States.

Table 4-2 Potential Waters of the United States

Feature	Area/Length	Classification	Comments
San Leandro Creek	0.08 acres	Riverine System	Jurisdictional Waters of the US. Perennial Stream, OHWM.
Impacts	288 square feet	Slope	Jurisdictional Waters of the State, Slope below top of bank.

SOURCE: EMC Planning Group 2024

The following provides a brief description of each wetland feature identified on the project site and shown on Figure 4-3, Potentially Jurisdictional Waters.

San Leandro Creek

San Leandro Creek is classified as an upper perennial riverine system. The creek is perennial with flow throughout most of the year, expect in extreme drought years. San Leandro Creek has an established ordinary high water mark that is defined by undercut banks, channel bars, matted down vegetation, exposed roots below intact soil layer, presence of organic litter, leaf litter disturbed or washed away.

Within the project area, San Leandro Creek has steep banks, and no developed floodplain. The creek experiences water flow year-round. Because of its steep banks, there are no adjacent wetlands, and very little hydrophytic vegetation.

Invasive species and non-native plants dominate the western slope. The eastern slope was restored after removal of the pedestrian bridge and has been planted with riparian tree saplings. Non-native annual plants dominate the understory on this bank. Outside of the project area, the creek widens and there is a small floodplain, with hydrophytic vegetation present, including tall flat sedge (*Cyperus erogrostis*), dock (*Rumex* sp.), smart weed (*Persicaria* sp.), and watercress (*Nasturtium officionale*). Several mature riparian trees remain on the site, including alder, cottonwood (*Populus fremontii*) and coast live oak.

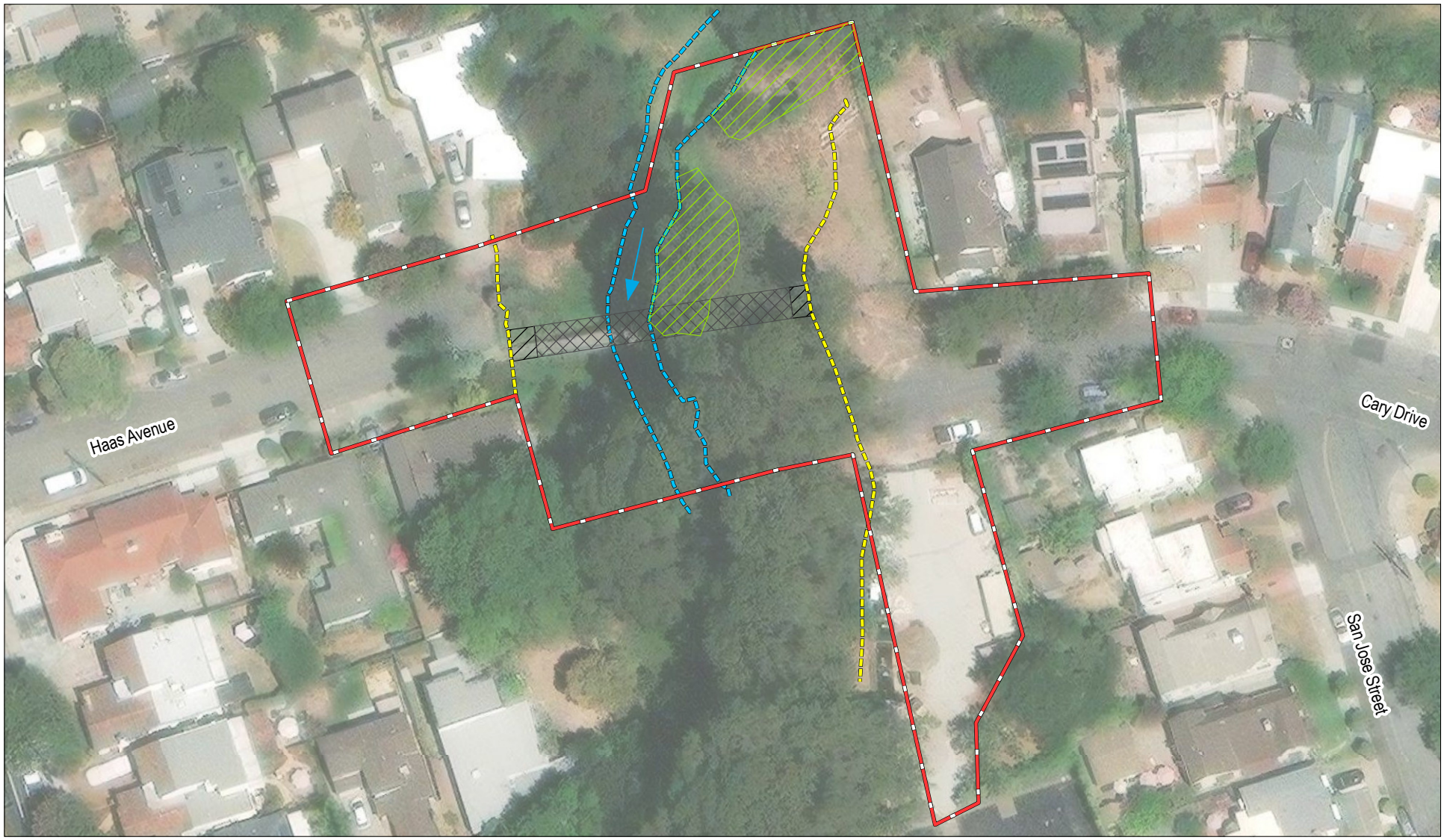

0 60 feet

Approximate Project Boundary
Top of Bank
Impact Area
Ordinary High Water Mark
Riparian Vegetation
Clear Span Bridge

Source: ESRI 2025, Alameda County 2025, MNS Engineers 2025

Figure 4-3

Potentially Jurisdictional Waters

Cary-Haas Pedestrian Bridge Replacement Project Wetland Delineation

This side intentionally left blank.



Photo 1. San Leandro Creek and the west slope of the project site.



Photo 2. Bar deposit and emergent vegetation outside of project area.



Photo 3. Edge of east slope restoration with jute below OHWM.



Photo 4. OHWM with cut banks below debris deposits.



Photo 5. Armored slope and concrete tow on river right (west slope) of project site.



Photo 6. River left (east slope) of project site. Jute netting below OHWM.

Source: EMC Planning Group 2025

Figure 4-4

Site Photographs

This side intentionally left blank.

4.5 Regulatory Requirements

Areas within the top of bank and ordinary high water mark were delineated to identify impacts and permitting requirements. There are several riparian trees on the slope, which have also been mapped. San Leandro Creek meets the criteria for Waters of the United States. Approximately 0.08 acres of this jurisdictional feature occur within the project site.

The proposed bridge will clear span San Leandro Creek and impacts to federally jurisdictional features are not anticipated. Impacts to riparian vegetation will be avoided. Impacts to aquatic features are limited to small areas below the top of bank on both sides of the pedestrian bridge. These impacts are associated with the removal of the former bridge footings and installation of new bridge abutments. he estimated disturbance below top of bank is approximately 144 square feet per side, resulting in a total impact area of 288 square feet.

Because no impacts to waters of the United States are anticipated, the project will likely require a Waste Discharge Requirement (WDR) from the Regional Water Quality Control Board pursuant to the Porter-Cologne Water Quality Control Act.

This side intentionally left blank.

5.0 References

Alameda County Flood Control & Water Conservation District. 2025. Accessed April 2025. https://acfloodcontrol.org/

Baldwin, B. et al. 2012. *The Jepson Manual: Vascular Plants of California*. Second Edition. University of California Press, Berkeley, CA.

Beidleman, L. H. and E. N. Kozloff. 2014. *Plants of the San Francisco Bay Region: Mendocino to Monterey*. University of California Press, Berkeley, CA.

Calflora Database. 2024. *Calflora: Information on California plants for education, research and conservation* online database. Berkeley, California. Accessed April 2025. https://www.calflora.org/

Climate Data. 2025. *Data and Graphs for Weather and Climate in San Leandro*. Accessed April 2025. https://en.climate-data.org/north-america/united-states-of-america/california/san-leandro-16195/

Cowardin et al. 1995. Classification of Wetlands and Deepwater Habitats of the United States. Fish and Wildlife Service, Office of Biological Services, U.S. Dept. of the Interior.

Federal Geographic Data Committee (FGDC). 2013. *Classification of Wetlands and Deepwater Habitats of the United States*. Adapted from Cowardin, Carter, Golet and LaRoe (1979) Wetlands Subcommittee.

Jepson Flora Project. 2025. *Jepson eFlora* online database. Accessed April 2025. https://ucjeps.berkeley.edu/eflora/

Keddy, Paul. 2016. *Wetland Ecology: Principles and Conservation*. Cambridge University Press.

National Integrated Drought Information System (NIDIS). National Oceanic and Atmospheric Administration online database. 2025. Accessed April 2025. https://www.drought.gov/

National Oceanic and Atmospheric Administration. National Weather Service online database (NOAA-NWS). 2025. U.S. Department of Commerce. Accessed April 2025. http://www.nws.noaa.gov/.

Shaw, Samuel P., and Clarence Gordon Fredine. 1971. *Wetlands of the United States: Their Extent and Their Value to Waterfowl and Other Wildlife*. U.S. Dept. of the Interior, Fish and Wildlife Service.

U.S. Army Corps of Engineers (USACE). 1987. *Corps of Engineers Wetland Delineation Manual*. Environmental Laboratory, Department of the Army, Waterways Experiment Station, Vicksburg, MS.

U.S. Army Corps of Engineers (USACE). 2008. *Regional Supplement to the Corps of Engineers Wetlands Delineation Manual: Arid West Region* (Version 2.0). U.S. Army Engineer Research and Development Center, Vicksburg, MS.

U.S. Army Corps of Engineers (USACE). 2025. *National Wetland Plant List* online database. Accessed April 2025. http://wetlandplants.usace.army.mil/nwpl_static/v34/home/home.html#

U.S. Department of Agriculture, Natural Resource Conservation Service (USDA-NRCS). 2025. *Web Soil Survey* online database. Accessed April 2025. http://websoilsurvey.sc.egov.usda.gov/App/WebSoilSurvey.aspx

U.S. Department of Agriculture, Natural Resources Conservation Service (USDA-NRCS). 2018. *Field Indicators of Hydric Soils in the United States*. L.M. Vasilas, G.W. Hurt, and C.V. Noble (eds.).

U.S. Fish and Wildlife Service (USFWS). 2025. *National Wetlands Inventory* online database. Washington, D.C. Accessed April 2025. http://www.fws.gov/wetlands/

U.S. Geological Survey (USGS). 2025. *The National Map* online database. Watershed Boundary Dataset. https://viewer.nationalmap.gov/advanced-viewer/

Wetland Delineation Field Forms

A

APPENDIX

WETLAND DETERMINATION DATA FORM – Arid West Region

Project/Site: Cary-Haas Bridge Replacement, San Leandro Creek City/County: San Leandro, Alameda County Sampling Date: 3/17/2025

Applicant/Owner: Alameda County Flood Control and Water Conservation District State: CA Sampling Point: 1 Upland

Investigator(s): Rose Ashbach, Brett Bell Section, Township, Range: Section 9, Township 3 South, Range 2 West of the Mount Diablo Meridian.

Landform (hillslope, terrace, etc.): Hill slope Local relief (concave, convex, none): None Slope (%): 35

Subregion (LRR): Mediterranean Lat: 37.731013 Long: 122.148518 Datum: WGS 84

Soil Map Unit Name: Yolo Silt Loam 0 to 3 percent slopes NWI classification: Riverine

Are climatic / hydrologic conditions on the site typical for this time of year? Yes X No _____ (If no, explain in Remarks.)

Are Vegetation _____, Soil _____, or Hydrology _____ significantly disturbed? Are "Normal Circumstances" present? Yes x No _____

Are Vegetation _____, Soil _____, or Hydrology _____ naturally problematic? (If needed, explain any answers in Remarks.)

SUMMARY OF FINDINGS – Attach site map showing sampling point locations, transects, important features, etc.

Hydrophytic Vegetation Present?	Yes _____	No x	**Is the Sampled Area within a Wetland?** Yes _____ No x
Hydric Soil Present?	Yes _____	No _____	
Wetland Hydrology Present?	Yes _____	No x	

Remarks:

Project slopes are disturbed with non-native invasive species or restored and recently disturbed due to tree fall.

VEGETATION – Use scientific names of plants.

	Absolute % Cover	Dominant Species?	Indicator Status
Tree Stratum (Plot size: _____)			
1.			
2.			
3.			
4.			
	_____ = Total Cover		
Sapling/Shrub Stratum (Plot size: _____)			
1.			
2.			
3.			
4.			
5.			
	_____ = Total Cover		
Herb Stratum (Plot size: 10 m x 10 m)			
1. Fumaria officionalis	20	x	UPL
2. Bromus Diandrus	15	x	UPL
3. Tropaeolum Majus	10		UPL
4. Gallium aparine	10		FACU
5.			
6.			
7.			
8.			
	55 = Total Cover		
Woody Vine Stratum (Plot size: 10 m x 10 m)			
1. Hedera helix	13		FACU
2. Ipomoea indica	30	x	FAC
	43 = Total Cover		

% Bare Ground in Herb Stratum 2 % Cover of Biotic Crust _____

Dominance Test worksheet:

Number of Dominant Species That Are OBL, FACW, or FAC: 1 (A)

Total Number of Dominant Species Across All Strata: 3 (B)

Percent of Dominant Species That Are OBL, FACW, or FAC: 33% (A/B)

Prevalence Index worksheet:

Total % Cover of:	Multiply by:
OBL species _____	x 1 = _____
FACW species _____	x 2 = _____
FAC species 30	x 3 = 90
FACU species 23	x 4 = 92
UPL species 48	x 5 = 225
Column Totals: 98 (A)	407 (B)

Prevalence Index = B/A = 4.15

Hydrophytic Vegetation Indicators:

- ☐ Dominance Test is >50%
- ☐ Prevalence Index is ≤3.0[1]
- ☐ Morphological Adaptations[1] (Provide supporting data in Remarks or on a separate sheet)
- ☐ Problematic Hydrophytic Vegetation[1] (Explain)

[1]Indicators of hydric soil and wetland hydrology must be present, unless disturbed or problematic.

Hydrophytic Vegetation Present? Yes _____ No x

Remarks:

Highly disturbed, ruderal vegetation on steep slope

SOIL

Sampling Point: 1 Upland

Profile Description: (Describe to the depth needed to document the indicator or confirm the absence of indicators.)

Depth (inches)	Matrix Color (moist)	%	Redox Features Color (moist)	%	Type[1]	Loc[2]	Texture	Remarks

[1]Type: C=Concentration, D=Depletion, RM=Reduced Matrix, CS=Covered or Coated Sand Grains. [2]Location: PL=Pore Lining, M=Matrix.

Hydric Soil Indicators: (Applicable to all LRRs, unless otherwise noted.)

- ☐ Histosol (A1)
- ☐ Histic Epipedon (A2)
- ☐ Black Histic (A3)
- ☐ Hydrogen Sulfide (A4)
- ☐ Stratified Layers (A5) (**LRR C**)
- ☐ 1 cm Muck (A9) (**LRR D**)
- ☐ Depleted Below Dark Surface (A11)
- ☐ Thick Dark Surface (A12)
- ☐ Sandy Mucky Mineral (S1)
- ☐ Sandy Gleyed Matrix (S4)
- ☐ Sandy Redox (S5)
- ☐ Stripped Matrix (S6)
- ☐ Loamy Mucky Mineral (F1)
- ☐ Loamy Gleyed Matrix (F2)
- ☐ Depleted Matrix (F3)
- ☐ Redox Dark Surface (F6)
- ☐ Depleted Dark Surface (F7)
- ☐ Redox Depressions (F8)
- ☐ Vernal Pools (F9)

Indicators for Problematic Hydric Soils[3]:

- ☐ 1 cm Muck (A9) (**LRR C**)
- ☐ 2 cm Muck (A10) (**LRR B**)
- ☐ Reduced Vertic (F18)
- ☐ Red Parent Material (TF2)
- ☐ Other (Explain in Remarks)

[3]Indicators of hydrophytic vegetation and wetland hydrology must be present, unless disturbed or problematic.

Restrictive Layer (if present):

Type: _____

Depth (inches): _____

Hydric Soil Present? **Yes** _____ **No** X

Remarks:

steep slope with no hydrophytic vegetation. No floodplain. Non hydric soil.

HYDROLOGY

Wetland Hydrology Indicators:

Primary Indicators (minimum of one required; check all that apply)

- ☐ Surface Water (A1)
- ☐ High Water Table (A2)
- ☐ Saturation (A3)
- ☐ Water Marks (B1) (**Nonriverine**)
- ☐ Sediment Deposits (B2) (**Nonriverine**)
- ☐ Drift Deposits (B3) (**Nonriverine**)
- ☐ Surface Soil Cracks (B6)
- ☐ Inundation Visible on Aerial Imagery (B7)
- ☐ Water-Stained Leaves (B9)
- ☐ Salt Crust (B11)
- ☐ Biotic Crust (B12)
- ☐ Aquatic Invertebrates (B13)
- ☐ Hydrogen Sulfide Odor (C1)
- ☐ Oxidized Rhizospheres along Living Roots (C3)
- ☐ Presence of Reduced Iron (C4)
- ☐ Recent Iron Reduction in Tilled Soils (C6)
- ☐ Thin Muck Surface (C7)
- ☐ Other (Explain in Remarks)

Secondary Indicators (2 or more required)

- ☐ Water Marks (B1) (**Riverine**)
- ☐ Sediment Deposits (B2) (**Riverine**)
- ☐ Drift Deposits (B3) (**Riverine**)
- ☐ Drainage Patterns (B10)
- ☐ Dry-Season Water Table (C2)
- ☐ Crayfish Burrows (C8)
- ☐ Saturation Visible on Aerial Imagery (C9)
- ☐ Shallow Aquitard (D3)
- ☐ FAC-Neutral Test (D5)

Field Observations:

Surface Water Present? Yes _____ No X Depth (inches): _____

Water Table Present? Yes _____ No X Depth (inches): _____

Saturation Present? (includes capillary fringe) Yes _____ No X Depth (inches): _____

Wetland Hydrology Present? **Yes** _____ **No** X

Describe Recorded Data (stream gauge, monitoring well, aerial photos, previous inspections), if available:

Remarks:

Slope, no surface water, no water table. No Hydrology present.

WETLAND DETERMINATION DATA FORM – Arid West Region

Project/Site: Cary-Haas Bridge Replacement, San Leandro Creek City/County: San Leandro, Alameda County Sampling Date: 3/17/2025

Applicant/Owner: Alameda County Flood Control and Water Conservation District State: CA Sampling Point: 1 Wetland

Investigator(s): Rose Ashbach, Brett Bell Section, Township, Range: Section 9, Township 3 South, Range 2 West of the Mount Diablo Meridian.

Landform (hillslope, terrace, etc.): Hill slope Local relief (concave, convex, none): None Slope (%): 35

Subregion (LRR): Mediterranean Lat: 37.731242 Long: 122.148256 Datum: WGS 84

Soil Map Unit Name: Yolo Silt Loam 0 to 3 percent slopes NWI classification: Riverine

Are climatic / hydrologic conditions on the site typical for this time of year? Yes X No _____ (If no, explain in Remarks.)

Are Vegetation _____, Soil _____, or Hydrology _____ significantly disturbed? Are "Normal Circumstances" present? Yes x No _____

Are Vegetation _____, Soil _____, or Hydrology _____ naturally problematic? (If needed, explain any answers in Remarks.)

SUMMARY OF FINDINGS – Attach site map showing sampling point locations, transects, important features, etc.

Hydrophytic Vegetation Present?	Yes x	No _____	**Is the Sampled Area within a Wetland?** Yes x No _____
Hydric Soil Present?	Yes _____	No _____	
Wetland Hydrology Present?	Yes x	No _____	

Remarks:

Project slopes are disturbed with non-native invasive species or restored and recently disturbed due to tree fall. River is flowing and considered perennial. Flow controlled by upstream reservoir release.

VEGETATION – Use scientific names of plants.

Tree Stratum (Plot size: 10m x10m)	Absolute % Cover	Dominant Species?	Indicator Status
1. Populus fremontii	5	Y	FACW
2.			
3.			
4.			
	5	= Total Cover	
Sapling/Shrub Stratum (Plot size: _____)			
1.			
2.			
3.			
4.			
5.			
	_____	= Total Cover	
Herb Stratum (Plot size: 5 m x 5 m)			
1. Cyerus erogrostis	40	Y	FACW
2. Rumex crispus	15	Y	FAC
3. Persicaria punctata	18	Y	OBL
4. Nasturtium officionale	1	N	OBL
5. Gallium ararine	1	N	FACU
6.			
7.			
8.			
	62	= Total Cover	
Woody Vine Stratum (Plot size: _____)			
1.			
2.			
	_____	= Total Cover	

% Bare Ground in Herb Stratum 10 % Cover of Biotic Crust _____

Dominance Test worksheet:

Number of Dominant Species That Are OBL, FACW, or FAC: 4 (A)

Total Number of Dominant Species Across All Strata: 4 (B)

Percent of Dominant Species That Are OBL, FACW, or FAC: 1 (A/B)

Prevalence Index worksheet:

Total % Cover of:		Multiply by:	
OBL species	1	x 1 =	1
FACW species	45	x 2 =	90
FAC species	1	x 3 =	3
FACU species	_____	x 4 =	_____
UPL species	_____	x 5 =	_____
Column Totals:	47 (A)		94 (B)

Prevalence Index = B/A = 2

Hydrophytic Vegetation Indicators:

- ☑ Dominance Test is >50%
- ☑ Prevalence Index is ≤3.0[1]
- ☐ Morphological Adaptations[1] (Provide supporting data in Remarks or on a separate sheet)
- ☐ Problematic Hydrophytic Vegetation[1] (Explain)

[1]Indicators of hydric soil and wetland hydrology must be present, unless disturbed or problematic.

Hydrophytic Vegetation Present? Yes x No x

Remarks:

Wetland vegetation is mostly absent from the site due to the steep slopes. The wetland vegetation from this point is taken on a small bar adjacent to the creek. Similar vegetation grows along armored banks of the creek and where the slope gently slopes into the creek.

SOIL

Sampling Point: 1 Wetland

Profile Description: (Describe to the depth needed to document the indicator or confirm the absence of indicators.)

Depth (inches)	Matrix Color (moist)	%	Redox Features Color (moist)	%	Type[1]	Loc[2]	Texture	Remarks

[1]Type: C=Concentration, D=Depletion, RM=Reduced Matrix, CS=Covered or Coated Sand Grains. [2]Location: PL=Pore Lining, M=Matrix.

Hydric Soil Indicators: (Applicable to all LRRs, unless otherwise noted.)

- ☐ Histosol (A1)
- ☐ Histic Epipedon (A2)
- ☐ Black Histic (A3)
- ☐ Hydrogen Sulfide (A4)
- ☐ Stratified Layers (A5) (**LRR C**)
- ☐ 1 cm Muck (A9) (**LRR D**)
- ☐ Depleted Below Dark Surface (A11)
- ☐ Thick Dark Surface (A12)
- ☐ Sandy Mucky Mineral (S1)
- ☐ Sandy Gleyed Matrix (S4)
- ☐ Sandy Redox (S5)
- ☐ Stripped Matrix (S6)
- ☐ Loamy Mucky Mineral (F1)
- ☐ Loamy Gleyed Matrix (F2)
- ☐ Depleted Matrix (F3)
- ☐ Redox Dark Surface (F6)
- ☐ Depleted Dark Surface (F7)
- ☐ Redox Depressions (F8)
- ☐ Vernal Pools (F9)

Indicators for Problematic Hydric Soils[3]:

- ☐ 1 cm Muck (A9) (**LRR C**)
- ☐ 2 cm Muck (A10) (**LRR B**)
- ☐ Reduced Vertic (F18)
- ☐ Red Parent Material (TF2)
- ☐ Other (Explain in Remarks)

[3]Indicators of hydrophytic vegetation and wetland hydrology must be present, unless disturbed or problematic.

Restrictive Layer (if present):

Type: _____

Depth (inches): _____

Hydric Soil Present? Yes _____ No X

Remarks:

Standing water present, hydric soil assumed.

HYDROLOGY

Wetland Hydrology Indicators:

Primary Indicators (minimum of one required; check all that apply)

- ☐ Surface Water (A1)
- ☐ High Water Table (A2)
- ☐ Saturation (A3)
- ☐ Water Marks (B1) (**Nonriverine**)
- ☐ Sediment Deposits (B2) (**Nonriverine**)
- ☐ Drift Deposits (B3) (**Nonriverine**)
- ☐ Surface Soil Cracks (B6)
- ☐ Inundation Visible on Aerial Imagery (B7)
- ☐ Water-Stained Leaves (B9)
- ☐ Salt Crust (B11)
- ☐ Biotic Crust (B12)
- ☐ Aquatic Invertebrates (B13)
- ☐ Hydrogen Sulfide Odor (C1)
- ☐ Oxidized Rhizospheres along Living Roots (C3)
- ☐ Presence of Reduced Iron (C4)
- ☐ Recent Iron Reduction in Tilled Soils (C6)
- ☐ Thin Muck Surface (C7)
- ☐ Other (Explain in Remarks)

Secondary Indicators (2 or more required)

- ☑ Water Marks (B1) (**Riverine**)
- ☑ Sediment Deposits (B2) (**Riverine**)
- ☑ Drift Deposits (B3) (**Riverine**)
- ☐ Drainage Patterns (B10)
- ☐ Dry-Season Water Table (C2)
- ☐ Crayfish Burrows (C8)
- ☐ Saturation Visible on Aerial Imagery (C9)
- ☐ Shallow Aquitard (D3)
- ☐ FAC-Neutral Test (D5)

Field Observations:

Surface Water Present? Yes X No _____ Depth (inches): _____

Water Table Present? Yes X No _____ Depth (inches): _____

Saturation Present? (includes capillary fringe) Yes X No _____ Depth (inches): _____

Wetland Hydrology Present? Yes X No _____

Describe Recorded Data (stream gauge, monitoring well, aerial photos, previous inspections), if available:

Creek data shows continued low flows.

Remarks:

Riverine feature. Water present.

Print Form | Save As | E-mail

U.S. Army Corps of Engineers (USACE)

RAPID ORDINARY HIGH WATER MARK (OHWM) FIELD IDENTIFICATION DATA SHEET

The proponent agency is Headquarters USACE CECW-CO-R.

From Approved -
OMB No. 0710-0025
Expires: 01-31-2025

AGENCY DISCLOSURE NOTICE

The public reporting burden for this collection of information, 0710-OHWM, is estimated to average 30 **minutes** per response, including the time for reviewing instructions, searching existing data sources, gathering and maintaining the data needed, and completing and reviewing the collection of information. Send comments regarding the burden estimate or burden reduction suggestions to the Department of Defense, Washington Headquarters Services, at whs.mc-alex.esd.mbx.dd-dod-information-collections@mail.mil. Respondents should be aware that notwithstanding any other provision of law, no person shall be subject to any penalty for failing to comply with a collection of information if it does not display a currently valid OMB control number.

Project ID #:	Site Name: Cary Haas Bridge Repair	Date and Time: 3/17/2025 11am
Location (lat/long):	Investigator(s): Rose Ashbach, Brett Bell	

Step 1 Site overview from remote and online resources
Check boxes for online resources used to evaluate site:

- [X] gage data
- [ ] LiDAR
- [ ] geologic maps
- [X] climatic data
- [ ] satellite imagery
- [ ] land use maps
- [X] aerial photos
- [ ] topographic maps
- [ ] Other: _____

Describe land use and flow conditions from online resources. Were there any recent extreme events (floods or drought)?

flow depth @
24 hr rainfall total

Step 2 Site conditions during field assessment. First look for changes in channel shape, depositional and erosional features, and changes in vegetation and sediment type, size, density, and distribution. Make note of natural or man-made disturbances that would affect flow and channel form, such as bridges, riprap, landslides, rockfalls etc.

Step 3 Check the boxes next to the indicators used to identify the location of the OHWM.
OHWM is at a transition point, therefore some indicators that are used to determine location may be just below and above the OHWM. From the drop-down menu next to each indicator, select the appropriate location of the indicator by selecting either just below `b', at `x', or just above `a' the OHWM.
Go to page 2 to describe overall rationale for location of OHWM, write any additional observations, and to attach a photo log.

Geomorphic indicators

- [X] **Break in slope:** [▼]
  - [ ] *on the bank:* [▼]
  - [b] *undercut bank:* [▼]
  - [ ] *valley bottom:* [▼]
  - [ ] Other: _____
- [ ] **Shelving:**
  - [ ] *shelf at top of bank:*
  - [ ] *natural levee:*
  - [ ] *man-made berms or levees:*
  - [ ] *other berms:* _____
- [X] **Channel bar:**
  - [ ] *shelving (berms) on bar:*
  - [ ] *unvegetated:*
  - [ ] *vegetation transition (go to veg. indicators)*
  - [ ] *sediment transition (go to sed. indicators)*
  - [X] *upper limit of deposition on bar:*
- [ ] **Instream bedforms and other bedload transport evidence:**
  - [ ] *deposition bedload indicators (e.g., imbricated clasts, gravel sheets, etc.)*
  - [ ] *bedforms (e.g., pools, riffles, steps, etc.):*
  - [ ] *erosional bedload indicators (e.g., obstacle marks, scour, smoothing, etc.)*
- [ ] **Secondary channels:**

Sediment indicators

- [ ] **Soil development:**
- [ ] **Changes in character of soil:**
- [ ] **Mudcracks:**
- [ ] **Changes in particle-sized distribution:**
  - [ ] *transition from* _____ to _____
  - [ ] *upper limit of sand-sized particles*
  - [ ] *silt deposits:*

Vegetation Indicators

- [ ] **Change in vegetation type and/or density:**
  Check the appropriate boxes and select the general vegetation change *(e.g., graminoids to woody shrubs).* ***Describe the vegetation transition looking from the middle of the channel, up the banks, and into the floodplain.***
  - [ ] *vegetation absent to:*
  - [ ] *moss to:*
  - [ ] *forbs to:*
  - [ ] *graminoids to:*
  - [ ] *woody shrubs to:*
  - [ ] *deciduous trees to:*
  - [ ] *coniferous trees to:*
- [X] **Vegetation matted down and/or bent:** Cyperus + Rumex beat/flattened
- [X] **Exposed roots below intact soil layer:**

Ancillary indicators

- [X] **Wracking/presence of organic litter:**
- [ ] **Presence of large wood:**
- [X] **Leaf litter disturbed or washed away:**
- [ ] **Water staining:**
- [ ] **Weathered clasts or bedrock:**

Other observed indicators? Describe:

Print Form | Save As | E-mail

Project ID #: _____

Step 4 Is additional information needed to support this determination? ☐ Yes ☐ No If yes, describe and attach information to datasheet:

Step 5 Describe rationale for location of OHWM

Outside of active stream channel, on East bank, a defined shelf with leaf + organic matter deposits define OHWM. On the West bank, less pronounced shelf, ~~and~~ where flattened cyperus sp + rumex sp. vegetation transitions to undisturbed grasses, rumex, and epilobium sp. This transition defines OHWM

Additional observations or notes

Attach a photo log of the site. Use the table below, or attach separately.

Photo log attached? ☐ Yes ☐ No If no, explain why not: _____

List photographs and include descriptions in the table below.

Number photographs in the order that they are taken. Attach photographs and include annotations of features.

Photo Number	Photograph description

Attachment 4: Location Hydraulic Study Technical Memorandum for the Replacement of the Cary Drive-Haas Avenue Pedestrian Bridge over San Leandro Creek

Location Hydraulic Study Technical Memorandum for the Replacement of the Cary Drive-Haas Avenue Pedestrian Bridge over San Leandro Creek

Project Description

The City of San Leandro experienced a major storm event in March 2023, resulting in fallen trees along San Leandro Creek. Severe damage occurred to the 110-foot long, 7-foot wide single-span pedestrian bridge that connects Cary Drive and Haas Avenue. The bridge was demolished in 2024.

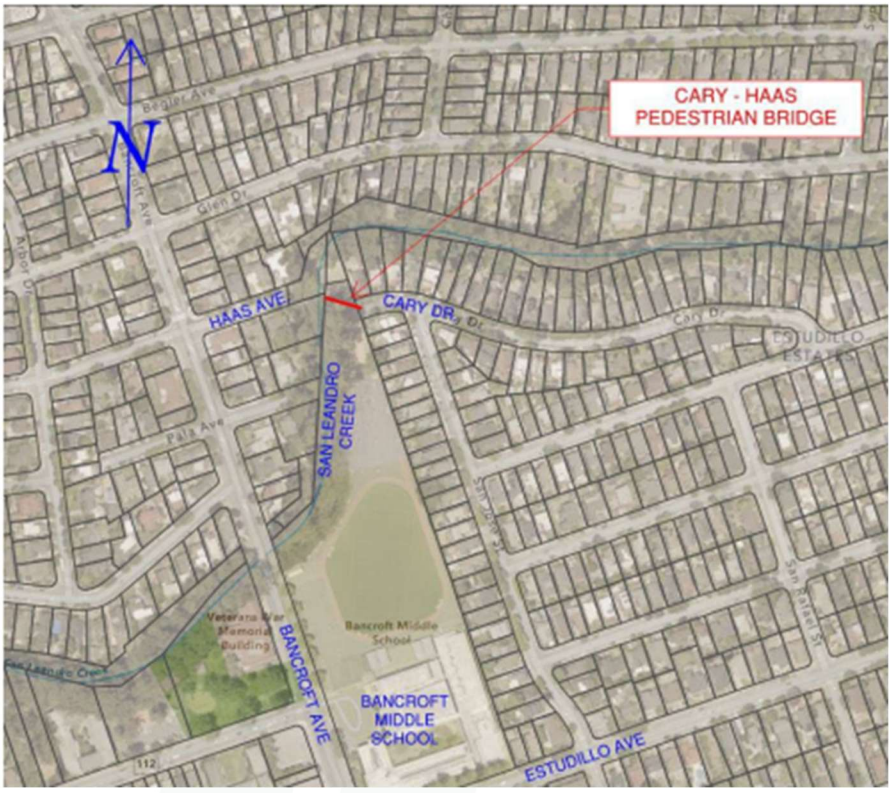

The superstructure will be replaced at the same location with a prefabricated weathering-steel truss pedestrian bridge with steel hand-railing and vertical pickets. Existing CIDH piles and abutments adjacent to the bridge approach will remain as part of the replacement bridge design. New micropiles may be required to be adjacent but not deeper than existing piles.

The Project includes formalization of standard width concrete sidewalks as ingress and egress at both ends of the bridge including ADA improvements to the existing sidewalk at Haas Avenue. The re-establishment of street lighting at the Cary Drive approach to the

bridge is included as well as determining the feasibility of additional lighting at the Haas Avenue bridge approach. No additional utilities are anticipated on or near the bridge.

Location Hydraulic Study as per 23 CFR 650 Subpart A, Section 650.111(b)(c)(d)

1. *National Flood Insurance Program (NFIP) maps or information developed by the highway agency, if NFIP maps are not available, are used to determine whether a highway location alternative will include an encroachment.*

The Project site is located on San Leandro Creek between Cary Drive and Haas Avenue. The channel is well defined with steep and heavily vegetated banks on both sides. This section of the creek is designated by FEMA as a Special Flood Hazard Area (SFHA) with coinciding 1% annual chance (100-year) regulatory floodway and flood fringe boundaries, as evidenced on the effective NFIP Flood Insurance Rate Map (FIRM) 06001C0257G, Panel 257 of 725, dated August 3, 2009, for 'Alameda County, California, and Incorporated Areas'. The creek channel is mapped Zone AE (riverine floodplain). Lands outside the creek banks are designated Zone X (out of the 1% annual chance floodplain). According to FEMA's Flood Map Service Center database, there are no current Preliminary or Pending flood map studies that include the project site.



The effective Flood Insurance Study (FIS) is titled "Flood Insurance Study, Volume 3 of 3, Alameda County California and Incorporated Areas: Revised Countywide FIS" and dated December 21, 2018. The bridge location is field surveyed as Cross Section O and 'Line P (San Leandro Creek)' on the FIRM Profile. The effective NFIP 1% annual chance base flood elevation is 53.3-feet NAVD 1988 datum.

FLOODING SOURCE		FLOODWAY			BASE FLOOD WATER SURFACE ELEVATION			
CROSS SECTION	DISTANCE[1]	WIDTH (FEET)	SECTION AREA (SQUARE FEET)	MEAN VELOCITY (FEET PER SECOND)	REGULATORY (FEET NAVD 88)	WITHOUT FLOODWAY (FEET NAVD 88)	WITH FLOODWAY (FEET NAVD 88)	INCREASE (FEET)
Line P (San Leandro Creek)								
A	8,098	95	522	5.4	15.2	15.2	15.7	0.5
B	9,445	177	1,024	2.7	19.1	19.1	20.1	1.0
C	10,100	481	1,060	2.6	19.9	19.9	20.9	1.0
D	10,900	79	681	4.1	26.0	26.0	26.6	0.6
E	11,900	77	709	4.0	28.5	28.5	29.2	0.7
F	13,888	54	521	5.4	33.2	33.2	34.0	0.8
G	14,392	135	1,048	2.7	35.2	35.2	35.6	0.4
H	15,500	69	652	4.3	39.7	39.7	39.9	0.2
I	16,350	43	322	8.7	41.6	41.6	41.8	0.2
J	16,760	68	977	2.9	44.7	44.7	44.9	0.2
K	18,000	76	1,033	2.7	45.5	45.5	46.5	1.0
L	19,250	65	830	3.4	46.3	46.3	47.2	0.9
M	20,300	61	686	4.1	47.2	47.2	47.9	0.7
N	21,580	67	600	4.7	49.0	49.0	49.5	0.5
O	22,347	65	463	6.1	53.3	53.3	54.3	1.0
P	23,500	54	517	5.4	57.4	57.4	57.6	0.2
Q	24,500	55	559	5.0	59.4	59.4	59.5	0.1

2. *Location studies also must include evaluation and discussion of the practicability of alternatives to any longitudinal encroachments.*

MNS has determined that it is not practical to explore project alternatives addressing longitudinal encroachment within the SFHA. The design purpose of the bridge is to enable pedestrians and cyclists to safely cross San Leandro Creek and its floodplain. The proposed crossing location is logical and cost-effective. The bridge will use the same alignment as existed previously and not alter connectivity between Cary Drive and Haas Avenue. The recommended design will not require land acquisition, physical alteration to the environment or encroachment upon adjacent private and municipal properties.

The 110-foot in length superstructure will clear span the full 30-foot width of the channel including the FEMA regulatory floodway and flood fringe (SFHA). Existing abutments will be reused and located outside the Regulatory Floodway and Zone AE floodplain. The 1% annual chance (100-year) base flood elevation is 53.3 feet NAVD 1988 which is approximately 15-feet below the proposed bottom chord of the truss. This ensures that there will be no-rise to existing flood heights, changes to FEMA-mapped floodway and

floodplain boundaries and flood zone designations, and an accommodated bulking factor for debris flows during future storm events.

3. *Location studies must include discussion of the following items, commensurate with the significance of the risk or environmental impact, for all alternatives containing encroachments and for those actions which would support base floodplain development:*

3(a) The risks associated with implementation of the action

The risks associated with the replacement 'like-for-like' clear span pedestrian bridge will be minimal to the SFHA, the environment and the surrounding residential neighborhood. The bridge truss bottom chord will be constructed at an elevation of at least approximately 68 feet NAVD 1988 which exceeds the FIRM and FIS base flood elevation by 15 feet. Existing abutments and piles will be reused and located outside of the SFHA limits. Any new piles would be located similarly. No alterations to surface drainage patterns are proposed. The asphalt concrete swale between Cary Drive and the bridge approach pathway will be replaced to ensure effective drainage. Proposed sidewalks and street lighting safety improvements will be out of the floodplain and vegetated channel corridor.

3(b) The impacts on natural and beneficial floodplain values

San Leandro Creek is considered state and federal waters under the jurisdiction of the US Army Corps of Engineers, Regional Water Quality Control Board, and the California Department of Fish and Wildlife. All bridge construction activity will occur outside the floodplain and riparian woodland channel corridor as well as outside of nesting season. MNS has determined that the proposed project will not have an adverse impact on the SFHA or the environment.

On March 12, 2025, MNS was informed by FEMA Region 9 staff (Oakland, CA) that a clear span design and bridge truss bottom chord elevation of at least approximately 15 feet above the base flood elevation (53.3 ft. NAVD 1988), should result in no adverse flooding impacts in the area during the 1% annual chance (100-year) storm event.

3(c) The support of probable incompatible floodplain development

The bridge design and intended passive recreation pedestrian/ cyclist use is considered compatible floodplain development.

3(d) The measures to minimize flood-plain impacts associated with the action

Refer to responses (2) and (3 a & b) above. Additionally, to verify that the project minimizes floodplain impacts and is compliant with the National Flood Insurance Program (NFIP) and the City's floodplain ordinance, MNS will prepare a FEMA Elevation Certificate at project completion. The city is currently a Class 8 FEMA Community Rating System Program (CRS) community, and the Certificate will assist in maintaining good standing in the Program.

3(e) The measures to restore and preserve the natural and beneficial floodplain values impacted by the action

San Leandro Creek is a FEMA designated SFHA and a riparian woodland feature identified in the National Wetlands Inventory (US Fish and Wildlife Service, 2024). As outlined in Subtask 2.1 of the project scope of work, MNS is conducting a Biological Resources and Jurisdictional Delineation Report which provides an assessment of potential wetland, aquatic, and terrestrial habitat present for special status species, mapping potentially jurisdictional aquatic features, and recommends mitigation measures for the protection of identified resources. Included will be recommendations for avoidance and minimization of impacts. MNS anticipates minimal disruption and impact to the natural and beneficial functions of the floodplain as construction activity will occur out of the floodplain and creek corridor.

4. Location studies must include evaluation and discussion of the practicability of alternatives to any significant encroachments or any support of incompatible floodplain development.

The project will not encroach the regulatory floodway and flood fringe (1% annual chance (100-year) floodplain). The replacement bridge will be 110-foot in length and clear span the 30-foot-wide floodway/ floodplain. The bridge truss bottom chord will be at least approximately 15 feet above the 53.3-feet NAVD 1988 base flood elevation. The design complies with the City's one foot freeboard requirement. Existing and new bridge abutments and piles will be located out of the floodway/ floodplain. The project represents a "replacement like-for-like", low-impact, and compatible floodplain development. Assessment of additional alternatives was not considered practicable.

5. The studies required by Sec. 650.111 (c) and (d) must be summarized in environmental review documents prepared pursuant to 23 CFR 771.

Pursuant to 23 CFR 771, the studies required by Sec. 650.111(c) and (d) of this Location Hydraulic Study are summarized in the EMC Planning Cary-Haas Pedestrian Bridge Biological Resource Evaluation report.

6. Local, state, and federal water resources and floodplain management agencies should be consulted to determine if the proposed highway action is consistent with existing watershed and floodplain management programs and to obtain current information on development and proposed actions in the affected watershed.

On March 11, 2025, MNS consulted with Mr. Michael Jeffery who is the Floodplain Administrator and Chief Building Official for the City of San Leandro. Mr. Jeffery concurred that constructing the pedestrian / cyclist bridge at the same location and alignment is the most logical and practicable design solution. The project is consistent with the City's adopted floodplain ordinance and regulations. San Leandro is a Class 8 FEMA Community Rating System Program (CRS) community, and the project is consistent with that Program's requirements.

Mr. Jeffery has no personal knowledge of past flooding events or damage at the project site other than minor bank scouring. The high-water mark has not exceeded half-way up the channel banks. There are no City reports of notable flooding events at the project site. Mr. Jeffrey recalled that approximately 1,000 feet downstream of the site, a homeowner lost a portion of the backyard during a past storm event but this was not attributed to the Cary-Haas pedestrian bridge.

On March 12, 2025, MNS consulted with FEMA Region 9 staff (Oakland, CA) Floodplain Management & Insurance Branch staff (Ms. Suzanne Sarpong, Mr. Carlos Rendo) and Risk Analysis Branch (Patrick Clancey). Staff advised that FEMA does not have any records of past flooding incidents at the project site. FEMA does not have specific NFIP requirements for pedestrian bridges in the SFHA. However, the design must ensure that there is no-rise to the effective base flood elevation and no change to the delineated limits of the regulatory floodway and flood fringe (SFHA). If either occurs, a FEMA Conditional Letter of Map Change / Letter of Map Change process would be required. The project must adhere to the City's adopted floodplain ordinance and all other applicable codes.

FEMA staff advised that provided the replacement bridge clear spans the full width of the FEMA delineated SFHA and the soffit elevation is above the effective base flood elevation

and the City's one-foot freeboard requirement, there should be no impact on the 100-year event.

On March 4, 2025, MNS consulted with Alameda County Flood Control & Water Conservation District who has jurisdiction for San Leandro Creek, including the project site. The District confirmed that their 2018 Hydrology and Hydraulics Manual is current. San Leandro Creek is a major flood control facility and its minimum design level for protection is 2,800 cfs.