Appendix A

Shiloh West Medical
Air Quality, Greenhouse Gas, and Energy Impact Study

MD Acoustics

April 22, 2024

Shiloh West Medical

Air Quality, Greenhouse Gas, and Energy Impact Study

City of Victorville, CA

Prepared for:

Ms. Julie Gilbert
ELMT Consulting, Inc.
2201 N Grand Ave, Ste #10098
Santa Ana, CA 92711

Prepared by:

MD Acoustics, LLC
Tyler Klassen, EIT
1197 Los Angeles Ave, Ste C-256
Simi Valley, CA 93065

Date: 4/22/2024

MD ACOUSTICS
Sound Solutions for Planning and Design

Noise Study Reports | Vibration Studies | Air Quality | Greenhouse Gas | Health Risk Assessments

P) AZ - 602.774.1950 P) CA - 805.426.4477 www.mdacoustics.com info@mdacoustics.com

TABLE OF CONTENTS

1.0 Introduction 1
1.1 Purpose of Analysis and Study Objectives 1
1.2 Project Summary 1
1.2.1 Site Location 1
1.2.2 Project Description 1
1.2.3 Sensitive Receptors 2
1.3 Executive Summary of Findings and Mitigation Measures 2

2.0 Regulatory Framework and Background 6
2.1 Air Quality Regulatory Setting 6
2.1.1 National and State 6
2.1.2 Mojave Desert Air Quality Management District 8
2.1.3 County of San Bernardino 11
2.1.3 City of Victorville 15
2.2 Greenhouse Gas Regulatory Setting 17
2.2.1 International 17
2.2.2 National 18
2.2.3 California 21
2.2.4 Mojave Desert Air Quality Management District 28
2.2.5 County of San Bernardino 29
2.2.6 City of Victorville 30

3.0 Setting 32
3.1 Existing Physical Setting 32
3.1.1 Local Climate and Meteorology 32
3.1.2 Local Air Quality 33
3.1.3 Attainment Status 35
3.2 Greenhouse Gases 36

4.0 Modeling Parameters and Assumptions 38
4.1 Construction 38
4.2 Operations 38

5.0 Thresholds of Significance 40
5.1 Air Quality Thresholds of Significance 40
5.1.1 CEQA Guidelines for Air Quality 40
5.1.2 Regional Significance Thresholds 40
5.2 Greenhouse Gas Thresholds of Significance 41
5.2.1 CEQA Guidelines for Greenhouse Gas 41

6.0 Air Quality Emissions Impact 42
6.1 Construction Air Quality Emissions Impact 42
6.1.1 Regional Construction Emissions 42
6.1.3 Odors 42

6.1.4 Construction-Related Toxic Air Contaminant Impact 42
6.2 Operational Air Quality Emissions Impact 43
6.2.1 Regional Operational Emissions 43
6.2.2 Operations-Related Toxic Air Contaminant Impacts 44
6.2.3 Operations-Related Odor Impacts 44
6.3 Cumulative Regional Air Quality Impacts 44
6.4 Air Quality Compliance 45

7.0 Greenhouse Gas Impact Analysis 47
7.1 Construction Greenhouse Gas Emissions Impact 47
7.2 Operational Greenhouse Gas Emissions Impact 47
7.3 Greenhouse Gas Plan Consistency 48
7.4 Cumulative Greenhouse Gas Impacts 49

8.0 Energy Analysis 51
8.1 Construction Energy Demand 51
8.1.1 Construction Equipment Electricity Usage Estimates 51
8.1.2 Construction Equipment Fuel Estimates 52
8.1.3 Construction Worker Fuel Estimates 53
8.1.4 Construction Vendor/Hauling Fuel Estimates 53
8.1.5 Construction Energy Efficiency/Conservation Measures 54
8.2 Operational Energy Demand 55
8.2.1 Transportation Fuel Consumption 55
8.2.2 Facility Energy Demands (Electricity and Natural Gas) 56
8.3 Renewable Energy and Energy Efficiency Plan Consistency 56

9.0 References 58

LIST OF APPENDICES

Appendix A:
CalEEMod Emissions Output

Appendix B:
City of Victorville Greenhouse Gas Emissions Screening Tables

Appendix C:
EMFAC2017 Output

LIST OF EXHIBITS

Exhibit A 4
Location Map 4

Exhibit B 5
Site Plan 5

LIST OF TABLES

Table 1: Land Use Summary 1
Table 2: Ambient Air Quality Standards 7
Table 3: MDAQMD Air Quality Significance Thresholds 28
Table 4: Meteorological Summary 33
Table 5: Local Area Air Quality Levels 34
Table 6: Attainment Status of MDAQMD[1] – Portion of Mojave Desert Air Basin 36
Table 7: Description of Greenhouse Gases 37
Table 8: Regional Significance - Construction Emissions 42
Table 9: Regional Significance - Operational Emissions 43
Table 10: Construction Greenhouse Gas Emissions 47
Table 11: Opening Year Project-Related Greenhouse Gas Emissions 48
Table 12: Project Construction Power Cost and Electricity Usage 51
Table 13: Construction Equipment Fuel Consumption Estimates 52
Table 14: Construction Worker Fuel Consumption Estimates 53
Table 15: Construction Vendor Fuel Consumption Estimates (MHD Trucks)[1] 54
Table 16: Construction Hauling Fuel Consumption Estimates (HHD Trucks)[1] 54

Table 17: Estimated Vehicle Operations Fuel Consumption 55

Table 18: Project Unmitigated Annual Operational Energy Demand Summary[1] 56

GLOSSARY OF TERMS

AQMP	Air Quality Management Plan
CAAQS	California Ambient Air Quality Standards
CARB	California Air Resources Board
CEQA	California Environmental Quality Act
CFCs	Chlorofluorocarbons
CH_4	Methane
CNG	Compressed natural gas
CO	Carbon monoxide
CO_2	Carbon dioxide
CO_2e	Carbon dioxide equivalent
DPM	Diesel particulate matter
GHG	Greenhouse gas
HFCs	Hydrofluorocarbons
MDAB	Mojave Desert Air Basin
MDAQMD	Mojave Desert Air Quality Management District
$MTCO_2e$	Metric tons of carbon dioxide equivalent
$MMTCO_2e$	Million metric tons of carbon dioxide equivalent
NAAQS	National Ambient Air Quality Standards
NOx	Nitrogen Oxides
NO_2	Nitrogen dioxide
N_2O	Nitrous oxide
O_3	Ozone
PFCs	Perfluorocarbons
PM	Particle matter
PM10	Particles that are less than 10 micrometers in diameter
PM2.5	Particles that are less than 2.5 micrometers in diameter
PMI	Point of maximum impact
PPM	Parts per million
PPB	Parts per billion
RTIP	Regional Transportation Improvement Plan
RTP	Regional Transportation Plan
SF_6	Sulfur hexafluoride
SIP	State Implementation Plan
SOx	Sulfur Oxides
SRA	Source/Receptor Area
TAC	Toxic air contaminants
VOC	Volatile organic compounds
WRCC	Western Regional Climate Center

1.0 Introduction

1.1 Purpose of Analysis and Study Objectives

This air quality and greenhouse gas (GHG) analysis was prepared to evaluate whether the estimated criteria pollutants and GHG emissions generated from the project would cause a significant impact to the air resources in the project area. This assessment was conducted within the context of the California Environmental Quality Act (CEQA, California Public Resources Code Sections 21000, et seq.). The assessment is consistent with the methodology and emission factors endorsed by Mojave Desert Air Quality Management District (MDAQMD), California Air Resource Board (CARB), and the United States Environmental Protection Agency (US EPA).

1.2 Project Summary

1.2.1 Site Location

The project site is on 3 acres located on parcels 3103-561-19 and 20 on the north side of Palmdale Road in Victorville, California, as shown in Exhibit A. Per the City's General Plan Land Use & Zoning Districts map, the current land use zoning district is Commercial Neighborhood Retail/Service (C-1) and the land uses surrounding the project site are commercial with the exception of the land use to the north which is zoned planned urban development and residential. The project's proposed use is a medical office building.

1.2.2 Project Description

The Project proposes to develop the site two medical office buildings. Phase A will be a 10,111 -square foot building with 6,267 square feet of medical office space, a 1,156-square foot lab, a 1,260-square foot pharmacy, and a 1,279-square foot coffee shop with 149 square feet of common area. Phase B will be a 20,729-square foot medical office building. The site will have 160 parking spaces and cover approximately 3 acres.

Construction activities within the Project area will consist of site preparation, on-site grading, building, paving, and architectural coating. Table 1 summarizes the land use description for the Project Site.

Table 1: Land Use Summary

Land Use	Unit Amount	Size Metric
Medical Office Building	28.301	Thousand SF
Pharmacy/Drugstore w/o Drive Thru	1.260	Thousand SF
Fast Food Restaurant with Drive Thru	1.279	Thousand SF
Parking Lot	160	Spaces

1.2.3 Sensitive Receptors

Sensitive receptors are considered land uses or other types of population groups that are more sensitive to air pollution than others due to their exposure. Sensitive population groups include children, the elderly, the acutely and chronically ill, and those with cardio-respiratory diseases. For CEQA purposes, a sensitive receptor would be a location where a sensitive individual could remain for 24-hours or longer, such as residencies, hospitals, and schools (etc.).

The closest existing sensitive receptors (to the site area) are the residential land uses located approximately 780 feet south across Palmdale Road.

1.3 Executive Summary of Findings and Mitigation Measures

The following is a summary of the analysis results:

Construction-Source Emissions
Project construction-source emissions would not exceed applicable regional thresholds of significance established by the MDAQMD.

As discussed herein, the project will comply with all applicable MDAQMD construction-source emission reduction rules and guidelines. Project construction source emissions would not cause or substantively contribute to violation of the California Ambient Air Quality Standards (CAAQS) or National Ambient Air Quality Standards (NAAQS).

Established requirements addressing construction equipment operations, and construction material use, storage, and disposal requirements act to minimize odor impacts that may result from construction activities. Moreover, construction-source odor emissions would be temporary, short-term, and intermittent in nature and would not result in persistent impacts that would affect substantial numbers of people. Potential construction-source odor impacts are therefore considered less-than-significant.

Operational-Source Emissions
The project's emissions meet MDAQMD regional thresholds and will not result in a significant cumulative impact. The project does not propose any such uses or activities that would result in potentially significant operational-source odor impacts. Potential operational-source odor impacts are therefore considered less-than significant.

Project-related GHG emissions meet the MDAQMD and County of San Bernardino thresholds and are also considered to be less than significant. The project also complies with the goals of the CARB Scoping Plan, AB-32, SB-32 and County of San Bernardino Greenhouse Gas Emissions Reduction Plan.

Mitigation Measures

A. Construction Measures

The project applicant shall ensure that all applicable MDAQMD Rules and Regulations are complied with during construction.

No construction measures are required.

B. Operational Measures to Reduce GHG Emissions

No operational measures are required.

Exhibit A
Location Map

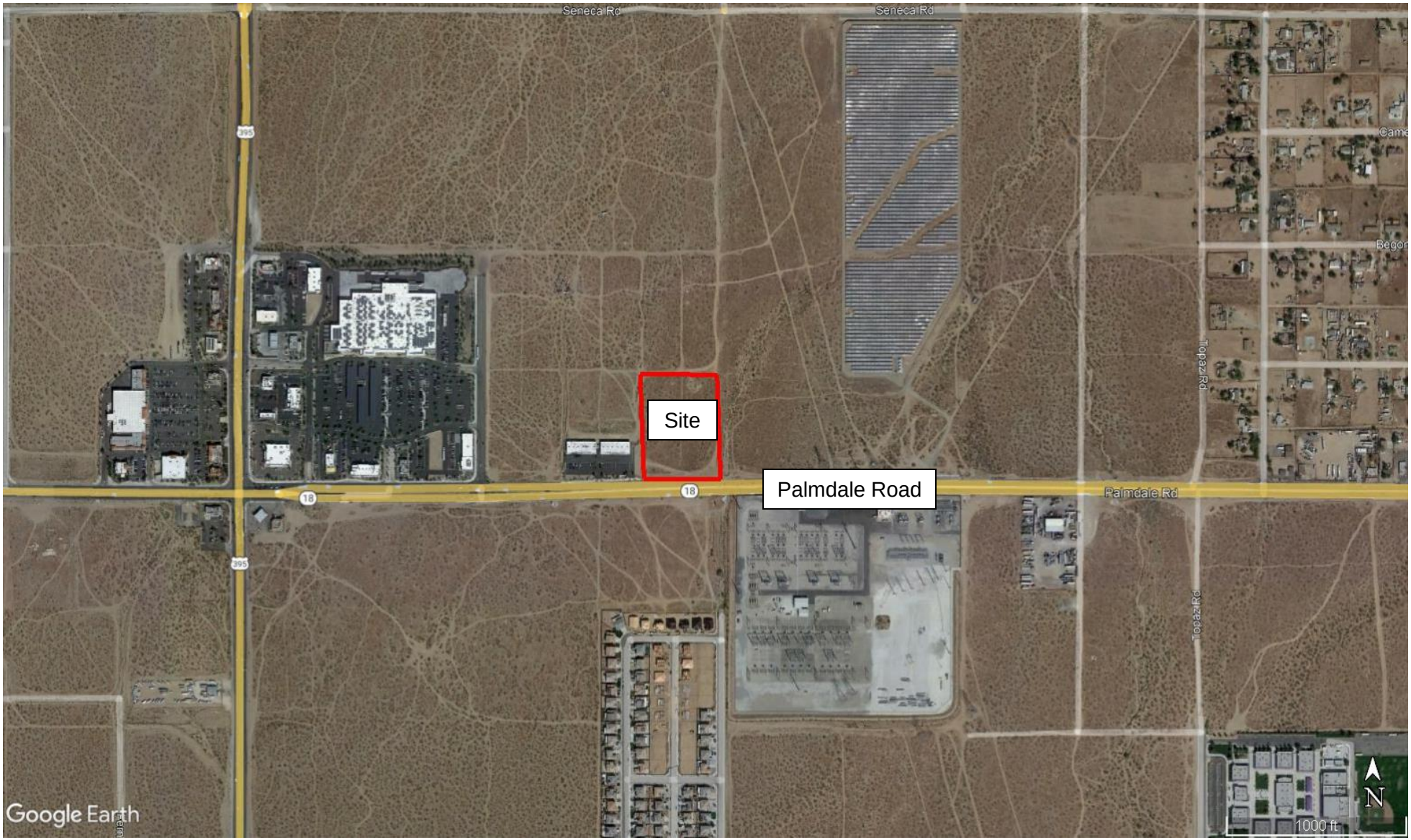

Exhibit B

Site Plan

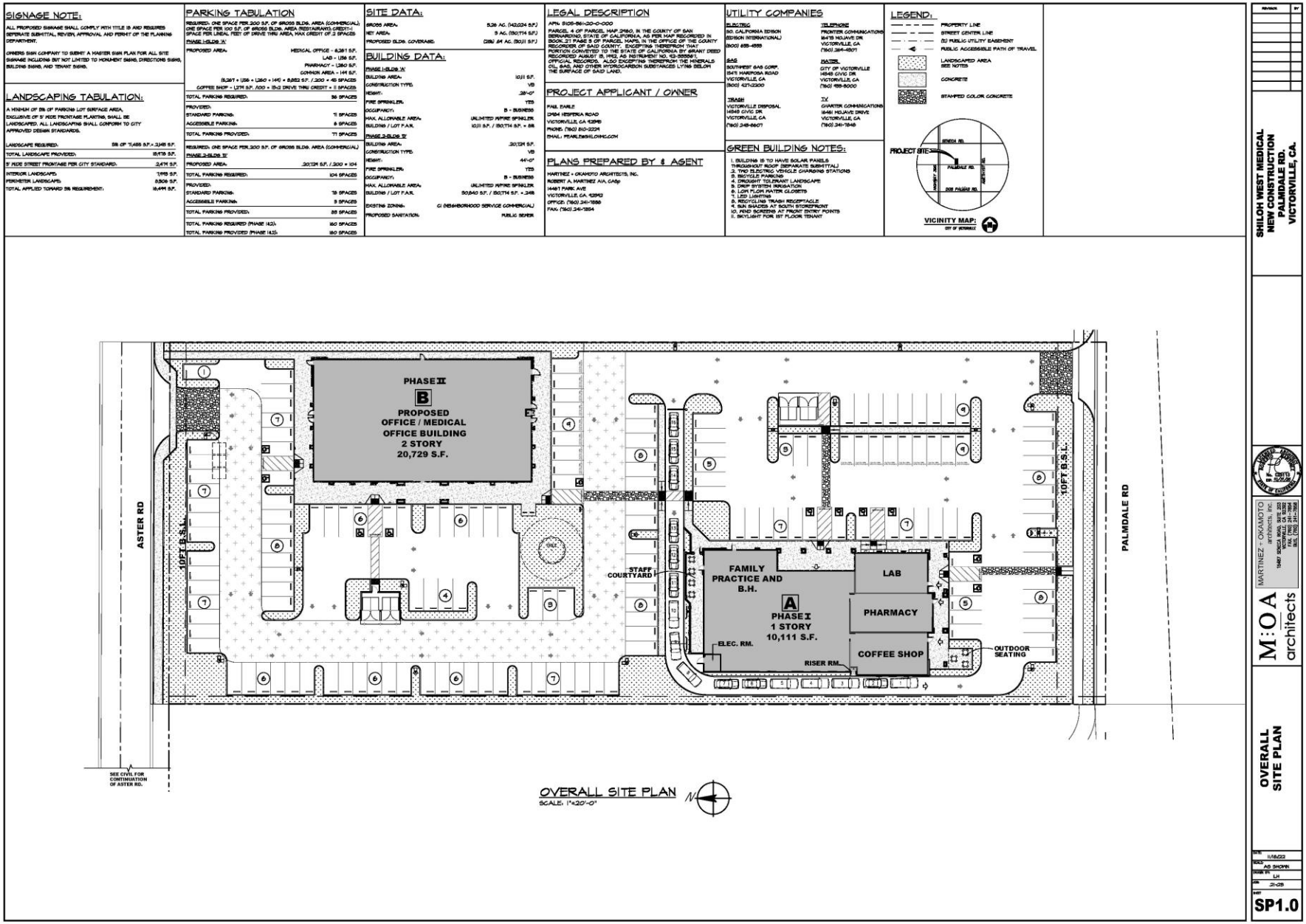

2.0 Regulatory Framework and Background

2.1 Air Quality Regulatory Setting

Air pollutants are regulated at the national, state, and air basin level; each agency has a different level of regulatory responsibility. The United States Environmental Protection Agency (EPA) regulates at the national level. The California Air Resources Board (ARB) regulates at the state level. The Mojave Desert Air Quality Management District (MDAQMD) regulates at the air basin level.

2.1.1 National and State

The EPA is responsible for global, international, and interstate air pollution issues and policies. The EPA sets national vehicle and stationary source emission standards, oversees approval of all State Implementation Plans, provides research and guidance for air pollution programs, and sets National Air Quality Standards, also known as federal standards. There are six common air pollutants, called criteria pollutants, which were identified from the provisions of the Clean Air Act of 1970.

- Ozone
- Nitrogen Dioxide
- Lead
- Particulate Matter (PM10 and PM2.5)
- Carbon Monoxide
- Particulate Matter
- Sulfur Dioxide

The federal standards were set to protect public health, including that of sensitive individuals; thus, the standards continue to change as more medical research is available regarding the health effects of the criteria pollutants. Primary federal standards are the levels of air quality necessary, with an adequate margin of safety, to project the public health.

A State Implementation Plan is a document prepared by each state describing existing air quality conditions and measures that will be followed to attain and maintain federal standards. The State Implementation Plan for the State of California is administered by the ARB, which has overall responsibility for statewide air quality maintenance and air pollution prevention. California's State Implementation Plan incorporates individual federal attainment plans for regional air districts—air district prepares their federal attainment plan, which sent to ARB to be approved and incorporated into the California State Implementation Plan. Federal attainment plans include the technical foundation for understanding air quality (e.g., emission inventories and air quality monitoring), control measures and strategies, and enforcement mechanisms. See http://www.arb.ca.gov/research/aaqs/aaqs.htm for additional information on criteria pollutants and air quality standards.

The federal and state ambient air quality standards are summarized in Table 2 and can also be found at http://www.arb.ca.gov/research/aaqs/aaqs2.pdf.

Table 2: Ambient Air Quality Standards

Pollutant	Averaging Time	California Standards[1]		National Standards[2]		
		Concentrations[3]	Method[4]	Primary[3,5]	Secondary[3,6]	Method[7]
Ozone (O3)	1-Hour	0.09 ppm	Ultraviolet Photometry	- -	Same as Primary Standard	Ultraviolet Photometry
	8-Hour	0.070 ppm		0.070 ppm (147 µg/m³)		
Respirable Particulate Matter (PM10)[8]	24-Hour	50 µg/m³	Gravimetric or Beta Attenuation	150 µ/m³	Same as Primary Standard	Inertial Separation and Gravimetric Analysis
	Annual Arithmetic Mean	20 µg/m³		- -		
Fine Particulate Matter (PM2.5)[8]	24-Hour	- -	- -	35 µg/m³	Same as Primary Standard	Inertial Separation and Gravimetric Analysis
	Annual Arithmetic Mean	12 µg/m³	Gravimetric or Beta Attenuation	12 µg/m³	15 µg/m³	
Carbon Monoxide (CO)	1-Hour	20 ppm (23 µg/m³)	Non-Dispersive Infrared Photometry (NDIR)	35 ppm (40 µg/m³)	- -	Non-Dispersive Infrared Photometry (NDIR)
	8-Hour	9.0 ppm (10 µg/m³)		9 ppm (10 µg/m³)	- -	
	8-Hour (Lake Tahoe)	6 ppm (7 µg/m³)		- -	- -	
Nitrogen Dioxide (NO_2)[9]	1-Hour	0.18 ppm (339 µg/m³)	Gas Phase Chemiluminescence	100 ppb (188 µg/m³)	- -	Gas Phase Chemiluminescence
	Annual Arithmetic Mean	0.030 ppm (357 µg/m³)		0.053 ppm (100 µg/m³)	Same as Primary Standard	
Sulfur Dioxide (SO_2)[10]	1-Hour	0.25 ppm (655 µg/m³)	Ultraviolet Fluorescence	75 ppb (196 µg/m³)	- -	Ultraviolet Fluorescence; Spectrophotometry (Pararosaniline Method)
	3-Hour	- -		- -	0.5 ppm (1300 mg/m³)	
	24-Hour	0.04 ppm (105 µg/m³)		0.14 ppm (for certain areas)[10]	- -	
	Annual Arithmetic Mean	- -		0.130ppm (for certain areas)[10]	- -	
Lead[11,12]	30 Day Average	1.5 µg/m³	Atomic Absorption	- -		
	Calendar Qrtr	- -		1.5 µg/m³ (for certain areas)[12]	Same as Primary Standard	High Volume Sampler and Atomic Absorption
	Rolling 3-Month Average	- -		0.15 µg/m³		
Visibility Reducing Particles[13]	8-Hour	See footnote 13	Beta Attenuation and Transmittance through Filter Tape	No National Standards		
Sulfates	24-Hour	25 µg/m³	Ion Chromatography			
Hydrogen Sulfide	1-Hour	0.03 ppm (42 µg/m³)	Ultraviolet Fluorescence			
Vinyl Chloride[11]	24-Hour	0.01 ppm (26 µg/m³)	Gas Chromatography			

Notes:

1. California standards for ozone, carbon monoxide (except 8-hour Lake Tahoe), sulfur dioxide (1 and 24 hour), nitrogen dioxide, and particulate matter (PM10, PM2.5, and visibility reducing particles), are values that are not to be exceeded. All others are not to be equaled or exceeded. California ambient air quality standards are listed in the Table of Standards in Section 70200 of Title 17 of the California Code of Regulations.

2. National standards (other than ozone, particulate matter, and those based on annual arithmetic mean) are not to be exceeded more than once a year. The ozone standard is attained when the fourth highest 8-hour concentration measured at each site in a year, averaged over three years, is equal to or less than the standard. For PM10, the 24 hour standard is attained when the expected number of days per calendar year with a 24-hour average concentration above 150 µg/m³ is equal to or less than one. For PM2.5, the 24 hour standard is attained when 98 percent of the daily concentrations, averaged over three years, are equal to or less than the standard. Contact the U.S. EPA for further clarification and current national policies.

3. Concentration expressed first in units in which it was promulgated. Equivalent units given in parentheses are based upon a reference temperature of 25°C and a reference pressure of 760 torr. Most measurements of air quality are to be corrected to a reference temperature of 25°C and a reference pressure of 760 torr; ppm in this table refers to ppm by volume, or micromoles of pollutant per mole of gas.

4. Any equivalent measurement method which can be shown to the satisfaction of the ARB to give equivalent results at or near the level of the air quality standard may be used.

5. National Primary Standards: The levels of air quality necessary, with an adequate margin of safety to protect the public health.

6. National Secondary Standards: The levels of air quality necessary to protect the public welfare from any known or anticipated adverse effects of a pollutant.

7. Reference method as described by the U.S. EPA. An “equivalent method” of measurement may be used but must have a “consistent relationship to the reference method” and must be approved by the U.S. EPA.

8. On December 14, 2012, the national annual PM2.5 primary standard was lowered from 15 µg/m^3 to 12.0 µg/m^3. The existing national 24-hour PM2.5 standards (primary and secondary) were retained at 35 µg/m^3, as was the annual secondary standard of 15 µg/m^3. The existing 24-hour PM10 standards (primary and secondary) of 150 µg/m^3 also were retained. The form of the annual primary and secondary standards is the annual mean, averaged over 3 years.

9. To attain the 1-hour national standard, the 3-year average of the annual 98th percentile of the 1-hour daily maximum concentrations at each site must not exceed 100 ppb. Note that the national 1-hour standard is in units of parts per billion (ppb). California standards are in units of parts per million (ppm). To directly compare the national 1-hour standard to the California standards the units can be converted from ppb to ppm. In this case, the national standard of 100 ppb is identical to 0.100 ppm.

10. On June 2, 2010, a new 1-hour SO2 standard was established and the existing 24-hour and annual primary standards were revoked. To attain the 1-hour national standard, the 3-year average of the annual 99th percentile of the 1-hour daily maximum concentrations at each site must not exceed 75 ppb. The 1971 SO2 national standards (24-hour and annual) remain in effect until one year after an area is designated for the 2010 standard, except that in areas designated nonattainment for the 1971 standards, the 1971 standards remain in effect until implementation plans to attain or maintain the 2010 standards are approved.

    Note that the 1-hour national standard is in units of parts per billion (ppb). California standards are in units of parts per million (ppm). To directly compare the 1-hour national standard to the California standard the units can be converted to ppm. In this case, the national standard of 75 ppb is identical to 0.075 ppm.

11. The ARB has identified lead and vinyl chloride as 'toxic air contaminants' with no threshold level of exposure for adverse health effects determined. These actions allow for the implementation of control measures at levels below the ambient concentrations specified for these pollutants.

12. The national standard for lead was revised on October 15, 2008 to a rolling 3-month average. The 1978 lead standard (1.5 µg/m^3 as a quarterly average) remains in effect until one year after an area is designated for the 2008 standard, except that in areas designated nonattainment for the 1978 standard, the 1978 standard remains in effect until implementation plans to attain or maintain the 2008 standard are approved.

13. In 1989, the ARB converted both the general statewide 10-mile visibility standard and the Lake Tahoe 30-mile visibility standard to instrumental equivalents, which are "extinction of 0.23 per kilometer" and "extinction of 0.07 per kilometer" for the statewide and Lake Tahoe Air Basin standards, respectively.

Several pollutants listed in Table 2 are not addressed in this analysis. Analysis of lead is not included in this report because the project is not anticipated to emit lead. Visibility-reducing particles are not explicitly addressed in this analysis because particulate matter is addressed. The project is not expected to generate or be exposed to vinyl chloride because proposed project uses do not utilize the chemical processes that create this pollutant and there are no such uses in the project vicinity. The proposed project is not expected to cause exposure to hydrogen sulfide because it would not generate hydrogen sulfide in any substantial quantity.

2.1.2 Mojave Desert Air Quality Management District

The 1976 Lewis Air Quality Management Act established the MDAQMD and other air districts throughout the State. The federal CAA Amendments of 1977 required that each state adopt an implementation plan outlining pollution control measures to attain the federal standards in nonattainment areas of the state.

The ARB is responsible for incorporating air quality management plans for local air basins into a State Implementation Plan (SIP) for EPA approval. Significant authority for air quality control within them has been given to local air districts that regulate stationary source emissions and develop local nonattainment plans.

California is divided geographically into air basins for the purpose of managing the air resources of the State on a regional basis. An air basin generally has similar meteorological and geographic conditions throughout. The State is currently divided into 15 air basins. The proposed project site is located within

the Mojave Desert Air Basin (MDAB). The MDAQMD includes the desert portion of the San Bernardino County. The MDAQMD is responsible for controlling emissions primarily from stationary sources within the MDAQMD and also maintains air quality monitoring stations to document historical and current levels of air quality within the District. The MDAQMD is also responsible for developing, updating, and implementing the Ozone Attainment Plan (MDAQMD 2004) which establishes a plan to implement, maintain, and enforce a program of emission control measures to attain and maintain the federal ozone air quality standards. Attainment plans prepared by the various air pollution control districts throughout the state are used to develop the SIP for the State of California. The proposed project is located within the MDAQMD and, thus, is subject to the rules and regulations of the MDAQMD.

The MDAQMD and SCAG are responsible for formulating and implementing the air quality attainment plan (AQAP) for the Basin. Regional AQAPs were adopted in 1991, 1994, and 1997. The following SIP and AQAP are the currently approved plans for the Basin region:

- 1997 SIP for O_3, PM10, and NO_2
- 1995 Mojave Desert Planning Area Federal PM10 Attainment Plan; no formal action by the EPA

The MDAQMD completed the MDAQMD 2004 Ozone Attainment Plan (State and federal) in April 2004, which has been approved by the EPA.

The MDAQMD is downwind of the Los Angeles basin and the San Joaquin Valley. Prevailing winds transport ozone and ozone precursors from both regions into and through the MDAB during the summer ozone season. These transport couplings have been officially recognized by the CARB. Local MDAQMD emissions contribute to exceedances of both the NAAQS and CAAQS for ozone, but photochemical ozone modeling conducted by the MDAQMD and CARB indicates that the MDAB would be in attainment of both standards without the influence of this transported air pollution from upwind regions. Therefore, emissions reductions in the upwind area are critical to the attainment demonstration.

The following includes, but is not limited to, the MDAQMD rules that are applicable to the proposed project:

Rule 201 (Permit to Construct) requires written authorization to build, erect, install, alter, or replace any equipment, the use of which may cause the issuance of air contaminants or the use of which may eliminate, reduce, or control the issuance of air contaminants. With respect to the proposed project, this rule would apply to any stationary equipment that is not otherwise exempt from this rule as an insignificant source of air pollutants (see Rule 219).

Rule 203 (Permit to Operate) requires written authorization to operate any equipment, the use of which may cause the issuance of air pollutants, or the use of which may reduce or control the issuance of air contaminants. With respect to the proposed project, this rule would apply to any stationary equipment that is not otherwise exempt from this rule as an insignificant source of air pollutants (see Rule 219).

Rule 219 (Equipment Not Requiring A Written Permit Pursuant to Regulation II) specifies stationary sources that the MDAQMD considers to be insignificant sources of air pollutants that are exempt from

Rules 201 and 202. With respect to the proposed project, the following sources would be exempt from permit requirements:

- Comfort air conditioning or ventilating systems which are not designed or used to remove air contaminants generated by, or released from, specific equipment units;
- Space heaters;
- Equipment used exclusively for steam cleaning;

Rule 402 (Nuisance). This rule specifies that a person may not discharge from any source whatsoever such quantities of air contaminants or other material which cause injury, detriment, nuisance, or annoyance to any considerable number of persons or to the public, or which endanger the comfort, repose, health, or safety of any such persons or the public, or which cause, or have a natural tendency to cause, injury or damage to business or property.

Rule 403.2 (Fugitive Dust Control for the Mojave Desert Planning Area). This rule requires owners or operators of a construction or demolition fugitive dust source to implement the fugitive dust control measures listed in Rule 403.2. These measures include periodic watering for short-term stabilization of disturbed surface area to minimize visible dust emissions, stabilization of graded surfaces if no development is planned within 30 days, reducing non-essential earth moving activity under high wind conditions, and more. In addition, for sites over 100 acres such as the proposed project, the control measures in Rule 403.2 must also be implemented. The additional control measures include preparing and submitting a dust control plan to the MDAQMD prior to commencing earth-moving activities. The dust control plan must describe all applicable dust control measures that will be implemented at the project site. Other additional control measures to minimize visible fugitive dust for sites over 100 acres include stabilizing access routes, maintaining natural topography to the extent possible, and constructing paved roads and parking lots first where feasible.

Rule 1113 (Architectural Coatings). This rule requires manufacturers, distributors, and end-users of architectural and industrial maintenance coatings to reduce VOC emissions from the use of these coatings, primarily by placing limits on the VOC content of various coating categories.

Rule 1160 (Internal Combustion Engines). This rule establishes limits for VOC, NOx, and CO emissions associated with stationary internal combustion engines. However, the provisions of the rule do not apply to the following engines:

- All internal combustion engines rated at less than 500 brake horsepower;
- All internal combustion engines operated less than 100 hours within any continuous four consecutive calendar quarter period; and
- Emergency internal combustion engines.

Regulation XIII (New Source Review). For new and modified stationary sources subject to permitting requirements (see Rule 201), this series of rules prescribes the use of Best Available Control Technology and the provision of emission offsets (i.e., mitigation) for equipment whose emissions exceed specified

thresholds. The applicability of these requirements would be determined upon submittal of an application for permit to construct under Rule 201.

2.1.3 County of San Bernardino

County of San Bernardino General Plan

Local jurisdictions, such as the County of San Bernardino, have the authority and responsibility to reduce air pollution through its police power and decision-making authority. Specifically, the County is responsible for the assessment and mitigation of air emissions resulting from its land use decisions. The County is also responsible for the implementation of transportation control measures as outlined in the 2016 AQMP and MDAQMD Attainment Plans. Examples of such measures include bus turnouts, energy-efficient streetlights, and synchronized traffic signals. In accordance with CEQA requirements and the CEQA review process, the County assesses the air quality impacts of new development projects, requires mitigation of potentially significant air quality impacts by conditioning discretionary permits, and monitors and enforces implementation of such mitigation.

In accordance with the CEQA requirements, the County does not, however, have the expertise to develop plans, programs, procedures, and methodologies to ensure that air quality within the County and region will meet federal and state standards. Instead, the County relies on the expertise of the SCAQMD and MDAQMD and utilizes the SCAQMD CEQA Handbook and MDAQMD California Environmental Quality Act (CEQA) And Federal Conformity Guidelines (depending on the location/jurisdiction of the project) as guidance documents for the environmental review of plans and development proposals within its jurisdiction.

The County of San Bernardino General Plan contains the following air quality-related goals and policies that are applicable to the proposed project:

Goal CO 4 The County will ensure good air quality for its residents, businesses, and visitors to reduce impacts on human health and the economy.

CO 4.1 Because developments can add to the wind hazard (due to increased dust, the removal of wind breaks, and other factors), the County will require either as mitigation measures in the appropriate environmental analysis required by the County for the development proposal or as conditions of approval if no environmental document is required, that developments in areas identified as susceptible to wind hazards to address site-specific analysis of:

a. Grading restrictions and/or controls on the basis of soil types, topography or season.
b. Landscaping methods, plant varieties, and scheduling to maximize successful revegetation.

c. Dust-control measures during grading, heavy truck travel, and other dust generating activities.

CO 4.2 Coordinate air quality improvement technologies with the South Coast Air Quality Management District (SCAQMD) and the Mojave Desert Air Quality Management District (MDAQMD) to improve air quality through reductions in pollutants from the region.

CO 4.4 Because congestion resulting from growth is expected to result in a significant increase in the air quality degradation, the County may manage growth by insuring the timely provision of infrastructure to serve new development.

Programs

1. Consistent with the land use designations in the Land Use Policy Map (see the Land Use Element) that will improve growth management at a sub-regional level in relation to major activity centers, review new development to encourage new intensified development around transit nodes and along transit corridors.

2. Locate and design new development in a manner that will minimize direct and indirect emission of air contaminants through such means as:

    a. Promoting mixed-use development to reduce the length and frequency of vehicle trips;
    b. Providing for increased intensity of development along existing and proposed transit corridors; and
    c. Providing for the location of ancillary employee services (including but not limited to child care, restaurants, banking facilities, convenience markets) at major employment centers for the purpose of reducing midday vehicle trips.
    d. The County shall comply, to the extent feasible, with the recommendations on siting new sensitive land uses, as recommended in California Air Resources Board's Air Quality and Land Use Handbook: A Community Health Perspective, which includes the following:

    Notable siting recommendations include avoiding siting new sensitive land uses within:

    - 500 feet of a freeway, urban roads with 100,000 vehicles/day, or rural roads with 50,000 vehicles/day;

- 1,000 feet of a distribution center (that accommodates more than 100 trucks per day, more than 40 trucks with operating transport refrigeration units per day, or where transport refrigeration units exceed 300 hours per week);
- 1,000 feet of a chrome plater;
- 300 feet of any dry cleaning operation; and 300 feet of a large gas station (defined as a facility with a through put of 3.6 million gallons per year or greater); a 50 foot separation is recommended for typical gas dispensing facilities.

3. Incorporate phasing policies and requirements in the General Plan and development plans to achieve timely provision of infrastructure (particularly transportation facilities) to serve development through:

    a. Tying growth to Level of Service (LOS) standards; and
    b. Using phasing areas to manage growth.

County of San Bernardino Development Code

83.01.040 - Air Quality.

(a) **Equipment permit and Inspection Requirements.** Required permits shall be obtained from either the Mojave Air Pollution Management District or the South Coast Air Quality Management District depending on the location of the subject property and equipment for equipment that may cause air pollution. Before the equipment may be constructed, plans and specifications shall be submitted to the appropriate District for approval.

(b) **Permits from Air Quality Management Districts.** Permits shall be obtained from either the Mojave Air Pollution Management District or the South Coast Air Quality Management District depending on the location of the subject property and equipment. If requested by the Director, uses, activities, or processes that require Air Quality Management District approval to operate shall file a copy of the permit with the Department within 30 days of its approval.

(c) **Diesel Exhaust Emissions Control Measures.** The following emissions control measures shall apply to all discretionary land use projects approved by the County on or after January 15, 2009:

1. **On-Road Diesel Vehicles.** On-road diesel vehicles are regulated by the State of California Air Resources Board.

2. **Off-Road Diesel Vehicle/Equipment Operations.** All business establishments and contractors that use off-road diesel vehicle/equipment as part of their normal business

operations shall adhere to the following measures during their operations in order to reduce diesel particulate matter emissions from diesel fueled engines:

a. Off-road vehicles/equipment shall not be left idling on site for periods in excess of five minutes. The idling limit does not apply to:

    i. Idling when queuing,
    ii. Idling to verify that the vehicle is in safe operating condition,
    iii. Idling for testing, servicing, repairing, or diagnostic purposes,
    iv. Idling necessary to accomplish work for which the vehicle was designed (such as operating a crane),
    v. Idling required to bring the machine system to operating temperature, and
    vi. Idling necessary to ensure safe operation of the vehicle

b. Use reformulated ultra-low sulfur diesel fuel in equipment and use equipment certified by the U.S. Environmental Protection Agency (EPA) or that pre-dates EPA regulations.
c. Maintain engines in good working order to reduce emissions.
d. Signs shall be posted requiring vehicle drivers to turn off engines when parked.
e. Any requirements or standards subsequently adopted by the South Coast Air Quality Management District, the Mojave Air Quality Management District, or the California Air Resources Board.
f. Provide temporary traffic control during all phases of construction.
g. Onsite electrical power connections shall be provided for electric construction tools to eliminate the need for diesel-powered electric generators, where feasible.
h. Maintain construction equipment engines in good working order to reduce emissions. The developer shall have each contractor certify that all construction equipment is properly serviced and maintained in good operating condition.
i. Contractors shall use ultra-low sulfur diesel fuel for stationary construction equipment as required by Air Quality Management District (AQMD) Rules 431.1 and 431.2 to reduce the release of undesirable emissions.
j. Substitute electric and gasoline-powered equipment for diesel-powered equipment, where feasible.

2. **Project Design.** Distribution centers, warehouses, truck stops and other facilities with loading docks where diesel trucks may reside overnight or for periods in excess of three hours shall be designed to enable any vehicle using these facilities to utilize on-site electrical connections to power the heating and air conditioning of the cabs of such trucks, instead of operating the diesel engines and diesel refrigeration units of

such trucks and trailers for these purposes. This requirement shall also apply to Recreational Vehicle Parks (as defined in Section 810.01.200(k) of this title) and other development projects where diesel engines may reasonably be expected to operate on other than an occasional basis.

2.1.3 City of Victorville

City of Victorville General Plan

The City of Victorville General Plan contains the following greenhouse gas related policies and programs that are applicable to the proposed project:

Goal #6: Good Air Quality Promote clear air with low pollutant concentrations that do not adversely affect respiratory health

Objective 6.1 Contribute to regional air quality plan attainment

Policy 6.1.1 Encourage planning and development activities, that reduce the number and length of single occupant automobile trips

Implementation Measure 6.1.1.2 Require dust abatement actions for all new construction and redevelopment projects.

Implementation Measure 6.1.1.3 Maintain parking standards that encourage and facilitate alternative transportation modes, including reduced parking standards for transit-oriented developments, mixed-use developments, and preferential parking for carpoolers.

Objective 6.2 Reduce health risks associated with air pollution

Policy 6.2.1 Encourage compliance with the California Air Resources Board (CARB) "Air Quality and Land Use Handbook: A Community Health Perspective", which provides guidelines for siting new sensitive land uses in proximity to air pollutant emitting sources

Implementation Measure 6.2.1.1 Avoid siting new sensitive land uses within 500 feet of a freeway, urban roads with 100,000 vehicles/day, or rural roads with 50,000 vehicles/day.

Implementation Measure 6.2.1.2 Avoid siting new sensitive land uses within 1,000 feet of a distribution center (that accommodates more than 100 trucks per day, more than 40 trucks with operating transport refrigeration units [TRUs] per day, or where TRU operations exceed 300 hours per week).

Implementation Measure 6.2.1.3 Avoid siting new sensitive land uses within 1,000 feet of a major service and maintenance rail yard.

Implementation Measure 6.2.1.4 Avoid siting new sensitive land uses within 300 feet of any dry cleaning operation. For operations with two or more machines, provide 500 feet. For operations with three or more machines, consult with the Mojave Desert Air District prior to placement.

Implementation Measure 6.2.1.5 Avoid siting new sensitive land uses within 300 feet of a large gas station (defined as a facility with a throughput of 3.6 million gallons per year or greater). A 50 foot separation is recommended for typical gas dispensing facilities.

2.2 Greenhouse Gas Regulatory Setting

2.2.1 International

Many countries around the globe have made an effort to reduce GHGs since climate change is a global issue.

Intergovernmental Panel on Climate Change. In 1988, the United Nations and the World Meteorological Organization established the Intergovernmental Panel on Climate Change to assess the scientific, technical and socio-economic information relevant to understanding the scientific basis of risk of human-induced climate change, its potential impacts, and options for adaptation and mitigation.

United Nations. The United States participates in the United Nations Framework Convention on Climate Change (UNFCCC) (signed on March 21, 1994). Under the Convention, governments gather and share information on greenhouse gas emissions, national policies, and best practices; launch national strategies for addressing greenhouse gas emissions and adapting to expected impacts, including the provision of financial and technological support to developing countries; and cooperate in preparing for adaptation to the impacts of climate change.

The 2014 UN Climate Change Conference in Lima Peru provided a unique opportunity to engage all countries to assess how developed countries are implementing actions to reduce emissions.

Kyoto Protocol. The Kyoto Protocol is a treaty made under the UNFCCC and was the first international agreement to regulate GHG emissions. It has been estimated that if the commitments outlined in the Kyoto Protocol are met, global GHG emissions could be reduced by an estimated 5 percent from 1990 levels during the first commitment period of 2008 – 2012 (UNFCCC 1997). On December 8, 2012, the Doha Amendment to the Kyoto Protocol was adopted. The amendment includes: New commitments for Annex I Parties to the Kyoto Protocol who agreed to take on commitments in a second commitment period from 2013 – 2020; a revised list of greenhouse gases (GHG) to be reported on by Parties in the second commitment period; and Amendments to several articles of the Kyoto Protocol which specifically referenced issues pertaining to the first commitment period and which needed to be updated for the second commitment period.

The Paris Agreement. The Paris Agreement became effective on November 4, 2016. Thirty days after this date at least 55 Parties to the United Nations Framework Convention on Climate Change (Convention), accounting in total for at least an estimated 55 % of the total global greenhouse gas emissions, had deposited their instruments of ratification, acceptance, approval or accession with the Depositary.

The Paris Agreement built upon the Convention and – for the first time – attempted to bring all nations into a common cause to undertake ambitious efforts to combat climate change and adapt to its effects, with enhanced support to assist developing countries to do so. As such, it charts a new course in the global climate effort.

The Paris Agreement's central aim is to strengthen the global response to the threat of climate change by keeping a global temperature rise this century well below 2 degrees Celsius above pre-industrial levels and to pursue efforts to limit the temperature increase even further to 1.5 degrees Celsius. Additionally, the agreement aims to strengthen the ability of countries to deal with the impacts of climate change. To reach these ambitious goals, appropriate financial flows, a new technology framework and an enhanced capacity building framework will be put in place, thus supporting action by developing countries and the most vulnerable countries, in line with their own national objectives. The Agreement also provides for enhanced transparency of action and support through a more robust transparency framework.

2.2.2 National

Greenhouse Gas Endangerment. On December 2, 2009, the EPA announced that GHGs threaten the public health and welfare of the American people. The EPA also states that GHG emissions from on-road vehicles contribute to that threat. The decision was based on *Massachusetts v. EPA* (Supreme Court Case 05-1120) which argued that GHGs are air pollutants covered by the Clean Air Act and that the EPA has authority to regulate those emissions.

Clean Vehicles. Congress first passed the Corporate Average Fuel Economy law in 1975 to increase the fuel economy of cars and light duty trucks. The law has become more stringent over time. On May 19, 2009, President Obama put in motion a new national policy to increase fuel economy for all new cars and trucks sold in the United States. On April 1, 2010, the EPA and the Department of Transportation's National Highway Safety Administration announced a joint final rule establishing a national program that would reduce greenhouse gas emissions and improve fuel economy for new cars and trucks sold in the United States.

The first phase of the national program would apply to passenger cars, light-duty trucks, and medium-duty passenger vehicles, covering model years 2012 through 2016. They require these vehicles to meet an estimated combined average emissions level of 250 grams of carbon dioxide per mile, equivalent to 35.5 miles per gallon if the automobile industry were to meet this carbon dioxide level solely through fuel economy improvements. Together, these standards would cut carbon dioxide emissions by an estimated 960 million metric tons and 1.8 billion barrels of oil over the lifetime of the vehicles sold under the program (model years 2012-2016). The second phase of the national program would involve proposing new fuel economy and greenhouse gas standards for model years 2017 – 2025 by September 1, 2011.

On October 25, 2010, the EPA and the U.S. Department of Transportation proposed the first national standards to reduce greenhouse gas emissions and improve fuel efficiency of heavy-duty trucks and buses. For combination tractors, the agencies are proposing engine and vehicle standards that begin in the 2014 model year and achieve up to a 20 percent reduction in carbon dioxide emissions and fuel consumption by the 2018 model year. For heavy-duty pickup trucks and vans, the agencies are proposing separate gasoline and diesel truck standards, which phase in starting in the 2014 model year and achieve up to a 10 percent reduction for gasoline vehicles and 15 percent reduction for diesel vehicles by 2018 model year (12 and 17 percent respectively if accounting for air conditioning leakage). Lastly, for

vocational vehicles, the agencies are proposing engine and vehicle standards starting in the 2014 model year which would achieve up to a 10 percent reduction in fuel consumption and carbon dioxide emissions by 2018 model year.

Issued by NHTSA and EPA in March 2020 (published on April 30, 2020 and effective after June 29, 2020), the Safer Affordable Fuel-Efficient Vehicles Rule would maintain the CAFE and CO2 standards applicable in model year 2020 for model years 2021 through 2026. The estimated CAFE and CO2 standards for model year 2020 are 43.7 mpg and 204 grams of CO2 per mile for passenger cars and 31.3 mpg and 284 grams of CO2 per mile for light trucks, projecting an overall industry average of 37 mpg, as compared to 46.7 mpg under the standards issued in 2012. This Rule also excludes CO2- equivalent emission improvements associated with air conditioning refrigerants and leakage (and, optionally, offsets for nitrous oxide and methane emissions) after model year 2020.[1]

Mandatory Reporting of Greenhouse Gases. On January 1, 2010, the EPA started requiring large emitters of heat-trapping emissions to begin collecting GHG data under a new reporting system. Under the rule, suppliers of fossil fuels or industrial greenhouse gases, manufacturers of vehicles and engines, and facilities that emit 25,000 metric tons or more per year of greenhouse gas emissions are required to submit annual reports to the EPA.

Climate Adaption Plan. The EPA Plan identifies priority actions the Agency will take to incorporate considerations of climate change into its programs, policies, rules and operations to ensure they are effective under future climatic conditions. The following link provides more information on the EPA Plan: https://www.epa.gov/arc-x/planning-climate-change-adaptation

Energy Independence Security Act

The Energy Independence and Security Act of 2007 (EISA) facilitates the reduction of national GHG emissions by requiring the following:

- Increasing the supply of alternative fuel sources by setting a mandatory Renewable Fuel Standard (RFS) that requires fuel producers to use at least 36 billion gallons of biofuel in 2022;
- Prescribing or revising standards affecting regional efficiency for heating and cooling products, procedures for new or amended standards, energy conservation, energy efficiency labeling for consumer electronic products, residential boiler efficiency, electric motor efficiency, and home appliances;
- Requiring approximately 25 percent greater efficiency for light bulbs by phasing out incandescent light bulbs between 2012 and 2014; requiring approximately 200 percent greater efficiency for light bulbs, or similar energy savings, by 2020; and

[1] National Highway Traffic Safety Administration (NHTSA) and U.S. Environmental Protection Agency (USEPA), 2018. Federal Register / Vol. 83, No. 165 / Friday, August 24, 2018 / Proposed Rules, The Safer Affordable Fuel-Efficient (SAFE) Vehicles Rule for Model Years 2021–2026 Passenger Cars and Light Trucks 2018. Available at: https://www.gpo.gov/fdsys/pkg/FR-2018-08-24/pdf/2018-16820.pdf.

- While superseded by the USEPA and NHTSA actions described above, (i) establishing miles per gallon targets for cars and light trucks and (ii) directing the NHTSA to establish a fuel economy program for medium- and heavy-duty trucks and create a separate fuel economy standard for trucks.
- Additional provisions of EISA address energy savings in government and public institutions, promote research for alternative energy, additional research in carbon capture, international energy programs, and the creation of green jobs.[2]

Executive Order 13432

In response to the Massachusetts v. Environmental Protection Agency ruling, the President signed Executive Order 13432 on May 14, 2007, directing the USEPA, along with the Departments of Transportation, Energy, and Agriculture, to initiate a regulatory process that responds to the Supreme Court's decision. Executive Order 13432 was codified into law by the 2009 Omnibus Appropriations Law signed on February 17, 2009. The order sets goals in the areas of energy efficiency, acquisition, renewable energy, toxics reductions, recycling, sustainable buildings, electronics stewardship, fleets, and water conservation. Light-Duty Vehicle Greenhouse Gas and Corporate Average Fuel Economy Standards.

On May 19, 2009, President Obama announced a national policy for fuel efficiency and emissions standards in the United States auto industry. The adopted federal standard applies to passenger cars and light-duty trucks for model years 2012 through 2016. The rule surpasses the prior Corporate Average Fuel Economy standards (CAFE)[3] and requires an average fuel economy standard of 35.5 miles per gallon (mpg) and 250 grams of CO2 per mile by model year 2016, based on USEPA calculation methods. These standards were formally adopted on April 1, 2010. In August 2012, standards were adopted for model year 2017 through 2025 for passenger cars and light-duty trucks. By 2025, vehicles are required to achieve 54.5 mpg (if GHG reductions are achieved exclusively through fuel economy improvements) and 163 grams of CO2 per mile. According to the USEPA, a model year 2025 vehicle would emit one-half of the GHG emissions from a model year 2010 vehicle.[4] In 2017, the USEPA recommended no change to the GHG standards for light-duty vehicles for model years 2022-2025.

In August 2018, the USEPA and NHTSA proposed the Safer Affordable Fuel-Efficient Vehicles Rule that would, if adopted, maintain the CAFE and CO2 standards applicable in model year 2020 for model years

[2] A green job, as defined by the United States Department of Labor, is a job in business that produces goods or provides services that benefit the environment or conserve natural resources.
[3] The Corporate Average Fuel Economy standards are regulations in the United States, first enacted by Congress in 1975, to improve the average fuel economy of cars and light trucks. The U.S Department of Transportation has delegated the National Highway Traffic Safety Administration as the regulatory agency for the Corporate Average Fuel Economy standards.

[4] United States Environmental Protection Agency, EPA and NHTSA Set Standards to Reduce Greenhouse Gases and Improve Fuel Economy for Model Years 2017-2025 Cars and Light Trucks, August 2012, https://nepis.epa.gov/ Exe/ZyPDF.cgi/P100EZ7C.PDF?Dockey=P100EZ7C.PDF.

2021 through 2026. The estimated CAFE and CO2 standards for model year 2020 are 43.7 mpg and 204 grams of CO2 per mile for passenger cars and 31.3 mpg and 284 grams of CO2 per mile for light trucks, projecting an overall industry average of 37 mpg, as compared to 46.7 mpg under the standards issued in 2012. The proposal, if adopted, would also exclude CO2- equivalent emission improvements associated with air conditioning refrigerants and leakage (and, optionally, offsets for nitrous oxide and methane emissions) after model year 2020.[5]

2.2.3 California

California Code of Regulations (CCR) Title 24, Part 6. CCR Title 24, Part 6: California's Energy Efficiency Standards for Residential and Nonresidential Buildings (Title 24) were first established in 1978 in response to a legislative mandate to reduce California's energy consumption. The standards are updated periodically to allow consideration and possible incorporation of new energy efficiency technologies and methods. Although it was not originally intended to reduce GHG emissions, electricity production by fossil fuels results in GHG emissions and energy efficient buildings require less electricity. Therefore, increased energy efficiency results in decreased GHG emissions.

The Energy Commission adopted 2008 Standards on April 23, 2008 and Building Standards Commission approved them for publication on September 11, 2008. These updates became effective on August 1, 2009. 2013 and 2016 standards have been approved and became effective July 1, 2014 and January 1, 2016, respectively. 2022 standards were published July 1, 2022 and became effective January 1, 2023.

California Code of Regulations (CCR) Title 24, Part 11. All buildings for which an application for a building permit is submitted on or after January 1, 2023, must follow the 2022 standards. Energy efficient buildings require less electricity; therefore, increased energy efficiency reduces fossil fuel consumption and decreases greenhouse gas emissions. The following links provide more information on Title 24, Part 11:
https://www.dgs.ca.gov/BSC/Codes
https://www.energy.ca.gov/programs-and-topics/programs/building-energy-efficiency-standards/2022-building-energy-efficiency

California Green Building Standards. On January 12, 2010, the State Building Standards Commission unanimously adopted updates to the California Green Building Standards Code, which went into effect on January 1, 2011. The Housing and Community Development (HCD) updated CALGreen through the 2015 Triennial Code Adoption Cycle, during the 2016 to 2017 fiscal year. During the 2022-2023 fiscal year, the Department of Housing and Community Development (HCD) updated CALGreen through the 2023 Triennial Code Adoption Cycle.

[5] National Highway Traffic Safety Administration (NHTSA) and U.S. Environmental Protection Agency (USEPA), 2018. Federal Register / Vol. 83, No. 165 / Friday, August 24, 2018 / Proposed Rules, The Safer Affordable Fuel-Efficient (SAFE) Vehicles Rule for Model Years 2021–2026 Passenger Cars and Light Trucks 2018. Available at https://www.gpo.gov/fdsys/pkg/FR-2018-08-24/pdf/2018-16820.pdf.

The Code is a comprehensive and uniform regulatory code for all residential, commercial and school buildings. CCR Title 24, Part 11: California Green Building Standards (Title 24) became effective in 2001 in response to continued efforts to reduce GHG emissions associated with energy consumption. CCR Title 24, Part 11 now require that new buildings reduce water consumption, employ building commissioning to increase building system efficiencies, divert construction waste from landfills, and install low pollutant-emitting finish materials. One focus of CCR Title 24, Part 11 is water conservation measures, which reduce GHG emissions by reducing electrical consumption associated with pumping and treating water. CCR Title 24, Part 11 has approximately 52 nonresidential mandatory measures and an additional 130 provisions for optional use. Some key mandatory measures for commercial occupancies include specified parking for clean air vehicles, a 20 percent reduction of potable water use within buildings, a 50 percent construction waste diversion from landfills, use of building finish materials that emit low levels of volatile organic compounds, and commissioning for new, nonresidential buildings over 10,000 square feet.

The CEC estimates that over 30 years the 2022 Energy Code will provide $1.5 billion in consumer benefits and reduce 10 million metric tons of GHG. Changes compared to the 2019 Energy Code include increases to on-site renewable energy generation from solar, increases to electric load flexibility to support grid reliability, reduction of emissions from newly constructed buildings, reduction of air pollution for improved public health, and increased adoption of environmentally beneficial efficient electric technologies.

The California Green Building Standards Code does not prevent a local jurisdiction from adopting a more stringent code as state law provides methods for local enhancements. The Code recognizes that many jurisdictions have developed existing construction and demolition ordinances, and defers to them as the ruling guidance provided, they provide a minimum 50-percent diversion requirement. The code also provides exemptions for areas not served by construction and demolition recycling infrastructure. State building code provides the minimum standard that buildings need to meet in order to be certified for occupancy. Enforcement is generally through the local building official. The following link provides more on CalGreen Building Standards:
http://www.bsc.ca.gov/Home/CALGreen.aspx

Executive Order S-3-05. California Governor issued Executive Order S-3-05, GHG Emission, in June 2005, which established the following targets:

- By 2010, California shall reduce greenhouse gas emissions to 2000 levels;
- By 2020, California shall reduce greenhouse gas emissions to 1990 levels.
- By 2050, California shall reduce greenhouse gas emissions to 80 percent below 1990 levels.

The executive order directed the secretary of the California Environmental Protection Agency (CalEPA) to coordinate a multi-agency effort to reduce GHG emissions to the target levels. To comply with the Executive Order, the secretary of CalEPA created the California Climate Action Team (CAT), made up of members from various state agencies and commissions. The team released its first report in March

2006. The report proposed to achieve the targets by building on the voluntary actions of businesses, local governments, and communities and through State incentive and regulatory programs.

Executive Order S-01-07. Executive Order S-1-07 was issued in 2007 and proclaims that the transportation sector is the main source of GHG emissions in the State, since it generates more than 40 percent of the State's GHG emissions. It establishes a goal to reduce the carbon intensity of transportation fuels sold in the State by at least ten percent by 2020. This Order also directs CARB to determine whether this Low Carbon Fuel Standard (LCFS) could be adopted as a discrete early-action measure as part of the effort to meet the mandates in AB 32.

On April 23, 2009 CARB approved the proposed regulation to implement the low carbon fuel standard and began implementation on January 1, 2011. The low carbon fuel standard is anticipated to reduce GHG emissions by about 16 MMT per year by 2020. CARB approved some amendments to the LCFS in December 2011, which were implemented on January 1, 2013. In September 2015, the Board approved the re-adoption of the LCFS, which became effective on January 1, 2016, to address procedural deficiencies in the way the original regulation was adopted. In 2018, the Board approved amendments to the regulation, which included strengthening and smoothing the carbon intensity benchmarks through 2030 in-line with California's 2030 GHG emission reduction target enacted through SB 32, adding new crediting opportunities to promote zero emission vehicle adoption, alternative jet fuel, carbon capture and sequestration, and advanced technologies to achieve deep decarbonization in the transportation sector.

The LCFS is designed to encourage the use of cleaner low-carbon transportation fuels in California, encourage the production of those fuels, and therefore, reduce GHG emissions and decrease petroleum dependence in the transportation sector. Separate standards are established for gasoline and diesel fuels and the alternative fuels that can replace each. The standards are "back-loaded", with more reductions required in the last five years, than the first five years. This schedule allows for the development of advanced fuels that are lower in carbon than today's fuels and the market penetration of plug-in hybrid electric vehicles, battery electric vehicles, fuel cell vehicles, and flexible fuel vehicles. It is anticipated that compliance with the low carbon fuel standard will be based on a combination of both lower carbon fuels and more efficient vehicles.

Reformulated gasoline mixed with corn-derived ethanol at ten percent by volume and low sulfur diesel fuel represent the baseline fuels. Lower carbon fuels may be ethanol, biodiesel, renewable diesel, or blends of these fuels with gasoline or diesel as appropriate. Compressed natural gas and liquefied natural gas also may be low carbon fuels. Hydrogen and electricity, when used in fuel cells or electric vehicles are also considered as low carbon fuels for the low carbon fuel standard.

SB 97. Senate Bill 97 (SB 97) was adopted August 2007 and acknowledges that climate change is a prominent environmental issue that requires analysis under CEQA. SB 97 directed the Governor's Office of Planning and Research (OPR), which is part of the State Resource Agency, to prepare, develop, and transmit to CARB guidelines for the feasible mitigation of GHG emissions or the effects of GHG emissions,

as required by CEQA, by July 1, 2009. The Resources Agency was required to certify and adopt those guidelines by January 1, 2010.

Pursuant to the requirements of SB 97 as stated above, on December 30, 2009 the Natural Resources Agency adopted amendments to the state CEQA guidelines that address GHG emissions. The CEQA Guidelines Amendments changed 14 sections of the CEQA Guidelines and incorporate GHG language throughout the Guidelines. However, no GHG emissions thresholds of significance are provided and no specific mitigation measures are identified. The GHG emission reduction amendments went into effect on March 18, 2010 and are summarized below:

- Climate action plans and other greenhouse gas reduction plans can be used to determine whether a project has significant impacts, based upon its compliance with the plan.
- Local governments are encouraged to quantify the greenhouse gas emissions of proposed projects, noting that they have the freedom to select the models and methodologies that best meet their needs and circumstances. The section also recommends consideration of several qualitative factors that may be used in the determination of significance, such as the extent to which the given project complies with state, regional, or local GHG reduction plans and policies. OPR does not set or dictate specific thresholds of significance. Consistent with existing CEQA Guidelines, OPR encourages local governments to develop and publish their own thresholds of significance for GHG impacts assessment.
- When creating their own thresholds of significance, local governments may consider the thresholds of significance adopted or recommended by other public agencies, or recommended by experts.
- New amendments include guidelines for determining methods to mitigate the effects of greenhouse gas emissions in Appendix F of the CEQA Guidelines.
- OPR is clear to state that “to qualify as mitigation, specific measures from an existing plan must be identified and incorporated into the project; general compliance with a plan, by itself, is not mitigation.”
- OPR’s emphasizes the advantages of analyzing GHG impacts on an institutional, programmatic level. OPR therefore approves tiering of environmental analyses and highlights some benefits of such an approach.
- Environmental impact reports (EIRs) must specifically consider a project's energy use and energy efficiency potential.

AB 32. The California State Legislature enacted AB 32, the California Global Warming Solutions Act of 2006. AB 32 requires that greenhouse gases emitted in California be reduced to 1990 levels by the year 2020. “Greenhouse gases” as defined under AB 32 include carbon dioxide, methane, nitrous oxide, hydrofluorocarbons, perfluorocarbons, and sulfur hexafluoride. ARB is the state agency charged with monitoring and regulating sources of greenhouse gases. AB 32 states the following:

Global warming poses a serious threat to the economic well-being, public health, natural resources, and the environment of California. The potential adverse impacts of global warming include the exacerbation of air quality problems, a reduction in the quality and supply of water to the state from the Sierra snowpack, a rise in sea levels resulting in the displacement of thousands of coastal businesses and

residences, damage to marine ecosystems and the natural environment, and an increase in the incidences of infectious diseases, asthma, and other human health-related problems.

The ARB Board approved the 1990 greenhouse gas emissions level of 427 million metric tons of carbon dioxide equivalent (MMTCO2e) on December 6, 2007 (California Air Resources Board 2007). Therefore, emissions generated in California in 2020 are required to be equal to or less than 427 MMTCO2e. Emissions in 2020 in a "business as usual" scenario are estimated to be 596 MMTCO2e.

Under AB 32, the ARB published its Final Expanded List of Early Action Measures to Reduce Greenhouse Gas Emissions in California. Discrete early action measures are currently underway or are enforceable by January 1, 2010. The ARB has 44 early action measures that apply to the transportation, commercial, forestry, agriculture, cement, oil and gas, fire suppression, fuels, education, energy efficiency, electricity, and waste sectors. Of these early action measures, nine are considered discrete early action measures, as they are regulatory and enforceable by January 1, 2010. The ARB estimates that the 44 recommendations are expected to result in reductions of at least 42 MMTCO2e by 2020, representing approximately 25 percent of the 2020 target.

The ARB's Climate Change Scoping Plan (Scoping Plan) contains measures designed to reduce the State's emissions to 1990 levels by the year 2020 (California Air Resources Board 2008). The Scoping Plan identifies recommended measures for multiple greenhouse gas emission sectors and the associated emission reductions needed to achieve the year 2020 emissions target—each sector has a different emission reduction target. Most of the measures target the transportation and electricity sectors. As stated in the Scoping Plan, the key elements of the strategy for achieving the 2020 greenhouse gas target include:

- Expanding and strengthening existing energy efficiency programs as well as building and appliance standards;
- Achieving a statewide renewables energy mix of 33 percent;
- Developing a California cap-and-trade program that links with other Western Climate Initiative partner programs to create a regional market system;
- Establishing targets for transportation-related greenhouse gas emissions for regions throughout California and pursuing policies and incentives to achieve those targets;
- Adopting and implementing measures pursuant to existing State laws and policies, Including California's clean car standards, goods movement measures, and the Low Carbon Fuel Standard; and
- Creating targeted fees, including a public goods charge on water use, fees on high global warming potential gases, and a fee to fund the administrative costs of the State's long-term commitment to AB 32 implementation.

In addition, the Scoping Plan differentiates between "capped" and "uncapped" strategies. "Capped" strategies are subject to the proposed cap-and-trade program. The Scoping Plan states that the inclusion of these emissions within the cap-and trade program will help ensure that the year 2020 emission targets are met despite some degree of uncertainty in the emission reduction estimates for any individual

measure. Implementation of the capped strategies is calculated to achieve a sufficient amount of reductions by 2020 to achieve the emission target contained in AB 32. "Uncapped" strategies that will not be subject to the cap-and-trade emissions caps and requirements are provided as a margin of safety by accounting for additional greenhouse gas emission reductions.[4]

Senate Bill 100. Senate Bill 100 (SB 100) requires 100 percent of total retail sales of electricity in California to come from eligible renewable energy resources and zero-carbon resources by December 31, 2045. SB 100 was adopted September 2018.

The interim thresholds from prior Senate Bills and Executive Orders would also remain in effect. These include Senate Bill 1078 (SB 1078), which requires retail sellers of electricity, including investor-owned utilities and community choice aggregators, to provide at least 20 percent of their supply from renewable sources by 2017. Senate Bill 107 (SB 107) which changed the target date to 2010. Executive Order S-14-08, which was signed on November 2008 and expanded the State's Renewable Energy Standard to 33 percent renewable energy by 2020. Executive Order S-21-09 directed the CARB to adopt regulations by July 31, 2010 to enforce S-14-08. Senate Bill X1-2 codifies the 33 percent renewable energy requirement by 2020.

Senate Bill 350. Signed into law October 7, 2015, SB 350 increases California's renewable electricity procurement goal from 33 percent by 2020 to 50 percent by 2030. This will increase the use of Renewables Portfolio Standard (RPS) eligible resources, including solar, wind, biomass, geothermal, and others. In addition, SB 350 requires the state to double statewide energy efficiency savings in electricity and natural gas end uses by 2030. To help ensure these goals are met and the greenhouse gas emission reductions are realized, large utilities will be required to develop and submit Integrated Resource Plans (IRPs). These IRPs will detail how each entity will meet their customers resource needs, reduce greenhouse gas emissions and ramp up the deployment of clean energy resources.

SB 375. Senate Bill 375 (SB 375) was adopted September 2008 and aligns regional transportation planning efforts, regional GHG emission reduction targets, and land use and housing allocation. SB 375 requires Metropolitan Planning Organizations (MPO) to adopt a sustainable communities strategy (SCS) or alternate planning strategy (APS) that will prescribe land use allocation in that MPOs Regional Transportation Plan (RTP). CARB, in consultation with each MPO, will provide each affected region with reduction targets for GHGs emitted by passenger cars and light trucks in the region for the years 2020 and 2035. These reduction targets will be updated every eight years but can be updated every four years if advancements in emissions technologies affect the reduction strategies to achieve the targets. CARB is also charged with reviewing each MPO's sustainable communities strategy or alternate planning strategy for consistency with its assigned targets.

The proposed project is located within the Southern California Association of Governments (SCAG), which has authority to develop the SCS or APS. For the SCAG region, the targets set by CARB are at eight percent below 2005 per capita GHG emissions levels by 2020 and 13 percent below 2005 per capita GHG emissions levels by 2035. On April 4, 2012, SCAG adopted the 2012-2035 Regional Transportation Plan / Sustainable Communities Strategy (RTP/SCS), which meets the CARB emission reduction requirements.

On September 3, 2020, SCAG's Regional Council approved and fully adopted the Connect SoCal (2020–2045 Regional Transportation Plan/Sustainable Communities Strategy), and the addendum to the Connect SoCal Program Environmental Impact Report. Connect SoCal is a long-range visioning plan that builds upon and expands land use and transportation strategies established over several planning cycles to increase mobility options and achieve a more sustainable growth pattern. Connect SoCal outlines more than $638 billion in transportation system investments through 2045. Connect SoCal is supported by a combination of transportation and land use strategies that help the region achieve state greenhouse gas emission reduction goals and federal Clean Air Act requirements, preserve open space areas, improve public health and roadway safety, support our vital goods movement industry and utilize resources more efficiently. By integrating the Forecasted Development Pattern with a suite of financially constrained transportation investments, Connect SoCal can reach the regional target of reducing greenhouse gases, or GHGs, from autos and light-duty trucks by 8 percent per capita by 2020, and 19 percent by 2035 (compared to 2005 levels).

City and County land use policies, including General Plans, are not required to be consistent with the RTP and associated SCS or APS. However, new provisions of CEQA would incentivize, through streamlining and other provisions, qualified projects that are consistent with an approved SCS or APS and categorized as "transit priority projects."

Senate Bill X7-7. Senate Bill X7-7 (SB X7-7), enacted on November 9, 2009, mandates water conservation targets and efficiency improvements for urban and agricultural water suppliers. SB X7-7 requires the Department of Water Resources (DWR) to develop a task force and technical panel to develop alternative best management practices for the water sector. In addition, SB X7-7 required the DWR to develop criteria for baseline uses for residential, commercial, and industrial uses for both indoor and landscaped area uses. The DWR was also required to develop targets and regulations that achieve a statewide 20 percent reduction in water usage.

Assembly Bill 939, Assembly Bill 341, and Senate Bill 1374. Assembly Bill 939 (AB 939) requires that each jurisdiction in California to divert at least 50 percent of its waste away from landfills, whether through waste reduction, recycling or other means. AB 341 requires at least 75 percent of generated waste be source reduced, recycled, or composted by the year 2020. Senate Bill 1374 (SB 1374) requires the California Integrated Waste Management Board to adopt a model ordinance by March 1, 2004 suitable for adoption by any local agency to require 50 to 75 percent diversion of construction and demolition of waste materials from landfills.

Executive Order S-13-08. Executive Order S-13-08 indicates that "climate change in California during the next century is expected to shift precipitation patterns, accelerate sea level rise and increase temperatures, thereby posing a serious threat to California's economy, to the health and welfare of its population and to its natural resources." Pursuant to the requirements in the order, the 2009 California Climate Adaptation Strategy (California Natural Resource Agency 2009) was adopted, which is the "… first statewide, multi-sector, region-specific, and information-based climate change in California,

identifying and exploring strategies to adapt to climate change, and specifying a direction for future research.

Executive Order B-30-15. Executive Order B-30-15, establishing a new interim statewide greenhouse gas emission reduction target to reduce greenhouse gas emissions to 40 percent below 1990 levels by 2030, was signed by Governor Brown in April 2015.

Executive Order B-29-15. Executive Order B-29-15, mandates a statewide 25% reduction in potable water usage and was signed into law on April 1, 2015.

Executive Order B-37-16. Executive Order B-37-16, continuing the State's adopted water reduction, was signed into law on May 9, 2016. The water reduction builds off the mandatory 25% reduction called for in EO B-29-15.

Executive Order N-79-20. Executive Order N-79-20 was signed into law on September 23, 2020 and mandates 100 percent of in-state sales of new passenger cars and trucks be zero-emission by 2035; 100 percent of medium- and heavy-duty vehicles in the state be zero-emission vehicles by 2045 for all operations where feasible and by 2035 for drayage trucks; and to transition to 100 percent zero-emission off-road vehicles and equipment by 2035 where feasible.

SBX1 2. Signed into law in April 2011, SBX1 2, requires one-third of the State's electricity to come from renewable sources. The legislation increases California's current 20 percent renewables portfolio standard target in 2010 to a 33 percent renewables portfolio standard by December 31, 2020.

2.2.4 Mojave Desert Air Quality Management District

The project is within the MDAB, which is under the jurisdiction of the MDAQMD.

As shown in Table 3, the MDAQMD has identified thresholds of 100,000 tons per year or 548,000 pounds per day of CO2e emissions for individual projects.

Table 3: MDAQMD Air Quality Significance Thresholds

Pollutant	Annual Thresholds (tons/year)	Daily Thresholds (pounds/day)
NOx	25	137
VOC	25	137
PM10	15	82
PM2.5	15	82
SOx	25	137
CO	100	548
Lead	0.6	3
Greenhouse Gases (CO2e)	100,000	548,000

Source: http://www.mdaqmd.ca.gov/Modules/ShowDocument.aspx?documentid=2910

2.2.5 County of San Bernardino

County of San Bernardino Greenhouse Gas Emissions Reduction Plan

The County of San Bernardino adopted its "Greenhouse Gas Emissions Reduction Plan" in December 2011. The purpose of the GHG Reduction Plan is to reduce the County's internal and external GHG emissions by 15 percent below current (2011) levels by year 2020. The GHG Reduction Plan includes a two-tiered development review procedure to determine if a project could result in a significant impact related to greenhouse gas emissions or otherwise comply with the Plan pursuant to Section 15183.5 of the state CEQA Guidelines.

The initial screening procedure is to determine if a project will emit 3,000 metric tons of carbon dioxide equivalents (MTCO2e) per year or more. Projects that do not exceed this threshold require no further climate change analysis. Projects exceeding this threshold must meet a minimum 31 percent emissions reduction in order to garner a less than significant determination. This can be met by either (1) achieving 100 points from a menu of mitigation options provided in the GHG Plan or (2) quantifying proposed reduction measures. Projects failing to meet the 31 percent reduction threshold would have a potentially significant impact related to climate change and greenhouse gas emissions.

According to the *County of San Bernardino Greenhouse Gas Emissions Reduction Plan*, "all development projects, including those otherwise determined to be exempt from CEQA will be subject to applicable Development Code provisions, including the GHG performance standards, and state requirements, such as the California Building Code requirements for energy efficiency. With the application of the GHG performance standards, projects that are exempt from CEQA and small projects that do not exceed 3,000 MTCO2e per year will be considered to be consistent with the Plan and determined to have a less than significant individual and cumulative impact for GHG emissions." The Reduction Plan also states that "a review standard of 3,000 MTCO2e per year will be used to identify projects that require the use of Screening Tables or a project-specific technical analysis to quantify and mitigate project emissions." Furthermore, "for projects exceeding 3,000 MTCO2e per year of GHG emissions, the County will use Screening Tables as a tool to assist with calculating GHG reduction measures and the determination of a significance finding. Projects that garner a 100 or greater points would not require quantification of project specific GHG emissions. The point system was devised to ensure to Project compliance with the reduction measures in the GHG Plan such that the GHG emissions from new development, when considered together with those existing development, will allow the County to meet its 2020 target and support reductions in GHG emissions beyond 2020. Consistent with the CEQA Guidelines, such projects are consistent with the Plan and therefore will be determined to have a less than significant individual and cumulative impact for GHG emissions.

County of San Bernardino General Plan

The County of San Bernardino General Plan contains the following greenhouse gas related policies and programs that are applicable to the proposed project:

CO 4.5 Reduce emissions through reduced energy consumption.

Programs

1. Implement programs to phase in energy conservation improvements through the annual budget process.

CO 4.6 Provide incentives such as preferential parking for alternative-fuel vehicles (e.g., CNG or hydrogen).

CO 4.10 Support the development of alternative fuel infrastructure that is publicly accessible.

CO 4.12 Provide incentives to promote siting or use of clean air technologies (e.g., fuel cell technologies, renewable energy sources, UV coatings, and hydrogen fuel).

CO 4.13 Reduce Greenhouse Gas (GHG) emissions within the County boundaries.

Programs

1. Emission Inventories. The County will prepare GHG emissions inventories including emissions produced by: (1) the County's operational activities, services and facilities, over which the County has direct responsibility and control, and (2) private industry and development, that is located within the area subject to the County's discretionary land use authority.

    a. Establish an inventory of existing GHG emissions.
    b. Establish a projected inventory for year 2020.

2. GHG Emissions Reduction Plan. The County will adopt a GHG Emissions Reduction Plan that includes:

    a. Measures to reduce GHG emissions attributable to the County's operational activities, services and facilities, over which the County has direct responsibility and control; and,
    b. Measures to reduce GHG emissions produced by private industry and development that is located within the area subject to the County's discretionary land use authority and ministerial building permit authority; and,
    c. Implementation and monitoring procedures to provide periodic review of the plan's progress and allow for adjustments overtime to ensure fulfillment of the plan's objectives.

2.2.6 City of Victorville

City of Victorville General Plan

The City of Victorville General Plan contains the following greenhouse gas related policies and programs that are applicable to the proposed project:

Goal #7: Energy Conservation Promote energy sustainability by developing alternative power supplies and reducing energy use

Objective 7.2 Promote energy conservation

Policy 7.2.1 Support energy conservation by requiring sustainable building design and development for new residential, commercial and industrial projects.

Implementation Measure 7.2.1.1 Incorporate green building principles and practices, to the extent practicable and financially feasible, into the design, development and operation of all City owned facilities.

Implementation Measure 7.2.1.2 Minimize energy use of new residential, commercial and industrial projects by requiring high efficiency heating, lighting and other appliances, such as cooking equipment, refrigerators, furnaces, overhead and area lighting, and low NOx water heaters

3.0 Setting

3.1 Existing Physical Setting

The project site is located approximately two miles north of the unincorporated community of Sunfair in the southern central portion of the County of San Bernardino, which is part of the Mojave Desert Air Basin (MDAB) that includes the desert portion of San Bernardino County and the far eastern end of Riverside County

3.1.1 Local Climate and Meteorology

The MDAB is an assemblage of mountain ranges interspersed with long broad valleys that often contain dry lakes. Many of the lower mountains which dot the vast terrain rise from 1,000 to 4,000 feet above the valley floor. Prevailing winds in the MDAB are out of the west and southwest. These prevailing winds are due to the proximity of the MDAB to coastal and central regions and the blocking nature of the Sierra Nevada Mountains to the north; air masses pushed onshore in southern California by differential heating are channeled through the MDAB. The MDAB is separated from the southern California coastal and central California valley regions by mountains (highest elevation approximately 10,000 feet), whose passes form the main channels for these air masses. The Antelope Valley is bordered in the northwest by the Tehachapi Mountains, separated from the Sierra Nevada's in the north by the Tehachapi Pass (3,800-foot elevation). The Antelope Valley is bordered in the south by the San Gabriel Mountains, bisected by Soledad Canyon (3,300 feet). The Mojave Desert is bordered in the southwest by the San Bernardino Mountains, separated from the San Gabriel's by the Cajon Pass (4,200 feet). A lesser channel lies between the San Bernardino Mountains and the Little San Bernardino Mountains (the Morongo Valley).

The Palo Verde Valley portion of the Mojave Desert lies in the low desert, at the eastern end of a series of valleys (notably the Coachella Valley) whose primary channel is the San Gorgonio Pass (2,300 feet) between the San Bernardino and San Jacinto Mountains.

During the summer the MDAB is generally influenced by a Pacific Subtropical High cell that sits off the coast, inhibiting cloud formation and encouraging daytime solar heating. The MDAB is rarely influenced by cold air masses moving south from Canada and Alaska, as these frontal systems are weak and diffuse by the time the reach the desert. Most desert moisture arrives from infrequent warm, moist and unstable air masses from the south. The MDAB averages between three and seven inches of precipitation per year (from 16 to 30 days with at least 0.01 inches of precipitation). The MDAB is classified as a dry-hot desert climate (BWh), with portions classified as dry-very hot desert (BWhh), to indicate at least three months have maximum average temperatures over 100.4° F.

The temperature and precipitation levels for Victorville, the closest monitoring station to the project site, are in Table 4. Table 4 shows that July is typically the warmest month and December is typically the coolest month. Rainfall in the project area varies considerably in both time and space. Almost all the annual rainfall comes from the fringes of mid-latitude storms from late November to early April, with summers being almost completely dry.

Table 4: Meteorological Summary

Month	Temperature (˚F)		Average Precipitation (inches)
	Average High	Average Low	
January	58.8	29.8	0.95
February	62.1	33.1	1.05
March	67.0	36.6	0.80
April	74.2	41.5	0.36
May	82.7	47.9	0.13
June	91.6	54.3	0.04
July	98.1	60.8	0.14
August	97.2	60.2	0.21
September	91.3	54.1	0.23
October	80.2	44.4	0.32
November	67.3	34.5	0.50
December	59.4	29.2	0.79
Annual Average	**77.5**	**43.9**	**5.5**

Notes:
[1] Source : https://wrcc.dri.edu/cgi-bin/cliMAIN.pl?ca4405

3.1.2 Local Air Quality

The MDAQMD maintains an air-monitoring network that measures levels of several air pollutants throughout the air basin. Since not all air monitoring stations measure all of the tracked pollutants, the data from the following two monitoring stations, listed in the order of proximity to the project site have been used. The nearest air monitoring station to the project site is the Victorville monitoring station (Victorville Station) located approximately 3.75 miles east of the project site at 14306 Park Avenue. Table 5 presents the monitored pollutant levels within the vicinity. However, it should be noted that due to the air monitoring station distance from the project site, recorded air pollution levels at the air monitoring station reflect with varying degrees of accuracy, local air quality conditions at the project site.

<Table 5, next page>

Table 5: Local Area Air Quality Levels

Pollutant (Standard)[2]	Year		
	2020	2021	2022
Ozone:			
Maximum 1-Hour Concentration (ppm)	0.112	0.112	0.100
Days > CAAQS (0.09 ppm)	**4**	**8**	**3**
Maximum 8-Hour Concentration (ppm)	0.094	0.098	0.090
Days > NAAQS (0.07 ppm)	**35**	**34**	**44**
Days > CAAQS (0.070 ppm)	**17**	**18**	**23**
Carbon Monoxide:			
Maximum 8-Hour Concentration (ppm)	*	*	*
Days > NAAQS (9 ppm)	0	0	0
Nitrogen Dioxide:			
Maximum 1-Hour Concentration (ppm)	0.059	0.057	0.054
Days > NAAQS (0.25 ppm)	0	0	0
Inhalable Particulates (PM10):			
Maximum 24-Hour Concentration (µg/m^3)	261.4	591.6	372.1
Days > NAAQS (150 µg /m^3)	**2**	**1**	**2**
Days > CAAQS (50 µg /m^3)	*	*	*
Annual Average (ug/m^3)	34.0	33.9	33.6
Annual > NAAQS (50 µg /m^3)	No	No	No
Annual > CAAQS (20 µg /m^3)	**Yes**	**Yes**	**Yes**
Ultra-Fine Particulates (PM2.5):			
Maximum 24-Hour Concentration (µg /m^3)	48.4	87.1	24.6
Days > NAAQS (35 µg /m^3)	4	1	0
Annual Average (µg /m^3)	9.7	10.2	8.9
Annual > NAAQS (15 µg /m3)	No	No	No
Annual > CAAQS (12 µg /m^3)	No	No	No

[1.] Source: obtained from https://www.arb.ca.gov/adam/topfour/topfour1.php
[2] CAAQS = California Ambient Air Quality Standard; NAAQS = National Ambient Air Quality Standard; ppm = parts per million; µg/m^3 = micrograms/cubic meter
[3] No data available.

The monitoring data presented in Table 5 shows that ozone and particulate matter (PM10) are the air pollutants of primary concern in the project area, which are detailed below.

Ozone

During the 2020 to 2022 monitoring period, the State 1-hour concentration standard for ozone was exceeded between three and eight days each year at the Victorville Station. The State 8-hour ozone standard has been exceeded between 17 and 23 days each year over the past three years at the Victorville Station. The Federal 8-hour ozone standard has been exceeded between 34 and 44 days each year of the past three years at the Victorville Station.

Carbon Monoxide

CO is another important pollutant that is due mainly to motor vehicles. The Victorville Station did not record an exceedance of the state or federal 8-hour CO standards for the last three years.

Nitrogen Dioxide
The Victorville Station did not record an exceedance of the State or Federal NO_2 standards for the last three years.

Particulate Matter
During the 2020 to 2022 monitoring period, the Victorville Station did not record an exceedance of the State 24-hour concentration standard for PM10. Over the same time period the Federal 24-hour and annual standards for PM10 have been exceeded between one and two days each year at the Victorville Station.

The Federal 24-hour standard for PM2.5 has been exceeded four days in 2020 and one day in 2021 at the Victorville Station.

According to the EPA, some people are much more sensitive than others to breathing fine particles (PM10 and PM2.5). People with influenza, chronic respiratory and cardiovascular diseases, and the elderly may suffer worsening illness and premature death due to breathing these fine particles. People with bronchitis can expect aggravated symptoms from breathing in fine particles. Children may experience decline in lung function due to breathing in PM10 and PM2.5. Other groups considered sensitive are smokers and people who cannot breathe well through their noses. Exercising athletes are also considered sensitive because many breathe through their mouths during exercise.

3.1.3 Attainment Status

The EPA and the ARB designate air basins where ambient air quality standards are exceeded as "nonattainment" areas. If standards are met, the area is designated as an "attainment" area. If there is inadequate or inconclusive data to make a definitive attainment designation, they are considered "unclassified." National nonattainment areas are further designated as marginal, moderate, serious, severe, or extreme as a function of deviation from standards. Each standard has a different definition, or 'form' of what constitutes attainment, based on specific air quality statistics. For example, the Federal 8-hour CO standard is not to be exceeded more than once per year; therefore, an area is in attainment of the CO standard if no more than one 8-hour ambient air monitoring values exceeds the threshold per year. In contrast, the federal annual $PM_{2.5}$ standard is met if the three-year average of the annual average $PM_{2.5}$ concentration is less than or equal to the standard. Table 6 lists the attainment status for the criteria pollutants in the basin.

As indicated below in Table 3, the MDAB has been designated by the EPA as a non-attainment area for ozone (O3) and suspended particulates (PM10). Currently, the Basin is in attainment with the ambient air quality standards for carbon monoxide (CO), lead, sulfur dioxide (SO2), nitrogen dioxide (NO2) and particulate matter (PM2.5).

<Table 6, next page>

Table 6: Attainment Status of MDAQMD[1] – Portion of Mojave Desert Air Basin

Pollutant	Federal Designation	State Designation
1-Hour Ozone	--	Nonattainment
8-Hour Ozone	Nonattainment	Nonattainment
CO	Unclassified/Attainment	Attainment
PM10	Nonattainment	Nonattainment
PM2.5	Unclassified/Attainment	Nonattainment
Lead	Unclassified/Attainment	Attainment
SO2	Unclassified/Attainment	Attainment
NO2	Unclassified/Attainment	Attainment

Notes:

[1] MDAQMD = Mojave Desert Air Quality Management District

[2] Source: California Air Resources Board (2019) (https://ww2.arb.ca.gov/resources/documents/maps-state-and-federal-area-designations) and MDAQMD (https://www.mdaqmd.ca.gov/air-quality/mdaqmd-attaiment-status).

3.2 Greenhouse Gases

Constituent gases of the Earth's atmosphere, called atmospheric greenhouse gases (GHG), play a critical role in the Earth's radiation amount by trapping infrared radiation emitted from the Earth's surface, which otherwise would have escaped to space. Prominent greenhouse gases contributing to this process include carbon dioxide (CO_2), methane (CH_4), ozone, water vapor, nitrous oxide (N_2O), and chlorofluorocarbons (CFCs). This phenomenon, known as the Greenhouse Effect, is responsible for maintaining a habitable climate. Anthropogenic (caused or produced by humans) emissions of these greenhouse gases in excess of natural ambient concentrations are responsible for the enhancement of the Greenhouse Effect and have led to a trend of unnatural warming of the Earth's natural climate, known as global warming or climate change. Emissions of gases that induce global warming are attributable to human activities associated with industrial/manufacturing, agriculture, utilities, transportation, and residential land uses. Transportation is responsible for 41 percent of the State's greenhouse gas emissions, followed by electricity generation. Emissions of CO_2 and nitrous oxide (NO_2) are byproducts of fossil fuel combustion. Methane, a potent greenhouse gas, results from off-gassing associated with agricultural practices and landfills. Sinks of CO_2, where CO_2 is stored outside of the atmosphere, include uptake by vegetation and dissolution into the ocean. Table 7 provides a description of each of the greenhouse gases and their global warming potential.

Additional information is available: https://www.arb.ca.gov/cc/inventory/data/data.htm

<Table 7 on next page>

Table 7: Description of Greenhouse Gases

Greenhouse Gas	Description and Physical Properties	Sources
Nitrous oxide	Nitrous oxide (N_20), also known as laughing gas is a colorless gas. It has a lifetime of 114 years. Its global warming potential is 298.	Microbial processes in soil and water, fuel combustion, and industrial processes. In addition to agricultural sources, some industrial processes (nylon production, nitric acid production) also emit N_20.
Methane	Methane (CH_4) is a flammable gas and is the main component of natural gas. It has a lifetime of 12 years. Its global warming potential is 25.	A natural source of CH_4 is from the decay of organic matter. Methane is extracted from geological deposits (natural gas fields). Other sources are from the decay of organic material in landfills, fermentation of manure, and cattle farming.
Carbon dioxide	Carbon dioxide (CO_2) is an odorless, colorless, natural greenhouse gas. Carbon dioxide's global warming potential is 1. The concentration in 2005 was 379 parts per million (ppm), which is an increase of about 1.4 ppm per year since 1960.	Natural sources include decomposition of dead organic matter; respiration of bacteria, plants, animals, and fungus; evaporation from oceans; and volcanic outgassing. Anthropogenic sources are from burning coal, oil, natural gas, and wood.
Chlorofluorocarbons	CFCs are nontoxic, nonflammable, insoluble, and chemically unreactive in the troposphere (the level of air at the earth's surface). They are gases formed synthetically by replacing all hydrogen atoms in methane or methane with chlorine and/or fluorine atoms. Global warming potentials range from 3,800 to 8,100.	Chlorofluorocarbons were synthesized in 1928 for use as refrigerants, aerosol propellants, and cleaning solvents. They destroy stratospheric ozone; therefore, their production was stopped as required by the Montreal Protocol.
Hydrofluorocarbons	Hydrofluorocarbons (HFCs) are a group of greenhouse gases containing carbon, chlorine, and at least one hydrogen atom. Global warming potentials range from 140 to 11,700.	Hydrofluorocarbons are synthetic manmade chemicals used as a substitute for chlorofluorocarbons in applications such as automobile air conditioners and refrigerants.
Perfluorocarbons	Perfluorocarbons (PFCs) have stable molecular structures and only break down by ultraviolet rays about 60 kilometers above the Earth's surface. They have a lifetime 10,000 to 50,000 years. They have a global warming potential range of 6,200 to 9,500.	Two main sources of perfluorocarbons are primary aluminum production and semiconductor manufacturing.
Sulfur hexafluoride	Sulfur hexafluoride (SF_6) is an inorganic, odorless, colorless, and nontoxic, nonflammable gas. It has a lifetime of 3,200 years. It has a high global warming potential, 23,900.	This gas is manmade and used for insulation in electric power transmission equipment, in the magnesium industry, in semiconductor manufacturing, and as a tracer gas for leak detection.

Notes:
1. Sources: Intergovernmental Panel on Climate Change 2014a and Intergovernmental Panel on Climate Change 2014b. https://www.ipcc.ch/publications_and_data/ar4/wg1/en/ch2s2-10-2.html

4.0 Modeling Parameters and Assumptions

4.1 Construction

Emissions are estimated using the CalEEMod (Version 2022.1.1.22) software, which is a statewide land use emissions computer model designed to provide a uniform platform for government agencies, land use planners, and environmental professionals to quantify potential criteria pollutant and GHG emissions from a variety of land use projects. CalEEMod was developed in collaboration with the air districts of California. Regional data (e.g., emission factors, trip lengths, meteorology, source inventory, etc.) have been provided by the various California air districts to account for local requirements and conditions. The model is considered to be an accurate and comprehensive tool for quantifying air quality and GHG impacts from land use projects throughout California.

The CalEEMod program uses the EMFAC2017 computer program to calculate the emission rates specific for the MDAQMD portion of San Bernardino County for construction-related employee vehicle trips and the OFFROAD2011 computer program to calculate emission rates for heavy truck operations. EMFAC2017 and OFFROAD2011 are computer programs generated by CARB that calculates composite emission rates for vehicles. Emission rates are reported by the program in grams per trip and grams per mile or grams per running hour. Using CalEEMod, the peak daily air pollutant emissions were calculated and presented below. These emissions represent the highest level of emissions for each of the construction phases in terms of air pollutant emissions.

The analysis assesses the emissions associated with the construction of the proposed project as indicated in Table 1. Per the site plan, the overall area to be disturbed during construction of the proposed project was estimated to be approximately 3 acres. The proposed project was estimated to begin construction by the third quarter of 2024. This was estimated in CalEEMod as a 13-month construction period beginning July 2024 and operation of the project beginning in 2025. The phases of the construction activities which have been analyzed below are: 1) site preparation, 2) grading, 3) building, 4) paving, and 5) architectural coating. For details on construction modeling and construction equipment for each phase, please see Appendix A.

4.2 Operations

Operational or long-term emissions occur over the life of the Project. Both mobile and area sources generate operational emissions. Area source emissions arise from consumer product usage, heaters that consume natural gas, gasoline-powered landscape equipment, and architectural coatings (painting). Mobile source emissions from motor vehicles are the largest single long-term source of air pollutants from the operation of the Project. Small amounts of emissions would also occur from area sources such as the consumption of natural gas for heating, hearths, from landscaping emissions, and consumer product usage. The operational emissions were estimated using the latest version of CalEEMod.

Mobile Sources

Mobile sources include emissions from the additional vehicle miles generated from the proposed project. Per CalEEMod estimates, the project will generate approximately 1,538 trips per day. The program then applies the emission factors for each trip which is provided by the EMFAC2017 model to

determine the vehicular traffic pollutant emissions. The CalEEMod default trip lengths were used in this analysis. Please see CalEEMod output comments sections in Appendix A for details.

Area Sources

Area sources include emissions from consumer products, landscape equipment and architectural coatings. Landscape maintenance includes fuel combustion emissions from equipment such as lawn mowers, rototillers, shredders/grinders, blowers, trimmers, chain saws, and hedge trimmers, as well as air compressors, generators, and pumps. As specifics were not known about the landscaping equipment fleet, CalEEMod defaults were used to estimate emissions from landscaping equipment.

Per MDAQMD Rule 1113 as amended on April 23, 2012, the architectural coatings that would be applied after January 1, 2013 will be limited to an average of 150 grams per liter or less.

Energy Usage

2022.1.1.22 CalEEMod defaults were utilized.

5.0 Thresholds of Significance

5.1 Air Quality Thresholds of Significance

5.1.1 CEQA Guidelines for Air Quality

The CEQA Guidelines define a significant effect on the environment as "a substantial, or potentially substantial, adverse change in the environment." To determine if a project would have a significant impact on air quality, the type, level, and impact of emissions generated by the project must be evaluated.

The following air quality significance thresholds are contained in Appendix G of the CEQA Guidelines. A significant impact would occur if the project would:

- Conflict with or obstruct implementation of the applicable air quality plan;
- Result in a cumulatively considerable net increase of any criteria pollutant for which the project region is nonattainment under an applicable national or state ambient air quality standard;
- Expose sensitive receptors to substantial pollutant concentrations; or
- Result in other emissions (such as those leading to odors) adversely affecting a substantial number of people.

The CEQA Guidelines Section 15064.7 provides the significance criteria established by the applicable air quality management district or air pollution control district, when available, may be relied upon to make determinations of significance. The potential air quality impacts of the project are, therefore, evaluated according to thresholds developed by MDAQMD in their CEQA Guidelines.

5.1.2 Regional Significance Thresholds

According to the MDAQMD, a project is non-conforming if it conflicts with or delays implementation of any applicable attainment or maintenance plan. A project is conforming if it complies with all applicable MDAQMD rules and regulations, complies with all proposed control measures that are not yet adopted from the applicable plan(s), and it is consistent with the growth forecasts in the applicable plan(s) (or is directly included in the applicable plan).

Violation of Air Quality Standards or Substantial Contribution to Air Quality Violations. The MDAQMD currently recommends that projects with construction-related and/or operational emissions that exceed any of the following emissions thresholds should be considered significant:

- 25 tons per year or 137 pounds per day pounds per day of VOC
- 25 tons per year or 137 pounds per day of NOx
- 100 tons per year or 548 pounds per day of CO
- 25 tons per year or 137 pounds per day of Sox
- 15 tons per year or 82 pounds per day of PM10
- 12 tons per year or 65 pounds per day of PM2.5

For the purposes to this air quality impact analysis, a regional air quality impact would be considered significant if emissions exceed the MDAQMD significance thresholds identified above and in Table 5.

5.2 Greenhouse Gas Thresholds of Significance

5.2.1 CEQA Guidelines for Greenhouse Gas

CEQA Guidelines define a significant effect on the environment as "a substantial, or potentially substantial, adverse change in the environment." To determine if a project would have a significant impact on greenhouse gases, the type, level, and impact of emissions generated by the project must be evaluated.

The following greenhouse gas significance thresholds are contained in Appendix G of the CEQA Guidelines, which were amendments adopted into the Guidelines on March 18, 2010, pursuant to SB 97. A significant impact would occur if the project would:

(a) Generate greenhouse gas emissions, either directly or indirectly, that may have a significant impact on the environment; or

(b) Conflict with any applicable plan, policy or regulation of an agency adopted for the purpose of reducing the emissions of greenhouse gases.

However, despite this, currently neither the CEQA statutes, OPR guidelines, nor the draft proposed changes to the CEQA Guidelines prescribe thresholds of significance or a particular methodology for performing an impact analysis; as with most environmental topics, significance criteria are left to the judgment and discretion of the Lead Agency. As previously discussed (see Section 2.2.4 of this report), MDAQMD has identified thresholds of 100,000 tons per year or 548,000 pounds per day of CO2e emissions for individual projects. The MDAQMD thresholds were used in this analysis.

The project's emissions will be compared to a screening threshold of 3,000 MTCO2e/year and the project is expected to comply with the performance standards for commercial uses, as detailed in the *County of San Bernardino Greenhouse Gas Emissions Reduction Plan.*

6.0 Air Quality Emissions Impact

6.1 Construction Air Quality Emissions Impact

The latest version of CalEEMod was used to estimate the onsite and offsite construction emissions. The emissions incorporate Rule 403.2. Rule 403.2 (fugitive dust) is not considered a mitigation measure as the project by default is required to incorporate this rule during construction.

6.1.1 Regional Construction Emissions

The construction emissions for the project would not exceed MDAQMD's daily or annual emissions thresholds as demonstrated in Table 8, and therefore would be considered less than significant.

Table 8: Regional Significance - Construction Emissions

Activity	Pollutant Emissions (pounds/day)					
	VOC	NOx	CO	SO_2	PM10	PM2.5
2024	3.75	36.00	34.50	0.05	9.49	5.47
2025	9.81	10.70	13.90	0.02	0.61	0.44
Maximum	**9.81**	**36.00**	**34.50**	**0.05**	**9.49**	**5.47**
MDAQMD Daily Thresholds	**137**	**137**	**548**	**137**	**82**	**65**
Exceeds Thresholds	No	No	No	No	No	No
Activity	**Pollutant Emissions (tons/year)**					
	VOC	**NOx**	**CO**	**SO_2**	**PM10**	**PM2.5**
2024	**0.08**	**0.72**	**0.84**	**0.00**	**0.07**	**0.05**
2025	**0.18**	**0.79**	**1.03**	**0.00**	**0.05**	**0.03**
Total	**0.26**	**1.51**	**1.87**	**0.00**	**0.12**	**0.08**
MDAQMD Annual Thresholds	**25**	**25**	**100**	**25**	**15**	**12**
Exceeds Threshold?	No	No	No	No	No	No

Notes:
[1] Source: CalEEMod Version 2022.1.1.22

6.1.3 Odors

Potential sources that may emit odors during construction activities include the application of materials such as asphalt pavement. The objectionable odors that may be produced during the construction process are of short-term in nature and the odor emissions are expected cease upon the drying or hardening of the odor producing materials. Diesel exhaust and VOCs would be emitted during construction of the project, which are objectionable to some; however, emissions would disperse rapidly from the project site and therefore should not reach an objectionable level at the nearest sensitive receptors. Due to the short-term nature and limited amounts of odor producing materials being utilized, no significant impact related to odors would occur during construction of the proposed project.

6.1.4 Construction-Related Toxic Air Contaminant Impact

The greatest potential for toxic air contaminant emissions would be related to diesel particulate emissions associated with heavy equipment operations during construction of the proposed project. The

Office of Environmental Health Hazard Assessment (OEHHA) has issued the Air Toxic Hot Spots Program Risk Assessment Guidelines and Guidance Manual for the Preparation of Health Risk Assessments, February 2015 to provide a description of the algorithms, recommended exposure variates, cancer and noncancer health values, and the air modeling protocols needed to perform a health risk assessment (HRA) under the Air Toxics Hot Spots Information and Assessment Act of 1987. Hazard identification includes identifying all substances that are evaluated for cancer risk and/or non-cancer acute, 8-hour, and chronic health impacts. In addition, identifying any multi-pathway substances that present a cancer risk or chronic non-cancer hazard via non-inhalation routes of exposure.

Given the relatively limited number of heavy-duty construction equipment and construction schedule, the proposed project would not result in a long-term substantial source of toxic air containment emissions and corresponding individual cancer risk. Furthermore, construction-based particulate matter (PM) emissions (including diesel exhaust emissions) do not exceed any regional thresholds. Therefore, no significant short-term toxic air contaminant impacts would occur during construction of the proposed project.

6.2 Operational Air Quality Emissions Impact

6.2.1 Regional Operational Emissions

The operations-related criteria air quality impacts created by the proposed project have been analyzed through the use of CalEEMod model. The operating emissions were based on year 2025, which is a conservative estimate of the opening year for the project. The summer and winter emissions created by the proposed project's long-term operations were calculated and the highest emissions from either summer or winter are summarized in Table 9.

Table 9: Regional Significance - Operational Emissions

Activity	Pollutant Emissions (pounds/day)[1]					
	VOC	NOx	CO	SO2	PM10	PM2.5
Area Sources[2]	0.94	0.01	1.34	0.00	0.00	0.00
Energy Usage[3]	0.01	0.25	0.21	0.00	0.02	0.02
Mobile Sources[4]	8.12	7.48	63.10	0.14	11.40	2.96
Total Emissions	**9.07**	**7.74**	**64.65**	**0.14**	**11.42**	**2.98**
MDAQMD Annual Thresholds	**25**	**25**	**100**	**25**	**15**	**12**
Exceeds Threshold?	No	No	No	No	No	No
Activity	**Pollutant Emissions (tons/year)[1]**					
Area Sources[2]	0.15	0.00	0.12	0.00	0.00	0.00
Energy Usage[3]	0.00	0.05	0.04	0.00	0.00	0.00
Mobile Sources[4]	1.30	1.40	9.75	0.02	2.08	0.54
Total Emissions	**1.45**	**1.45**	**9.91**	**0.02**	**2.08**	**0.54**
MDAQMD Annual Thresholds	**25**	**25**	**100**	**25**	**15**	**12**
Exceeds Threshold?	No	No	No	No	No	No

Notes:
[1] Source: CalEEMod Version 2022.1.1.22
[2] Area sources consist of emissions from consumer products, architectural coatings, and landscaping equipment.
[3] Energy usage consists of emissions from on-site natural gas usage.

[4] Mobile sources consist of emissions from vehicles and road dust.

Table 9 provides the project's unmitigated operational emissions. Table 9 shows that the project does not exceed the MDAQMD daily or annual regional emissions thresholds. Therefore, operational emissions are considered to be less than significant.

6.2.2 Operations-Related Toxic Air Contaminant Impacts

MDAQMD recommends avoiding siting new sensitive land uses such as residences, schools, daycare centers, playgrounds, or medical facilities within 1,000 feet of a major transportation project (50,000 or more vehicles per day).

The proposed project involves the construction of two medical office buildings and would be considered to be a sensitive receptor. However, the project is not considered a major transportation project and is over 3 miles west of the nearest major transportation project, Interstate 15, which has 94,000 average daily vehicle trips. The site is located on Palmdale Road which has 28,000 average daily vehicle trips[6]. Per the CalEEMod output, the project is only anticipated to generate approximately 1,538 daily vehicle trips (see Appendix A).

The closest existing sensitive receptors (to the site area) are the residential land uses located approximately 780 feet south across Palmdale Road.

Therefore, as the proposed project does not generate more than 50,000 vehicles per day and will not be exposed to roadways carrying 50,000 or more vehicles per day; a project-specific health risk assessment is not required or warranted. Impacts to nearby sensitive receptors are considered to be less than significant.

6.2.3 Operations-Related Odor Impacts

Potential sources that may emit odors during the on-going operations of the proposed project would include odor emissions from vehicular emissions and trash storage areas. As the project is medical office buildings and the nearest sensitive receptors are located approximately 780 feet from the project boundaries, no significant impact related to odors would occur during the on-going operations of the proposed project.

6.3 Cumulative Regional Air Quality Impacts

Cumulative projects include local development as well as general growth within the project area. However, as with most development, the greatest source of emissions is from mobile sources, which travel well out of the local area. Therefore, from an air quality standpoint, the cumulative analysis would

[6] Source 2020 Caltrans Traffic Counts (https://dot.ca.gov/programs/traffic-operations/census)

extend beyond any local projects and when wind patterns are considered, would cover an even larger area. Accordingly, the cumulative analysis for the project's air quality must be generic by nature.

The project area is out of attainment for both ozone and particulate matter. Construction and operation of cumulative projects will further degrade the air quality of the Mojave Desert Air Basin. The greatest cumulative impact on the quality of regional air cell will be the incremental addition of pollutants mainly from increased traffic from residential, commercial, and industrial development and the use of heavy equipment and trucks associated with the construction of these projects. Air quality will be temporarily degraded during construction activities that occur separately or simultaneously. However, in accordance with the MDAQMD methodology, projects that do not exceed the MDAQMD criteria or can be mitigated to less than criteria levels are not significant and do not add to the overall cumulative impact.

Project operations would generate emissions of NOx, ROG, CO, PM10, and PM2.5, which would not exceed the MDAQMD regional thresholds and would not be expected to result in ground level concentrations that exceed the NAAQS or CAAQS. Therefore, operation of the project would not result in a cumulatively considerable net increase for non-attainment of criteria pollutants or ozone precursors. As a result, the project would result in a less than significant cumulative impact for operational emissions.

6.4 Air Quality Compliance

The California Environmental Quality Act (CEQA) requires a discussion of any inconsistencies between a proposed project and applicable General Plans and Regional Plans (CEQA Guidelines Section 15125). According to the MDAQMD, a project is non-conforming if it conflicts with or delays implementation of any applicable attainment or maintenance plan.

A project is conforming if it complies with all applicable District rules and regulations, complies with all proposed control measures that are not yet adopted from the applicable plan(s), and is consistent with the growth forecasts in the applicable plan(s) (or is directly included in the applicable plan). Conformity with growth forecasts can be established by demonstrating that the project is consistent with the land use plan that was used to generate the growth forecast. An example of a non-conforming project would be one that increases the gross number of dwelling units, increases the number of trips, and/or increases the overall vehicle miles traveled in an affected area (relative to the applicable land use plan). The "one map approach" is employed by the County of San Bernardino, as it permits the use of a single map showing both General Plan land use designations and zoning classifications. The one-map approach assures that there will always be land use consistency between the County's General Plan and its Zoning Code.

The project site is located within the City of Victorville. The proposed project will be two medical office buildings. Per the City's General Plan Land Use & Zoning Districts map, the current land use zoning district is Commercial Neighborhood Retail/Service (C-1). As shown by the results of this air analysis, the project's emissions do not exceed any MDAQMD thresholds during either short-term construction or long-term operation of the project. Therefore, as the project is a commercial use, the proposed project is not anticipated to exceed the Attainment Plan assumptions for the project site.

Based on the above, the proposed project would not conflict with implementation of the MDAQMD Attainment Plans, impacts are considered to be less than significant.

7.0 Greenhouse Gas Impact Analysis

7.1 Construction Greenhouse Gas Emissions Impact

The greenhouse gas emissions from project construction equipment and worker vehicles are shown in Table 10. The emissions are from all phases of construction. The total construction emissions amortized over a period of 30 years are estimated at 11 metric tons of CO_2e per year. Annual CalEEMod output calculations are provided in Appendix A.

Table 10: Construction Greenhouse Gas Emissions

Activity	Emissions ($MTCO_2e$)[1]		
	Onsite	Offsite	Total
Site Preparation	12.1	0.6	12.7
Grading	10.8	6.7	17.5
Building Construction	252.0	31.9	283.9
Paving	11.1	3.6	14.7
Coating	1.1	0.2	1.3
Total	287.1	42.9	330.0
Averaged over 30 years[2]	9.6	1.4	11.0

Notes:
1. $MTCO_2e$=metric tons of carbon dioxide equivalents (includes carbon dioxide, methane and nitrous oxide).
2. The emissions are averaged over 30 years because the average is added to the operational emissions, pursuant to SCAQMD.
* CalEEMod output (Appendix A)

7.2 Operational Greenhouse Gas Emissions Impact

Operational emissions occur over the life of the project. Table 11 below shows that the subtotal for the proposed project would result in annual emissions of 2,511 MT CO2e per year (see Appendix A CalEEMod Output for details). The total emissions of 2,552 MTCO2e/year (including amortized construction emissions of 11 MT) would not exceed the San Bernardino County screening threshold of 3,000 metric tons per year of CO2e. As shown in Table 11, the project's total GHG emissions would also not exceed the MDAQMD annual threshold of 100,000 MTCO2e or the MDAQMD daily threshold of 548,000 pounds of CO2e.

According to the San Bernardino County thresholds of significance established above, a cumulative global climate change impact would occur if the GHG emissions created from the on-going operations would exceed 3,000 metric tons per year of CO2e. Therefore, as the project's total emissions do not exceed 3,000 metric tons per year of CO2e, operation of the proposed project would not create a significant cumulative impact to global climate change.

<Table 11, next page>

Table 11: Opening Year Project-Related Greenhouse Gas Emissions

Category	Greenhouse Gas Emissions (Metric Tons/Year)[1]						(lbs/day)
	Bio-CO2	NonBio-CO_2	CO_2	CH_4	N_2O	CO_2e	CO2e
Area Sources[2]	0.00	0.45	0.45	0.00	0.00	0.45	8.29
Energy Usage[3]	0.00	206.00	206.00	0.01	0.00	207.00	1,248.00
Mobile Sources[4]	0.00	2,153.00	2,153.00	0.09	0.11	2,191.00	14,197.00
Solid Waste[5]	28.90	0.00	28.90	2.89	0.00	101.00	611.00
Water[6]	1.28	6.06	7.34	0.13	0.00	11.60	69.90
Total Operational Emissions	30.18	2,365.51	2,395.69	3.12	0.11	**2,511.05**	**16,134.19**
Construction[7]	0.00	10.92	10.92	0.00	0.00	11.00	**5,579.00**
Combined Emissions	30.18	2,376.43	2,406.61	3.12	0.11	**2,522.05**	**-**
MDAQMD GHG Thresholds						**100,000**	**548,000**
County of San Bernardino GHG Emissions Reduction Plan Threshold						**3,000**	**-**
Exceeds Threshold?						**No**	**No**

Notes:
[1] Source: CalEEMod Version 2022.1.1.22
[2] Area sources consist of GHG emissions from consumer products, architectural coatings, and landscape equipment.
[3] Energy usage consist of GHG emissions from electricity and natural gas usage.
[4] Mobile sources consist of GHG emissions from vehicles.
[5] Solid waste includes the CO_2 and CH_4 emissions created from the solid waste placed in landfills.
[6] Water includes GHG emissions from electricity used for transport of water and processing of wastewater.
[7] Construction GHG emissions based on a 30-year amortization rate for annual emissions.

7.3 Greenhouse Gas Plan Consistency

The proposed project would have the potential to conflict with any applicable plan, policy or regulation of an agency adopted for the purpose of reducing the emissions of greenhouse gases.

County of San Bernardino Emissions Reduction Plan

According to the *County of San Bernardino Greenhouse Gas Emissions Reduction Plan*, "all development projects, including those otherwise determined to be exempt from CEQA will be subject to applicable Development Code provisions, including the GHG performance standards, and state requirements, such as the California Building Code requirements for energy efficiency. With the application of the GHG performance standards, projects that are exempt from CEQA and small projects that do not exceed 3,000 MTCO2e per year will be considered to be consistent with the Plan and determined to have a less than significant individual and cumulative impact for GHG emissions." The Reduction Plan also states that "the 3,000 MTCO2e per year value was chosen as the medial value and is used in defining small projects that must include the Performance Standards as described in Attachment B (of the *County of San Bernardino Greenhouse Gas Emissions Reduction Plan*), but do not need to use the Screening Tables or alternative GHG mitigation analysis described in Attachment D (of the *County of San Bernardino Greenhouse Gas Emissions Reduction Plan*)."

The project's total net operational GHG emissions do not exceed the County's screening threshold of 3,000 MTCO2e per year. Therefore, the project does not need to accrue points using the screening tables and is consistent with the GHG Plan, pursuant to Section 15183.5 of the State CEQA Guidelines. As mentioned above, the project is expected to comply with the performance standards for commercial

uses as detailed in the *County of San Bernardino Greenhouse Gas Emissions Reduction Plan* (see Appendix A for details on the performance standards for commercial projects). The proposed project will not result in substantial emissions of greenhouse gases and will not conflict with the Green County initiatives.

City of Victorville Greenhouse Gas Emissions Screening Table Review

The City of Victorville requires projects subject to CEQA to complete the City's Greenhouse Gas Emissions Screening Table Review in order to ensure compliance with the City's goals. The City requires projects to reach a minimum of 100 points based on project design features to be compliant. As shown in Appendix B, the project would earn 76 points based upon the features with given point values and will also increase tree planting in parking areas 50% beyond City Code requirements and include a storm water reuse system, both features that will must be reviewed by the City to be given a point value. Documentation for the storm water reuse system can be found following the tables in Appendix B. Therefore, compliance with the screening tables shall be determined by the City upon their review.

7.4 Cumulative Greenhouse Gas Impacts

Although the project is expected to emit GHGs, the emission of GHGs by a single project into the atmosphere is not itself necessarily an adverse environmental effect. Rather, it is the increased accumulation of GHG from more than one project and many sources in the atmosphere that may result in global climate change. Therefore, in the case of global climate change, the proximity of the project to other GHG emission generating activities is not directly relevant to the determination of a cumulative impact because climate change is a global condition. According to CAPCOA, "GHG impacts are exclusively cumulative impacts; there are no non-cumulative GHG emission impacts from a climate change perspective."[7] The resultant consequences of that climate change can cause adverse environmental effects. A project's GHG emissions typically would be very small in comparison to state or global GHG emissions and, consequently, they would, in isolation, have no significant direct impact on climate change.

The state has mandated a goal of reducing statewide emissions to 1990 levels by 2020, even though statewide population and commerce are predicted to continue to expand. In order to achieve this goal, CARB is in the process of establishing and implementing regulations to reduce statewide GHG emissions. Currently, the County of San Bernardino Greenhouse Gas Emissions Reduction Plan's initial screening procedure is to determine if a project will emit 3,000 metric tons of carbon dioxide equivalents (MTCO2E) per year or more. Projects that do not exceed this threshold require no further climate change analysis. Therefore, consistent with CEQA Guidelines Section 15064h(3),[8] the County, as lead agency, has

7 Source: California Air Pollution Control Officers Association, CEQA & Climate change: Evaluating and Addressing Greenhouse Gas Emissions from Projects Subject to the California Environmental Quality Act, (2008).

8 The State CEQA Guidelines were amended in response to SB 97. In particular, the State CEQA Guidelines were amended to specify that compliance with a GHG emissions reduction program renders a cumulative impact insignificant. Per State CEQA Guidelines Section 15064(h)(3), a project's incremental contribution to a cumulative impact can be found not cumulatively considerable if the project will comply with an approved plan or mitigation program that provides specific requirements that will avoid or substantially lessen the cumulative problem within the geographic area of the project. To qualify, such a

determined that the project's contribution to cumulative GHG emissions and global climate change would be less than significant if the project is consistent with the applicable regulatory plans and policies to reduce GHG emissions.

As discussed in Section 7.3 above, the project is consistent with the goals and objectives of the County of San Bernardino Greenhouse Gas Emissions Reduction Plan. Therefore, the project's incremental contribution to greenhouse gas emissions and their effects on climate change would not be cumulatively considerable.

plan or program must be specified in law or adopted by the public agency with jurisdiction over the affected resources through a public review process to implement, interpret, or make specific the law enforced or administered by the public agency. Examples of such programs include a "water quality control plan, air quality attainment or maintenance plan, integrated waste management plan, habitat conservation plan, natural community conservation plan, [and] plans or regulations for the reduction of greenhouse gas emissions."

8.0 Energy Analysis

Information from the CalEEMod 2022.1.1.22 Outputs contained in the air quality and greenhouse gas analyses above was utilized for this analysis. The CalEEMod outputs detail project related construction equipment, transportation energy demands, and facility energy demands.

8.1 Construction Energy Demand

8.1.1 Construction Equipment Electricity Usage Estimates

Electrical service will be provided by Southern California Edison (SCE). Based on the 2017 National Construction Estimator, Richard Pray (2017)[9], the typical power cost per 1,000 square feet of building construction per month is estimated to be $2.32. The project plans to develop the site with two medical buildings and a coffee shop totaling 30,840 square feet over the course of approximately 13 months. Based on Table 12, the total power cost of the on-site electricity usage during the construction of the proposed project is estimated to be approximately $930.13. As shown in Table 12, the total electricity usage from Project construction related activities is estimated to be approximately 16,912 kWh.[10]

Table 12: Project Construction Power Cost and Electricity Usage

Power Cost (per 1,000 square foot of building per month of construction)	Total Building Size (1,000 Square Foot)[1]	Construction Duration (months)	Total Project Construction Power Cost
$2.32	30.840	13	$930.13

Cost per kWh	Total Project Construction Electricity Usage (kWh)
$0.06	16,912

* Assumes the project will be under the GS-1 General Service rate under SCE.

[9] Pray, Richard. 2017 National Construction Estimator. Carlsbad: Craftsman Book Company, 2017.
[10] LADWP's Small Commercial & Multi-Family Service (A-1) is approximately $0.06 per kWh of electricity Southern California Edison (SCE). Rates & Pricing Choices: General Service/Industrial Rates. https://library.sce.com/content/dam/sce-doclib/public/regulatory/historical/electric/2020/schedules/general-service-&-industrial-rates/ELECTRIC_SCHEDULES_GS-1_2020.pdf

8.1.2 Construction Equipment Fuel Estimates

Using the CalEEMod data input, the project's construction phase would consume electricity and fossil fuels as a single energy demand, that is, once construction is completed their use would cease. CARB's 2017 Emissions Factors Tables show that on average aggregate fuel consumption (gasoline and diesel fuel) would be approximately 18.5 hp-hr-gal.[11] As presented in Table 13 below, project construction activities would consume an estimated 28,878 gallons of diesel fuel.

Table 13: Construction Equipment Fuel Consumption Estimates

Phase	Number of Days	Offroad Equipment Type	Amount	Usage Hours	Horse Power	Load Factor	HP hrs/ day	Total Fuel Consumption (gal diesel fuel)[1]
Site Preparation	5	Rubber Tired Dozers	3	8	367	0.4	3,523	952
	5	Tractors/Loaders/Backhoes	4	8	84	0.37	995	269
Grading	8	Excavators	1	8	36	0.38	109	47
	8	Graders	1	8	148	0.41	485	210
	8	Rubber Tired Dozers	1	8	367	0.4	1,174	508
	8	Tractors/Loaders/Backhoes	3	8	84	0.37	746	323
Building Construction	230	Cranes	1	7	367	0.29	745	9,262
	230	Forklifts	3	8	82	0.2	394	4,893
	230	Generator Sets	1	8	14	0.74	83	1,030
	230	Tractors/Loaders/Backhoes	3	7	84	0.37	653	8,114
	230	Welders	1	8	46	0.45	166	2,059
Paving	18	Cement and Mortar Mixers	2	6	10	0.56	67	65
	18	Pavers	1	8	81	0.42	272	265
	18	Paving Equipment	2	6	89	0.36	384	374
	18	Rollers	2	6	36	0.38	164	160
	18	Tractors/Loaders/Backhoes	1	8	84	0.37	249	242
Architectural Coating	18	Air Compressors	1	6	37	0.48	107	104
CONSTRUCTION FUEL DEMAND (gallons of diesel fuel)								**28,878**

Notes:
[1]Using Carl Moyer Guidelines Table D-21 Fuel consumption rate factors (bhp-hr/gal) for engines less than 750 hp.
(Source: https://www.arb.ca.gov/msprog/moyer/guidelines/2017gl/2017_gl_appendix_d.pdf)

[11] Aggregate fuel consumption rate for all equipment was estimated at 18.5 hp-hr/day (from CARB's 2017 Emissions Factors Tables and fuel consumption rate factors as shown in Table D-21 of the Moyer Guidelines: (https://www.arb.ca.gov/msprog/moyer/guidelines/2017gl/2017_gl_appendix_d.pdf).

8.1.3 Construction Worker Fuel Estimates

It is assumed that all construction worker trips are from light duty autos (LDA) along area roadways. With respect to estimated VMT, the construction worker trips would generate an estimated 53,715 VMT. Vehicle fuel efficiencies for construction workers were estimated in the air quality and greenhouse gas analysis using information generated using CARB's EMFAC model (see Appendix C for details). Table 14 shows that an estimated 1,736 gallons of fuel would be consumed for construction worker trips.

Table 14: Construction Worker Fuel Consumption Estimates

Phase	Number of Days	Worker Trips/Day	Trip Length (miles)	Vehicle Miles Traveled	Average Vehicle Fuel Economy (mpg)	Estimated Fuel Consumption (gallons)
Site Preparation	5	17.5	18.5	1618.75	30.95	52
Grading	8	15	18.5	2,220	30.95	72
Building Construction	230	10	18.5	42,550	30.95	1,375
Paving	18	20	18.5	6,660	30.95	215
Architectural Coating	18	2	18.5	666	30.95	22
Total Construction Worker Fuel Consumption						**1,736**

Notes:
[1]Assumptions for the worker trip length and vehicle miles traveled are consistent with CalEEMod 2022.1.1.22 defaults.

8.1.4 Construction Vendor/Hauling Fuel Estimates

Tables 15 and 16 show the estimated fuel consumption for vendor and hauling during building construction and architectural coating. With respect to estimated VMT, the vendor and hauling trips would generate an estimated 15,447 VMT. For the architectural coatings it is assumed that the contractors would be responsible for bringing coatings and equipment with them in their light duty vehicles.[12] Tables 15 and 16 show that an estimated 2,384 gallons of fuel would be consumed for vendor and hauling trips.

<Tables 15 & 16, next page>

[12] Vendors delivering construction material or hauling debris from the site during grading would use medium to heavy duty vehicles with an average fuel consumption of 9.22 mpg for medium heavy-duty trucks and 6.74 mpg for heavy heavy-duty trucks (see Appendix C for details).

Table 15: Construction Vendor Fuel Consumption Estimates (MHD Trucks)[1]

Phase	Number of Days	Vendor Trips/Day	Trip Length (miles)	Vehicle Miles Traveled	Average Vehicle Fuel Economy (mpg)	Estimated Fuel Consumption (gallons)
Site Preparation	5	0	10.2	0	6.9	0
Grading	8	0	10.2	0	6.90	0
Building Construction	230	5.05	10.2	11,847	6.90	1,717
Paving	18	5	10.2	918	6.90	133
Architectural Coating	18	0	10.2	0	6.90	0
Total Vendor Fuel Consumption						**1,850**

Notes:
[1] Assumptions for the vendor trip length and vehicle miles traveled are consistent with CalEEMod 2022.1.1.22 defaults.

Table 16: Construction Hauling Fuel Consumption Estimates (HHD Trucks)[1]

Phase	Number of Days	Hauling Trips/Day	Trip Length (miles)	Vehicle Miles Traveled	Average Vehicle Fuel Economy (mpg)	Estimated Fuel Consumption (gallons)
Site Preparation	5	0	20	0	6.74	0
Grading	8	22.5	20	3,600	6.74	534
Building Construction	230	0	20	0	6.74	0
Paving	18	0	20	0	6.74	0
Architectural Coating	18	0	20	0	6.74	0
Total Construction Hauling Fuel Consumption						**534**

Notes:
[1]Assumptions for the hauling trip length and vehicle miles traveled are consistent with CalEEMod 2022.1.1.22 defaults.

8.1.5 Construction Energy Efficiency/Conservation Measures

Construction equipment used over the approximately 13-month construction phase would conform to CARB regulations and California emissions standards and is evidence of related fuel efficiencies. In addition, the CARB Airborne Toxic Control Measure limits idling times of construction vehicles to no more than five minutes, thereby minimizing unnecessary and wasteful consumption of fuel due to unproductive idling of construction equipment. Furthermore, the project has been designed in compliance with California's Energy Efficiency Standards and 2022 CALGreen Standards.

Construction of the proposed medical office development would require the typical use of energy resources. There are no unusual project characteristics or construction processes that would require the use of equipment that would be more energy intensive than is used for comparable activities; or equipment that would not conform to current emissions standards (and related fuel efficiencies).

Equipment employed in construction of the project would therefore not result in inefficient wasteful, or unnecessary consumption of fuel.

8.2 Operational Energy Demand

Energy consumption in support of or related to project operations would include transportation energy demands (energy consumed by employee and patron vehicles accessing the project site) and facilities energy demands (energy consumed by building operations and site maintenance activities).

8.2.1 Transportation Fuel Consumption

The largest source of operational energy use would be vehicle operation of customers. The site is located in a rural area. Using the CalEEMod output, an average trip for all vehicles was assumed to be 10.086 miles. To show a worst-case analysis, as the proposed project is an office project, it was assumed that vehicles would operate 365 days per year. Table 17 shows the worst-case estimated annual fuel consumption for all classes of vehicles from autos to heavy-heavy trucks.[13] Table 17 shows that an estimated 224,886 gallons of fuel would be consumed per year for the operation of the proposed project.

Table 17: Estimated Vehicle Operations Fuel Consumption

Vehicle Type	Vehicle Mix	Number of Vehicles[1]	Average Trip (miles)[2]	Daily VMT	Average Fuel Economy (mpg)	Total Gallons per Day	Total Annual Fuel Consumption (gallons)
Light Auto	Automobile	854.6	10.086	8,619	31.82	270.88	98,870
Light Truck	Automobile	88.7	10.086	895	27.16	32.95	12,027
Light Truck	Automobile	273.9	10.086	2,762	25.6	107.91	39,386
Medium Truck	Automobile	220.9	10.086	2,228	20.81	107.06	39,076
Light Heavy Truck	2-Axle Truck	42.9	10.086	433	13.81	31.34	11,440
Light Heavy Truck 10,000 lbs +	2-Axle Truck	11.4	10.086	115	14.18	8.13	2,969
Medium Heavy Truck	3-Axle Truck	18.1	10.086	183	9.58	19.06	6,957
Heavy Heavy Truck	4-Axle Truck	27.5	10.086	277	7.14	38.80	14,162
Total		1,538	--	15,512	--	616.13	--
Total Annual Fuel Consumption							**224,886**

Notes:
[1] The trip generation assessment, the project is to generate 1,538 total net new trips after reduction of existing uses. Default CalEEMod vehicle fleet mix utilized.
[2] Based on the size of the site and relative location, trips were assumed to be local rather than regional.

Trip generation generated by the proposed project are consistent with other similar commercial uses of similar scale and configuration as reflected in the CalEEMod output (Appendix A). That is, the proposed project does not propose uses or operations that would inherently result in excessive and wasteful vehicle trips, nor associated excess and wasteful vehicle energy consumption. Therefore, project

[13] Average fuel economy based on aggregate mileage calculated in EMFAC 2017 for 2023. See Appendix C for EMFAC output.

transportation energy consumption would not be considered inefficient, wasteful, or otherwise unnecessary.

8.2.2 Facility Energy Demands (Electricity and Natural Gas)

The annual natural gas and electricity demands were provided per the CalEEMod output and are provided in Table 18.

Table 18: Project Unmitigated Annual Operational Energy Demand Summary[1]

Natural Gas Demand	kBTU/year
Fast Food Restaurant with Drive Thru	146,152
Medical Office Building[2]	776,580
Pharmacy/Drugstore w/o Drive Thru	7,428
Total	930,160
Electricity Demand	**kWh/year**
Fast Food Restaurant with Drive Thru	44,850
Medical Office Building[2]	493,906
Parking Lot	12,258
Pharmacy/Drugstore w/o Drive Thru	97,686
Total	648,700

Notes:
[1]Taken from the CalEEMod 2022.1.1.22 annual output.
[2]Includes Phase A family care and lab space and all of Phase B.

As shown in Table 18, the estimated electricity demand for the proposed project is approximately 648,700 kWh per year. In 2022, the non-residential sector of the County of San Bernardino consumed approximately 10,328 million kWh of electricity.[14] In addition, the estimated natural gas consumption for the proposed project is approximately 930,160 kBTU per year. In 2022, the non-residential sector of the County of San Bernardino consumed approximately 294.8 million therms of gas.[15] Therefore, the increase in both electricity and natural gas demand from the proposed project is insignificant compared to the County's 2022 demand.

8.3 Renewable Energy and Energy Efficiency Plan Consistency

Regarding federal transportation regulations, the project site is located in an already developed area. Access to/from the project site is from existing roads. These roads are already in place so the project would not interfere with, nor otherwise obstruct intermodal transportation plans or projects that may be proposed pursuant to the ISTEA because SCAG is not planning for intermodal facilities in the project area.

[14] California Energy Commission, Electricity Consumption by County. https://ecdms.energy.ca.gov/elecbycounty.aspx
[15] California Energy Commission, Gas Consumption by County. http://ecdms.energy.ca.gov/gasbycounty.aspx

Regarding the State's Energy Plan and compliance with Title 24 CCR energy efficiency standards, the applicant is required to comply with the California Green Building Standard Code requirements for energy efficient buildings and appliances as well as utility energy efficiency programs implemented by the SCE and Southern California Gas Company.

Regarding the State's Renewable Energy Portfolio Standards, the project would be required to meet or exceed the energy standards established in the California Green Building Standards Code, Title 24, Part 11 (CALGreen). CalGreen Standards require that new buildings reduce water consumption, employ building commissioning to increase building system efficiencies, divert construction waste from landfills, and install low pollutant-emitting finish materials.

9.0 References

The following references were used in the preparing this analysis.

California Air Pollution Control Officers Association
2009 Health Risk Assessments for Proposed Land Use Projects

California Air Resources Board
2008 Resolution 08-43

2008 Recommended Approaches for Setting Interim Significance Thresholds for Greenhouse Gases under the California Environmental Quality Act

2008 ARB Recommended Interim Risk Management Policy for Inhalation-Based Residential Cancer Risk – Frequently Asked Questions

2008 Climate Change Scoping Plan, a framework for change.

2011 Supplement to the AB 32 Scoping Plan Functional Equivalent Document

2013 Revised Emission Factors for Gasoline Marketing Operations at California Gasoline Dispensing Facilities

2014 First Update to the Climate Change Scoping Plan, Building on the Framework Pursuant to AB32, the California Global Warming Solutions Act of 2006. May.

2017 California's 2017 Climate Change Scoping Plan. November.

2020 Historical Air Quality, Top 4 Summary

County of San Bernardino
2011 County of San Bernardino Greenhouse Gas Emissions Reduction Plan. September.

2007 County of San Bernardino 2007 General Plan

2007 County of San Bernardino 2007 Development Code. March 13.

Governor's Office of Planning and Research
2008 CEQA and Climate: Addressing Climate Change Through California Environmental Quality Act (CEQA) Review

2009 CEQA Guideline Sections to be Added or Amended

Mojave Desert Air Quality Management District (MDAQMD)
2016 California Environmental Quality Act (CEQA) And Federal Conformity Guidelines. August

Office of Environmental Health Hazard Assessment
2015 Air Toxics Hot Spots Program Risk Assessment Guidelines

Appendix A:

CalEEMod Emissions Output

Shiloh West Medical Detailed Report

Table of Contents

1. Basic Project Information

1.1. Basic Project Information

1.2. Land Use Types

1.3. User-Selected Emission Reduction Measures by Emissions Sector

2. Emissions Summary

2.1. Construction Emissions Compared Against Thresholds

2.2. Construction Emissions by Year, Unmitigated

2.4. Operations Emissions Compared Against Thresholds

2.5. Operations Emissions by Sector, Unmitigated

3. Construction Emissions Details

3.1. Site Preparation (2024) - Unmitigated

3.3. Grading (2024) - Unmitigated

3.5. Building Construction (2024) - Unmitigated

3.7. Building Construction (2025) - Unmitigated

3.9. Paving (2025) - Unmitigated

3.11. Architectural Coating (2025) - Unmitigated

4. Operations Emissions Details

4.1. Mobile Emissions by Land Use

4.1.1. Unmitigated

4.2. Energy

4.2.1. Electricity Emissions By Land Use - Unmitigated

4.2.3. Natural Gas Emissions By Land Use - Unmitigated

4.3. Area Emissions by Source

4.3.1. Unmitigated

4.4. Water Emissions by Land Use

4.4.1. Unmitigated

4.5. Waste Emissions by Land Use

4.5.1. Unmitigated

4.6. Refrigerant Emissions by Land Use

4.6.1. Unmitigated

4.7. Offroad Emissions By Equipment Type

4.7.1. Unmitigated

4.8. Stationary Emissions By Equipment Type

4.8.1. Unmitigated

4.9. User Defined Emissions By Equipment Type

4.9.1. Unmitigated

4.10. Soil Carbon Accumulation By Vegetation Type

4.10.1. Soil Carbon Accumulation By Vegetation Type - Unmitigated

4.10.2. Above and Belowground Carbon Accumulation by Land Use Type - Unmitigated

4.10.3. Avoided and Sequestered Emissions by Species - Unmitigated

5. Activity Data

5.1. Construction Schedule

5.2. Off-Road Equipment

5.2.1. Unmitigated

5.3. Construction Vehicles

5.3.1. Unmitigated

5.4. Vehicles

5.4.1. Construction Vehicle Control Strategies

5.5. Architectural Coatings

5.6. Dust Mitigation

5.6.1. Construction Earthmoving Activities

5.6.2. Construction Earthmoving Control Strategies

5.7. Construction Paving

5.8. Construction Electricity Consumption and Emissions Factors

5.9. Operational Mobile Sources

5.9.1. Unmitigated

5.10. Operational Area Sources

5.10.1. Hearths

5.10.1.1. Unmitigated

5.10.2. Architectural Coatings

5.10.3. Landscape Equipment

5.11. Operational Energy Consumption

5.11.1. Unmitigated

5.12. Operational Water and Wastewater Consumption

5.12.1. Unmitigated

5.13. Operational Waste Generation

5.13.1. Unmitigated

5.14. Operational Refrigeration and Air Conditioning Equipment

5.14.1. Unmitigated

5.15. Operational Off-Road Equipment

5.15.1. Unmitigated

5.16. Stationary Sources

5.16.1. Emergency Generators and Fire Pumps

5.16.2. Process Boilers

5.17. User Defined

5.18. Vegetation

5.18.1. Land Use Change

5.18.1.1. Unmitigated

5.18.1. Biomass Cover Type

5.18.1.1. Unmitigated

5.18.2. Sequestration

5.18.2.1. Unmitigated

6. Climate Risk Detailed Report

6.1. Climate Risk Summary

6.2. Initial Climate Risk Scores

6.3. Adjusted Climate Risk Scores

6.4. Climate Risk Reduction Measures

7. Health and Equity Details

7.1. CalEnviroScreen 4.0 Scores

7.2. Healthy Places Index Scores

7.3. Overall Health & Equity Scores

7.4. Health & Equity Measures

7.5. Evaluation Scorecard

7.6. Health & Equity Custom Measures

8. User Changes to Default Data

1. Basic Project Information

1.1. Basic Project Information

Data Field	Value
Project Name	Shiloh West Medical
Construction Start Date	7/1/2024
Operational Year	2025
Lead Agency	—
Land Use Scale	Project/site
Analysis Level for Defaults	County
Windspeed (m/s)	2.80
Precipitation (days)	1.40
Location	34.5072175348605, -117.39157462031335
County	San Bernardino-Mojave Desert
City	Victorville
Air District	Mojave Desert AQMD
Air Basin	Mojave Desert
TAZ	5102
EDFZ	10
Electric Utility	Southern California Edison
Gas Utility	Southwest Gas Corp.
App Version	2022.1.1.22

1.2. Land Use Types

Land Use Subtype	Size	Unit	Lot Acreage	Building Area (sq ft)	Landscape Area (sq ft)	Special Landscape Area (sq ft)	Population	Description

Medical Office Building	28.3	1000sqft	0.65	28,301	0.00	—	—	—
Pharmacy/Drugstore w/o Drive Thru	1.26	1000sqft	0.03	1,260	0.00	—	—	—
Fast Food Restaurant with Drive Thru	1.28	1000sqft	0.03	1,279	0.00	—	—	—
Parking Lot	160	Space	2.56	0.00	20,570	—	—	—

1.3. User-Selected Emission Reduction Measures by Emissions Sector

No measures selected

2. Emissions Summary

2.1. Construction Emissions Compared Against Thresholds

Criteria Pollutants (lb/day for daily, ton/yr for annual) and GHGs (lb/day for daily, MT/yr for annual)

Un/Mit.	ROG	NOx	CO	SO2	PM10E	PM10D	PM10T	PM2.5E	PM2.5D	PM2.5T	BCO2	NBCO2	CO2T	CH4	N2O	R	CO2e
Daily, Summer (Max)	—	—	—	—	—	—	—	—	—	—	—	—	—	—	—	—	—
Unmit.	9.81	36.0	34.5	0.05	1.60	7.89	9.49	1.47	3.99	5.47	—	5,556	5,556	0.23	0.28	4.21	5,579
Daily, Winter (Max)	—	—	—	—	—	—	—	—	—	—	—	—	—	—	—	—	—
Unmit.	1.26	11.5	13.8	0.02	0.50	0.17	0.67	0.46	0.04	0.50	—	2,694	2,694	0.10	0.05	0.03	2,710
Average Daily (Max)	—	—	—	—	—	—	—	—	—	—	—	—	—	—	—	—	—
Unmit.	0.98	4.31	5.62	0.01	0.18	0.23	0.40	0.16	0.10	0.26	—	1,086	1,086	0.04	0.02	0.19	1,093
Annual (Max)	—	—	—	—	—	—	—	—	—	—	—	—	—	—	—	—	—
Unmit.	0.18	0.79	1.03	< 0.005	0.03	0.04	0.07	0.03	0.02	0.05	—	180	180	0.01	< 0.005	0.03	181

2.2. Construction Emissions by Year, Unmitigated

Criteria Pollutants (lb/day for daily, ton/yr for annual) and GHGs (lb/day for daily, MT/yr for annual)

Year	ROG	NOx	CO	SO2	PM10E	PM10D	PM10T	PM2.5E	PM2.5D	PM2.5T	BCO2	NBCO2	CO2T	CH4	N2O	R	CO2e
Daily - Summer (Max)	—	—	—	—	—	—	—	—	—	—	—	—	—	—	—	—	—
2024	3.75	36.0	34.5	0.05	1.60	7.89	9.49	1.47	3.99	5.47	—	5,556	5,556	0.23	0.28	4.21	5,579
2025	9.81	10.7	13.9	0.02	0.43	0.30	0.61	0.40	0.07	0.44	—	2,705	2,705	0.10	0.05	1.50	2,722
Daily - Winter (Max)	—	—	—	—	—	—	—	—	—	—	—	—	—	—	—	—	—
2024	1.26	11.5	13.8	0.02	0.50	0.17	0.67	0.46	0.04	0.50	—	2,694	2,694	0.10	0.05	0.03	2,710
2025	1.18	10.7	13.7	0.02	0.43	0.17	0.61	0.40	0.04	0.44	—	2,688	2,688	0.10	0.05	0.03	2,704
Average Daily	—	—	—	—	—	—	—	—	—	—	—	—	—	—	—	—	—
2024	0.43	3.96	4.58	0.01	0.17	0.23	0.40	0.16	0.10	0.26	—	892	892	0.03	0.02	0.16	899
2025	0.98	4.31	5.62	0.01	0.18	0.08	0.26	0.16	0.02	0.18	—	1,086	1,086	0.04	0.02	0.19	1,093
Annual	—	—	—	—	—	—	—	—	—	—	—	—	—	—	—	—	—
2024	0.08	0.72	0.84	< 0.005	0.03	0.04	0.07	0.03	0.02	0.05	—	148	148	0.01	< 0.005	0.03	149
2025	0.18	0.79	1.03	< 0.005	0.03	0.01	0.05	0.03	< 0.005	0.03	—	180	180	0.01	< 0.005	0.03	181

2.4. Operations Emissions Compared Against Thresholds

Criteria Pollutants (lb/day for daily, ton/yr for annual) and GHGs (lb/day for daily, MT/yr for annual)

Un/Mit.	ROG	NOx	CO	SO2	PM10E	PM10D	PM10T	PM2.5E	PM2.5D	PM2.5T	BCO2	NBCO2	CO2T	CH4	N2O	R	CO2e
Daily, Summer (Max)	—	—	—	—	—	—	—	—	—	—	—	—	—	—	—	—	—
Unmit.	9.07	7.20	64.7	0.14	0.13	11.3	11.4	0.13	2.86	2.98	182	15,236	15,419	18.9	0.64	54.5	16,135

Daily, Winter (Max)	—	—	—	—	—	—	—	—	—	—	—	—	—	—	—	—	—
Unmit.	7.79	7.73	49.5	0.13	0.13	11.3	11.4	0.12	2.86	2.98	182	14,007	14,190	18.9	0.66	4.10	14,863
Average Daily (Max)	—	—	—	—	—	—	—	—	—	—	—	—	—	—	—	—	—
Unmit.	7.96	7.93	54.3	0.13	0.13	11.3	11.4	0.12	2.86	2.98	182	14,289	14,472	18.9	0.67	25.1	15,169
Annual (Max)	—	—	—	—	—	—	—	—	—	—	—	—	—	—	—	—	—
Unmit.	1.45	1.45	9.91	0.02	0.02	2.06	2.08	0.02	0.52	0.54	30.2	2,366	2,396	3.13	0.11	4.16	2,511

2.5. Operations Emissions by Sector, Unmitigated

Criteria Pollutants (lb/day for daily, ton/yr for annual) and GHGs (lb/day for daily, MT/yr for annual)

Sector	ROG	NOx	CO	SO2	PM10E	PM10D	PM10T	PM2.5E	PM2.5D	PM2.5T	BCO2	NBCO2	CO2T	CH4	N2O	R	CO2e
Daily, Summer (Max)	—	—	—	—	—	—	—	—	—	—	—	—	—	—	—	—	—
Mobile	8.12	6.93	63.1	0.14	0.11	11.3	11.4	0.10	2.86	2.96	—	13,951	13,951	0.52	0.61	51.8	14,197
Area	0.94	0.01	1.34	< 0.005	< 0.005	—	< 0.005	< 0.005	—	< 0.005	—	5.52	5.52	< 0.005	< 0.005	—	5.54
Energy	0.01	0.25	0.21	< 0.005	0.02	—	0.02	0.02	—	0.02	—	1,244	1,244	0.09	0.01	—	1,248
Water	—	—	—	—	—	—	—	—	—	—	7.72	36.6	44.3	0.79	0.02	—	69.9
Waste	—	—	—	—	—	—	—	—	—	—	175	0.00	175	17.5	0.00	—	611
Refrig.	—	—	—	—	—	—	—	—	—	—	—	—	—	—	—	2.75	2.75
Total	9.07	7.20	64.7	0.14	0.13	11.3	11.4	0.13	2.86	2.98	182	15,236	15,419	18.9	0.64	54.5	16,135
Daily, Winter (Max)	—	—	—	—	—	—	—	—	—	—	—	—	—	—	—	—	—
Mobile	7.06	7.48	49.3	0.12	0.11	11.3	11.4	0.10	2.86	2.96	—	12,727	12,727	0.55	0.63	1.34	12,931
Area	0.72	—	—	—	—	—	—	—	—	—	—	—	—	—	—	—	—

Energy	0.01	0.25	0.21	< 0.005	0.02	—	0.02	0.02	—	0.02	—	1,244	1,244	0.09	0.01	—	1,248
Water	—	—	—	—	—	—	—	—	—	—	7.72	36.6	44.3	0.79	0.02	—	69.9
Waste	—	—	—	—	—	—	—	—	—	—	175	0.00	175	17.5	0.00	—	611
Refrig.	—	—	—	—	—	—	—	—	—	—	—	—	—	—	—	2.75	2.75
Total	7.79	7.73	49.5	0.13	0.13	11.3	11.4	0.12	2.86	2.98	182	14,007	14,190	18.9	0.66	4.10	14,863
Average Daily	—	—	—	—	—	—	—	—	—	—	—	—	—	—	—	—	—
Mobile	7.13	7.67	53.4	0.13	0.11	11.3	11.4	0.10	2.86	2.96	—	13,006	13,006	0.56	0.64	22.4	13,234
Area	0.82	0.01	0.66	< 0.005	< 0.005	—	< 0.005	< 0.005	—	< 0.005	—	2.72	2.72	< 0.005	< 0.005	—	2.73
Energy	0.01	0.25	0.21	< 0.005	0.02	—	0.02	0.02	—	0.02	—	1,244	1,244	0.09	0.01	—	1,248
Water	—	—	—	—	—	—	—	—	—	—	7.72	36.6	44.3	0.79	0.02	—	69.9
Waste	—	—	—	—	—	—	—	—	—	—	175	0.00	175	17.5	0.00	—	611
Refrig.	—	—	—	—	—	—	—	—	—	—	—	—	—	—	—	2.75	2.75
Total	7.96	7.93	54.3	0.13	0.13	11.3	11.4	0.12	2.86	2.98	182	14,289	14,472	18.9	0.67	25.1	15,169
Annual	—	—	—	—	—	—	—	—	—	—	—	—	—	—	—	—	—
Mobile	1.30	1.40	9.75	0.02	0.02	2.06	2.08	0.02	0.52	0.54	—	2,153	2,153	0.09	0.11	3.70	2,191
Area	0.15	< 0.005	0.12	< 0.005	< 0.005	—	< 0.005	< 0.005	—	< 0.005	—	0.45	0.45	< 0.005	< 0.005	—	0.45
Energy	< 0.005	0.05	0.04	< 0.005	< 0.005	—	< 0.005	< 0.005	—	< 0.005	—	206	206	0.01	< 0.005	—	207
Water	—	—	—	—	—	—	—	—	—	—	1.28	6.06	7.34	0.13	< 0.005	—	11.6
Waste	—	—	—	—	—	—	—	—	—	—	28.9	0.00	28.9	2.89	0.00	—	101
Refrig.	—	—	—	—	—	—	—	—	—	—	—	—	—	—	—	0.46	0.46
Total	1.45	1.45	9.91	0.02	0.02	2.06	2.08	0.02	0.52	0.54	30.2	2,366	2,396	3.13	0.11	4.16	2,511

3. Construction Emissions Details

3.1. Site Preparation (2024) - Unmitigated

Criteria Pollutants (lb/day for daily, ton/yr for annual) and GHGs (lb/day for daily, MT/yr for annual)

Location	ROG	NOx	CO	SO2	PM10E	PM10D	PM10T	PM2.5E	PM2.5D	PM2.5T	BCO2	NBCO2	CO2T	CH4	N2O	R	CO2e
Onsite	—	—	—	—	—	—	—	—	—	—	—	—	—	—	—	—	—
Daily, Summer (Max)	—	—	—	—	—	—	—	—	—	—	—	—	—	—	—	—	—
Off-Road Equipment	3.65	36.0	32.9	0.05	1.60	—	1.60	1.47	—	1.47	—	5,296	5,296	0.21	0.04	—	5,314
Dust From Material Movement	—	—	—	—	—	7.67	7.67	—	3.94	3.94	—	—	—	—	—	—	—
Onsite truck	0.00	0.00	0.00	0.00	0.00	0.00	0.00	0.00	0.00	0.00	—	0.00	0.00	0.00	0.00	0.00	0.00
Daily, Winter (Max)	—	—	—	—	—	—	—	—	—	—	—	—	—	—	—	—	—
Average Daily	—	—	—	—	—	—	—	—	—	—	—	—	—	—	—	—	—
Off-Road Equipment	0.05	0.49	0.45	< 0.005	0.02	—	0.02	0.02	—	0.02	—	72.5	72.5	< 0.005	< 0.005	—	72.8
Dust From Material Movement	—	—	—	—	—	0.11	0.11	—	0.05	0.05	—	—	—	—	—	—	—
Onsite truck	0.00	0.00	0.00	0.00	0.00	0.00	0.00	0.00	0.00	0.00	—	0.00	0.00	0.00	0.00	0.00	0.00
Annual	—	—	—	—	—	—	—	—	—	—	—	—	—	—	—	—	—
Off-Road Equipment	0.01	0.09	0.08	< 0.005	< 0.005	—	< 0.005	< 0.005	—	< 0.005	—	12.0	12.0	< 0.005	< 0.005	—	12.1
Dust From Material Movement	—	—	—	—	—	0.02	0.02	—	0.01	0.01	—	—	—	—	—	—	—
Onsite truck	0.00	0.00	0.00	0.00	0.00	0.00	0.00	0.00	0.00	0.00	—	0.00	0.00	0.00	0.00	0.00	0.00

Offsite	—	—	—	—	—	—	—	—	—	—	—	—	—	—	—	—	—
Daily, Summer (Max)	—	—	—	—	—	—	—	—	—	—	—	—	—	—	—	—	—
Worker	0.10	0.09	1.58	0.00	0.00	0.23	0.23	0.00	0.05	0.05	—	261	261	0.01	0.01	1.02	265
Vendor	0.00	0.00	0.00	0.00	0.00	0.00	0.00	0.00	0.00	0.00	—	0.00	0.00	0.00	0.00	0.00	0.00
Hauling	0.00	0.00	0.00	0.00	0.00	0.00	0.00	0.00	0.00	0.00	—	0.00	0.00	0.00	0.00	0.00	0.00
Daily, Winter (Max)	—	—	—	—	—	—	—	—	—	—	—	—	—	—	—	—	—
Average Daily	—	—	—	—	—	—	—	—	—	—	—	—	—	—	—	—	—
Worker	< 0.005	< 0.005	0.02	0.00	0.00	< 0.005	< 0.005	0.00	< 0.005	< 0.005	—	3.25	3.25	< 0.005	< 0.005	0.01	3.30
Vendor	0.00	0.00	0.00	0.00	0.00	0.00	0.00	0.00	0.00	0.00	—	0.00	0.00	0.00	0.00	0.00	0.00
Hauling	0.00	0.00	0.00	0.00	0.00	0.00	0.00	0.00	0.00	0.00	—	0.00	0.00	0.00	0.00	0.00	0.00
Annual	—	—	—	—	—	—	—	—	—	—	—	—	—	—	—	—	—
Worker	< 0.005	< 0.005	< 0.005	0.00	0.00	< 0.005	< 0.005	0.00	< 0.005	< 0.005	—	0.54	0.54	< 0.005	< 0.005	< 0.005	0.55
Vendor	0.00	0.00	0.00	0.00	0.00	0.00	0.00	0.00	0.00	0.00	—	0.00	0.00	0.00	0.00	0.00	0.00
Hauling	0.00	0.00	0.00	0.00	0.00	0.00	0.00	0.00	0.00	0.00	—	0.00	0.00	0.00	0.00	0.00	0.00

3.3. Grading (2024) - Unmitigated

Criteria Pollutants (lb/day for daily, ton/yr for annual) and GHGs (lb/day for daily, MT/yr for annual)

Location	ROG	NOx	CO	SO2	PM10E	PM10D	PM10T	PM2.5E	PM2.5D	PM2.5T	BCO2	NBCO2	CO2T	CH4	N2O	R	CO2e
Onsite	—	—	—	—	—	—	—	—	—	—	—	—	—	—	—	—	—
Daily, Summer (Max)	—	—	—	—	—	—	—	—	—	—	—	—	—	—	—	—	—
Off-Road Equipment	1.90	18.2	18.8	0.03	0.84	—	0.84	0.77	—	0.77	—	2,958	2,958	0.12	0.02	—	2,969

Dust From Material Movement	—	—	—	—	—	2.77	2.77	—	1.34	1.34	—	—	—	—	—	—	—
Onsite truck	0.00	0.00	0.00	0.00	0.00	0.00	0.00	0.00	0.00	0.00	—	0.00	0.00	0.00	0.00	0.00	0.00
Daily, Winter (Max)	—	—	—	—	—	—	—	—	—	—	—	—	—	—	—	—	—
Average Daily	—	—	—	—	—	—	—	—	—	—	—	—	—	—	—	—	—
Off-Road Equipment	0.04	0.40	0.41	< 0.005	0.02	—	0.02	0.02	—	0.02	—	64.8	64.8	< 0.005	< 0.005	—	65.1
Dust From Material Movement	—	—	—	—	—	0.06	0.06	—	0.03	0.03	—	—	—	—	—	—	—
Onsite truck	0.00	0.00	0.00	0.00	0.00	0.00	0.00	0.00	0.00	0.00	—	0.00	0.00	0.00	0.00	0.00	0.00
Annual	—	—	—	—	—	—	—	—	—	—	—	—	—	—	—	—	—
Off-Road Equipment	0.01	0.07	0.08	< 0.005	< 0.005	—	< 0.005	< 0.005	—	< 0.005	—	10.7	10.7	< 0.005	< 0.005	—	10.8
Dust From Material Movement	—	—	—	—	—	0.01	0.01	—	0.01	0.01	—	—	—	—	—	—	—
Onsite truck	0.00	0.00	0.00	0.00	0.00	0.00	0.00	0.00	0.00	0.00	—	0.00	0.00	0.00	0.00	0.00	0.00
Offsite	—	—	—	—	—	—	—	—	—	—	—	—	—	—	—	—	—
Daily, Summer (Max)	—	—	—	—	—	—	—	—	—	—	—	—	—	—	—	—	—
Worker	0.09	0.08	1.35	0.00	0.00	0.20	0.20	0.00	0.05	0.05	—	224	224	0.01	0.01	0.87	227
Vendor	0.00	0.00	0.00	0.00	0.00	0.00	0.00	0.00	0.00	0.00	—	0.00	0.00	0.00	0.00	0.00	0.00
Hauling	0.03	1.77	0.39	0.01	0.03	0.41	0.44	0.03	0.10	0.13	—	1,567	1,567	< 0.005	0.25	3.33	1,644

Daily, Winter (Max)	—	—	—	—	—	—	—	—	—	—	—	—	—	—	—	—	—
Average Daily	—	—	—	—	—	—	—	—	—	—	—	—	—	—	—	—	—
Worker	< 0.005	< 0.005	0.02	0.00	0.00	< 0.005	< 0.005	0.00	< 0.005	< 0.005	—	4.46	4.46	< 0.005	< 0.005	0.01	4.53
Vendor	0.00	0.00	0.00	0.00	0.00	0.00	0.00	0.00	0.00	0.00	—	0.00	0.00	0.00	0.00	0.00	0.00
Hauling	< 0.005	0.04	0.01	< 0.005	< 0.005	0.01	0.01	< 0.005	< 0.005	< 0.005	—	34.4	34.4	< 0.005	0.01	0.03	36.0
Annual	—	—	—	—	—	—	—	—	—	—	—	—	—	—	—	—	—
Worker	< 0.005	< 0.005	< 0.005	0.00	0.00	< 0.005	< 0.005	0.00	< 0.005	< 0.005	—	0.74	0.74	< 0.005	< 0.005	< 0.005	0.75
Vendor	0.00	0.00	0.00	0.00	0.00	0.00	0.00	0.00	0.00	0.00	—	0.00	0.00	0.00	0.00	0.00	0.00
Hauling	< 0.005	0.01	< 0.005	< 0.005	< 0.005	< 0.005	< 0.005	< 0.005	< 0.005	< 0.005	—	5.69	5.69	< 0.005	< 0.005	0.01	5.96

3.5. Building Construction (2024) - Unmitigated

Criteria Pollutants (lb/day for daily, ton/yr for annual) and GHGs (lb/day for daily, MT/yr for annual)

Location	ROG	NOx	CO	SO2	PM10E	PM10D	PM10T	PM2.5E	PM2.5D	PM2.5T	BCO2	NBCO2	CO2T	CH4	N2O	R	CO2e
Onsite	—	—	—	—	—	—	—	—	—	—	—	—	—	—	—	—	—
Daily, Summer (Max)	—	—	—	—	—	—	—	—	—	—	—	—	—	—	—	—	—
Off-Road Equipment	1.20	11.2	13.1	0.02	0.50	—	0.50	0.46	—	0.46	—	2,398	2,398	0.10	0.02	—	2,406
Onsite truck	0.00	0.00	0.00	0.00	0.00	0.00	0.00	0.00	0.00	0.00	—	0.00	0.00	0.00	0.00	0.00	0.00
Daily, Winter (Max)	—	—	—	—	—	—	—	—	—	—	—	—	—	—	—	—	—
Off-Road Equipment	1.20	11.2	13.1	0.02	0.50	—	0.50	0.46	—	0.46	—	2,398	2,398	0.10	0.02	—	2,406
Onsite truck	0.00	0.00	0.00	0.00	0.00	0.00	0.00	0.00	0.00	0.00	—	0.00	0.00	0.00	0.00	0.00	0.00

Average Daily	—	—	—	—	—	—	—	—	—	—	—	—	—	—	—	—	—
Off-Road Equipment	0.32	2.96	3.46	0.01	0.13	—	0.13	0.12	—	0.12	—	633	633	0.03	0.01	—	636
Onsite truck	0.00	0.00	0.00	0.00	0.00	0.00	0.00	0.00	0.00	0.00	—	0.00	0.00	0.00	0.00	0.00	0.00
Annual	—	—	—	—	—	—	—	—	—	—	—	—	—	—	—	—	—
Off-Road Equipment	0.06	0.54	0.63	< 0.005	0.02	—	0.02	0.02	—	0.02	—	105	105	< 0.005	< 0.005	—	105
Onsite truck	0.00	0.00	0.00	0.00	0.00	0.00	0.00	0.00	0.00	0.00	—	0.00	0.00	0.00	0.00	0.00	0.00
Offsite	—	—	—	—	—	—	—	—	—	—	—	—	—	—	—	—	—
Daily, Summer (Max)	—	—	—	—	—	—	—	—	—	—	—	—	—	—	—	—	—
Worker	0.06	0.05	0.90	0.00	0.00	0.13	0.13	0.00	0.03	0.03	—	149	149	0.01	< 0.005	0.58	151
Vendor	0.01	0.17	0.08	< 0.005	< 0.005	0.04	0.05	< 0.005	0.01	0.01	—	164	164	< 0.005	0.02	0.44	171
Hauling	0.00	0.00	0.00	0.00	0.00	0.00	0.00	0.00	0.00	0.00	—	0.00	0.00	0.00	0.00	0.00	0.00
Daily, Winter (Max)	—	—	—	—	—	—	—	—	—	—	—	—	—	—	—	—	—
Worker	0.05	0.06	0.61	0.00	0.00	0.13	0.13	0.00	0.03	0.03	—	132	132	0.01	< 0.005	0.02	133
Vendor	0.01	0.18	0.08	< 0.005	< 0.005	0.04	0.05	< 0.005	0.01	0.01	—	164	164	< 0.005	0.02	0.01	171
Hauling	0.00	0.00	0.00	0.00	0.00	0.00	0.00	0.00	0.00	0.00	—	0.00	0.00	0.00	0.00	0.00	0.00
Average Daily	—	—	—	—	—	—	—	—	—	—	—	—	—	—	—	—	—
Worker	0.01	0.02	0.18	0.00	0.00	0.03	0.03	0.00	0.01	0.01	—	35.9	35.9	< 0.005	< 0.005	0.07	36.4
Vendor	< 0.005	0.05	0.02	< 0.005	< 0.005	0.01	0.01	< 0.005	< 0.005	< 0.005	—	43.4	43.4	< 0.005	0.01	0.05	45.1
Hauling	0.00	0.00	0.00	0.00	0.00	0.00	0.00	0.00	0.00	0.00	—	0.00	0.00	0.00	0.00	0.00	0.00
Annual	—	—	—	—	—	—	—	—	—	—	—	—	—	—	—	—	—
Worker	< 0.005	< 0.005	0.03	0.00	0.00	0.01	0.01	0.00	< 0.005	< 0.005	—	5.94	5.94	< 0.005	< 0.005	0.01	6.02

Vendor	< 0.005	0.01	< 0.005	< 0.005	< 0.005	< 0.005	< 0.005	< 0.005	< 0.005	< 0.005	—	7.18	7.18	< 0.005	< 0.005	0.01	7.47
Hauling	0.00	0.00	0.00	0.00	0.00	0.00	0.00	0.00	0.00	0.00	—	0.00	0.00	0.00	0.00	0.00	0.00

3.7. Building Construction (2025) - Unmitigated

Criteria Pollutants (lb/day for daily, ton/yr for annual) and GHGs (lb/day for daily, MT/yr for annual)

Location	ROG	NOx	CO	SO2	PM10E	PM10D	PM10T	PM2.5E	PM2.5D	PM2.5T	BCO2	NBCO2	CO2T	CH4	N2O	R	CO2e
Onsite	—	—	—	—	—	—	—	—	—	—	—	—	—	—	—	—	—
Daily, Summer (Max)	—	—	—	—	—	—	—	—	—	—	—	—	—	—	—	—	—
Off-Road Equipment	1.13	10.4	13.0	0.02	0.43	—	0.43	0.40	—	0.40	—	2,398	2,398	0.10	0.02	—	2,406
Onsite truck	0.00	0.00	0.00	0.00	0.00	0.00	0.00	0.00	0.00	0.00	—	0.00	0.00	0.00	0.00	0.00	0.00
Daily, Winter (Max)	—	—	—	—	—	—	—	—	—	—	—	—	—	—	—	—	—
Off-Road Equipment	1.13	10.4	13.0	0.02	0.43	—	0.43	0.40	—	0.40	—	2,398	2,398	0.10	0.02	—	2,406
Onsite truck	0.00	0.00	0.00	0.00	0.00	0.00	0.00	0.00	0.00	0.00	—	0.00	0.00	0.00	0.00	0.00	0.00
Average Daily	—	—	—	—	—	—	—	—	—	—	—	—	—	—	—	—	—
Off-Road Equipment	0.41	3.84	4.80	0.01	0.16	—	0.16	0.15	—	0.15	—	882	882	0.04	0.01	—	885
Onsite truck	0.00	0.00	0.00	0.00	0.00	0.00	0.00	0.00	0.00	0.00	—	0.00	0.00	0.00	0.00	0.00	0.00
Annual	—	—	—	—	—	—	—	—	—	—	—	—	—	—	—	—	—
Off-Road Equipment	0.08	0.70	0.88	< 0.005	0.03	—	0.03	0.03	—	0.03	—	146	146	0.01	< 0.005	—	147
Onsite truck	0.00	0.00	0.00	0.00	0.00	0.00	0.00	0.00	0.00	0.00	—	0.00	0.00	0.00	0.00	0.00	0.00

Offsite	—	—	—	—	—	—	—	—	—	—	—	—	—	—	—	—	—
Daily, Summer (Max)	—	—	—	—	—	—	—	—	—	—	—	—	—	—	—	—	—
Worker	0.05	0.05	0.83	0.00	0.00	0.13	0.13	0.00	0.03	0.03	—	146	146	0.01	< 0.005	0.53	148
Vendor	0.01	0.16	0.07	< 0.005	< 0.005	0.04	0.05	< 0.005	0.01	0.01	—	161	161	< 0.005	0.02	0.44	168
Hauling	0.00	0.00	0.00	0.00	0.00	0.00	0.00	0.00	0.00	0.00	—	0.00	0.00	0.00	0.00	0.00	0.00
Daily, Winter (Max)	—	—	—	—	—	—	—	—	—	—	—	—	—	—	—	—	—
Worker	0.04	0.05	0.56	0.00	0.00	0.13	0.13	0.00	0.03	0.03	—	129	129	0.01	< 0.005	0.01	131
Vendor	0.01	0.17	0.07	< 0.005	< 0.005	0.04	0.05	< 0.005	0.01	0.01	—	161	161	< 0.005	0.02	0.01	168
Hauling	0.00	0.00	0.00	0.00	0.00	0.00	0.00	0.00	0.00	0.00	—	0.00	0.00	0.00	0.00	0.00	0.00
Average Daily	—	—	—	—	—	—	—	—	—	—	—	—	—	—	—	—	—
Worker	0.02	0.02	0.23	0.00	0.00	0.05	0.05	0.00	0.01	0.01	—	48.9	48.9	< 0.005	< 0.005	0.08	49.6
Vendor	< 0.005	0.06	0.03	< 0.005	< 0.005	0.02	0.02	< 0.005	< 0.005	0.01	—	59.3	59.3	< 0.005	0.01	0.07	61.7
Hauling	0.00	0.00	0.00	0.00	0.00	0.00	0.00	0.00	0.00	0.00	—	0.00	0.00	0.00	0.00	0.00	0.00
Annual	—	—	—	—	—	—	—	—	—	—	—	—	—	—	—	—	—
Worker	< 0.005	< 0.005	0.04	0.00	0.00	0.01	0.01	0.00	< 0.005	< 0.005	—	8.09	8.09	< 0.005	< 0.005	0.01	8.21
Vendor	< 0.005	0.01	< 0.005	< 0.005	< 0.005	< 0.005	< 0.005	< 0.005	< 0.005	< 0.005	—	9.81	9.81	< 0.005	< 0.005	0.01	10.2
Hauling	0.00	0.00	0.00	0.00	0.00	0.00	0.00	0.00	0.00	0.00	—	0.00	0.00	0.00	0.00	0.00	0.00

3.9. Paving (2025) - Unmitigated

Criteria Pollutants (lb/day for daily, ton/yr for annual) and GHGs (lb/day for daily, MT/yr for annual)

Location	ROG	NOx	CO	SO2	PM10E	PM10D	PM10T	PM2.5E	PM2.5D	PM2.5T	BCO2	NBCO2	CO2T	CH4	N2O	R	CO2e
Onsite	—	—	—	—	—	—	—	—	—	—	—	—	—	—	—	—	—
Daily, Summer (Max)	—	—	—	—	—	—	—	—	—	—	—	—	—	—	—	—	—

Off-Road Equipment	0.71	6.52	8.84	0.01	0.29	—	0.29	0.26	—	0.26	—	1,351	1,351	0.05	0.01	—	1,355
Paving	0.37	—	—	—	—	—	—	—	—	—	—	—	—	—	—	—	—
Onsite truck	0.00	0.00	0.00	0.00	0.00	0.00	0.00	0.00	0.00	0.00	—	0.00	0.00	0.00	0.00	0.00	0.00
Daily, Winter (Max)	—	—	—	—	—	—	—	—	—	—	—	—	—	—	—	—	—
Average Daily	—	—	—	—	—	—	—	—	—	—	—	—	—	—	—	—	—
Off-Road Equipment	0.04	0.32	0.44	< 0.005	0.01	—	0.01	0.01	—	0.01	—	66.6	66.6	< 0.005	< 0.005	—	66.8
Paving	0.02	—	—	—	—	—	—	—	—	—	—	—	—	—	—	—	—
Onsite truck	0.00	0.00	0.00	0.00	0.00	0.00	0.00	0.00	0.00	0.00	—	0.00	0.00	0.00	0.00	0.00	0.00
Annual	—	—	—	—	—	—	—	—	—	—	—	—	—	—	—	—	—
Off-Road Equipment	0.01	0.06	0.08	< 0.005	< 0.005	—	< 0.005	< 0.005	—	< 0.005	—	11.0	11.0	< 0.005	< 0.005	—	11.1
Paving	< 0.005	—	—	—	—	—	—	—	—	—	—	—	—	—	—	—	—
Onsite truck	0.00	0.00	0.00	0.00	0.00	0.00	0.00	0.00	0.00	0.00	—	0.00	0.00	0.00	0.00	0.00	0.00
Offsite	—	—	—	—	—	—	—	—	—	—	—	—	—	—	—	—	—
Daily, Summer (Max)	—	—	—	—	—	—	—	—	—	—	—	—	—	—	—	—	—
Worker	0.11	0.10	1.66	0.00	0.00	0.26	0.26	0.00	0.06	0.06	—	292	292	0.01	0.01	1.07	296
Vendor	0.01	0.16	0.07	< 0.005	< 0.005	0.04	0.05	< 0.005	0.01	0.01	—	159	159	< 0.005	0.02	0.44	166
Hauling	0.00	0.00	0.00	0.00	0.00	0.00	0.00	0.00	0.00	0.00	—	0.00	0.00	0.00	0.00	0.00	0.00
Daily, Winter (Max)	—	—	—	—	—	—	—	—	—	—	—	—	—	—	—	—	—
Average Daily	—	—	—	—	—	—	—	—	—	—	—	—	—	—	—	—	—

Worker	< 0.005	0.01	0.06	0.00	0.00	0.01	0.01	0.00	< 0.005	< 0.005	—	13.1	13.1	< 0.005	< 0.005	0.02	13.3
Vendor	< 0.005	0.01	< 0.005	< 0.005	< 0.005	< 0.005	< 0.005	< 0.005	< 0.005	< 0.005	—	7.86	7.86	< 0.005	< 0.005	0.01	8.18
Hauling	0.00	0.00	0.00	0.00	0.00	0.00	0.00	0.00	0.00	0.00	—	0.00	0.00	0.00	0.00	0.00	0.00
Annual	—	—	—	—	—	—	—	—	—	—	—	—	—	—	—	—	—
Worker	< 0.005	< 0.005	0.01	0.00	0.00	< 0.005	< 0.005	0.00	< 0.005	< 0.005	—	2.17	2.17	< 0.005	< 0.005	< 0.005	2.20
Vendor	< 0.005	< 0.005	< 0.005	< 0.005	< 0.005	< 0.005	< 0.005	< 0.005	< 0.005	< 0.005	—	1.30	1.30	< 0.005	< 0.005	< 0.005	1.35
Hauling	0.00	0.00	0.00	0.00	0.00	0.00	0.00	0.00	0.00	0.00	—	0.00	0.00	0.00	0.00	0.00	0.00

3.11. Architectural Coating (2025) - Unmitigated

Criteria Pollutants (lb/day for daily, ton/yr for annual) and GHGs (lb/day for daily, MT/yr for annual)

Location	ROG	NOx	CO	SO2	PM10E	PM10D	PM10T	PM2.5E	PM2.5D	PM2.5T	BCO2	NBCO2	CO2T	CH4	N2O	R	CO2e
Onsite	—	—	—	—	—	—	—	—	—	—	—	—	—	—	—	—	—
Daily, Summer (Max)	—	—	—	—	—	—	—	—	—	—	—	—	—	—	—	—	—
Off-Road Equipment	0.13	0.88	1.14	< 0.005	0.03	—	0.03	0.03	—	0.03	—	134	134	0.01	< 0.005	—	134
Architectural Coatings	9.67	—	—	—	—	—	—	—	—	—	—	—	—	—	—	—	—
Onsite truck	0.00	0.00	0.00	0.00	0.00	0.00	0.00	0.00	0.00	0.00	—	0.00	0.00	0.00	0.00	0.00	0.00
Daily, Winter (Max)	—	—	—	—	—	—	—	—	—	—	—	—	—	—	—	—	—
Average Daily	—	—	—	—	—	—	—	—	—	—	—	—	—	—	—	—	—
Off-Road Equipment	0.01	0.04	0.06	< 0.005	< 0.005	—	< 0.005	< 0.005	—	< 0.005	—	6.58	6.58	< 0.005	< 0.005	—	6.61
Architectural Coatings	0.48	—	—	—	—	—	—	—	—	—	—	—	—	—	—	—	—

Onsite truck	0.00	0.00	0.00	0.00	0.00	0.00	0.00	0.00	0.00	0.00	—	0.00	0.00	0.00	0.00	0.00	0.00
Annual	—	—	—	—	—	—	—	—	—	—	—	—	—	—	—	—	—
Off-Road Equipment	< 0.005	0.01	0.01	< 0.005	< 0.005	—	< 0.005	< 0.005	—	< 0.005	—	1.09	1.09	< 0.005	< 0.005	—	1.09
Architectural Coatings	0.09	—	—	—	—	—	—	—	—	—	—	—	—	—	—	—	—
Onsite truck	0.00	0.00	0.00	0.00	0.00	0.00	0.00	0.00	0.00	0.00	—	0.00	0.00	0.00	0.00	0.00	0.00
Offsite	—	—	—	—	—	—	—	—	—	—	—	—	—	—	—	—	—
Daily, Summer (Max)	—	—	—	—	—	—	—	—	—	—	—	—	—	—	—	—	—
Worker	0.01	0.01	0.17	0.00	0.00	0.03	0.03	0.00	0.01	0.01	—	29.2	29.2	< 0.005	< 0.005	0.11	29.6
Vendor	0.00	0.00	0.00	0.00	0.00	0.00	0.00	0.00	0.00	0.00	—	0.00	0.00	0.00	0.00	0.00	0.00
Hauling	0.00	0.00	0.00	0.00	0.00	0.00	0.00	0.00	0.00	0.00	—	0.00	0.00	0.00	0.00	0.00	0.00
Daily, Winter (Max)	—	—	—	—	—	—	—	—	—	—	—	—	—	—	—	—	—
Average Daily	—	—	—	—	—	—	—	—	—	—	—	—	—	—	—	—	—
Worker	< 0.005	< 0.005	0.01	0.00	0.00	< 0.005	< 0.005	0.00	< 0.005	< 0.005	—	1.31	1.31	< 0.005	< 0.005	< 0.005	1.33
Vendor	0.00	0.00	0.00	0.00	0.00	0.00	0.00	0.00	0.00	0.00	—	0.00	0.00	0.00	0.00	0.00	0.00
Hauling	0.00	0.00	0.00	0.00	0.00	0.00	0.00	0.00	0.00	0.00	—	0.00	0.00	0.00	0.00	0.00	0.00
Annual	—	—	—	—	—	—	—	—	—	—	—	—	—	—	—	—	—
Worker	< 0.005	< 0.005	< 0.005	0.00	0.00	< 0.005	< 0.005	0.00	< 0.005	< 0.005	—	0.22	0.22	< 0.005	< 0.005	< 0.005	0.22
Vendor	0.00	0.00	0.00	0.00	0.00	0.00	0.00	0.00	0.00	0.00	—	0.00	0.00	0.00	0.00	0.00	0.00
Hauling	0.00	0.00	0.00	0.00	0.00	0.00	0.00	0.00	0.00	0.00	—	0.00	0.00	0.00	0.00	0.00	0.00

4. Operations Emissions Details

4.1. Mobile Emissions by Land Use

4.1.1. Unmitigated

Mobile source emissions results are presented in Sections 2.6. No further detailed breakdown of emissions is available.

4.2. Energy

4.2.1. Electricity Emissions By Land Use - Unmitigated

Criteria Pollutants (lb/day for daily, ton/yr for annual) and GHGs (lb/day for daily, MT/yr for annual)

Land Use	ROG	NOx	CO	SO2	PM10E	PM10D	PM10T	PM2.5E	PM2.5D	PM2.5T	BCO2	NBCO2	CO2T	CH4	N2O	R	CO2e
Daily, Summer (Max)	—	—	—	—	—	—	—	—	—	—	—	—	—	—	—	—	—
Medical Office Building	—	—	—	—	—	—	—	—	—	—	—	720	720	0.04	0.01	—	723
Pharmacy/Drugstore w/o Drive Thru	—	—	—	—	—	—	—	—	—	—	—	17.9	17.9	< 0.005	< 0.005	—	17.9
Fast Food Restaurant with Drive Thru	—	—	—	—	—	—	—	—	—	—	—	65.4	65.4	< 0.005	< 0.005	—	65.6
Parking Lot	—	—	—	—	—	—	—	—	—	—	—	142	142	0.01	< 0.005	—	143
Total	—	—	—	—	—	—	—	—	—	—	—	945	945	0.06	0.01	—	949
Daily, Winter (Max)	—	—	—	—	—	—	—	—	—	—	—	—	—	—	—	—	—

Medical Office Building	—	—	—	—	—	—	—	—	—	—	—	720	720	0.04	0.01	—	723
Pharmacy/Drugstore w/o Drive Thru	—	—	—	—	—	—	—	—	—	—	—	17.9	17.9	< 0.005	< 0.005	—	17.9
Fast Food Restaurant with Drive Thru	—	—	—	—	—	—	—	—	—	—	—	65.4	65.4	< 0.005	< 0.005	—	65.6
Parking Lot	—	—	—	—	—	—	—	—	—	—	—	142	142	0.01	< 0.005	—	143
Total	—	—	—	—	—	—	—	—	—	—	—	945	945	0.06	0.01	—	949
Annual	—	—	—	—	—	—	—	—	—	—	—	—	—	—	—	—	—
Medical Office Building	—	—	—	—	—	—	—	—	—	—	—	119	119	0.01	< 0.005	—	120
Pharmacy/Drugstore w/o Drive Thru	—	—	—	—	—	—	—	—	—	—	—	2.96	2.96	< 0.005	< 0.005	—	2.97
Fast Food Restaurant with Drive Thru	—	—	—	—	—	—	—	—	—	—	—	10.8	10.8	< 0.005	< 0.005	—	10.9
Parking Lot	—	—	—	—	—	—	—	—	—	—	—	23.6	23.6	< 0.005	< 0.005	—	23.7
Total	—	—	—	—	—	—	—	—	—	—	—	157	157	0.01	< 0.005	—	157

4.2.3. Natural Gas Emissions By Land Use - Unmitigated

Criteria Pollutants (lb/day for daily, ton/yr for annual) and GHGs (lb/day for daily, MT/yr for annual)

Land Use	ROG	NOx	CO	SO2	PM10E	PM10D	PM10T	PM2.5E	PM2.5D	PM2.5T	BCO2	NBCO2	CO2T	CH4	N2O	R	CO2e

Daily, Summer (Max)	—	—	—	—	—	—	—	—	—	—	—	—	—	—	—	—	—
Medical Office Building	0.01	0.21	0.18	< 0.005	0.02	—	0.02	0.02	—	0.02	—	249	249	0.02	< 0.005	—	250
Pharmacy/Drugstore w/o Drive Thru	< 0.005	< 0.005	< 0.005	< 0.005	< 0.005	—	< 0.005	< 0.005	—	< 0.005	—	2.38	2.38	< 0.005	< 0.005	—	2.39
Fast Food Restaurant with Drive Thru	< 0.005	0.04	0.03	< 0.005	< 0.005	—	< 0.005	< 0.005	—	< 0.005	—	46.8	46.8	< 0.005	< 0.005	—	47.0
Parking Lot	0.00	0.00	0.00	0.00	0.00	—	0.00	0.00	—	0.00	—	0.00	0.00	0.00	0.00	—	0.00
Total	0.01	0.25	0.21	< 0.005	0.02	—	0.02	0.02	—	0.02	—	298	298	0.03	< 0.005	—	299
Daily, Winter (Max)	—	—	—	—	—	—	—	—	—	—	—	—	—	—	—	—	—
Medical Office Building	0.01	0.21	0.18	< 0.005	0.02	—	0.02	0.02	—	0.02	—	249	249	0.02	< 0.005	—	250
Pharmacy/Drugstore w/o Drive Thru	< 0.005	< 0.005	< 0.005	< 0.005	< 0.005	—	< 0.005	< 0.005	—	< 0.005	—	2.38	2.38	< 0.005	< 0.005	—	2.39
Fast Food Restaurant with Drive Thru	< 0.005	0.04	0.03	< 0.005	< 0.005	—	< 0.005	< 0.005	—	< 0.005	—	46.8	46.8	< 0.005	< 0.005	—	47.0
Parking Lot	0.00	0.00	0.00	0.00	0.00	—	0.00	0.00	—	0.00	—	0.00	0.00	0.00	0.00	—	0.00
Total	0.01	0.25	0.21	< 0.005	0.02	—	0.02	0.02	—	0.02	—	298	298	0.03	< 0.005	—	299

Annual	—	—	—	—	—	—	—	—	—	—	—	—	—	—	—	—	—
Medical Office Building	< 0.005	0.04	0.03	< 0.005	< 0.005	—	< 0.005	< 0.005	—	< 0.005	—	41.2	41.2	< 0.005	< 0.005	—	41.3
Pharmacy/Drugstore w/o Drive Thru	< 0.005	< 0.005	< 0.005	< 0.005	< 0.005	—	< 0.005	< 0.005	—	< 0.005	—	0.39	0.39	< 0.005	< 0.005	—	0.40
Fast Food Restaurant with Drive Thru	< 0.005	0.01	0.01	< 0.005	< 0.005	—	< 0.005	< 0.005	—	< 0.005	—	7.75	7.75	< 0.005	< 0.005	—	7.78
Parking Lot	0.00	0.00	0.00	0.00	0.00	—	0.00	0.00	—	0.00	—	0.00	0.00	0.00	0.00	—	0.00
Total	< 0.005	0.05	0.04	< 0.005	< 0.005	—	< 0.005	< 0.005	—	< 0.005	—	49.4	49.4	< 0.005	< 0.005	—	49.5

4.3. Area Emissions by Source

4.3.1. Unmitigated

Criteria Pollutants (lb/day for daily, ton/yr for annual) and GHGs (lb/day for daily, MT/yr for annual)

Source	ROG	NOx	CO	SO2	PM10E	PM10D	PM10T	PM2.5E	PM2.5D	PM2.5T	BCO2	NBCO2	CO2T	CH4	N2O	R	CO2e
Daily, Summer (Max)	—	—	—	—	—	—	—	—	—	—	—	—	—	—	—	—	—
Consumer Products	0.67	—	—	—	—	—	—	—	—	—	—	—	—	—	—	—	—
Architectural Coatings	0.05	—	—	—	—	—	—	—	—	—	—	—	—	—	—	—	—
Landscape Equipment	0.22	0.01	1.34	< 0.005	< 0.005	—	< 0.005	< 0.005	—	< 0.005	—	5.52	5.52	< 0.005	< 0.005	—	5.54

Total	0.94	0.01	1.34	< 0.005	< 0.005	—	< 0.005	< 0.005	—	< 0.005	—	5.52	5.52	< 0.005	< 0.005	—	5.54
Daily, Winter (Max)	—	—	—	—	—	—	—	—	—	—	—	—	—	—	—	—	—
Consumer Products	0.67	—	—	—	—	—	—	—	—	—	—	—	—	—	—	—	—
Architectural Coatings	0.05	—	—	—	—	—	—	—	—	—	—	—	—	—	—	—	—
Total	0.72	—	—	—	—	—	—	—	—	—	—	—	—	—	—	—	—
Annual	—	—	—	—	—	—	—	—	—	—	—	—	—	—	—	—	—
Consumer Products	0.12	—	—	—	—	—	—	—	—	—	—	—	—	—	—	—	—
Architectural Coatings	0.01	—	—	—	—	—	—	—	—	—	—	—	—	—	—	—	—
Landscape Equipment	0.02	< 0.005	0.12	< 0.005	< 0.005	—	< 0.005	< 0.005	—	< 0.005	—	0.45	0.45	< 0.005	< 0.005	—	0.45
Total	0.15	< 0.005	0.12	< 0.005	< 0.005	—	< 0.005	< 0.005	—	< 0.005	—	0.45	0.45	< 0.005	< 0.005	—	0.45

4.4. Water Emissions by Land Use

4.4.1. Unmitigated

Criteria Pollutants (lb/day for daily, ton/yr for annual) and GHGs (lb/day for daily, MT/yr for annual)

Land Use	ROG	NOx	CO	SO2	PM10E	PM10D	PM10T	PM2.5E	PM2.5D	PM2.5T	BCO2	NBCO2	CO2T	CH4	N2O	R	CO2e
Daily, Summer (Max)	—	—	—	—	—	—	—	—	—	—	—	—	—	—	—	—	—

Medical Office Building	—	—	—	—	—	—	—	—	—	—	6.80	29.8	36.6	0.70	0.02	—	59.1
Pharmacy/Drugstore w/o Drive Thru	—	—	—	—	—	—	—	—	—	—	0.17	0.74	0.92	0.02	< 0.005	—	1.48
Fast Food Restaurant with Drive Thru	—	—	—	—	—	—	—	—	—	—	0.74	3.26	4.00	0.08	< 0.005	—	6.46
Parking Lot	—	—	—	—	—	—	—	—	—	—	0.00	2.81	2.81	< 0.005	< 0.005	—	2.82
Total	—	—	—	—	—	—	—	—	—	—	7.72	36.6	44.3	0.79	0.02	—	69.9
Daily, Winter (Max)	—	—	—	—	—	—	—	—	—	—	—	—	—	—	—	—	—
Medical Office Building	—	—	—	—	—	—	—	—	—	—	6.80	29.8	36.6	0.70	0.02	—	59.1
Pharmacy/Drugstore w/o Drive Thru	—	—	—	—	—	—	—	—	—	—	0.17	0.74	0.92	0.02	< 0.005	—	1.48
Fast Food Restaurant with Drive Thru	—	—	—	—	—	—	—	—	—	—	0.74	3.26	4.00	0.08	< 0.005	—	6.46
Parking Lot	—	—	—	—	—	—	—	—	—	—	0.00	2.81	2.81	< 0.005	< 0.005	—	2.82
Total	—	—	—	—	—	—	—	—	—	—	7.72	36.6	44.3	0.79	0.02	—	69.9
Annual	—	—	—	—	—	—	—	—	—	—	—	—	—	—	—	—	—

Medical Office Building	—	—	—	—	—	—	—	—	—	—	1.13	4.93	6.06	0.12	< 0.005	—	9.79
Pharmacy/Drugstore w/o Drive Thru	—	—	—	—	—	—	—	—	—	—	0.03	0.12	0.15	< 0.005	< 0.005	—	0.24
Fast Food Restaurant with Drive Thru	—	—	—	—	—	—	—	—	—	—	0.12	0.54	0.66	0.01	< 0.005	—	1.07
Parking Lot	—	—	—	—	—	—	—	—	—	—	0.00	0.47	0.47	< 0.005	< 0.005	—	0.47
Total	—	—	—	—	—	—	—	—	—	—	1.28	6.06	7.34	0.13	< 0.005	—	11.6

4.5. Waste Emissions by Land Use

4.5.1. Unmitigated

Criteria Pollutants (lb/day for daily, ton/yr for annual) and GHGs (lb/day for daily, MT/yr for annual)

Land Use	ROG	NOx	CO	SO2	PM10E	PM10D	PM10T	PM2.5E	PM2.5D	PM2.5T	BCO2	NBCO2	CO2T	CH4	N2O	R	CO2e
Daily, Summer (Max)	—	—	—	—	—	—	—	—	—	—	—	—	—	—	—	—	—
Medical Office Building	—	—	—	—	—	—	—	—	—	—	165	0.00	165	16.5	0.00	—	576
Pharmacy/Drugstore w/o Drive Thru	—	—	—	—	—	—	—	—	—	—	2.04	0.00	2.04	0.20	0.00	—	7.14

Fast Food Restaurant with Drive Thru	—	—	—	—	—	—	—	—	—	—	7.94	0.00	7.94	0.79	0.00	—	27.8
Parking Lot	—	—	—	—	—	—	—	—	—	—	0.00	0.00	0.00	0.00	0.00	—	0.00
Total	—	—	—	—	—	—	—	—	—	—	175	0.00	175	17.5	0.00	—	611
Daily, Winter (Max)	—	—	—	—	—	—	—	—	—	—	—	—	—	—	—	—	—
Medical Office Building	—	—	—	—	—	—	—	—	—	—	165	0.00	165	16.5	0.00	—	576
Pharmacy/Drugstore w/o Drive Thru	—	—	—	—	—	—	—	—	—	—	2.04	0.00	2.04	0.20	0.00	—	7.14
Fast Food Restaurant with Drive Thru	—	—	—	—	—	—	—	—	—	—	7.94	0.00	7.94	0.79	0.00	—	27.8
Parking Lot	—	—	—	—	—	—	—	—	—	—	0.00	0.00	0.00	0.00	0.00	—	0.00
Total	—	—	—	—	—	—	—	—	—	—	175	0.00	175	17.5	0.00	—	611
Annual	—	—	—	—	—	—	—	—	—	—	—	—	—	—	—	—	—
Medical Office Building	—	—	—	—	—	—	—	—	—	—	27.3	0.00	27.3	2.73	0.00	—	95.4
Pharmacy/Drugstore w/o Drive Thru	—	—	—	—	—	—	—	—	—	—	0.34	0.00	0.34	0.03	0.00	—	1.18

Fast Food Restaurant with Drive Thru	—	—	—	—	—	—	—	—	—	—	1.31	0.00	1.31	0.13	0.00	—	4.60
Parking Lot	—	—	—	—	—	—	—	—	—	—	0.00	0.00	0.00	0.00	0.00	—	0.00
Total	—	—	—	—	—	—	—	—	—	—	28.9	0.00	28.9	2.89	0.00	—	101

4.6. Refrigerant Emissions by Land Use

4.6.1. Unmitigated

Criteria Pollutants (lb/day for daily, ton/yr for annual) and GHGs (lb/day for daily, MT/yr for annual)

Land Use	ROG	NOx	CO	SO2	PM10E	PM10D	PM10T	PM2.5E	PM2.5D	PM2.5T	BCO2	NBCO2	CO2T	CH4	N2O	R	CO2e
Daily, Summer (Max)	—	—	—	—	—	—	—	—	—	—	—	—	—	—	—	—	—
Medical Office Building	—	—	—	—	—	—	—	—	—	—	—	—	—	—	—	0.72	0.72
Pharmacy/Drugstore w/o Drive Thru	—	—	—	—	—	—	—	—	—	—	—	—	—	—	—	0.03	0.03
Fast Food Restaurant with Drive Thru	—	—	—	—	—	—	—	—	—	—	—	—	—	—	—	2.00	2.00
Total	—	—	—	—	—	—	—	—	—	—	—	—	—	—	—	2.75	2.75
Daily, Winter (Max)	—	—	—	—	—	—	—	—	—	—	—	—	—	—	—	—	—
Medical Office Building	—	—	—	—	—	—	—	—	—	—	—	—	—	—	—	0.72	0.72

Pharmac w/o Drive Thru	—	—	—	—	—	—	—	—	—	—	—	—	—	—	—	0.03	0.03
Fast Food Restaurant with Drive Thru	—	—	—	—	—	—	—	—	—	—	—	—	—	—	—	2.00	2.00
Total	—	—	—	—	—	—	—	—	—	—	—	—	—	—	—	2.75	2.75
Annual	—	—	—	—	—	—	—	—	—	—	—	—	—	—	—	—	—
Medical Office Building	—	—	—	—	—	—	—	—	—	—	—	—	—	—	—	0.12	0.12
Pharmac y/Drugsto re w/o Drive Thru	—	—	—	—	—	—	—	—	—	—	—	—	—	—	—	0.01	0.01
Fast Food Restaurant with Drive Thru	—	—	—	—	—	—	—	—	—	—	—	—	—	—	—	0.33	0.33
Total	—	—	—	—	—	—	—	—	—	—	—	—	—	—	—	0.46	0.46

4.7. Offroad Emissions By Equipment Type

4.7.1. Unmitigated

Criteria Pollutants (lb/day for daily, ton/yr for annual) and GHGs (lb/day for daily, MT/yr for annual)

Equipment Type	ROG	NOx	CO	SO2	PM10E	PM10D	PM10T	PM2.5E	PM2.5D	PM2.5T	BCO2	NBCO2	CO2T	CH4	N2O	R	CO2e
Daily, Summer (Max)	—	—	—	—	—	—	—	—	—	—	—	—	—	—	—	—	—
Total	—	—	—	—	—	—	—	—	—	—	—	—	—	—	—	—	—

Daily, Winter (Max)	—	—	—	—	—	—	—	—	—	—	—	—	—	—	—	—	—
Total	—	—	—	—	—	—	—	—	—	—	—	—	—	—	—	—	—
Annual	—	—	—	—	—	—	—	—	—	—	—	—	—	—	—	—	—
Total	—	—	—	—	—	—	—	—	—	—	—	—	—	—	—	—	—

4.8. Stationary Emissions By Equipment Type

4.8.1. Unmitigated

Criteria Pollutants (lb/day for daily, ton/yr for annual) and GHGs (lb/day for daily, MT/yr for annual)

Equipment Type	ROG	NOx	CO	SO2	PM10E	PM10D	PM10T	PM2.5E	PM2.5D	PM2.5T	BCO2	NBCO2	CO2T	CH4	N2O	R	CO2e
Daily, Summer (Max)	—	—	—	—	—	—	—	—	—	—	—	—	—	—	—	—	—
Total	—	—	—	—	—	—	—	—	—	—	—	—	—	—	—	—	—
Daily, Winter (Max)	—	—	—	—	—	—	—	—	—	—	—	—	—	—	—	—	—
Total	—	—	—	—	—	—	—	—	—	—	—	—	—	—	—	—	—
Annual	—	—	—	—	—	—	—	—	—	—	—	—	—	—	—	—	—
Total	—	—	—	—	—	—	—	—	—	—	—	—	—	—	—	—	—

4.9. User Defined Emissions By Equipment Type

4.9.1. Unmitigated

Criteria Pollutants (lb/day for daily, ton/yr for annual) and GHGs (lb/day for daily, MT/yr for annual)

Equipment Type	ROG	NOx	CO	SO2	PM10E	PM10D	PM10T	PM2.5E	PM2.5D	PM2.5T	BCO2	NBCO2	CO2T	CH4	N2O	R	CO2e
Daily, Summer (Max)	—	—	—	—	—	—	—	—	—	—	—	—	—	—	—	—	—
Total	—	—	—	—	—	—	—	—	—	—	—	—	—	—	—	—	—
Daily, Winter (Max)	—	—	—	—	—	—	—	—	—	—	—	—	—	—	—	—	—
Total	—	—	—	—	—	—	—	—	—	—	—	—	—	—	—	—	—
Annual	—	—	—	—	—	—	—	—	—	—	—	—	—	—	—	—	—
Total	—	—	—	—	—	—	—	—	—	—	—	—	—	—	—	—	—

4.10. Soil Carbon Accumulation By Vegetation Type

4.10.1. Soil Carbon Accumulation By Vegetation Type - Unmitigated

Criteria Pollutants (lb/day for daily, ton/yr for annual) and GHGs (lb/day for daily, MT/yr for annual)

Vegetation	ROG	NOx	CO	SO2	PM10E	PM10D	PM10T	PM2.5E	PM2.5D	PM2.5T	BCO2	NBCO2	CO2T	CH4	N2O	R	CO2e
Daily, Summer (Max)	—	—	—	—	—	—	—	—	—	—	—	—	—	—	—	—	—
Total	—	—	—	—	—	—	—	—	—	—	—	—	—	—	—	—	—
Daily, Winter (Max)	—	—	—	—	—	—	—	—	—	—	—	—	—	—	—	—	—
Total	—	—	—	—	—	—	—	—	—	—	—	—	—	—	—	—	—
Annual	—	—	—	—	—	—	—	—	—	—	—	—	—	—	—	—	—
Total	—	—	—	—	—	—	—	—	—	—	—	—	—	—	—	—	—

4.10.2. Above and Belowground Carbon Accumulation by Land Use Type - Unmitigated

Criteria Pollutants (lb/day for daily, ton/yr for annual) and GHGs (lb/day for daily, MT/yr for annual)

Land Use	ROG	NOx	CO	SO2	PM10E	PM10D	PM10T	PM2.5E	PM2.5D	PM2.5T	BCO2	NBCO2	CO2T	CH4	N2O	R	CO2e
Daily, Summer (Max)	—	—	—	—	—	—	—	—	—	—	—	—	—	—	—	—	—
Total	—	—	—	—	—	—	—	—	—	—	—	—	—	—	—	—	—
Daily, Winter (Max)	—	—	—	—	—	—	—	—	—	—	—	—	—	—	—	—	—
Total	—	—	—	—	—	—	—	—	—	—	—	—	—	—	—	—	—
Annual	—	—	—	—	—	—	—	—	—	—	—	—	—	—	—	—	—
Total	—	—	—	—	—	—	—	—	—	—	—	—	—	—	—	—	—

4.10.3. Avoided and Sequestered Emissions by Species - Unmitigated

Criteria Pollutants (lb/day for daily, ton/yr for annual) and GHGs (lb/day for daily, MT/yr for annual)

Species	ROG	NOx	CO	SO2	PM10E	PM10D	PM10T	PM2.5E	PM2.5D	PM2.5T	BCO2	NBCO2	CO2T	CH4	N2O	R	CO2e
Daily, Summer (Max)	—	—	—	—	—	—	—	—	—	—	—	—	—	—	—	—	—
Avoided	—	—	—	—	—	—	—	—	—	—	—	—	—	—	—	—	—
Subtotal	—	—	—	—	—	—	—	—	—	—	—	—	—	—	—	—	—
Sequestered	—	—	—	—	—	—	—	—	—	—	—	—	—	—	—	—	—
Subtotal	—	—	—	—	—	—	—	—	—	—	—	—	—	—	—	—	—
Removed	—	—	—	—	—	—	—	—	—	—	—	—	—	—	—	—	—
Subtotal	—	—	—	—	—	—	—	—	—	—	—	—	—	—	—	—	—
—	—	—	—	—	—	—	—	—	—	—	—	—	—	—	—	—	—

Daily, Winter (Max)	—	—	—	—	—	—	—	—	—	—	—	—	—	—	—	—	—
Avoided	—	—	—	—	—	—	—	—	—	—	—	—	—	—	—	—	—
Subtotal	—	—	—	—	—	—	—	—	—	—	—	—	—	—	—	—	—
Sequestered	—	—	—	—	—	—	—	—	—	—	—	—	—	—	—	—	—
Subtotal	—	—	—	—	—	—	—	—	—	—	—	—	—	—	—	—	—
Removed	—	—	—	—	—	—	—	—	—	—	—	—	—	—	—	—	—
Subtotal	—	—	—	—	—	—	—	—	—	—	—	—	—	—	—	—	—
—	—	—	—	—	—	—	—	—	—	—	—	—	—	—	—	—	—
Annual	—	—	—	—	—	—	—	—	—	—	—	—	—	—	—	—	—
Avoided	—	—	—	—	—	—	—	—	—	—	—	—	—	—	—	—	—
Subtotal	—	—	—	—	—	—	—	—	—	—	—	—	—	—	—	—	—
Sequestered	—	—	—	—	—	—	—	—	—	—	—	—	—	—	—	—	—
Subtotal	—	—	—	—	—	—	—	—	—	—	—	—	—	—	—	—	—
Removed	—	—	—	—	—	—	—	—	—	—	—	—	—	—	—	—	—
Subtotal	—	—	—	—	—	—	—	—	—	—	—	—	—	—	—	—	—
—	—	—	—	—	—	—	—	—	—	—	—	—	—	—	—	—	—

5. Activity Data

5.1. Construction Schedule

Phase Name	Phase Type	Start Date	End Date	Days Per Week	Work Days per Phase	Phase Description
Site Preparation	Site Preparation	7/30/2024	8/6/2024	5.00	5.00	—
Grading	Grading	8/7/2024	8/18/2024	5.00	8.00	—
Building Construction	Building Construction	8/19/2024	7/7/2025	5.00	230	—

Paving	Paving	7/8/2025	8/2/2025	5.00	18.0	—
Architectural Coating	Architectural Coating	8/3/2025	8/28/2025	5.00	18.0	—

5.2. Off-Road Equipment

5.2.1. Unmitigated

Phase Name	Equipment Type	Fuel Type	Engine Tier	Number per Day	Hours Per Day	Horsepower	Load Factor
Site Preparation	Rubber Tired Dozers	Diesel	Average	3.00	8.00	367	0.40
Site Preparation	Tractors/Loaders/Backhoes	Diesel	Average	4.00	8.00	84.0	0.37
Grading	Excavators	Diesel	Average	1.00	8.00	36.0	0.38
Grading	Graders	Diesel	Average	1.00	8.00	148	0.41
Grading	Rubber Tired Dozers	Diesel	Average	1.00	8.00	367	0.40
Grading	Tractors/Loaders/Backhoes	Diesel	Average	3.00	8.00	84.0	0.37
Building Construction	Cranes	Diesel	Average	1.00	7.00	367	0.29
Building Construction	Forklifts	Diesel	Average	3.00	8.00	82.0	0.20
Building Construction	Generator Sets	Diesel	Average	1.00	8.00	14.0	0.74
Building Construction	Tractors/Loaders/Backhoes	Diesel	Average	3.00	7.00	84.0	0.37
Building Construction	Welders	Diesel	Average	1.00	8.00	46.0	0.45
Paving	Cement and Mortar Mixers	Diesel	Average	2.00	6.00	10.0	0.56
Paving	Pavers	Diesel	Average	1.00	8.00	81.0	0.42
Paving	Paving Equipment	Diesel	Average	2.00	6.00	89.0	0.36
Paving	Rollers	Diesel	Average	2.00	6.00	36.0	0.38
Paving	Tractors/Loaders/Backhoes	Diesel	Average	1.00	8.00	84.0	0.37
Architectural Coating	Air Compressors	Diesel	Average	1.00	6.00	37.0	0.48

5.3. Construction Vehicles

5.3.1. Unmitigated

Phase Name	Trip Type	One-Way Trips per Day	Miles per Trip	Vehicle Mix
Site Preparation	—	—	—	—
Site Preparation	Worker	17.5	18.5	LDA,LDT1,LDT2
Site Preparation	Vendor	—	10.2	HHDT,MHDT
Site Preparation	Hauling	0.00	20.0	HHDT
Site Preparation	Onsite truck	—	—	HHDT
Grading	—	—	—	—
Grading	Worker	15.0	18.5	LDA,LDT1,LDT2
Grading	Vendor	—	10.2	HHDT,MHDT
Grading	Hauling	22.5	20.0	HHDT
Grading	Onsite truck	—	—	HHDT
Building Construction	—	—	—	—
Building Construction	Worker	10.00	18.5	LDA,LDT1,LDT2
Building Construction	Vendor	5.05	10.2	HHDT,MHDT
Building Construction	Hauling	0.00	20.0	HHDT
Building Construction	Onsite truck	—	—	HHDT
Paving	—	—	—	—
Paving	Worker	20.0	18.5	LDA,LDT1,LDT2
Paving	Vendor	5.00	10.2	HHDT,MHDT
Paving	Hauling	0.00	20.0	HHDT
Paving	Onsite truck	—	—	HHDT
Architectural Coating	—	—	—	—
Architectural Coating	Worker	2.00	18.5	LDA,LDT1,LDT2
Architectural Coating	Vendor	—	10.2	HHDT,MHDT

Architectural Coating	Hauling	0.00	20.0	HHDT
Architectural Coating	Onsite truck	—	—	HHDT

5.4. Vehicles

5.4.1. Construction Vehicle Control Strategies

Non-applicable. No control strategies activated by user.

5.5. Architectural Coatings

Phase Name	Residential Interior Area Coated (sq ft)	Residential Exterior Area Coated (sq ft)	Non-Residential Interior Area Coated (sq ft)	Non-Residential Exterior Area Coated (sq ft)	Parking Area Coated (sq ft)
Architectural Coating	0.00	0.00	46,260	15,420	6,691

5.6. Dust Mitigation

5.6.1. Construction Earthmoving Activities

Phase Name	Material Imported (cy)	Material Exported (cy)	Acres Graded (acres)	Material Demolished (sq. ft.)	Acres Paved (acres)
Site Preparation	—	—	7.50	0.00	—
Grading	1,437	—	8.00	0.00	—
Paving	0.00	0.00	0.00	0.00	2.56

5.6.2. Construction Earthmoving Control Strategies

Control Strategies Applied	Frequency (per day)	PM10 Reduction	PM2.5 Reduction
Water Exposed Area	2	61%	61%

5.7. Construction Paving

Land Use	Area Paved (acres)	% Asphalt

Medical Office Building	0.00	0%
Pharmacy/Drugstore w/o Drive Thru	0.00	0%
Fast Food Restaurant with Drive Thru	0.00	0%
Parking Lot	2.56	100%

5.8. Construction Electricity Consumption and Emissions Factors

kWh per Year and Emission Factor (lb/MWh)

Year	kWh per Year	CO2	CH4	N2O
2024	0.00	532	0.03	< 0.005
2025	0.00	532	0.03	< 0.005

5.9. Operational Mobile Sources

5.9.1. Unmitigated

Land Use Type	Trips/Weekday	Trips/Saturday	Trips/Sunday	Trips/Year	VMT/Weekday	VMT/Saturday	VMT/Sunday	VMT/Year
Total all Land Uses	1,585	1,585	1,585	578,525	15,986	15,986	15,986	5,835,011

5.10. Operational Area Sources

5.10.1. Hearths

5.10.1.1. Unmitigated

5.10.2. Architectural Coatings

Residential Interior Area Coated (sq ft)	Residential Exterior Area Coated (sq ft)	Non-Residential Interior Area Coated (sq ft)	Non-Residential Exterior Area Coated (sq ft)	Parking Area Coated (sq ft)
0	0.00	46,260	15,420	6,691

5.10.3. Landscape Equipment

Season	Unit	Value
Snow Days	day/yr	0.00
Summer Days	day/yr	180

5.11. Operational Energy Consumption

5.11.1. Unmitigated

Electricity (kWh/yr) and CO2 and CH4 and N2O and Natural Gas (kBTU/yr)

Land Use	Electricity (kWh/yr)	CO2	CH4	N2O	Natural Gas (kBTU/yr)
Medical Office Building	493,906	532	0.0330	0.0040	776,580
Pharmacy/Drugstore w/o Drive Thru	12,258	532	0.0330	0.0040	7,428
Fast Food Restaurant with Drive Thru	44,850	532	0.0330	0.0040	146,152
Parking Lot	97,686	532	0.0330	0.0040	0.00

5.12. Operational Water and Wastewater Consumption

5.12.1. Unmitigated

Land Use	Indoor Water (gal/year)	Outdoor Water (gal/year)
Medical Office Building	3,551,225	0.00
Pharmacy/Drugstore w/o Drive Thru	88,764	0.00
Fast Food Restaurant with Drive Thru	388,220	0.00
Parking Lot	0.00	455,390

5.13. Operational Waste Generation

5.13.1. Unmitigated

Land Use	Waste (ton/year)	Cogeneration (kWh/year)
Medical Office Building	306	—
Pharmacy/Drugstore w/o Drive Thru	3.79	—
Fast Food Restaurant with Drive Thru	14.7	—
Parking Lot	0.00	—

5.14. Operational Refrigeration and Air Conditioning Equipment

5.14.1. Unmitigated

Land Use Type	Equipment Type	Refrigerant	GWP	Quantity (kg)	Operations Leak Rate	Service Leak Rate	Times Serviced
Medical Office Building	Household refrigerators and/or freezers	R-134a	1,430	0.45	0.60	0.00	1.00
Medical Office Building	Other commercial A/C and heat pumps	R-410A	2,088	< 0.005	4.00	4.00	18.0
Pharmacy/Drugstore w/o Drive Thru	Household refrigerators and/or freezers	R-134a	1,430	0.45	0.60	0.00	1.00
Pharmacy/Drugstore w/o Drive Thru	Other commercial A/C and heat pumps	R-410A	2,088	< 0.005	4.00	4.00	18.0
Fast Food Restaurant with Drive Thru	Household refrigerators and/or freezers	R-134a	1,430	0.00	0.60	0.00	1.00
Fast Food Restaurant with Drive Thru	Other commercial A/C and heat pumps	R-410A	2,088	1.80	4.00	4.00	18.0
Fast Food Restaurant with Drive Thru	Walk-in refrigerators and freezers	R-404A	3,922	< 0.005	7.50	7.50	20.0

5.15. Operational Off-Road Equipment

5.15.1. Unmitigated

Equipment Type	Fuel Type	Engine Tier	Number per Day	Hours Per Day	Horsepower	Load Factor

5.16. Stationary Sources

5.16.1. Emergency Generators and Fire Pumps

Equipment Type	Fuel Type	Number per Day	Hours per Day	Hours per Year	Horsepower	Load Factor

5.16.2. Process Boilers

Equipment Type	Fuel Type	Number	Boiler Rating (MMBtu/hr)	Daily Heat Input (MMBtu/day)	Annual Heat Input (MMBtu/yr)

5.17. User Defined

Equipment Type	Fuel Type

5.18. Vegetation

5.18.1. Land Use Change

5.18.1.1. Unmitigated

Vegetation Land Use Type	Vegetation Soil Type	Initial Acres	Final Acres

5.18.1. Biomass Cover Type

5.18.1.1. Unmitigated

Biomass Cover Type	Initial Acres	Final Acres

5.18.2. Sequestration

5.18.2.1. Unmitigated

Tree Type	Number	Electricity Saved (kWh/year)	Natural Gas Saved (btu/year)

6. Climate Risk Detailed Report

6.1. Climate Risk Summary

Cal-Adapt midcentury 2040–2059 average projections for four hazards are reported below for your project location. These are under Representation Concentration Pathway (RCP) 8.5 which assumes GHG emissions will continue to rise strongly through 2050 and then plateau around 2100.

Climate Hazard	Result for Project Location	Unit
Temperature and Extreme Heat	33.2	annual days of extreme heat
Extreme Precipitation	1.05	annual days with precipitation above 20 mm
Sea Level Rise	—	meters of inundation depth
Wildfire	0.00	annual hectares burned

Temperature and Extreme Heat data are for grid cell in which your project are located. The projection is based on the 98th historical percentile of daily maximum/minimum temperatures from observed historical data (32 climate model ensemble from Cal-Adapt, 2040–2059 average under RCP 8.5). Each grid cell is 6 kilometers (km) by 6 km, or 3.7 miles (mi) by 3.7 mi.
Extreme Precipitation data are for the grid cell in which your project are located. The threshold of 20 mm is equivalent to about ¾ an inch of rain, which would be light to moderate rainfall if received over a full day or heavy rain if received over a period of 2 to 4 hours. Each grid cell is 6 kilometers (km) by 6 km, or 3.7 miles (mi) by 3.7 mi.
Sea Level Rise data are for the grid cell in which your project are located. The projections are from Radke et al. (2017), as reported in Cal-Adapt (Radke et al., 2017, CEC-500-2017-008), and consider inundation location and depth for the San Francisco Bay, the Sacramento-San Joaquin River Delta and California coast resulting different increments of sea level rise coupled with extreme storm events. Users may select from four scenarios to view the range in potential inundation depth for the grid cell. The four scenarios are: No rise, 0.5 meter, 1.0 meter, 1.41 meters
Wildfire data are for the grid cell in which your project are located. The projections are from UC Davis, as reported in Cal-Adapt (2040–2059 average under RCP 8.5), and consider historical data of climate, vegetation, population density, and large (> 400 ha) fire history. Users may select from four model simulations to view the range in potential wildfire probabilities for the grid cell. The four simulations make different assumptions about expected rainfall and temperature are: Warmer/drier (HadGEM2-ES), Cooler/wetter (CNRM-CM5), Average conditions (CanESM2), Range of different rainfall and temperature possibilities (MIROC5). Each grid cell is 6 kilometers (km) by 6 km, or 3.7 miles (mi) by 3.7 mi.

6.2. Initial Climate Risk Scores

Climate Hazard	Exposure Score	Sensitivity Score	Adaptive Capacity Score	Vulnerability Score
Temperature and Extreme Heat	4	0	0	N/A
Extreme Precipitation	N/A	N/A	N/A	N/A
Sea Level Rise	N/A	N/A	N/A	N/A
Wildfire	N/A	N/A	N/A	N/A

Flooding	N/A	N/A	N/A	N/A
Drought	0	0	0	N/A
Snowpack Reduction	N/A	N/A	N/A	N/A
Air Quality Degradation	N/A	N/A	N/A	N/A

The sensitivity score reflects the extent to which a project would be adversely affected by exposure to a climate hazard. Exposure is rated on a scale of 1 to 5, with a score of 5 representing the greatest exposure.
The adaptive capacity of a project refers to its ability to manage and reduce vulnerabilities from projected climate hazards. Adaptive capacity is rated on a scale of 1 to 5, with a score of 5 representing the greatest ability to adapt.
The overall vulnerability scores are calculated based on the potential impacts and adaptive capacity assessments for each hazard. Scores do not include implementation of climate risk reduction measures.

6.3. Adjusted Climate Risk Scores

Climate Hazard	Exposure Score	Sensitivity Score	Adaptive Capacity Score	Vulnerability Score
Temperature and Extreme Heat	4	1	1	4
Extreme Precipitation	N/A	N/A	N/A	N/A
Sea Level Rise	N/A	N/A	N/A	N/A
Wildfire	N/A	N/A	N/A	N/A
Flooding	N/A	N/A	N/A	N/A
Drought	1	1	1	2
Snowpack Reduction	N/A	N/A	N/A	N/A
Air Quality Degradation	N/A	N/A	N/A	N/A

The sensitivity score reflects the extent to which a project would be adversely affected by exposure to a climate hazard. Exposure is rated on a scale of 1 to 5, with a score of 5 representing the greatest exposure.
The adaptive capacity of a project refers to its ability to manage and reduce vulnerabilities from projected climate hazards. Adaptive capacity is rated on a scale of 1 to 5, with a score of 5 representing the greatest ability to adapt.
The overall vulnerability scores are calculated based on the potential impacts and adaptive capacity assessments for each hazard. Scores include implementation of climate risk reduction measures.

6.4. Climate Risk Reduction Measures

7. Health and Equity Details

7.1. CalEnviroScreen 4.0 Scores

The maximum CalEnviroScreen score is 100. A high score (i.e., greater than 50) reflects a higher pollution burden compared to other census tracts in the state.

Indicator	Result for Project Census Tract
Exposure Indicators	—
AQ-Ozone	84.6
AQ-PM	9.66
AQ-DPM	6.31
Drinking Water	30.2
Lead Risk Housing	30.1
Pesticides	0.00
Toxic Releases	17.9
Traffic	18.1
Effect Indicators	—
CleanUp Sites	68.9
Groundwater	45.2
Haz Waste Facilities/Generators	19.2
Impaired Water Bodies	51.2
Solid Waste	75.7
Sensitive Population	—
Asthma	84.9
Cardio-vascular	87.4
Low Birth Weights	50.5
Socioeconomic Factor Indicators	—
Education	64.5
Housing	47.1
Linguistic	34.6
Poverty	67.0

Unemployment	95.5

7.2. Healthy Places Index Scores

The maximum Health Places Index score is 100. A high score (i.e., greater than 50) reflects healthier community conditions compared to other census tracts in the state.

Indicator	Result for Project Census Tract
Economic	—
Above Poverty	32.02874374
Employed	23.52110869
Median HI	53.11176697
Education	—
Bachelor's or higher	21.19851148
High school enrollment	13.5249583
Preschool enrollment	35.44206339
Transportation	—
Auto Access	78.96830489
Active commuting	9.470037213
Social	—
2-parent households	61.99153086
Voting	36.04516874
Neighborhood	—
Alcohol availability	89.14410368
Park access	25.3560888
Retail density	9.354548954
Supermarket access	4.978827153
Tree canopy	0.61593738
Housing	—
Homeownership	71.07660721

Housing habitability	66.22610035
Low-inc homeowner severe housing cost burden	74.99037598
Low-inc renter severe housing cost burden	40.13858591
Uncrowded housing	41.35762864
Health Outcomes	—
Insured adults	34.04337226
Arthritis	60.6
Asthma ER Admissions	15.2
High Blood Pressure	69.1
Cancer (excluding skin)	74.5
Asthma	18.0
Coronary Heart Disease	74.7
Chronic Obstructive Pulmonary Disease	42.5
Diagnosed Diabetes	48.6
Life Expectancy at Birth	15.7
Cognitively Disabled	21.0
Physically Disabled	50.9
Heart Attack ER Admissions	6.3
Mental Health Not Good	26.2
Chronic Kidney Disease	73.0
Obesity	25.8
Pedestrian Injuries	41.3
Physical Health Not Good	37.1
Stroke	51.7
Health Risk Behaviors	—
Binge Drinking	33.9
Current Smoker	23.0

No Leisure Time for Physical Activity	40.8
Climate Change Exposures	—
Wildfire Risk	0.0
SLR Inundation Area	0.0
Children	22.0
Elderly	91.2
English Speaking	81.5
Foreign-born	37.1
Outdoor Workers	19.9
Climate Change Adaptive Capacity	—
Impervious Surface Cover	77.3
Traffic Density	30.2
Traffic Access	23.0
Other Indices	—
Hardship	67.4
Other Decision Support	—
2016 Voting	35.6

7.3. Overall Health & Equity Scores

Metric	Result for Project Census Tract
CalEnviroScreen 4.0 Score for Project Location (a)	57.0
Healthy Places Index Score for Project Location (b)	33.0
Project Located in a Designated Disadvantaged Community (Senate Bill 535)	No
Project Located in a Low-Income Community (Assembly Bill 1550)	No
Project Located in a Community Air Protection Program Community (Assembly Bill 617)	No

a: The maximum CalEnviroScreen score is 100. A high score (i.e., greater than 50) reflects a higher pollution burden compared to other census tracts in the state.
b: The maximum Health Places Index score is 100. A high score (i.e., greater than 50) reflects healthier community conditions compared to other census tracts in the state.

7.4. Health & Equity Measures

No Health & Equity Measures selected.

7.5. Evaluation Scorecard

Health & Equity Evaluation Scorecard not completed.

7.6. Health & Equity Custom Measures

No Health & Equity Custom Measures created.

8. User Changes to Default Data

Screen	Justification
Land Use	Per site plan
Construction: Construction Phases	No demolition required

Appendix B:

City of Victorville Greenhouse Gas Emissions Screening Tables

City of Victorville Screening Table for Implementation of GHG Reduction Measures for Commercial Development

Feature	Description	Assigned Point Values	Project Points
Building Envelope			
Insultation	2019 baseline (walls R-16; roof/attic R-32)	0	11
	Modestly Enhanced Insulation (walls R-15, roof/attic R-38))	9	
	Enhanced Insulation (rigid wall insulation R-13, roof/attic R-38)	11	
	Greatly Enhanced Insulation (spray foam insulated walls R-18 or higher, roof/attic R-38 or higher)	12	
Windows	2019 Baseline Windows (0.3 U-factor, 0.23 solar heat gain coefficient [SHGC)	0	4
	Enhanced Window Insulation (0.28 U-factor, 0.22 SHGC)	4	
	Greatly Enhanced Window Insulation (0.28 or less U-factor, 0.22 or less SHGC)	5	
Cool Roof	2019 Standard (none)	0	7
	Enhanced Cool Roof (CRRC Rated 0.2 aged solar reflectance, 0.75 thermal emittance)	7	
	Greatly Enhanced Cool Roof (CRRC Rated 0.35 aged solar reflectance, 0.75 thermal emittance)	8	
Air Filtration	Air barrier applied to exterior walls, calking, and visual inspection such as the HERS Verified Quality Insulation Installation (QII or equivalent)	7	TBD
	Blower Door HERS Verified Envelope Leakage or equivalent	6	
Thermal Storage of Building	Modest Thermal Mass (10% of floor or 10% of walls 12" or more thick exposed concrete or masonry with no permanently installed floor covering such as carpet, linoleum, wood or other insulating materials)	2	No
	Enhanced Thermal Mass (20% of floor or 20% of walls 12" or more thick exposed concrete or masonry with no permanently installed floor covering such as carpet, linoleum, wood or other insulating materials)	14	
Indoor Space Efficiencies			
Heating/Cooling Distribution System	Minimum Duct Insulation (R-6 required)	0	5
	Enhanced Duct Insulation (R-8)	5	
	Distribution loss reduction with inspection (HERS Verified Duct Leakage or equivalent	6	
Space Heating/Cooling Equipment	2019 Minimum HVAC Efficiency (EER 13/75% AFUE or 7.7 HSPF)	0	5
	Improved Efficiency HVAC (EER 14/78% AFUE or 8 HSPF)	4	
	High Efficiency HVAC (EER 15/80% AFUE or 8.5 HSPF)	5	
	Very High Efficiency HVAC (EER 16/82% AFUE or 9 HSPF)	7	
Water Heaters	2019 Minimum Efficiency (0.57 Energy Factor)	0	10
	Improved Efficiency Water Heater (0.675 Energy Factor)	8	
	High Efficiency Water Heater (0.72 Energy Factor)	10	
	Very High Efficiency Water Heater (0.92 Energy Factor)	11	
	Solar Pre-heat System (0.2 Net Solar Fraction)	2	No
	Enhanced Solar Pre-heat System (0.35 Net Solar Fraction)	5	
Daylighting	All peripheral rooms within building have at least one window or skylight	0	1
	All rooms within building have daylight (through use of windows, solar tubes, skylights, etc.)	1	
	All rooms daylighted	1	
Artificial Lighting	2019 Minimum (required)	0	5
	Efficient Lights (25% of in-unit fixtures considered high efficacy. High efficacy is defined as 40 lumens/watt for 15 watt or less fixtures; 50 lumens/watt for 15-40 watt fixtures, 60 lumens/watt for fixtures >40watt)	5	
	High Efficiency Lights (50% of in-unit fixtures are high efficacy)	7	
	Very High Efficiency Lights (100% of in-unit fixtures are high efficacy)	8	
Appliances	Star Commercial Refrigerator (new)	2	2
	Energy Star Commercial Dish Washer (new)	2	2
	Energy Star Commercial Cloths Washing	2	
Miscellaneous Commercial/Industrial Building Efficiencies			
Building Placement	North/South alignment of building or other building placement such that the orientation of the buildings optimizes conditions for natural heating, cooling, and lighting.	4	No
Shading	At least 90% of south-facing glazing will be shaded by vegetation or overhangs at noon on Jun 21st.	6	6
Renewable Energy			
Photovoltaic	30 percent of the power needs of the project	8	TBD
	40 percent of the power needs of the project	12	
	50 percent of the power needs of the project	16	
	60 percent of the power needs of the project	19	
	70 percent of the power needs of the project	23	
	80 percent of the power needs of the project	26	
	90 percent of the power needs of the project	30	
	100 percent of the power needs of the project	34	
Wind Turbines	30 percent of the power needs of the project	8	No
	40 percent of the power needs of the project	12	
	50 percent of the power needs of the project	16	
	60 percent of the power needs of the project	19	
	70 percent of the power needs of the project	23	
	80 percent of the power needs of the project	26	
	90 percent of the power needs of the project	30	
	100 percent of the power needs of the project	34	

Irrigation and Landscaping			
Water Efficient Landscaping	Eliminate conventional turf from landscaping	0	3
	Only moderate water using plants	2	
	Only low water using plants	3	
	Only California Native landscape that requires no or only supplemental irrigation	5	
Water Efficient Irrigation Systems	Low precipitation spray heads< .75"/hr or drip irrigation	1	3
	Weather based irrigation control systems combined with drip irrigation (demonstrate 20 reduced water use)	3	
Recycled Water	Recycled water connection (purple pipe) to irrigation system on site	5	TBD
Trees	Increase tree planting in parking areas 50% beyond City Code requirements	TBD	The Project will increase tree planting in parking areas 50% beyond City Code requirements
Storm water Reuse Systems	Innovative on-site stormwater collection, filtration and reuse systems are being developed that provide supplemental irrigation water and provide vector control. These systems can greatly reduce the irrigation needs of a project. Point values for these types of systems will be determined based upon design and engineering data documenting the water savings.	TBD	See system documentation following tables
Potable Water			
Showers	Water Efficient Showerheads (2.0 gpm)	2	None
Toilets	Water Efficient Toilets/Urinals (1.5gpm)	3	3
	Waterless Urinals (note that commercial buildings having both waterless urinals and high efficiency toilets will have a combined point value of 6 points)	3	
Faucets	Water Efficient faucets (1.28gpm)	2	2
Commercial Dishwashers	Water Efficient dishwashers (20% water savings)	2	2
Commercial Laundry Washers	EPA Water Efficient laundry (15% water savings)	2	None
	EPA High Efficiency laundry Equipment that captures and reuses rinse water (30% water savings)	4	
Employment Based Trip and VMT Reduction Policy			
Local Retail Near Residential (Commercial only Projects)	Preferential parking	1	TBD
	Synchronize signals	1	
	Connect signals to existing ITS	3	
Bicycle Infrastructure	Provide bicycle paths within project boundaries.	1	TBD
	Provide bicycle path linkages between residential and other land uses.	2	
	Provide bicycle path linkages between residential and transit.	3	
Electric Vehicle Infrastructure			
Cars	Level 2 240 volt AC Fast Chargers	5	5
	Level 3 480 volt DC Rapid Chargers	8	
Trucks	Level 1 AC Chargers for EV Medium Duty Truck	3	
	Level 1 AC Chargers for EV Class 8 (Heavy Duty) Truck	5	
	Level 2 AC Chargers for EV Medium Duty Truck	8	
	Level 2 AC Chargers for EV Class 8 (Heavy Duty) Truck	12	
	Level 3 DC Chargers for EV Class 8 (Heavy Duty) Truck	16	
Total Points			**76**

Source: Greenhouse Gas Emissions Screening Table Review, City of Victorville Department of Development.

Advanced Drainage Systems, Inc.

SiteASSIST™
FOR STORMTECH INSTRUCTIONS, DOWNLOAD THE INSTALLATION APP

MC-7200 STORMTECH CHAMBER SPECIFICATIONS

1. CHAMBERS SHALL BE STORMTECH MC-7200.
2. CHAMBERS SHALL BE ARCH-SHAPED AND SHALL BE MANUFACTURED FROM VIRGIN, IMPACT-MODIFIED POLYPROPYLENE COPOLYMERS.
3. CHAMBERS SHALL MEET THE REQUIREMENTS OF ASTM F2418-16a, "STANDARD SPECIFICATION FOR POLYPROPYLENE (PP) CORRUGATED WALL STORMWATER COLLECTION CHAMBERS" CHAMBER CLASSIFICATION 60x101.
4. CHAMBER ROWS SHALL PROVIDE CONTINUOUS, UNOBSTRUCTED INTERNAL SPACE WITH NO INTERNAL SUPPORTS THAT WOULD IMPEDE FLOW OR LIMIT ACCESS FOR INSPECTION.
5. THE STRUCTURAL DESIGN OF THE CHAMBERS, THE STRUCTURAL BACKFILL, AND THE INSTALLATION REQUIREMENTS SHALL ENSURE THAT THE LOAD FACTORS SPECIFIED IN THE AASHTO LRFD BRIDGE DESIGN SPECIFICATIONS, SECTION 12.12, ARE MET FOR: 1) LONG-DURATION DEAD LOADS AND 2) SHORT-DURATION LIVE LOADS, BASED ON THE AASHTO DESIGN TRUCK WITH CONSIDERATION FOR IMPACT AND MULTIPLE VEHICLE PRESENCES.
6. CHAMBERS SHALL BE DESIGNED, TESTED AND ALLOWABLE LOAD CONFIGURATIONS DETERMINED IN ACCORDANCE WITH ASTM F2787, "STANDARD PRACTICE FOR STRUCTURAL DESIGN OF THERMOPLASTIC CORRUGATED WALL STORMWATER COLLECTION CHAMBERS". LOAD CONFIGURATIONS SHALL INCLUDE: 1) INSTANTANEOUS (<1 MIN) AASHTO DESIGN TRUCK LIVE LOAD ON MINIMUM COVER 2) MAXIMUM PERMANENT (75-YR) COVER LOAD AND 3) ALLOWABLE COVER WITH PARKED (1-WEEK) AASHTO DESIGN TRUCK.
7. REQUIREMENTS FOR HANDLING AND INSTALLATION:
   - TO MAINTAIN THE WIDTH OF CHAMBERS DURING SHIPPING AND HANDLING, CHAMBERS SHALL HAVE INTEGRAL, INTERLOCKING STACKING LUGS.
   - TO ENSURE A SECURE JOINT DURING INSTALLATION AND BACKFILL, THE HEIGHT OF THE CHAMBER JOINT SHALL NOT BE LESS THAN 3".
   - TO ENSURE THE INTEGRITY OF THE ARCH SHAPE DURING INSTALLATION, a) THE ARCH STIFFNESS CONSTANT SHALL BE GREATER THAN OR EQUAL TO 450 LBS/IN/IN. THE ASC IS DEFINED IN SECTION 6.2.8 OF ASTM F2418 AND b) TO RESIST CHAMBER DEFORMATION DURING INSTALLATION AT ELEVATED TEMPERATURES (ABOVE 73° F / 23° C), CHAMBERS SHALL BE PRODUCED FROM REFLECTIVE GOLD OR YELLOW COLORS.
8. ONLY CHAMBERS THAT ARE APPROVED BY THE SITE DESIGN ENGINEER WILL BE ALLOWED. UPON REQUEST BY THE SITE DESIGN ENGINEER OR OWNER, THE CHAMBER MANUFACTURER SHALL SUBMIT A STRUCTURAL EVALUATION FOR APPROVAL BEFORE DELIVERING CHAMBERS TO THE PROJECT SITE AS FOLLOWS:
   - THE STRUCTURAL EVALUATION SHALL BE SEALED BY A REGISTERED PROFESSIONAL ENGINEER.
   - THE STRUCTURAL EVALUATION SHALL DEMONSTRATE THAT THE SAFETY FACTORS ARE GREATER THAN OR EQUAL TO 1.95 FOR DEAD LOAD AND 1.75 FOR LIVE LOAD, THE MINIMUM REQUIRED BY ASTM F2787 AND BY SECTIONS 3 AND 12.12 OF THE AASHTO LRFD BRIDGE DESIGN SPECIFICATIONS FOR THERMOPLASTIC PIPE.
   - THE TEST DERIVED CREEP MODULUS AS SPECIFIED IN ASTM F2418 SHALL BE USED FOR PERMANENT DEAD LOAD DESIGN EXCEPT THAT IT SHALL BE THE 75-YEAR MODULUS USED FOR DESIGN.
9. CHAMBERS AND END CAPS SHALL BE PRODUCED AT AN ISO 9001 CERTIFIED MANUFACTURING FACILITY.

IMPORTANT - NOTES FOR THE BIDDING AND INSTALLATION OF MC-7200 CHAMBER SYSTEM

1. STORMTECH MC-7200 CHAMBERS SHALL NOT BE INSTALLED UNTIL THE MANUFACTURER'S REPRESENTATIVE HAS COMPLETED A PRE-CONSTRUCTION MEETING WITH THE INSTALLERS.
2. STORMTECH MC-7200 CHAMBERS SHALL BE INSTALLED IN ACCORDANCE WITH THE "STORMTECH MC-7200 CONSTRUCTION GUIDE".
3. CHAMBERS ARE NOT TO BE BACKFILLED WITH A DOZER OR EXCAVATOR SITUATED OVER THE CHAMBERS. STORMTECH RECOMMENDS 3 BACKFILL METHODS:
   - STONESHOOTER LOCATED OFF THE CHAMBER BED.
   - BACKFILL AS ROWS ARE BUILT USING AN EXCAVATOR ON THE FOUNDATION STONE OR SUBGRADE.
   - BACKFILL FROM OUTSIDE THE EXCAVATION USING A LONG BOOM HOE OR EXCAVATOR.
4. THE FOUNDATION STONE SHALL BE LEVELED AND COMPACTED PRIOR TO PLACING CHAMBERS.
5. JOINTS BETWEEN CHAMBERS SHALL BE PROPERLY SEATED PRIOR TO PLACING STONE.
6. MAINTAIN MINIMUM - 9" (230 mm) SPACING BETWEEN THE CHAMBER ROWS.
7. INLET AND OUTLET MANIFOLDS MUST BE INSERTED A MINIMUM OF 12" (300 mm) INTO CHAMBER END CAPS.
8. EMBEDMENT STONE SURROUNDING CHAMBERS MUST BE A CLEAN, CRUSHED, ANGULAR STONE MEETING THE AASHTO M43 DESIGNATION OF #3 OR #4.
9. STONE SHALL BE BROUGHT UP EVENLY AROUND CHAMBERS SO AS NOT TO DISTORT THE CHAMBER SHAPE. STONE DEPTHS SHOULD NEVER DIFFER BY MORE THAN 12" (300 mm) BETWEEN ADJACENT CHAMBER ROWS.
10. STONE MUST BE PLACED ON THE TOP CENTER OF THE CHAMBER TO ANCHOR THE CHAMBERS IN PLACE AND PRESERVE ROW SPACING.
11. THE CONTRACTOR MUST REPORT ANY DISCREPANCIES WITH CHAMBER FOUNDATION MATERIAL BEARING CAPACITIES TO THE SITE DESIGN ENGINEER.
12. ADS RECOMMENDS THE USE OF "FLEXSTORM CATCH IT" INSERTS DURING CONSTRUCTION FOR ALL INLETS TO PROTECT THE SUBSURFACE STORMWATER MANAGEMENT SYSTEM FROM CONSTRUCTION SITE RUNOFF.

NOTES FOR CONSTRUCTION EQUIPMENT

1. STORMTECH MC-7200 CHAMBERS SHALL BE INSTALLED IN ACCORDANCE WITH THE "STORMTECH MC-7200 CONSTRUCTION GUIDE".
2. THE USE OF EQUIPMENT OVER MC-7200 CHAMBERS IS LIMITED:
   - NO EQUIPMENT IS ALLOWED ON BARE CHAMBERS.
   - NO RUBBER TIRED LOADER, DUMP TRUCK, OR EXCAVATORS ARE ALLOWED UNTIL PROPER FILL DEPTHS ARE REACHED IN ACCORDANCE WITH THE "STORMTECH MC-7200 CONSTRUCTION GUIDE".
   - WEIGHT LIMITS FOR CONSTRUCTION EQUIPMENT CAN BE FOUND IN THE "STORMTECH MC-7200 CONSTRUCTION GUIDE".
3. FULL 36" (900 mm) OF STABILIZED COVER MATERIALS OVER THE CHAMBERS IS REQUIRED FOR DUMP TRUCK TRAVEL OR DUMPING.

USE OF A DOZER TO PUSH EMBEDMENT STONE BETWEEN THE ROWS OF CHAMBERS MAY CAUSE DAMAGE TO CHAMBERS AND IS NOT AN ACCEPTABLE BACKFILL METHOD. ANY CHAMBERS DAMAGED BY USING THE "DUMP AND PUSH" METHOD ARE NOT COVERED UNDER THE STORMTECH STANDARD WARRANTY.

CONTACT STORMTECH AT 1-888-892-2694 WITH ANY QUESTIONS ON INSTALLATION REQUIREMENTS OR WEIGHT LIMITS FOR CONSTRUCTION EQUIPMENT.

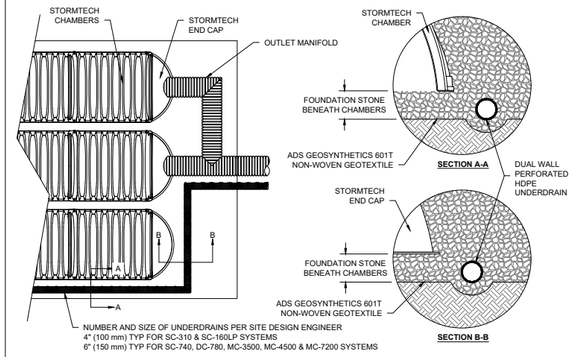

5 UNDERDRAIN DETAIL

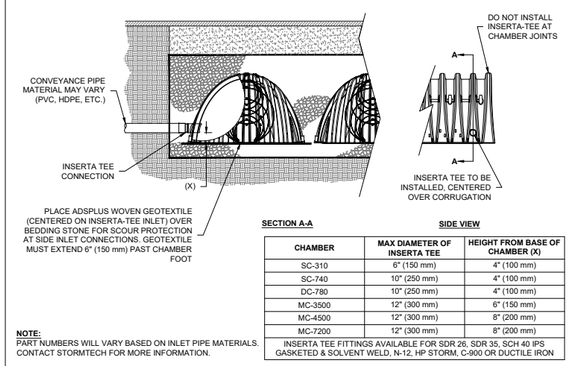

SECTION A-A

CHAMBER	MAX DIAMETER OF INSERTA TEE	HEIGHT FROM BASE OF CHAMBER (X)
SC-310	6" (150 mm)	4" (100 mm)
SC-740	10" (250 mm)	4" (100 mm)
DC-780	10" (250 mm)	4" (100 mm)
MC-3500	12" (300 mm)	6" (150 mm)
MC-4500	12" (300 mm)	8" (200 mm)
MC-7200	12" (300 mm)	8" (200 mm)
INSERTA TEE FITTINGS AVAILABLE FOR SDR 26, SDR 35, SCH 40 IPS GASKETED & SOLVENT WELD, N-12, HP STORM, C-900 OR DUCTILE IRON		

NOTE:
PART NUMBERS WILL VARY BASED ON INLET PIPE MATERIALS. CONTACT STORMTECH FOR MORE INFORMATION.

6 INSERTA-TEE SIDE INLET DETAIL

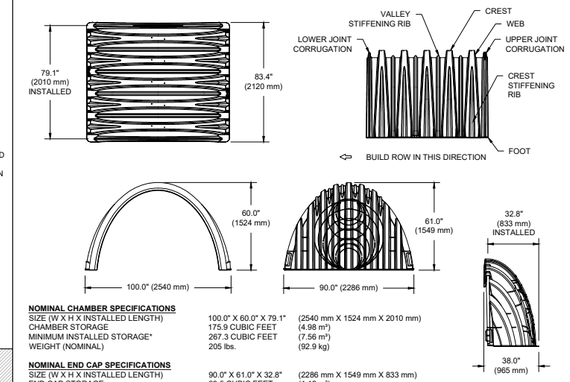

NOMINAL CHAMBER SPECIFICATIONS

SIZE (W X H X INSTALLED LENGTH)	100.0" X 60.0" X 79.1"	(2540 mm X 1524 mm X 2010 mm)
CHAMBER STORAGE	175.9 CUBIC FEET	(4.98 m^3)
MINIMUM INSTALLED STORAGE*	267.3 CUBIC FEET	(7.56 m^3)
WEIGHT (NOMINAL)	205 lbs.	(92.9 kg)

NOMINAL END CAP SPECIFICATIONS

SIZE (W X H X INSTALLED LENGTH)	90.0" X 61.0" X 32.8"	(2286 mm X 1549 mm X 833 mm)
END CAP STORAGE	39.5 CUBIC FEET	(1.12 m^3)
MINIMUM INSTALLED STORAGE*	115.3 CUBIC FEET	(3.26 m^3)
WEIGHT (NOMINAL)	90 lbs.	(40.8 kg)

*ASSUMES 12" (305 mm) STONE ABOVE, 9" (229 mm) STONE FOUNDATION AND BETWEEN CHAMBERS, 12" (305 mm) STONE PERIMETER IN FRONT OF END CAPS AND 40% STONE POROSITY.

PARTIAL CUT HOLES AT BOTTOM OF END CAP FOR PART NUMBERS ENDING WITH "B"
PARTIAL CUT HOLES AT TOP OF END CAP FOR PART NUMBERS ENDING WITH "T"
END CAPS WITH A PREFABRICATED WELDED STUB END WITH "W"

PART #	STUB	B	C
MC7200IEPP06T	6" (150 mm)	42.54" (1081 mm)	---
MC7200IEPP06B		---	0.86" (22 mm)
MC7200IEPP08T	8" (200 mm)	40.50" (1029 mm)	---
MC7200IEPP08B		---	1.01" (26 mm)
MC7200IEPP10T	10" (250 mm)	38.37" (975 mm)	---
MC7200IEPP10B			1.33" (34 mm)
MC7200IEPP12T	12" (300 mm)	35.69" (907 mm)	---
MC7200IEPP12B		---	1.55" (39 mm)
MC7200IEPP15T	15" (375 mm)	32.72" (831 mm)	---
MC7200IEPP15B		---	1.70" (43 mm)
MC7200IEPP18T	18" (450 mm)	29.36" (746 mm)	---
MC7200IEPP18W			
MC7200IEPP18B		---	1.97" (50 mm)
MC7200IEPP18BW			
MC7200IEPP24T	24" (600 mm)	23.05" (585 mm)	---
MC7200IEPP24TW			
MC7200IEPP24B		---	2.26" (57 mm)
MC7200IEPP24BW			
MC7200IEPP30BW	30" (750 mm)	---	2.95" (75 mm)
MC7200IEPP36BW	36" (900 mm)	---	3.25" (83 mm)
MC7200IEPP42BW	42" (1050 mm)	---	3.55" (90 mm)

NOTE: ALL DIMENSIONS ARE NOMINAL

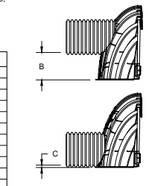

CUSTOM PREFABRICATED INVERTS ARE AVAILABLE UPON REQUEST. INVENTORIED MANIFOLDS INCLUDE 12-24" (300-600 mm) SIZE ON SIZE AND 15-48" (375-1200 mm) ECCENTRIC MANIFOLDS. CUSTOM INVERT LOCATIONS ON THE MC-7200 END CAP CUT IN THE FIELD ARE NOT RECOMMENDED FOR PIPE SIZES GREATER THAN 10" (250 mm). THE INVERT LOCATION IN COLUMN 'B' ARE THE HIGHEST POSSIBLE FOR THE PIPE SIZE.

2 MC-7200 TECHNICAL SPECIFICATIONS

INSPECTION & MAINTENANCE

STEP 1) INSPECT ISOLATOR ROW PLUS FOR SEDIMENT
- A. INSPECTION PORTS (IF PRESENT)
  - A.1. REMOVE/OPEN LID ON NYLOPLAST INLINE DRAIN
  - A.2. REMOVE AND CLEAN FLEXSTORM FILTER IF INSTALLED
  - A.3. USING A FLASHLIGHT AND STADIA ROD, MEASURE DEPTH OF SEDIMENT AND RECORD ON MAINTENANCE LOG
  - A.4. LOWER A CAMERA INTO ISOLATOR ROW PLUS FOR VISUAL INSPECTION OF SEDIMENT LEVELS (OPTIONAL)
  - A.5. IF SEDIMENT IS AT, OR ABOVE, 3" (80 mm) PROCEED TO STEP 2. IF NOT, PROCEED TO STEP 3.
- B. ALL ISOLATOR PLUS ROWS
  - B.1. REMOVE COVER FROM STRUCTURE AT UPSTREAM END OF ISOLATOR ROW PLUS
  - B.2. USING A FLASHLIGHT, INSPECT DOWN THE ISOLATOR ROW PLUS THROUGH OUTLET PIPE
    - i) MIRRORS ON POLES OR CAMERAS MAY BE USED TO AVOID A CONFINED SPACE ENTRY
    - ii) FOLLOW OSHA REGULATIONS FOR CONFINED SPACE ENTRY IF ENTERING MANHOLE
  - B.3. IF SEDIMENT IS AT, OR ABOVE, 3" (80 mm) PROCEED TO STEP 2. IF NOT, PROCEED TO STEP 3.

STEP 2) CLEAN OUT ISOLATOR ROW PLUS USING THE JETVAC PROCESS
- A. A FIXED CULVERT CLEANING NOZZLE WITH REAR FACING SPREAD OF 45" (1.1 m) OR MORE IS PREFERRED
- B. APPLY MULTIPLE PASSES OF JETVAC UNTIL BACKFLUSH WATER IS CLEAN
- C. VACUUM STRUCTURE SUMP AS REQUIRED

STEP 3) REPLACE ALL COVERS, GRATES, FILTERS, AND LIDS; RECORD OBSERVATIONS AND ACTIONS.

STEP 4) INSPECT AND CLEAN BASINS AND MANHOLES UPSTREAM OF THE STORMTECH SYSTEM.

NOTES

1. INSPECT EVERY 6 MONTHS DURING THE FIRST YEAR OF OPERATION. ADJUST THE INSPECTION INTERVAL BASED ON PREVIOUS OBSERVATIONS OF SEDIMENT ACCUMULATION AND HIGH WATER ELEVATIONS.
2. CONDUCT JETTING AND VACTORING ANNUALLY OR WHEN INSPECTION SHOWS THAT MAINTENANCE IS NECESSARY.

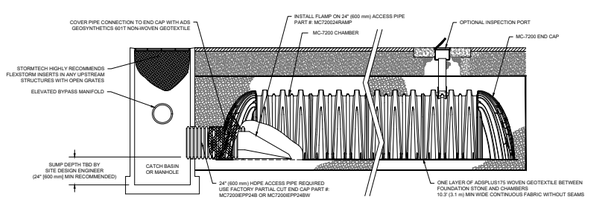

3 MC-7200 ISOLATOR ROW PLUS DETAIL

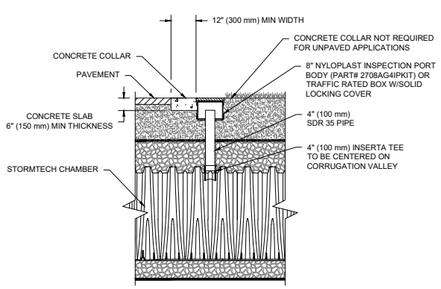

NOTE:
INSPECTION PORTS MAY BE CONNECTED THROUGH ANY CHAMBER CORRUGATION VALLEY.

4 4" PVC INSPECTION PORT DETAIL (MC SERIES CHAMBER)

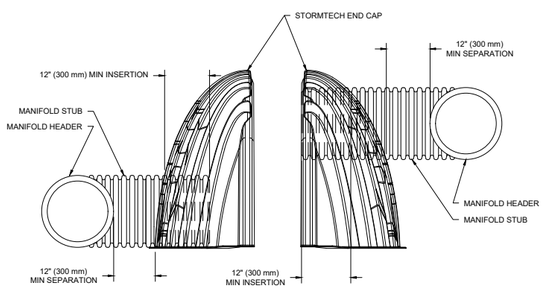

NOTE: MANIFOLD STUB MUST BE LAID HORIZONTAL FOR A PROPER FIT IN END CAP OPENING.

7 MC-SERIES END CAP INSERTION DETAIL

ACCEPTABLE FILL MATERIALS: STORMTECH MC-7200 CHAMBER SYSTEMS

MATERIAL LOCATION		DESCRIPTION	AASHTO MATERIAL CLASSIFICATIONS	COMPACTION / DENSITY REQUIREMENT
D	**FINAL FILL:** FILL MATERIAL FOR LAYER 'D' STARTS FROM THE TOP OF THE 'C' LAYER TO THE BOTTOM OF FLEXIBLE PAVEMENT OR UNPAVED FINISHED GRADE ABOVE. NOTE THAT PAVEMENT SUBBASE MAY BE PART OF THE 'D' LAYER	ANY SOIL/ROCK MATERIALS, NATIVE SOILS, OR PER ENGINEER'S PLANS. CHECK PLANS FOR PAVEMENT SUBGRADE REQUIREMENTS.	N/A	PREPARE PER SITE DESIGN ENGINEER'S PLANS. PAVED INSTALLATIONS MAY HAVE STRINGENT MATERIAL AND PREPARATION REQUIREMENTS.
C	**INITIAL FILL:** FILL MATERIAL FOR LAYER 'C' STARTS FROM THE TOP OF THE EMBEDMENT STONE ('B' LAYER) TO 24" (600 mm) ABOVE THE TOP OF THE CHAMBER. NOTE THAT PAVEMENT SUBBASE MAY BE A PART OF THE 'C' LAYER.	GRANULAR WELL-GRADED SOIL/AGGREGATE MIXTURES, <35% FINES OR PROCESSED AGGREGATE. MOST PAVEMENT SUBBASE MATERIALS CAN BE USED IN LIEU OF THIS LAYER.	AASHTO M145[1] A-1, A-2-4, A-3 OR AASHTO M43[1] 3, 357, 4, 467, 5, 56, 57, 6, 67, 68, 7, 78, 8, 89, 9, 10	BEGIN COMPACTIONS AFTER 24" (600 mm) OF MATERIAL OVER THE CHAMBERS IS REACHED. COMPACT ADDITIONAL LAYERS IN 12" (300 mm) MAX LIFTS TO A MIN. 95% PROCTOR DENSITY FOR WELL GRADED MATERIAL AND 95% RELATIVE DENSITY FOR PROCESSED AGGREGATE MATERIALS.
B	**EMBEDMENT STONE:** FILL SURROUNDING THE CHAMBERS FROM THE FOUNDATION STONE ('A' LAYER) TO THE 'C' LAYER ABOVE.	CLEAN, CRUSHED, ANGULAR STONE	AASHTO M43[1] 3, 4	NO COMPACTION REQUIRED.
A	**FOUNDATION STONE:** FILL BELOW CHAMBERS FROM THE SUBGRADE UP TO THE FOOT (BOTTOM) OF THE CHAMBER.	CLEAN, CRUSHED, ANGULAR STONE	AASHTO M43[1] 3, 4	PLATE COMPACT OR ROLL TO ACHIEVE A FLAT SURFACE.[2,3]

PLEASE NOTE:
1. THE LISTED AASHTO DESIGNATIONS ARE FOR GRADATIONS ONLY. THE STONE MUST ALSO BE CLEAN, CRUSHED, ANGULAR. FOR EXAMPLE, A SPECIFICATION FOR #4 STONE WOULD STATE: "CLEAN, CRUSHED, ANGULAR NO. 4 (AASHTO M43) STONE".
2. STORMTECH COMPACTION REQUIREMENTS ARE MET FOR 'A' LOCATION MATERIALS WHEN PLACED AND COMPACTED IN 9" (230 mm) (MAX) LIFTS USING TWO FULL COVERAGES WITH A VIBRATORY COMPACTOR.
3. WHERE INFILTRATION SURFACES MAY BE COMPROMISED BY COMPACTION, FOR STANDARD DESIGN LOAD CONDITIONS, A FLAT SURFACE MAY BE ACHIEVED BY RAKING OR DRAGGING WITHOUT COMPACTION EQUIPMENT. FOR SPECIAL LOAD DESIGNS, CONTACT STORMTECH FOR COMPACTION REQUIREMENTS.
4. ONCE LAYER 'C' IS PLACED, ANY SOIL/MATERIAL CAN BE PLACED IN LAYER 'D' UP TO THE FINISHED GRADE. MOST PAVEMENT SUBBASE SOILS CAN BE USED TO REPLACE THE MATERIAL REQUIREMENTS OF LAYER 'C' OR 'D' AT THE SITE DESIGN ENGINEER'S DISCRETION.

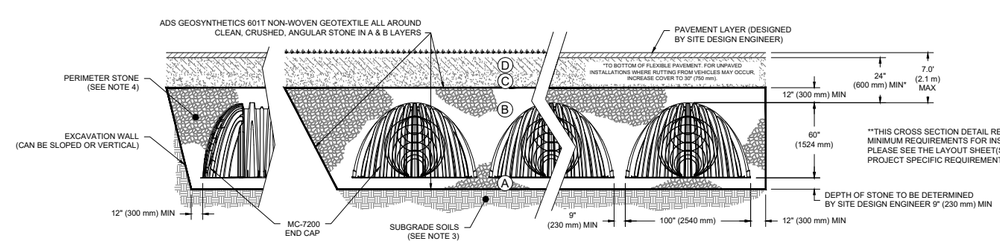

NOTES:

1. CHAMBERS SHALL MEET THE REQUIREMENTS OF ASTM F2418, "STANDARD SPECIFICATION FOR POLYPROPYLENE (PP) CORRUGATED WALL STORMWATER COLLECTION CHAMBERS" CHAMBER CLASSIFICATION 60x101
2. MC-7200 CHAMBERS SHALL BE DESIGNED IN ACCORDANCE WITH ASTM F2787 "STANDARD PRACTICE FOR STRUCTURAL DESIGN OF THERMOPLASTIC CORRUGATED WALL STORMWATER COLLECTION CHAMBERS".
3. THE SITE DESIGN ENGINEER IS RESPONSIBLE FOR ASSESSING THE BEARING RESISTANCE (ALLOWABLE BEARING CAPACITY) OF THE SUBGRADE SOILS AND THE DEPTH OF FOUNDATION STONE WITH CONSIDERATION FOR THE RANGE OF EXPECTED SOIL MOISTURE CONDITIONS.
4. PERIMETER STONE MUST BE EXTENDED HORIZONTALLY TO THE EXCAVATION WALL FOR BOTH VERTICAL AND SLOPED EXCAVATION WALLS.
5. REQUIREMENTS FOR HANDLING AND INSTALLATION:
   - TO MAINTAIN THE WIDTH OF CHAMBERS DURING SHIPPING AND HANDLING, CHAMBERS SHALL HAVE INTEGRAL, INTERLOCKING STACKING LUGS.
   - TO ENSURE A SECURE JOINT DURING INSTALLATION AND BACKFILL, THE HEIGHT OF THE CHAMBER JOINT SHALL NOT BE LESS THAN 3".
   - TO ENSURE THE INTEGRITY OF THE ARCH SHAPE DURING INSTALLATION, a) THE ARCH STIFFNESS CONSTANT AS DEFINED IN SECTION 6.2.8 OF ASTM F2418 SHALL BE GREATER THAN OR EQUAL TO 500 LBS/FT/%. AND b) TO RESIST CHAMBER DEFORMATION DURING INSTALLATION AT ELEVATED TEMPERATURES (ABOVE 73° F / 23° C), CHAMBERS SHALL BE PRODUCED FROM REFLECTIVE GOLD OR YELLOW COLORS.

1 MC-7200 CROSS SECTION DETAIL

DATE:
DRAWN:
PROJECT NO:
REVIEWED:
NOT TO SCALE
REV:

MC-7200
STANDARD DETAILS

StormTech®
Chamber System
888-892-2694 | WWW.STORMTECH.COM

4640 TRUEMAN BLVD
HILLIARD, OH 43026

SHEET

ADVANCED DRAINAGE SYSTEMS, INC. ("ADS") HAS PREPARED THIS DETAIL BASED ON REFERENCED STANDARDS. ADS HAS NOT PERFORMED ANY ENGINEERING OR DESIGN SERVICES FOR THIS PROJECT, NOR HAS ADS INDEPENDENTLY VERIFIED THE INFORMATION SUPPLIED. THE INSTALLATION DETAILS PROVIDED HEREIN ARE GENERAL RECOMMENDATIONS AND ARE NOT SPECIFIC FOR THIS PROJECT, UNLESS THE PLANS ARE SIGNED AND SEALED BY THE SITE DESIGN ENGINEER. THE SITE DESIGN ENGINEER SHALL REVIEW THESE DETAILS PRIOR TO CONSTRUCTION AND SEALING THE DOCUMENT. IT IS THE SITE DESIGN ENGINEER'S RESPONSIBILITY TO ENSURE THE DETAILS PROVIDED HEREIN MEETS OR EXCEEDS THE APPLICABLE NATIONAL, STATE, OR LOCAL REQUIREMENTS AND TO ENSURE THAT THE DETAILS PROVIDED HEREIN ARE ACCEPTABLE FOR THIS PROJECT.

ACCEPTABLE FILL MATERIALS: STORMTECH MC-7200 CHAMBER SYSTEMS

MATERIAL LOCATION		DESCRIPTION	AASHTO MATERIAL CLASSIFICATIONS	COMPACTION / DENSITY REQUIREMENT
D	**FINAL FILL:** FILL MATERIAL FOR LAYER 'D' STARTS FROM THE TOP OF THE 'C' LAYER TO THE BOTTOM OF FLEXIBLE PAVEMENT OR UNPAVED FINISHED GRADE ABOVE. NOTE THAT PAVEMENT SUBBASE MAY BE PART OF THE 'D' LAYER	ANY SOIL/ROCK MATERIALS, NATIVE SOILS, OR PER ENGINEER'S PLANS. CHECK PLANS FOR PAVEMENT SUBGRADE REQUIREMENTS.	N/A	PREPARE PER SITE DESIGN ENGINEER'S PLANS. PAVED INSTALLATIONS MAY HAVE STRINGENT MATERIAL AND PREPARATION REQUIREMENTS.
C	**INITIAL FILL:** FILL MATERIAL FOR LAYER 'C' STARTS FROM THE TOP OF THE EMBEDMENT STONE ('B' LAYER) TO 24" (600 mm) ABOVE THE TOP OF THE CHAMBER. NOTE THAT PAVEMENT SUBBASE MAY BE A PART OF THE 'C' LAYER.	GRANULAR WELL-GRADED SOIL/AGGREGATE MIXTURES, <35% FINES OR PROCESSED AGGREGATE. MOST PAVEMENT SUBBASE MATERIALS CAN BE USED IN LIEU OF THIS LAYER.	AASHTO M145[1] A-1, A-2-4, A-3 OR AASHTO M43[1] 3, 357, 4, 467, 5, 56, 57, 6, 67, 68, 7, 78, 8, 89, 9, 10	BEGIN COMPACTIONS AFTER 24" (600 mm) OF MATERIAL OVER THE CHAMBERS IS REACHED. COMPACT ADDITIONAL LAYERS IN 12" (300 mm) MAX LIFTS TO A MIN. 95% PROCTOR DENSITY FOR WELL GRADED MATERIAL AND 95% RELATIVE DENSITY FOR PROCESSED AGGREGATE MATERIALS.
B	**EMBEDMENT STONE:** FILL SURROUNDING THE CHAMBERS FROM THE FOUNDATION STONE ('A' LAYER) TO THE 'C' LAYER ABOVE.	CLEAN, CRUSHED, ANGULAR STONE	AASHTO M43[1] 3, 4	NO COMPACTION REQUIRED.
A	**FOUNDATION STONE:** FILL BELOW CHAMBERS FROM THE SUBGRADE UP TO THE FOOT (BOTTOM) OF THE CHAMBER.	CLEAN, CRUSHED, ANGULAR STONE	AASHTO M43[1] 3, 4	PLATE COMPACT OR ROLL TO ACHIEVE A FLAT SURFACE.[2,3]

PLEASE NOTE:
1. THE LISTED AASHTO DESIGNATIONS ARE FOR GRADATIONS ONLY. THE STONE MUST ALSO BE CLEAN, CRUSHED, ANGULAR. FOR EXAMPLE, A SPECIFICATION FOR #4 STONE WOULD STATE: "CLEAN, CRUSHED, ANGULAR NO. 4 (AASHTO M43) STONE".
2. STORMTECH COMPACTION REQUIREMENTS ARE MET FOR 'A' LOCATION MATERIALS WHEN PLACED AND COMPACTED IN 9" (230 mm) (MAX) LIFTS USING TWO FULL COVERAGES WITH A VIBRATORY COMPACTOR.
3. WHERE INFILTRATION SURFACES MAY BE COMPROMISED BY COMPACTION, FOR STANDARD DESIGN LOAD CONDITIONS, A FLAT SURFACE MAY BE ACHIEVED BY RAKING OR DRAGGING WITHOUT COMPACTION EQUIPMENT. FOR SPECIAL LOAD DESIGNS, CONTACT STORMTECH FOR COMPACTION REQUIREMENTS.
4. ONCE LAYER 'C' IS PLACED, ANY SOIL/MATERIAL CAN BE PLACED IN LAYER 'D' UP TO THE FINISHED GRADE. MOST PAVEMENT SUBBASE SOILS CAN BE USED TO REPLACE THE MATERIAL REQUIREMENTS OF LAYER 'C' OR 'D' AT THE SITE DESIGN ENGINEER'S DISCRETION.

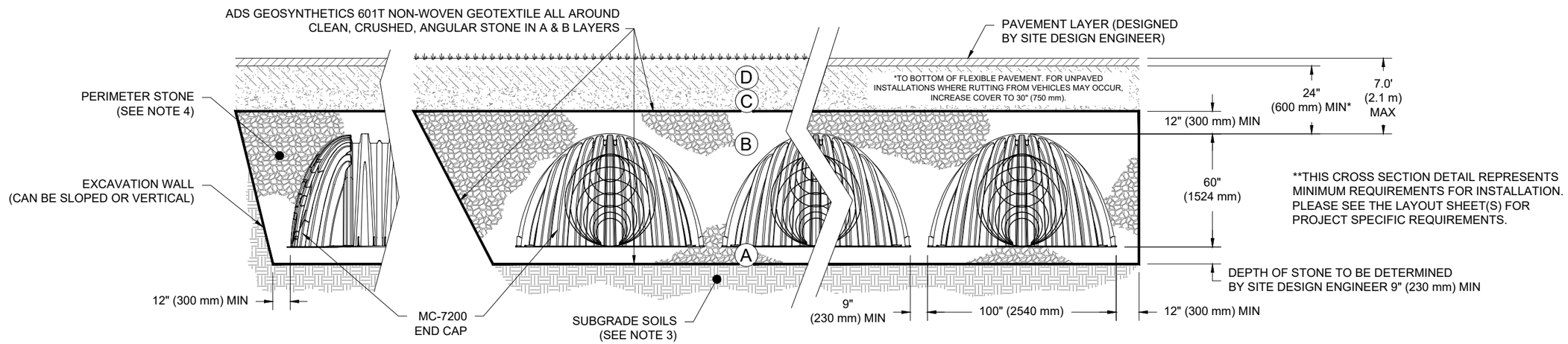

* FOR COVER DEPTHS GREATER THAN 7.0' (2.1 m) PLEASE CONTACT STORMTECH

NOTES:

1. CHAMBERS SHALL MEET THE REQUIREMENTS OF ASTM F2418, "STANDARD SPECIFICATION FOR POLYPROPYLENE (PP) CORRUGATED WALL STORMWATER COLLECTION CHAMBERS" CHAMBER CLASSIFICATION 60x101
2. MC-7200 CHAMBERS SHALL BE DESIGNED IN ACCORDANCE WITH ASTM F2787 "STANDARD PRACTICE FOR STRUCTURAL DESIGN OF THERMOPLASTIC CORRUGATED WALL STORMWATER COLLECTION CHAMBERS".
3. THE SITE DESIGN ENGINEER IS RESPONSIBLE FOR ASSESSING THE BEARING RESISTANCE (ALLOWABLE BEARING CAPACITY) OF THE SUBGRADE SOILS AND THE DEPTH OF FOUNDATION STONE WITH CONSIDERATION FOR THE RANGE OF EXPECTED SOIL MOISTURE CONDITIONS.
4. PERIMETER STONE MUST BE EXTENDED HORIZONTALLY TO THE EXCAVATION WALL FOR BOTH VERTICAL AND SLOPED EXCAVATION WALLS.
5. REQUIREMENTS FOR HANDLING AND INSTALLATION:
   - TO MAINTAIN THE WIDTH OF CHAMBERS DURING SHIPPING AND HANDLING, CHAMBERS SHALL HAVE INTEGRAL, INTERLOCKING STACKING LUGS.
   - TO ENSURE A SECURE JOINT DURING INSTALLATION AND BACKFILL, THE HEIGHT OF THE CHAMBER JOINT SHALL NOT BE LESS THAN 3".
   - TO ENSURE THE INTEGRITY OF THE ARCH SHAPE DURING INSTALLATION, a) THE ARCH STIFFNESS CONSTANT AS DEFINED IN SECTION 6.2.8 OF ASTM F2418 SHALL BE GREATER THAN OR EQUAL TO 500 LBS/FT/%. AND b) TO RESIST CHAMBER DEFORMATION DURING INSTALLATION AT ELEVATED TEMPERATURES (ABOVE 73° F / 23° C), CHAMBERS SHALL BE PRODUCED FROM REFLECTIVE GOLD OR YELLOW COLORS.

MC-7200
STANDARD CROSS SECTION

DATE: 9/13/22 | DRAWN: KLJ
PROJECT #: | CHECKED: KLJ

DATE	DRWN	CHKD	DESCRIPTION

StormTech®
Chamber System
888-892-2694 | WWW.STORMTECH.COM

ADS
4640 TRUEMAN BLVD
HILLIARD, OH 43026

THIS DRAWING HAS BEEN PREPARED BASED ON INFORMATION PROVIDED TO ADS UNDER THE DIRECTION OF THE SITE DESIGN ENGINEER OR OTHER PROJECT REPRESENTATIVE. THE SITE DESIGN ENGINEER SHALL REVIEW THIS DRAWING PRIOR TO CONSTRUCTION. IT IS THE ULTIMATE RESPONSIBILITY OF THE SITE DESIGN ENGINEER TO ENSURE THAT THE PRODUCT(S) DEPICTED AND ALL ASSOCIATED DETAILS MEET ALL APPLICABLE LAWS, REGULATIONS, AND PROJECT REQUIREMENTS.

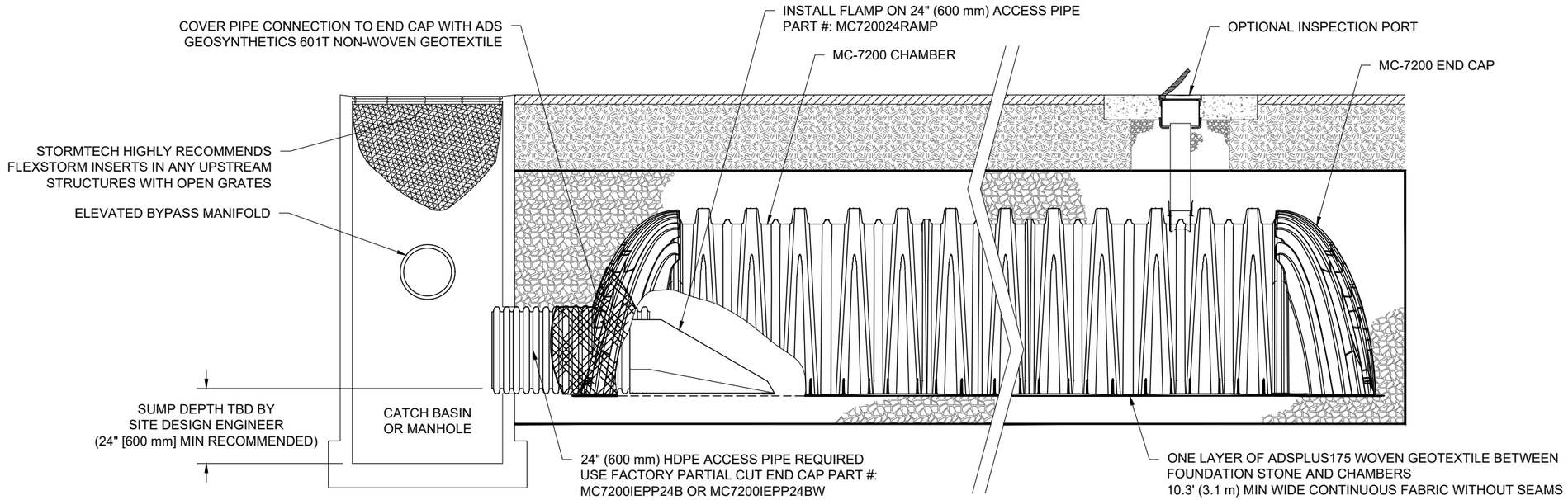

MC-7200 ISOLATOR ROW PLUS DETAIL
NTS

INSPECTION & MAINTENANCE

STEP 1) INSPECT ISOLATOR ROW PLUS FOR SEDIMENT
- A. INSPECTION PORTS (IF PRESENT)
  - A.1. REMOVE/OPEN LID ON NYLOPLAST INLINE DRAIN
  - A.2. REMOVE AND CLEAN FLEXSTORM FILTER IF INSTALLED
  - A.3. USING A FLASHLIGHT AND STADIA ROD, MEASURE DEPTH OF SEDIMENT AND RECORD ON MAINTENANCE LOG
  - A.4. LOWER A CAMERA INTO ISOLATOR ROW PLUS FOR VISUAL INSPECTION OF SEDIMENT LEVELS (OPTIONAL)
  - A.5. IF SEDIMENT IS AT, OR ABOVE, 3" (80 mm) PROCEED TO STEP 2. IF NOT, PROCEED TO STEP 3.
- B. ALL ISOLATOR PLUS ROWS
  - B.1. REMOVE COVER FROM STRUCTURE AT UPSTREAM END OF ISOLATOR ROW PLUS
  - B.2. USING A FLASHLIGHT, INSPECT DOWN THE ISOLATOR ROW PLUS THROUGH OUTLET PIPE
    - i) MIRRORS ON POLES OR CAMERAS MAY BE USED TO AVOID A CONFINED SPACE ENTRY
    - ii) FOLLOW OSHA REGULATIONS FOR CONFINED SPACE ENTRY IF ENTERING MANHOLE
  - B.3. IF SEDIMENT IS AT, OR ABOVE, 3" (80 mm) PROCEED TO STEP 2. IF NOT, PROCEED TO STEP 3.

STEP 2) CLEAN OUT ISOLATOR ROW PLUS USING THE JETVAC PROCESS
- A. A FIXED CULVERT CLEANING NOZZLE WITH REAR FACING SPREAD OF 45" (1.1 m) OR MORE IS PREFERRED
- B. APPLY MULTIPLE PASSES OF JETVAC UNTIL BACKFLUSH WATER IS CLEAN
- C. VACUUM STRUCTURE SUMP AS REQUIRED

STEP 3) REPLACE ALL COVERS, GRATES, FILTERS, AND LIDS; RECORD OBSERVATIONS AND ACTIONS.

STEP 4) INSPECT AND CLEAN BASINS AND MANHOLES UPSTREAM OF THE STORMTECH SYSTEM.

NOTES

1. INSPECT EVERY 6 MONTHS DURING THE FIRST YEAR OF OPERATION. ADJUST THE INSPECTION INTERVAL BASED ON PREVIOUS OBSERVATIONS OF SEDIMENT ACCUMULATION AND HIGH WATER ELEVATIONS.
2. CONDUCT JETTING AND VACTORING ANNUALLY OR WHEN INSPECTION SHOWS THAT MAINTENANCE IS NECESSARY.

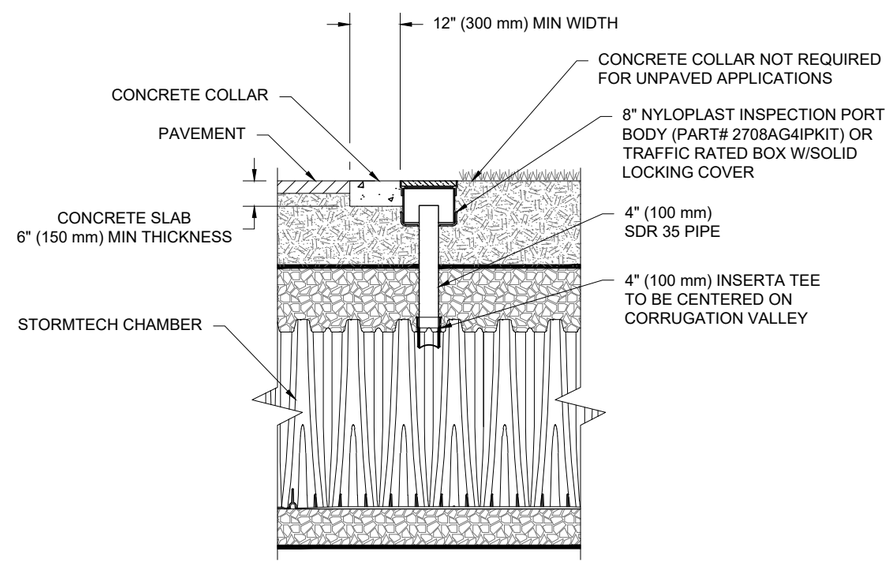

NOTE:
INSPECTION PORTS MAY BE CONNECTED THROUGH ANY CHAMBER CORRUGATION VALLEY.

4" PVC INSPECTION PORT DETAIL (MC SERIES CHAMBER)
NTS

MC-7200
ISOLATOR ROW PLUS DETAILS

DATE: 9/13/22 DRAWN: KLJ
PROJECT #: CHECKED: KLJ

DATE	DRWN	CHKD	DESCRIPTION

StormTech®
Chamber System
888-892-2694 | WWW.STORMTECH.COM

ADS
4640 TRUEMAN BLVD
HILLIARD, OH 43026

THIS DRAWING HAS BEEN PREPARED BASED ON INFORMATION PROVIDED TO ADS UNDER THE DIRECTION OF THE SITE DESIGN ENGINEER OR OTHER PROJECT REPRESENTATIVE. THE SITE DESIGN ENGINEER SHALL REVIEW THIS DRAWING PRIOR TO CONSTRUCTION. IT IS THE ULTIMATE RESPONSIBILITY OF THE SITE DESIGN ENGINEER TO ENSURE THAT THE PRODUCT(S) DEPICTED AND ALL ASSOCIATED DETAILS MEET ALL APPLICABLE LAWS, REGULATIONS, AND PROJECT REQUIREMENTS.

MC-7200 TECHNICAL SPECIFICATION

NTS

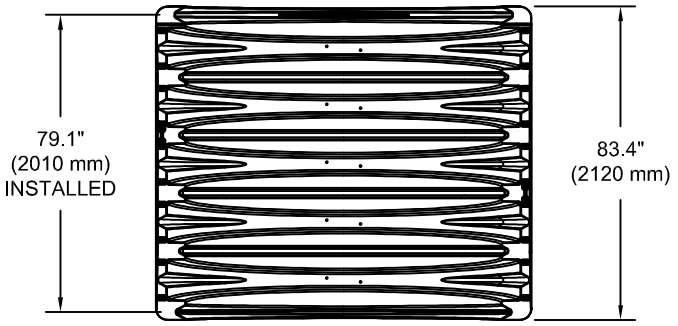

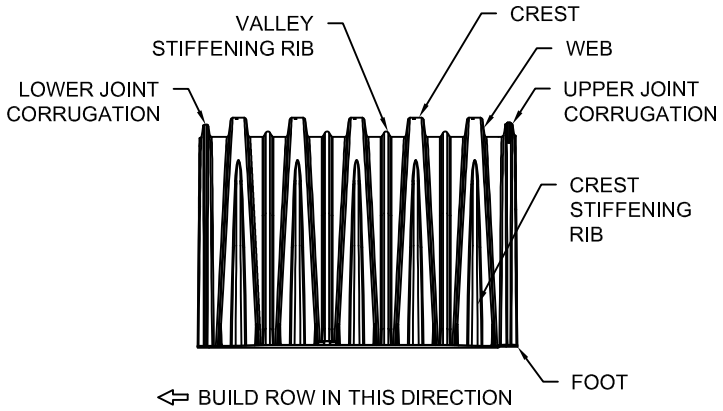

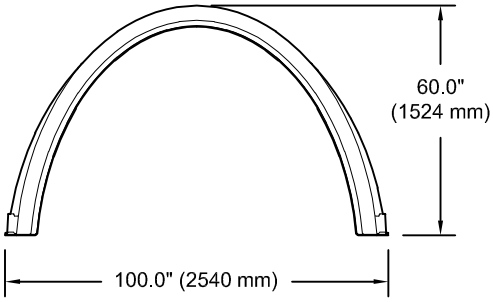

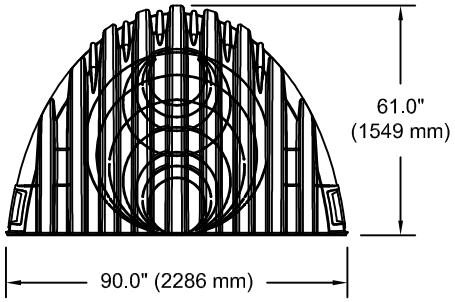

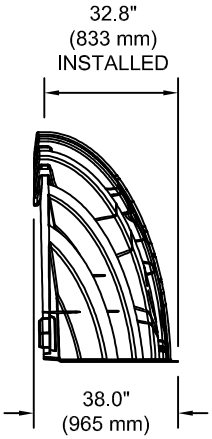

NOMINAL CHAMBER SPECIFICATIONS

SIZE (W X H X INSTALLED LENGTH)	100.0" X 60.0" X 79.1"	(2540 mm X 1524 mm X 2010 mm)
CHAMBER STORAGE	175.9 CUBIC FEET	(4.98 m³)
MINIMUM INSTALLED STORAGE*	267.3 CUBIC FEET	(7.56 m³)
WEIGHT (NOMINAL)	205 lbs.	(92.9 kg)

NOMINAL END CAP SPECIFICATIONS

SIZE (W X H X INSTALLED LENGTH)	90.0" X 61.0" X 32.8"	(2286 mm X 1549 mm X 833 mm)
END CAP STORAGE	39.5 CUBIC FEET	(1.12 m³)
MINIMUM INSTALLED STORAGE*	115.3 CUBIC FEET	(3.26 m³)
WEIGHT (NOMINAL)	90 lbs.	(40.8 kg)

*ASSUMES 12" (305 mm) STONE ABOVE, 9" (229 mm) STONE FOUNDATION AND BETWEEN CHAMBERS, 12" (305 mm) STONE PERIMETER IN FRONT OF END CAPS AND 40% STONE POROSITY.

PARTIAL CUT HOLES AT BOTTOM OF END CAP FOR PART NUMBERS ENDING WITH "B"
PARTIAL CUT HOLES AT TOP OF END CAP FOR PART NUMBERS ENDING WITH "T"
END CAPS WITH A PREFABRICATED WELDED STUB END WITH "W"

PART #	STUB	B	C
MC7200IEPP06T	6" (150 mm)	42.54" (1081 mm)	---
MC7200IEPP06B		---	0.86" (22 mm)
MC7200IEPP08T	8" (200 mm)	40.50" (1029 mm)	---
MC7200IEPP08B		---	1.01" (26 mm)
MC7200IEPP10T	10" (250 mm)	38.37" (975 mm)	---
MC7200IEPP10B		---	1.33" (34 mm)
MC7200IEPP12T	12" (300 mm)	35.69" (907 mm)	---
MC7200IEPP12B		---	1.55" (39 mm)
MC7200IEPP15T	15" (375 mm)	32.72" (831 mm)	---
MC7200IEPP15B		---	1.70" (43 mm)
MC7200IEPP18T	18" (450 mm)	29.36" (746 mm)	---
MC7200IEPP18TW			
MC7200IEPP18B		---	1.97" (50 mm)
MC7200IEPP18BW			
MC7200IEPP24T	24" (600 mm)	23.05" (585 mm)	---
MC7200IEPP24TW			
MC7200IEPP24B		---	2.26" (57 mm)
MC7200IEPP24BW			
MC7200IEPP30BW	30" (750 mm)	---	2.95" (75 mm)
MC7200IEPP36BW	36" (900 mm)	---	3.25" (83 mm)
MC7200IEPP42BW	42" (1050 mm)	---	3.55" (90 mm)

NOTE: ALL DIMENSIONS ARE NOMINAL

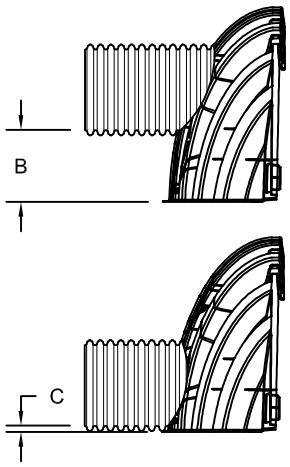

CUSTOM PREFABRICATED INVERTS ARE AVAILABLE UPON REQUEST. INVENTORIED MANIFOLDS INCLUDE 12-24" (300-600 mm) SIZE ON SIZE AND 15-48" (375-1200 mm) ECCENTRIC MANIFOLDS. CUSTOM INVERT LOCATIONS ON THE MC-7200 END CAP CUT IN THE FIELD ARE NOT RECOMMENDED FOR PIPE SIZES GREATER THAN 10" (250 mm). THE INVERT LOCATION IN COLUMN 'B' ARE THE HIGHEST POSSIBLE FOR THE PIPE SIZE.

Appendix C:

EMFAC2017 Output

Source: EMFAC2017 (v1.0.3) Emissions Inventory
Region Type: Air District
Region: South Coast AQMD
Calendar Year: 2023
Season: Annual
Vehicle Classification: EMFAC2007 Categories
Units: miles/day for VMT, trips/day for Trips, tons/day for Emissions, 1000 gallons/day for Fuel Consumption

Region	Calendar Y	Vehicle Cat	Model Year	Speed	Fuel	Population	VMT	Trips	Fuel Consumption	Fuel Consumption	Total Fuel Consumption	VMT	Total VMT	Miles Per Gallon	Vehicle Class
South Coas	2023	HHDT	Aggregate	Aggregate	Gasoline	75.10442936	8265.097	1502.689	1.936286145	1936.286145	1913466.474	8265.097	13656273.03	7.14	**HHD**
South Coas	2023	HHDT	Aggregate	Aggregate	Diesel	109818.6753	13648008	1133618	1911.530188	1911530.188		13648008			
South Coas	2023	LDA	Aggregate	Aggregate	Gasoline	6635002.295	2.53E+08	31352477	7971.24403	7971244.03	8020635.698	2.53E+08	255180358.3	31.82	**LDA**
South Coas	2023	LDA	Aggregate	Aggregate	Diesel	62492.97958	2469816	297086.6	49.3916685	49391.6685		2469816			
South Coas	2023	LDA	Aggregate	Aggregate	Electricity	150700.3971	6237106	751566	0	0		6237106			
South Coas	2023	LDT1	Aggregate	Aggregate	Gasoline	758467.6481	27812996	3504563	1023.913006	1023913.006	1024279.466	27812996	27821405.09	27.16	**LDT1**
South Coas	2023	LDT1	Aggregate	Aggregate	Diesel	360.7799144	8408.618	1256.88	0.366459477	366.4594769		8408.618			
South Coas	2023	LDT1	Aggregate	Aggregate	Electricity	7122.93373	303507.5	35798.19	0	0		303507.5			
South Coas	2023	LDT2	Aggregate	Aggregate	Gasoline	2285150.139	85272416	10723315	3338.798312	3338798.312	3356536.438	85272416	85922778.34	25.60	**LDT2**
South Coas	2023	LDT2	Aggregate	Aggregate	Diesel	15594.68309	650362.8	76635.83	17.73812611	17738.12611		650362.8			
South Coas	2023	LDT2	Aggregate	Aggregate	Electricity	28809.63735	917592.8	145405.4	0	0		917592.8			
South Coas	2023	LHDT1	Aggregate	Aggregate	Gasoline	174910.3847	6216643	2605904	583.3851736	583385.1736	811563.1022	6216643	11211395.79	13.81	**LHDT1**
South Coas	2023	LHDT1	Aggregate	Aggregate	Diesel	125545.0822	4994753	1579199	228.1779285	228177.9285		4994753			
South Coas	2023	LHDT2	Aggregate	Aggregate	Gasoline	30102.75324	1034569	448486.2	111.5753864	111575.3864	209423.5025	1034569	2969599.008	14.18	**LHDT2**
South Coas	2023	LHDT2	Aggregate	Aggregate	Diesel	50003.13116	1935030	628976.5	97.84811618	97848.11618		1935030			
South Coas	2023	MCY	Aggregate	Aggregate	Gasoline	305044.5141	2104624	610089	57.849018	57849.018	57849.018	2104624	2104623.657	36.38	**MCY**
South Coas	2023	MDV	Aggregate	Aggregate	Gasoline	1589862.703	55684188	7354860	2693.883526	2693883.526	2744536.341	55684188	57109879.73	20.81	**MDV**
South Coas	2023	MDV	Aggregate	Aggregate	Diesel	36128.1019	1425691	176566.9	50.65281491	50652.81491		1425691			
South Coas	2023	MDV	Aggregate	Aggregate	Electricity	16376.67653	537591.7	83475.95	0	0		537591.7			
South Coas	2023	MH	Aggregate	Aggregate	Gasoline	34679.50542	330042.9	3469.338	63.26295123	63262.95123	74893.26955	330042.9	454344.9436	6.07	**MH**
South Coas	2023	MH	Aggregate	Aggregate	Diesel	13122.69387	124302	1312.269	11.63031832	11630.31832		124302			
South Coas	2023	MHDT	Aggregate	Aggregate	Gasoline	25624.3151	1363694	512691.3	265.2060557	265206.0557	989975.6425	1363694	9484317.768	9.58	**MHDT**
South Coas	2023	MHDT	Aggregate	Aggregate	Diesel	122124.488	8120623	1221858	724.7695868	724769.5868		8120623			
South Coas	2023	OBUS	Aggregate	Aggregate	Gasoline	5955.291639	245774	119153.5	48.07750689	48077.50689	86265.88761	245774	579743.8353	6.72	**OBUS**
South Coas	2023	OBUS	Aggregate	Aggregate	Diesel	4286.940093	333969.8	41558.29	38.18838072	38188.38072		333969.8			
South Coas	2023	SBUS	Aggregate	Aggregate	Gasoline	2783.643068	112189.6	11134.57	12.19474692	12194.74692	39638.85935	112189.6	323043.5203	8.15	**SBUS**
South Coas	2023	SBUS	Aggregate	Aggregate	Diesel	6671.825716	210853.9	76991.94	27.44411242	27444.11242		210853.9			
South Coas	2023	UBUS	Aggregate	Aggregate	Gasoline	957.7686184	89782.63	3831.074	17.62416327	17624.16327	17863.66378	89782.63	91199.2533	5.11	**UBUS**
South Coas	2023	UBUS	Aggregate	Aggregate	Diesel	13.00046095	1416.622	52.00184	0.239500509	239.5005093		1416.622			
South Coas	2023	UBUS	Aggregate	Aggregate	Electricity	16.11693886	1320.163	64.46776	0			1320.163			