Considered but Rejected Alternative: South Toe Alternative

F

APPENDIX

MEMORANDUM

Santa Maria River Levee Trail
Wallace Group Project No: 1105-0003

WALLACE GROUP®

CIVIL AND TRANSPORTATION ENGINEERING
CONSTRUCTION MANAGEMENT
LANDSCAPE ARCHITECTURE
MECHANICAL ENGINEERING
PLANNING
PUBLIC WORKS ADMINISTRATION
SURVEYING / GIS SOLUTIONS
WATER RESOURCES

Date: March 24, 2026

To: Teri Wissler Adam, EMC Planning Group Inc.

From: Michael Hausman, PE / Jorge Aguilar, PE

Subject: South Toe Trail Alternative Concept Review

Introduction

The purpose of this memorandum is to discuss the anticipated feasibility of an alternative alignment for the Santa Maria River Levee Trail (SMRLT) near the southern toe of the levee for the 3-mile portion of the trail from the western connection at Peralta Street to the Bonita School Road connection to the east (see attached South Toe Trail Concept Exhibit). This alternative is to compare against a top of levee alignment in this portion of the trail. The layout shown in the attachment is a conceptual layout of the trail which does not include investigated property boundaries through title research of the corridor. If the concept is further advanced, boundary investigation is strongly advised for further feasibility.

Considerations

There are various attributes to consider with the South Toe Alternative, including accessibility, proximity to agricultural activities, stormwater/drainage, trail user safety, potential right-of-way impacts, and relative cost. These aspects are conceptually explored in the following sections.

Accessibility

The primary benefit of the South Toe Alternative is the ability to provide a paved trail surface between Bonita School Road and the City of Guadalupe with more flexible uses and less disturbance to Santa Barbara County Flood Control operations and maintenance. This would provide a more consistent surface that would allow for road bikes with narrower tires as well as those who require mobility assistance devices to this portion of the trail. Flood control and Army Corp regulations currently apply to any consideration of modifying the levee surface. The top of levee surface could potentially be paved with asphalt through coordination with and approval by the US Army Corps of Engineers (USACE), though that pavement would require regularly scheduled maintenance and treatment that would increase costs and likely face environmental challenges for petroleum products near the waterway. If concrete paving was to be considered, it too would increase costs and require significant regulatory approval processing.

WALLACE GROUP
A California Corporation

612 CLARION CT
SAN LUIS OBISPO
CALIFORNIA 93401

T 805 544-4011
F 805 544-4294

www.wallacegroup.us

It should be noted that this alignment is only being considered from Bonita School Road to Guadalupe, so this does not provide an accessible trail connection from the City of Guadalupe to the City of Santa Maria.

Proximity to Agricultural Activities

Figure 1: From left to right: existing levee surface, proposed south toe trail alignment, farmland drainage ditch, access road, farmland

The majority of the southern toe of the levee between Peralta Street and Bonita School Road is bordered by agricultural fields, with the farmland and levee separated by an unpaved access road approximately 20 feet in width. Due to the immediate adjacency to agricultural activities, a trail located either on the levee or at the south toe of the levee could be subject to overspray during the application of pesticides. The south toe location would bring the trail alignment even closer to the areas of spraying. The County Agricultural Commissioner currently implements a plan for receiving notices of impending spraying activity from neighboring farmers with follow-up actions. In line with current procedures, the Commissioner would notify relevant County staff of agricultural activities that may require temporary closures in specific areas. Santa Barbara County staff would then be responsible for enacting temporary closures and reopening trail gates when appropriate.

Based on prior input provided by County staff, we understand that the farmland owners desire is for trail users to be as far as possible from their crop growing area. Moving the trail closer to the farming operations is in direct contrast to that input.

Other noted farm operation concerns include the potential of trail users tampering with agricultural activities including the potential for crop theft, littering in the fields, and animal waste contaminating the crops. While this could be mitigated with the

construction of a continuous security fence along the entire length of the trail, fencing would increase the cost of the trail significantly.

Stormwater/Drainage Impacts

Overland surface drainage from the surrounding area and farmland generally flows north towards the levee and then west along the southern toe of the levee within agricultural ditches. This flow or presence of ditches may present challenges with locating the trail at the southern toe of the levee or render the trail unusable at times if water causes flooding or trail damage. While this preliminary effort did not include an area wide drainage assessment, it is reasonable to surmise that during storm events, the trail area could be inundated by stormwater flows.

A potential benefit of the South Toe Alternative is the all-weather surface that could be more user friendly for lower-level wet periods where flooding or ground saturation are not considerations. Due to regulations relating to altering the levee structure, paving the top of the levee would require coordination with and approval by the USACE. By locating the trail adjacent to but not on the levee, the surface could be paved with a more traditional structural section of hot mix asphalt over aggregate base. This surface would be more readily walkable/rideable during and immediately after storm events. However, larger volumes of drainage flooding could be problematic and runoff from the agricultural activities could also create safety concerns for trail users. Altering the grading of the drainage ditches to construct the trail and/or building a raised trail section could also potentially cause drainage pattern changes including localized flooding issues in the fields or require potential grading of the levee structure itself. Due to possible drainage and erosion concerns where the trail connects to the levee toe, construction of a small berm or shallow ditch may be recommended to prevent runoff from the levee slope from flowing onto the trail. However, incorporating a berm or ditch could introduce ongoing maintenance considerations.

Another stormwater consideration and potential impact comes in the form of the post construction requirements (PCRs) that might apply depending on the regulations at the time of construction due to the increase in impervious area brought about by the new paved trail surface. The County of Santa Barbara and the Central Coast Regional Water Quality Control Board (RWQCB) require that projects meet certain standards based on the amount of new impervious area created. Currently some exclusions apply to bike trails not adjacent to the roadways where the overland flow continues across the trail to vegetated areas. Due to the total area of the proposed pavement and its proximity to agricultural activities, it is possible that all PCRs could be triggered including LID treatment and peak flow management. If applicable, this could require additional area and investment to construct facilities such as treatment swales and detention/retention basins.

User Safety

Unlike a trail on top of the levee, a trail at the south toe could introduce a concern of user safety or security due to the more limited visibility of the lower alignment. The top of the levee location offers greater consistent visibility for trail users, giving them a better vantage point to see potential hazards. By locating the trail at the south toe, visibility would be reduced relative to a top of levee alignment.

Additionally, as discussed regarding stormwater, overland flow across the adjacent farmlands has the potential to bring with it higher concentrations of chemicals used to fertilize or combat pests immediately after storm events.

Environmental Mitigation

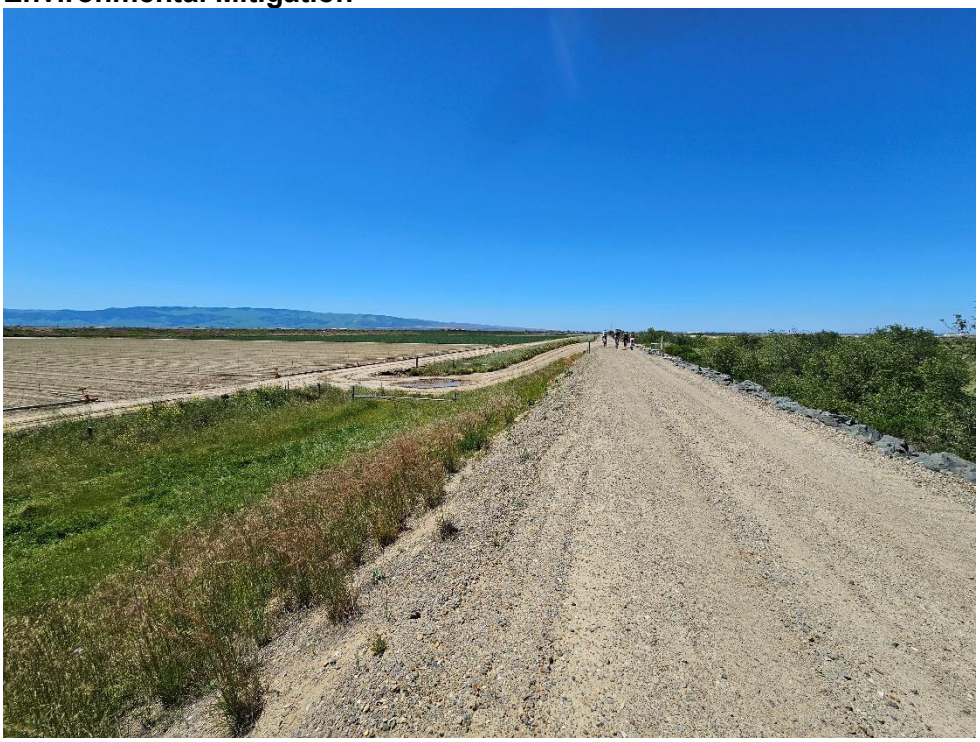

Figure 2: South toe area (right) shown with plant species consistent with a seasonal wetland

The existing vegetation type of the south toe alignment area is primarily seasonal grasses and wetlands. The Regional Water Quality Control Board (RWQCB) and Army Corps of Engineers require mitigation planting when this type of habitat is removed. Based on an assumed impacted width of approximately 20 feet and a length of three miles, the area impacted by the south toe trail would be approximately 320,000 square feet. Assuming a 2:1 mitigation ratio, this would require approximately 640,000 square feet or 14.7 acres of mitigation planting. There is insufficient space available on site for this mitigation planting, so a dedicated area would need to be identified offsite. A preliminary estimate for the cost of mitigation has been estimated at $400,000. This includes surveys and mapping, grading, fencing and signage, maintenance, and project management.

Permitting
Moving the trail alignment from a uniform location along the top of the levee to a transition to the toe of the levee would introduce variations and associated grading against the existing levee as drainages are crossed. Due to the grading required along portions of the trail to locate it along the toe of the levee, regrading of or modifications to the levee prism would be required. Grading of the existing levee sides has the potential to present logistical and regulatory challenges. The existing levee slopes are quite steep, so grading would require additional steep slopes and cut and/or fill in order to conform to the levee. Modification to the levee prism is expected to require the involvement and approval of multiple agencies, including the Army Corps of Engineers, the Department of Fish and Wildlife, and the Santa Barbara County Flood Control and Water Conservation District.

Environmental considerations would also need to be reviewed against the “Least Environmentally Damaging Practicable Alternative” (LEDPA) which could eliminate or significantly impact the viability of the toe alternative, however that is not within the scope of this preliminary engineering assessment.

Right of Way
The existing property line between the levee and the farmland to the south varies but sits mostly at the southern toe of the levee. The southern toe alignment would likely require temporary construction easements and may require permanent right of way acquisition to accommodate the trail geometry and required cut/fill slopes. In addition, if stormwater treatment facilities are needed these could require right of way (ROW) acquisition. Along with other considerations, this aspect would require more study and investigation.

Relative Construction and Maintenance Costs
Due to the likelihood of softer existing soil conditions at the toe of the levee, stormwater inundation, and maintenance vehicle access requirements, the trail would likely need to be paved with a combination of aggregate base and hot mix asphalt (HMA). Removing unsuitable materials, construction of the subbase, base and HMA surface would increase the cost of the trail significantly compared to utilizing the existing hardened trail surface on the top of the levee. Assuming a standard trail section of 3 inches of HMA over 7 inches of class 2 aggregate base and a width of 12 feet, approximately 6,000 CY of excavation would be required. This assumes that the trail would mostly be at existing grade, with excavation to allow for the construction of the trail structural section. In addition to the excavation, the primary costs would include approximately 3,400 tons of HMA and approximately 6,000 CY of class 2 aggregate base. Based on current material prices, the cost for these two items might range from $1.5 to $2 million in addition to the clearing and grubbing and excavation costs. ROW, mitigation planting and mitigation area acquisition are other cost considerations that are unknown at this point. Pavement surfacing would need to be maintained in any setting but potentially more so if field flooding were to occur at regular intervals during wet seasons.

Conclusion

Based on the preliminary considerations contained in this concept overview, the South Toe Alternative is viable but presents additional challenges that are not applicable or less challenging to the top of levee alignment. The South Toe Alternative provides a better riding surface and alleviates some vegetation maintenance needs on the southern side of the levee for a portion of the trail. However the South Toe alignment moves users closer to agricultural activities, includes additional drainage and stormwater complexities and potential costs, is not as visible a location as the top of levee for users of the trail, triggers wetland environmental impact and mitigation factors, is anticipated to also trigger more regulatory and engineering complexity as they relate to the existing levee prism modifications, has the potential to require ROW purchase for the trail in addition to the mitigation ROW needs, and is anticipated to have higher initial construction and longer term facility maintenance costs.

Attachment: South Toe Trail Concept Exhibit

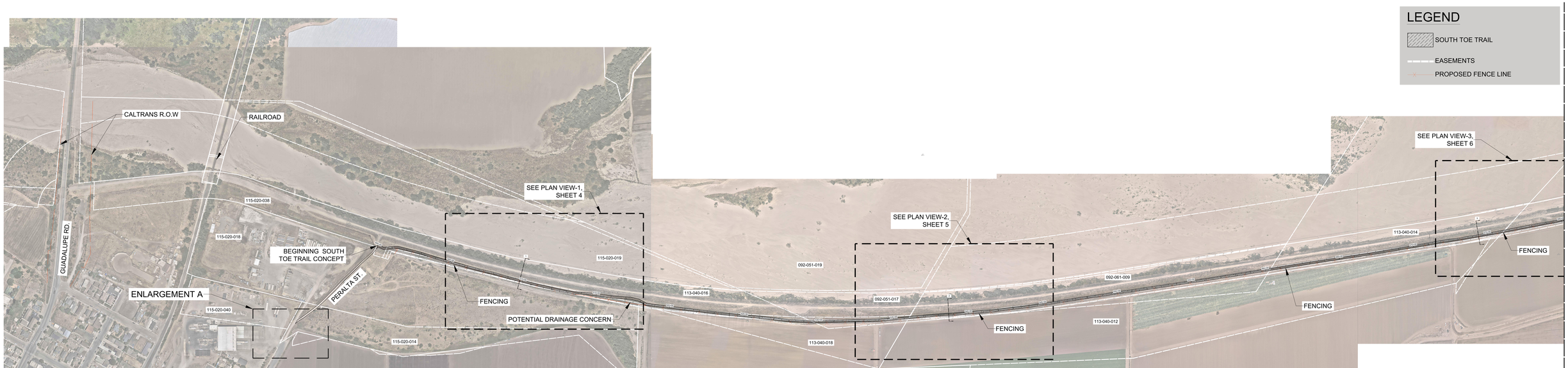

OVERALL SITE 1 OF 7

SANTA MARIA RIVER LEVEE TRAIL
SOUTH TOE TRAIL CONCEPT EXHIBIT
January 16, 2026

GRAPHIC SCALE
0 50 100 200
(IN FEET)
1 IN = 100 FT

WALLACE GROUP®

OVERALL SITE 2 OF 7

SANTA MARIA RIVER LEVEE TRAIL
SOUTH TOE TRAIL CONCEPT EXHIBIT
January 16, 2026

GRAPHIC SCALE
0 50 100 200
(IN FEET)
1 IN = 100 FT

WALLACE GROUP®

CROSS SECTION-1
~ STATION 503+00-TO-STATION 513+00

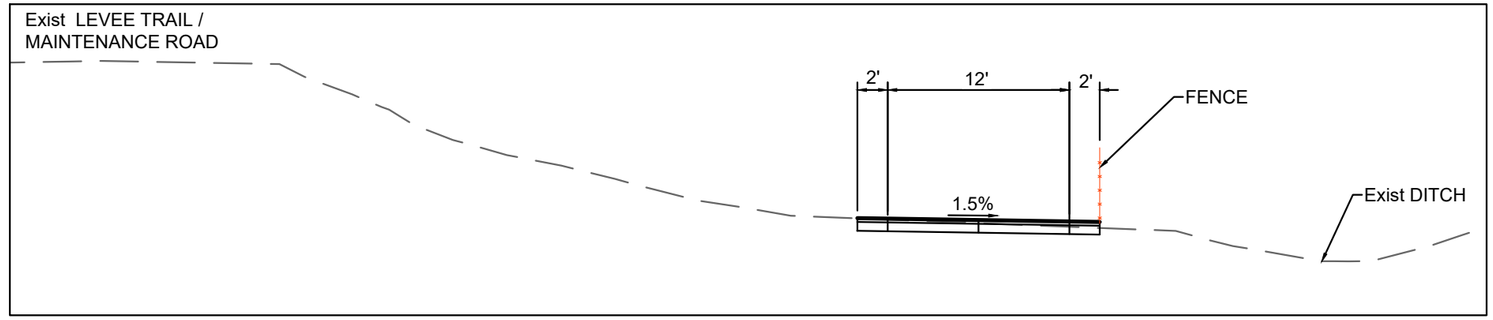

CROSS SECTION-2
~ STATION 533+00-TO-STATION 567+00

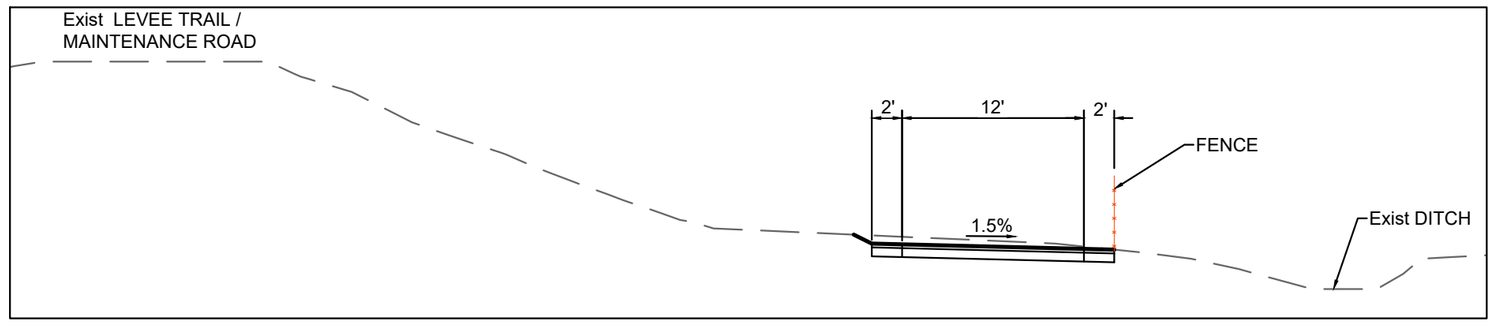

CROSS SECTION-3
~ STATION 567+00-TO-STATION 600+00

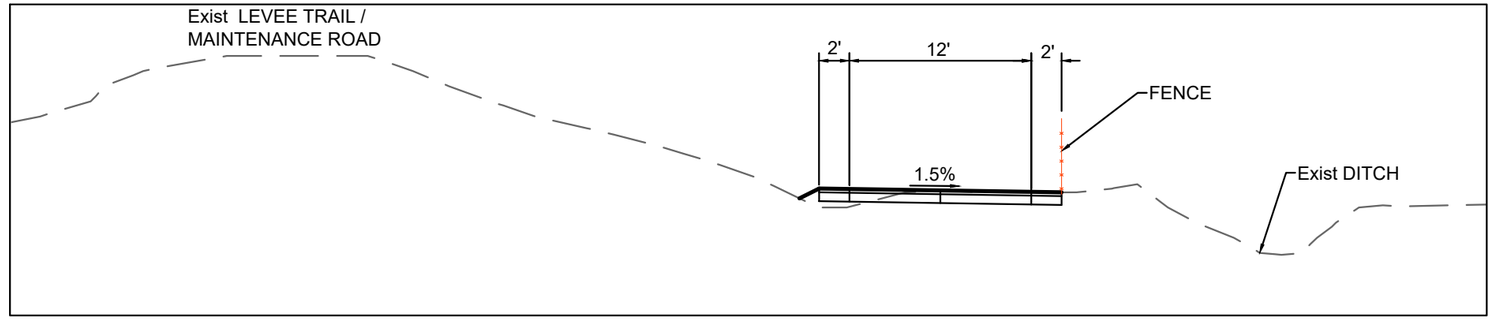

CROSS SECTION-4
~ STATION 606+00-TO-STATION 642+00

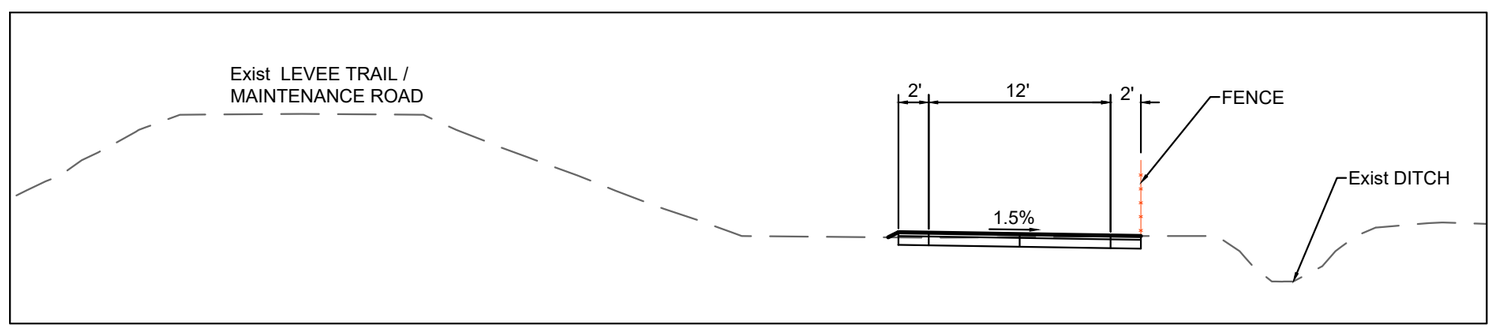

FILE NAME: 1105-0003-SOUTH-TOE.DWG 3/16/2026 2:13 PM

TYPICAL CROSS SECTIONS

SANTA MARIA RIVER LEVEE TRAIL
SOUTH TOE TRAIL CONCEPT EXHIBIT
March 16, 2026

GRAPHIC SCALE
0 5 10 20
(IN FEET)
1 IN = 10 FT

WALLACE GROUP®

FILE NAME: 1105-0003-SOUTH-TOE.DWG 1/16/2026 4:00 PM

PLAN VIEW-1

4 OF 7

SANTA MARIA RIVER LEVEE TRAIL

SOUTH TOE TRAIL CONCEPT EXHIBIT

January 16, 2026

GRAPHIC SCALE

0 5 10 20

(IN FEET)

1 IN = 10 FT

WALLACE GROUP®

FILE NAME: 1105-0003-SOUTH-TOE.DWG 1/16/2026 4:00 PM

PLAN VIEW-2

5 OF 7

SANTA MARIA RIVER LEVEE TRAIL

SOUTH TOE TRAIL CONCEPT EXHIBIT

January 16, 2026

GRAPHIC SCALE

0 5 10 20

(IN FEET)

1 IN = 10 FT

WALLACE GROUP®

FILE NAME: 1105-0003-SOUTH-TOE.DWG 1/16/2026 4:00 PM

PLAN VIEW-3

6 OF 7

SANTA MARIA RIVER LEVEE TRAIL

SOUTH TOE TRAIL CONCEPT EXHIBIT

January 16, 2026

GRAPHIC SCALE

0 5 10 20

(IN FEET)

1 IN = 10 FT

WALLACE GROUP®

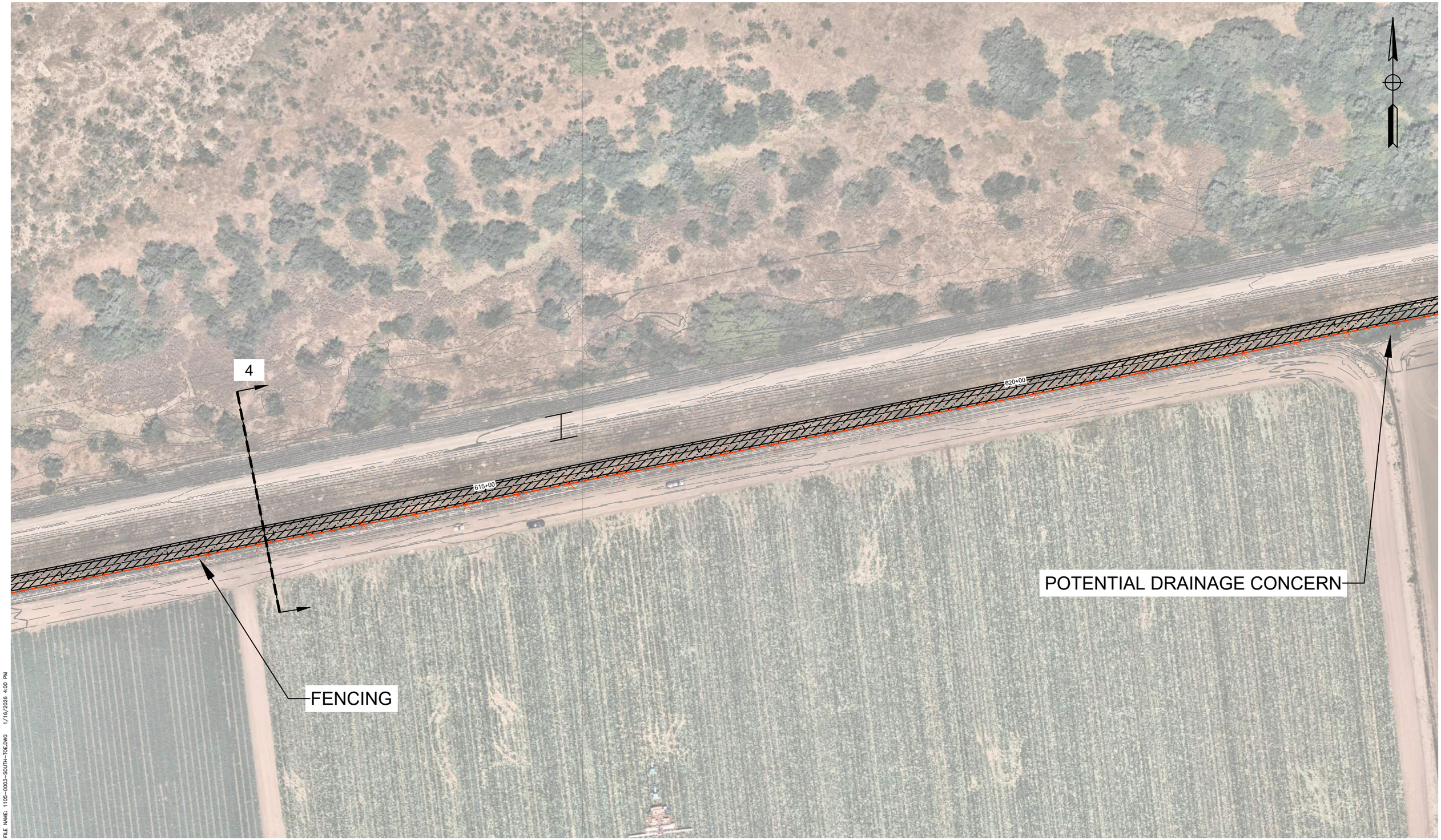

FILE NAME: 1105-0003-SOUTH-TOE.DWG 1/16/2026 4:00 PM

PLAN VIEW-4

7 OF 7

SANTA MARIA RIVER LEVEE TRAIL

SOUTH TOE TRAIL CONCEPT EXHIBIT

January 16, 2026

GRAPHIC SCALE

0 5 10 20

(IN FEET)

1 IN = 10 FT

WALLACE GROUP®

EMC PLANNING GROUP INC.
A LAND USE PLANNING & DESIGN FIRM
601 Abrego Street, Monterey,CA 93940
Tel: 831-649-1799 / Fax: 831-649-8399
www.emcplanning.com

To: **Kalani Durham, Engineering Environmental Planner/Coordinator, Public Works Department, Transportation Division, County of Santa Barbara**

From: **Teri Wissler Adam, EMC Planning Group**

Date: **March 24, 2026**

Re: **South Toe Trail Alternative Environmental Limitations/Constraints Memorandum, Santa Maria River Levee Trail Project**

Introduction

The purpose of this memorandum is to analyze the environmental limitations and constraints of an alternative alignment for the Santa Maria River Levee Trail. The South Toe Trail Alternative is only being considered from Bonita School Road to the City of Guadalupe, so this does not provide an accessible trail connect to the City of Santa Maria (South Toe Trail Alternative Engineering Constraints memo, Wallace Group, January 20, 2026) (pg. 1), and would also likely require fencing along the southern boundary adjacent to the active agricultural fields, to limit the impact to the agricultural operations (ibid, pg. 2). This alternative would include paving the trails and would also require altering the grading of the agricultural drainage ditches. Altering the grading of the drainage ditches to construct the trail and/or building a raised trail section could potentially cause drainage pattern changes including localized flooding issues in the fields or require extensive grading of the levee structure itself. Due to potential drainage and erosion concerns where the trail connects to the levee toe, construction of a small berm or shallow ditch may be recommended to prevent runoff from the levee slope from flowing onto the trail. However, incorporating a berm or ditch could introduce ongoing maintenance considerations.

MEMORANDUM

Biological Resources Constraints

Previous Biological Survey and Report

The *Santa Maria River Levee Trail Project Biological Assessment* was prepared to analyze potential impacts to biological resources as a result of construction/use of the Santa Maria River levee trail ("biological assessment", EMC Planning Group 2025). EMC Planning Group senior biologist Patrick Furtado, MS, conducted a reconnaissance-level biological survey of the project site on July 16, 2024. The Biological Survey Area (BSA) included the proposed levee trail alignment plus a 50-foot buffer on both sides of the alignment. Although the field survey did not include the southern toe of the slope specifically, an assessment of potential biological constraints can be completed.

Several plant communities were identified along the southern toe of the slope: ruderal/disturbed, agricultural, and freshwater emergent wetland vegetation within the agricultural drainages. Mitigation measures were included in the biological assessment to avoid, minimize and/or mitigate for potential impacts to the plant and wildlife species potentially occurring along the toe of slope:

Plants

- Blochman's leafy daisy (*Erigeron blochmaniae*), CNPS List 1B.2;
- Kellogg's horkelia (*Horkelia cuneata* ssp. *sericea*), CNPS List 1B.1.

Wildlife

- Arroyo toad (*Bufo californicus*), federally endangered, state species of special concern;
- California red-legged frog (*Rana draytonii*), federally threatened, state species of special concern;
- Western spadefoot (*Spea hammondii*), proposed federal listing as threatened, state species of special concern;
- Coast horned lizard (*Phrynosoma blainvillii*), state species of special concern;
- Northern California legless lizard (*Anniella pulchra*), state species of special concern;
- Southwestern pond turtle (*Actinemys pallida*), proposed federal listing as threatened, state species of special concern;
- Least Bell's vireo (*Vireo bellii pusillus*), federally endangered, state endangered;

- Southwestern willow flycatcher (*Empidonax traillii eximus*), federally endangered, state endangered;
- Burrowing owl (*Athene cunicularia*), state species of special concern, proposed state listing as threatened;
- Yellow warbler (*Setophaga petechia*), state species of special concern;
- American badger (*Taxidea taxus*), state species of special concern;
- state species of special concern bats; and
- protected nesting birds.

Several types of wetlands within and adjacent to the levee trail were noted during the reconnaissance-level survey, including the Santa Maria River to the north and agricultural ponds and drainages to the south. Impacts to jurisdictional aquatic features within the Ordinary High Water Mark are regulated by the U.S. Army Corps of Engineers. Impacts to areas within the top of bank are regulated by the Regional Water Quality Control Board. Impacts to the riparian corridor are regulated by the California Department of Fish and Wildlife. The biological assessment included measures requiring a jurisdictional delineation of aquatic features that may be impacted by the proposed project, mitigation for temporary or permanent impacts to wetland or riparian vegetation, and measures for water quality protection.

Environmental Setting Along the Toe of Slope

Based on a review of aerial photographs, the biological assessment and the plans for the south toe alternative, the alternative would impact ruderal/disturbed vegetation, agricultural lands, and an agricultural drainage channel likely considered jurisdictional due to its connection with the Santa Maria River between Peralta Street and the railroad crossing. Freshwater marsh vegetation is visible within the drainage channel on aerial photographs; however, it is likely that vegetation is regularly removed or sprayed to maintain functionality as agricultural drainage.

Constraints

The south toe alternative is located approximately 200 feet from the Santa Maria River as opposed to immediately adjacent, which would reduce the potential for impacts to riparian vegetation and the species dependent on that vegetation type. A Streambed Alteration Agreement from the California Department of Fish and Wildlife would not likely be needed for this portion of the alignment. However, measures for the protection of the special-status plants and wildlife identified in the biological assessment would still be relevant and necessary for the alternative alignment. For example, construction activities within 500 feet of riparian vegetation considered least Bell's vireo

habitat are considered impacts requiring timing to occur outside of the breeding season or Incidental Take Authorization to proceed.

Although impacts to riparian vegetation may be avoided, the extent of impacts to jurisdictional features would increase if the agricultural drainage along the toe of slope requires relocation or compensatory mitigation offsite. Anticipated permits include a Section 404 Nationwide Permit 14 for linear transportation projects, which limits impacts to no greater than ½-acre. If impacts will be greater than ½-acre an individual permit may be needed. Restoration and/or compensatory mitigation would be required for temporary or permanent impacts. Similarly, the Regional Water Quality Control Board would require a Water Quality Certification for the loss state-jurisdictional waters with restoration and/or compensatory mitigation for temporary or permanent impacts.

Costs

A Streambed Alteration Agreement from the California Department of Fish and Wildlife would likely not be required for impacts to riparian vegetation, saving the cost of permit fees and time/cost of application preparation and agency consultation. However, impacts to federally- and state-jurisdictional waterways would increase and likely negate any cost savings. Species-specific mitigation measures identified in the biological assessment would still apply to the south toe alternative, and would not result any change to the costs of biological mitigation compliance.

Wallace Group included preliminary calculations of the area of waterways that would be impacted by the south toe alignment in the Alternative Engineering Constraints Memo (2025). If a width of approximately 20 feet and a length of three miles is assumed, the area impacted by the south toe trail would be approximately 320,000 square feet. Assuming a 2:1 mitigation ratio, this would require approximately 640,000 square feet or 14.7 acres of mitigation planting. There is insufficient space available on site for this mitigation planting, so a dedicated area would need to be identified offsite. A preliminary estimate for the cost of mitigation has been estimated at least $400,000. This includes surveys and mapping, planting, fencing and signage, maintenance, and project management, but does not include the cost of purchase of land or a conservation easement.

Conclusion

The south toe alternative does not provide a biologically superior alternative to the proposed Santa Maria River Levee Trail project.

Agricultural Resources

The south toe alternative alignment would be approximately 50 feet closer and near the edge of existing, active agricultural fields to the south. This would exacerbate the impacts presented in

Section 5.0, Agricultural Resources, in the draft EIR associated with potential conflicts between trail users and agricultural production activities. Therefore, the impact would be somewhat greater than with the proposed project.

Cultural Resources

According to the South Toe Trail Alternative Engineering Constraints memorandum, Wallace Group, January 20, 2026 (pg. 4), moving the trail alignment from a uniform location along the top of the levee to a transition to the toe of the levee could introduce variations and associated grading against the existing levee as drainages are crossed.

The increase in ground disturbance would increase the potential for accidentally impacting historic or unique archaeological resources, should they be present in the alternative alignment area. Therefore, the impact would be somewhat greater than with the proposed project.

Air Quality/Greenhouse Gas Emissions

According to the South Toe Trail Alternative Engineering Constraints memorandum, Wallace Group, January 20, 2026 (pg. 4), moving the trail alignment from a uniform location along the top of the levee to a transition to the toe of the levee could introduce variations and associated grading against the existing levee as drainages are crossed.

Additional earth moving activities would result in an increase in construction-related air quality and greenhouse gas emissions. Therefore, the impact would be somewhat greater than with the proposed project.