California Department of Transportation

DISTRICT 11
4050 TAYLOR STREET, MS-240
SAN DIEGO, CA 92110
(619) 985-1587 | FAX (619) 688-4299 TTY 711
www.dot.ca.gov

December 18, 2025

11-IMP-86
PM 4.5
McCabe Ranch II Tract Map 994
Supplemental EIR (SCH#2024050879)

Mr. David Black
Planner IV
Imperial County Planning & Development Services Department
801 Mian Street
El Centro, CA 92243

Dear Mr. Black:

Thank you for including the California Department of Transportation (Caltrans) in the environmental review process for the Supplemental EIR (SEIR) (SCH#2024050879) for the McCabe Ranch II TM 994 Project located near State Route 86 (SR-86). The mission of Caltrans is to provide a safe and reliable transportation network that serves all people and respects the environment. The Local Development Review (LDR) Program reviews land use projects and plans to ensure consistency with our mission and state planning priorities.

Safety is one of Caltrans' strategic goals. Caltrans strives to make the year 2050 the first year without a single death or serious injury on California's roads. We are striving for more equitable outcomes for the transportation network's diverse users. To achieve these ambitious goals, we will pursue meaningful collaboration with our partners. We encourage the implementation of new technologies, innovations, and best practices that will enhance the safety on the transportation network. These pursuits are both ambitious and urgent, and their accomplishment involves a focused departure from the status quo as we continue to institutionalize safety in all our work.

Caltrans is committed to prioritizing projects that are equitable and provide meaningful benefits to historically underserved communities, to ultimately improve transportation accessibility and quality of life for people in the communities we serve.

We look forward to working with Imperial County in areas where the County and Caltrans have joint jurisdiction to improve the transportation network and connections between various modes of travel, with the goal of improving the experience of those who use the transportation system.

Caltrans has the following comments:

Traffic Engineering and Analysis

The Draft Supplemental EIR, Section 4.10.6.2 (comment 1 to 4): MM TR-2 "Project Phase 2 Improvements", Street Segments, MM TR-2.5 SR-86 between McCabe Road and Heber Road (Caltrans jurisdiction) states:

> *Provide right-of-way to six-lane Prime Arterial standards and construct improvements to four-lane Minor Arterial standards for the portion fronting the Project site. This four-lane configuration would allow the roadway to operate at acceptable levels given its LOS E capacity of 37,000 vehicles per day.*

Constructing only the portion fronting the project site will create a bottleneck over the short distance from four to two lanes at the SR-86/McCabe Road signalized intersection. This could create merging conflicts. The intersection should be improved to avoid creating traffic operations and safety issues.

MM TR-4.11: W McCabe Road / SR-86 (Intersection 21) (Caltrans jurisdiction) pdf page 389, states:

> *Contribute a fair share of 86.1% towards provision of the following improvements: Northbound: one left-turn lane, one through lane, and one right-turn lane Southbound: one left-turn lane, one through lane, and one right-turn lane Eastbound: one left-turn lane, one through lane, and one right-turn lane Westbound: one left-turn lane, one through lane, and one right-turn lane.*

Please improve the SR-86 and McCabe Road intersection instead of contributing a fair share to avoid creating a traffic operation and safety issue.

MM TR-1.6: Heber Road/Dogwood Road (Intersection 35) (Caltrans jurisdiction) states:

> *Contribute a fair share (8.0%) towards signalization of this intersection to ensure the following improvements: Northbound: one left-turn lane, two through lanes, and one right-turn lane Southbound: one left-turn lane, two through lanes, and one right-turn lane Eastbound: one left-turn lane, one through lane, and one right-turn lane Westbound: one left-turn lane, one through lane, and one right-turn lane.*

Per the Local Transportation Analysis, Table 5-1 "Existing Intersection Operation" shows intersections within Caltrans are at the acceptable LOS. However, Table 8-1 "Year 2027+Project Phase 1 Intersection Operations" shows intersection 35 Heber Rd/Dogwood Road degraded to LOS F and E during the AM/PM peaks.

Per section 4.5 Level of Service Standards, paragraph 3 states: "if the project causes the operation to degrade to an unacceptable level, then the project would be responsible for constructing the necessary improvements". The project does cause the operation to degrade to an unacceptable level at the Heber Road and Dogwood Road intersection. Therefore, this is a direct impact, please provide off-site mitigation for each phase from 1 to 4 as the Project develops. Degraded LOS conditions are shown on Tables 8-3 and 8-5 for other phases.

MM TR-3.6: McCabe Road between SR-86 and Farnsworth Lane states:

> *Provide right-of-way to six- lane Prime Arterial standards and construct improvements for four-lane Minor Arterial standards for the portion fronting the Project site. This configuration would allow the roadway to operate at acceptable levels given its LOS E capacity of 37,000 vehicles per day. For the off-site portion, construct improvements for four-lane Minor Arterial standards.*

Similar to the first comment, the proposal of constructing only the portion fronting the project site will create a bottleneck from four to two lanes at the SR-86/McCabe Road signalized intersection. This could create merging conflicts. Please improve the intersection to avoid creating traffic operation and safety issues.

The Local Mobility Analysis dated October 9, 2025: Table 8-7 "Year 2040+Phase 1,2,3,4 Intersection Operations" shows that the additional project trips degraded the SR-86 and McCabe Road intersection (Intersection 21) from LOS C to an unacceptable LOS F. This is also a project direct impact per Section 4.5 Level of Service Standards. Please provide mitigation to bring the intersection LOS back to an acceptable LOS.

It is recommended to provide a left turn lane for the proposed Driveway B and D along southbound SR-86 to avoid potential conflicts for the proposed project left turn movement.

This comment has not been addressed from the previous letter. Safety is Caltrans' number one goal. Caltrans Director Policy (DP) 36 "Road Safety" has been approved and implemented on February 15, 2022. The intent of this policy is to establish a corporate expectation that prioritizes safety in order to achieve Vision Zero's goal of eliminating fatalities and serious injuries on California roadways by 2050 and provide safer outcomes for all communities. All projects on the State Highway System shall prioritize and implement the safe system approach to eliminate fatal and injuries for all road users. An Intersection Safety and Operational Assessment Process (ISOAP) Report will be required at any intersection where the intersection control is being proposed to change (i.e., signalized), added a vehicular lane other than striping, and other criteria. An ISOAP report is required for the following intersections:

- SR-86/McCabe intersection
- New Driveway B
- New Driveway D (future Main Entry Parkway).

In the existing conditions at SR-86 (Heber Rd) / Dogwood Rd there's no right-turn pocket. Please revise the synchro files to show the current existing conditions at the SR-86 (Heber Rd)/Dogwood Rd intersection.

All designs within Caltrans' ROW shall comply with the latest Highway Design Manual, Director's Policy 36 (DP-36) on Road User Safety, and Director's Policy 37 (DP-37) on Complete Streets.

The County's Long Range Transportation Plan (LRTP) future road network identifies SR-86 as 6-lane Prime Arterial classification. Intersections and streets within Caltrans' Right of Way (R/W)

that are built to the ultimate classification, Caltrans accepts Right of Way dedication for roadway improvements. Therefore, it is necessary to determine proper mitigation for all and each development to improve the project's deficiency to Caltrans' goals and standards.

Please include the signal timing sheets in the Local Mobility Analysis for all intersections within Caltrans' R/W.

Design

The McCabe Ranch II Tract Map 994 Project causes operations to degrade at the intersection of SR-86 (Heber Rd) and Dogwood Rd. This is a direct impact to the intersection. The project proponent needs to mitigate and work closely with Caltrans to address impacts to this intersection due to this development project.

Caltrans District 11 project 1100000384 (EA 11-29420) will widen and install traffic signals at the SR-86 (Heber Rd) and Dogwood Rd intersection (below please find a snapshot of the proposed lane configuration at this intersection). It should be noted that this is a Permit Project whose improvements are part of the Mitigation Measures of the Imperial Valley Mall, Imperial Valley Commons, and the Plaza at Imperial Valley.

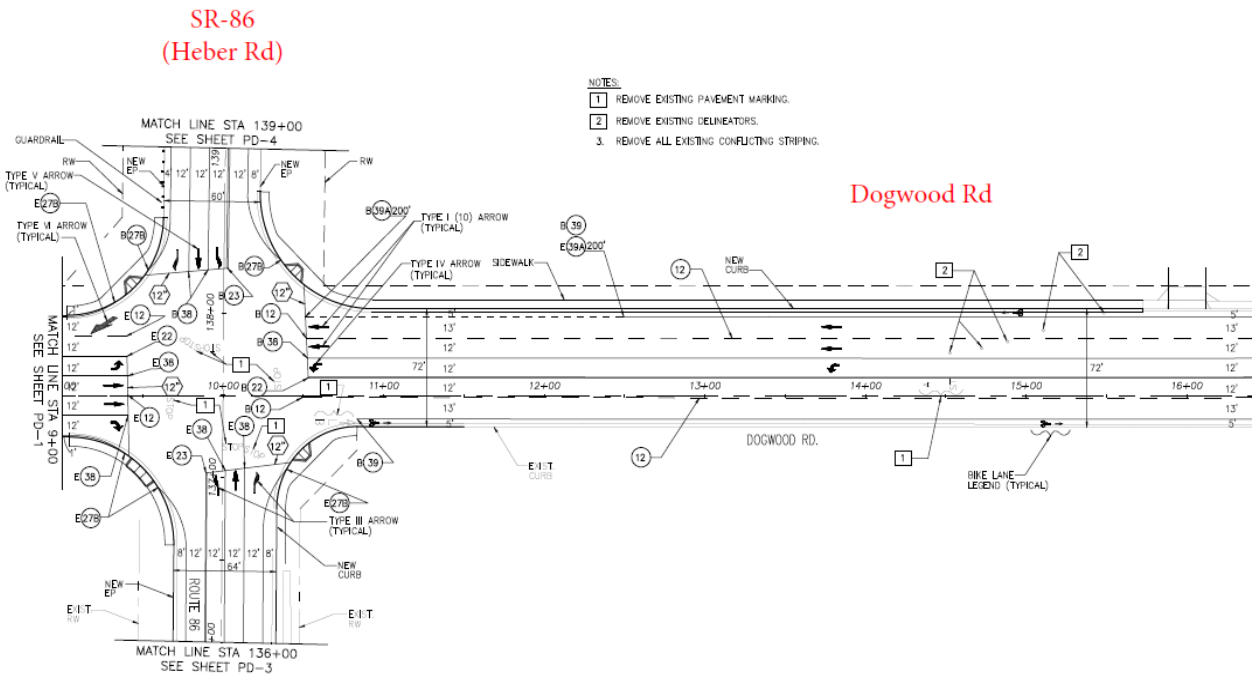

Source: Preliminary Project Plans (Caltrans Project ID 1100000384 – EA 11-29420).

The following is the proposed lane configuration of Caltrans Project ID 1100000384 (EA 11-29420) at the SR-86 (Heber Rd)/Dogwood Road intersection:

- Northbound (Dogwood Rd): one left-turn lane, two through lanes, and one right-turn lane
- Southbound (Dogwood Rd): one left-turn lane, and two through lanes
- Eastbound (SR-86): one left-turn lane, one trough lane, and one right-turn lane
- Westbound (SR-86): one left-turn lane, one through lane, one right-turn lane

Page 4.10.47 of the Draft Supplemental Environmental Impact Report of the McCabe Ranch II Tract Map 994 project (Section 4.10.6.2. "New Proposed Mitigation Measures" -MM TR.1: Project Phase 1 Improvements) recommends signalization of the Heber Road / Dogwood Road intersection. It also proposes similar lane configuration improvements as those proposed by Caltrans Project ID 1100000384 (EA 11-29420) with the exception that McCabe Ranch II Tract Map 994 Project recommends one southbound right-turn lane, while Caltrans project does not.

Some tables of the Draft Supplemental Impact Report of the McCabe Ranch II Tract Map 994 refer to the Heber Road / Dogwood Road intersection as "Intersection 35" whereas Table 4.10-15 and Section 4.10.6.2 refer to it as "Intersection 36."
All designs within Caltrans' R/W shall comply with the latest Highway Design Manual (HDM) per DP-36, and Director's Policy 37 (DP-37) on complete streets.

- Please provide the necessary R/W on SR-86 for a left turn pocket (6'), three lanes (12' each), a shoulder (8'), a bike lane (8'), a sidewalk (6'), and curb & gutter (1.5'). That will sum up to 65.5' from center line of roadway.
- Please calculate queue length for through and left turn lane per signal time.
- Please consider pedestrian volume and design pedestrian crossings accordingly.
- Please design all components on SR-86 per the latest HDM as mentioned below:
    - HDM Topic 205 – Road Connections and Driveways (Access openings should not be spaced closer than one-half mile to an adjacent public road intersection or to another private access opening that is wider than 30 feet).
    - HDM Topic 309 – Clearances
    - HDM Topic 404, 404.5 Truck Turning Templates
    - HDM Topic 4.5 Intersection design

Hydrology and Drainage Studies
In Appendix J (Tentative Map): please show cross sections and details for the proposed driveways at Caltrans' R/W.

There are existing earthen ditches that parallel SR-86 which collect pavement runoff. Please explain in what ways will the drainage ditches be impacted due to the proposed development and how will those impacts be mitigated.

The following comments were previously submitted to the applicant in a Caltrans comment letter dated September 29, 2025, but have not yet been addressed by the applicant. Please see the unaddressed comments below:

- Please provide hydraulics studies, drainage, and grading plans to Caltrans for review.

- Please provide a hydraulics and hydrology study that shows both pre- and post-developments flow rates. Show drainage configurations and patterns.
- Please provide drainage plans and details. Include retention or detention basin details of inlets/outlets.
- Please provide a contour grading plan with legible callouts and minimal building data. Show drainage patterns.
- On all plans, show Caltrans' R/W and SR-86 alignment.
- Early coordination with Caltrans Hydraulics Branch is recommended.
- Caltrans generally does not allow development projects to impact hydraulics within the State's R/W. Any modification to the existing Caltrans drainage and/ or increase in runoff to State facilities will not be allowed.

Responses to the comments made on September 29, 2025, have not been received and therefore, the project has the potential to impact State Facilities. To date, Caltrans has not received the required and requested studies to determine impact, therefore Caltrans assumes the project has an adverse impact on State facilities.

Complete Streets and Mobility Network
Caltrans recognizes that walking, biking, transit, and passenger rail are integral to our vision of delivering a brighter future for all through a world-class transportation network. Additionally, Caltrans recognizes that streets are not only used for transportation but are also valuable community spaces. Accordingly, in locations with current and/or future pedestrian, bicycle, or transit needs, all transportation projects funded or overseen by Caltrans will provide comfortable, convenient, and connected complete streets facilities for people walking, biking, and taking transit or passenger rail.

The segment of SR-86 adjacent to the project area has been identified as a District 11 Caltrans Active Transportation Plan tier 1 need for bicycle and pedestrian infrastructure. Accordingly, please work with Caltrans District 11 including the Complete Streets Program to explore options for comfortable, convenient, and connected bicycle and pedestrian facilities along this segment of SR-86. Caltrans recommends that the applicant dedicates space for a future Class II bikeway and sidewalks per Caltrans design standards. Recommending at a minimum 18 feet dedication for bikeway and sidewalks, this includes 6-foot minimum bikeway in each direction and 6-foot sidewalk or to Caltrans standard along the frontage of the development, eastside of SR-86.

The proposed Caltrans' bicycle and pedestrian improvements will provide connectivity to the Active Transportation improvements proposed in the County of Imperial's 2019 Active Transportation Plan, the 2021 County of Imperial's Pedestrian Master Plan and the Imperial County Transportation Commission's 2022 Regional Active Transportation Plan and the 2024 Regional Long Range Transportation Plan.

In relation to transit, there are currently no proposed transit routes along SR-86 between McCabe Road and Correll Road; however, the Imperial Valley Transit routes 1N and 1S currently operate along a portion of SR-86 and Dogwood Road along the eastern boundary of the project area. It is recommended that consideration is made to reach out to the Imperial

County Transportation Commission regarding future transit needs along the western side of the McCabe Ranch Specific Plan project area.

Right-of-Way
The applicant will need to submit any documentation related to the existing Right of Way on SR-86 along the project frontage (if any). Caltrans would like to know how the applicant has determined the Easterly R/W of SR-86? Is there an existing easement document? If so, please provide it to Caltrans for review. If not, Caltrans would require a dedication on the map to perfect Caltrans' rights.

As a condition of approval, it would be asked that the developer donate the required R/W according to Caltrans' standards and prepare a Right of Way Map depicting the dedication (see attachments, I0860401 Right-of-Way Map, I0860402 Right-of-Way Map, and Dedication Process per Right-of-Way Manual Chapter 6.20.00).

Per Business and Profession Code 8771, perpetuation of survey monuments by a licensed land surveyor is required, if they are being destroyed by any construction.

Any work performed within Caltrans' R/W will require discretionary review and approval by Caltrans and an encroachment permit will be required for any work within the Caltrans' R/W prior to construction.

Additional information regarding encroachment permits may be obtained by visiting the website at https://dot.ca.gov/programs/traffic-operations/ep. Projects with the following:

- require a Caltrans Encroachment Permit
- have completed the Caltrans Local Development Review (LDR) process
- have an approved environmental document

need to have documents submitted for Quality Management Assessment Process (QMAP) process via email to D11.QMAP.Permits@dot.ca.gov. Early coordination with Caltrans is strongly advised for all encroachment permits.

If you have any questions or concerns, please contact Charlie Lecourtois, LDR Coordinator, at (619) 985-4766 or by e-mail sent to Charlie.Lecourtois@dot.ca.gov.

Sincerely,

Kimberly D. Dodson

KIMBERLY D. DODSON, GISP
Branch Chief
Local Development Review

Attachments:

1. I0860401 Right-of-Way Map
2. I0860402 Right of Way Map
3. Dedication process per R/W manual Chapter 6.20.00

01425

FED. ROAD DIST. NO.	STATE	PROJ. NO	FISCAL YEAR	SHEET NO.	TOTAL SHEETS
2	CAL.				

T.16S., R 14E., 6.B.B.&M

DIST.	COUNTY	ROUTE	SEC.	SHEET NO.	TOTAL SHEETS
~~XI~~	~~IMP~~	~~26~~	~~J~~	18	22
XI	IMP	86		PM 4.2	

D. C. Delong
DISTRICT R/W ENGINEER, DISTRICT 11

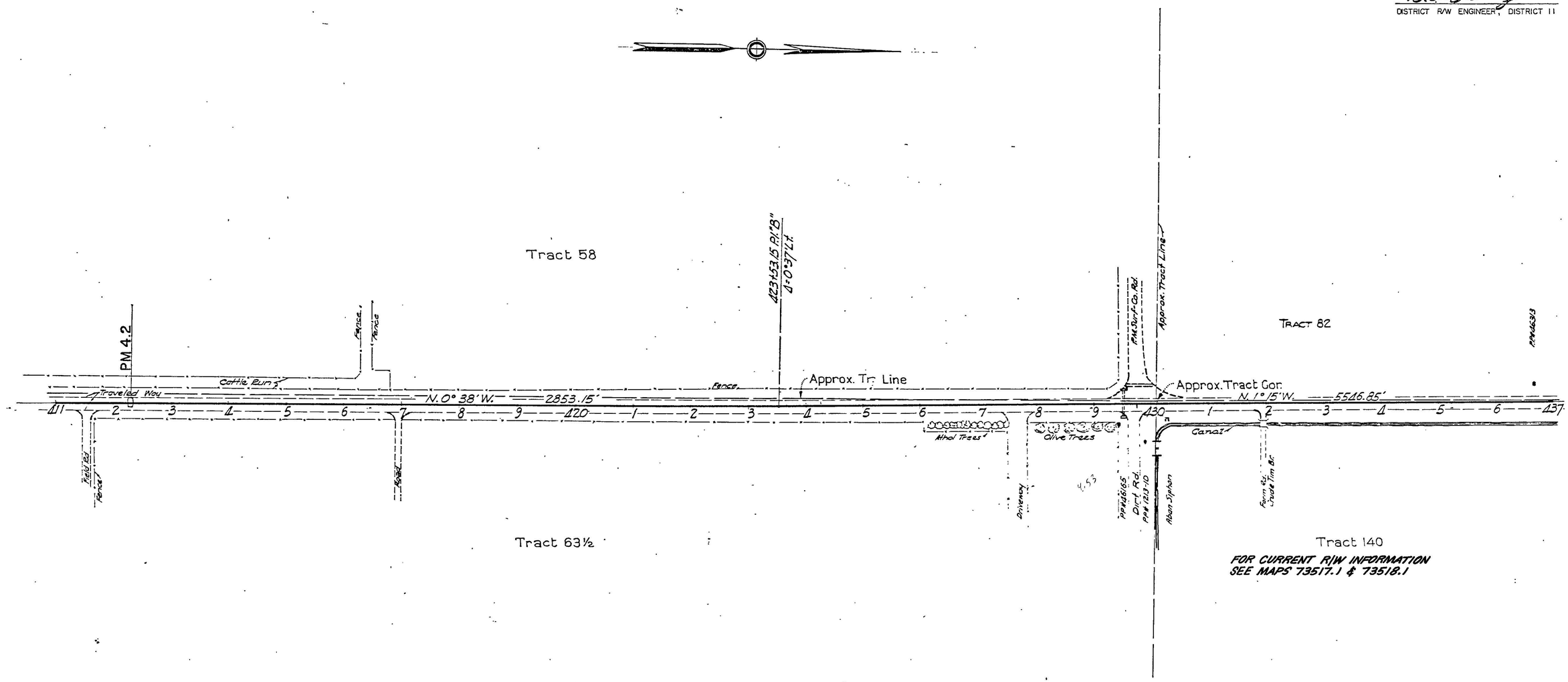

PAR. NO.	GRANTOR	TYPE INST.	DATE SIGNED	RECORDED DATE	RECORDED BOOK	RECORDED PAGE	R/W FILE	REMARKS

DATE RELEASED
DEC 13 1966
REVISED

Excess Reviewed
By R&E Date 11-30-71

RIGHT OF WAY MAP

SCALE 1" = 100'

I0860401.tif 12-20-99

I0773517
XI-IMP-86, PM4.2
~~XI-IMP-26-J~~ 18-22

R/W Dec. '45 W.N.W.
I0860401.TIF

~~XI-IMP-26~~-J 5.1

AUN

BPR REG. NO.	STATE	FEDERAL PROJECT NO.
7	CALIF.	

J.T. Lee 7/5/94
DISTRICT 11 RIGHT OF WAY ENGINEER.

COUNTY OF IMPERIAL

T. 16 S. R. 14 E. S. B. B. & M.

ACCORDING TO U.S. GOVERNMENT SURVEY APPROVED FEB. 6, 1909

FOR THIS AREA SEE MAP 73517

FOR THIS AREA SEE MAP 73518.1

E 6776000

SECTION 18

EAST 1/2 TRACT 58

CULTIVATED FIELDS

NOTE: EXISTING R/W ALONG WESTERLY SIDE OF 11-IMP-86 IS BY IMPLIED DEDICATION WAS LOCATED PER FIELD SURVEY NO. SR 3-121 DATED: 04-20-93

PM 3-50

NORTHEAST CORNER TRACT 53

200+00.00 "A" LINE 65.00' LT. N 1,852,391.52 E 6,776,231.38

JOIN EXIST.

N.00°54'00"W. 3998.05'

1½" PIPE W/TAG RCE 13484 PER PARCEL MAP 3-50 N 1,848,396.12 E 6,776,416.99

N.01°03'13"W. 761.39'

207+61.95 "A" LINE 65.00' LT.

30050

PREVIOUS R/W 761.52'

UNDERLYING FEE AREA = 48868 SQ. FT.

N01°03'13"W 761.67'

ROUTE 86

N.00°54'00"W. 1281.64' 5279.69'

(N.00°29'32"W. 5279.53' PM 3-50)

APPROXIMATE LOCATION OF EXISTING R/W (EASTERLY R/W DETERMINED BY SCALING ORTHOPHOTO)

207+61.67 ANGLE POINT "A" LINE

NOTE: "A" LINE IS THE PROPOSED CENTERLINE OF CONSTRUCTION PER DESIGN TRAVERSE DATED: 01-25-94

58 | 82 | 63½ | 140

CALC'D POSITION TRACT CORNER N 1,854,274.16 E 6,776,334.06

211+50.00 "A" LINE 65.00' LT.

N.01°33'01"W. 388.05'

SEE DETAIL

EXIST. P.P.

11433 NOT A PART OF JUA

30051

P.M. 4.5

N.01°33'01"W. 1738.33'

10.00'

N.01°27'10"W. 2268.06'

EXIST. DOGWOOD LATERAL 2:

CALC'D POSITION TRACT CORNER N 1,854,274.16 E 6,776,334.06

80d SPIKE PER PARCEL MAP 6-91 N 1,854,274.22 E 6,776,344.06

EXISTING DRIVEWAY

RS 2-3

1½" PIPE W/BRASS TAG RCE 31921 PER PARCEL MAP 6-91 N 1,854,279.85 E 6,777,199.10

PM 3-37

PM 6-91

TRACT 140

60' WIDE ROAD EASEMENT DOC. 679 / 366 REC. 05-13-1947

PM 2-90

20d SPIKE SET BY COUNTY SURVEYOR OVER IMPERIAL COUNTY IRR. DIST. CONC. CYL. PER I.C. PIE CARD. SEE PARCEL MAP NO. 6-91 & 2-90. N 1,854,291.48 E 6,778,964.16

N 1854000

EXIST. P.P.

SOUTHWEST CORNER TRACT 82.

EXISTING 40.00' R/W ALONG McCABE RD BY IMPLIED DEDICATION PER FIELD SURVEY NO. SR3-121 DATED: 04-20-93

TRACT 82

℄ EXISTING POLE LINE

℄ POLE LINE ESMT. BOOK 476, PAGE 366

RS 6-12

80d SPIKE SET BY COUNTY SURVEYOR OVER IMPERIAL COUNTY IRR. DIST. CONC. CYL. PER ROS. 6-12. SEE ALSO PARCEL MAP NO. 1-15 N 1,854,256.22 E. 6,775,693.97

TRACT LINE

2640.15' (N89°36'38"E. 2640.16') ROS 6-12

128.22' LT. 212+98.85 "A" LINE 40.00' LT. 10+70.00 "MW" LINE

10+00.00 "MW" LINE

OVERHEAD ELECTRIC JUA 29459 – 1 TO: IMP. IRRIGATION DIST. REC.: 8-23-2011 DOC. #2011-020377

131.63' LT. 212+18.99 "A" LINE 40.00' RT. 10+70.00 "MW" LINE

N.89°49'35"W. 15.00'

S.89°49'35"E. 30.00'

N.00°10'25"E. 80.00'

212+98.50 "A" LINE 114.23' LT.

213+19.25 "A" LINE 64.50' LT. N 1,854,309.89 E 6,776,262.80

212+18.08 "A" LINE 101.65' LT. N 1,854,207.76 E 6,776,228.41

S.29°50'33"E. 71.30'

N.65°47'25"E. 53.80'

N.03°01'30"E. 36.41'

N.01°33'01"W. 1124.52'

"MW" Line 200.49' S.89°49'35"E.

133.45'

PT "A"

212+48.86 "A" = 10+00.00 "ME"

212+55.04 "A" = 12+00.49 "MW"

NOTE: "ME" & "MW" LINES ARE ℄ CONST. PER DESIGN TRAVERSE DATED: 01-25-94

241.47' "ME" Line

McCABE

N89°51'28"E.

EXIST. HOUSE

12+41.47 END "ME" LINE

EXIST. DRIVEWAY

1765.10' (N89°39'45"W. 1765.11')

N89°51'27"W. (N.89°37'22"E.)

2630.01' PM 2.80' 2630.16'

2630.11' PM 3.37'

2640.11'

N 1853000

N 1853500

E 6776500

DETAIL
NO SCALE

30050

JOIN EXIST. R/W

PREVIOUS R/W

S.88°36'47"W. 62.82'

31.00'

31.82'

3998.05' TRACT LINE

3.18'

761.67'

N.01°03'13"W.

200+00.00 BEGIN "A" LINE

DETAIL
NO SCALE

TRACT LINE

JOIN EXIST. R/W

PT "A"

5.39'

14.61'

2.00' 20.00' 2.00' 20.00'

N.00°10'25"E. 80.00'

30.00'

S.89°49'35"E. 43.10'

S.89°49'35"E. 39.19'

11+09.19 "MW" LINE 20.00' LT. N 1,854,267.73 E 6,776,231.78

S.89°36'38"W. 64.21'

77.32'

30050

2.11+82.68 "A" LINE 34.00' LT.

R=55.00' Δ=49°38'16" L=47.63'

11+13.70 "MW" LINE 20.00' RT. N 1,854,221.72 E 6,776,242.17

S.26°52'52"E. (RAD)

A=55.00' Δ=91°43'26" L=88.05'

30051

11.24'

Δ=64°20'09" L=82.74'

R=55.00' Δ=27°03'17" L=25.97'

213+32.75 "A" LINE 34.00' LT.

S/E COR TRACT 82

PARCEL NUMBER	VESTEE	①AREAS (SQ. FT. & NOTED) R/W	EXC. ②	REM. ②	TYPE	RECORDED DATE	INST. NO.
30050	HOFER	0.93 AC.		196.57 AC.	F	09-13-95	020101
30051	KLINE	0.76 AC.		157.44 AC.	F	3-20-96	005972

PM 1-15

TRACT 63½

FOR PREVIOUS R/W INFORMATION SEE MAP 73517 & 73518

NOTES
FOR FOUND MONUMENTS: SEE PROP. RETRACEMENT SURVEY MAP NO. *
FOR HIGHWAY MONUMENTS: SEE MAP NO. *
* COUNTY ENG. MAP NO.
MAP DATA SHOWN IS ON CALIF. COORD. SYS. OF 1983 ZONE 6. DIST. X 0.9999918 EQUALS GROUND LEVEL DISTANCES

LEGEND
ACCESS DENIED
ACCESS OPENING
( ) PREVIOUS RECORD DATA
① EXCLUDES EXIST. ST.
② INCLUDES EASE. TAKE

STATE OF CALIFORNIA
DEPARTMENT OF TRANSPORTATION
DISTRICT 11

RIGHT OF WAY MAP NO.	73517.1		
COUNTY	ROUTE	POST MILES	SCALE
IMP	86	4.3-4.5	0 50'
			SHEET 1 OF 2

REVISIONS	DATE	BY	DESCRIPTION

PROJECT ENGINEER	DATE RELEASED
C. ANDERS	

Scanned 6/21/2005

P.M. LIMITS: 4.2 - 4.8

PROJECT E.A.: 149101 I0860402.TIF

Dedication requirements for RWE

6.20.01.00 General

A dedication is the setting aside of real property (in fee or easement) for public use without compensation, typically as a condition of the local agency approval of a development project (building permit, land use zoning variance or change, tentative subdivision or parcel map, etc.). Where development occurs or land use changes are proposed, the local agency, through its regulatory authority, may require dedications. Typically, the property owner or their agent initiates the request that triggers the dedication. Caltrans may also request a dedication when an encroachment permit is requested through the district Encroachment Permits Office. Both of these methods will be described further, below. Dedications are not usually part of the project development process. However, they can be incorporated into it when occurring coincidentally. For additional information on Dedications see Section 8.29.00.00 of this manual and Section 501.10A of the Encroachment Permits Manual.

6.20.01.01 Initiation Through Planning

The dedication process is initiated when an owner or their representative applies to a governmental entity for an action on the part of that agency that will enhance the value of the applicant's property. Where transportation facilities are impacted by the proposal and a logical connection can be established between the development or land use change and a transportation project, the Department should encourage local agencies to impose reasonable dedication requirements. This process will typically involve the Department's Transportation Planning Office or Branch through the Local Development - Intergovernmental Review (LD-IGR) process, with the Right of Way and Right of Way Engineering offices acting in a review and advisory capacity. Planning should include the Right of Way Engineering (RWE) office (or branch) in the review of all proposed developments. All Project Delivery functions should coordinate to determine whether any dedication should be required of the project. Such requirement would be communicated through Planning to the local agency. Depending on the method of dedication, the local agency may have the option of accepting the dedication or referring the owner (or owner's representative) to dedicate directly to Caltrans. Specifically, if the dedication will be on a final subdivision or parcel map, the local agency must accept it directly. If it will be by deed, either the local agency or Caltrans can accept it. Caltrans acceptance will follow a process substantially similar to that which is described in Section 6.20.01.02.

6.20.01.02 Dedication Requirements

When a dedication is requested through Encroachment Permits, or through a local agency, the applicant must submit the following: • A copy of title report with its supporting documents (maps, deeds, etc.) The title report must be no more than 1 year old when the dedication is accepted by Caltrans. • Hazardous Waste Assessment • A legal description of the grantor's property • A legal description of the parcel offered for dedication or to be dedicated. • Map or draft map of the area surrounding the proposed dedication (such as a parcel or subdivision map). • Improvement or Site plans • Detailed Exhibit or plat of the proposed dedication • Copies of any recorded maps and/or deeds

referred to in the legal description, map, and exhibit. • Access rights, if any, shall be shown and described on the map, exhibit, and deed (if applicable). • Other clearances which may be available or required.

6.20.02.00 Review for Land Surveying Standards
The legal description and proposed mapping are reviewed by the Right of Way Engineering (RWE) office or branch. The description must meet statutory requirements for legal descriptions and be surveyable. It does not have to use the California Coordinate System as a basis of bearings or measurement. Monumentation and field survey requirements will be determined by district RWE on a case-by-case basis. If not approved by RWE, the description is returned to the applicant with an explanation of any issues.

6.20.03.00 Approval and Acceptance
When RWE approves the legal description, it is inserted into the proper deed template by Caltrans and transmitted to the owner for Grantor's signature. (See Exhibit 06-EX-02 for dedication deed template examples.) After the owner (grantor) signs the deed with notarization and returns it to Caltrans, RWE verifies that the description was not altered, and Right of Way reviews the deed and signs it for state acceptance. Right of Way records the deed once all other requirements have been met. See Section 8.29.02.00 of this manual.

6.20.04.00 Recording and Hazardous Waste
The deed is not recorded until a hazardous waste assessment has been completed and signed by the owner. RWE and Right of Way will coordinate with District Environmental staff to ensure the property is acceptable and the documentation meets current guidelines and policies. This process should be initiated early to avoid delays in completing the dedication. The Hazardous Waste procedures prescribed in Section 8.16.00.00 of this manual are specific to project acquisitions; not all aspects apply to dedications. See Section 8.64.00.00 for recordation information.

6.20.05.00 Clear Title
Right of Way will determine whether existing encumbrances need to be cleared from the dedicated property in accordance with the pertinent provisions of Chapter 8 of this manual. A copy of the title report will be provided to Right of Way with the deed, or prior to obtaining Grantor's signature.

6.20.06.00 Other Issues
In order to assist the permittee with demonstrating to the local agency that conditions have been met, RWE may request the permittee to add a statement to the map or deed substantially similar to the following: "Condition #xx of _____ County's Conditions of Approval for Tentative Parcel Map #XXX/NAME (dated _____) is hereby met by this Dedication of State Route XXX right-of-way to the State of California." If the dedication is part of a new subdivision or parcel map, the dedication shall be recorded with the county recorder prior to the final approval of the subdivision or parcel map and shall be delineated on the final map.