APPENDIX G-2

Traffic Report Appendices

This page intentionally left blank.

4542 Ruffner Street
Suite 100
San Diego, CA 92111
858.300.8800 T
www.llgengineers.com

Pasadena
Irvine
San Diego

TECHNICAL APPENDICES
MCCABE RANCH II TM 994

County of Imperial, California
October 9, 2025

LLG Ref. 3-24-3884

APPENDICES

APPENDIX	
A.	Intersection and Street Segment Manual Count Sheets
B.	County of Imperial and City of El Centro Roadway Classification Table; Excerpts from the County of Imperial Circulation Element
C.	Existing Intersection Analysis Worksheets
D.	Year 2027 without Project Intersection Analysis Worksheets
E.	Year 2027 + Project Phase 1 Intersection Analysis Worksheets
F.	Year 2033 without Project Intersection Analysis Worksheets
G.	Year 2033 + Project Phases 1 and 2 Intersection Analysis Worksheets
H.	Year 2039 without Project Intersection Analysis Worksheets
I.	Year 2039 + Project Phases 1, 2 and 3 (TM 994 Buildout) Intersection Analysis Worksheets
J.	Year 2040 without Project Intersection Analysis Worksheets
K.	Year 2040 + Phases 1, 2, 3 + Phase 4 (Specific Plan Buildout) Intersection Analysis Worksheets

APPENDIX A

INTERSECTION AND STREET SEGMENT MANUAL COUNT SHEETS

This page intentionally left blank.

Counts Unlimited, Inc.
PO Box 1178
Corona, CA 92878
(951) 268-6268

City of El Centro
N/S: S Fourth Street (SR-86)
E/W: Ross Avenue
Weather: Clear

File Name : 01_ECO_SR86_Ross AM
Site Code : 05724265
Start Date : 3/21/2024
Page No : 1

Groups Printed- Total Volume

	S Fourth Street Southbound				Ross Avenue Westbound				S Fourth Street Northbound				Ross Avenue Eastbound				
Start Time	Left	Thru	Right	App. Total	Left	Thru	Right	App. Total	Left	Thru	Right	App. Total	Left	Thru	Right	App. Total	Int. Total
07:00 AM	8	69	4	81	12	17	18	47	4	77	16	97	5	20	6	31	256
07:15 AM	6	70	2	78	18	23	35	76	4	89	14	107	4	26	1	31	292
07:30 AM	19	93	5	117	18	42	60	120	6	124	16	146	4	45	18	67	450
07:45 AM	39	130	1	170	19	45	56	120	8	141	20	169	15	56	20	91	550
Total	72	362	12	446	67	127	169	363	22	431	66	519	28	147	45	220	1548
08:00 AM	35	125	3	163	22	18	39	79	13	150	29	192	12	47	13	72	506
08:15 AM	17	94	6	117	19	22	31	72	7	144	20	171	10	30	14	54	414
08:30 AM	19	113	6	138	23	16	26	65	12	127	16	155	10	27	12	49	407
08:45 AM	24	104	7	135	29	25	32	86	7	127	18	152	7	32	12	51	424
Total	95	436	22	553	93	81	128	302	39	548	83	670	39	136	51	226	1751
Grand Total	167	798	34	999	160	208	297	665	61	979	149	1189	67	283	96	446	3299
Apprch %	16.7	79.9	3.4		24.1	31.3	44.7		5.1	82.3	12.5		15	63.5	21.5		
Total %	5.1	24.2	1	30.3	4.8	6.3	9	20.2	1.8	29.7	4.5	36	2	8.6	2.9	13.5	

	S Fourth Street Southbound				Ross Avenue Westbound				S Fourth Street Northbound				Ross Avenue Eastbound				
Start Time	Left	Thru	Right	App. Total	Left	Thru	Right	App. Total	Left	Thru	Right	App. Total	Left	Thru	Right	App. Total	Int. Total
Peak Hour Analysis From 07:00 AM to 08:45 AM - Peak 1 of 1																	
Peak Hour for Entire Intersection Begins at 07:30 AM																	
07:30 AM	19	93	5	117	18	42	**60**	**120**	6	124	16	146	4	45	18	67	450
07:45 AM	**39**	**130**	1	**170**	19	**45**	56	120	8	141	20	169	**15**	**56**	**20**	**91**	**550**
08:00 AM	35	125	3	163	**22**	18	39	79	**13**	**150**	**29**	**192**	12	47	13	72	506
08:15 AM	17	94	**6**	117	19	22	31	72	7	144	20	171	10	30	14	54	414
Total Volume	110	442	15	567	78	127	186	391	34	559	85	678	41	178	65	284	1920
% App. Total	19.4	78	2.6		19.9	32.5	47.6		5	82.4	12.5		14.4	62.7	22.9		
PHF	.705	.850	.625	.834	.886	.706	.775	.815	.654	.932	.733	.883	.683	.795	.813	.780	.873

Counts Unlimited, Inc.
PO Box 1178
Corona, CA 92878
(951) 268-6268

City of El Centro
N/S: S Fourth Street (SR-86)
E/W: Ross Avenue
Weather: Clear

File Name : 01_ECO_SR86_Ross AM
Site Code : 05724265
Start Date : 3/21/2024
Page No : 2

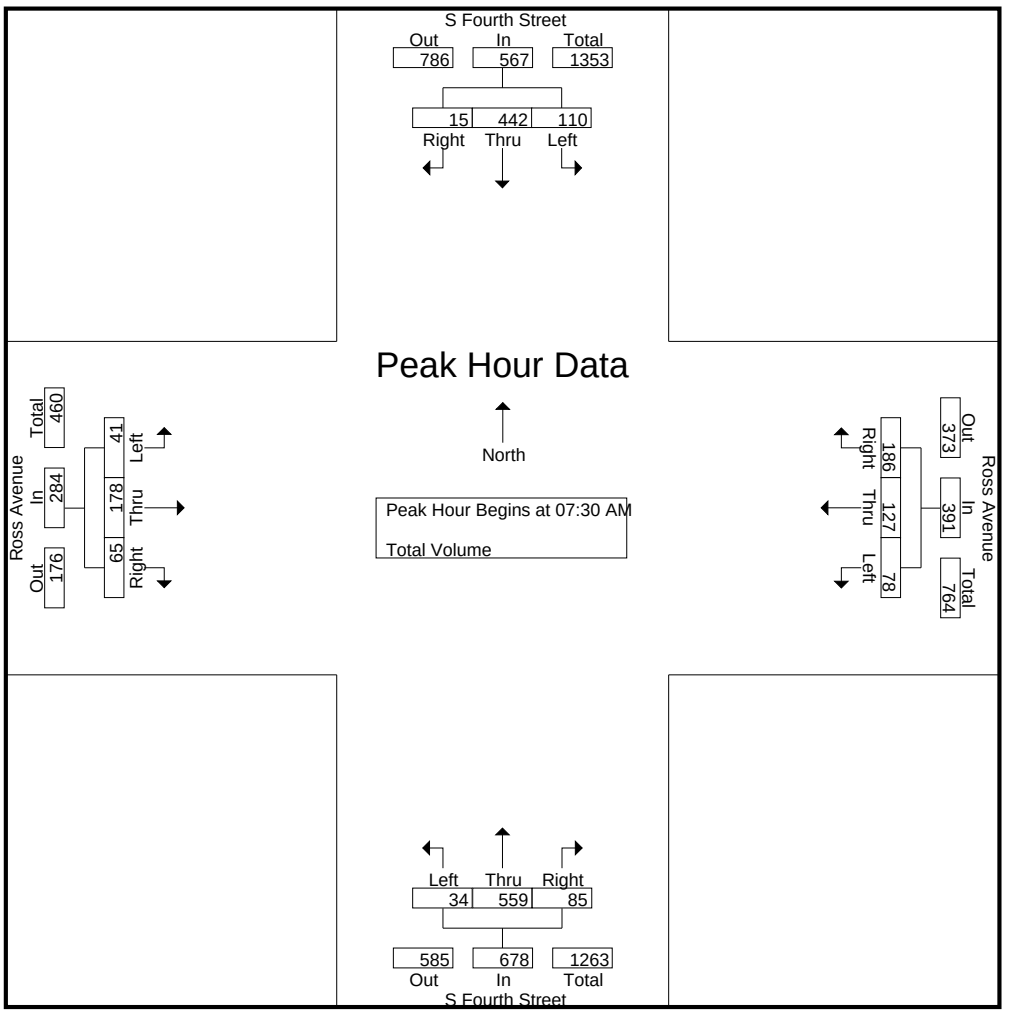

Peak Hour Analysis From 07:00 AM to 08:45 AM - Peak 1 of 1
Peak Hour for Each Approach Begins at:

	07:45 AM				07:15 AM				07:45 AM				07:30 AM			
+0 mins.	**39**	**130**	1	**170**	18	23	35	76	8	141	20	169	4	45	18	67
+15 mins.	35	125	3	163	18	42	**60**	**120**	**13**	**150**	**29**	**192**	**15**	**56**	**20**	**91**
+30 mins.	17	94	**6**	117	19	**45**	56	120	7	144	20	171	12	47	13	72
+45 mins.	19	113	6	138	**22**	18	39	79	12	127	16	155	10	30	14	54
Total Volume	110	462	16	588	77	128	190	395	40	562	85	687	41	178	65	284
% App. Total	18.7	78.6	2.7		19.5	32.4	48.1		5.8	81.8	12.4		14.4	62.7	22.9	
PHF	.705	.888	.667	.865	.875	.711	.792	.823	.769	.937	.733	.895	.683	.795	.813	.780

Counts Unlimited, Inc.
PO Box 1178
Corona, CA 92878
(951) 268-6268

City of El Centro
N/S: S Fourth Street (SR-86)
E/W: Ross Avenue
Weather: Clear

File Name : 01_ECO_SR86_Ross PM
Site Code : 05724265
Start Date : 3/21/2024
Page No : 1

Groups Printed- Total Volume

	S Fourth Street Southbound				Ross Avenue Westbound				S Fourth Street Northbound				Ross Avenue Eastbound				
Start Time	Left	Thru	Right	App. Total	Left	Thru	Right	App. Total	Left	Thru	Right	App. Total	Left	Thru	Right	App. Total	Int. Total
04:00 PM	26	173	3	202	35	31	54	120	8	150	22	180	7	33	18	58	560
04:15 PM	11	167	4	182	17	28	45	90	6	130	20	156	6	24	25	55	483
04:30 PM	28	162	5	195	23	35	40	98	4	135	15	154	6	39	16	61	508
04:45 PM	22	178	5	205	35	31	41	107	9	115	16	140	11	30	13	54	506
Total	87	680	17	784	110	125	180	415	27	530	73	630	30	126	72	228	2057
05:00 PM	23	209	7	239	32	23	42	97	7	191	22	220	9	30	16	55	611
05:15 PM	21	169	11	201	32	31	44	107	9	149	27	185	9	28	20	57	550
05:30 PM	19	159	2	180	27	15	37	79	5	148	21	174	12	30	19	61	494
05:45 PM	14	143	6	163	27	12	42	81	5	141	15	161	8	32	17	57	462
Total	77	680	26	783	118	81	165	364	26	629	85	740	38	120	72	230	2117
Grand Total	164	1360	43	1567	228	206	345	779	53	1159	158	1370	68	246	144	458	4174
Apprch %	10.5	86.8	2.7		29.3	26.4	44.3		3.9	84.6	11.5		14.8	53.7	31.4		
Total %	3.9	32.6	1	37.5	5.5	4.9	8.3	18.7	1.3	27.8	3.8	32.8	1.6	5.9	3.4	11	

	S Fourth Street Southbound				Ross Avenue Westbound				S Fourth Street Northbound				Ross Avenue Eastbound				
Start Time	Left	Thru	Right	App. Total	Left	Thru	Right	App. Total	Left	Thru	Right	App. Total	Left	Thru	Right	App. Total	Int. Total
Peak Hour Analysis From 04:00 PM to 05:45 PM - Peak 1 of 1																	
Peak Hour for Entire Intersection Begins at 04:30 PM																	
04:30 PM	**28**	162	5	195	23	**35**	40	98	4	135	15	154	6	**39**	16	**61**	508
04:45 PM	22	178	5	205	**35**	31	41	**107**	**9**	115	16	140	**11**	30	13	54	506
05:00 PM	23	**209**	7	**239**	32	23	42	97	7	**191**	22	**220**	9	30	16	55	**611**
05:15 PM	21	169	**11**	201	32	31	**44**	107	9	149	**27**	185	9	28	**20**	57	550
Total Volume	94	718	28	840	122	120	167	409	29	590	80	699	35	127	65	227	2175
% App. Total	11.2	85.5	3.3		29.8	29.3	40.8		4.1	84.4	11.4		15.4	55.9	28.6		
PHF	.839	.859	.636	.879	.871	.857	.949	.956	.806	.772	.741	.794	.795	.814	.813	.930	.890

Counts Unlimited, Inc.
PO Box 1178
Corona, CA 92878
(951) 268-6268

City of El Centro
N/S: S Fourth Street (SR-86)
E/W: Ross Avenue
Weather: Clear

File Name : 01_ECO_SR86_Ross PM
Site Code : 05724265
Start Date : 3/21/2024
Page No : 2

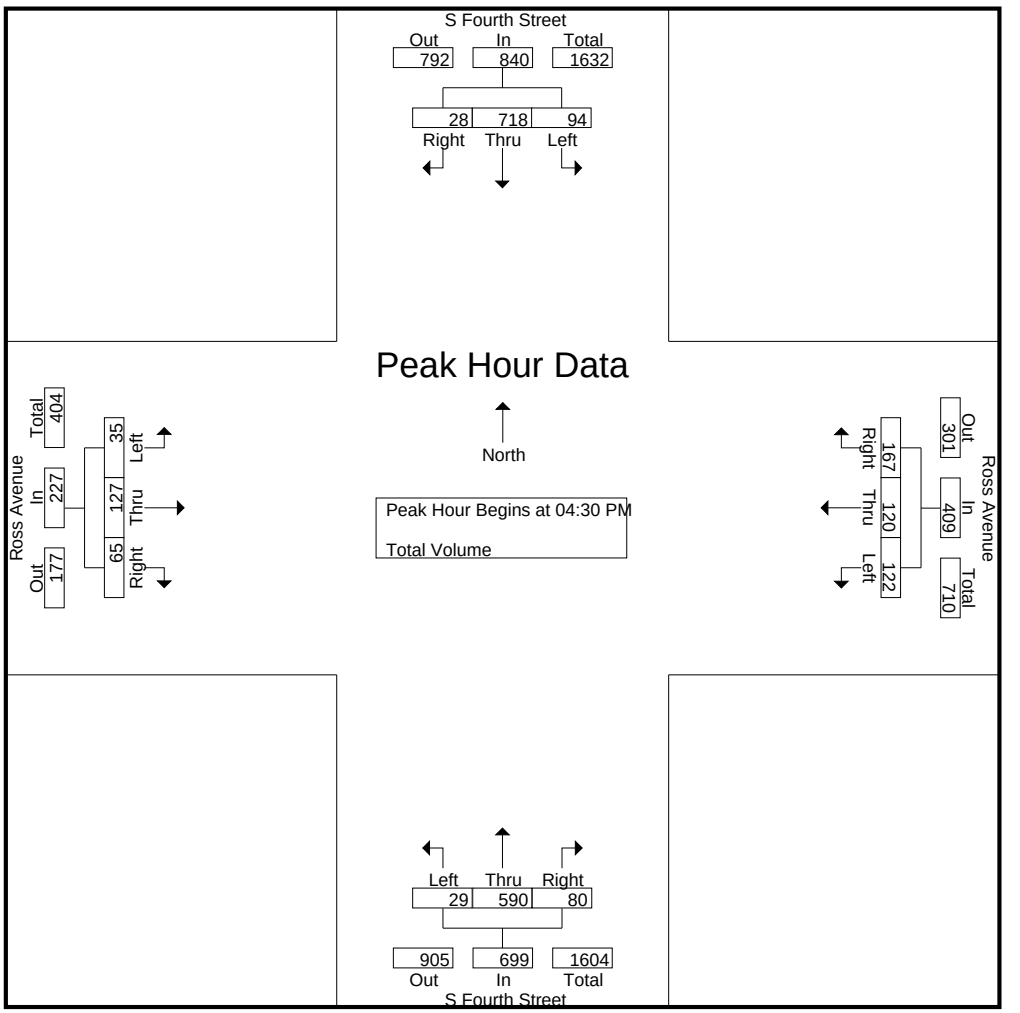

Peak Hour Analysis From 04:00 PM to 05:45 PM - Peak 1 of 1
Peak Hour for Each Approach Begins at:

	04:30 PM				04:00 PM				05:00 PM				05:00 PM			
+0 mins.	**28**	162	5	195	**35**	31	**54**	**120**	7	**191**	22	**220**	9	30	16	55
+15 mins.	22	178	5	205	17	28	45	90	**9**	149	**27**	185	9	28	**20**	57
+30 mins.	23	**209**	7	**239**	23	**35**	40	98	5	148	21	174	**12**	30	19	**61**
+45 mins.	21	169	**11**	201	35	31	41	107	5	141	15	161	8	**32**	17	57
Total Volume	94	718	28	840	110	125	180	415	26	629	85	740	38	120	72	230
% App. Total	11.2	85.5	3.3		26.5	30.1	43.4		3.5	85	11.5		16.5	52.2	31.3	
PHF	.839	.859	.636	.879	.786	.893	.833	.865	.722	.823	.787	.841	.792	.938	.900	.943

Counts Unlimited, Inc.
PO Box 1178
Corona, CA 92878
(951) 268-6268

City of El Centro
N/S: Dogwood Road
E/W: Ross Avenue
Weather: Clear

File Name : 02_ECO_Dog_Ross AM
Site Code : 05724265
Start Date : 3/21/2024
Page No : 1

Groups Printed- Total Volume

	Dogwood Road Southbound				Ross Avenue Westbound				Dogwood Road Northbound				Ross Avenue Eastbound				
Start Time	Left	Thru	Right	App. Total	Left	Thru	Right	App. Total	Left	Thru	Right	App. Total	Left	Thru	Right	App. Total	Int. Total
07:00 AM	7	39	5	51	1	32	9	42	18	59	5	82	7	21	12	40	215
07:15 AM	8	62	7	77	2	23	7	32	22	87	11	120	21	14	20	55	284
07:30 AM	6	91	15	112	12	44	8	64	22	90	16	128	12	24	13	49	353
07:45 AM	5	103	21	129	9	36	20	65	36	116	13	165	12	23	30	65	424
Total	26	295	48	369	24	135	44	203	98	352	45	495	52	82	75	209	1276
08:00 AM	6	61	12	79	10	27	17	54	33	92	23	148	14	22	22	58	339
08:15 AM	6	62	15	83	8	31	13	52	18	79	7	104	9	19	17	45	284
08:30 AM	7	64	23	94	13	23	16	52	19	62	9	90	8	23	26	57	293
08:45 AM	8	63	16	87	9	24	9	42	16	83	4	103	12	20	15	47	279
Total	27	250	66	343	40	105	55	200	86	316	43	445	43	84	80	207	1195
Grand Total	53	545	114	712	64	240	99	403	184	668	88	940	95	166	155	416	2471
Apprch %	7.4	76.5	16		15.9	59.6	24.6		19.6	71.1	9.4		22.8	39.9	37.3		
Total %	2.1	22.1	4.6	28.8	2.6	9.7	4	16.3	7.4	27	3.6	38	3.8	6.7	6.3	16.8	

	Dogwood Road Southbound				Ross Avenue Westbound				Dogwood Road Northbound				Ross Avenue Eastbound				
Start Time	Left	Thru	Right	App. Total	Left	Thru	Right	App. Total	Left	Thru	Right	App. Total	Left	Thru	Right	App. Total	Int. Total
Peak Hour Analysis From 07:00 AM to 08:45 AM - Peak 1 of 1																	
Peak Hour for Entire Intersection Begins at 07:15 AM																	
07:15 AM	**8**	62	7	77	2	23	7	32	22	87	11	120	**21**	14	20	55	284
07:30 AM	6	91	15	112	**12**	**44**	8	64	22	90	16	128	12	**24**	13	49	353
07:45 AM	5	**103**	**21**	**129**	9	36	**20**	**65**	**36**	**116**	13	**165**	12	23	**30**	**65**	**424**
08:00 AM	6	61	12	79	10	27	17	54	33	92	**23**	148	14	22	22	58	339
Total Volume	25	317	55	397	33	130	52	215	113	385	63	561	59	83	85	227	1400
% App. Total	6.3	79.8	13.9		15.3	60.5	24.2		20.1	68.6	11.2		26	36.6	37.4		
PHF	.781	.769	.655	.769	.688	.739	.650	.827	.785	.830	.685	.850	.702	.865	.708	.873	.825

Counts Unlimited, Inc.
PO Box 1178
Corona, CA 92878
(951) 268-6268

City of El Centro
N/S: Dogwood Road
E/W: Ross Avenue
Weather: Clear

File Name : 02_ECO_Dog_Ross AM
Site Code : 05724265
Start Date : 3/21/2024
Page No : 2

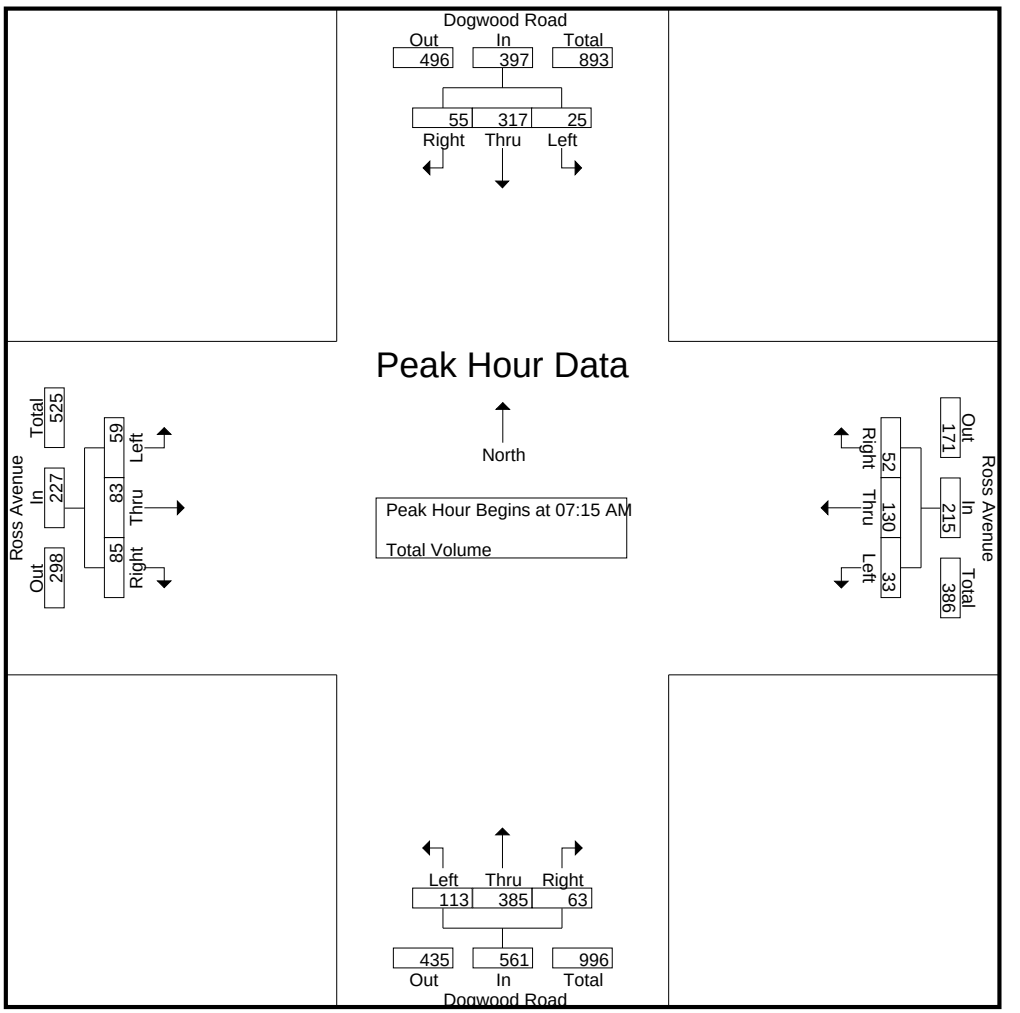

Peak Hour Analysis From 07:00 AM to 08:45 AM - Peak 1 of 1
Peak Hour for Each Approach Begins at:

	07:30 AM				07:30 AM				07:15 AM				07:15 AM			
+0 mins.	**6**	91	15	112	**12**	**44**	8	64	22	87	11	120	**21**	14	20	55
+15 mins.	5	**103**	**21**	**129**	9	36	**20**	**65**	22	90	16	128	12	**24**	13	49
+30 mins.	6	61	12	79	10	27	17	54	**36**	**116**	13	**165**	12	23	**30**	**65**
+45 mins.	6	62	15	83	8	31	13	52	33	92	**23**	148	14	22	22	58
Total Volume	23	317	63	403	39	138	58	235	113	385	63	561	59	83	85	227
% App. Total	5.7	78.7	15.6		16.6	58.7	24.7		20.1	68.6	11.2		26	36.6	37.4	
PHF	.958	.769	.750	.781	.813	.784	.725	.904	.785	.830	.685	.850	.702	.865	.708	.873

Counts Unlimited, Inc.
PO Box 1178
Corona, CA 92878
(951) 268-6268

City of El Centro
N/S: Dogwood Road
E/W: Ross Avenue
Weather: Clear

File Name : 02_ECO_Dog_Ross PM
Site Code : 05724265
Start Date : 3/21/2024
Page No : 1

Groups Printed- Total Volume

	Dogwood Road Southbound				Ross Avenue Westbound				Dogwood Road Northbound				Ross Avenue Eastbound				
Start Time	Left	Thru	Right	App. Total	Left	Thru	Right	App. Total	Left	Thru	Right	App. Total	Left	Thru	Right	App. Total	Int. Total
04:00 PM	15	114	18	147	15	64	23	102	35	110	8	153	22	25	40	87	489
04:15 PM	12	105	13	130	11	29	14	54	17	125	6	148	11	18	46	75	407
04:30 PM	10	128	11	149	14	24	6	44	35	126	10	171	8	30	44	82	446
04:45 PM	5	107	8	120	16	22	19	57	28	107	6	141	10	27	34	71	389
Total	42	454	50	546	56	139	62	257	115	468	30	613	51	100	164	315	1731
05:00 PM	11	121	17	149	22	30	9	61	19	103	11	133	15	25	59	99	442
05:15 PM	7	128	12	147	7	27	6	40	28	118	10	156	7	22	41	70	413
05:30 PM	5	117	8	130	9	16	13	38	26	99	10	135	9	26	33	68	371
05:45 PM	7	82	9	98	10	25	9	44	21	105	7	133	8	22	29	59	334
Total	30	448	46	524	48	98	37	183	94	425	38	557	39	95	162	296	1560
Grand Total	72	902	96	1070	104	237	99	440	209	893	68	1170	90	195	326	611	3291
Apprch %	6.7	84.3	9		23.6	53.9	22.5		17.9	76.3	5.8		14.7	31.9	53.4		
Total %	2.2	27.4	2.9	32.5	3.2	7.2	3	13.4	6.4	27.1	2.1	35.6	2.7	5.9	9.9	18.6	

	Dogwood Road Southbound				Ross Avenue Westbound				Dogwood Road Northbound				Ross Avenue Eastbound				
Start Time	Left	Thru	Right	App. Total	Left	Thru	Right	App. Total	Left	Thru	Right	App. Total	Left	Thru	Right	App. Total	Int. Total
Peak Hour Analysis From 04:00 PM to 05:45 PM - Peak 1 of 1																	
Peak Hour for Entire Intersection Begins at 04:00 PM																	
04:00 PM	**15**	114	**18**	147	15	**64**	**23**	**102**	**35**	110	8	153	**22**	25	40	**87**	**489**
04:15 PM	12	105	13	130	11	29	14	54	17	125	6	148	11	18	**46**	75	407
04:30 PM	10	**128**	11	**149**	14	24	6	44	35	**126**	**10**	**171**	8	**30**	44	82	446
04:45 PM	5	107	8	120	**16**	22	19	57	28	107	6	141	10	27	34	71	389
Total Volume	42	454	50	546	56	139	62	257	115	468	30	613	51	100	164	315	1731
% App. Total	7.7	83.2	9.2		21.8	54.1	24.1		18.8	76.3	4.9		16.2	31.7	52.1		
PHF	.700	.887	.694	.916	.875	.543	.674	.630	.821	.929	.750	.896	.580	.833	.891	.905	.885

Counts Unlimited, Inc.
PO Box 1178
Corona, CA 92878
(951) 268-6268

City of El Centro
N/S: Dogwood Road
E/W: Ross Avenue
Weather: Clear

File Name : 02_ECO_Dog_Ross PM
Site Code : 05724265
Start Date : 3/21/2024
Page No : 2

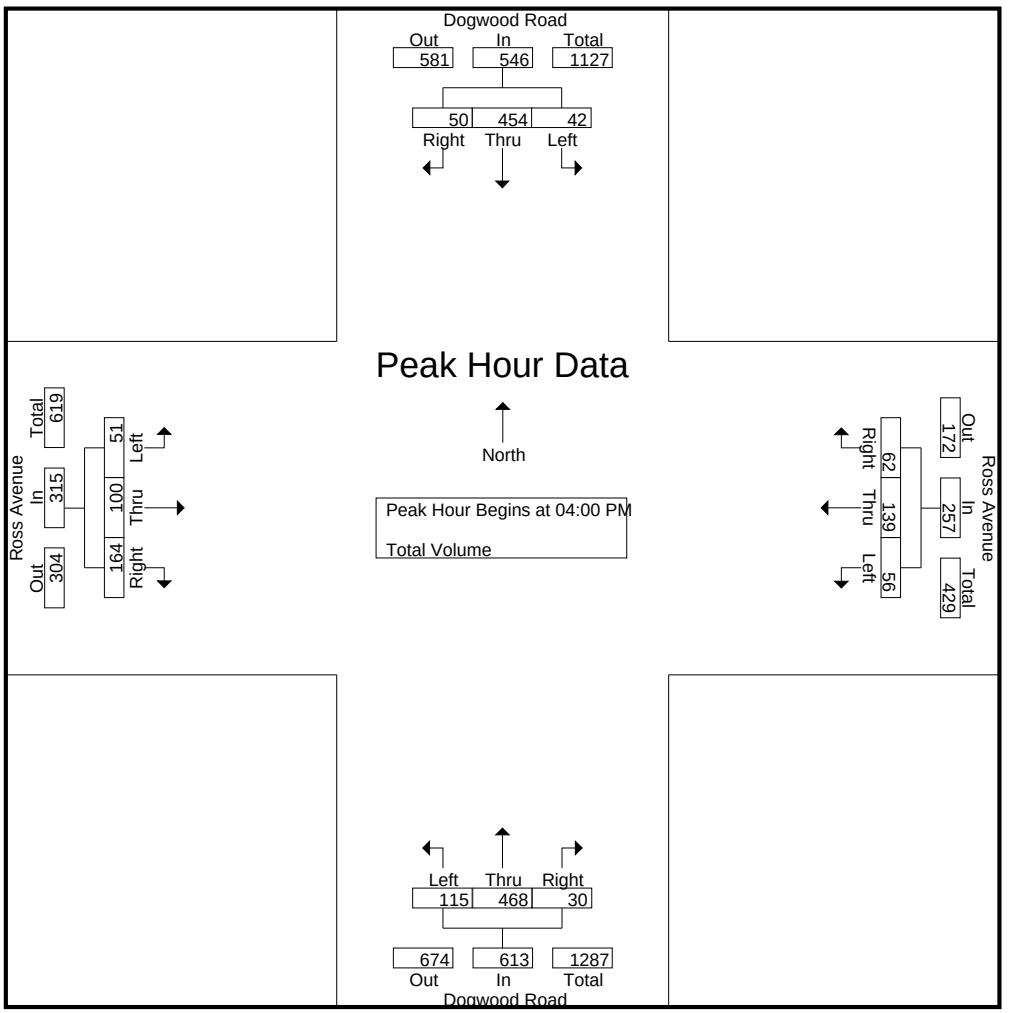

Peak Hour Analysis From 04:00 PM to 05:45 PM - Peak 1 of 1
Peak Hour for Each Approach Begins at:

	04:30 PM				04:00 PM				04:00 PM				04:15 PM			
+0 mins.	10	**128**	11	**149**	15	**64**	**23**	**102**	**35**	110	8	153	11	18	46	75
+15 mins.	5	107	8	120	11	29	14	54	17	125	6	148	8	**30**	44	82
+30 mins.	**11**	121	**17**	149	14	24	6	44	35	**126**	**10**	**171**	10	27	34	71
+45 mins.	7	128	12	147	**16**	22	19	57	28	107	6	141	**15**	25	**59**	**99**
Total Volume	33	484	48	565	56	139	62	257	115	468	30	613	44	100	183	327
% App. Total	5.8	85.7	8.5		21.8	54.1	24.1		18.8	76.3	4.9		13.5	30.6	56	
PHF	.750	.945	.706	.948	.875	.543	.674	.630	.821	.929	.750	.896	.733	.833	.775	.826

Counts Unlimited, Inc.
PO Box 1178
Corona, CA 92878
(951) 268-6268

City of El Centro
N/S: S Fourth Street (SR-86)
E/W: I-8 Westbound Ramps
Weather: Clear

File Name : 03_ECO_SR86_8W AM
Site Code : 05724265
Start Date : 3/21/2024
Page No : 1

Groups Printed- Total Volume

	S Fourth Street Southbound				I-8 Westbound On Ramp Westbound				S Fourth Street Northbound				I-8 Westbound On Ramp Eastbound				
Start Time	Left	Thru	Right	App. Total	Left	Thru	Right	App. Total	Left	Thru	Right	App. Total	Left	Thru	Right	App. Total	Int. Total
07:00 AM	0	91	22	113	39	0	59	98	24	62	0	86	0	0	0	0	297
07:15 AM	0	109	29	138	46	0	64	110	30	81	0	111	0	0	0	0	359
07:30 AM	0	153	23	176	44	0	92	136	53	121	0	174	0	0	0	0	486
07:45 AM	0	196	35	231	75	0	91	166	37	119	0	156	0	0	0	0	553
Total	0	549	109	658	204	0	306	510	144	383	0	527	0	0	0	0	1695
08:00 AM	0	178	21	199	53	0	60	113	27	127	0	154	0	0	0	0	466
08:15 AM	0	175	16	191	40	1	61	102	26	142	0	168	0	0	0	0	461
08:30 AM	0	153	18	171	47	1	60	108	29	124	0	153	0	0	0	0	432
08:45 AM	0	171	17	188	44	0	59	103	24	111	0	135	0	0	0	0	426
Total	0	677	72	749	184	2	240	426	106	504	0	610	0	0	0	0	1785
Grand Total	0	1226	181	1407	388	2	546	936	250	887	0	1137	0	0	0	0	3480
Apprch %	0	87.1	12.9		41.5	0.2	58.3		22	78	0		0	0	0		
Total %	0	35.2	5.2	40.4	11.1	0.1	15.7	26.9	7.2	25.5	0	32.7	0	0	0	0	

	S Fourth Street Southbound				I-8 Westbound On Ramp Westbound				S Fourth Street Northbound				I-8 Westbound On Ramp Eastbound				
Start Time	Left	Thru	Right	App. Total	Left	Thru	Right	App. Total	Left	Thru	Right	App. Total	Left	Thru	Right	App. Total	Int. Total
Peak Hour Analysis From 07:00 AM to 08:45 AM - Peak 1 of 1																	
Peak Hour for Entire Intersection Begins at 07:30 AM																	
07:30 AM	0	153	23	176	44	0	**92**	136	**53**	121	0	**174**	0	0	0	0	486
07:45 AM	0	**196**	**35**	**231**	**75**	0	91	**166**	37	119	0	156	0	0	0	0	**553**
08:00 AM	0	178	21	199	53	0	60	113	27	127	0	154	0	0	0	0	466
08:15 AM	0	175	16	191	40	**1**	61	102	26	**142**	0	168	0	0	0	0	461
Total Volume	0	702	95	797	212	1	304	517	143	509	0	652	0	0	0	0	1966
% App. Total	0	88.1	11.9		41	0.2	58.8		21.9	78.1	0		0	0	0		
PHF	.000	.895	.679	.863	.707	.250	.826	.779	.675	.896	.000	.937	.000	.000	.000	.000	.889

Counts Unlimited, Inc.
PO Box 1178
Corona, CA 92878
(951) 268-6268

City of El Centro
N/S: S Fourth Street (SR-86)
E/W: I-8 Westbound Ramps
Weather: Clear

File Name : 03_ECO_SR86_8W AM
Site Code : 05724265
Start Date : 3/21/2024
Page No : 2

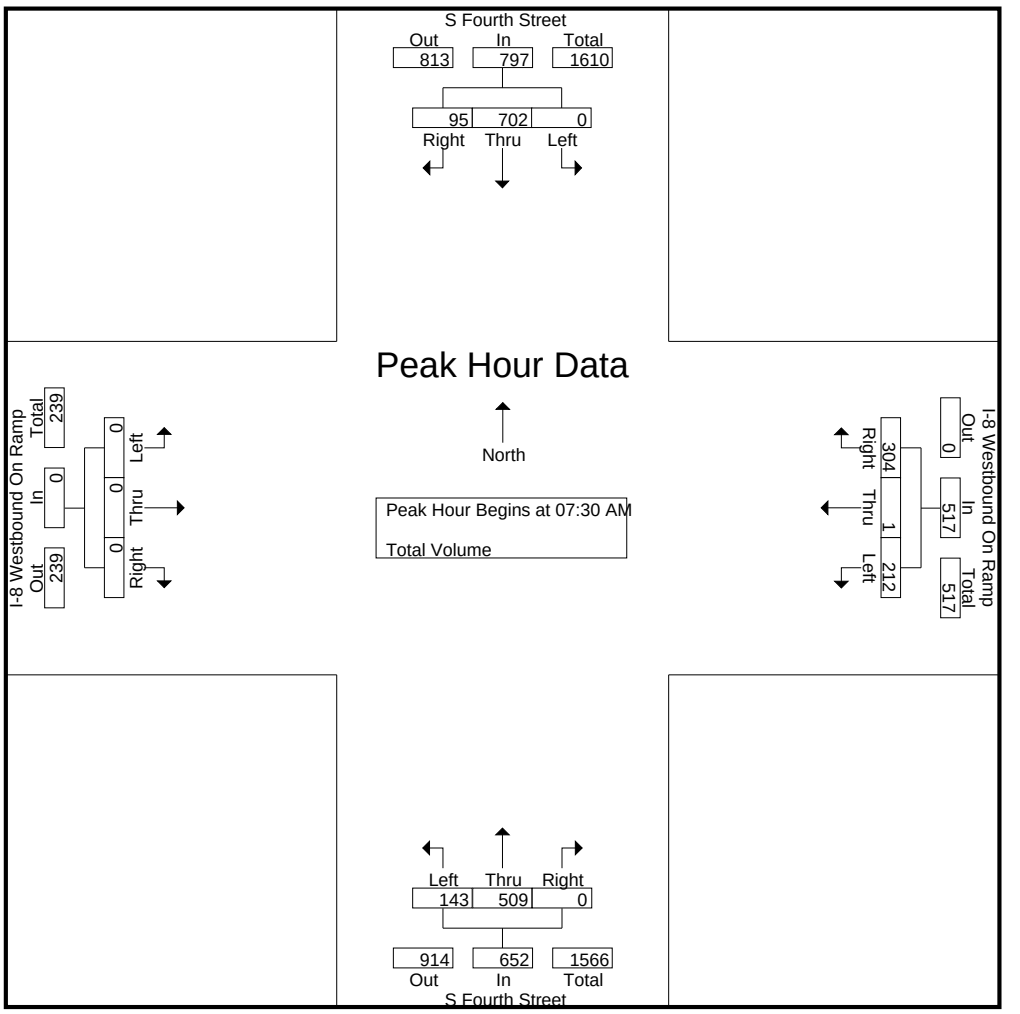

Peak Hour Analysis From 07:00 AM to 08:45 AM - Peak 1 of 1
Peak Hour for Each Approach Begins at:

	07:30 AM				07:15 AM				07:30 AM				07:00 AM			
+0 mins.	0	153	23	176	46	0	64	110	**53**	121	0	**174**	0	0	0	0
+15 mins.	0	**196**	**35**	**231**	44	0	**92**	136	37	119	0	156	0	0	0	0
+30 mins.	0	178	21	199	**75**	0	91	**166**	27	127	0	154	0	0	0	0
+45 mins.	0	175	16	191	53	0	60	113	26	**142**	0	168	0	0	0	0
Total Volume	0	702	95	797	218	0	307	525	143	509	0	652	0	0	0	0
% App. Total	0	88.1	11.9		41.5	0	58.5		21.9	78.1	0		0	0	0	
PHF	.000	.895	.679	.863	.727	.000	.834	.791	.675	.896	.000	.937	.000	.000	.000	.000

Counts Unlimited, Inc.
PO Box 1178
Corona, CA 92878
(951) 268-6268

City of El Centro
N/S: S Fourth Street (SR-86)
E/W: I-8 Westbound Ramps
Weather: Clear

File Name : 03_ECO_SR86_8W PM
Site Code : 05724265
Start Date : 3/21/2024
Page No : 1

Groups Printed- Total Volume

	S Fourth Street Southbound				I-8 Westbound On Ramp Westbound				S Fourth Street Northbound				I-8 Westbound On Ramp Eastbound				
Start Time	Left	Thru	Right	App. Total	Left	Thru	Right	App. Total	Left	Thru	Right	App. Total	Left	Thru	Right	App. Total	Int. Total
04:00 PM	0	244	17	261	46	0	70	116	31	135	0	166	0	0	0	0	543
04:15 PM	0	217	21	238	48	0	80	128	26	125	0	151	0	0	0	0	517
04:30 PM	0	236	22	258	38	1	83	122	25	121	0	146	0	0	0	0	526
04:45 PM	0	221	27	248	49	0	63	112	30	128	0	158	0	0	0	0	518
Total	0	918	87	1005	181	1	296	478	112	509	0	621	0	0	0	0	2104
05:00 PM	0	228	24	252	56	1	62	119	65	203	0	268	0	0	0	0	639
05:15 PM	0	279	20	299	51	0	49	100	42	179	0	221	0	0	0	0	620
05:30 PM	0	211	18	229	33	0	51	84	40	134	0	174	0	0	0	0	487
05:45 PM	0	234	17	251	24	0	59	83	34	161	0	195	0	0	0	0	529
Total	0	952	79	1031	164	1	221	386	181	677	0	858	0	0	0	0	2275
Grand Total	0	1870	166	2036	345	2	517	864	293	1186	0	1479	0	0	0	0	4379
Apprch %	0	91.8	8.2		39.9	0.2	59.8		19.8	80.2	0		0	0	0		
Total %	0	42.7	3.8	46.5	7.9	0	11.8	19.7	6.7	27.1	0	33.8	0	0	0	0	

	S Fourth Street Southbound				I-8 Westbound On Ramp Westbound				S Fourth Street Northbound				I-8 Westbound On Ramp Eastbound				
Start Time	Left	Thru	Right	App. Total	Left	Thru	Right	App. Total	Left	Thru	Right	App. Total	Left	Thru	Right	App. Total	Int. Total
Peak Hour Analysis From 04:00 PM to 05:45 PM - Peak 1 of 1																	
Peak Hour for Entire Intersection Begins at 04:30 PM																	
04:30 PM	0	236	22	258	38	**1**	**83**	**122**	25	121	0	146	0	0	0	0	526
04:45 PM	0	221	**27**	248	49	0	63	112	30	128	0	158	0	0	0	0	518
05:00 PM	0	228	24	252	**56**	1	62	119	**65**	**203**	0	**268**	0	0	0	0	**639**
05:15 PM	0	**279**	20	**299**	51	0	49	100	42	179	0	221	0	0	0	0	620
Total Volume	0	964	93	1057	194	2	257	453	162	631	0	793	0	0	0	0	2303
% App. Total	0	91.2	8.8		42.8	0.4	56.7		20.4	79.6	0		0	0	0		
PHF	.000	.864	.861	.884	.866	.500	.774	.928	.623	.777	.000	.740	.000	.000	.000	.000	.901

Counts Unlimited, Inc.
PO Box 1178
Corona, CA 92878
(951) 268-6268

City of El Centro
N/S: S Fourth Street (SR-86)
E/W: I-8 Westbound Ramps
Weather: Clear

File Name : 03_ECO_SR86_8W PM
Site Code : 05724265
Start Date : 3/21/2024
Page No : 2

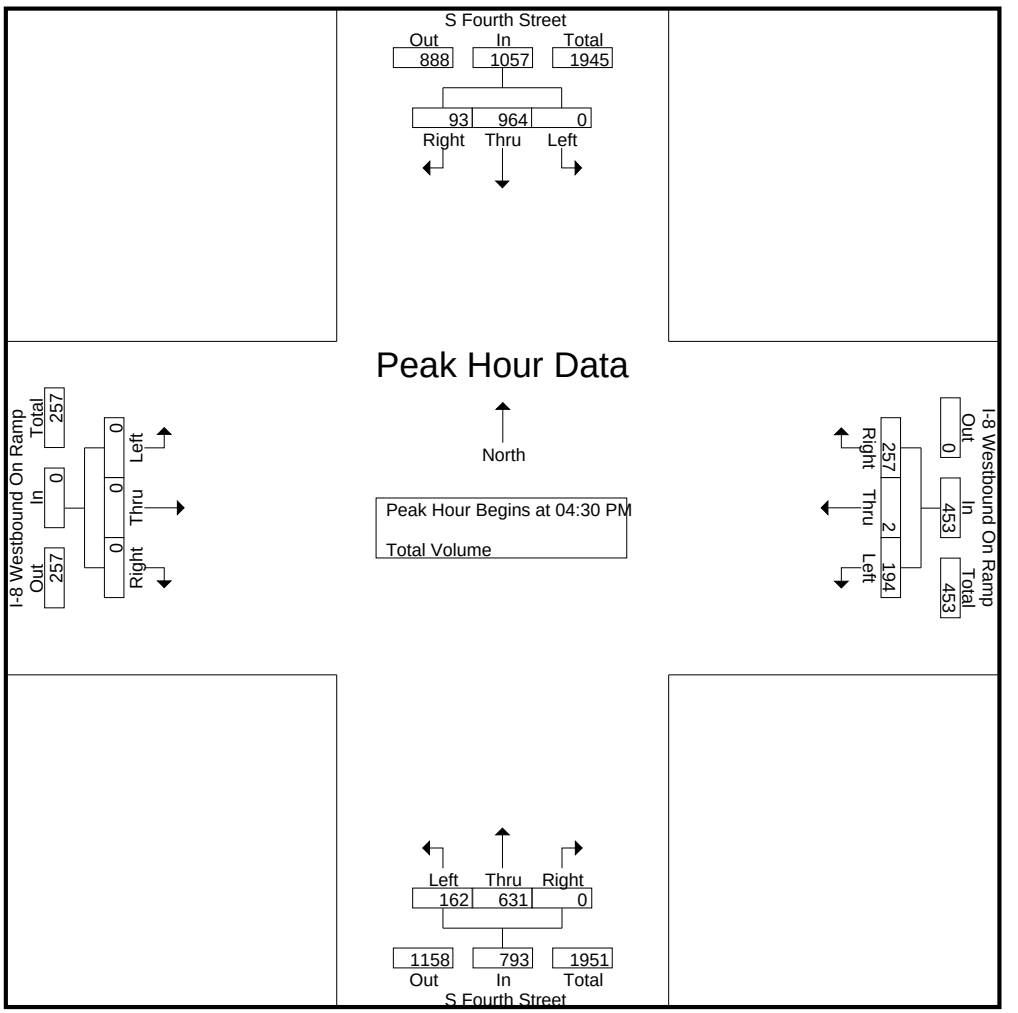

Peak Hour Analysis From 04:00 PM to 05:45 PM - Peak 1 of 1
Peak Hour for Each Approach Begins at:

	04:30 PM				04:15 PM				05:00 PM				04:00 PM			
+0 mins.	0	236	22	258	48	0	80	**128**	**65**	**203**	0	**268**	0	0	0	0
+15 mins.	0	221	**27**	248	38	**1**	**83**	122	42	179	0	221	0	0	0	0
+30 mins.	0	228	24	252	49	0	63	112	40	134	0	174	0	0	0	0
+45 mins.	0	**279**	20	**299**	**56**	1	62	119	34	161	0	195	0	0	0	0
Total Volume	0	964	93	1057	191	2	288	481	181	677	0	858	0	0	0	0
% App. Total	0	91.2	8.8		39.7	0.4	59.9		21.1	78.9	0		0	0	0	
PHF	.000	.864	.861	.884	.853	.500	.867	.939	.696	.834	.000	.800	.000	.000	.000	.000

Counts Unlimited, Inc.
PO Box 1178
Corona, CA 92878
(951) 268-6268

City of El Centro
N/S: S Fourth Street (SR-86)
E/W: I-8 Eastbound Ramps
Weather: Clear

File Name : 04_ECO_SR86_8E AM
Site Code : 05724265
Start Date : 3/21/2024
Page No : 1

Groups Printed- Total Volume

	S Fourth Street Southbound				I-8 Eastbound On Ramp Westbound				S Fourth Street Northbound				I-8 Eastbound Off Ramp Eastbound				
Start Time	Left	Thru	Right	App. Total	Left	Thru	Right	App. Total	Left	Thru	Right	App. Total	Left	Thru	Right	App. Total	Int. Total
07:00 AM	34	89	0	123	0	0	0	0	0	79	33	112	5	0	27	32	267
07:15 AM	40	118	0	158	0	0	0	0	0	103	44	147	9	0	30	39	344
07:30 AM	57	135	0	192	0	0	0	0	0	160	43	203	11	1	34	46	441
07:45 AM	57	204	0	261	0	0	0	0	0	138	40	178	20	0	99	119	558
Total	188	546	0	734	0	0	0	0	0	480	160	640	45	1	190	236	1610
08:00 AM	59	181	0	240	0	0	0	0	0	128	45	173	28	0	54	82	495
08:15 AM	59	156	0	215	0	0	0	0	0	141	26	167	14	0	24	38	420
08:30 AM	50	154	0	204	0	0	0	0	0	135	27	162	13	0	37	50	416
08:45 AM	52	163	0	215	0	0	0	0	0	123	40	163	16	0	51	67	445
Total	220	654	0	874	0	0	0	0	0	527	138	665	71	0	166	237	1776
Grand Total	408	1200	0	1608	0	0	0	0	0	1007	298	1305	116	1	356	473	3386
Apprch %	25.4	74.6	0		0	0	0		0	77.2	22.8		24.5	0.2	75.3		
Total %	12	35.4	0	47.5	0	0	0	0	0	29.7	8.8	38.5	3.4	0	10.5	14	

	S Fourth Street Southbound				I-8 Eastbound On Ramp Westbound				S Fourth Street Northbound				I-8 Eastbound Off Ramp Eastbound				
Start Time	Left	Thru	Right	App. Total	Left	Thru	Right	App. Total	Left	Thru	Right	App. Total	Left	Thru	Right	App. Total	Int. Total
Peak Hour Analysis From 07:00 AM to 08:45 AM - Peak 1 of 1																	
Peak Hour for Entire Intersection Begins at 07:30 AM																	
07:30 AM	57	135	0	192	0	0	0	0	0	**160**	43	**203**	11	**1**	34	46	441
07:45 AM	57	**204**	0	**261**	0	0	0	0	0	138	40	178	20	0	**99**	**119**	**558**
08:00 AM	**59**	181	0	240	0	0	0	0	0	128	**45**	173	**28**	0	54	82	495
08:15 AM	59	156	0	215	0	0	0	0	0	141	26	167	14	0	24	38	420
Total Volume	232	676	0	908	0	0	0	0	0	567	154	721	73	1	211	285	1914
% App. Total	25.6	74.4	0		0	0	0		0	78.6	21.4		25.6	0.4	74		
PHF	.983	.828	.000	.870	.000	.000	.000	.000	.000	.886	.856	.888	.652	.250	.533	.599	.858

Counts Unlimited, Inc.
PO Box 1178
Corona, CA 92878
(951) 268-6268

City of El Centro
N/S: S Fourth Street (SR-86)
E/W: I-8 Eastbound Ramps
Weather: Clear

File Name : 04_ECO_SR86_8E AM
Site Code : 05724265
Start Date : 3/21/2024
Page No : 2

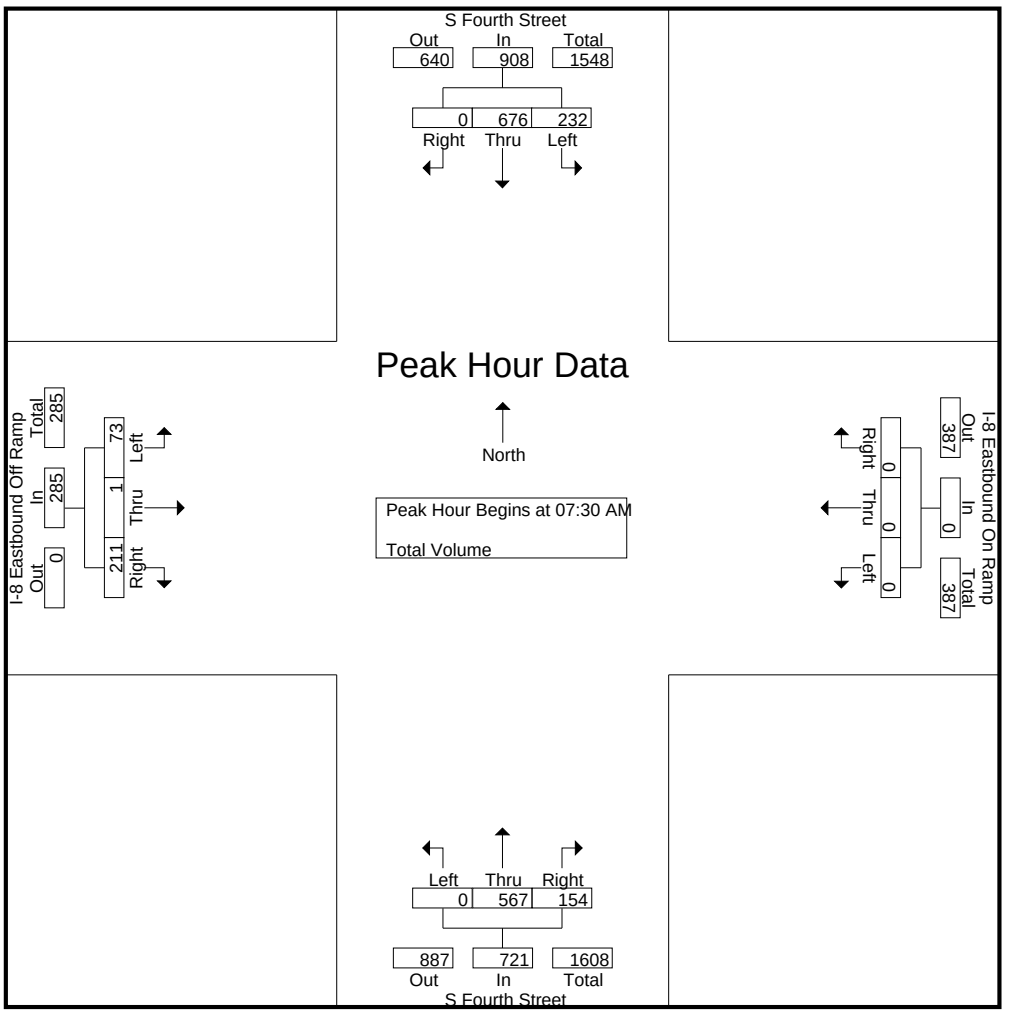

Peak Hour Analysis From 07:00 AM to 08:45 AM - Peak 1 of 1
Peak Hour for Each Approach Begins at:

	07:45 AM				07:00 AM				07:30 AM				07:45 AM			
+0 mins.	57	**204**	0	**261**	0	0	0	0	0	**160**	43	**203**	20	0	**99**	**119**
+15 mins.	**59**	181	0	240	0	0	0	0	0	138	40	178	**28**	0	54	82
+30 mins.	59	156	0	215	0	0	0	0	0	128	**45**	173	14	0	24	38
+45 mins.	50	154	0	204	0	0	0	0	0	141	26	167	13	0	37	50
Total Volume	225	695	0	920	0	0	0	0	0	567	154	721	75	0	214	289
% App. Total	24.5	75.5	0		0	0	0		0	78.6	21.4		26	0	74	
PHF	.953	.852	.000	.881	.000	.000	.000	.000	.000	.886	.856	.888	.670	.000	.540	.607

Counts Unlimited, Inc.
PO Box 1178
Corona, CA 92878
(951) 268-6268

City of El Centro
N/S: S Fourth Street (SR-86)
E/W: I-8 Eastbound Ramps
Weather: Clear

File Name : 04_ECO_SR86_8E PM
Site Code : 05724265
Start Date : 3/21/2024
Page No : 1

Groups Printed- Total Volume

	S Fourth Street Southbound				I-8 Eastbound On Ramp Westbound				S Fourth Street Northbound				I-8 Eastbound Off Ramp Eastbound				
Start Time	Left	Thru	Right	App. Total	Left	Thru	Right	App. Total	Left	Thru	Right	App. Total	Left	Thru	Right	App. Total	Int. Total
04:00 PM	93	215	0	308	0	0	0	0	0	153	45	198	20	0	72	92	598
04:15 PM	85	190	0	275	0	0	0	0	0	133	55	188	24	1	64	89	552
04:30 PM	96	176	0	272	0	0	0	0	0	142	64	206	11	0	67	78	556
04:45 PM	76	187	0	263	0	0	0	0	0	162	46	208	8	1	66	75	546
Total	350	768	0	1118	0	0	0	0	0	590	210	800	63	2	269	334	2252
05:00 PM	72	198	0	270	0	0	0	0	0	248	99	347	22	1	46	69	686
05:15 PM	114	223	0	337	0	0	0	0	0	220	76	296	15	1	79	95	728
05:30 PM	87	165	0	252	0	0	0	0	0	166	63	229	11	1	60	72	553
05:45 PM	78	176	0	254	0	0	0	0	0	186	49	235	20	0	52	72	561
Total	351	762	0	1113	0	0	0	0	0	820	287	1107	68	3	237	308	2528
Grand Total	701	1530	0	2231	0	0	0	0	0	1410	497	1907	131	5	506	642	4780
Apprch %	31.4	68.6	0		0	0	0		0	73.9	26.1		20.4	0.8	78.8		
Total %	14.7	32	0	46.7	0	0	0	0	0	29.5	10.4	39.9	2.7	0.1	10.6	13.4	

	S Fourth Street Southbound				I-8 Eastbound On Ramp Westbound				S Fourth Street Northbound				I-8 Eastbound Off Ramp Eastbound				
Start Time	Left	Thru	Right	App. Total	Left	Thru	Right	App. Total	Left	Thru	Right	App. Total	Left	Thru	Right	App. Total	Int. Total
Peak Hour Analysis From 04:00 PM to 05:45 PM - Peak 1 of 1																	
Peak Hour for Entire Intersection Begins at 05:00 PM																	
05:00 PM	72	198	0	270	0	0	0	0	0	**248**	**99**	**347**	**22**	**1**	46	69	686
05:15 PM	**114**	**223**	0	**337**	0	0	0	0	0	220	76	296	15	1	**79**	**95**	**728**
05:30 PM	87	165	0	252	0	0	0	0	0	166	63	229	11	1	60	72	553
05:45 PM	78	176	0	254	0	0	0	0	0	186	49	235	20	0	52	72	561
Total Volume	351	762	0	1113	0	0	0	0	0	820	287	1107	68	3	237	308	2528
% App. Total	31.5	68.5	0		0	0	0		0	74.1	25.9		22.1	1	76.9		
PHF	.770	.854	.000	.826	.000	.000	.000	.000	.000	.827	.725	.798	.773	.750	.750	.811	.868

Counts Unlimited, Inc.
PO Box 1178
Corona, CA 92878
(951) 268-6268

City of El Centro
N/S: S Fourth Street (SR-86)
E/W: I-8 Eastbound Ramps
Weather: Clear

File Name : 04_ECO_SR86_8E PM
Site Code : 05724265
Start Date : 3/21/2024
Page No : 2

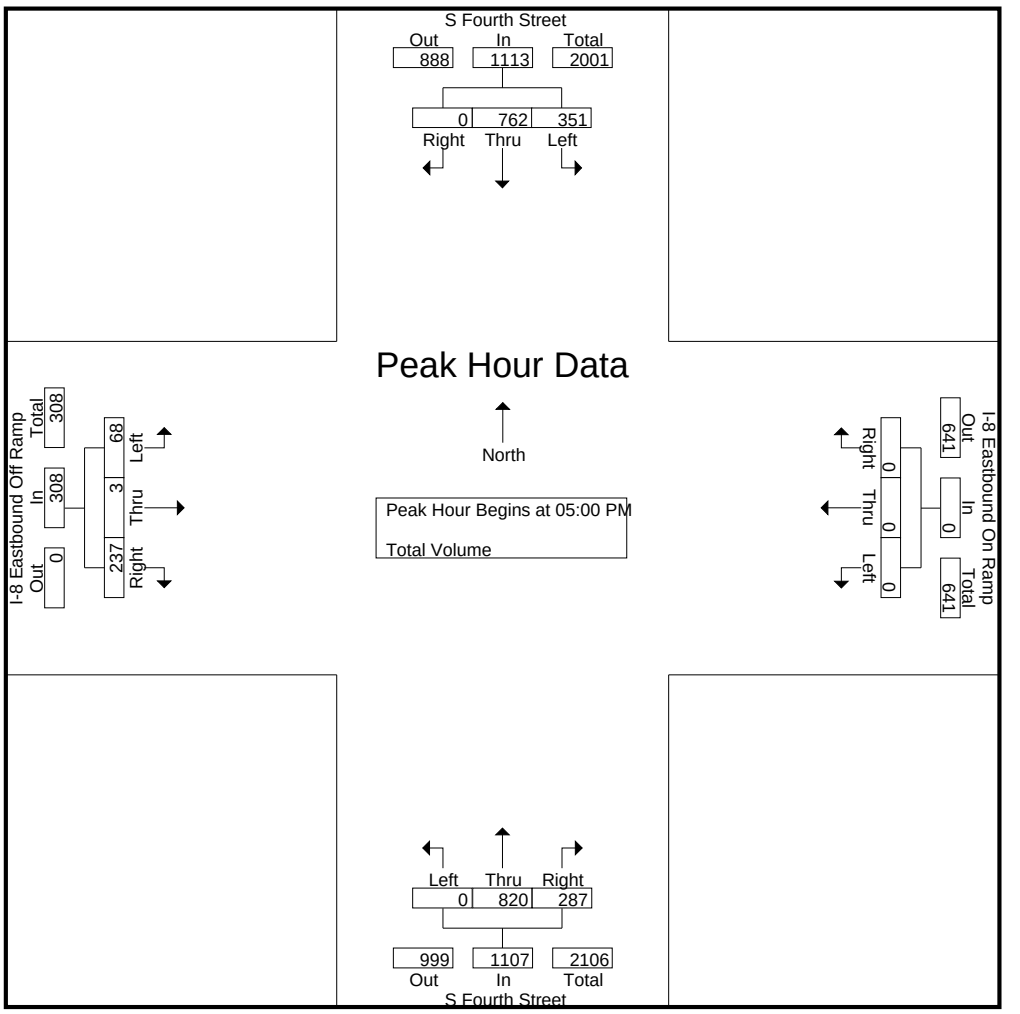

Peak Hour Analysis From 04:00 PM to 05:45 PM - Peak 1 of 1
Peak Hour for Each Approach Begins at:

	04:30 PM				04:00 PM				05:00 PM				04:00 PM			
+0 mins.	96	176	0	272	0	0	0	0	0	**248**	**99**	**347**	20	0	**72**	**92**
+15 mins.	76	187	0	263	0	0	0	0	0	220	76	296	**24**	**1**	64	89
+30 mins.	72	198	0	270	0	0	0	0	0	166	63	229	11	0	67	78
+45 mins.	**114**	**223**	0	**337**	0	0	0	0	0	186	49	235	8	1	66	75
Total Volume	358	784	0	1142	0	0	0	0	0	820	287	1107	63	2	269	334
% App. Total	31.3	68.7	0		0	0	0		0	74.1	25.9		18.9	0.6	80.5	
PHF	.785	.879	.000	.847	.000	.000	.000	.000	.000	.827	.725	.798	.656	.500	.934	.908

Counts Unlimited, Inc.
PO Box 1178
Corona, CA 92878
(951) 268-6268

City of El Centro
N/S: S Fourth Street (SR-86)
E/W: Wake Avenue
Weather: Clear

File Name : 05_ECO_SR86_Wake AM
Site Code : 05724265
Start Date : 3/21/2024
Page No : 1

Groups Printed- Total Volume

	S Fourth Street Southbound				Wake Avenue Westbound				S Fourth Street Northbound				Wake Avenue Eastbound				
Start Time	Left	Thru	Right	App. Total	Left	Thru	Right	App. Total	Left	Thru	Right	App. Total	Left	Thru	Right	App. Total	Int. Total
07:00 AM	56	30	23	109	3	4	25	32	5	40	8	53	21	9	6	36	230
07:15 AM	56	59	27	142	6	6	23	35	7	59	15	81	44	13	14	71	329
07:30 AM	57	62	28	147	11	5	40	56	9	105	13	127	42	10	11	63	393
07:45 AM	90	141	56	287	7	13	33	53	15	94	14	123	34	25	32	91	554
Total	259	292	134	685	27	28	121	176	36	298	50	384	141	57	63	261	1506
08:00 AM	88	111	45	244	7	15	45	67	14	73	13	100	41	18	14	73	484
08:15 AM	87	65	34	186	16	11	41	68	18	71	14	103	33	17	13	63	420
08:30 AM	84	70	44	198	12	20	49	81	17	62	19	98	28	14	8	50	427
08:45 AM	88	72	39	199	5	8	49	62	15	61	19	95	25	18	19	62	418
Total	347	318	162	827	40	54	184	278	64	267	65	396	127	67	54	248	1749
Grand Total	606	610	296	1512	67	82	305	454	100	565	115	780	268	124	117	509	3255
Apprch %	40.1	40.3	19.6		14.8	18.1	67.2		12.8	72.4	14.7		52.7	24.4	23		
Total %	18.6	18.7	9.1	46.5	2.1	2.5	9.4	13.9	3.1	17.4	3.5	24	8.2	3.8	3.6	15.6	

	S Fourth Street Southbound				Wake Avenue Westbound				S Fourth Street Northbound				Wake Avenue Eastbound				
Start Time	Left	Thru	Right	App. Total	Left	Thru	Right	App. Total	Left	Thru	Right	App. Total	Left	Thru	Right	App. Total	Int. Total
Peak Hour Analysis From 07:00 AM to 08:45 AM - Peak 1 of 1																	
Peak Hour for Entire Intersection Begins at 07:45 AM																	
07:45 AM	**90**	**141**	**56**	**287**	7	13	33	53	15	**94**	14	**123**	34	**25**	**32**	**91**	**554**
08:00 AM	88	111	45	244	7	15	45	67	14	73	13	100	**41**	18	14	73	484
08:15 AM	87	65	34	186	**16**	11	41	68	**18**	71	14	103	33	17	13	63	420
08:30 AM	84	70	44	198	12	**20**	**49**	**81**	17	62	**19**	98	28	14	8	50	427
Total Volume	349	387	179	915	42	59	168	269	64	300	60	424	136	74	67	277	1885
% App. Total	38.1	42.3	19.6		15.6	21.9	62.5		15.1	70.8	14.2		49.1	26.7	24.2		
PHF	.969	.686	.799	.797	.656	.738	.857	.830	.889	.798	.789	.862	.829	.740	.523	.761	.851

Counts Unlimited, Inc.
PO Box 1178
Corona, CA 92878
(951) 268-6268

City of El Centro
N/S: S Fourth Street (SR-86)
E/W: Wake Avenue
Weather: Clear

File Name : 05_ECO_SR86_Wake AM
Site Code : 05724265
Start Date : 3/21/2024
Page No : 2

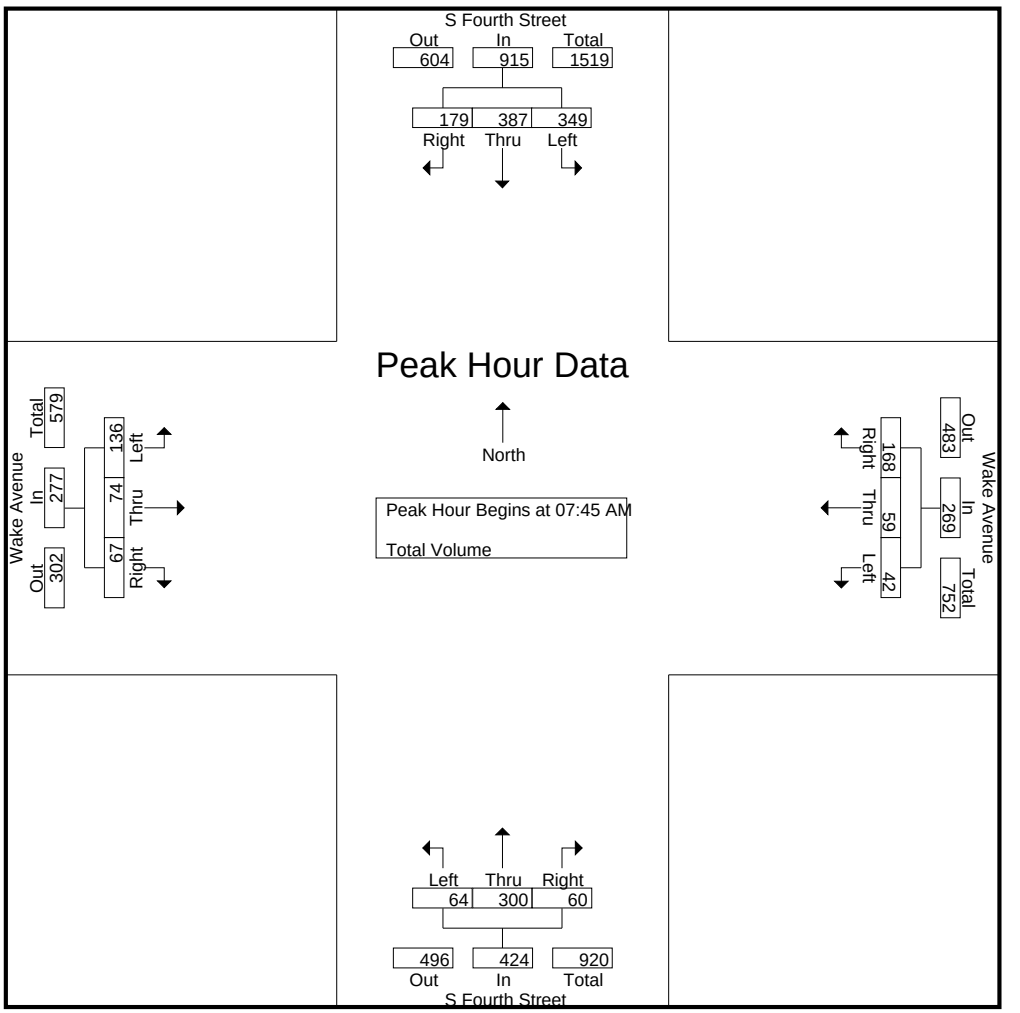

Peak Hour Analysis From 07:00 AM to 08:45 AM - Peak 1 of 1
Peak Hour for Each Approach Begins at:

	07:45 AM				08:00 AM				07:30 AM				07:15 AM			
+0 mins.	**90**	**141**	**56**	**287**	7	15	45	67	9	**105**	13	**127**	**44**	13	14	71
+15 mins.	88	111	45	244	**16**	11	41	68	15	94	**14**	123	42	10	11	63
+30 mins.	87	65	34	186	12	**20**	**49**	**81**	14	73	13	100	34	**25**	**32**	**91**
+45 mins.	84	70	44	198	5	8	49	62	**18**	71	14	103	41	18	14	73
Total Volume	349	387	179	915	40	54	184	278	56	343	54	453	161	66	71	298
% App. Total	38.1	42.3	19.6		14.4	19.4	66.2		12.4	75.7	11.9		54	22.1	23.8	
PHF	.969	.686	.799	.797	.625	.675	.939	.858	.778	.817	.964	.892	.915	.660	.555	.819

Counts Unlimited, Inc.
PO Box 1178
Corona, CA 92878
(951) 268-6268

City of El Centro
N/S: S Fourth Street (SR-86)
E/W: Wake Avenue
Weather: Clear

File Name : 05_ECO_SR86_Wake PM
Site Code : 05724265
Start Date : 3/21/2024
Page No : 1

Groups Printed- Total Volume

	S Fourth Street Southbound				Wake Avenue Westbound				S Fourth Street Northbound				Wake Avenue Eastbound				
Start Time	Left	Thru	Right	App. Total	Left	Thru	Right	App. Total	Left	Thru	Right	App. Total	Left	Thru	Right	App. Total	Int. Total
04:00 PM	91	133	49	273	16	16	50	82	32	64	17	113	47	22	23	92	560
04:15 PM	86	101	48	235	29	9	55	93	27	68	19	114	49	9	22	80	522
04:30 PM	74	105	53	232	21	13	61	95	34	67	10	111	42	16	34	92	530
04:45 PM	92	111	39	242	9	13	56	78	29	77	14	120	45	19	35	99	539
Total	343	450	189	982	75	51	222	348	122	276	60	458	183	66	114	363	2151
05:00 PM	96	108	32	236	24	26	99	149	43	156	16	215	57	21	37	115	715
05:15 PM	113	129	51	293	18	16	87	121	37	127	14	178	51	17	30	98	690
05:30 PM	95	103	28	226	17	12	66	95	29	84	11	124	49	17	33	99	544
05:45 PM	63	100	40	203	18	17	65	100	25	80	16	121	55	21	22	98	522
Total	367	440	151	958	77	71	317	465	134	447	57	638	212	76	122	410	2471
Grand Total	710	890	340	1940	152	122	539	813	256	723	117	1096	395	142	236	773	4622
Apprch %	36.6	45.9	17.5		18.7	15	66.3		23.4	66	10.7		51.1	18.4	30.5		
Total %	15.4	19.3	7.4	42	3.3	2.6	11.7	17.6	5.5	15.6	2.5	23.7	8.5	3.1	5.1	16.7	

	S Fourth Street Southbound				Wake Avenue Westbound				S Fourth Street Northbound				Wake Avenue Eastbound				
Start Time	Left	Thru	Right	App. Total	Left	Thru	Right	App. Total	Left	Thru	Right	App. Total	Left	Thru	Right	App. Total	Int. Total
Peak Hour Analysis From 04:00 PM to 05:45 PM - Peak 1 of 1																	
Peak Hour for Entire Intersection Begins at 04:45 PM																	
04:45 PM	92	111	39	242	9	13	56	78	29	77	14	120	45	19	35	99	539
05:00 PM	96	108	32	236	**24**	**26**	**99**	**149**	**43**	**156**	**16**	**215**	**57**	**21**	**37**	**115**	**715**
05:15 PM	**113**	**129**	**51**	**293**	18	16	87	121	37	127	14	178	51	17	30	98	690
05:30 PM	95	103	28	226	17	12	66	95	29	84	11	124	49	17	33	99	544
Total Volume	396	451	150	997	68	67	308	443	138	444	55	637	202	74	135	411	2488
% App. Total	39.7	45.2	15		15.3	15.1	69.5		21.7	69.7	8.6		49.1	18	32.8		
PHF	.876	.874	.735	.851	.708	.644	.778	.743	.802	.712	.859	.741	.886	.881	.912	.893	.870

Counts Unlimited, Inc.
PO Box 1178
Corona, CA 92878
(951) 268-6268

City of El Centro
N/S: S Fourth Street (SR-86)
E/W: Wake Avenue
Weather: Clear

File Name : 05_ECO_SR86_Wake PM
Site Code : 05724265
Start Date : 3/21/2024
Page No : 2

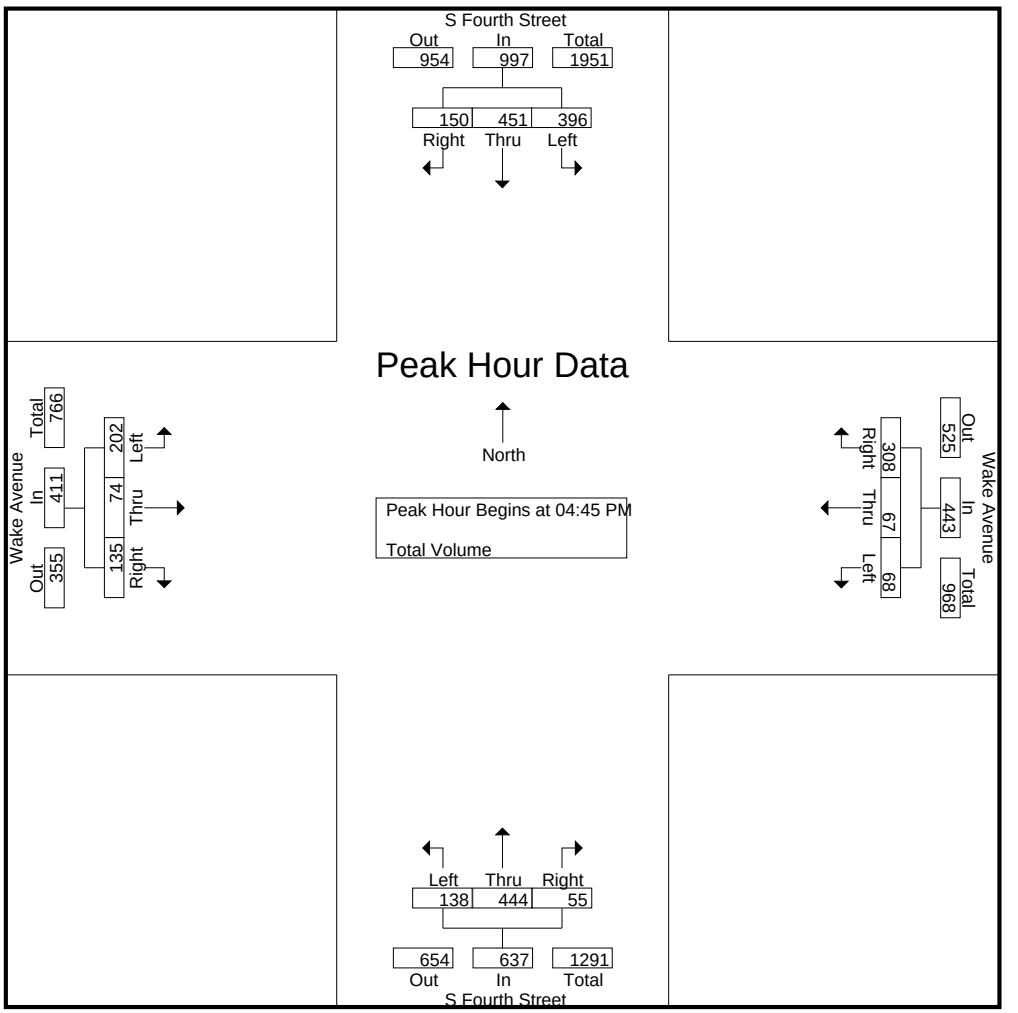

Peak Hour Analysis From 04:00 PM to 05:45 PM - Peak 1 of 1
Peak Hour for Each Approach Begins at:

	04:30 PM				05:00 PM				05:00 PM				04:45 PM			
+0 mins.	74	105	**53**	232	**24**	**26**	**99**	**149**	**43**	**156**	**16**	**215**	45	19	35	99
+15 mins.	92	111	39	242	18	16	87	121	37	127	14	178	**57**	**21**	**37**	**115**
+30 mins.	96	108	32	236	17	12	66	95	29	84	11	124	51	17	30	98
+45 mins.	**113**	**129**	51	**293**	18	17	65	100	25	80	16	121	49	17	33	99
Total Volume	375	453	175	1003	77	71	317	465	134	447	57	638	202	74	135	411
% App. Total	37.4	45.2	17.4		16.6	15.3	68.2		21	70.1	8.9		49.1	18	32.8	
PHF	.830	.878	.825	.856	.802	.683	.801	.780	.779	.716	.891	.742	.886	.881	.912	.893

Counts Unlimited, Inc.
PO Box 1178
Corona, CA 92878
(951) 268-6268

City of El Centro
N/S: Dogwood Road
E/W: I-8 Westbound Ramps
Weather: Clear

File Name : 06_ECO_Dog_8W AM
Site Code : 05724265
Start Date : 3/21/2024
Page No : 1

Groups Printed- Total Volume

	Dogwood Road Southbound				I-8 Westbound Ramps Westbound				Dogwood Road Northbound				I-8 Westbound On Ramp Eastbound				
Start Time	Left	Thru	Right	App. Total	Left	Thru	Right	App. Total	Left	Thru	Right	App. Total	Left	Thru	Right	App. Total	Int. Total
07:00 AM	0	48	6	54	8	0	27	35	0	60	32	92	0	0	0	0	181
07:15 AM	0	70	15	85	13	0	27	40	0	99	27	126	0	0	0	0	251
07:30 AM	0	84	34	118	19	0	27	46	0	117	51	168	0	0	0	0	332
07:45 AM	0	108	22	130	35	0	37	72	0	129	49	178	0	0	0	0	380
Total	0	310	77	387	75	0	118	193	0	405	159	564	0	0	0	0	1144
08:00 AM	0	85	11	96	22	0	32	54	0	108	30	138	0	0	0	0	288
08:15 AM	0	66	17	83	14	1	17	32	0	101	23	124	0	0	0	0	239
08:30 AM	0	153	34	187	23	0	11	34	0	76	28	104	0	0	0	0	325
08:45 AM	0	68	19	87	22	0	18	40	0	83	25	108	0	0	0	0	235
Total	0	372	81	453	81	1	78	160	0	368	106	474	0	0	0	0	1087
Grand Total	0	682	158	840	156	1	196	353	0	773	265	1038	0	0	0	0	2231
Apprch %	0	81.2	18.8		44.2	0.3	55.5		0	74.5	25.5		0	0	0		
Total %	0	30.6	7.1	37.7	7	0	8.8	15.8	0	34.6	11.9	46.5	0	0	0	0	

	Dogwood Road Southbound				I-8 Westbound Ramps Westbound				Dogwood Road Northbound				I-8 Westbound On Ramp Eastbound				
Start Time	Left	Thru	Right	App. Total	Left	Thru	Right	App. Total	Left	Thru	Right	App. Total	Left	Thru	Right	App. Total	Int. Total
Peak Hour Analysis From 07:00 AM to 08:45 AM - Peak 1 of 1																	
Peak Hour for Entire Intersection Begins at 07:15 AM																	
07:15 AM	0	70	15	85	13	0	27	40	0	99	27	126	0	0	0	0	251
07:30 AM	0	84	**34**	118	19	0	27	46	0	117	**51**	168	0	0	0	0	332
07:45 AM	0	**108**	22	**130**	**35**	0	**37**	**72**	0	**129**	49	**178**	0	0	0	0	**380**
08:00 AM	0	85	11	96	22	0	32	54	0	108	30	138	0	0	0	0	288
Total Volume	0	347	82	429	89	0	123	212	0	453	157	610	0	0	0	0	1251
% App. Total	0	80.9	19.1		42	0	58		0	74.3	25.7		0	0	0		
PHF	.000	.803	.603	.825	.636	.000	.831	.736	.000	.878	.770	.857	.000	.000	.000	.000	.823

Counts Unlimited, Inc.
PO Box 1178
Corona, CA 92878
(951) 268-6268

City of El Centro
N/S: Dogwood Road
E/W: I-8 Westbound Ramps
Weather: Clear

File Name : 06_ECO_Dog_8W AM
Site Code : 05724265
Start Date : 3/21/2024
Page No : 2

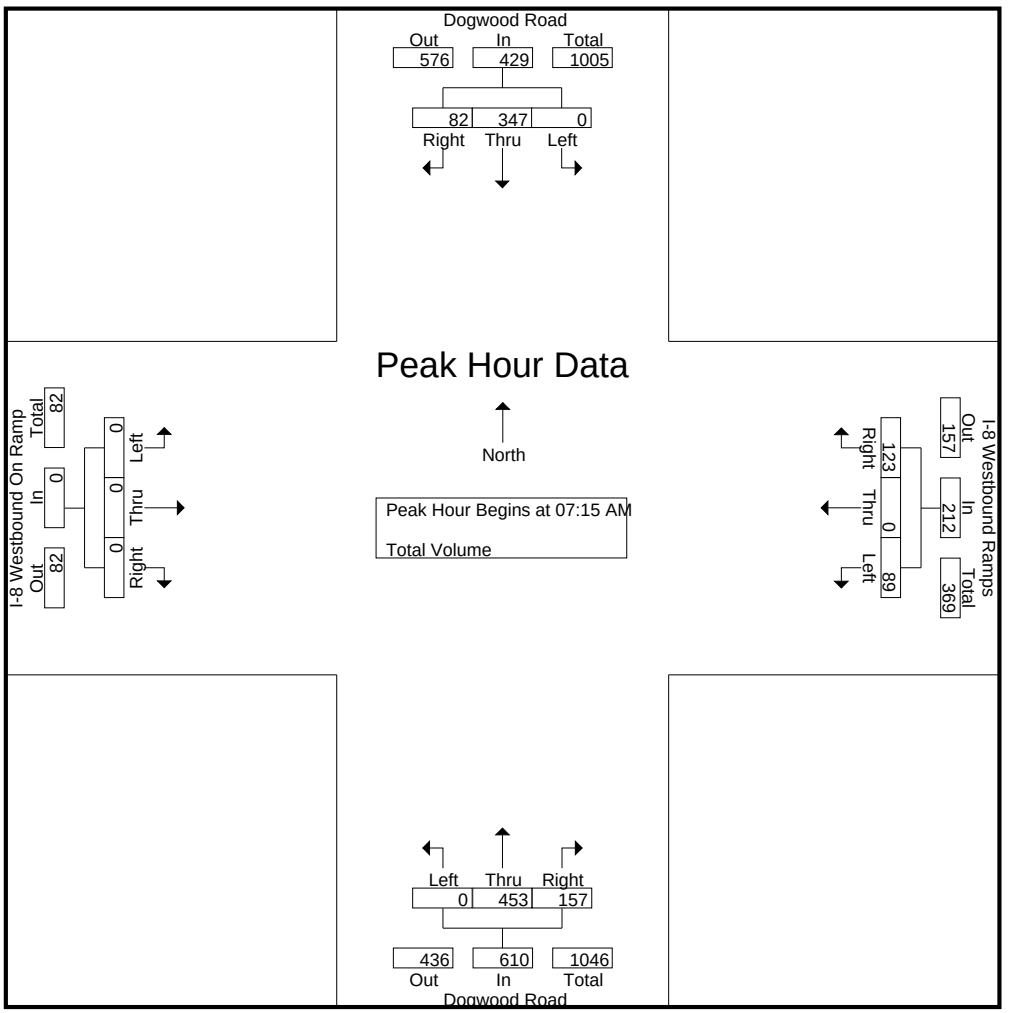

Peak Hour Analysis From 07:00 AM to 08:45 AM - Peak 1 of 1
Peak Hour for Each Approach Begins at:

	07:45 AM				07:15 AM				07:15 AM				07:00 AM			
+0 mins.	0	108	22	130	13	0	27	40	0	99	27	126	0	0	0	0
+15 mins.	0	85	11	96	19	0	27	46	0	117	**51**	168	0	0	0	0
+30 mins.	0	66	17	83	**35**	0	**37**	**72**	0	**129**	49	**178**	0	0	0	0
+45 mins.	0	**153**	**34**	**187**	22	0	32	54	0	108	30	138	0	0	0	0
Total Volume	0	412	84	496	89	0	123	212	0	453	157	610	0	0	0	0
% App. Total	0	83.1	16.9		42	0	58		0	74.3	25.7		0	0	0	
PHF	.000	.673	.618	.663	.636	.000	.831	.736	.000	.878	.770	.857	.000	.000	.000	.000

Counts Unlimited, Inc.
PO Box 1178
Corona, CA 92878
(951) 268-6268

City of El Centro
N/S: Dogwood Road
E/W: I-8 Westbound Ramps
Weather: Clear

File Name : 06_ECO_Dog_8W PM
Site Code : 05724265
Start Date : 3/21/2024
Page No : 1

Groups Printed- Total Volume

	Dogwood Road Southbound				I-8 Westbound Ramps Westbound				Dogwood Road Northbound				I-8 Westbound On Ramp Eastbound				
Start Time	Left	Thru	Right	App. Total	Left	Thru	Right	App. Total	Left	Thru	Right	App. Total	Left	Thru	Right	App. Total	Int. Total
04:00 PM	0	167	17	184	43	0	21	64	0	136	60	196	0	0	0	0	444
04:15 PM	0	146	15	161	38	0	16	54	0	127	71	198	0	0	0	0	413
04:30 PM	0	180	9	189	41	3	20	64	0	152	70	222	0	0	0	0	475
04:45 PM	0	130	20	150	40	1	18	59	0	118	68	186	0	0	0	0	395
Total	0	623	61	684	162	4	75	241	0	533	269	802	0	0	0	0	1727
05:00 PM	0	192	24	216	25	1	11	37	0	126	92	218	0	0	0	0	471
05:15 PM	0	157	13	170	35	1	8	44	0	144	59	203	0	0	0	0	417
05:30 PM	0	155	9	164	46	0	12	58	0	126	56	182	0	0	0	0	404
05:45 PM	0	120	11	131	27	0	11	38	0	136	58	194	0	0	0	0	363
Total	0	624	57	681	133	2	42	177	0	532	265	797	0	0	0	0	1655
Grand Total	0	1247	118	1365	295	6	117	418	0	1065	534	1599	0	0	0	0	3382
Apprch %	0	91.4	8.6		70.6	1.4	28		0	66.6	33.4		0	0	0		
Total %	0	36.9	3.5	40.4	8.7	0.2	3.5	12.4	0	31.5	15.8	47.3	0	0	0	0	

	Dogwood Road Southbound				I-8 Westbound Ramps Westbound				Dogwood Road Northbound				I-8 Westbound On Ramp Eastbound				
Start Time	Left	Thru	Right	App. Total	Left	Thru	Right	App. Total	Left	Thru	Right	App. Total	Left	Thru	Right	App. Total	Int. Total
Peak Hour Analysis From 04:00 PM to 05:45 PM - Peak 1 of 1																	
Peak Hour for Entire Intersection Begins at 04:30 PM																	
04:30 PM	0	180	9	189	**41**	**3**	**20**	**64**	0	**152**	70	**222**	0	0	0	0	**475**
04:45 PM	0	130	20	150	40	1	18	59	0	118	68	186	0	0	0	0	395
05:00 PM	0	**192**	**24**	**216**	25	1	11	37	0	126	**92**	218	0	0	0	0	471
05:15 PM	0	157	13	170	35	1	8	44	0	144	59	203	0	0	0	0	417
Total Volume	0	659	66	725	141	6	57	204	0	540	289	829	0	0	0	0	1758
% App. Total	0	90.9	9.1		69.1	2.9	27.9		0	65.1	34.9		0	0	0		
PHF	.000	.858	.688	.839	.860	.500	.713	.797	.000	.888	.785	.934	.000	.000	.000	.000	.925

Counts Unlimited, Inc.
PO Box 1178
Corona, CA 92878
(951) 268-6268

City of El Centro
N/S: Dogwood Road
E/W: I-8 Westbound Ramps
Weather: Clear

File Name : 06_ECO_Dog_8W PM
Site Code : 05724265
Start Date : 3/21/2024
Page No : 2

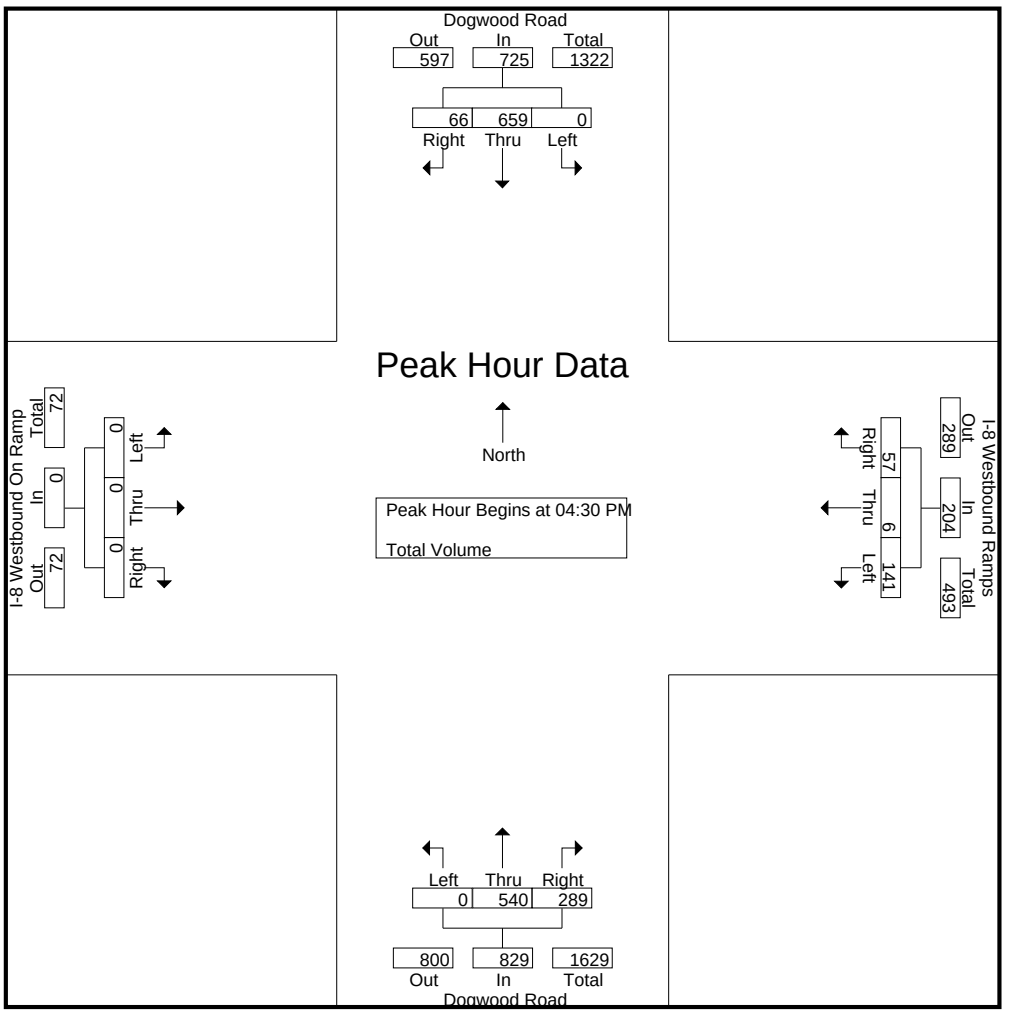

Peak Hour Analysis From 04:00 PM to 05:45 PM - Peak 1 of 1
Peak Hour for Each Approach Begins at:

	04:30 PM				04:00 PM				04:30 PM				04:00 PM			
+0 mins.	0	180	9	189	**43**	0	**21**	**64**	0	**152**	70	**222**	0	0	0	0
+15 mins.	0	130	20	150	38	0	16	54	0	118	68	186	0	0	0	0
+30 mins.	0	**192**	**24**	**216**	41	**3**	20	64	0	126	**92**	218	0	0	0	0
+45 mins.	0	157	13	170	40	1	18	59	0	144	59	203	0	0	0	0
Total Volume	0	659	66	725	162	4	75	241	0	540	289	829	0	0	0	0
% App. Total	0	90.9	9.1		67.2	1.7	31.1		0	65.1	34.9		0	0	0	
PHF	.000	.858	.688	.839	.942	.333	.893	.941	.000	.888	.785	.934	.000	.000	.000	.000

Counts Unlimited, Inc.
PO Box 1178
Corona, CA 92878
(951) 268-6268

City of El Centro
N/S: Dogwood Road
E/W: I-8 Eastbound Ramps
Weather: Clear

File Name : 07_ECO_Dog_8E AM
Site Code : 05724265
Start Date : 3/21/2024
Page No : 1

Groups Printed- Total Volume

	Dogwood Road Southbound				I-8 Eastbound On Ramp Westbound				Dogwood Road Northbound				I-8 Eastbound Off Ramp Eastbound				
Start Time	Left	Thru	Right	App. Total	Left	Thru	Right	App. Total	Left	Thru	Right	App. Total	Left	Thru	Right	App. Total	Int. Total
07:00 AM	13	45	0	58	0	0	0	0	0	77	14	91	10	0	12	22	171
07:15 AM	21	63	0	84	0	0	0	0	0	107	9	116	16	0	16	32	232
07:30 AM	16	84	0	100	0	0	0	0	0	150	14	164	18	0	33	51	315
07:45 AM	24	124	0	148	0	0	0	0	0	149	13	162	28	0	47	75	385
Total	74	316	0	390	0	0	0	0	0	483	50	533	72	0	108	180	1103
08:00 AM	13	92	0	105	0	0	0	0	0	114	14	128	15	0	51	66	299
08:15 AM	17	63	0	80	0	0	0	0	0	103	10	113	20	0	37	57	250
08:30 AM	32	85	0	117	0	0	0	0	0	99	15	114	12	0	43	55	286
08:45 AM	19	70	0	89	0	0	0	0	0	93	19	112	15	1	33	49	250
Total	81	310	0	391	0	0	0	0	0	409	58	467	62	1	164	227	1085
Grand Total	155	626	0	781	0	0	0	0	0	892	108	1000	134	1	272	407	2188
Apprch %	19.8	80.2	0		0	0	0		0	89.2	10.8		32.9	0.2	66.8		
Total %	7.1	28.6	0	35.7	0	0	0	0	0	40.8	4.9	45.7	6.1	0	12.4	18.6	

	Dogwood Road Southbound				I-8 Eastbound On Ramp Westbound				Dogwood Road Northbound				I-8 Eastbound Off Ramp Eastbound				
Start Time	Left	Thru	Right	App. Total	Left	Thru	Right	App. Total	Left	Thru	Right	App. Total	Left	Thru	Right	App. Total	Int. Total
Peak Hour Analysis From 07:00 AM to 08:45 AM - Peak 1 of 1																	
Peak Hour for Entire Intersection Begins at 07:30 AM																	
07:30 AM	16	84	0	100	0	0	0	0	0	**150**	**14**	**164**	18	0	33	51	315
07:45 AM	**24**	**124**	0	**148**	0	0	0	0	0	149	13	162	**28**	0	47	**75**	**385**
08:00 AM	13	92	0	105	0	0	0	0	0	114	14	128	15	0	**51**	66	299
08:15 AM	17	63	0	80	0	0	0	0	0	103	10	113	20	0	37	57	250
Total Volume	70	363	0	433	0	0	0	0	0	516	51	567	81	0	168	249	1249
% App. Total	16.2	83.8	0		0	0	0		0	91	9		32.5	0	67.5		
PHF	.729	.732	.000	.731	.000	.000	.000	.000	.000	.860	.911	.864	.723	.000	.824	.830	.811

Counts Unlimited, Inc.
PO Box 1178
Corona, CA 92878
(951) 268-6268

City of El Centro
N/S: Dogwood Road
E/W: I-8 Eastbound Ramps
Weather: Clear

File Name : 07_ECO_Dog_8E AM
Site Code : 05724265
Start Date : 3/21/2024
Page No : 2

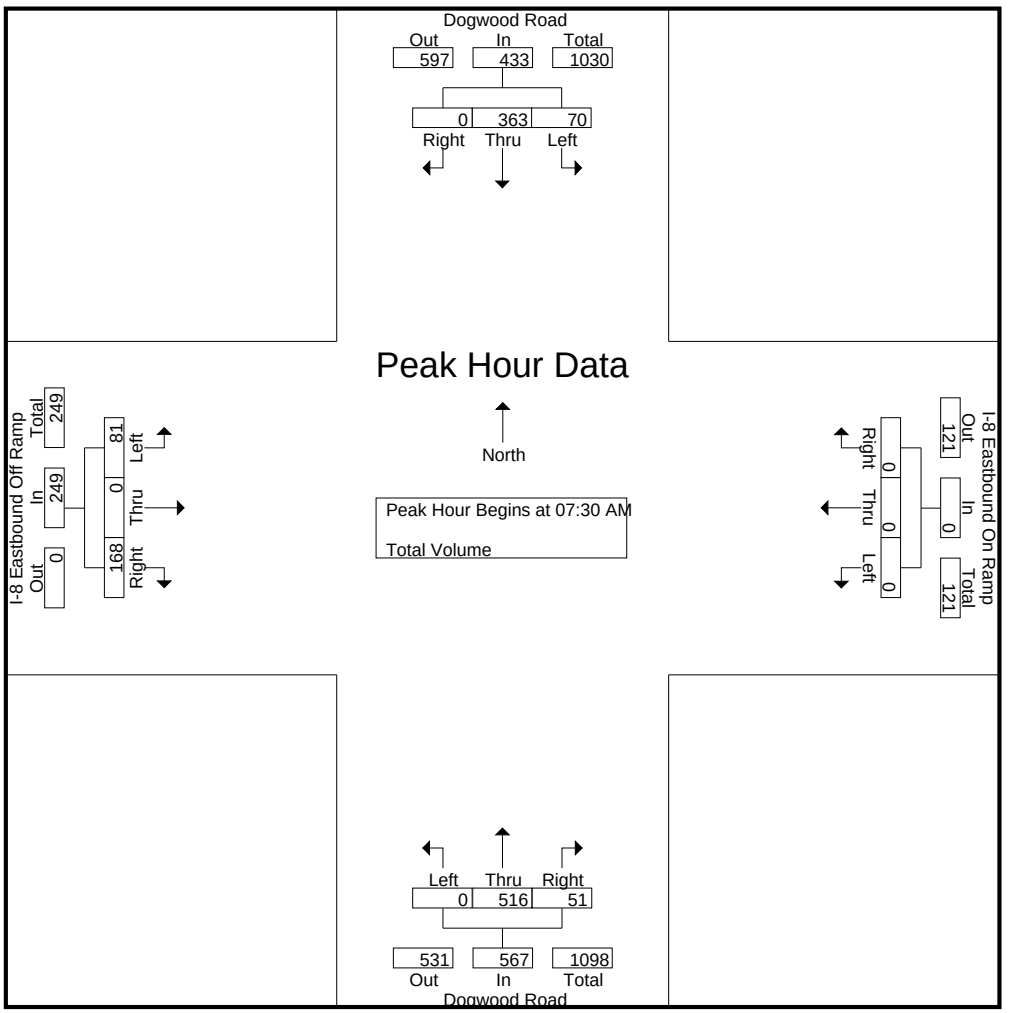

Peak Hour Analysis From 07:00 AM to 08:45 AM - Peak 1 of 1
Peak Hour for Each Approach Begins at:

	07:45 AM				07:00 AM				07:15 AM				07:45 AM			
+0 mins.	24	**124**	0	**148**	0	0	0	0	0	107	9	116	**28**	0	47	**75**
+15 mins.	13	92	0	105	0	0	0	0	0	**150**	**14**	**164**	15	0	**51**	66
+30 mins.	17	63	0	80	0	0	0	0	0	149	13	162	20	0	37	57
+45 mins.	**32**	85	0	117	0	0	0	0	0	114	14	128	12	0	43	55
Total Volume	86	364	0	450	0	0	0	0	0	520	50	570	75	0	178	253
% App. Total	19.1	80.9	0		0	0	0		0	91.2	8.8		29.6	0	70.4	
PHF	.672	.734	.000	.760	.000	.000	.000	.000	.000	.867	.893	.869	.670	.000	.873	.843

Counts Unlimited, Inc.
PO Box 1178
Corona, CA 92878
(951) 268-6268

City of El Centro
N/S: Dogwood Road
E/W: I-8 Eastbound Ramps
Weather: Clear

File Name : 07_ECO_Dog_8E PM
Site Code : 05724265
Start Date : 3/21/2024
Page No : 1

Groups Printed- Total Volume

	Dogwood Road Southbound				I-8 Eastbound On Ramp Westbound				Dogwood Road Northbound				I-8 Eastbound Off Ramp Eastbound				
Start Time	Left	Thru	Right	App. Total	Left	Thru	Right	App. Total	Left	Thru	Right	App. Total	Left	Thru	Right	App. Total	Int. Total
04:00 PM	28	191	0	219	0	0	0	0	0	176	60	236	13	0	87	100	555
04:15 PM	30	157	0	187	0	0	0	0	0	173	40	213	12	0	101	113	513
04:30 PM	30	197	0	227	0	0	0	0	0	204	58	262	16	0	86	102	591
04:45 PM	22	151	0	173	0	0	0	0	0	186	51	237	7	0	75	82	492
Total	110	696	0	806	0	0	0	0	0	739	209	948	48	0	349	397	2151
05:00 PM	41	178	0	219	0	0	0	0	0	204	49	253	11	0	97	108	580
05:15 PM	22	176	0	198	0	0	0	0	0	204	43	247	12	0	107	119	564
05:30 PM	31	179	0	210	0	0	0	0	0	166	48	214	10	0	110	120	544
05:45 PM	14	130	0	144	0	0	0	0	0	178	47	225	9	1	103	113	482
Total	108	663	0	771	0	0	0	0	0	752	187	939	42	1	417	460	2170
Grand Total	218	1359	0	1577	0	0	0	0	0	1491	396	1887	90	1	766	857	4321
Apprch %	13.8	86.2	0		0	0	0		0	79	21		10.5	0.1	89.4		
Total %	5	31.5	0	36.5	0	0	0	0	0	34.5	9.2	43.7	2.1	0	17.7	19.8	

	Dogwood Road Southbound				I-8 Eastbound On Ramp Westbound				Dogwood Road Northbound				I-8 Eastbound Off Ramp Eastbound				
Start Time	Left	Thru	Right	App. Total	Left	Thru	Right	App. Total	Left	Thru	Right	App. Total	Left	Thru	Right	App. Total	Int. Total
Peak Hour Analysis From 04:00 PM to 05:45 PM - Peak 1 of 1																	
Peak Hour for Entire Intersection Begins at 04:30 PM																	
04:30 PM	30	**197**	0	**227**	0	0	0	0	0	**204**	**58**	**262**	**16**	0	86	102	**591**
04:45 PM	22	151	0	173	0	0	0	0	0	186	51	237	7	0	75	82	492
05:00 PM	**41**	178	0	219	0	0	0	0	0	204	49	253	11	0	97	108	580
05:15 PM	22	176	0	198	0	0	0	0	0	204	43	247	12	0	**107**	**119**	564
Total Volume	115	702	0	817	0	0	0	0	0	798	201	999	46	0	365	411	2227
% App. Total	14.1	85.9	0		0	0	0		0	79.9	20.1		11.2	0	88.8		
PHF	.701	.891	.000	.900	.000	.000	.000	.000	.000	.978	.866	.953	.719	.000	.853	.863	.942

Counts Unlimited, Inc.
PO Box 1178
Corona, CA 92878
(951) 268-6268

City of El Centro
N/S: Dogwood Road
E/W: I-8 Eastbound Ramps
Weather: Clear

File Name : 07_ECO_Dog_8E PM
Site Code : 05724265
Start Date : 3/21/2024
Page No : 2

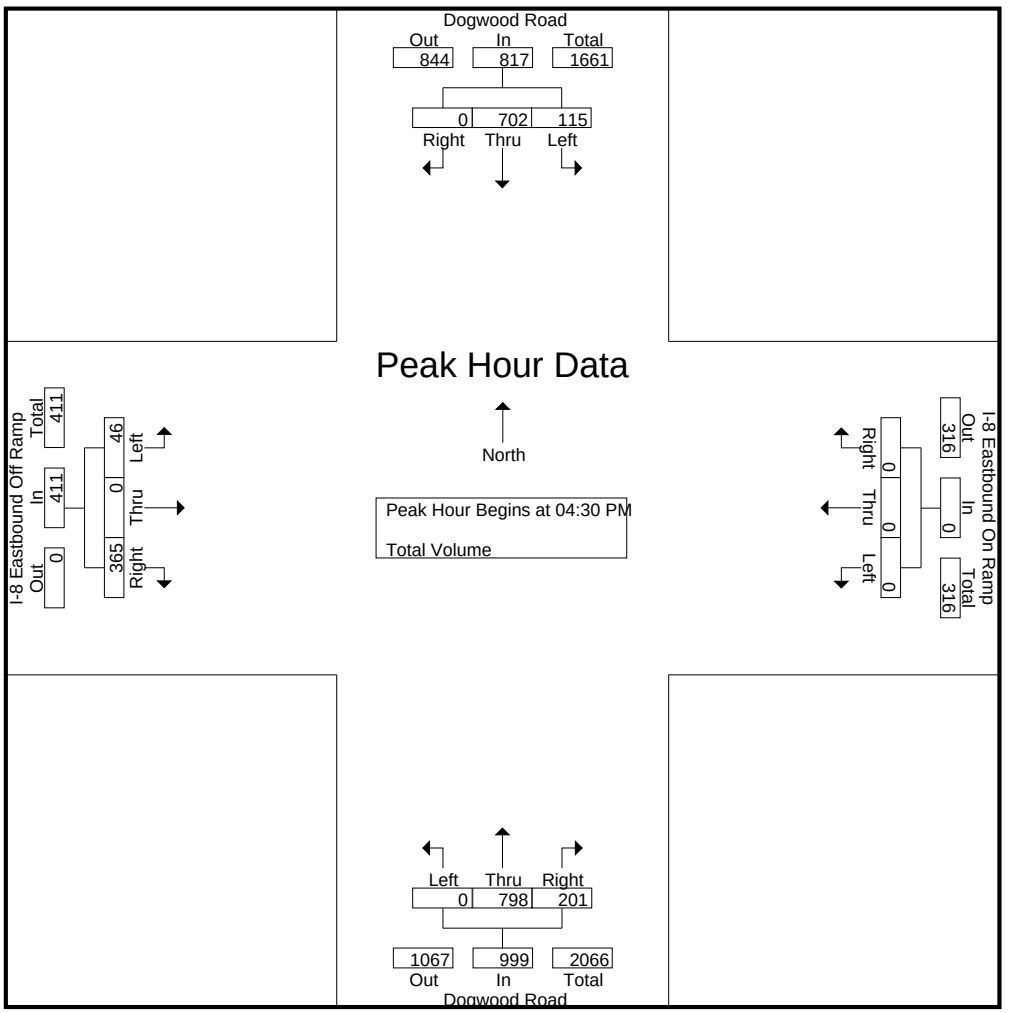

Peak Hour Analysis From 04:00 PM to 05:45 PM - Peak 1 of 1
Peak Hour for Each Approach Begins at:

	04:30 PM				04:00 PM				04:30 PM				05:00 PM			
+0 mins.	30	**197**	0	**227**	0	0	0	0	0	**204**	**58**	**262**	11	0	97	108
+15 mins.	22	151	0	173	0	0	0	0	0	186	51	237	**12**	0	107	119
+30 mins.	**41**	178	0	219	0	0	0	0	0	204	49	253	10	0	**110**	**120**
+45 mins.	22	176	0	198	0	0	0	0	0	204	43	247	9	**1**	103	113
Total Volume	115	702	0	817	0	0	0	0	0	798	201	999	42	1	417	460
% App. Total	14.1	85.9	0		0	0	0		0	79.9	20.1		9.1	0.2	90.7	
PHF	.701	.891	.000	.900	.000	.000	.000	.000	.000	.978	.866	.953	.875	.250	.948	.958

Counts Unlimited, Inc.
PO Box 1178
Corona, CA 92878
(951) 268-6268

City of El Centro
N/S: S Fourth Street (SR-86)/SR-86
E/W: Dananberg Drive
Weather: Clear

File Name : 08_ECO_SR86_Dane AM
Site Code : 05724265
Start Date : 3/21/2024
Page No : 1

Groups Printed- Total Volume

	S Fourth Street Southbound			Dananberg Drive Westbound			S Fourth Street Northbound			
Start Time	Left	Thru	App. Total	Left	Right	App. Total	Thru	Right	App. Total	Int. Total
07:00 AM	6	25	31	4	7	11	43	8	51	93
07:15 AM	6	50	56	2	10	12	81	4	85	153
07:30 AM	10	48	58	3	18	21	119	6	125	204
07:45 AM	24	50	74	1	19	20	116	27	143	237
Total	46	173	219	10	54	64	359	45	404	687
08:00 AM	17	52	69	4	11	15	88	12	100	184
08:15 AM	21	62	83	3	17	20	71	5	76	179
08:30 AM	12	59	71	5	22	27	73	5	78	176
08:45 AM	23	42	65	6	19	25	70	8	78	168
Total	73	215	288	18	69	87	302	30	332	707
Grand Total	119	388	507	28	123	151	661	75	736	1394
Apprch %	23.5	76.5		18.5	81.5		89.8	10.2		
Total %	8.5	27.8	36.4	2	8.8	10.8	47.4	5.4	52.8	

	S Fourth Street Southbound			Dananberg Drive Westbound			S Fourth Street Northbound			
Start Time	Left	Thru	App. Total	Left	Right	App. Total	Thru	Right	App. Total	Int. Total
Peak Hour Analysis From 07:00 AM to 08:45 AM - Peak 1 of 1										
Peak Hour for Entire Intersection Begins at 07:30 AM										
07:30 AM	10	48	58	3	18	**21**	**119**	6	125	204
07:45 AM	**24**	50	74	1	**19**	20	116	**27**	**143**	**237**
08:00 AM	17	52	69	**4**	11	15	88	12	100	184
08:15 AM	21	**62**	**83**	3	17	20	71	5	76	179
Total Volume	72	212	284	11	65	76	394	50	444	804
% App. Total	25.4	74.6		14.5	85.5		88.7	11.3		
PHF	.750	.855	.855	.688	.855	.905	.828	.463	.776	.848

Counts Unlimited, Inc.
PO Box 1178
Corona, CA 92878
(951) 268-6268

City of El Centro
N/S: S Fourth Street (SR-86)/SR-86
E/W: Dananberg Drive
Weather: Clear

File Name : 08_ECO_SR86_Dane AM
Site Code : 05724265
Start Date : 3/21/2024
Page No : 2

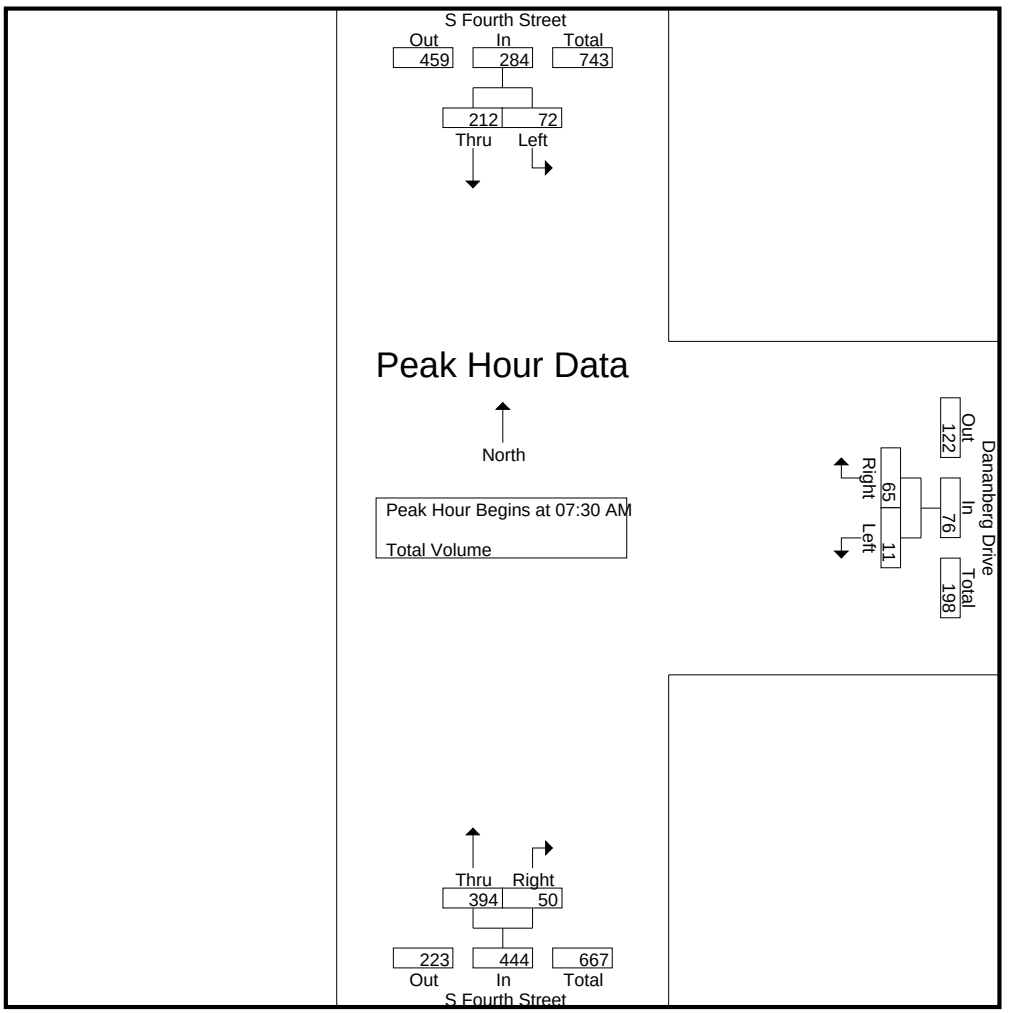

Peak Hour Analysis From 07:00 AM to 08:45 AM - Peak 1 of 1
Peak Hour for Each Approach Begins at:

	07:45 AM			08:00 AM			07:15 AM		
+0 mins.	**24**	50	74	4	11	15	81	4	85
+15 mins.	17	52	69	3	17	20	**119**	6	125
+30 mins.	21	**62**	**83**	5	**22**	**27**	116	**27**	**143**
+45 mins.	12	59	71	**6**	19	25	88	12	100
Total Volume	74	223	297	18	69	87	404	49	453
% App. Total	24.9	75.1		20.7	79.3		89.2	10.8	
PHF	.771	.899	.895	.750	.784	.806	.849	.454	.792

Counts Unlimited, Inc.
PO Box 1178
Corona, CA 92878
(951) 268-6268

City of El Centro
N/S: S Fourth Street (SR-86)/SR-86
E/W: Dananberg Drive
Weather: Clear

File Name : 08_ECO_SR86_Dane PM
Site Code : 05724265
Start Date : 3/21/2024
Page No : 1

Groups Printed- Total Volume

	S Fourth Street Southbound			Dananberg Drive Westbound			S Fourth Street Northbound			
Start Time	Left	Thru	App. Total	Left	Right	App. Total	Thru	Right	App. Total	Int. Total
04:00 PM	41	123	164	10	42	52	57	7	64	280
04:15 PM	33	101	134	12	41	53	66	13	79	266
04:30 PM	47	102	149	14	28	42	59	9	68	259
04:45 PM	49	105	154	13	35	48	62	20	82	284
Total	170	431	601	49	146	195	244	49	293	1089
05:00 PM	46	109	155	54	95	149	63	12	75	379
05:15 PM	47	119	166	15	48	63	68	8	76	305
05:30 PM	46	97	143	21	38	59	50	19	69	271
05:45 PM	35	105	140	13	41	54	60	20	80	274
Total	174	430	604	103	222	325	241	59	300	1229
Grand Total	344	861	1205	152	368	520	485	108	593	2318
Apprch %	28.5	71.5		29.2	70.8		81.8	18.2		
Total %	14.8	37.1	52	6.6	15.9	22.4	20.9	4.7	25.6	

	S Fourth Street Southbound			Dananberg Drive Westbound			S Fourth Street Northbound			
Start Time	Left	Thru	App. Total	Left	Right	App. Total	Thru	Right	App. Total	Int. Total
Peak Hour Analysis From 04:00 PM to 05:45 PM - Peak 1 of 1										
Peak Hour for Entire Intersection Begins at 04:45 PM										
04:45 PM	**49**	105	154	13	35	48	62	**20**	**82**	284
05:00 PM	46	109	155	**54**	**95**	**149**	63	12	75	**379**
05:15 PM	47	**119**	**166**	15	48	63	**68**	8	76	305
05:30 PM	46	97	143	21	38	59	50	19	69	271
Total Volume	188	430	618	103	216	319	243	59	302	1239
% App. Total	30.4	69.6		32.3	67.7		80.5	19.5		
PHF	.959	.903	.931	.477	.568	.535	.893	.738	.921	.817

Counts Unlimited, Inc.
PO Box 1178
Corona, CA 92878
(951) 268-6268

City of El Centro
N/S: S Fourth Street (SR-86)/SR-86
E/W: Dananberg Drive
Weather: Clear

File Name : 08_ECO_SR86_Dane PM
Site Code : 05724265
Start Date : 3/21/2024
Page No : 2

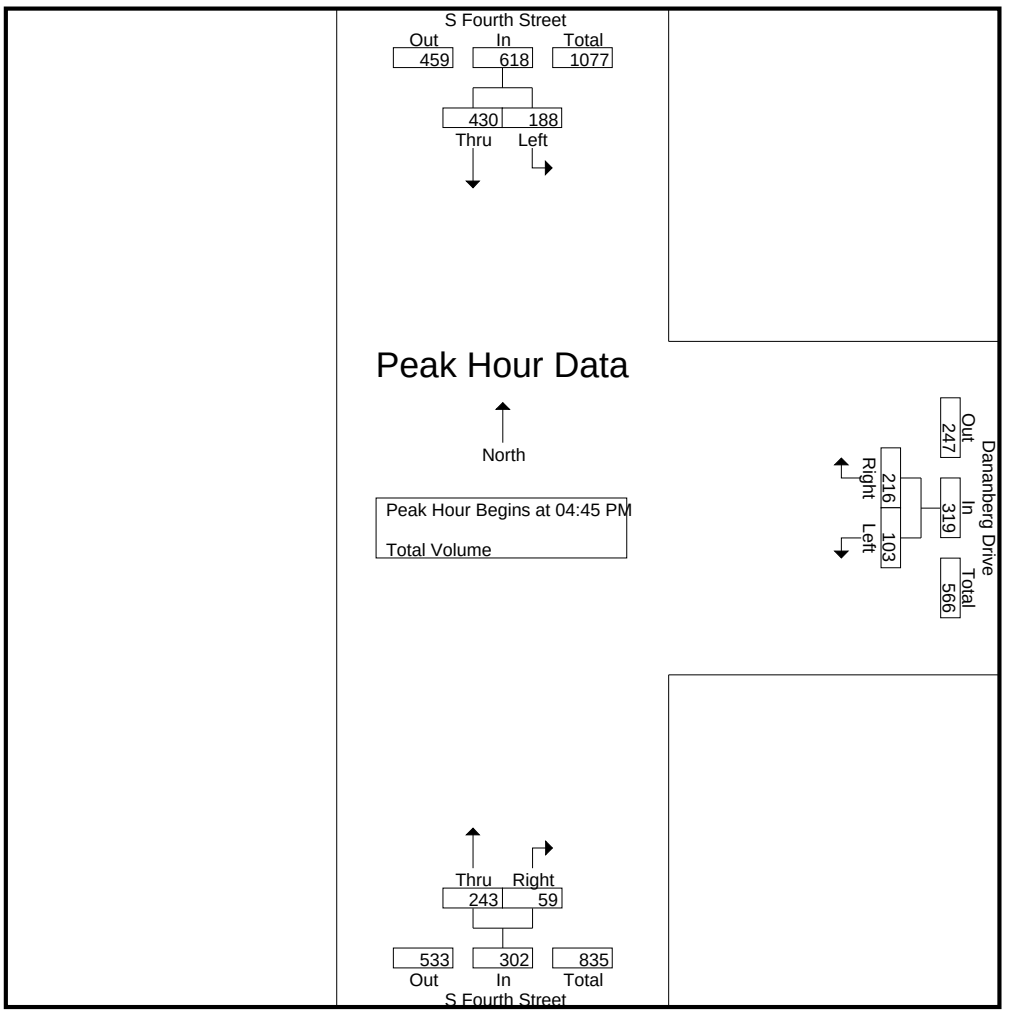

Peak Hour Analysis From 04:00 PM to 05:45 PM - Peak 1 of 1
Peak Hour for Each Approach Begins at:

	04:30 PM			05:00 PM			04:15 PM		
+0 mins.	47	102	149	**54**	**95**	**149**	**66**	13	79
+15 mins.	**49**	105	154	15	48	63	59	9	68
+30 mins.	46	109	155	21	38	59	62	**20**	**82**
+45 mins.	47	**119**	**166**	13	41	54	63	12	75
Total Volume	189	435	624	103	222	325	250	54	304
% App. Total	30.3	69.7		31.7	68.3		82.2	17.8	
PHF	.964	.914	.940	.477	.584	.545	.947	.675	.927

Counts Unlimited, Inc.
PO Box 1178
Corona, CA 92878
(951) 268-6268

City of El Centro
N/S: Farnsworth Lane
E/W: Dananberg Drive
Weather: Clear

File Name : 09_ECO_Farn_Dane AM
Site Code : 05724265
Start Date : 3/21/2024
Page No : 1

Groups Printed- Total Volume

	Dananberg Drive Westbound			Farnsworth Lane Northbound			Dananberg Drive Eastbound			
Start Time	Left	Thru	App. Total	Left	Right	App. Total	Thru	Right	App. Total	Int. Total
07:00 AM	5	10	15	5	10	15	6	2	8	38
07:15 AM	1	18	19	8	11	19	8	1	9	47
07:30 AM	3	23	26	6	17	23	12	3	15	64
07:45 AM	1	60	61	11	7	18	19	5	24	103
Total	10	111	121	30	45	75	45	11	56	252
08:00 AM	4	22	26	6	8	14	22	2	24	64
08:15 AM	3	22	25	1	8	9	21	3	24	58
08:30 AM	9	22	31	1	9	10	20	0	20	61
08:45 AM	4	28	32	2	4	6	26	2	28	66
Total	20	94	114	10	29	39	89	7	96	249
Grand Total	30	205	235	40	74	114	134	18	152	501
Apprch %	12.8	87.2		35.1	64.9		88.2	11.8		
Total %	6	40.9	46.9	8	14.8	22.8	26.7	3.6	30.3	

	Dananberg Drive Westbound			Farnsworth Lane Northbound			Dananberg Drive Eastbound			
Start Time	Left	Thru	App. Total	Left	Right	App. Total	Thru	Right	App. Total	Int. Total
Peak Hour Analysis From 07:00 AM to 08:45 AM - Peak 1 of 1										
Peak Hour for Entire Intersection Begins at 07:30 AM										
07:30 AM	3	23	26	6	**17**	**23**	12	3	15	64
07:45 AM	1	**60**	**61**	**11**	7	18	19	**5**	**24**	**103**
08:00 AM	**4**	22	26	6	8	14	**22**	2	24	64
08:15 AM	3	22	25	1	8	9	21	3	24	58
Total Volume	11	127	138	24	40	64	74	13	87	289
% App. Total	8	92		37.5	62.5		85.1	14.9		
PHF	.688	.529	.566	.545	.588	.696	.841	.650	.906	.701

Counts Unlimited, Inc.
PO Box 1178
Corona, CA 92878
(951) 268-6268

City of El Centro
N/S: Farnsworth Lane
E/W: Dananberg Drive
Weather: Clear

File Name : 09_ECO_Farn_Dane AM
Site Code : 05724265
Start Date : 3/21/2024
Page No : 2

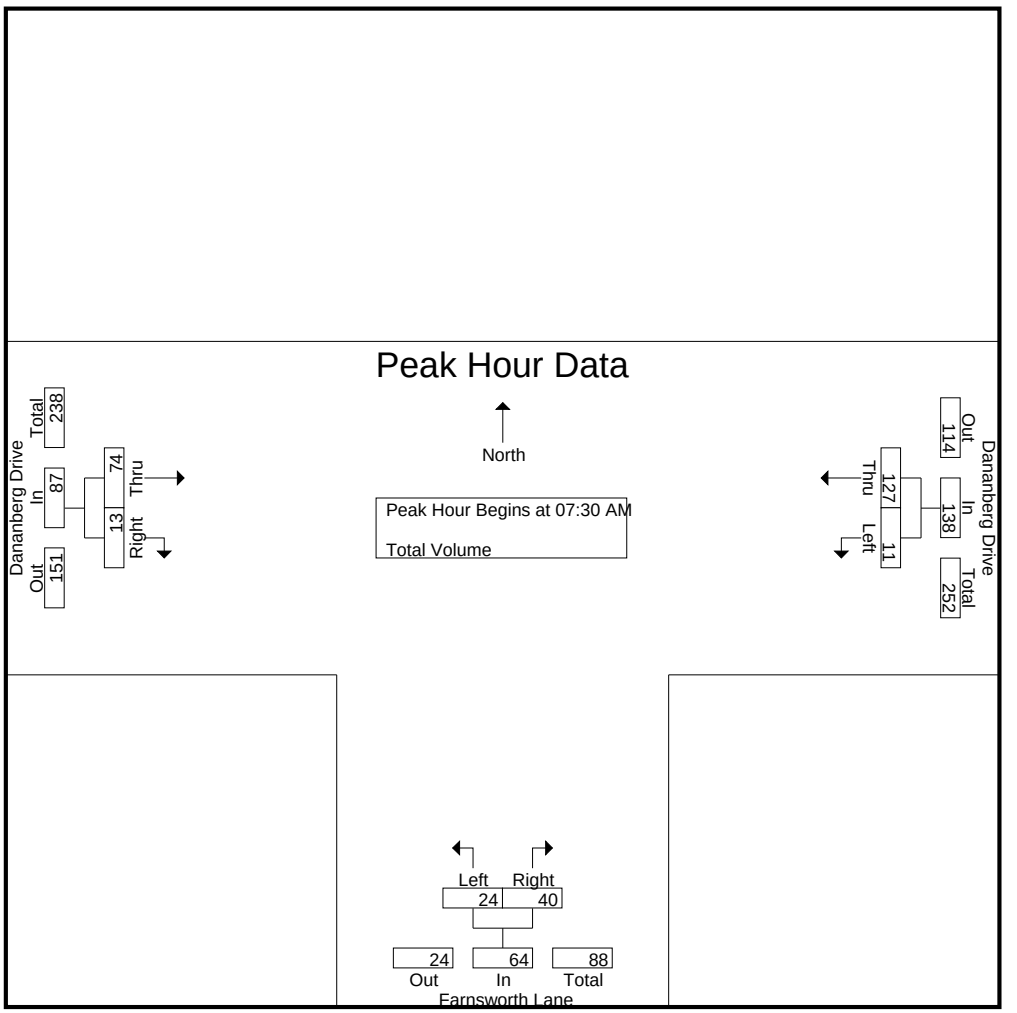

Peak Hour Analysis From 07:00 AM to 08:45 AM - Peak 1 of 1
Peak Hour for Each Approach Begins at:

	07:45 AM			07:00 AM			08:00 AM		
+0 mins.	1	**60**	**61**	5	10	15	22	2	24
+15 mins.	4	22	26	8	11	19	21	**3**	24
+30 mins.	3	22	25	6	**17**	**23**	20	0	20
+45 mins.	**9**	22	31	**11**	7	18	**26**	2	**28**
Total Volume	17	126	143	30	45	75	89	7	96
% App. Total	11.9	88.1		40	60		92.7	7.3	
PHF	.472	.525	.586	.682	.662	.815	.856	.583	.857

Counts Unlimited, Inc.
PO Box 1178
Corona, CA 92878
(951) 268-6268

City of El Centro
N/S: Farnsworth Lane
E/W: Dananberg Drive
Weather: Clear

File Name : 09_ECO_Farn_Dane PM
Site Code : 05724265
Start Date : 3/21/2024
Page No : 1

Groups Printed- Total Volume

	Dananberg Drive Westbound			Farnsworth Lane Northbound			Dananberg Drive Eastbound			
Start Time	Left	Thru	App. Total	Left	Right	App. Total	Thru	Right	App. Total	Int. Total
04:00 PM	15	48	63	3	11	14	52	4	56	133
04:15 PM	7	49	56	3	8	11	52	7	59	126
04:30 PM	13	44	57	0	5	5	63	4	67	129
04:45 PM	7	36	43	6	5	11	60	4	64	118
Total	42	177	219	12	29	41	227	19	246	506
05:00 PM	12	57	69	4	12	16	112	19	131	216
05:15 PM	13	57	70	3	8	11	65	9	74	155
05:30 PM	8	46	54	5	8	13	69	6	75	142
05:45 PM	12	49	61	3	12	15	64	5	69	145
Total	45	209	254	15	40	55	310	39	349	658
Grand Total	87	386	473	27	69	96	537	58	595	1164
Apprch %	18.4	81.6		28.1	71.9		90.3	9.7		
Total %	7.5	33.2	40.6	2.3	5.9	8.2	46.1	5	51.1	

	Dananberg Drive Westbound			Farnsworth Lane Northbound			Dananberg Drive Eastbound			
Start Time	Left	Thru	App. Total	Left	Right	App. Total	Thru	Right	App. Total	Int. Total
Peak Hour Analysis From 04:00 PM to 05:45 PM - Peak 1 of 1										
Peak Hour for Entire Intersection Begins at 05:00 PM										
05:00 PM	12	**57**	69	4	**12**	**16**	**112**	**19**	**131**	**216**
05:15 PM	**13**	57	**70**	3	8	11	65	9	74	155
05:30 PM	8	46	54	**5**	8	13	69	6	75	142
05:45 PM	12	49	61	3	12	15	64	5	69	145
Total Volume	45	209	254	15	40	55	310	39	349	658
% App. Total	17.7	82.3		27.3	72.7		88.8	11.2		
PHF	.865	.917	.907	.750	.833	.859	.692	.513	.666	.762

Counts Unlimited, Inc.
PO Box 1178
Corona, CA 92878
(951) 268-6268

City of El Centro
N/S: Farnsworth Lane
E/W: Dananberg Drive
Weather: Clear

File Name : 09_ECO_Farn_Dane PM
Site Code : 05724265
Start Date : 3/21/2024
Page No : 2

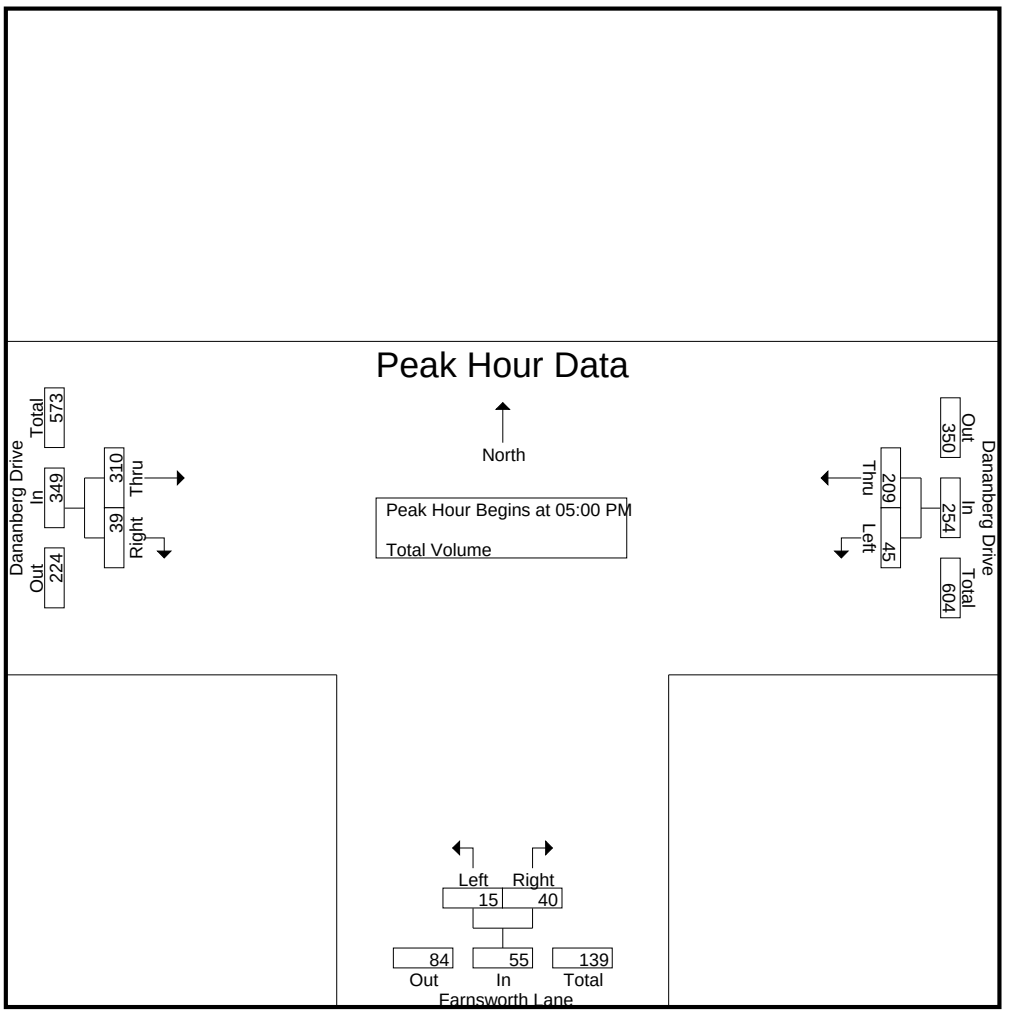

Peak Hour Analysis From 04:00 PM to 05:45 PM - Peak 1 of 1
Peak Hour for Each Approach Begins at:

	05:00 PM			05:00 PM			05:00 PM		
+0 mins.	12	**57**	69	4	**12**	**16**	**112**	**19**	**131**
+15 mins.	**13**	57	**70**	3	8	11	65	9	74
+30 mins.	8	46	54	**5**	8	13	69	6	75
+45 mins.	12	49	61	3	12	15	64	5	69
Total Volume	45	209	254	15	40	55	310	39	349
% App. Total	17.7	82.3		27.3	72.7		88.8	11.2	
PHF	.865	.917	.907	.750	.833	.859	.692	.513	.666

Counts Unlimited, Inc.
PO Box 1178
Corona, CA 92878
(951) 268-6268

City of El Centro
N/S: S Dogwood Road
E/W: Dananberg Drive
Weather: Clear

File Name : 10_ECO_Dog_Dane AM
Site Code : 05724265
Start Date : 3/21/2024
Page No : 1

Groups Printed- Total Volume

	S Dogwood Road Southbound				Dananberg Drive Westbound				S Dogwood Road Northbound				Dananberg Drive Eastbound				
Start Time	Left	Thru	Right	App. Total	Left	Thru	Right	App. Total	Left	Thru	Right	App. Total	Left	Thru	Right	App. Total	Int. Total
07:00 AM	10	24	8	42	1	7	21	29	1	57	1	59	9	2	3	14	144
07:15 AM	9	36	10	55	1	6	24	31	6	73	2	81	11	7	1	19	186
07:30 AM	15	56	13	84	1	9	25	35	6	124	2	132	13	10	3	26	277
07:45 AM	20	67	34	121	1	19	21	41	7	113	1	121	11	14	4	29	312
Total	54	183	65	302	4	41	91	136	20	367	6	393	44	33	11	88	919
08:00 AM	21	60	17	98	1	6	20	27	7	96	4	107	11	10	8	29	261
08:15 AM	36	32	3	71	2	13	13	28	8	76	4	88	9	11	10	30	217
08:30 AM	39	45	10	94	1	11	27	39	11	59	4	74	9	8	12	29	236
08:45 AM	34	35	12	81	1	12	23	36	11	60	3	74	10	14	8	32	223
Total	130	172	42	344	5	42	83	130	37	291	15	343	39	43	38	120	937
Grand Total	184	355	107	646	9	83	174	266	57	658	21	736	83	76	49	208	1856
Apprch %	28.5	55	16.6		3.4	31.2	65.4		7.7	89.4	2.9		39.9	36.5	23.6		
Total %	9.9	19.1	5.8	34.8	0.5	4.5	9.4	14.3	3.1	35.5	1.1	39.7	4.5	4.1	2.6	11.2	

	S Dogwood Road Southbound				Dananberg Drive Westbound				S Dogwood Road Northbound				Dananberg Drive Eastbound				
Start Time	Left	Thru	Right	App. Total	Left	Thru	Right	App. Total	Left	Thru	Right	App. Total	Left	Thru	Right	App. Total	Int. Total
Peak Hour Analysis From 07:00 AM to 08:45 AM - Peak 1 of 1																	
Peak Hour for Entire Intersection Begins at 07:30 AM																	
07:30 AM	15	56	13	84	1	9	**25**	35	6	**124**	2	**132**	**13**	10	3	26	277
07:45 AM	20	**67**	**34**	**121**	1	**19**	21	**41**	7	113	1	121	11	**14**	4	29	**312**
08:00 AM	21	60	17	98	1	6	20	27	7	96	**4**	107	11	10	8	29	261
08:15 AM	**36**	32	3	71	**2**	13	13	28	**8**	76	4	88	9	11	**10**	**30**	217
Total Volume	92	215	67	374	5	47	79	131	28	409	11	448	44	45	25	114	1067
% App. Total	24.6	57.5	17.9		3.8	35.9	60.3		6.2	91.3	2.5		38.6	39.5	21.9		
PHF	.639	.802	.493	.773	.625	.618	.790	.799	.875	.825	.688	.848	.846	.804	.625	.950	.855

Counts Unlimited, Inc.
PO Box 1178
Corona, CA 92878
(951) 268-6268

City of El Centro
N/S: S Dogwood Road
E/W: Dananberg Drive
Weather: Clear

File Name : 10_ECO_Dog_Dane AM
Site Code : 05724265
Start Date : 3/21/2024
Page No : 2

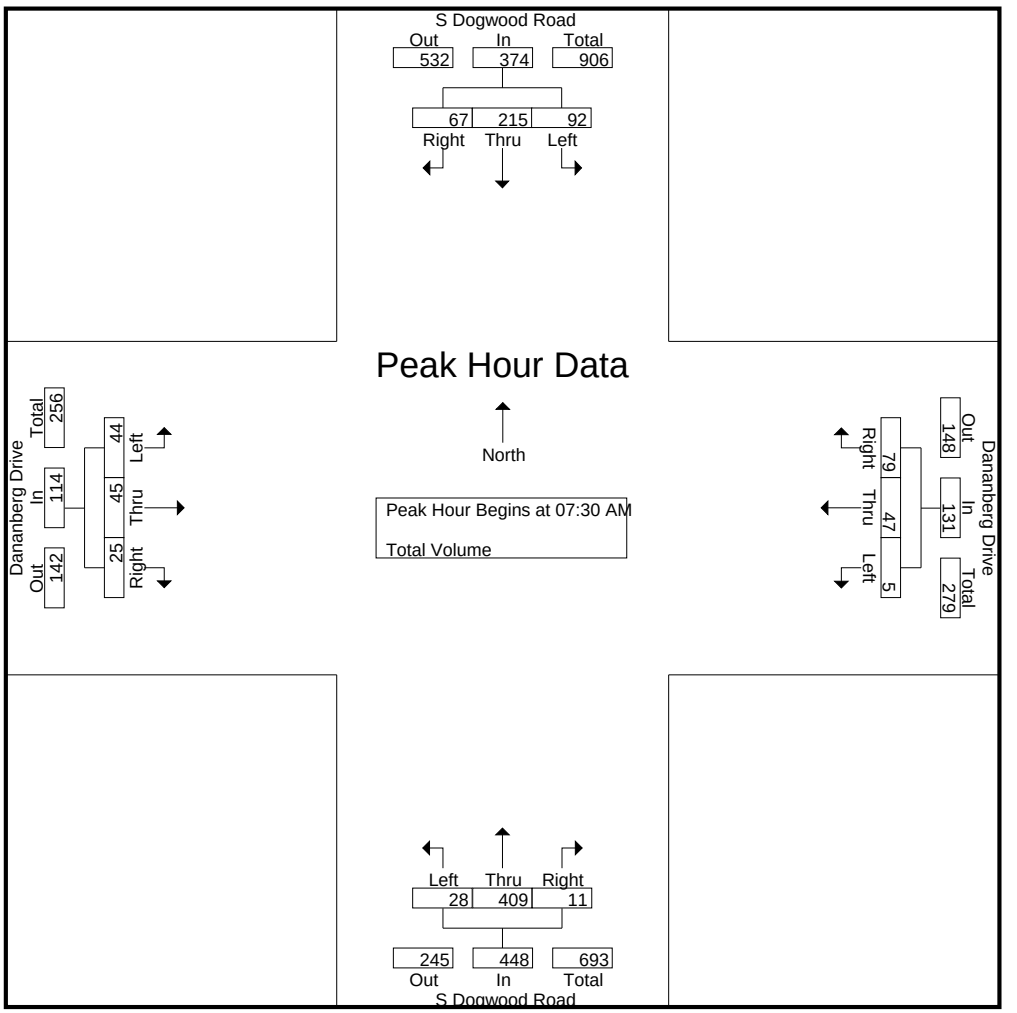

Peak Hour Analysis From 07:00 AM to 08:45 AM - Peak 1 of 1
Peak Hour for Each Approach Begins at:

	07:45 AM				07:00 AM				07:30 AM				08:00 AM			
+0 mins.	20	**67**	**34**	**121**	**1**	7	21	29	6	**124**	2	**132**	**11**	10	8	29
+15 mins.	21	60	17	98	1	6	24	31	7	113	1	121	9	11	10	30
+30 mins.	36	32	3	71	1	9	**25**	35	7	96	**4**	107	9	8	**12**	29
+45 mins.	**39**	45	10	94	1	**19**	21	**41**	**8**	76	4	88	10	**14**	8	**32**
Total Volume	116	204	64	384	4	41	91	136	28	409	11	448	39	43	38	120
% App. Total	30.2	53.1	16.7		2.9	30.1	66.9		6.2	91.3	2.5		32.5	35.8	31.7	
PHF	.744	.761	.471	.793	1.000	.539	.910	.829	.875	.825	.688	.848	.886	.768	.792	.938

Counts Unlimited, Inc.
PO Box 1178
Corona, CA 92878
(951) 268-6268

City of El Centro
N/S: S Dogwood Road
E/W: Dananberg Drive
Weather: Clear

File Name : 10_ECO_Dog_Dane PM
Site Code : 05724265
Start Date : 3/21/2024
Page No : 1

Groups Printed- Total Volume

	S Dogwood Road Southbound				Dananberg Drive Westbound				S Dogwood Road Northbound				Dananberg Drive Eastbound				
Start Time	Left	Thru	Right	App. Total	Left	Thru	Right	App. Total	Left	Thru	Right	App. Total	Left	Thru	Right	App. Total	Int. Total
04:00 PM	65	105	20	190	9	27	46	82	16	93	6	115	18	33	13	64	451
04:15 PM	68	104	13	185	14	27	57	98	17	84	6	107	11	35	17	63	453
04:30 PM	67	117	17	201	9	19	61	89	14	81	8	103	18	40	19	77	470
04:45 PM	46	94	15	155	12	15	49	76	16	102	2	120	4	40	17	61	412
Total	246	420	65	731	44	88	213	345	63	360	22	445	51	148	66	265	1786
05:00 PM	66	107	20	193	6	25	33	64	19	92	9	120	38	64	25	127	504
05:15 PM	66	120	17	203	11	22	47	80	32	80	9	121	18	33	22	73	477
05:30 PM	76	111	10	197	11	27	50	88	15	92	5	112	15	42	18	75	472
05:45 PM	55	98	13	166	11	27	48	86	25	85	10	120	10	45	17	72	444
Total	263	436	60	759	39	101	178	318	91	349	33	473	81	184	82	347	1897
Grand Total	509	856	125	1490	83	189	391	663	154	709	55	918	132	332	148	612	3683
Apprch %	34.2	57.4	8.4		12.5	28.5	59		16.8	77.2	6		21.6	54.2	24.2		
Total %	13.8	23.2	3.4	40.5	2.3	5.1	10.6	18	4.2	19.3	1.5	24.9	3.6	9	4	16.6	

	S Dogwood Road Southbound				Dananberg Drive Westbound				S Dogwood Road Northbound				Dananberg Drive Eastbound				
Start Time	Left	Thru	Right	App. Total	Left	Thru	Right	App. Total	Left	Thru	Right	App. Total	Left	Thru	Right	App. Total	Int. Total
Peak Hour Analysis From 04:00 PM to 05:45 PM - Peak 1 of 1																	
Peak Hour for Entire Intersection Begins at 05:00 PM																	
05:00 PM	66	107	**20**	193	6	25	33	64	19	**92**	9	120	**38**	**64**	**25**	**127**	**504**
05:15 PM	66	**120**	17	**203**	**11**	22	47	80	**32**	80	9	**121**	18	33	22	73	477
05:30 PM	**76**	111	10	197	11	**27**	**50**	**88**	15	92	5	112	15	42	18	75	472
05:45 PM	55	98	13	166	11	27	48	86	25	85	**10**	120	10	45	17	72	444
Total Volume	263	436	60	759	39	101	178	318	91	349	33	473	81	184	82	347	1897
% App. Total	34.7	57.4	7.9		12.3	31.8	56		19.2	73.8	7		23.3	53	23.6		
PHF	.865	.908	.750	.935	.886	.935	.890	.903	.711	.948	.825	.977	.533	.719	.820	.683	.941

Counts Unlimited, Inc.
PO Box 1178
Corona, CA 92878
(951) 268-6268

City of El Centro
N/S: S Dogwood Road
E/W: Dananberg Drive
Weather: Clear

File Name : 10_ECO_Dog_Dane PM
Site Code : 05724265
Start Date : 3/21/2024
Page No : 2

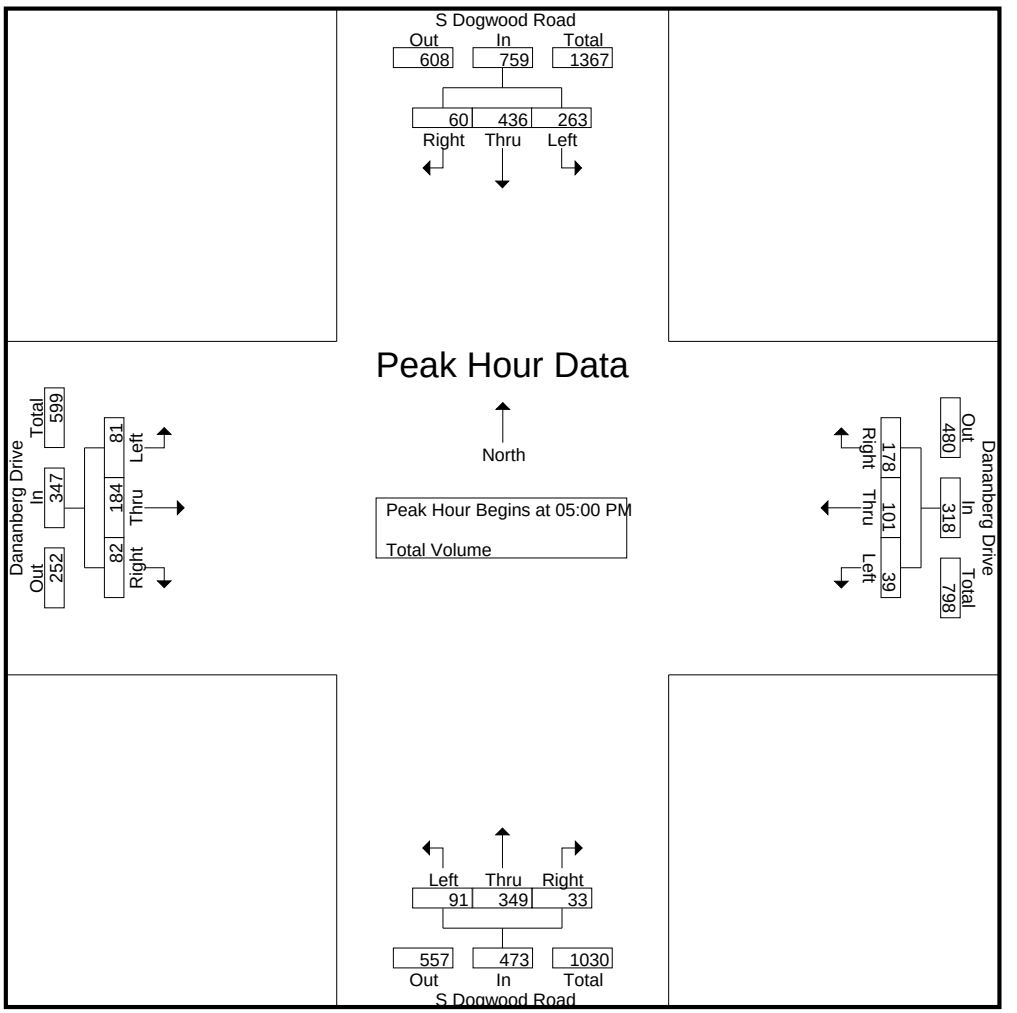

Peak Hour Analysis From 04:00 PM to 05:45 PM - Peak 1 of 1
Peak Hour for Each Approach Begins at:

	05:00 PM				04:00 PM				04:45 PM				05:00 PM			
+0 mins.	66	107	**20**	193	9	**27**	46	82	16	**102**	2	120	**38**	**64**	**25**	**127**
+15 mins.	66	**120**	17	**203**	**14**	27	57	**98**	19	92	**9**	120	18	33	22	73
+30 mins.	**76**	111	10	197	9	19	**61**	89	**32**	80	9	**121**	15	42	18	75
+45 mins.	55	98	13	166	12	15	49	76	15	92	5	112	10	45	17	72
Total Volume	263	436	60	759	44	88	213	345	82	366	25	473	81	184	82	347
% App. Total	34.7	57.4	7.9		12.8	25.5	61.7		17.3	77.4	5.3		23.3	53	23.6	
PHF	.865	.908	.750	.935	.786	.815	.873	.880	.641	.897	.694	.977	.533	.719	.820	.683

Counts Unlimited, Inc.
PO Box 1178
Corona, CA 92878
(951) 268-6268

County of Imperial
N/S: S Clark Road
E/W: W McCabe Road
Weather: Clear

File Name : 11_CIM_Clark_W McC AM
Site Code : 05724265
Start Date : 3/21/2024
Page No : 1

Groups Printed- Total Volume

	S Clark Road Southbound				W McCabe Road Westbound				S Clark Road Northbound				W McCabe Road Eastbound				
Start Time	Left	Thru	Right	App. Total	Left	Thru	Right	App. Total	Left	Thru	Right	App. Total	Left	Thru	Right	App. Total	Int. Total
07:00 AM	6	13	15	34	5	23	9	37	1	30	3	34	14	20	9	43	148
07:15 AM	5	30	26	61	2	45	16	63	2	45	3	50	7	23	4	34	208
07:30 AM	14	34	73	121	7	76	30	113	1	50	2	53	12	41	4	57	344
07:45 AM	18	48	49	115	8	58	19	85	2	48	2	52	33	44	4	81	333
Total	43	125	163	331	22	202	74	298	6	173	10	189	66	128	21	215	1033
08:00 AM	9	36	25	70	6	35	12	53	3	24	2	29	43	77	1	121	273
08:15 AM	8	14	9	31	5	18	9	32	3	32	2	37	17	28	5	50	150
08:30 AM	11	18	10	39	2	15	10	27	5	25	2	32	10	13	3	26	124
08:45 AM	7	23	8	38	1	16	10	27	5	25	2	32	11	10	0	21	118
Total	35	91	52	178	14	84	41	139	16	106	8	130	81	128	9	218	665
Grand Total	78	216	215	509	36	286	115	437	22	279	18	319	147	256	30	433	1698
Apprch %	15.3	42.4	42.2		8.2	65.4	26.3		6.9	87.5	5.6		33.9	59.1	6.9		
Total %	4.6	12.7	12.7	30	2.1	16.8	6.8	25.7	1.3	16.4	1.1	18.8	8.7	15.1	1.8	25.5	

	S Clark Road Southbound				W McCabe Road Westbound				S Clark Road Northbound				W McCabe Road Eastbound				
Start Time	Left	Thru	Right	App. Total	Left	Thru	Right	App. Total	Left	Thru	Right	App. Total	Left	Thru	Right	App. Total	Int. Total
Peak Hour Analysis From 07:00 AM to 08:45 AM - Peak 1 of 1																	
Peak Hour for Entire Intersection Begins at 07:15 AM																	
07:15 AM	5	30	26	61	2	45	16	63	2	45	**3**	50	7	23	**4**	34	208
07:30 AM	14	34	**73**	**121**	7	**76**	**30**	**113**	1	**50**	2	**53**	12	41	4	57	**344**
07:45 AM	**18**	**48**	49	115	**8**	58	19	85	2	48	2	52	33	44	4	81	333
08:00 AM	9	36	25	70	6	35	12	53	**3**	24	2	29	**43**	**77**	1	**121**	273
Total Volume	46	148	173	367	23	214	77	314	8	167	9	184	95	185	13	293	1158
% App. Total	12.5	40.3	47.1		7.3	68.2	24.5		4.3	90.8	4.9		32.4	63.1	4.4		
PHF	.639	.771	.592	.758	.719	.704	.642	.695	.667	.835	.750	.868	.552	.601	.813	.605	.842

Counts Unlimited, Inc.
PO Box 1178
Corona, CA 92878
(951) 268-6268

County of Imperial
N/S: S Clark Road
E/W: W McCabe Road
Weather: Clear

File Name : 11_CIM_Clark_W McC AM
Site Code : 05724265
Start Date : 3/21/2024
Page No : 2

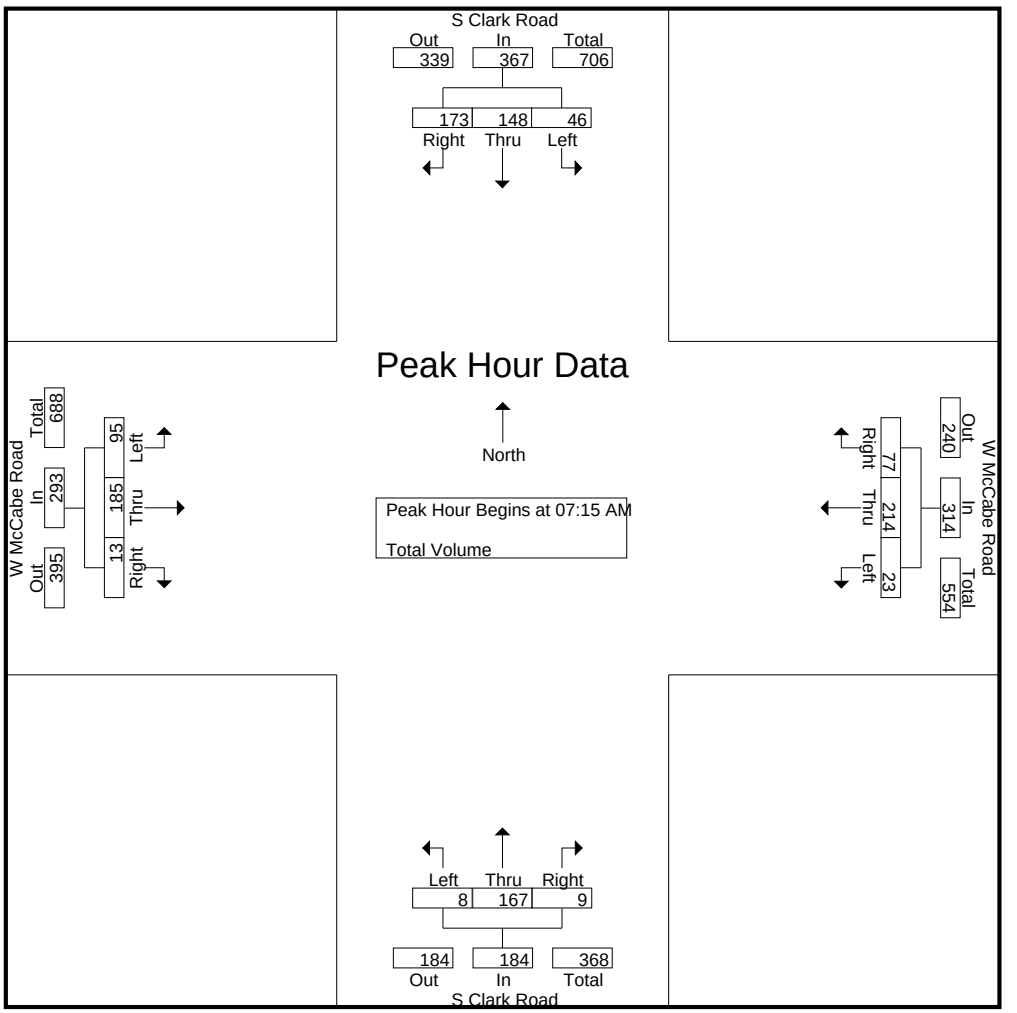

Peak Hour Analysis From 07:00 AM to 08:45 AM - Peak 1 of 1
Peak Hour for Each Approach Begins at:

	07:15 AM				07:15 AM				07:00 AM				07:30 AM			
+0 mins.	5	30	26	61	2	45	16	63	1	30	**3**	34	12	41	4	57
+15 mins.	14	34	**73**	**121**	7	**76**	**30**	**113**	**2**	45	3	50	33	44	4	81
+30 mins.	**18**	**48**	49	115	**8**	58	19	85	1	**50**	2	**53**	**43**	**77**	1	**121**
+45 mins.	9	36	25	70	6	35	12	53	2	48	2	52	17	28	**5**	50
Total Volume	46	148	173	367	23	214	77	314	6	173	10	189	105	190	14	309
% App. Total	12.5	40.3	47.1		7.3	68.2	24.5		3.2	91.5	5.3		34	61.5	4.5	
PHF	.639	.771	.592	.758	.719	.704	.642	.695	.750	.865	.833	.892	.610	.617	.700	.638

Counts Unlimited, Inc.
PO Box 1178
Corona, CA 92878
(951) 268-6268

County of Imperial
N/S: S Clark Road
E/W: W McCabe Road
Weather: Clear

File Name : 11_CIM_Clark_W McC PM
Site Code : 05724265
Start Date : 3/21/2024
Page No : 1

Groups Printed- Total Volume

	S Clark Road Southbound				W McCabe Road Westbound				S Clark Road Northbound				W McCabe Road Eastbound				
Start Time	Left	Thru	Right	App. Total	Left	Thru	Right	App. Total	Left	Thru	Right	App. Total	Left	Thru	Right	App. Total	Int. Total
04:00 PM	17	49	16	82	2	18	8	28	5	29	4	38	25	37	5	67	215
04:15 PM	22	36	19	77	2	30	7	39	2	20	0	22	19	41	4	64	202
04:30 PM	15	28	11	54	6	29	10	45	4	21	4	29	25	40	4	69	197
04:45 PM	21	37	12	70	1	19	12	32	5	20	5	30	21	36	3	60	192
Total	75	150	58	283	11	96	37	144	16	90	13	119	90	154	16	260	806
05:00 PM	27	49	11	87	1	22	13	36	14	35	16	65	19	41	2	62	250
05:15 PM	24	44	15	83	1	32	9	42	9	30	7	46	11	32	3	46	217
05:30 PM	23	29	13	65	5	27	13	45	1	24	3	28	13	36	2	51	189
05:45 PM	26	34	13	73	1	25	10	36	6	16	5	27	13	34	4	51	187
Total	100	156	52	308	8	106	45	159	30	105	31	166	56	143	11	210	843
Grand Total	175	306	110	591	19	202	82	303	46	195	44	285	146	297	27	470	1649
Apprch %	29.6	51.8	18.6		6.3	66.7	27.1		16.1	68.4	15.4		31.1	63.2	5.7		
Total %	10.6	18.6	6.7	35.8	1.2	12.2	5	18.4	2.8	11.8	2.7	17.3	8.9	18	1.6	28.5	

	S Clark Road Southbound				W McCabe Road Westbound				S Clark Road Northbound				W McCabe Road Eastbound				
Start Time	Left	Thru	Right	App. Total	Left	Thru	Right	App. Total	Left	Thru	Right	App. Total	Left	Thru	Right	App. Total	Int. Total
Peak Hour Analysis From 04:00 PM to 05:45 PM - Peak 1 of 1																	
Peak Hour for Entire Intersection Begins at 04:30 PM																	
04:30 PM	15	28	11	54	**6**	29	10	**45**	4	21	4	29	**25**	40	**4**	**69**	197
04:45 PM	21	37	12	70	1	19	12	32	5	20	5	30	21	36	3	60	192
05:00 PM	**27**	**49**	11	**87**	1	22	**13**	36	**14**	**35**	**16**	**65**	19	**41**	2	62	**250**
05:15 PM	24	44	**15**	83	1	**32**	9	42	9	30	7	46	11	32	3	46	217
Total Volume	87	158	49	294	9	102	44	155	32	106	32	170	76	149	12	237	856
% App. Total	29.6	53.7	16.7		5.8	65.8	28.4		18.8	62.4	18.8		32.1	62.9	5.1		
PHF	.806	.806	.817	.845	.375	.797	.846	.861	.571	.757	.500	.654	.760	.909	.750	.859	.856

Counts Unlimited, Inc.
PO Box 1178
Corona, CA 92878
(951) 268-6268

County of Imperial
N/S: S Clark Road
E/W: W McCabe Road
Weather: Clear

File Name : 11_CIM_Clark_W McC PM
Site Code : 05724265
Start Date : 3/21/2024
Page No : 2

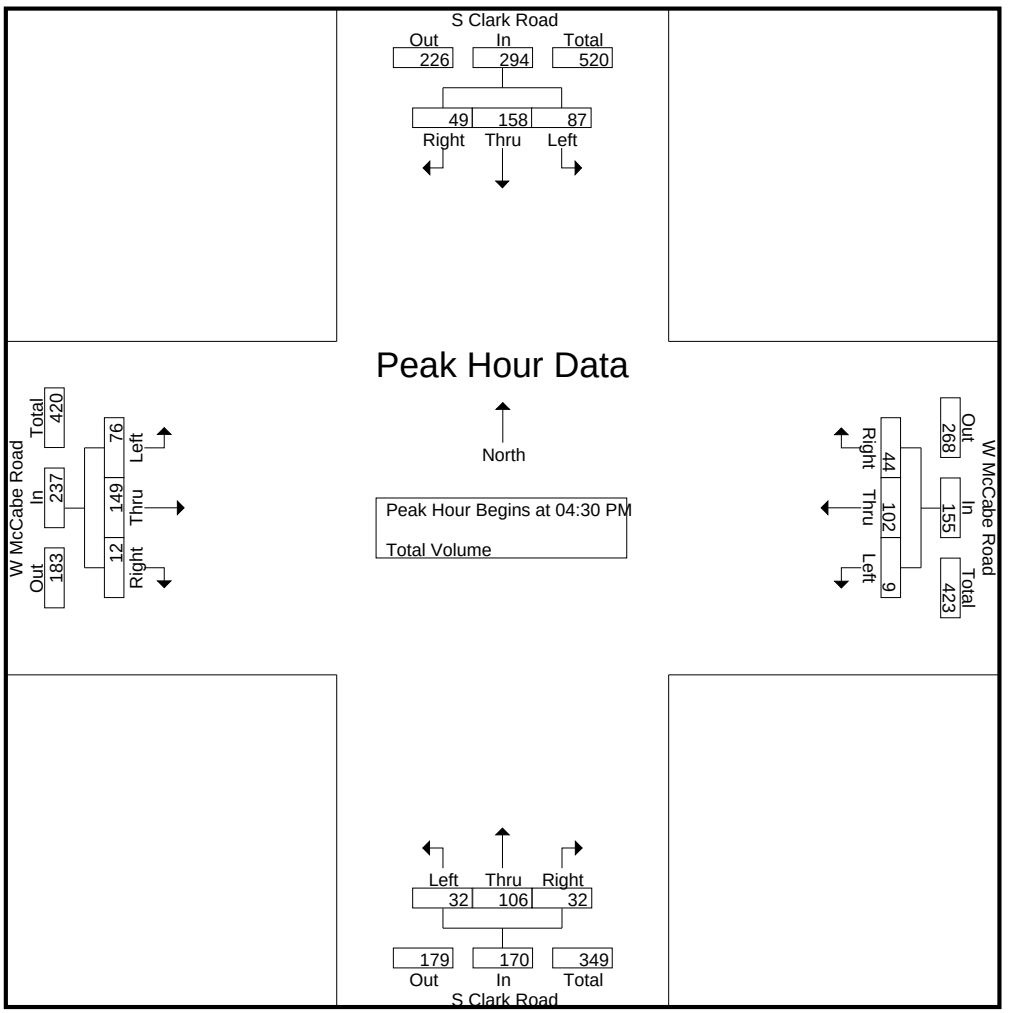

Peak Hour Analysis From 04:00 PM to 05:45 PM - Peak 1 of 1
Peak Hour for Each Approach Begins at:

	05:00 PM				05:00 PM				04:30 PM				04:00 PM			
+0 mins.	**27**	**49**	11	**87**	1	22	**13**	36	4	21	4	29	**25**	37	**5**	67
+15 mins.	24	44	**15**	83	1	**32**	9	42	5	20	5	30	19	**41**	4	64
+30 mins.	23	29	13	65	**5**	27	13	**45**	**14**	**35**	**16**	**65**	25	40	4	**69**
+45 mins.	26	34	13	73	1	25	10	36	9	30	7	46	21	36	3	60
Total Volume	100	156	52	308	8	106	45	159	32	106	32	170	90	154	16	260
% App. Total	32.5	50.6	16.9		5	66.7	28.3		18.8	62.4	18.8		34.6	59.2	6.2	
PHF	.926	.796	.867	.885	.400	.828	.865	.883	.571	.757	.500	.654	.900	.939	.800	.942

Counts Unlimited, Inc.
PO Box 1178
Corona, CA 92878
(951) 268-6268

County of Imperial
N/S: SR-86
E/W: W McCabe Road
Weather: Clear

File Name : 12_CIM_SR86_W McC AM
Site Code : 05724265
Start Date : 3/21/2024
Page No : 1

Groups Printed- Total Volume

	SR-86 Southbound				W McCabe Road Westbound				SR-86 Northbound				W McCabe Road Eastbound				
Start Time	Left	Thru	Right	App. Total	Left	Thru	Right	App. Total	Left	Thru	Right	App. Total	Left	Thru	Right	App. Total	Int. Total
07:00 AM	3	14	7	24	0	31	11	42	1	20	0	21	9	21	1	31	118
07:15 AM	10	34	17	61	1	50	10	61	0	31	0	31	9	15	5	29	182
07:30 AM	11	28	30	69	2	77	28	107	2	36	0	38	8	41	8	57	271
07:45 AM	5	30	29	64	1	52	19	72	5	61	0	66	15	44	2	61	263
Total	29	106	83	218	4	210	68	282	8	148	0	156	41	121	16	178	834
08:00 AM	12	28	20	60	0	30	16	46	3	43	1	47	30	51	5	86	239
08:15 AM	10	27	7	44	1	20	10	31	2	42	0	44	15	26	2	43	162
08:30 AM	10	34	6	50	0	12	10	22	7	43	2	52	7	15	2	24	148
08:45 AM	6	29	5	40	1	15	13	29	5	32	0	37	5	11	5	21	127
Total	38	118	38	194	2	77	49	128	17	160	3	180	57	103	14	174	676
Grand Total	67	224	121	412	6	287	117	410	25	308	3	336	98	224	30	352	1510
Apprch %	16.3	54.4	29.4		1.5	70	28.5		7.4	91.7	0.9		27.8	63.6	8.5		
Total %	4.4	14.8	8	27.3	0.4	19	7.7	27.2	1.7	20.4	0.2	22.3	6.5	14.8	2	23.3	

	SR-86 Southbound				W McCabe Road Westbound				SR-86 Northbound				W McCabe Road Eastbound				
Start Time	Left	Thru	Right	App. Total	Left	Thru	Right	App. Total	Left	Thru	Right	App. Total	Left	Thru	Right	App. Total	Int. Total
Peak Hour Analysis From 07:00 AM to 08:45 AM - Peak 1 of 1																	
Peak Hour for Entire Intersection Begins at 07:15 AM																	
07:15 AM	10	**34**	17	61	1	50	10	61	0	31	0	31	9	15	5	29	182
07:30 AM	11	28	**30**	**69**	**2**	**77**	**28**	**107**	2	36	0	38	8	41	**8**	57	**271**
07:45 AM	5	30	29	64	1	52	19	72	**5**	**61**	0	**66**	15	44	2	61	263
08:00 AM	**12**	28	20	60	0	30	16	46	3	43	**1**	47	**30**	**51**	5	**86**	239
Total Volume	38	120	96	254	4	209	73	286	10	171	1	182	62	151	20	233	955
% App. Total	15	47.2	37.8		1.4	73.1	25.5		5.5	94	0.5		26.6	64.8	8.6		
PHF	.792	.882	.800	.920	.500	.679	.652	.668	.500	.701	.250	.689	.517	.740	.625	.677	.881

Counts Unlimited, Inc.
PO Box 1178
Corona, CA 92878
(951) 268-6268

County of Imperial
N/S: SR-86
E/W: W McCabe Road
Weather: Clear

File Name : 12_CIM_SR86_W McC AM
Site Code : 05724265
Start Date : 3/21/2024
Page No : 2

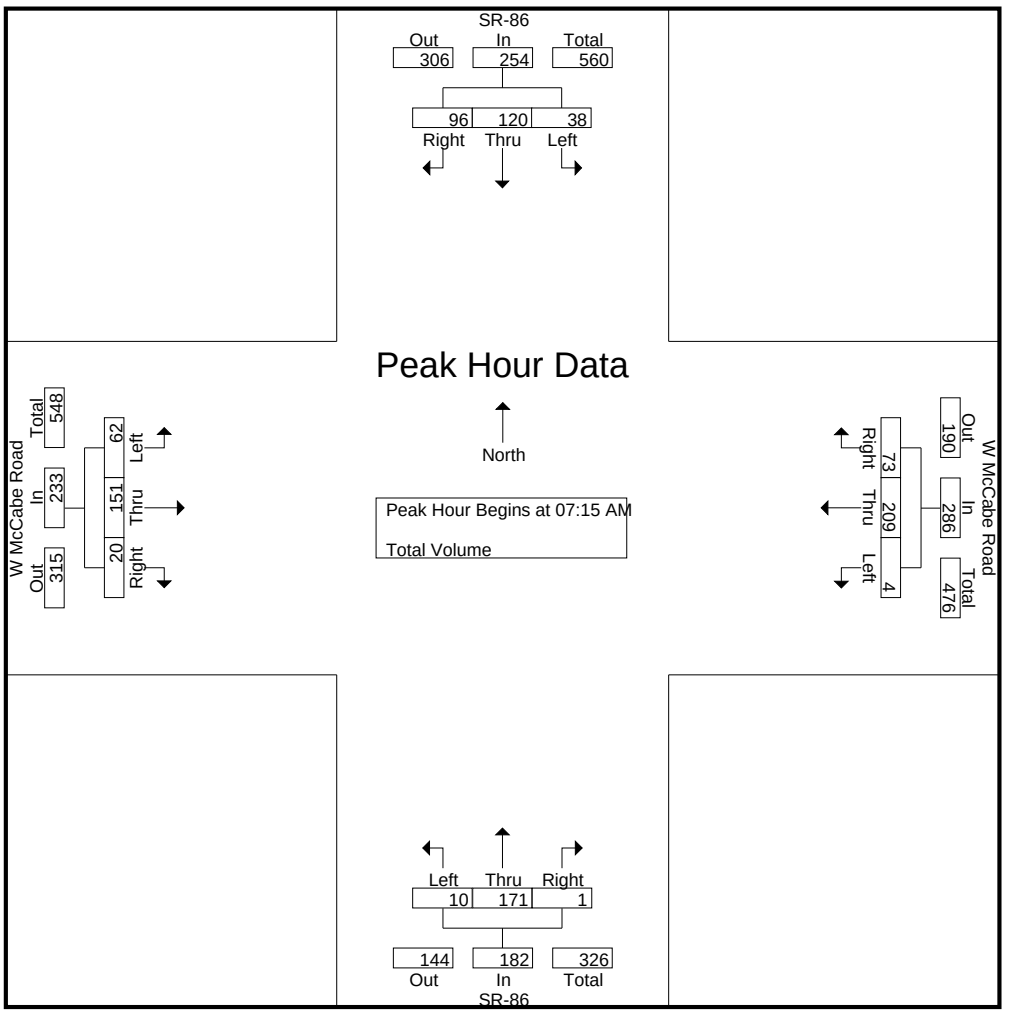

Peak Hour Analysis From 07:00 AM to 08:45 AM - Peak 1 of 1
Peak Hour for Each Approach Begins at:

	07:15 AM				07:15 AM				07:45 AM				07:30 AM			
+0 mins.	10	**34**	17	61	1	50	10	61	5	**61**	0	**66**	8	41	**8**	57
+15 mins.	11	28	**30**	**69**	**2**	**77**	**28**	**107**	3	43	1	47	15	44	2	61
+30 mins.	5	30	29	64	1	52	19	72	2	42	0	44	**30**	**51**	5	**86**
+45 mins.	**12**	28	20	60	0	30	16	46	**7**	43	**2**	52	15	26	2	43
Total Volume	38	120	96	254	4	209	73	286	17	189	3	209	68	162	17	247
% App. Total	15	47.2	37.8		1.4	73.1	25.5		8.1	90.4	1.4		27.5	65.6	6.9	
PHF	.792	.882	.800	.920	.500	.679	.652	.668	.607	.775	.375	.792	.567	.794	.531	.718

Counts Unlimited, Inc.
PO Box 1178
Corona, CA 92878
(951) 268-6268

County of Imperial
N/S: SR-86
E/W: W McCabe Road
Weather: Clear

File Name : 12_CIM_SR86_W McC PM
Site Code : 05724265
Start Date : 3/21/2024
Page No : 1

Groups Printed- Total Volume

	SR-86 Southbound				W McCabe Road Westbound				SR-86 Northbound				W McCabe Road Eastbound				
Start Time	Left	Thru	Right	App. Total	Left	Thru	Right	App. Total	Left	Thru	Right	App. Total	Left	Thru	Right	App. Total	Int. Total
04:00 PM	24	70	5	99	1	17	7	25	3	36	0	39	4	47	8	59	222
04:15 PM	24	54	4	82	0	27	13	40	6	34	1	41	12	40	8	60	223
04:30 PM	16	68	7	91	0	32	10	42	7	28	0	35	8	43	10	61	229
04:45 PM	19	52	10	81	0	19	21	40	3	23	2	28	9	39	5	53	202
Total	83	244	26	353	1	95	51	147	19	121	3	143	33	169	31	233	876
05:00 PM	26	75	11	112	0	22	17	39	5	21	0	26	12	68	10	90	267
05:15 PM	27	78	9	114	1	27	15	43	4	32	1	37	4	48	12	64	258
05:30 PM	24	54	6	84	0	37	7	44	3	35	0	38	4	42	6	52	218
05:45 PM	16	52	8	76	2	23	6	31	5	22	0	27	14	46	9	69	203
Total	93	259	34	386	3	109	45	157	17	110	1	128	34	204	37	275	946
Grand Total	176	503	60	739	4	204	96	304	36	231	4	271	67	373	68	508	1822
Apprch %	23.8	68.1	8.1		1.3	67.1	31.6		13.3	85.2	1.5		13.2	73.4	13.4		
Total %	9.7	27.6	3.3	40.6	0.2	11.2	5.3	16.7	2	12.7	0.2	14.9	3.7	20.5	3.7	27.9	

	SR-86 Southbound				W McCabe Road Westbound				SR-86 Northbound				W McCabe Road Eastbound				
Start Time	Left	Thru	Right	App. Total	Left	Thru	Right	App. Total	Left	Thru	Right	App. Total	Left	Thru	Right	App. Total	Int. Total
Peak Hour Analysis From 04:00 PM to 05:45 PM - Peak 1 of 1																	
Peak Hour for Entire Intersection Begins at 04:30 PM																	
04:30 PM	16	68	7	91	0	**32**	10	42	**7**	28	0	35	8	43	10	61	229
04:45 PM	19	52	10	81	0	19	**21**	40	3	23	**2**	28	9	39	5	53	202
05:00 PM	26	75	**11**	112	0	22	17	39	5	21	0	26	**12**	**68**	10	**90**	**267**
05:15 PM	**27**	**78**	9	**114**	**1**	27	15	**43**	4	**32**	1	**37**	4	48	**12**	64	258
Total Volume	88	273	37	398	1	100	63	164	19	104	3	126	33	198	37	268	956
% App. Total	22.1	68.6	9.3		0.6	61	38.4		15.1	82.5	2.4		12.3	73.9	13.8		
PHF	.815	.875	.841	.873	.250	.781	.750	.953	.679	.813	.375	.851	.688	.728	.771	.744	.895

Counts Unlimited, Inc.
PO Box 1178
Corona, CA 92878
(951) 268-6268

County of Imperial
N/S: SR-86
E/W: W McCabe Road
Weather: Clear

File Name : 12_CIM_SR86_W McC PM
Site Code : 05724265
Start Date : 3/21/2024
Page No : 2

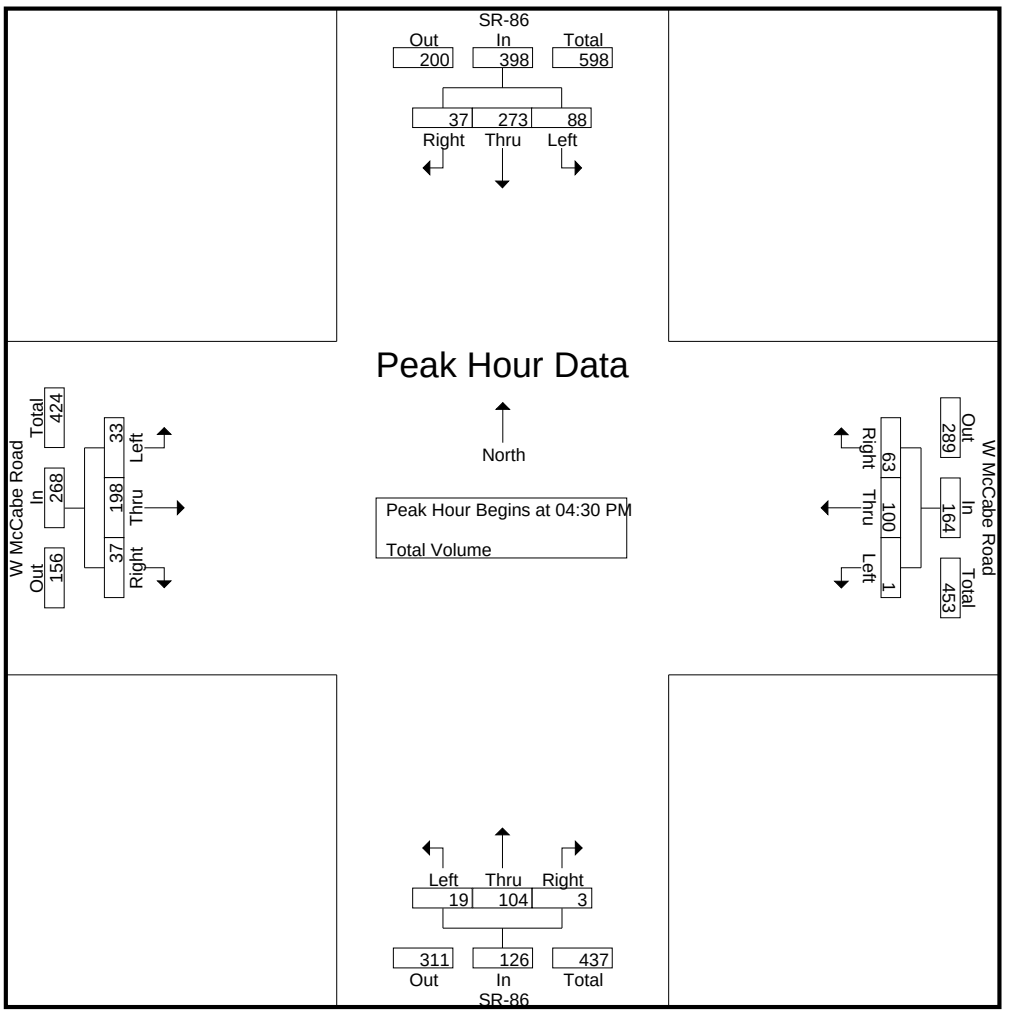

Peak Hour Analysis From 04:00 PM to 05:45 PM - Peak 1 of 1
Peak Hour for Each Approach Begins at:

	04:30 PM				04:45 PM				04:00 PM				05:00 PM			
+0 mins.	16	68	7	91	0	19	**21**	40	3	**36**	0	39	12	**68**	10	**90**
+15 mins.	19	52	10	81	0	22	17	39	6	34	1	**41**	4	48	**12**	64
+30 mins.	26	75	**11**	112	**1**	27	15	43	**7**	28	0	35	4	42	6	52
+45 mins.	**27**	**78**	9	**114**	0	**37**	7	**44**	3	23	**2**	28	**14**	46	9	69
Total Volume	88	273	37	398	1	105	60	166	19	121	3	143	34	204	37	275
% App. Total	22.1	68.6	9.3		0.6	63.3	36.1		13.3	84.6	2.1		12.4	74.2	13.5	
PHF	.815	.875	.841	.873	.250	.709	.714	.943	.679	.840	.375	.872	.607	.750	.771	.764

Counts Unlimited, Inc.
PO Box 1178
Corona, CA 92878
(951) 268-6268

County of Imperial
N/S: Farnsworth Road
E/W: W McCabe Road
Weather: Clear

File Name : 13_CIM_Farns_W McC AM
Site Code : 05724265
Start Date : 3/21/2024
Page No : 1

Groups Printed- Total Volume

	Farnsworth Road Southbound				W McCabe Road Westbound				Farnsworth Road (Dirt) Northbound				W McCabe Road Eastbound				
Start Time	Left	Thru	Right	App. Total	Left	Thru	Right	App. Total	Left	Thru	Right	App. Total	Left	Thru	Right	App. Total	Int. Total
07:00 AM	8	0	4	12	0	34	5	39	0	0	0	0	4	20	0	24	75
07:15 AM	7	0	6	13	0	58	7	65	0	0	0	0	0	24	0	24	102
07:30 AM	9	1	19	29	1	84	6	91	0	0	0	0	3	48	0	51	171
07:45 AM	7	0	7	14	0	59	12	71	0	1	1	2	6	45	0	51	138
Total	31	1	36	68	1	235	30	266	0	1	1	2	13	137	0	150	486
08:00 AM	8	1	1	10	0	45	9	54	0	0	0	0	5	58	0	63	127
08:15 AM	5	0	0	5	0	30	6	36	0	1	0	1	3	34	0	37	79
08:30 AM	3	0	1	4	0	26	3	29	0	0	1	1	0	27	0	27	61
08:45 AM	7	0	2	9	0	27	4	31	0	0	0	0	1	17	0	18	58
Total	23	1	4	28	0	128	22	150	0	1	1	2	9	136	0	145	325
Grand Total	54	2	40	96	1	363	52	416	0	2	2	4	22	273	0	295	811
Apprch %	56.2	2.1	41.7		0.2	87.3	12.5		0	50	50		7.5	92.5	0		
Total %	6.7	0.2	4.9	11.8	0.1	44.8	6.4	51.3	0	0.2	0.2	0.5	2.7	33.7	0	36.4	

	Farnsworth Road Southbound				W McCabe Road Westbound				Farnsworth Road (Dirt) Northbound				W McCabe Road Eastbound				
Start Time	Left	Thru	Right	App. Total	Left	Thru	Right	App. Total	Left	Thru	Right	App. Total	Left	Thru	Right	App. Total	Int. Total
Peak Hour Analysis From 07:00 AM to 08:45 AM - Peak 1 of 1																	
Peak Hour for Entire Intersection Begins at 07:15 AM																	
07:15 AM	7	0	6	13	0	58	7	65	0	0	0	0	0	24	0	24	102
07:30 AM	**9**	**1**	**19**	**29**	**1**	**84**	6	**91**	0	0	0	0	3	48	0	51	**171**
07:45 AM	7	0	7	14	0	59	**12**	71	0	**1**	**1**	**2**	**6**	45	0	51	138
08:00 AM	8	1	1	10	0	45	9	54	0	0	0	0	5	**58**	0	**63**	127
Total Volume	31	2	33	66	1	246	34	281	0	1	1	2	14	175	0	189	538
% App. Total	47	3	50		0.4	87.5	12.1		0	50	50		7.4	92.6	0		
PHF	.861	.500	.434	.569	.250	.732	.708	.772	.000	.250	.250	.250	.583	.754	.000	.750	.787

Counts Unlimited, Inc.
PO Box 1178
Corona, CA 92878
(951) 268-6268

County of Imperial
N/S: Farnsworth Road
E/W: W McCabe Road
Weather: Clear

File Name : 13_CIM_Farns_W McC AM
Site Code : 05724265
Start Date : 3/21/2024
Page No : 2

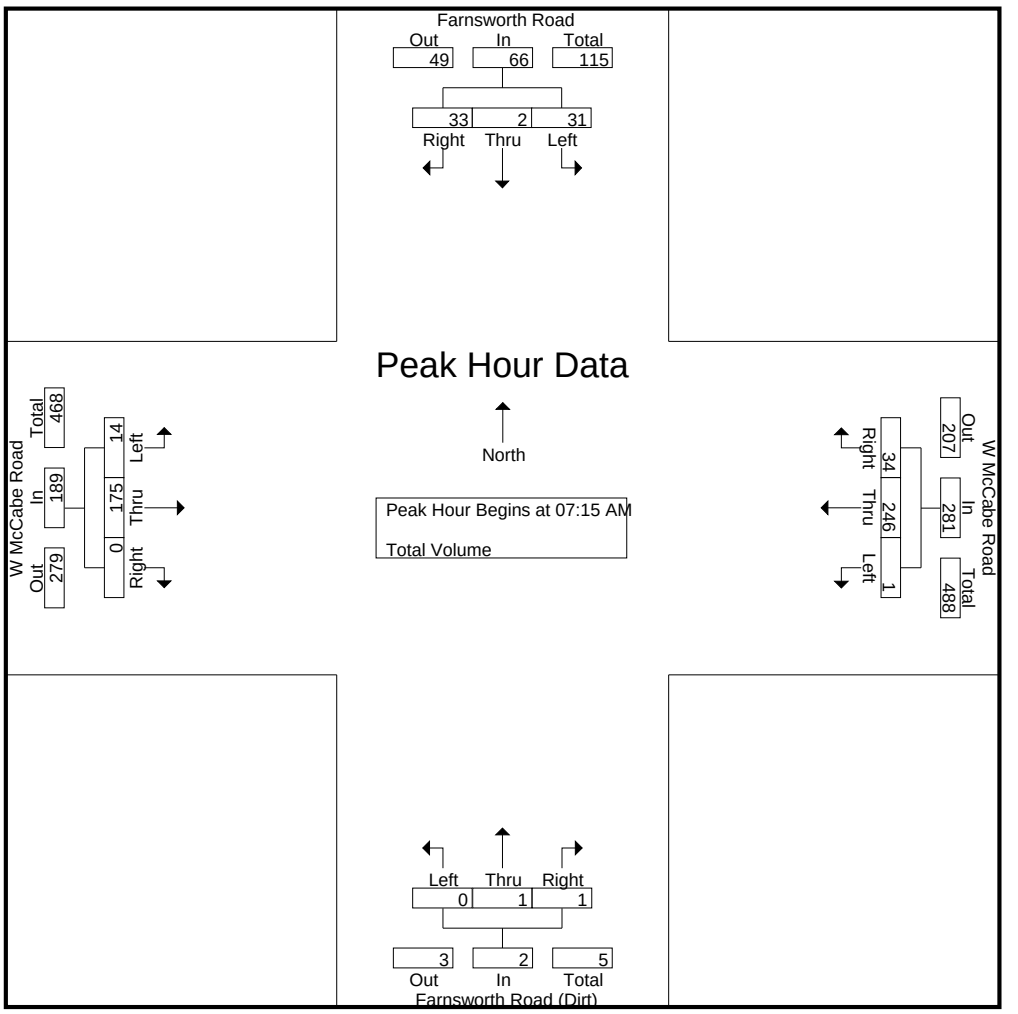

Peak Hour Analysis From 07:00 AM to 08:45 AM - Peak 1 of 1
Peak Hour for Each Approach Begins at:

	07:00 AM				07:15 AM				07:45 AM				07:30 AM			
+0 mins.	8	0	4	12	0	58	7	65	0	**1**	**1**	**2**	3	48	0	51
+15 mins.	7	0	6	13	**1**	**84**	6	**91**	0	0	0	0	**6**	45	0	51
+30 mins.	**9**	**1**	**19**	**29**	0	59	**12**	71	0	1	0	1	5	**58**	0	**63**
+45 mins.	7	0	7	14	0	45	9	54	0	0	1	1	3	34	0	37
Total Volume	31	1	36	68	1	246	34	281	0	2	2	4	17	185	0	202
% App. Total	45.6	1.5	52.9		0.4	87.5	12.1		0	50	50		8.4	91.6	0	
PHF	.861	.250	.474	.586	.250	.732	.708	.772	.000	.500	.500	.500	.708	.797	.000	.802

Counts Unlimited, Inc.
PO Box 1178
Corona, CA 92878
(951) 268-6268

County of Imperial
N/S: Farnsworth Road
E/W: W McCabe Road
Weather: Clear

File Name : 13_CIM_Farns_W McC PM
Site Code : 05724265
Start Date : 3/21/2024
Page No : 1

Groups Printed- Total Volume

	Farnsworth Road Southbound				W McCabe Road Westbound				Farnsworth Road (Dirt) Northbound				W McCabe Road Eastbound				
Start Time	Left	Thru	Right	App. Total	Left	Thru	Right	App. Total	Left	Thru	Right	App. Total	Left	Thru	Right	App. Total	Int. Total
04:00 PM	4	0	3	7	0	23	7	30	0	0	0	0	5	69	1	75	112
04:15 PM	6	0	3	9	0	40	7	47	0	0	0	0	3	60	0	63	119
04:30 PM	11	0	1	12	0	40	10	50	0	0	0	0	2	59	0	61	123
04:45 PM	12	0	1	13	0	38	10	48	0	0	0	0	8	47	0	55	116
Total	33	0	8	41	0	141	34	175	0	0	0	0	18	235	1	254	470
05:00 PM	23	0	1	24	0	38	6	44	0	0	0	0	2	86	0	88	156
05:15 PM	12	0	6	18	0	44	6	50	0	0	0	0	2	80	0	82	150
05:30 PM	7	1	2	10	0	40	11	51	0	0	0	0	2	63	0	65	126
05:45 PM	14	0	3	17	0	29	5	34	0	0	0	0	6	58	0	64	115
Total	56	1	12	69	0	151	28	179	0	0	0	0	12	287	0	299	547
Grand Total	89	1	20	110	0	292	62	354	0	0	0	0	30	522	1	553	1017
Apprch %	80.9	0.9	18.2		0	82.5	17.5		0	0	0		5.4	94.4	0.2		
Total %	8.8	0.1	2	10.8	0	28.7	6.1	34.8	0	0	0	0	2.9	51.3	0.1	54.4	

	Farnsworth Road Southbound				W McCabe Road Westbound				Farnsworth Road (Dirt) Northbound				W McCabe Road Eastbound				
Start Time	Left	Thru	Right	App. Total	Left	Thru	Right	App. Total	Left	Thru	Right	App. Total	Left	Thru	Right	App. Total	Int. Total
Peak Hour Analysis From 04:00 PM to 05:45 PM - Peak 1 of 1																	
Peak Hour for Entire Intersection Begins at 04:45 PM																	
04:45 PM	12	0	1	13	0	38	10	48	0	0	0	0	**8**	47	0	55	116
05:00 PM	**23**	0	1	**24**	0	38	6	44	0	0	0	0	2	**86**	0	**88**	**156**
05:15 PM	12	0	**6**	18	0	**44**	6	50	0	0	0	0	2	80	0	82	150
05:30 PM	7	**1**	2	10	0	40	**11**	**51**	0	0	0	0	2	63	0	65	126
Total Volume	54	1	10	65	0	160	33	193	0	0	0	0	14	276	0	290	548
% App. Total	83.1	1.5	15.4		0	82.9	17.1		0	0	0		4.8	95.2	0		
PHF	.587	.250	.417	.677	.000	.909	.750	.946	.000	.000	.000	.000	.438	.802	.000	.824	.878

Counts Unlimited, Inc.
PO Box 1178
Corona, CA 92878
(951) 268-6268

County of Imperial
N/S: Farnsworth Road
E/W: W McCabe Road
Weather: Clear

File Name : 13_CIM_Farns_W McC PM
Site Code : 05724265
Start Date : 3/21/2024
Page No : 2

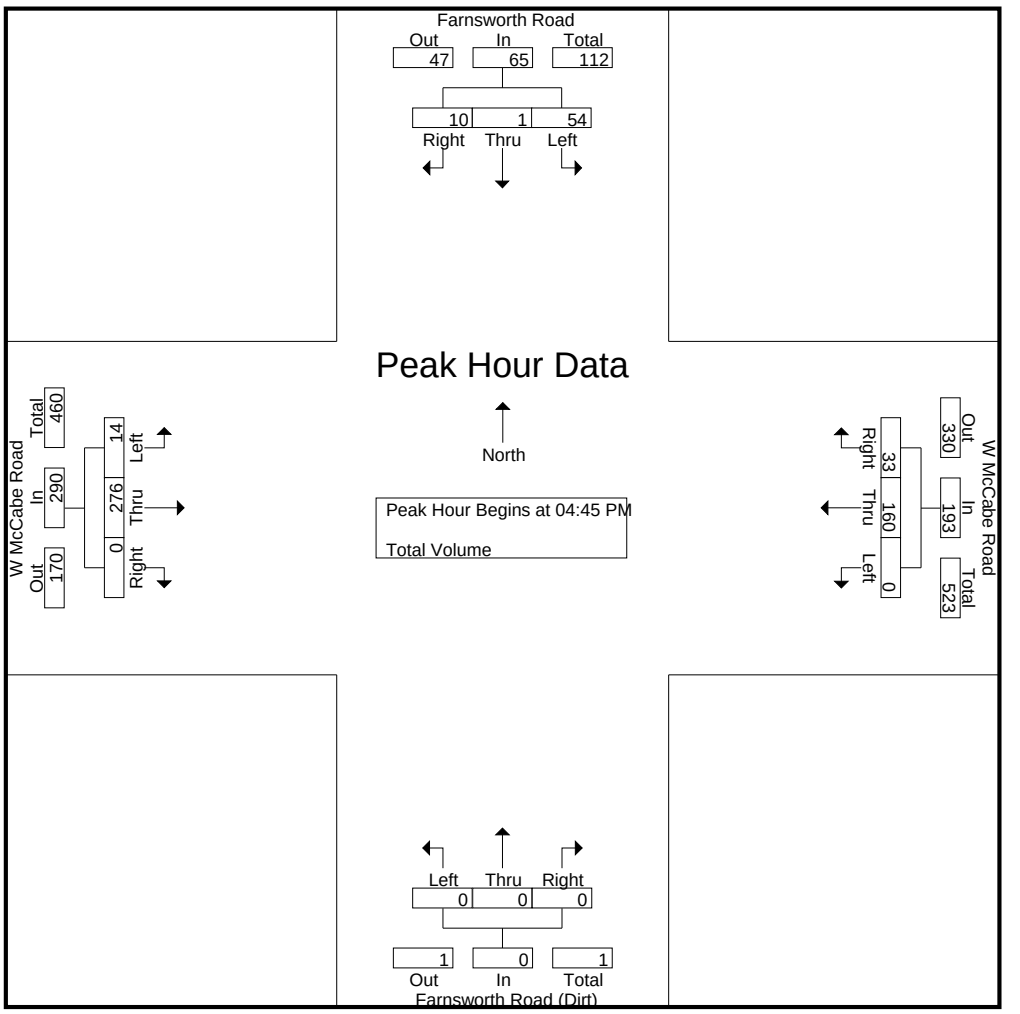

Peak Hour Analysis From 04:00 PM to 05:45 PM - Peak 1 of 1
Peak Hour for Each Approach Begins at:

	05:00 PM				04:45 PM				04:00 PM				05:00 PM			
+0 mins.	**23**	0	1	**24**	0	38	10	48	0	0	0	0	2	**86**	0	**88**
+15 mins.	12	0	**6**	18	0	38	6	44	0	0	0	0	2	80	0	82
+30 mins.	7	**1**	2	10	0	**44**	6	50	0	0	0	0	2	63	0	65
+45 mins.	14	0	3	17	0	40	**11**	**51**	0	0	0	0	**6**	58	0	64
Total Volume	56	1	12	69	0	160	33	193	0	0	0	0	12	287	0	299
% App. Total	81.2	1.4	17.4		0	82.9	17.1		0	0	0		4	96	0	
PHF	.609	.250	.500	.719	.000	.909	.750	.946	.000	.000	.000	.000	.500	.834	.000	.849

Counts Unlimited, Inc.
PO Box 1178
Corona, CA 92878
(951) 268-6268

County of Imperial
N/S: S Dogwood Road
E/W: W McCabe Road (South)
Weather: Clear

File Name : 14_CIM_Dog_McC S AM
Site Code : 05724265
Start Date : 3/21/2024
Page No : 1

Groups Printed- Total Volume

	S Dogwood Road Southbound			S Dogwood Road Northbound			W McCabe Road Eastbound			
Start Time	Thru	Right	App. Total	Left	Thru	App. Total	Left	Right	App. Total	Int. Total
07:00 AM	31	4	35	37	64	101	9	17	26	162
07:15 AM	30	11	41	55	101	156	10	24	34	231
07:30 AM	43	10	53	75	139	214	19	35	54	321
07:45 AM	55	17	72	61	132	193	17	40	57	322
Total	159	42	201	228	436	664	55	116	171	1036
08:00 AM	57	10	67	39	100	139	9	55	64	270
08:15 AM	39	7	46	26	84	110	13	28	41	197
08:30 AM	50	6	56	22	61	83	7	26	33	172
08:45 AM	26	3	29	30	67	97	10	14	24	150
Total	172	26	198	117	312	429	39	123	162	789
Grand Total	331	68	399	345	748	1093	94	239	333	1825
Apprch %	83	17		31.6	68.4		28.2	71.8		
Total %	18.1	3.7	21.9	18.9	41	59.9	5.2	13.1	18.2	

	S Dogwood Road Southbound			S Dogwood Road Northbound			W McCabe Road Eastbound			
Start Time	Thru	Right	App. Total	Left	Thru	App. Total	Left	Right	App. Total	Int. Total
Peak Hour Analysis From 07:00 AM to 08:45 AM - Peak 1 of 1										
Peak Hour for Entire Intersection Begins at 07:15 AM										
07:15 AM	30	11	41	55	101	156	10	24	34	231
07:30 AM	43	10	53	**75**	**139**	**214**	**19**	35	54	321
07:45 AM	55	**17**	**72**	61	132	193	17	40	57	**322**
08:00 AM	**57**	10	67	39	100	139	9	**55**	**64**	270
Total Volume	185	48	233	230	472	702	55	154	209	1144
% App. Total	79.4	20.6		32.8	67.2		26.3	73.7		
PHF	.811	.706	.809	.767	.849	.820	.724	.700	.816	.888

Counts Unlimited, Inc.
PO Box 1178
Corona, CA 92878
(951) 268-6268

County of Imperial
N/S: S Dogwood Road
E/W: W McCabe Road (South)
Weather: Clear

File Name : 14_CIM_Dog_McC S AM
Site Code : 05724265
Start Date : 3/21/2024
Page No : 2

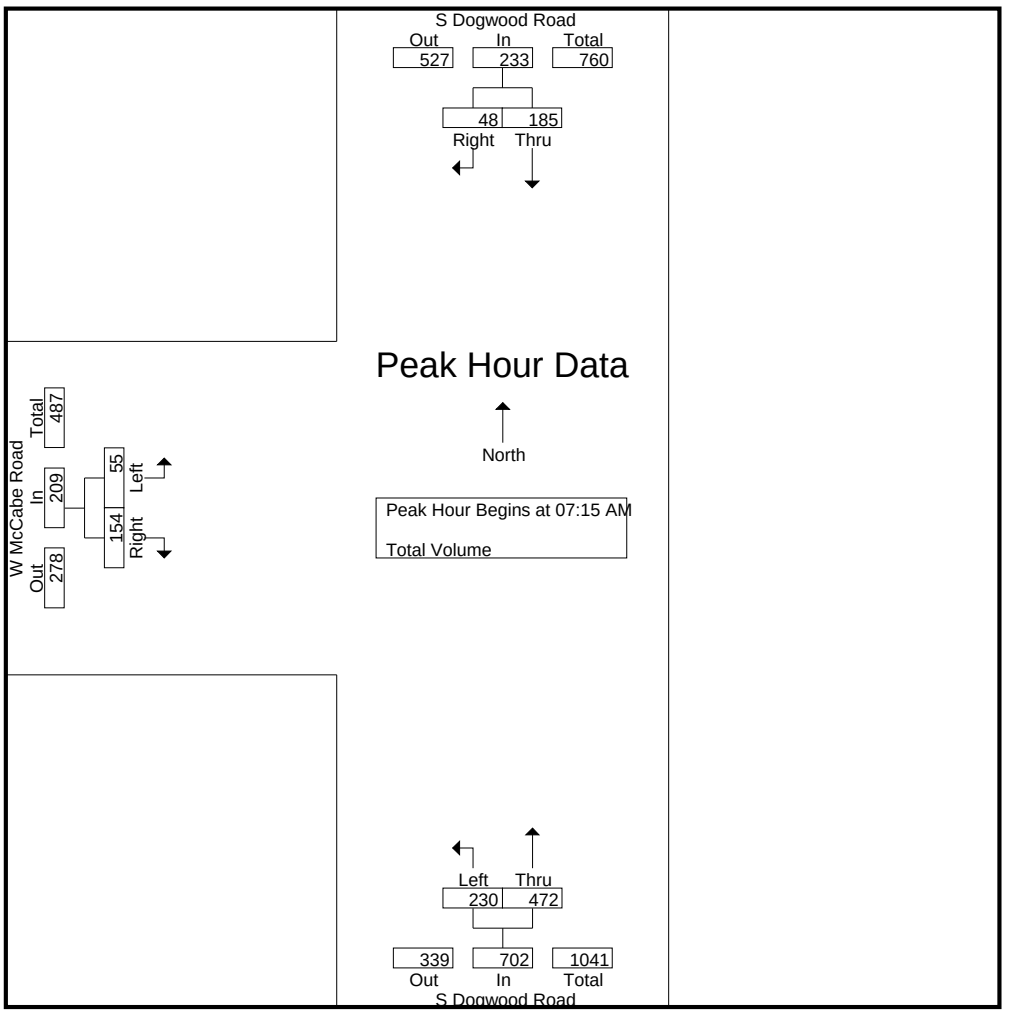

Peak Hour Analysis From 07:00 AM to 08:45 AM - Peak 1 of 1
Peak Hour for Each Approach Begins at:

	07:45 AM			07:15 AM			07:30 AM		
+0 mins.	55	**17**	**72**	55	101	156	**19**	35	54
+15 mins.	**57**	10	67	**75**	**139**	**214**	17	40	57
+30 mins.	39	7	46	61	132	193	9	**55**	**64**
+45 mins.	50	6	56	39	100	139	13	28	41
Total Volume	201	40	241	230	472	702	58	158	216
% App. Total	83.4	16.6		32.8	67.2		26.9	73.1	
PHF	.882	.588	.837	.767	.849	.820	.763	.718	.844

Counts Unlimited, Inc.
PO Box 1178
Corona, CA 92878
(951) 268-6268

County of Imperial
N/S: S Dogwood Road
E/W: W McCabe Road (South)
Weather: Clear

File Name : 14_CIM_Dog_McC S PM
Site Code : 05724265
Start Date : 3/21/2024
Page No : 1

Groups Printed- Total Volume

	S Dogwood Road Southbound			S Dogwood Road Northbound			W McCabe Road Eastbound			
Start Time	Thru	Right	App. Total	Left	Thru	App. Total	Left	Right	App. Total	Int. Total
04:00 PM	122	10	132	22	82	104	17	57	74	310
04:15 PM	114	16	130	29	79	108	10	51	61	299
04:30 PM	112	19	131	30	70	100	19	56	75	306
04:45 PM	93	8	101	42	70	112	16	41	57	270
Total	441	53	494	123	301	424	62	205	267	1185
05:00 PM	118	10	128	37	81	118	25	83	108	354
05:15 PM	121	15	136	35	88	123	16	73	89	348
05:30 PM	114	15	129	35	95	130	20	48	68	327
05:45 PM	106	8	114	29	84	113	15	55	70	297
Total	459	48	507	136	348	484	76	259	335	1326
Grand Total	900	101	1001	259	649	908	138	464	602	2511
Apprch %	89.9	10.1		28.5	71.5		22.9	77.1		
Total %	35.8	4	39.9	10.3	25.8	36.2	5.5	18.5	24	

	S Dogwood Road Southbound			S Dogwood Road Northbound			W McCabe Road Eastbound			
Start Time	Thru	Right	App. Total	Left	Thru	App. Total	Left	Right	App. Total	Int. Total
Peak Hour Analysis From 04:00 PM to 05:45 PM - Peak 1 of 1										
Peak Hour for Entire Intersection Begins at 05:00 PM										
05:00 PM	118	10	128	**37**	81	118	**25**	**83**	**108**	**354**
05:15 PM	**121**	**15**	**136**	35	88	123	16	73	89	348
05:30 PM	114	15	129	35	**95**	**130**	20	48	68	327
05:45 PM	106	8	114	29	84	113	15	55	70	297
Total Volume	459	48	507	136	348	484	76	259	335	1326
% App. Total	90.5	9.5		28.1	71.9		22.7	77.3		
PHF	.948	.800	.932	.919	.916	.931	.760	.780	.775	.936

Counts Unlimited, Inc.
PO Box 1178
Corona, CA 92878
(951) 268-6268

County of Imperial
N/S: S Dogwood Road
E/W: W McCabe Road (South)
Weather: Clear

File Name : 14_CIM_Dog_McC S PM
Site Code : 05724265
Start Date : 3/21/2024
Page No : 2

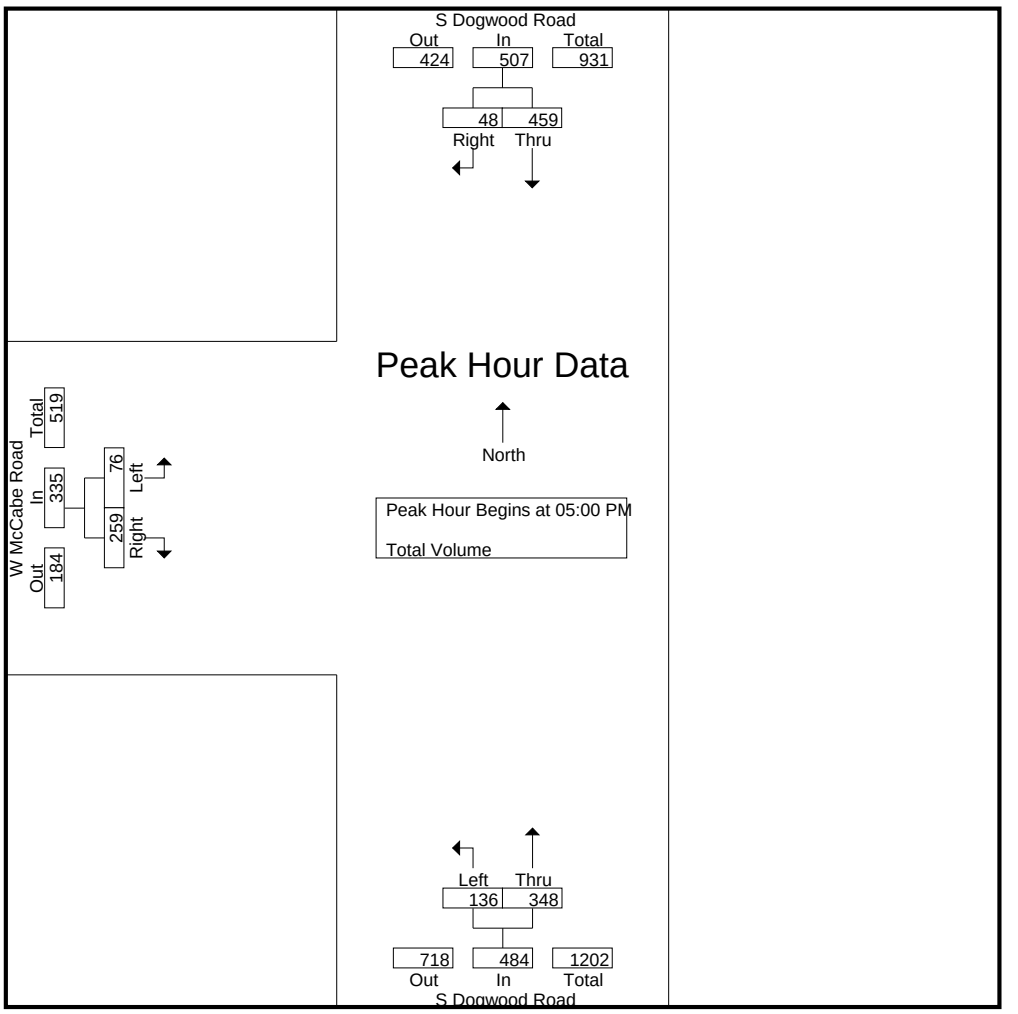

Peak Hour Analysis From 04:00 PM to 05:45 PM - Peak 1 of 1
Peak Hour for Each Approach Begins at:

	05:00 PM			05:00 PM			05:00 PM		
+0 mins.	118	10	128	**37**	81	118	**25**	**83**	**108**
+15 mins.	**121**	**15**	**136**	35	88	123	16	73	89
+30 mins.	114	15	129	35	**95**	**130**	20	48	68
+45 mins.	106	8	114	29	84	113	15	55	70
Total Volume	459	48	507	136	348	484	76	259	335
% App. Total	90.5	9.5		28.1	71.9		22.7	77.3	
PHF	.948	.800	.932	.919	.916	.931	.760	.780	.775

Counts Unlimited, Inc.
PO Box 1178
Corona, CA 92878
(951) 268-6268

County of Imperial
N/S: S Dogwood Road
E/W: E McCabe Road (North)
Weather: Clear

File Name : 15_CIM_Dog_McC N AM
Site Code : 05724265
Start Date : 3/21/2024
Page No : 1

Groups Printed- Total Volume

	S Dogwood Road Southbound			E McCabe Road Westbound			S Dogwood Road Northbound			
Start Time	Left	Thru	App. Total	Left	Right	App. Total	Thru	Right	App. Total	Int. Total
07:00 AM	0	33	33	2	5	7	67	7	74	114
07:15 AM	1	33	34	8	0	8	99	9	108	150
07:30 AM	2	45	47	8	4	12	144	14	158	217
07:45 AM	4	60	64	12	11	23	139	10	149	236
Total	7	171	178	30	20	50	449	40	489	717
08:00 AM	1	58	59	6	2	8	106	5	111	178
08:15 AM	0	40	40	6	13	19	93	3	96	155
08:30 AM	2	51	53	6	10	16	69	3	72	141
08:45 AM	0	28	28	2	11	13	71	7	78	119
Total	3	177	180	20	36	56	339	18	357	593
Grand Total	10	348	358	50	56	106	788	58	846	1310
Apprch %	2.8	97.2		47.2	52.8		93.1	6.9		
Total %	0.8	26.6	27.3	3.8	4.3	8.1	60.2	4.4	64.6	

	S Dogwood Road Southbound			E McCabe Road Westbound			S Dogwood Road Northbound			
Start Time	Left	Thru	App. Total	Left	Right	App. Total	Thru	Right	App. Total	Int. Total
Peak Hour Analysis From 07:00 AM to 08:45 AM - Peak 1 of 1										
Peak Hour for Entire Intersection Begins at 07:30 AM										
07:30 AM	2	45	47	8	4	12	**144**	**14**	**158**	217
07:45 AM	**4**	**60**	**64**	**12**	11	**23**	139	10	149	**236**
08:00 AM	1	58	59	6	2	8	106	5	111	178
08:15 AM	0	40	40	6	**13**	19	93	3	96	155
Total Volume	7	203	210	32	30	62	482	32	514	786
% App. Total	3.3	96.7		51.6	48.4		93.8	6.2		
PHF	.438	.846	.820	.667	.577	.674	.837	.571	.813	.833

Counts Unlimited, Inc.
PO Box 1178
Corona, CA 92878
(951) 268-6268

County of Imperial
N/S: S Dogwood Road
E/W: E McCabe Road (North)
Weather: Clear

File Name : 15_CIM_Dog_McC N AM
Site Code : 05724265
Start Date : 3/21/2024
Page No : 2

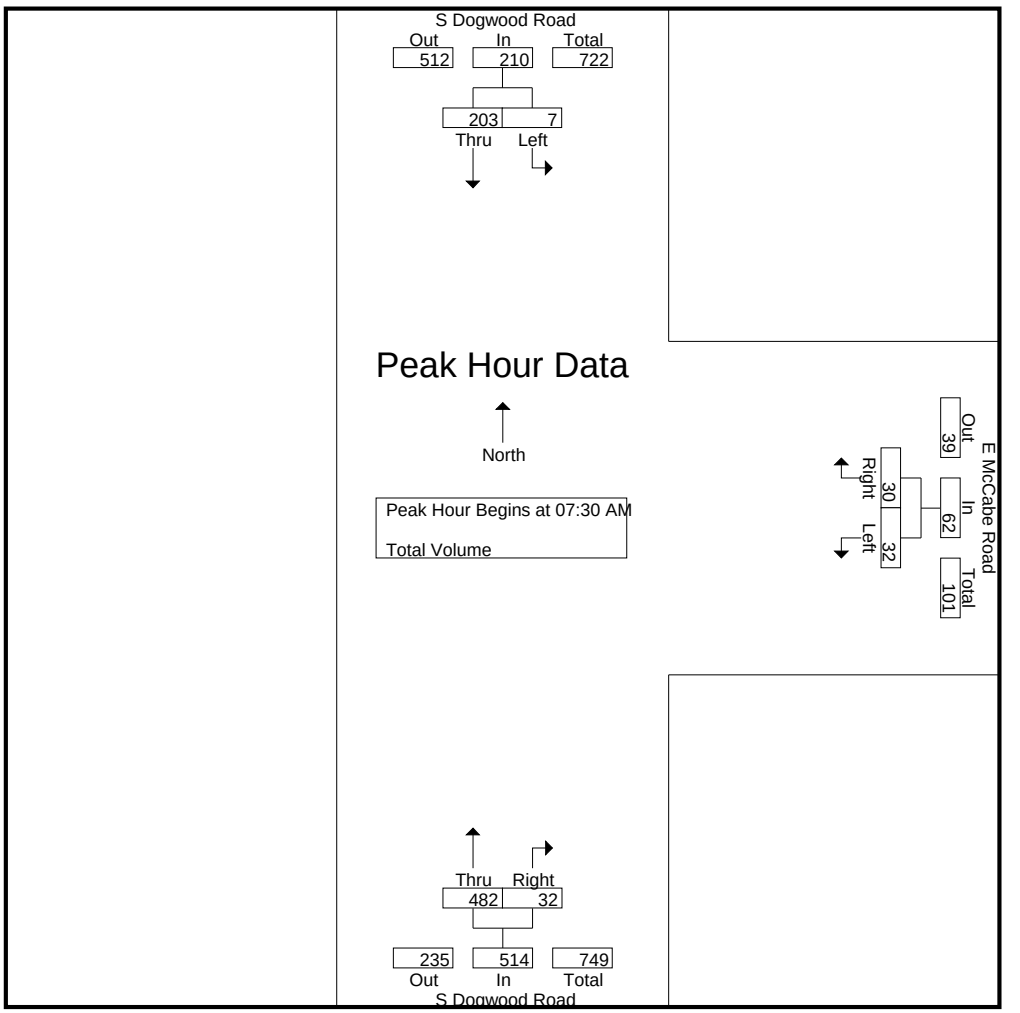

Peak Hour Analysis From 07:00 AM to 08:45 AM - Peak 1 of 1
Peak Hour for Each Approach Begins at:

	07:45 AM			07:45 AM			07:15 AM		
+0 mins.	**4**	**60**	**64**	**12**	11	**23**	99	9	108
+15 mins.	1	58	59	6	2	8	**144**	**14**	**158**
+30 mins.	0	40	40	6	**13**	19	139	10	149
+45 mins.	2	51	53	6	10	16	106	5	111
Total Volume	7	209	216	30	36	66	488	38	526
% App. Total	3.2	96.8		45.5	54.5		92.8	7.2	
PHF	.438	.871	.844	.625	.692	.717	.847	.679	.832

Counts Unlimited, Inc.
PO Box 1178
Corona, CA 92878
(951) 268-6268

County of Imperial
N/S: S Dogwood Road
E/W: E McCabe Road (North)
Weather: Clear

File Name : 15_CIM_Dog_McC N PM
Site Code : 05724265
Start Date : 3/21/2024
Page No : 1

Groups Printed- Total Volume

	S Dogwood Road Southbound			E McCabe Road Westbound			S Dogwood Road Northbound			
Start Time	Left	Thru	App. Total	Left	Right	App. Total	Thru	Right	App. Total	Int. Total
04:00 PM	9	125	134	9	10	19	88	10	98	251
04:15 PM	4	116	120	11	10	21	83	5	88	229
04:30 PM	12	117	129	15	11	26	84	4	88	243
04:45 PM	9	101	110	5	10	15	82	8	90	215
Total	34	459	493	40	41	81	337	27	364	938
05:00 PM	15	119	134	4	17	21	102	4	106	261
05:15 PM	8	127	135	8	11	19	94	8	102	256
05:30 PM	11	125	136	7	7	14	110	6	116	266
05:45 PM	3	111	114	5	11	16	91	5	96	226
Total	37	482	519	24	46	70	397	23	420	1009
Grand Total	71	941	1012	64	87	151	734	50	784	1947
Apprch %	7	93		42.4	57.6		93.6	6.4		
Total %	3.6	48.3	52	3.3	4.5	7.8	37.7	2.6	40.3	

	S Dogwood Road Southbound			E McCabe Road Westbound			S Dogwood Road Northbound			
Start Time	Left	Thru	App. Total	Left	Right	App. Total	Thru	Right	App. Total	Int. Total
Peak Hour Analysis From 04:00 PM to 05:45 PM - Peak 1 of 1										
Peak Hour for Entire Intersection Begins at 05:00 PM										
05:00 PM	**15**	119	134	4	**17**	**21**	102	4	106	261
05:15 PM	8	**127**	135	**8**	11	19	94	**8**	102	256
05:30 PM	11	125	**136**	7	7	14	**110**	6	**116**	**266**
05:45 PM	3	111	114	5	11	16	91	5	96	226
Total Volume	37	482	519	24	46	70	397	23	420	1009
% App. Total	7.1	92.9		34.3	65.7		94.5	5.5		
PHF	.617	.949	.954	.750	.676	.833	.902	.719	.905	.948

Counts Unlimited, Inc.
PO Box 1178
Corona, CA 92878
(951) 268-6268

County of Imperial
N/S: S Dogwood Road
E/W: E McCabe Road (North)
Weather: Clear

File Name : 15_CIM_Dog_McC N PM
Site Code : 05724265
Start Date : 3/21/2024
Page No : 2

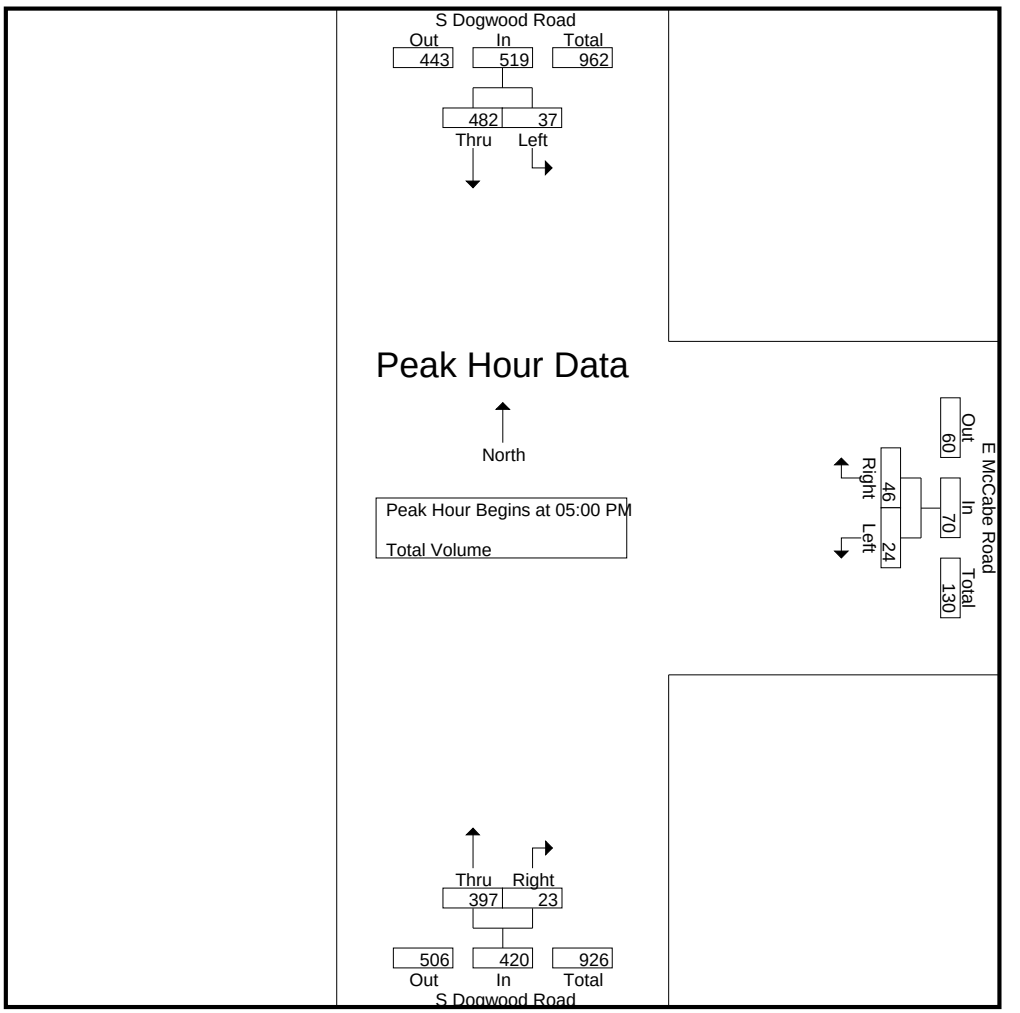

Peak Hour Analysis From 04:00 PM to 05:45 PM - Peak 1 of 1
Peak Hour for Each Approach Begins at:

	05:00 PM			04:15 PM			05:00 PM		
+0 mins.	**15**	119	134	11	10	21	102	4	106
+15 mins.	8	**127**	135	**15**	11	**26**	94	**8**	102
+30 mins.	11	125	**136**	5	10	15	**110**	6	**116**
+45 mins.	3	111	114	4	**17**	21	91	5	96
Total Volume	37	482	519	35	48	83	397	23	420
% App. Total	7.1	92.9		42.2	57.8		94.5	5.5	
PHF	.617	.949	.954	.583	.706	.798	.902	.719	.905

Counts Unlimited, Inc.
PO Box 1178
Corona, CA 92878
(951) 268-6268

County of Imperial
N/S: Pitzer Road
E/W: E McCabe Road
Weather: Clear

File Name : 16_CIM_Pit_E McC AM
Site Code : 05724265
Start Date : 3/21/2024
Page No : 1

Groups Printed- Total Volume

	Pitzer Road Southbound				E McCabe Road Westbound				Pitzer Road Northbound				E McCabe Road Eastbound				
Start Time	Left	Thru	Right	App. Total	Left	Thru	Right	App. Total	Left	Thru	Right	App. Total	Left	Thru	Right	App. Total	Int. Total
07:00 AM	5	0	1	6	0	9	8	17	0	6	7	13	0	7	1	8	44
07:15 AM	4	1	0	5	2	4	14	20	0	8	8	16	1	8	0	9	50
07:30 AM	3	0	0	3	5	13	27	45	0	8	14	22	0	11	0	11	81
07:45 AM	3	1	1	5	6	17	37	60	3	7	10	20	1	16	1	18	103
Total	15	2	2	19	13	43	86	142	3	29	39	71	2	42	2	46	278
08:00 AM	4	1	1	6	7	11	28	46	0	4	9	13	0	7	0	7	72
08:15 AM	5	2	1	8	3	16	24	43	1	2	6	9	0	2	1	3	63
08:30 AM	3	1	0	4	0	16	23	39	0	0	1	1	0	5	0	5	49
08:45 AM	8	0	0	8	2	12	31	45	0	5	3	8	0	5	0	5	66
Total	20	4	2	26	12	55	106	173	1	11	19	31	0	19	1	20	250
Grand Total	35	6	4	45	25	98	192	315	4	40	58	102	2	61	3	66	528
Apprch %	77.8	13.3	8.9		7.9	31.1	61		3.9	39.2	56.9		3	92.4	4.5		
Total %	6.6	1.1	0.8	8.5	4.7	18.6	36.4	59.7	0.8	7.6	11	19.3	0.4	11.6	0.6	12.5	

	Pitzer Road Southbound				E McCabe Road Westbound				Pitzer Road Northbound				E McCabe Road Eastbound				
Start Time	Left	Thru	Right	App. Total	Left	Thru	Right	App. Total	Left	Thru	Right	App. Total	Left	Thru	Right	App. Total	Int. Total
Peak Hour Analysis From 07:00 AM to 08:45 AM - Peak 1 of 1																	
Peak Hour for Entire Intersection Begins at 07:30 AM																	
07:30 AM	3	0	0	3	5	13	27	45	0	**8**	**14**	**22**	0	11	0	11	81
07:45 AM	3	1	**1**	5	6	**17**	**37**	**60**	**3**	7	10	20	**1**	**16**	**1**	**18**	**103**
08:00 AM	4	1	1	6	**7**	11	28	46	0	4	9	13	0	7	0	7	72
08:15 AM	**5**	**2**	1	**8**	3	16	24	43	1	2	6	9	0	2	1	3	63
Total Volume	15	4	3	22	21	57	116	194	4	21	39	64	1	36	2	39	319
% App. Total	68.2	18.2	13.6		10.8	29.4	59.8		6.2	32.8	60.9		2.6	92.3	5.1		
PHF	.750	.500	.750	.688	.750	.838	.784	.808	.333	.656	.696	.727	.250	.563	.500	.542	.774

Counts Unlimited, Inc.
PO Box 1178
Corona, CA 92878
(951) 268-6268

County of Imperial
N/S: Pitzer Road
E/W: E McCabe Road
Weather: Clear

File Name : 16_CIM_Pit_E McC AM
Site Code : 05724265
Start Date : 3/21/2024
Page No : 2

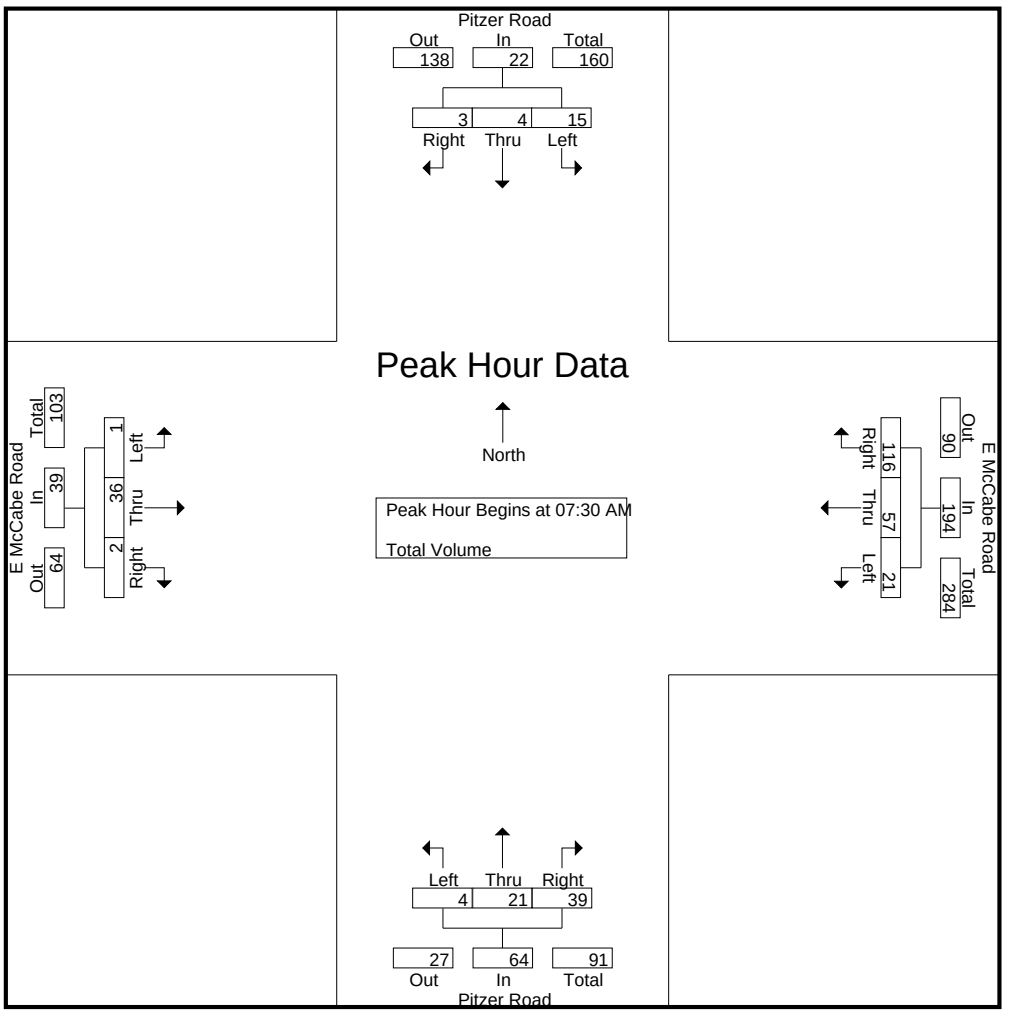

Peak Hour Analysis From 07:00 AM to 08:45 AM - Peak 1 of 1
Peak Hour for Each Approach Begins at:

	08:00 AM				07:30 AM				07:00 AM				07:00 AM			
+0 mins.	4	1	**1**	6	5	13	27	45	0	6	7	13	0	7	**1**	8
+15 mins.	5	**2**	1	**8**	6	**17**	**37**	**60**	0	**8**	8	16	**1**	8	0	9
+30 mins.	3	1	0	4	**7**	11	28	46	0	8	**14**	**22**	0	11	0	11
+45 mins.	**8**	0	0	8	3	16	24	43	**3**	7	10	20	1	**16**	1	**18**
Total Volume	20	4	2	26	21	57	116	194	3	29	39	71	2	42	2	46
% App. Total	76.9	15.4	7.7		10.8	29.4	59.8		4.2	40.8	54.9		4.3	91.3	4.3	
PHF	.625	.500	.500	.813	.750	.838	.784	.808	.250	.906	.696	.807	.500	.656	.500	.639

Counts Unlimited, Inc.
PO Box 1178
Corona, CA 92878
(951) 268-6268

County of Imperial
N/S: Pitzer Road
E/W: E McCabe Road
Weather: Clear

File Name : 16_CIM_Pit_E McC PM
Site Code : 05724265
Start Date : 3/21/2024
Page No : 1

Groups Printed- Total Volume

	Pitzer Road Southbound				E McCabe Road Westbound				Pitzer Road Northbound				E McCabe Road Eastbound				
Start Time	Left	Thru	Right	App. Total	Left	Thru	Right	App. Total	Left	Thru	Right	App. Total	Left	Thru	Right	App. Total	Int. Total
04:00 PM	46	5	0	51	8	19	39	66	1	2	7	10	1	19	0	20	147
04:15 PM	53	4	0	57	17	20	45	82	0	2	3	5	1	6	0	7	151
04:30 PM	39	2	0	41	5	25	37	67	1	2	7	10	0	10	3	13	131
04:45 PM	51	2	0	53	11	12	32	55	1	3	4	8	2	17	1	20	136
Total	189	13	0	202	41	76	153	270	3	9	21	33	4	52	4	60	565
05:00 PM	53	9	0	62	1	25	32	58	1	1	1	3	0	16	0	16	139
05:15 PM	56	6	1	63	12	14	38	64	0	2	2	4	0	17	0	17	148
05:30 PM	61	7	1	69	7	13	40	60	0	0	2	2	1	16	0	17	148
05:45 PM	52	3	0	55	8	15	35	58	0	6	1	7	0	8	0	8	128
Total	222	25	2	249	28	67	145	240	1	9	6	16	1	57	0	58	563
Grand Total	411	38	2	451	69	143	298	510	4	18	27	49	5	109	4	118	1128
Apprch %	91.1	8.4	0.4		13.5	28	58.4		8.2	36.7	55.1		4.2	92.4	3.4		
Total %	36.4	3.4	0.2	40	6.1	12.7	26.4	45.2	0.4	1.6	2.4	4.3	0.4	9.7	0.4	10.5	

	Pitzer Road Southbound				E McCabe Road Westbound				Pitzer Road Northbound				E McCabe Road Eastbound				
Start Time	Left	Thru	Right	App. Total	Left	Thru	Right	App. Total	Left	Thru	Right	App. Total	Left	Thru	Right	App. Total	Int. Total
Peak Hour Analysis From 04:00 PM to 05:45 PM - Peak 1 of 1																	
Peak Hour for Entire Intersection Begins at 04:45 PM																	
04:45 PM	51	2	0	53	11	12	32	55	**1**	**3**	**4**	**8**	**2**	**17**	**1**	**20**	136
05:00 PM	53	**9**	0	62	1	**25**	32	58	1	1	1	3	0	16	0	16	139
05:15 PM	56	6	**1**	63	**12**	14	38	**64**	0	2	2	4	0	17	0	17	**148**
05:30 PM	**61**	7	1	**69**	7	13	**40**	60	0	0	2	2	1	16	0	17	148
Total Volume	221	24	2	247	31	64	142	237	2	6	9	17	3	66	1	70	571
% App. Total	89.5	9.7	0.8		13.1	27	59.9		11.8	35.3	52.9		4.3	94.3	1.4		
PHF	.906	.667	.500	.895	.646	.640	.888	.926	.500	.500	.563	.531	.375	.971	.250	.875	.965

Counts Unlimited, Inc.
PO Box 1178
Corona, CA 92878
(951) 268-6268

County of Imperial
N/S: Pitzer Road
E/W: E McCabe Road
Weather: Clear

File Name : 16_CIM_Pit_E McC PM
Site Code : 05724265
Start Date : 3/21/2024
Page No : 2

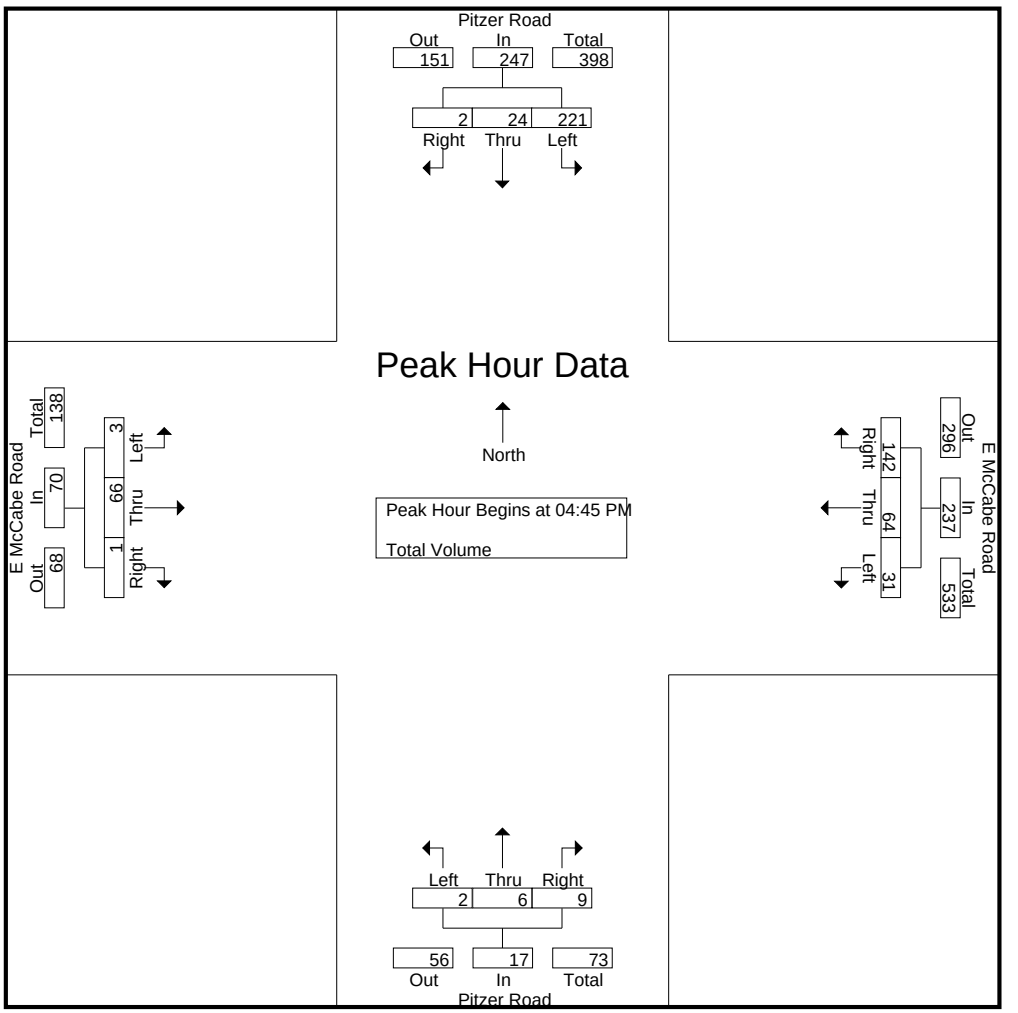

Peak Hour Analysis From 04:00 PM to 05:45 PM - Peak 1 of 1
Peak Hour for Each Approach Begins at:

	05:00 PM				04:00 PM				04:00 PM				04:45 PM			
+0 mins.	53	**9**	0	62	8	19	39	66	**1**	2	**7**	**10**	**2**	**17**	**1**	**20**
+15 mins.	56	6	**1**	63	**17**	20	**45**	**82**	0	2	3	5	0	16	0	16
+30 mins.	**61**	7	1	**69**	5	**25**	37	67	1	2	7	10	0	17	0	17
+45 mins.	52	3	0	55	11	12	32	55	1	**3**	4	8	1	16	0	17
Total Volume	222	25	2	249	41	76	153	270	3	9	21	33	3	66	1	70
% App. Total	89.2	10	0.8		15.2	28.1	56.7		9.1	27.3	63.6		4.3	94.3	1.4	
PHF	.910	.694	.500	.902	.603	.760	.850	.823	.750	.750	.750	.825	.375	.971	.250	.875

Counts Unlimited, Inc.
PO Box 1178
Corona, CA 92878
(951) 268-6268

County of Imperial
N/S: SR-111
E/W: E McCabe Road
Weather: Clear

File Name : 17_CIM_SR111_E McC AM
Site Code : 05724265
Start Date : 3/21/2024
Page No : 1

Groups Printed- Total Volume

	SR-111 Southbound				E McCabe Road Westbound				SR-111 Northbound				E McCabe Road Eastbound				
Start Time	Left	Thru	Right	App. Total	Left	Thru	Right	App. Total	Left	Thru	Right	App. Total	Left	Thru	Right	App. Total	Int. Total
07:00 AM	1	124	1	126	2	10	2	14	7	210	0	217	12	2	4	18	375
07:15 AM	2	173	5	180	0	4	7	11	10	302	4	316	11	7	10	28	535
07:30 AM	5	202	7	214	0	7	10	17	30	364	14	408	15	7	5	27	666
07:45 AM	6	311	11	328	1	16	5	22	40	335	1	376	17	5	8	30	756
Total	14	810	24	848	3	37	24	64	87	1211	19	1317	55	21	27	103	2332
08:00 AM	4	214	9	227	0	11	5	16	24	209	2	235	12	3	9	24	502
08:15 AM	5	215	6	226	0	8	6	14	27	260	2	289	5	1	7	13	542
08:30 AM	3	201	3	207	0	10	4	14	31	216	1	248	2	3	7	12	481
08:45 AM	7	227	3	237	0	10	2	12	34	252	0	286	3	5	9	17	552
Total	19	857	21	897	0	39	17	56	116	937	5	1058	22	12	32	66	2077
Grand Total	33	1667	45	1745	3	76	41	120	203	2148	24	2375	77	33	59	169	4409
Apprch %	1.9	95.5	2.6		2.5	63.3	34.2		8.5	90.4	1		45.6	19.5	34.9		
Total %	0.7	37.8	1	39.6	0.1	1.7	0.9	2.7	4.6	48.7	0.5	53.9	1.7	0.7	1.3	3.8	

	SR-111 Southbound				E McCabe Road Westbound				SR-111 Northbound				E McCabe Road Eastbound				
Start Time	Left	Thru	Right	App. Total	Left	Thru	Right	App. Total	Left	Thru	Right	App. Total	Left	Thru	Right	App. Total	Int. Total
Peak Hour Analysis From 07:00 AM to 08:45 AM - Peak 1 of 1																	
Peak Hour for Entire Intersection Begins at 07:30 AM																	
07:30 AM	5	202	7	214	0	7	**10**	17	30	**364**	**14**	**408**	15	**7**	5	27	666
07:45 AM	**6**	**311**	**11**	**328**	**1**	**16**	5	**22**	**40**	335	1	376	**17**	5	8	**30**	**756**
08:00 AM	4	214	9	227	0	11	5	16	24	209	2	235	12	3	**9**	24	502
08:15 AM	5	215	6	226	0	8	6	14	27	260	2	289	5	1	7	13	542
Total Volume	20	942	33	995	1	42	26	69	121	1168	19	1308	49	16	29	94	2466
% App. Total	2	94.7	3.3		1.4	60.9	37.7		9.3	89.3	1.5		52.1	17	30.9		
PHF	.833	.757	.750	.758	.250	.656	.650	.784	.756	.802	.339	.801	.721	.571	.806	.783	.815

Counts Unlimited, Inc.
PO Box 1178
Corona, CA 92878
(951) 268-6268

County of Imperial
N/S: SR-111
E/W: E McCabe Road
Weather: Clear

File Name : 17_CIM_SR111_E McC AM
Site Code : 05724265
Start Date : 3/21/2024
Page No : 2

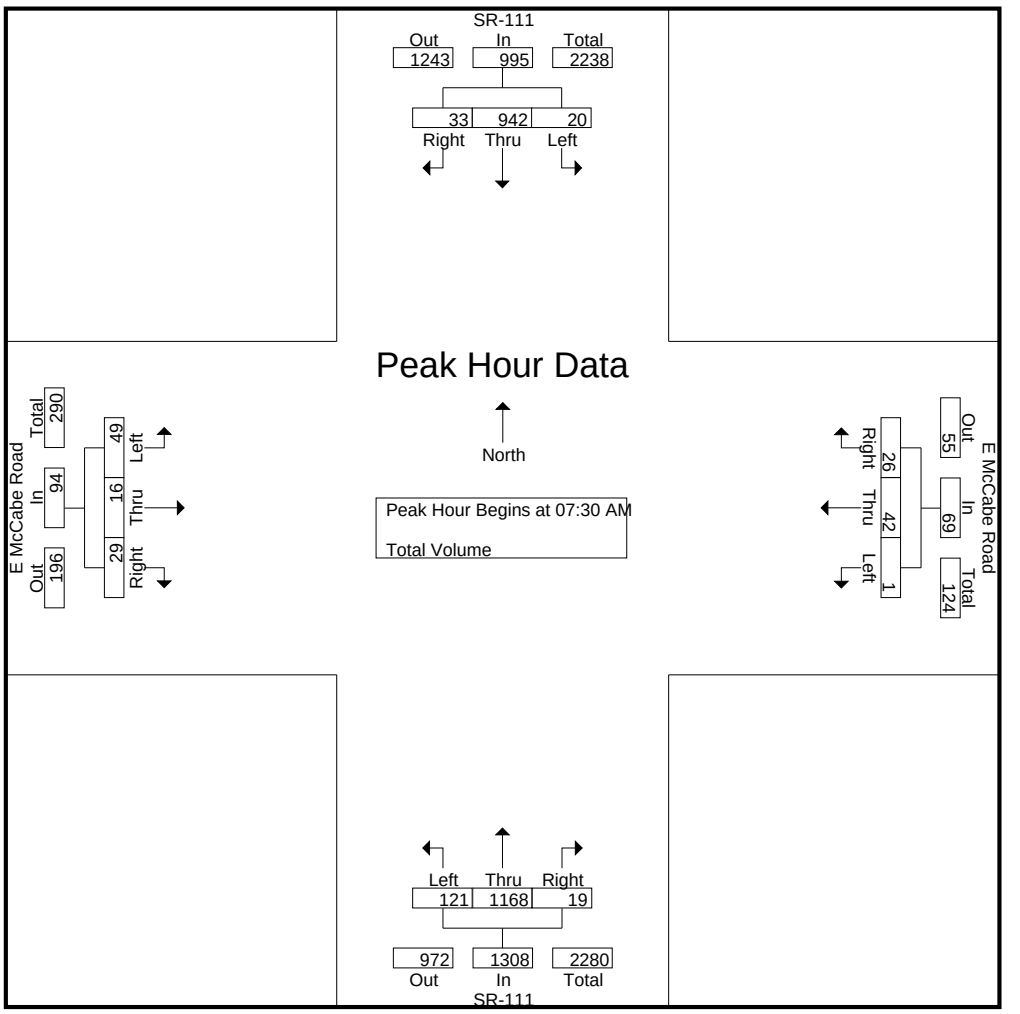

Peak Hour Analysis From 07:00 AM to 08:45 AM - Peak 1 of 1
Peak Hour for Each Approach Begins at:

	07:30 AM				07:30 AM				07:15 AM				07:15 AM			
+0 mins.	5	202	7	214	0	7	**10**	17	10	302	4	316	11	**7**	**10**	28
+15 mins.	**6**	**311**	**11**	**328**	**1**	**16**	5	**22**	30	**364**	**14**	**408**	15	7	5	27
+30 mins.	4	214	9	227	0	11	5	16	**40**	335	1	376	**17**	5	8	**30**
+45 mins.	5	215	6	226	0	8	6	14	24	209	2	235	12	3	9	24
Total Volume	20	942	33	995	1	42	26	69	104	1210	21	1335	55	22	32	109
% App. Total	2	94.7	3.3		1.4	60.9	37.7		7.8	90.6	1.6		50.5	20.2	29.4	
PHF	.833	.757	.750	.758	.250	.656	.650	.784	.650	.831	.375	.818	.809	.786	.800	.908

Counts Unlimited, Inc.
PO Box 1178
Corona, CA 92878
(951) 268-6268

County of Imperial
N/S: SR-111
E/W: E McCabe Road
Weather: Clear

File Name : 17_CIM_SR111_E McC PM
Site Code : 05724265
Start Date : 3/21/2024
Page No : 1

Groups Printed- Total Volume

	SR-111 Southbound				E McCabe Road Westbound				SR-111 Northbound				E McCabe Road Eastbound				
Start Time	Left	Thru	Right	App. Total	Left	Thru	Right	App. Total	Left	Thru	Right	App. Total	Left	Thru	Right	App. Total	Int. Total
04:00 PM	21	346	20	387	1	15	5	21	33	205	3	241	6	15	46	67	716
04:15 PM	21	370	20	411	2	7	8	17	50	190	1	241	7	5	59	71	740
04:30 PM	4	347	11	362	3	11	6	20	38	213	1	252	8	7	39	54	688
04:45 PM	10	377	17	404	1	3	2	6	43	259	1	303	5	6	58	69	782
Total	56	1440	68	1564	7	36	21	64	164	867	6	1037	26	33	202	261	2926
05:00 PM	8	338	4	350	3	4	5	12	38	210	2	250	5	13	62	80	692
05:15 PM	9	389	14	412	1	10	2	13	39	268	1	308	4	13	58	75	808
05:30 PM	20	343	12	375	0	6	4	10	47	233	2	282	6	5	65	76	743
05:45 PM	14	339	9	362	0	5	7	12	40	220	0	260	4	9	47	60	694
Total	51	1409	39	1499	4	25	18	47	164	931	5	1100	19	40	232	291	2937
Grand Total	107	2849	107	3063	11	61	39	111	328	1798	11	2137	45	73	434	552	5863
Apprch %	3.5	93	3.5		9.9	55	35.1		15.3	84.1	0.5		8.2	13.2	78.6		
Total %	1.8	48.6	1.8	52.2	0.2	1	0.7	1.9	5.6	30.7	0.2	36.4	0.8	1.2	7.4	9.4	

	SR-111 Southbound				E McCabe Road Westbound				SR-111 Northbound				E McCabe Road Eastbound				
Start Time	Left	Thru	Right	App. Total	Left	Thru	Right	App. Total	Left	Thru	Right	App. Total	Left	Thru	Right	App. Total	Int. Total
Peak Hour Analysis From 04:00 PM to 05:45 PM - Peak 1 of 1																	
Peak Hour for Entire Intersection Begins at 04:45 PM																	
04:45 PM	10	377	**17**	404	1	3	2	6	43	259	1	303	5	6	58	69	782
05:00 PM	8	338	4	350	**3**	4	**5**	12	38	210	**2**	250	5	**13**	62	**80**	692
05:15 PM	9	**389**	14	**412**	1	**10**	2	**13**	39	**268**	1	**308**	4	13	58	75	**808**
05:30 PM	**20**	343	12	375	0	6	4	10	**47**	233	2	282	**6**	5	**65**	76	743
Total Volume	47	1447	47	1541	5	23	13	41	167	970	6	1143	20	37	243	300	3025
% App. Total	3	93.9	3		12.2	56.1	31.7		14.6	84.9	0.5		6.7	12.3	81		
PHF	.588	.930	.691	.935	.417	.575	.650	.788	.888	.905	.750	.928	.833	.712	.935	.938	.936

Counts Unlimited, Inc.
PO Box 1178
Corona, CA 92878
(951) 268-6268

County of Imperial
N/S: SR-111
E/W: E McCabe Road
Weather: Clear

File Name : 17_CIM_SR111_E McC PM
Site Code : 05724265
Start Date : 3/21/2024
Page No : 2

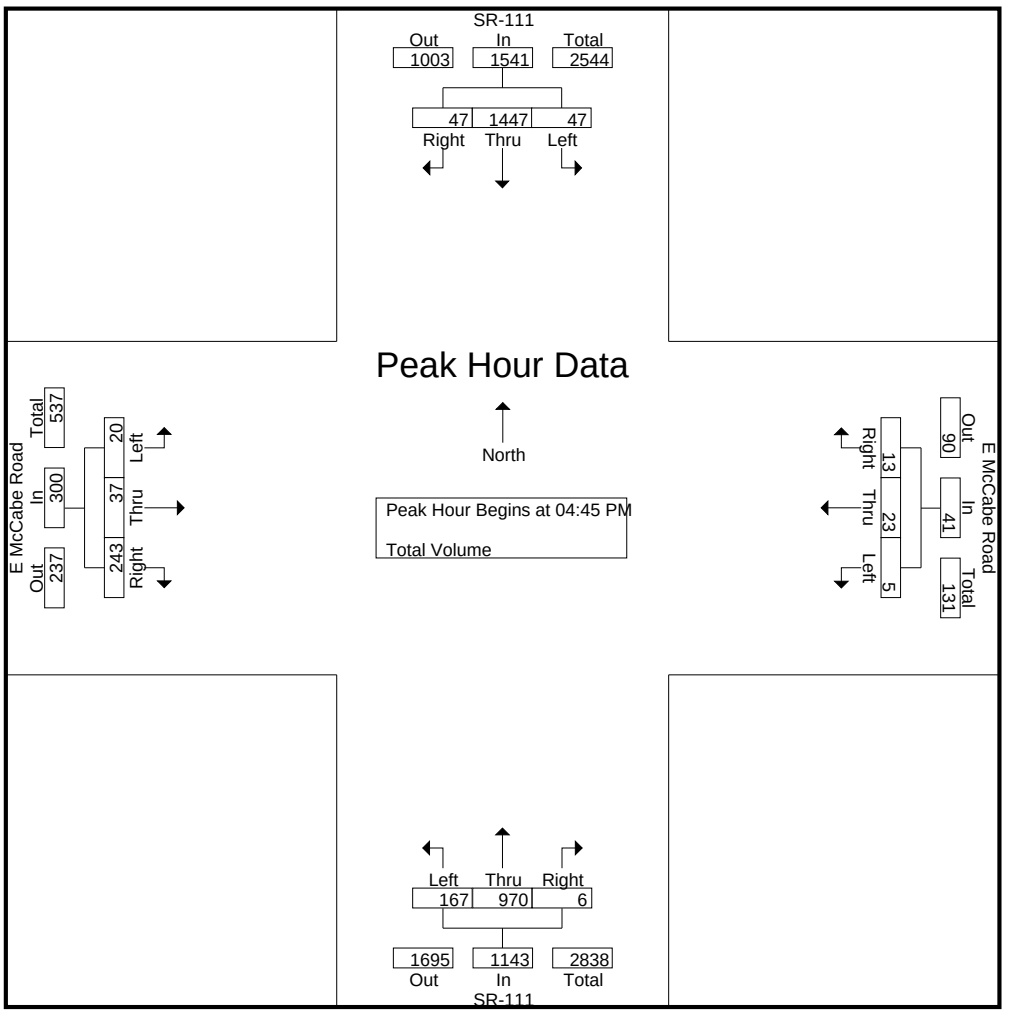

Peak Hour Analysis From 04:00 PM to 05:45 PM - Peak 1 of 1
Peak Hour for Each Approach Begins at:

	04:00 PM				04:00 PM				04:45 PM				04:45 PM			
+0 mins.	**21**	346	**20**	387	1	**15**	5	**21**	43	259	1	303	5	6	58	69
+15 mins.	21	370	20	**411**	2	7	**8**	17	38	210	**2**	250	5	**13**	62	**80**
+30 mins.	4	347	11	362	**3**	11	6	20	39	**268**	1	**308**	4	13	58	75
+45 mins.	10	**377**	17	404	1	3	2	6	**47**	233	2	282	**6**	5	**65**	76
Total Volume	56	1440	68	1564	7	36	21	64	167	970	6	1143	20	37	243	300
% App. Total	3.6	92.1	4.3		10.9	56.2	32.8		14.6	84.9	0.5		6.7	12.3	81	
PHF	.667	.955	.850	.951	.583	.600	.656	.762	.888	.905	.750	.928	.833	.712	.935	.938

Counts Unlimited, Inc.
PO Box 1178
Corona, CA 92878
(951) 268-6268

County of Imperial
N/S: Dogwood Road
E/W: Heber Road (SR-86)
Weather: Clear

File Name : 18_CIM_Dog_Heb AM
Site Code : 05724265
Start Date : 3/21/2024
Page No : 1

Groups Printed- Total Volume

	S Dogwood Road Southbound				E Heber Road Westbound				Dogwood Road Northbound				W Heber Road Eastbound				
Start Time	Left	Thru	Right	App. Total	Left	Thru	Right	App. Total	Left	Thru	Right	App. Total	Left	Thru	Right	App. Total	Int. Total
07:00 AM	18	29	6	53	4	18	11	33	18	27	7	52	2	28	11	41	179
07:15 AM	40	25	11	76	2	34	24	60	28	31	4	63	1	23	22	46	245
07:30 AM	54	31	37	122	11	50	26	87	36	34	3	73	2	31	23	56	338
07:45 AM	63	40	8	111	7	68	32	107	45	36	2	83	3	39	34	76	377
Total	175	125	62	362	24	170	93	287	127	128	16	271	8	121	90	219	1139
08:00 AM	55	36	7	98	9	43	57	109	23	36	5	64	5	29	22	56	327
08:15 AM	27	33	1	61	3	37	24	64	33	37	2	72	3	19	22	44	241
08:30 AM	26	28	2	56	6	27	13	46	33	29	2	64	2	22	18	42	208
08:45 AM	17	29	0	46	8	29	17	54	25	21	6	52	4	25	23	52	204
Total	125	126	10	261	26	136	111	273	114	123	15	252	14	95	85	194	980
Grand Total	300	251	72	623	50	306	204	560	241	251	31	523	22	216	175	413	2119
Apprch %	48.2	40.3	11.6		8.9	54.6	36.4		46.1	48	5.9		5.3	52.3	42.4		
Total %	14.2	11.8	3.4	29.4	2.4	14.4	9.6	26.4	11.4	11.8	1.5	24.7	1	10.2	8.3	19.5	

	S Dogwood Road Southbound				E Heber Road Westbound				Dogwood Road Northbound				W Heber Road Eastbound				
Start Time	Left	Thru	Right	App. Total	Left	Thru	Right	App. Total	Left	Thru	Right	App. Total	Left	Thru	Right	App. Total	Int. Total
Peak Hour Analysis From 07:00 AM to 08:45 AM - Peak 1 of 1																	
Peak Hour for Entire Intersection Begins at 07:15 AM																	
07:15 AM	40	25	11	76	2	34	24	60	28	31	4	63	1	23	22	46	245
07:30 AM	54	31	**37**	**122**	**11**	50	26	87	36	34	3	73	2	31	23	56	338
07:45 AM	**63**	**40**	8	111	7	**68**	32	107	**45**	**36**	2	**83**	3	**39**	**34**	**76**	**377**
08:00 AM	55	36	7	98	9	43	**57**	**109**	23	36	**5**	64	**5**	29	22	56	327
Total Volume	212	132	63	407	29	195	139	363	132	137	14	283	11	122	101	234	1287
% App. Total	52.1	32.4	15.5		8	53.7	38.3		46.6	48.4	4.9		4.7	52.1	43.2		
PHF	.841	.825	.426	.834	.659	.717	.610	.833	.733	.951	.700	.852	.550	.782	.743	.770	.853

Counts Unlimited, Inc.
PO Box 1178
Corona, CA 92878
(951) 268-6268

County of Imperial
N/S: Dogwood Road
E/W: Heber Road (SR-86)
Weather: Clear

File Name : 18_CIM_Dog_Heb AM
Site Code : 05724265
Start Date : 3/21/2024
Page No : 2

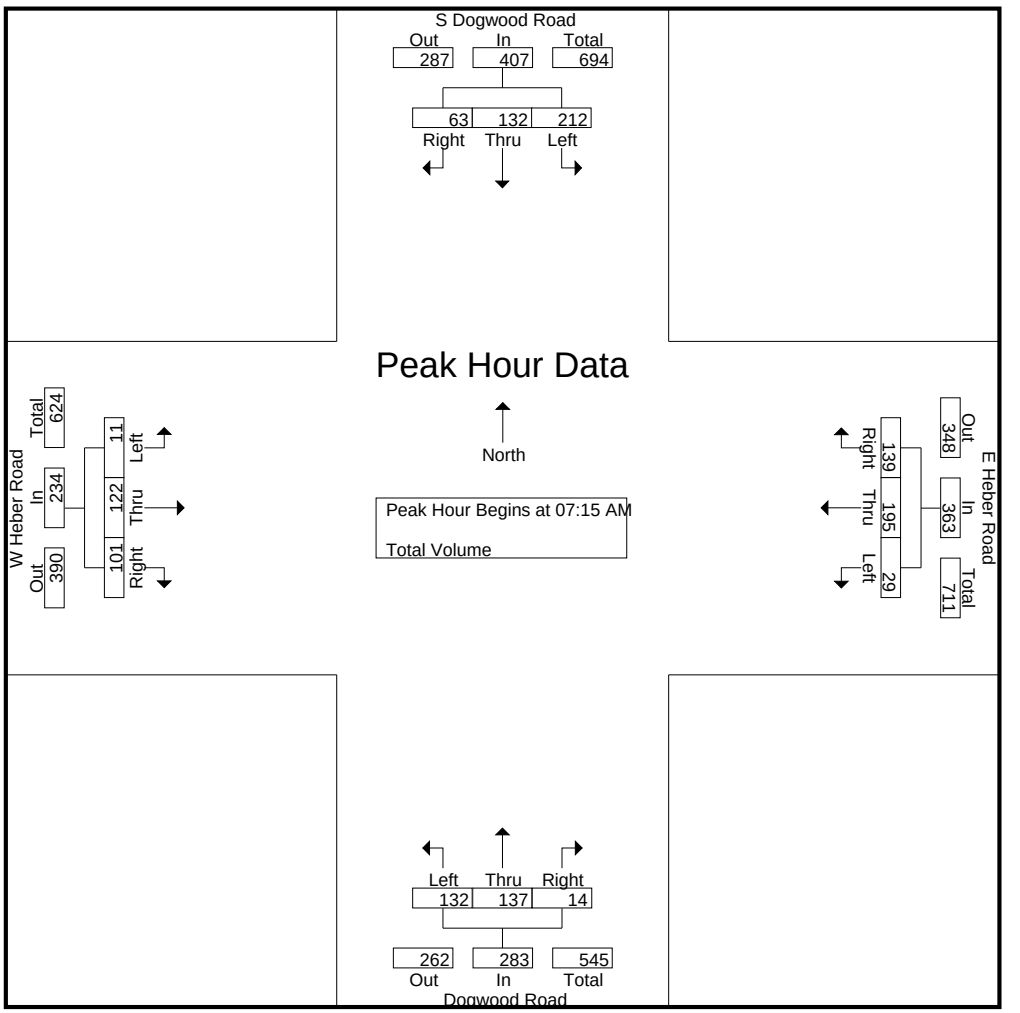

Peak Hour Analysis From 07:00 AM to 08:45 AM - Peak 1 of 1
Peak Hour for Each Approach Begins at:

	07:15 AM				07:30 AM				07:30 AM				07:15 AM			
+0 mins.	40	25	11	76	**11**	50	26	87	36	34	3	73	1	23	22	46
+15 mins.	54	31	**37**	**122**	7	**68**	32	107	**45**	36	2	**83**	2	31	23	56
+30 mins.	**63**	**40**	8	111	9	43	**57**	**109**	23	36	**5**	64	3	**39**	**34**	**76**
+45 mins.	55	36	7	98	3	37	24	64	33	**37**	2	72	**5**	29	22	56
Total Volume	212	132	63	407	30	198	139	367	137	143	12	292	11	122	101	234
% App. Total	52.1	32.4	15.5		8.2	54	37.9		46.9	49	4.1		4.7	52.1	43.2	
PHF	.841	.825	.426	.834	.682	.728	.610	.842	.761	.966	.600	.880	.550	.782	.743	.770

Counts Unlimited, Inc.
PO Box 1178
Corona, CA 92878
(951) 268-6268

County of Imperial
N/S: Dogwood Road
E/W: Heber Road (SR-86)
Weather: Clear

File Name : 18_CIM_Dog_Heb PM
Site Code : 05724265
Start Date : 3/21/2024
Page No : 1

Groups Printed- Total Volume

	S Dogwood Road Southbound				E Heber Road Westbound				Dogwood Road Northbound				W Heber Road Eastbound				
Start Time	Left	Thru	Right	App. Total	Left	Thru	Right	App. Total	Left	Thru	Right	App. Total	Left	Thru	Right	App. Total	Int. Total
04:00 PM	32	58	4	94	5	31	45	81	32	39	6	77	8	36	55	99	351
04:15 PM	36	67	7	110	0	25	38	63	26	37	1	64	4	45	48	97	334
04:30 PM	39	63	3	105	2	19	33	54	21	29	2	52	7	27	37	71	282
04:45 PM	29	46	3	78	4	18	28	50	23	26	3	52	5	29	53	87	267
Total	136	234	17	387	11	93	144	248	102	131	12	245	24	137	193	354	1234
05:00 PM	38	51	7	96	1	32	36	69	17	26	4	47	2	44	56	102	314
05:15 PM	40	65	1	106	5	23	39	67	16	46	3	65	4	49	69	122	360
05:30 PM	48	49	5	102	4	21	54	79	25	31	5	61	8	36	41	85	327
05:45 PM	57	57	2	116	4	15	49	68	13	40	4	57	8	43	44	95	336
Total	183	222	15	420	14	91	178	283	71	143	16	230	22	172	210	404	1337
Grand Total	319	456	32	807	25	184	322	531	173	274	28	475	46	309	403	758	2571
Apprch %	39.5	56.5	4		4.7	34.7	60.6		36.4	57.7	5.9		6.1	40.8	53.2		
Total %	12.4	17.7	1.2	31.4	1	7.2	12.5	20.7	6.7	10.7	1.1	18.5	1.8	12	15.7	29.5	

	S Dogwood Road Southbound				E Heber Road Westbound				Dogwood Road Northbound				W Heber Road Eastbound				
Start Time	Left	Thru	Right	App. Total	Left	Thru	Right	App. Total	Left	Thru	Right	App. Total	Left	Thru	Right	App. Total	Int. Total
Peak Hour Analysis From 04:00 PM to 05:45 PM - Peak 1 of 1																	
Peak Hour for Entire Intersection Begins at 05:00 PM																	
05:00 PM	38	51	**7**	96	1	**32**	36	69	17	26	4	47	2	44	56	102	314
05:15 PM	40	**65**	1	106	**5**	23	39	67	16	**46**	3	**65**	4	**49**	**69**	**122**	**360**
05:30 PM	48	49	5	102	4	21	**54**	**79**	**25**	31	**5**	61	**8**	36	41	85	327
05:45 PM	**57**	57	2	**116**	4	15	49	68	13	40	4	57	8	43	44	95	336
Total Volume	183	222	15	420	14	91	178	283	71	143	16	230	22	172	210	404	1337
% App. Total	43.6	52.9	3.6		4.9	32.2	62.9		30.9	62.2	7		5.4	42.6	52		
PHF	.803	.854	.536	.905	.700	.711	.824	.896	.710	.777	.800	.885	.688	.878	.761	.828	.928

Counts Unlimited, Inc.
PO Box 1178
Corona, CA 92878
(951) 268-6268

County of Imperial
N/S: Dogwood Road
E/W: Heber Road (SR-86)
Weather: Clear

File Name : 18_CIM_Dog_Heb PM
Site Code : 05724265
Start Date : 3/21/2024
Page No : 2

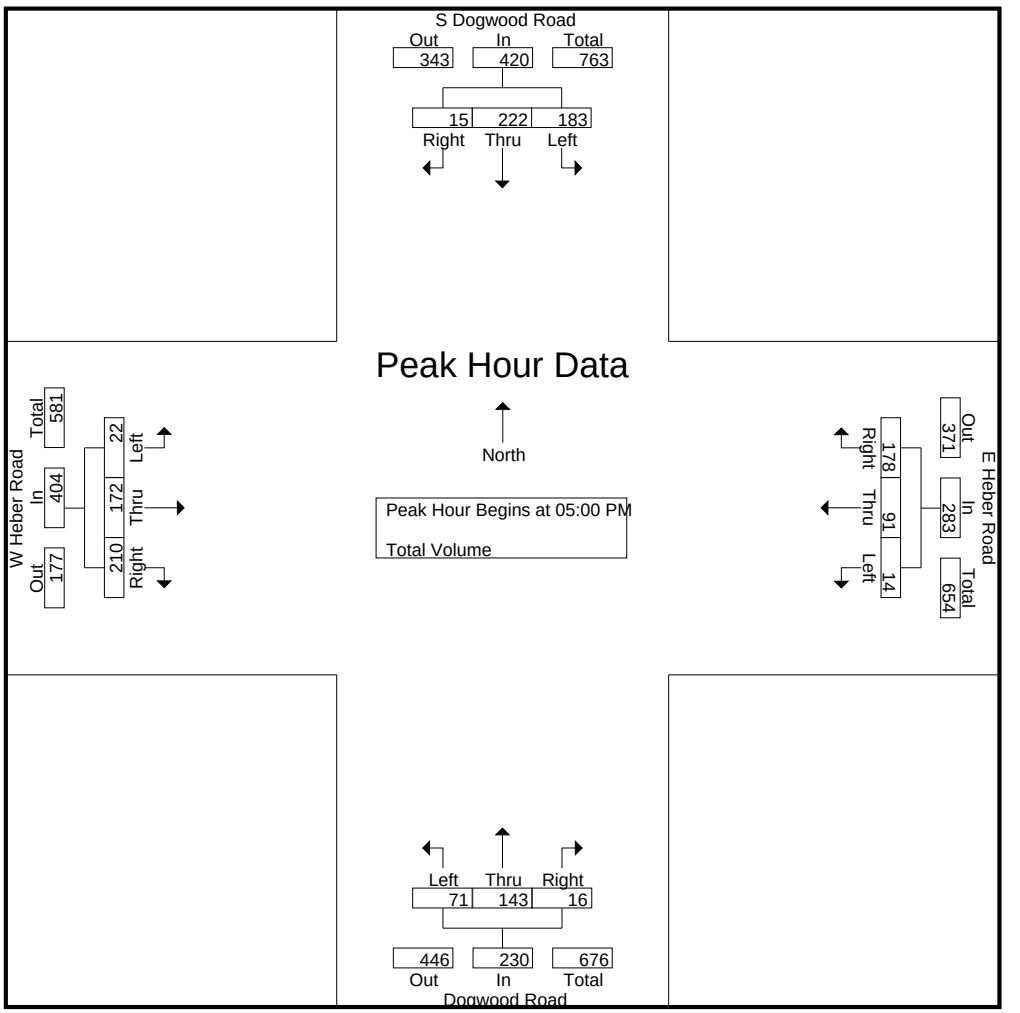

Peak Hour Analysis From 04:00 PM to 05:45 PM - Peak 1 of 1
Peak Hour for Each Approach Begins at:

	05:00 PM				05:00 PM				04:00 PM				05:00 PM			
+0 mins.	38	51	**7**	96	1	**32**	36	69	**32**	**39**	**6**	**77**	2	44	56	102
+15 mins.	40	**65**	1	106	**5**	23	39	67	26	37	1	64	4	**49**	**69**	**122**
+30 mins.	48	49	5	102	4	21	**54**	**79**	21	29	2	52	**8**	36	41	85
+45 mins.	**57**	57	2	**116**	4	15	49	68	23	26	3	52	8	43	44	95
Total Volume	183	222	15	420	14	91	178	283	102	131	12	245	22	172	210	404
% App. Total	43.6	52.9	3.6		4.9	32.2	62.9		41.6	53.5	4.9		5.4	42.6	52	
PHF	.803	.854	.536	.905	.700	.711	.824	.896	.797	.840	.500	.795	.688	.878	.761	.828

Counts Unlimited, Inc.
PO Box 1178
Corona, CA 92878
(951) 268-6268

County of Imperial
N/S: Pitzer Road
E/W: E Main Street/E Heber Road
Weather: Clear

File Name : 19_CIM_Pit_E Heb AM
Site Code : 05724265
Start Date : 3/21/2024
Page No : 1

Groups Printed- Total Volume

	Pitzer Road Southbound				E Heber Road Westbound				Pitzer Road Northbound				E Main Street Eastbound				
Start Time	Left	Thru	Right	App. Total	Left	Thru	Right	App. Total	Left	Thru	Right	App. Total	Left	Thru	Right	App. Total	Int. Total
07:00 AM	0	0	0	0	0	27	0	27	2	0	1	3	0	38	1	39	69
07:15 AM	1	0	0	1	0	45	1	46	5	0	0	5	0	40	1	41	93
07:30 AM	0	0	0	0	0	58	1	59	9	0	4	13	0	63	5	68	140
07:45 AM	0	0	0	0	0	73	0	73	5	0	1	6	0	57	0	57	136
Total	1	0	0	1	0	203	2	205	21	0	6	27	0	198	7	205	438
08:00 AM	1	0	0	1	2	58	0	60	5	0	0	5	0	59	2	61	127
08:15 AM	0	0	0	0	2	38	0	40	4	0	2	6	0	48	5	53	99
08:30 AM	0	0	0	0	1	38	0	39	5	0	3	8	0	40	1	41	88
08:45 AM	0	0	0	0	0	34	0	34	3	0	3	6	0	51	3	54	94
Total	1	0	0	1	5	168	0	173	17	0	8	25	0	198	11	209	408
Grand Total	2	0	0	2	5	371	2	378	38	0	14	52	0	396	18	414	846
Apprch %	100	0	0		1.3	98.1	0.5		73.1	0	26.9		0	95.7	4.3		
Total %	0.2	0	0	0.2	0.6	43.9	0.2	44.7	4.5	0	1.7	6.1	0	46.8	2.1	48.9	

	Pitzer Road Southbound				E Heber Road Westbound				Pitzer Road Northbound				E Main Street Eastbound				
Start Time	Left	Thru	Right	App. Total	Left	Thru	Right	App. Total	Left	Thru	Right	App. Total	Left	Thru	Right	App. Total	Int. Total
Peak Hour Analysis From 07:00 AM to 08:45 AM - Peak 1 of 1																	
Peak Hour for Entire Intersection Begins at 07:30 AM																	
07:30 AM	0	0	0	0	0	58	**1**	59	**9**	0	**4**	**13**	0	**63**	**5**	**68**	**140**
07:45 AM	0	0	0	0	0	**73**	0	**73**	5	0	1	6	0	57	0	57	136
08:00 AM	**1**	0	0	**1**	**2**	58	0	60	5	0	0	5	0	59	2	61	127
08:15 AM	0	0	0	0	2	38	0	40	4	0	2	6	0	48	5	53	99
Total Volume	1	0	0	1	4	227	1	232	23	0	7	30	0	227	12	239	502
% App. Total	100	0	0		1.7	97.8	0.4		76.7	0	23.3		0	95	5		
PHF	.250	.000	.000	.250	.500	.777	.250	.795	.639	.000	.438	.577	.000	.901	.600	.879	.896

Counts Unlimited, Inc.
PO Box 1178
Corona, CA 92878
(951) 268-6268

County of Imperial
N/S: Pitzer Road
E/W: E Main Street/E Heber Road
Weather: Clear

File Name : 19_CIM_Pit_E Heb AM
Site Code : 05724265
Start Date : 3/21/2024
Page No : 2

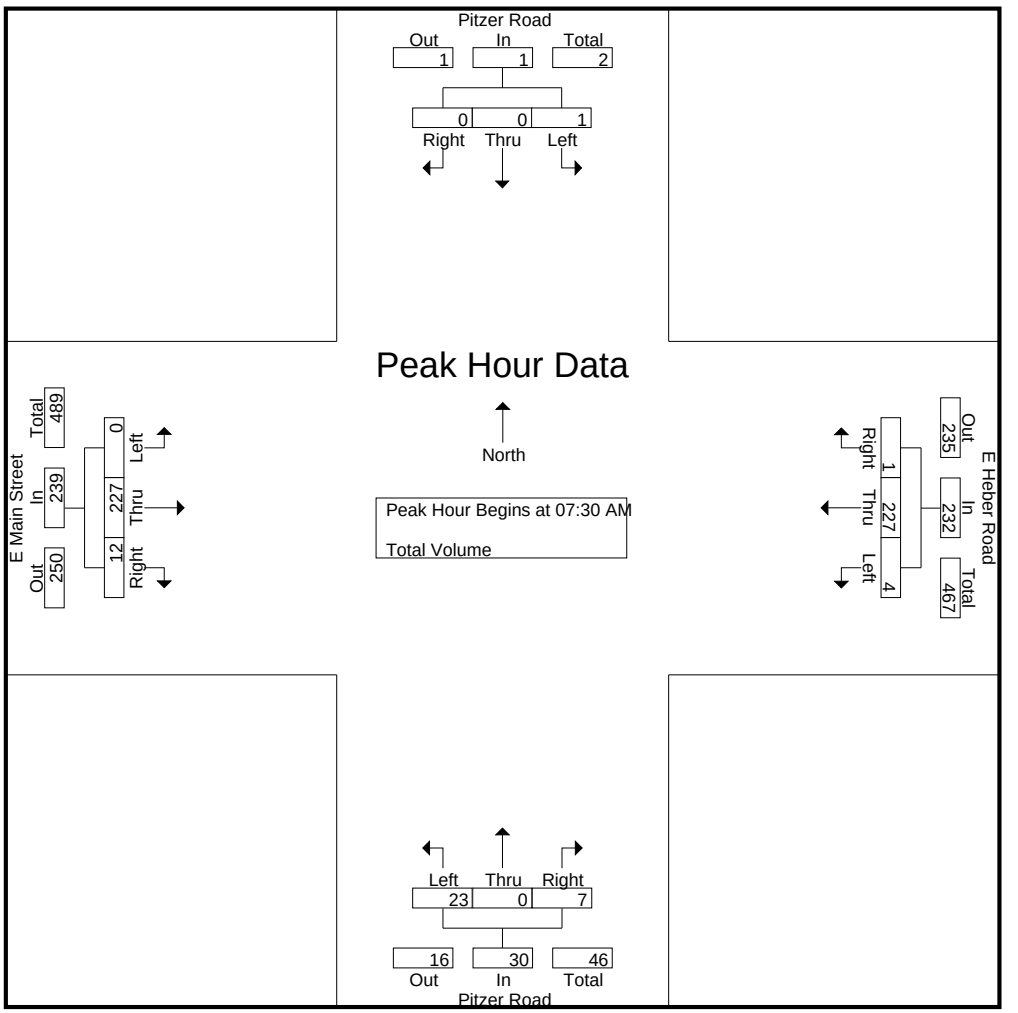

Peak Hour Analysis From 07:00 AM to 08:45 AM - Peak 1 of 1
Peak Hour for Each Approach Begins at:

	07:15 AM				07:15 AM				07:30 AM				07:30 AM			
+0 mins.	**1**	0	0	**1**	0	45	**1**	46	**9**	0	**4**	**13**	0	**63**	**5**	**68**
+15 mins.	0	0	0	0	0	58	1	59	5	0	1	6	0	57	0	57
+30 mins.	0	0	0	0	0	**73**	0	**73**	5	0	0	5	0	59	2	61
+45 mins.	1	0	0	1	**2**	58	0	60	4	0	2	6	0	48	5	53
Total Volume	2	0	0	2	2	234	2	238	23	0	7	30	0	227	12	239
% App. Total	100	0	0		0.8	98.3	0.8		76.7	0	23.3		0	95	5	
PHF	.500	.000	.000	.500	.250	.801	.500	.815	.639	.000	.438	.577	.000	.901	.600	.879

Counts Unlimited, Inc.
PO Box 1178
Corona, CA 92878
(951) 268-6268

County of Imperial
N/S: Pitzer Road
E/W: E Main Street/E Heber Road
Weather: Clear

File Name : 19_CIM_Pit_E Heb PM
Site Code : 05724265
Start Date : 3/21/2024
Page No : 1

Groups Printed- Total Volume

	Pitzer Road Southbound				E Heber Road Westbound				Pitzer Road Northbound				E Main Street Eastbound				
Start Time	Left	Thru	Right	App. Total	Left	Thru	Right	App. Total	Left	Thru	Right	App. Total	Left	Thru	Right	App. Total	Int. Total
04:00 PM	1	0	0	1	1	68	0	69	3	0	0	3	0	64	2	66	139
04:15 PM	1	0	0	1	3	62	0	65	3	0	1	4	0	68	4	72	142
04:30 PM	0	0	0	0	4	42	0	46	4	0	2	6	0	56	5	61	113
04:45 PM	0	1	0	1	0	47	0	47	3	0	1	4	0	57	7	64	116
Total	2	1	0	3	8	219	0	227	13	0	4	17	0	245	18	263	510
05:00 PM	0	0	0	0	1	60	0	61	0	0	0	0	1	72	3	76	137
05:15 PM	0	0	0	0	3	64	1	68	2	0	0	2	0	85	5	90	160
05:30 PM	0	0	0	0	1	58	0	59	3	0	0	3	0	65	5	70	132
05:45 PM	0	0	0	0	0	49	0	49	0	0	1	1	0	70	1	71	121
Total	0	0	0	0	5	231	1	237	5	0	1	6	1	292	14	307	550
Grand Total	2	1	0	3	13	450	1	464	18	0	5	23	1	537	32	570	1060
Apprch %	66.7	33.3	0		2.8	97	0.2		78.3	0	21.7		0.2	94.2	5.6		
Total %	0.2	0.1	0	0.3	1.2	42.5	0.1	43.8	1.7	0	0.5	2.2	0.1	50.7	3	53.8	

	Pitzer Road Southbound				E Heber Road Westbound				Pitzer Road Northbound				E Main Street Eastbound				
Start Time	Left	Thru	Right	App. Total	Left	Thru	Right	App. Total	Left	Thru	Right	App. Total	Left	Thru	Right	App. Total	Int. Total
Peak Hour Analysis From 04:00 PM to 05:45 PM - Peak 1 of 1																	
Peak Hour for Entire Intersection Begins at 05:00 PM																	
05:00 PM	0	0	0	0	1	60	0	61	0	0	0	0	**1**	72	3	76	137
05:15 PM	0	0	0	0	**3**	**64**	**1**	**68**	2	0	0	2	0	**85**	**5**	**90**	**160**
05:30 PM	0	0	0	0	1	58	0	59	**3**	0	0	**3**	0	65	5	70	132
05:45 PM	0	0	0	0	0	49	0	49	0	0	**1**	1	0	70	1	71	121
Total Volume	0	0	0	0	5	231	1	237	5	0	1	6	1	292	14	307	550
% App. Total	0	0	0		2.1	97.5	0.4		83.3	0	16.7		0.3	95.1	4.6		
PHF	.000	.000	.000	.000	.417	.902	.250	.871	.417	.000	.250	.500	.250	.859	.700	.853	.859

Counts Unlimited, Inc.
PO Box 1178
Corona, CA 92878
(951) 268-6268

County of Imperial
N/S: Pitzer Road
E/W: E Main Street/E Heber Road
Weather: Clear

File Name : 19_CIM_Pit_E Heb PM
Site Code : 05724265
Start Date : 3/21/2024
Page No : 2

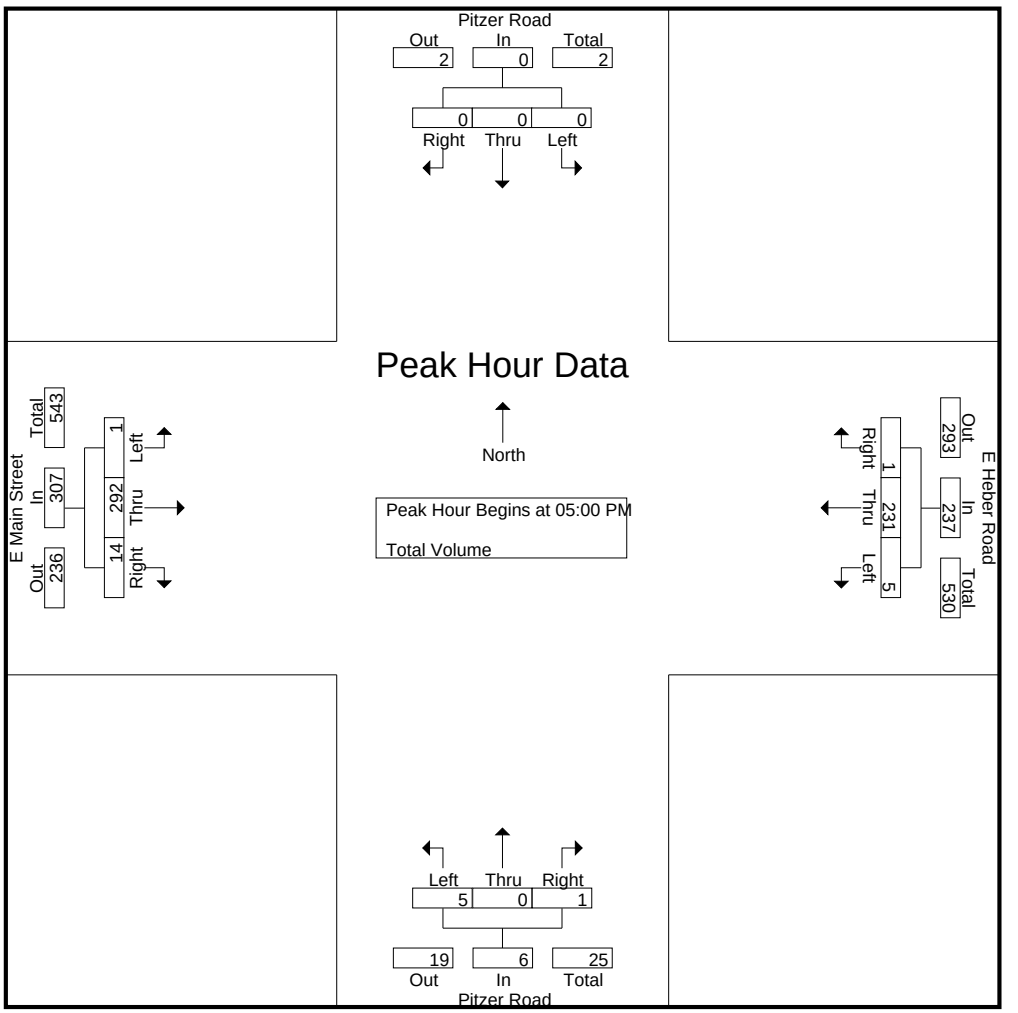

Peak Hour Analysis From 04:00 PM to 05:45 PM - Peak 1 of 1
Peak Hour for Each Approach Begins at:

	04:00 PM				05:00 PM				04:00 PM				05:00 PM			
+0 mins.	**1**	0	0	**1**	1	60	0	61	3	0	0	3	**1**	72	3	76
+15 mins.	1	0	0	1	**3**	**64**	**1**	**68**	3	0	1	4	0	**85**	**5**	**90**
+30 mins.	0	0	0	0	1	58	0	59	**4**	0	**2**	**6**	0	65	5	70
+45 mins.	0	**1**	0	1	0	49	0	49	3	0	1	4	0	70	1	71
Total Volume	2	1	0	3	5	231	1	237	13	0	4	17	1	292	14	307
% App. Total	66.7	33.3	0		2.1	97.5	0.4		76.5	0	23.5		0.3	95.1	4.6	
PHF	.500	.250	.000	.750	.417	.902	.250	.871	.813	.000	.500	.708	.250	.859	.700	.853

Counts Unlimited, Inc.
PO Box 1178
Corona, CA 92878
(951) 268-6268

City of El Centro
N/S: Imperial Avenue
E/W: Ross Avenue
Weather: Clear

File Name : 01_ECO_Imp_Ross AM
Site Code : 05724905
Start Date : 10/23/2024
Page No : 1

Groups Printed- Total Volume

	Imperial Avenue Southbound				Ross Avenue Westbound				Imperial Avenue Northbound				Ross Avenue Eastbound				
Start Time	Left	Thru	Right	App. Total	Left	Thru	Right	App. Total	Left	Thru	Right	App. Total	Left	Thru	Right	App. Total	Int. Total
07:00 AM	5	70	9	84	9	27	10	46	12	83	4	99	4	19	13	36	265
07:15 AM	9	83	7	99	14	42	10	66	17	159	4	180	11	27	26	64	409
07:30 AM	18	139	30	187	30	54	22	106	38	199	20	257	36	51	46	133	683
07:45 AM	38	173	46	257	32	95	18	145	43	222	36	301	32	72	75	179	882
Total	70	465	92	627	85	218	60	363	110	663	64	837	83	169	160	412	2239
08:00 AM	22	127	11	160	12	33	8	53	26	157	20	203	23	66	41	130	546
08:15 AM	20	95	9	124	11	31	6	48	20	102	17	139	6	51	29	86	397
08:30 AM	21	97	6	124	13	20	10	43	17	123	20	160	9	27	26	62	389
08:45 AM	7	105	8	120	16	34	17	67	10	115	16	141	9	36	28	73	401
Total	70	424	34	528	52	118	41	211	73	497	73	643	47	180	124	351	1733
Grand Total	140	889	126	1155	137	336	101	574	183	1160	137	1480	130	349	284	763	3972
Apprch %	12.1	77	10.9		23.9	58.5	17.6		12.4	78.4	9.3		17	45.7	37.2		
Total %	3.5	22.4	3.2	29.1	3.4	8.5	2.5	14.5	4.6	29.2	3.4	37.3	3.3	8.8	7.2	19.2	

	Imperial Avenue Southbound				Ross Avenue Westbound				Imperial Avenue Northbound				Ross Avenue Eastbound				
Start Time	Left	Thru	Right	App. Total	Left	Thru	Right	App. Total	Left	Thru	Right	App. Total	Left	Thru	Right	App. Total	Int. Total
Peak Hour Analysis From 07:00 AM to 08:45 AM - Peak 1 of 1																	
Peak Hour for Entire Intersection Begins at 07:15 AM																	
07:15 AM	9	83	7	99	14	42	10	66	17	159	4	180	11	27	26	64	409
07:30 AM	18	139	30	187	30	54	**22**	106	38	199	20	257	**36**	51	46	133	683
07:45 AM	**38**	**173**	**46**	**257**	**32**	**95**	18	**145**	**43**	**222**	**36**	**301**	32	**72**	**75**	**179**	**882**
08:00 AM	22	127	11	160	12	33	8	53	26	157	20	203	23	66	41	130	546
Total Volume	87	522	94	703	88	224	58	370	124	737	80	941	102	216	188	506	2520
% App. Total	12.4	74.3	13.4		23.8	60.5	15.7		13.2	78.3	8.5		20.2	42.7	37.2		
PHF	.572	.754	.511	.684	.688	.589	.659	.638	.721	.830	.556	.782	.708	.750	.627	.707	.714

Counts Unlimited, Inc.
PO Box 1178
Corona, CA 92878
(951) 268-6268

City of El Centro
N/S: Imperial Avenue
E/W: Ross Avenue
Weather: Clear

File Name : 01_ECO_Imp_Ross AM
Site Code : 05724905
Start Date : 10/23/2024
Page No : 2

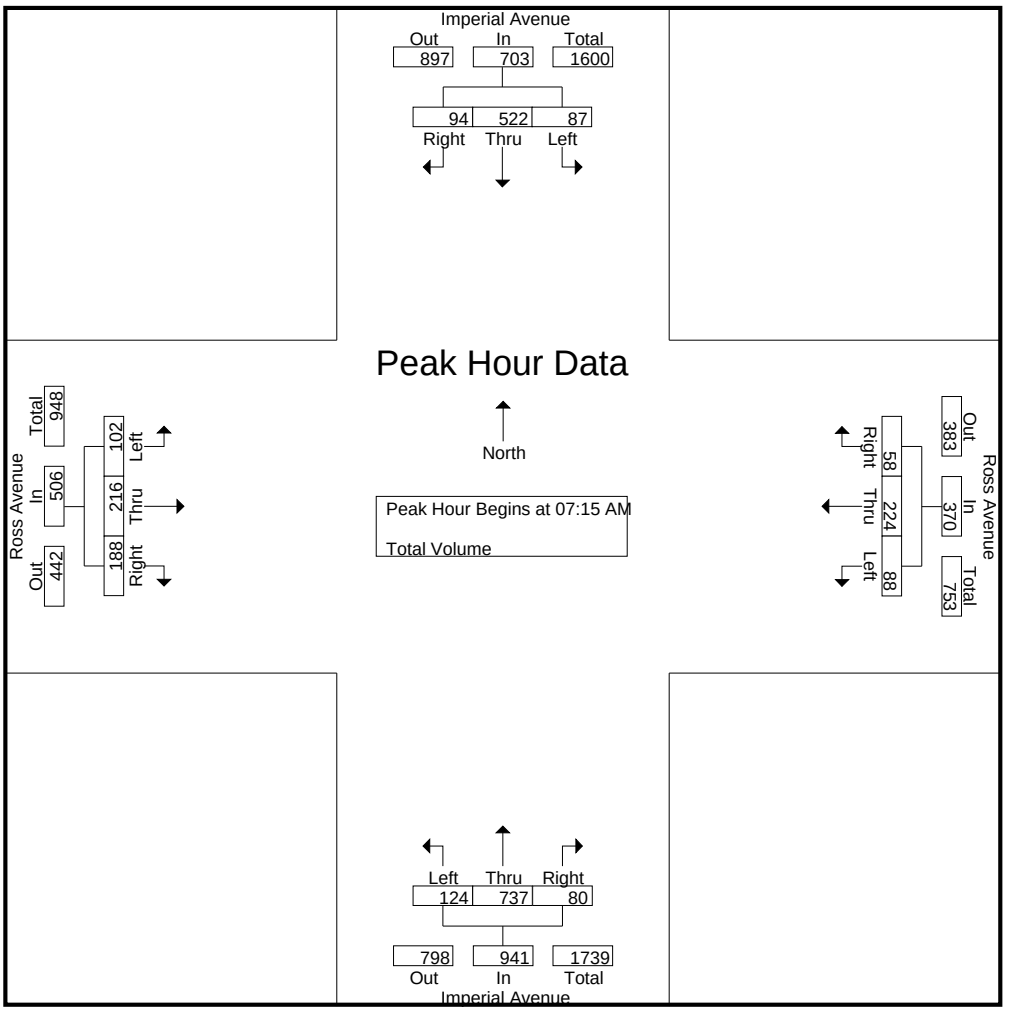

Peak Hour Analysis From 07:00 AM to 08:45 AM - Peak 1 of 1
Peak Hour for Each Approach Begins at:

	07:30 AM				07:15 AM				07:15 AM				07:30 AM			
+0 mins.	18	139	30	187	14	42	10	66	17	159	4	180	**36**	51	46	133
+15 mins.	**38**	**173**	**46**	**257**	30	54	**22**	106	38	199	20	257	32	**72**	**75**	**179**
+30 mins.	22	127	11	160	**32**	**95**	18	**145**	**43**	**222**	**36**	**301**	23	66	41	130
+45 mins.	20	95	9	124	12	33	8	53	26	157	20	203	6	51	29	86
Total Volume	98	534	96	728	88	224	58	370	124	737	80	941	97	240	191	528
% App. Total	13.5	73.4	13.2		23.8	60.5	15.7		13.2	78.3	8.5		18.4	45.5	36.2	
PHF	.645	.772	.522	.708	.688	.589	.659	.638	.721	.830	.556	.782	.674	.833	.637	.737

Counts Unlimited, Inc.
PO Box 1178
Corona, CA 92878
(951) 268-6268

City of El Centro
N/S: Imperial Avenue
E/W: Ross Avenue
Weather: Clear

File Name : 01_ECO_Imp_Ross PM
Site Code : 05724905
Start Date : 10/23/2024
Page No : 1

Groups Printed- Total Volume

	Imperial Avenue Southbound				Ross Avenue Westbound				Imperial Avenue Northbound				Ross Avenue Eastbound				
Start Time	Left	Thru	Right	App. Total	Left	Thru	Right	App. Total	Left	Thru	Right	App. Total	Left	Thru	Right	App. Total	Int. Total
04:00 PM	21	151	13	185	17	39	25	81	17	165	10	192	11	33	19	63	521
04:15 PM	22	163	13	198	16	30	15	61	17	168	17	202	11	29	26	66	527
04:30 PM	21	204	11	236	20	28	22	70	32	160	16	208	20	26	18	64	578
04:45 PM	18	179	8	205	18	33	22	73	30	146	18	194	16	27	30	73	545
Total	82	697	45	824	71	130	84	285	96	639	61	796	58	115	93	266	2171
05:00 PM	14	211	14	239	13	50	32	95	37	147	11	195	20	34	22	76	605
05:15 PM	16	163	13	192	17	43	18	78	20	140	9	169	16	38	30	84	523
05:30 PM	20	213	11	244	16	28	15	59	22	162	11	195	9	25	22	56	554
05:45 PM	19	179	9	207	11	21	21	53	24	152	14	190	12	40	13	65	515
Total	69	766	47	882	57	142	86	285	103	601	45	749	57	137	87	281	2197
Grand Total	151	1463	92	1706	128	272	170	570	199	1240	106	1545	115	252	180	547	4368
Apprch %	8.9	85.8	5.4		22.5	47.7	29.8		12.9	80.3	6.9		21	46.1	32.9		
Total %	3.5	33.5	2.1	39.1	2.9	6.2	3.9	13	4.6	28.4	2.4	35.4	2.6	5.8	4.1	12.5	

	Imperial Avenue Southbound				Ross Avenue Westbound				Imperial Avenue Northbound				Ross Avenue Eastbound				
Start Time	Left	Thru	Right	App. Total	Left	Thru	Right	App. Total	Left	Thru	Right	App. Total	Left	Thru	Right	App. Total	Int. Total
Peak Hour Analysis From 04:00 PM to 05:45 PM - Peak 1 of 1																	
Peak Hour for Entire Intersection Begins at 04:15 PM																	
04:15 PM	**22**	163	13	198	16	30	15	61	17	**168**	17	202	11	29	26	66	527
04:30 PM	21	204	11	236	**20**	28	22	70	32	160	16	**208**	**20**	26	18	64	578
04:45 PM	18	179	8	205	18	33	22	73	30	146	**18**	194	16	27	**30**	73	545
05:00 PM	14	**211**	**14**	**239**	13	**50**	**32**	**95**	**37**	147	11	195	20	**34**	22	**76**	**605**
Total Volume	75	757	46	878	67	141	91	299	116	621	62	799	67	116	96	279	2255
% App. Total	8.5	86.2	5.2		22.4	47.2	30.4		14.5	77.7	7.8		24	41.6	34.4		
PHF	.852	.897	.821	.918	.838	.705	.711	.787	.784	.924	.861	.960	.838	.853	.800	.918	.932

Counts Unlimited, Inc.
PO Box 1178
Corona, CA 92878
(951) 268-6268

City of El Centro
N/S: Imperial Avenue
E/W: Ross Avenue
Weather: Clear

File Name : 01_ECO_Imp_Ross PM
Site Code : 05724905
Start Date : 10/23/2024
Page No : 2

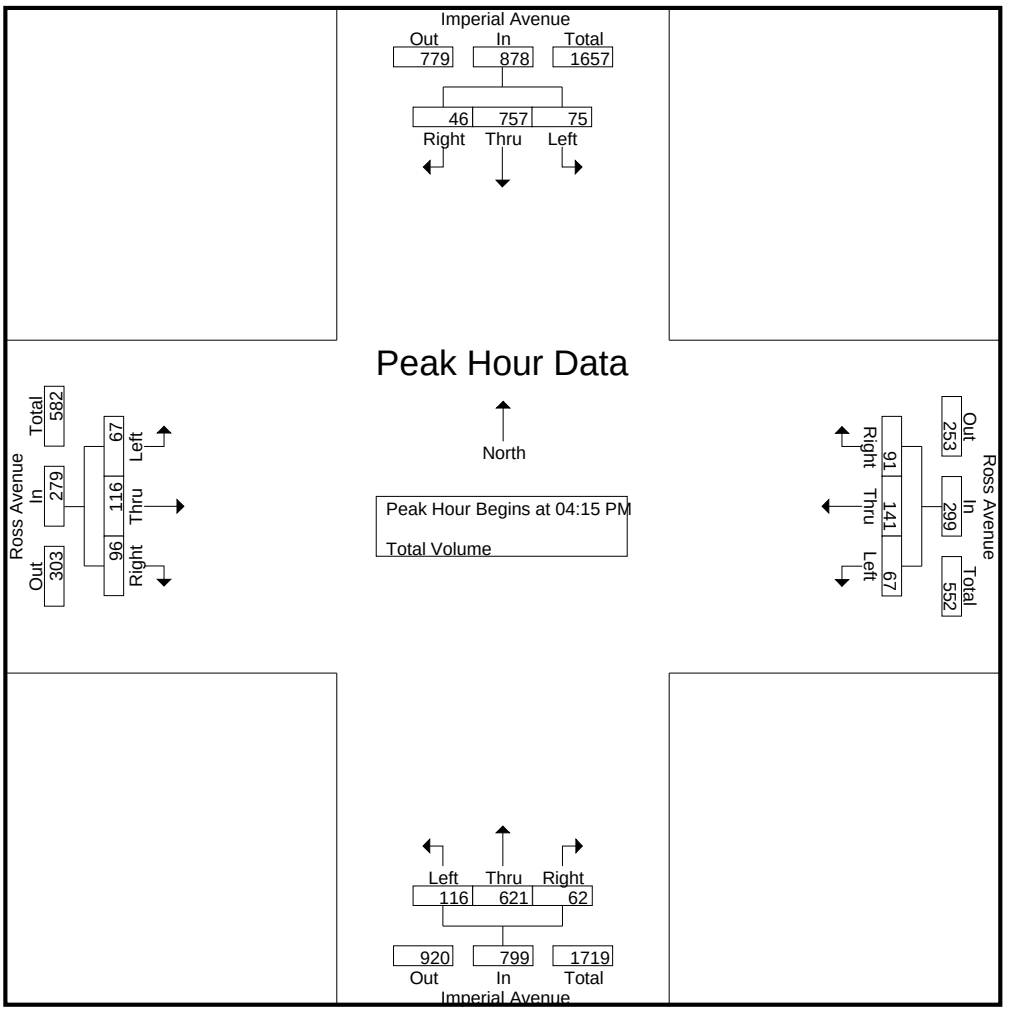

Peak Hour Analysis From 04:00 PM to 05:45 PM - Peak 1 of 1
Peak Hour for Each Approach Begins at:

	05:00 PM				04:30 PM				04:15 PM				04:30 PM			
+0 mins.	14	211	**14**	239	**20**	28	22	70	17	**168**	17	202	**20**	26	18	64
+15 mins.	16	163	13	192	18	33	22	73	32	160	16	**208**	16	27	**30**	73
+30 mins.	**20**	**213**	11	**244**	13	**50**	**32**	**95**	30	146	**18**	194	20	34	22	76
+45 mins.	19	179	9	207	17	43	18	78	**37**	147	11	195	16	**38**	30	**84**
Total Volume	69	766	47	882	68	154	94	316	116	621	62	799	72	125	100	297
% App. Total	7.8	86.8	5.3		21.5	48.7	29.7		14.5	77.7	7.8		24.2	42.1	33.7	
PHF	.863	.899	.839	.904	.850	.770	.734	.832	.784	.924	.861	.960	.900	.822	.833	.884

Counts Unlimited, Inc.
PO Box 1178
Corona, CA 92878
(951) 268-6268

City of El Centro
N/S: S 8th Street
E/W: Ross Avenue
Weather: Clear

File Name : 02_ECO_S 8th_Ross AM
Site Code : 05724905
Start Date : 10/23/2024
Page No : 1

Groups Printed- Total Volume

	S 8th Street Southbound				Ross Avenue Westbound				S 8th Street Northbound				Ross Avenue Eastbound				
Start Time	Left	Thru	Right	App. Total	Left	Thru	Right	App. Total	Left	Thru	Right	App. Total	Left	Thru	Right	App. Total	Int. Total
07:00 AM	7	44	12	63	4	29	4	37	8	64	7	79	10	23	6	39	218
07:15 AM	13	49	19	81	5	36	5	46	16	131	6	153	8	26	11	45	325
07:30 AM	25	95	22	142	3	79	6	88	45	187	9	241	18	51	16	85	556
07:45 AM	21	146	26	193	7	88	5	100	49	155	5	209	23	93	27	143	645
Total	66	334	79	479	19	232	20	271	118	537	27	682	59	193	60	312	1744
08:00 AM	5	81	17	103	4	40	1	45	16	96	5	117	25	66	24	115	380
08:15 AM	1	64	11	76	4	32	6	42	11	90	2	103	4	37	20	61	282
08:30 AM	6	51	8	65	3	26	4	33	16	67	2	85	6	45	20	71	254
08:45 AM	4	68	14	86	2	41	8	51	26	80	4	110	12	49	15	76	323
Total	16	264	50	330	13	139	19	171	69	333	13	415	47	197	79	323	1239
Grand Total	82	598	129	809	32	371	39	442	187	870	40	1097	106	390	139	635	2983
Apprch %	10.1	73.9	15.9		7.2	83.9	8.8		17	79.3	3.6		16.7	61.4	21.9		
Total %	2.7	20	4.3	27.1	1.1	12.4	1.3	14.8	6.3	29.2	1.3	36.8	3.6	13.1	4.7	21.3	

	S 8th Street Southbound				Ross Avenue Westbound				S 8th Street Northbound				Ross Avenue Eastbound				
Start Time	Left	Thru	Right	App. Total	Left	Thru	Right	App. Total	Left	Thru	Right	App. Total	Left	Thru	Right	App. Total	Int. Total
Peak Hour Analysis From 07:00 AM to 08:45 AM - Peak 1 of 1																	
Peak Hour for Entire Intersection Begins at 07:15 AM																	
07:15 AM	13	49	19	81	5	36	5	46	16	131	6	153	8	26	11	45	325
07:30 AM	**25**	95	22	142	3	79	**6**	88	45	**187**	**9**	**241**	18	51	16	85	556
07:45 AM	21	**146**	**26**	**193**	**7**	**88**	5	**100**	**49**	155	5	209	23	**93**	**27**	**143**	**645**
08:00 AM	5	81	17	103	4	40	1	45	16	96	5	117	**25**	66	24	115	380
Total Volume	64	371	84	519	19	243	17	279	126	569	25	720	74	236	78	388	1906
% App. Total	12.3	71.5	16.2		6.8	87.1	6.1		17.5	79	3.5		19.1	60.8	20.1		
PHF	.640	.635	.808	.672	.679	.690	.708	.698	.643	.761	.694	.747	.740	.634	.722	.678	.739

Counts Unlimited, Inc.
PO Box 1178
Corona, CA 92878
(951) 268-6268

City of El Centro
N/S: S 8th Street
E/W: Ross Avenue
Weather: Clear

File Name : 02_ECO_S 8th_Ross AM
Site Code : 05724905
Start Date : 10/23/2024
Page No : 2

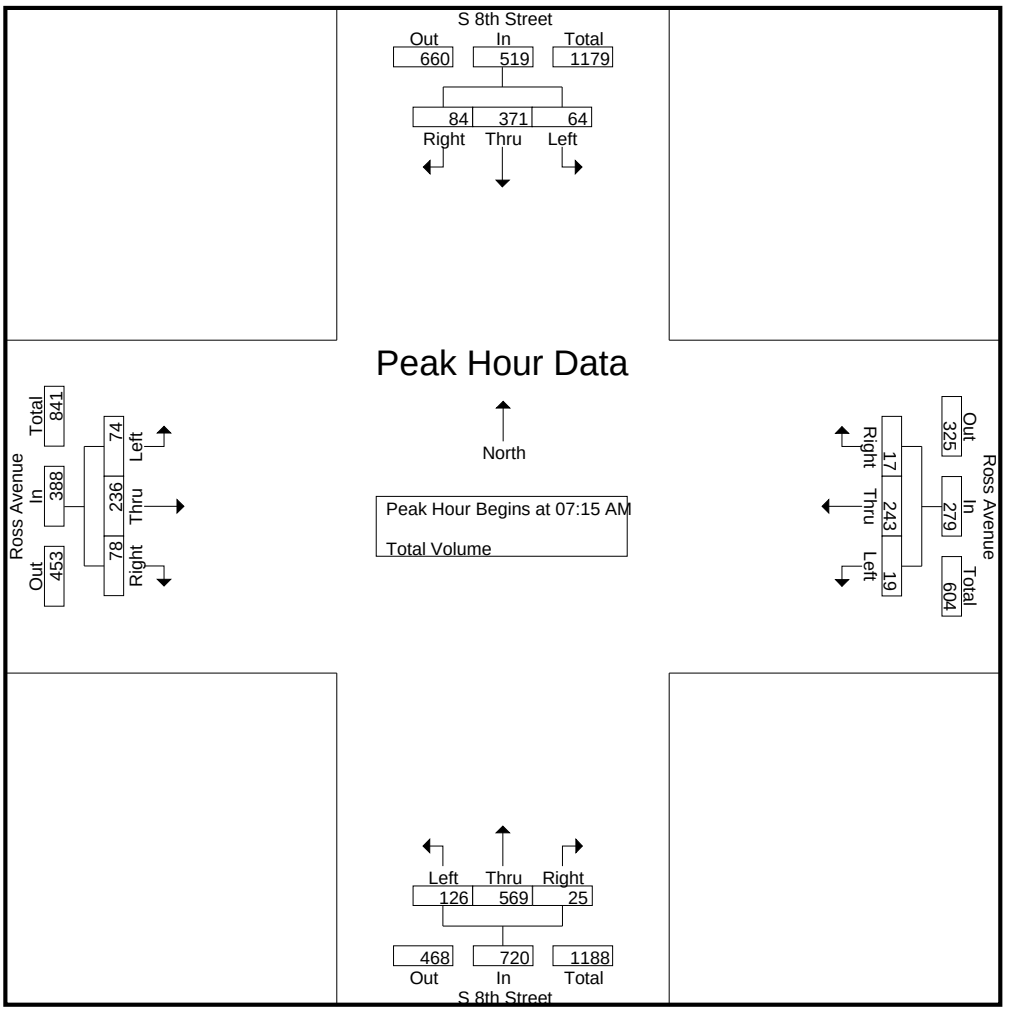

Peak Hour Analysis From 07:00 AM to 08:45 AM - Peak 1 of 1
Peak Hour for Each Approach Begins at:

	07:15 AM				07:15 AM				07:15 AM				07:30 AM			
+0 mins.	13	49	19	81	5	36	5	46	16	131	6	153	18	51	16	85
+15 mins.	**25**	95	22	142	3	79	**6**	88	45	**187**	**9**	**241**	23	**93**	**27**	**143**
+30 mins.	21	**146**	**26**	**193**	**7**	**88**	5	**100**	**49**	155	5	209	**25**	66	24	115
+45 mins.	5	81	17	103	4	40	1	45	16	96	5	117	4	37	20	61
Total Volume	64	371	84	519	19	243	17	279	126	569	25	720	70	247	87	404
% App. Total	12.3	71.5	16.2		6.8	87.1	6.1		17.5	79	3.5		17.3	61.1	21.5	
PHF	.640	.635	.808	.672	.679	.690	.708	.698	.643	.761	.694	.747	.700	.664	.806	.706

Counts Unlimited, Inc.
PO Box 1178
Corona, CA 92878
(951) 268-6268

City of El Centro
N/S: S 8th Street
E/W: Ross Avenue
Weather: Clear

File Name : 02_ECO_S 8th_Ross PM
Site Code : 05724905
Start Date : 10/23/2024
Page No : 1

Groups Printed- Total Volume

	S 8th Street Southbound				Ross Avenue Westbound				S 8th Street Northbound				Ross Avenue Eastbound				
Start Time	Left	Thru	Right	App. Total	Left	Thru	Right	App. Total	Left	Thru	Right	App. Total	Left	Thru	Right	App. Total	Int. Total
04:00 PM	10	127	11	148	5	43	7	55	21	65	5	91	12	36	22	70	364
04:15 PM	5	110	15	130	5	25	3	33	18	93	4	115	10	38	23	71	349
04:30 PM	4	79	11	94	3	31	5	39	13	89	8	110	10	34	28	72	315
04:45 PM	16	119	13	148	4	35	5	44	25	114	3	142	10	34	17	61	395
Total	35	435	50	520	17	134	20	171	77	361	20	458	42	142	90	274	1423
05:00 PM	14	194	9	217	7	53	7	67	31	93	7	131	15	49	22	86	501
05:15 PM	17	118	15	150	3	35	8	46	11	104	10	125	7	44	24	75	396
05:30 PM	6	124	12	142	8	30	3	41	15	72	5	92	4	42	13	59	334
05:45 PM	10	98	10	118	3	24	5	32	19	101	4	124	12	55	18	85	359
Total	47	534	46	627	21	142	23	186	76	370	26	472	38	190	77	305	1590
Grand Total	82	969	96	1147	38	276	43	357	153	731	46	930	80	332	167	579	3013
Apprch %	7.1	84.5	8.4		10.6	77.3	12		16.5	78.6	4.9		13.8	57.3	28.8		
Total %	2.7	32.2	3.2	38.1	1.3	9.2	1.4	11.8	5.1	24.3	1.5	30.9	2.7	11	5.5	19.2	

	S 8th Street Southbound				Ross Avenue Westbound				S 8th Street Northbound				Ross Avenue Eastbound				
Start Time	Left	Thru	Right	App. Total	Left	Thru	Right	App. Total	Left	Thru	Right	App. Total	Left	Thru	Right	App. Total	Int. Total
Peak Hour Analysis From 04:00 PM to 05:45 PM - Peak 1 of 1																	
Peak Hour for Entire Intersection Begins at 04:45 PM																	
04:45 PM	16	119	13	148	4	35	5	44	25	**114**	3	**142**	10	34	17	61	395
05:00 PM	14	**194**	9	**217**	7	**53**	7	**67**	**31**	93	7	131	**15**	**49**	22	**86**	**501**
05:15 PM	**17**	118	**15**	150	3	35	**8**	46	11	104	**10**	125	7	44	**24**	75	396
05:30 PM	6	124	12	142	**8**	30	3	41	15	72	5	92	4	42	13	59	334
Total Volume	53	555	49	657	22	153	23	198	82	383	25	490	36	169	76	281	1626
% App. Total	8.1	84.5	7.5		11.1	77.3	11.6		16.7	78.2	5.1		12.8	60.1	27		
PHF	.779	.715	.817	.757	.688	.722	.719	.739	.661	.840	.625	.863	.600	.862	.792	.817	.811

Counts Unlimited, Inc.
PO Box 1178
Corona, CA 92878
(951) 268-6268

City of El Centro
N/S: S 8th Street
E/W: Ross Avenue
Weather: Clear

File Name : 02_ECO_S 8th_Ross PM
Site Code : 05724905
Start Date : 10/23/2024
Page No : 2

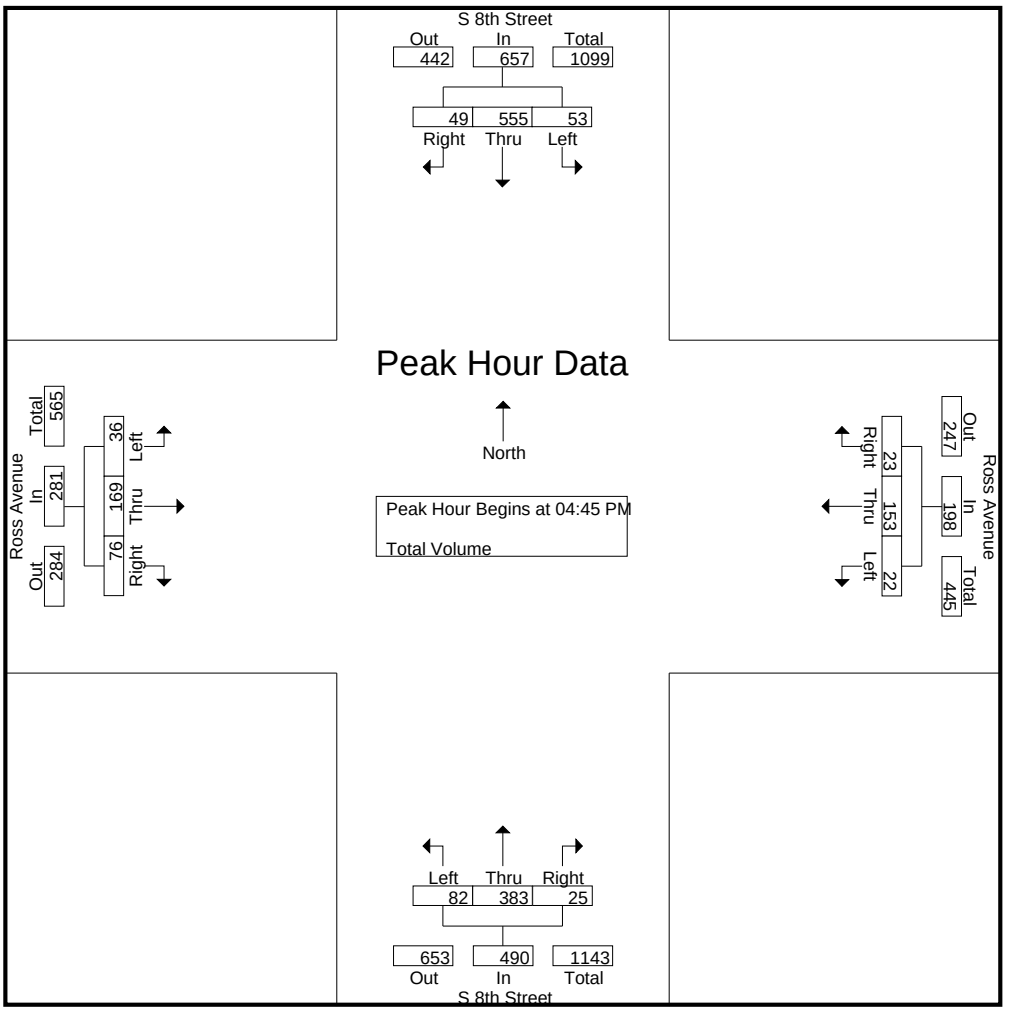

Peak Hour Analysis From 04:00 PM to 05:45 PM - Peak 1 of 1
Peak Hour for Each Approach Begins at:

	04:45 PM				04:45 PM				04:30 PM				05:00 PM			
+0 mins.	16	119	13	148	4	35	5	44	13	89	8	110	**15**	49	22	**86**
+15 mins.	14	**194**	9	**217**	7	**53**	7	**67**	25	**114**	3	**142**	7	44	**24**	75
+30 mins.	**17**	118	**15**	150	3	35	**8**	46	**31**	93	7	131	4	42	13	59
+45 mins.	6	124	12	142	**8**	30	3	41	11	104	**10**	125	12	**55**	18	85
Total Volume	53	555	49	657	22	153	23	198	80	400	28	508	38	190	77	305
% App. Total	8.1	84.5	7.5		11.1	77.3	11.6		15.7	78.7	5.5		12.5	62.3	25.2	
PHF	.779	.715	.817	.757	.688	.722	.719	.739	.645	.877	.700	.894	.633	.864	.802	.887

Counts Unlimited, Inc.
PO Box 1178
Corona, CA 92878
(951) 268-6268

City of El Centro
N/S: S 8th Street
E/W: Aurora Drive
Weather: Clear

File Name : 03_ECO_S 8th_Aur AM
Site Code : 05724905
Start Date : 10/23/2024
Page No : 1

Groups Printed- Total Volume

	S 8th Street Southbound				Aurora Drive Westbound				S 8th Street Northbound				Aurora Drive Eastbound				
Start Time	Left	Thru	Right	App. Total	Left	Thru	Right	App. Total	Left	Thru	Right	App. Total	Left	Thru	Right	App. Total	Int. Total
07:00 AM	10	33	6	49	6	9	6	21	13	60	6	79	7	11	9	27	176
07:15 AM	7	50	7	64	6	21	19	46	20	124	9	153	12	21	12	45	308
07:30 AM	21	83	5	109	15	38	28	81	31	182	17	230	13	27	20	60	480
07:45 AM	32	130	7	169	10	29	28	67	38	151	20	209	14	54	28	96	541
Total	70	296	25	391	37	97	81	215	102	517	52	671	46	113	69	228	1505
08:00 AM	18	79	10	107	12	25	9	46	16	94	18	128	13	48	20	81	362
08:15 AM	10	70	11	91	5	23	9	37	13	90	6	109	3	27	13	43	280
08:30 AM	9	56	7	72	4	26	6	36	12	69	2	83	1	15	10	26	217
08:45 AM	10	62	7	79	10	21	10	41	10	79	6	95	4	16	15	35	250
Total	47	267	35	349	31	95	34	160	51	332	32	415	21	106	58	185	1109
Grand Total	117	563	60	740	68	192	115	375	153	849	84	1086	67	219	127	413	2614
Apprch %	15.8	76.1	8.1		18.1	51.2	30.7		14.1	78.2	7.7		16.2	53	30.8		
Total %	4.5	21.5	2.3	28.3	2.6	7.3	4.4	14.3	5.9	32.5	3.2	41.5	2.6	8.4	4.9	15.8	

	S 8th Street Southbound				Aurora Drive Westbound				S 8th Street Northbound				Aurora Drive Eastbound				
Start Time	Left	Thru	Right	App. Total	Left	Thru	Right	App. Total	Left	Thru	Right	App. Total	Left	Thru	Right	App. Total	Int. Total
Peak Hour Analysis From 07:00 AM to 08:45 AM - Peak 1 of 1																	
Peak Hour for Entire Intersection Begins at 07:15 AM																	
07:15 AM	7	50	7	64	6	21	19	46	20	124	9	153	12	21	12	45	308
07:30 AM	21	83	5	109	**15**	**38**	**28**	**81**	31	**182**	17	**230**	13	27	20	60	480
07:45 AM	**32**	**130**	7	**169**	10	29	28	67	**38**	151	**20**	209	**14**	**54**	**28**	**96**	**541**
08:00 AM	18	79	**10**	107	12	25	9	46	16	94	18	128	13	48	20	81	362
Total Volume	78	342	29	449	43	113	84	240	105	551	64	720	52	150	80	282	1691
% App. Total	17.4	76.2	6.5		17.9	47.1	35		14.6	76.5	8.9		18.4	53.2	28.4		
PHF	.609	.658	.725	.664	.717	.743	.750	.741	.691	.757	.800	.783	.929	.694	.714	.734	.781

Counts Unlimited, Inc.
PO Box 1178
Corona, CA 92878
(951) 268-6268

City of El Centro
N/S: S 8th Street
E/W: Aurora Drive
Weather: Clear

File Name : 03_ECO_S 8th_Aur AM
Site Code : 05724905
Start Date : 10/23/2024
Page No : 2

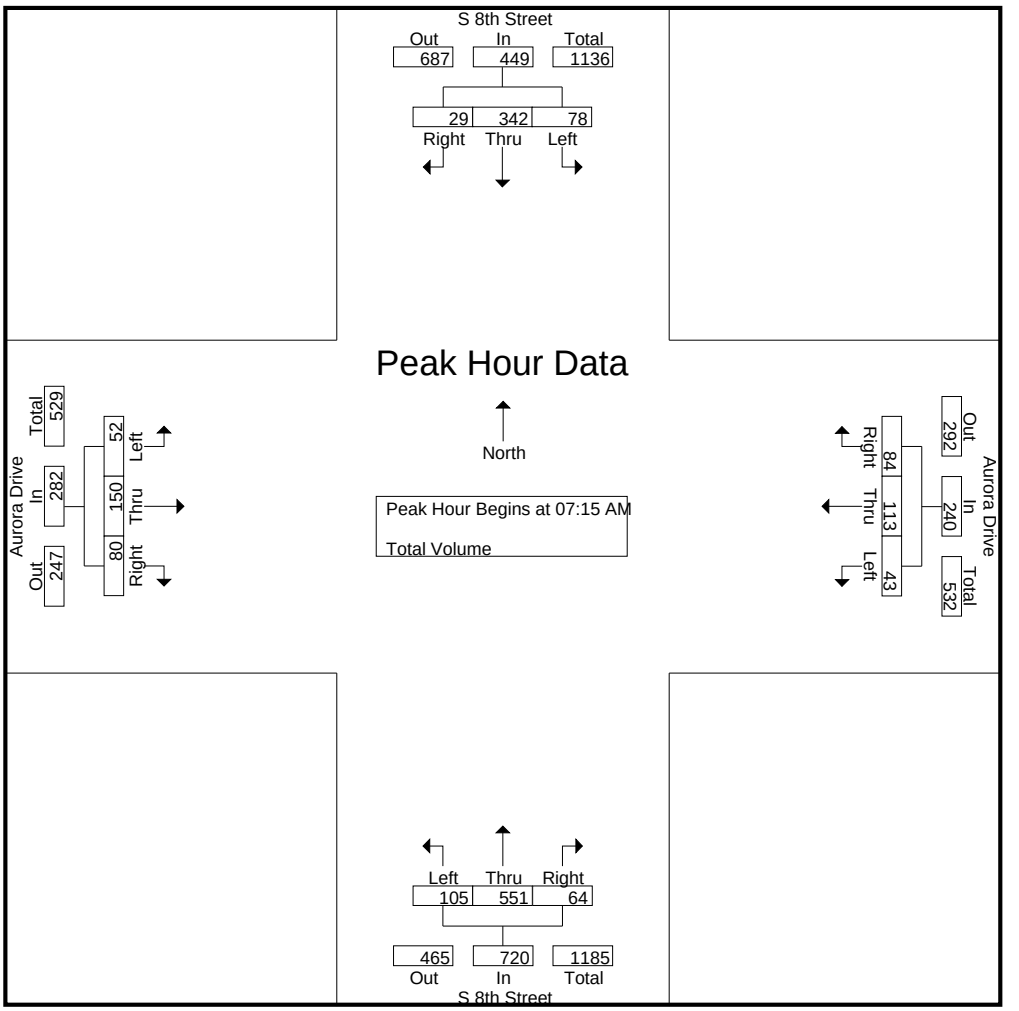

Peak Hour Analysis From 07:00 AM to 08:45 AM - Peak 1 of 1
Peak Hour for Each Approach Begins at:

	07:30 AM				07:15 AM				07:15 AM				07:15 AM			
+0 mins.	21	83	5	109	6	21	19	46	20	124	9	153	12	21	12	45
+15 mins.	**32**	**130**	7	**169**	**15**	**38**	**28**	**81**	31	**182**	17	**230**	13	27	20	60
+30 mins.	18	79	10	107	10	29	28	67	**38**	151	**20**	209	**14**	**54**	**28**	**96**
+45 mins.	10	70	**11**	91	12	25	9	46	16	94	18	128	13	48	20	81
Total Volume	81	362	33	476	43	113	84	240	105	551	64	720	52	150	80	282
% App. Total	17	76.1	6.9		17.9	47.1	35		14.6	76.5	8.9		18.4	53.2	28.4	
PHF	.633	.696	.750	.704	.717	.743	.750	.741	.691	.757	.800	.783	.929	.694	.714	.734

Counts Unlimited, Inc.
PO Box 1178
Corona, CA 92878
(951) 268-6268

City of El Centro
N/S: S 8th Street
E/W: Aurora Drive
Weather: Clear

File Name : 03_ECO_S 8th_Aur PM
Site Code : 05724905
Start Date : 10/23/2024
Page No : 1

Groups Printed- Total Volume

	S 8th Street Southbound				Aurora Drive Westbound				S 8th Street Northbound				Aurora Drive Eastbound				
Start Time	Left	Thru	Right	App. Total	Left	Thru	Right	App. Total	Left	Thru	Right	App. Total	Left	Thru	Right	App. Total	Int. Total
04:00 PM	18	110	14	142	8	19	17	44	4	77	5	86	14	23	12	49	321
04:15 PM	16	104	13	133	11	18	13	42	7	83	3	93	8	22	9	39	307
04:30 PM	15	92	5	112	14	26	9	49	12	88	9	109	11	21	22	54	324
04:45 PM	15	118	13	146	10	21	12	43	8	109	10	127	16	35	19	70	386
Total	64	424	45	533	43	84	51	178	31	357	27	415	49	101	62	212	1338
05:00 PM	36	169	16	221	8	24	10	42	21	111	8	140	10	29	18	57	460
05:15 PM	22	110	13	145	10	33	10	53	13	100	11	124	6	17	20	43	365
05:30 PM	20	100	14	134	13	25	13	51	13	72	8	93	7	32	18	57	335
05:45 PM	21	80	6	107	3	24	13	40	13	105	13	131	7	20	12	39	317
Total	99	459	49	607	34	106	46	186	60	388	40	488	30	98	68	196	1477
Grand Total	163	883	94	1140	77	190	97	364	91	745	67	903	79	199	130	408	2815
Apprch %	14.3	77.5	8.2		21.2	52.2	26.6		10.1	82.5	7.4		19.4	48.8	31.9		
Total %	5.8	31.4	3.3	40.5	2.7	6.7	3.4	12.9	3.2	26.5	2.4	32.1	2.8	7.1	4.6	14.5	

	S 8th Street Southbound				Aurora Drive Westbound				S 8th Street Northbound				Aurora Drive Eastbound				
Start Time	Left	Thru	Right	App. Total	Left	Thru	Right	App. Total	Left	Thru	Right	App. Total	Left	Thru	Right	App. Total	Int. Total
Peak Hour Analysis From 04:00 PM to 05:45 PM - Peak 1 of 1																	
Peak Hour for Entire Intersection Begins at 04:45 PM																	
04:45 PM	15	118	13	146	10	21	12	43	8	109	10	127	**16**	**35**	19	**70**	386
05:00 PM	**36**	**169**	**16**	**221**	8	24	10	42	**21**	**111**	8	**140**	10	29	18	57	**460**
05:15 PM	22	110	13	145	10	**33**	10	**53**	13	100	**11**	124	6	17	**20**	43	365
05:30 PM	20	100	14	134	**13**	25	**13**	51	13	72	8	93	7	32	18	57	335
Total Volume	93	497	56	646	41	103	45	189	55	392	37	484	39	113	75	227	1546
% App. Total	14.4	76.9	8.7		21.7	54.5	23.8		11.4	81	7.6		17.2	49.8	33		
PHF	.646	.735	.875	.731	.788	.780	.865	.892	.655	.883	.841	.864	.609	.807	.938	.811	.840

Counts Unlimited, Inc.
PO Box 1178
Corona, CA 92878
(951) 268-6268

City of El Centro
N/S: S 8th Street
E/W: Aurora Drive
Weather: Clear

File Name : 03_ECO_S 8th_Aur PM
Site Code : 05724905
Start Date : 10/23/2024
Page No : 2

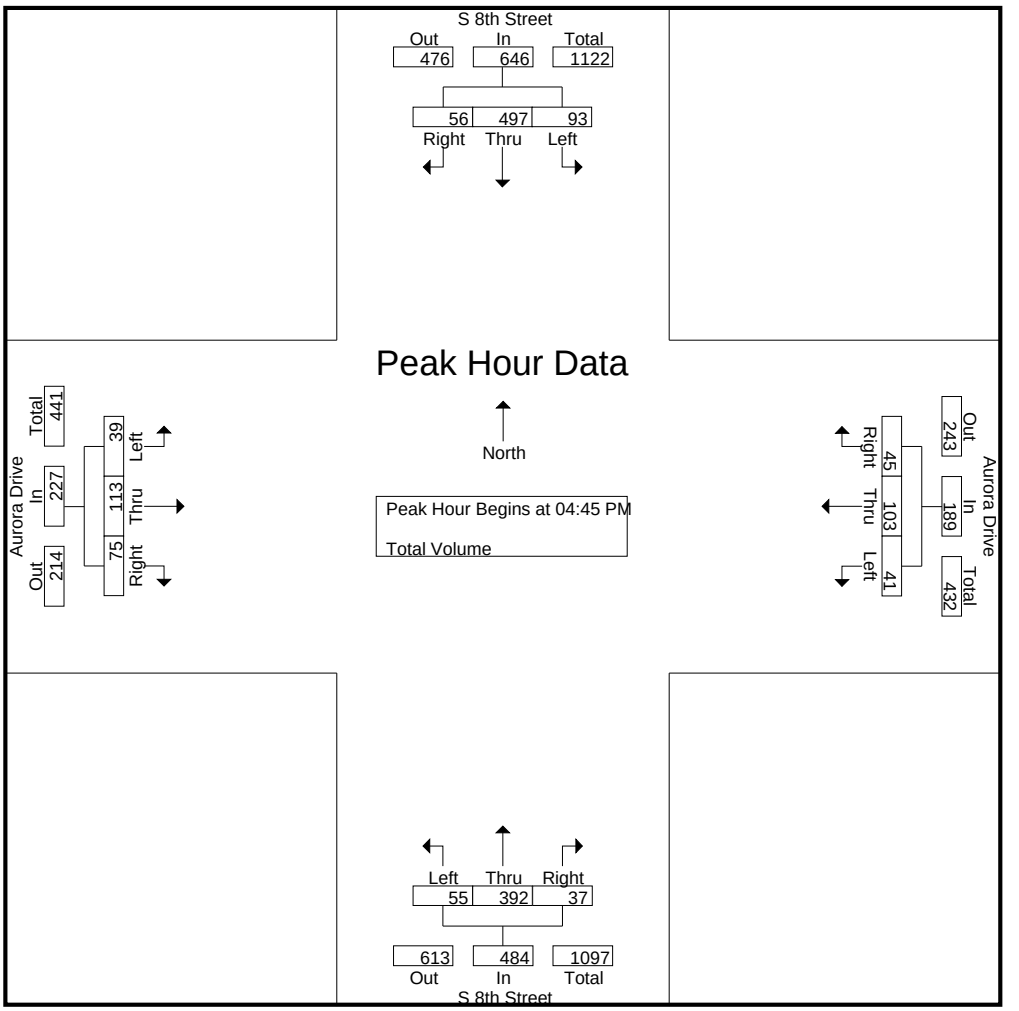

Peak Hour Analysis From 04:00 PM to 05:45 PM - Peak 1 of 1
Peak Hour for Each Approach Begins at:

	04:45 PM				04:45 PM				04:30 PM				04:45 PM			
+0 mins.	15	118	13	146	10	21	12	43	12	88	9	109	**16**	**35**	19	**70**
+15 mins.	**36**	**169**	**16**	**221**	8	24	10	42	8	109	10	127	10	29	18	57
+30 mins.	22	110	13	145	10	**33**	10	**53**	**21**	**111**	8	**140**	6	17	**20**	43
+45 mins.	20	100	14	134	**13**	25	**13**	51	13	100	**11**	124	7	32	18	57
Total Volume	93	497	56	646	41	103	45	189	54	408	38	500	39	113	75	227
% App. Total	14.4	76.9	8.7		21.7	54.5	23.8		10.8	81.6	7.6		17.2	49.8	33	
PHF	.646	.735	.875	.731	.788	.780	.865	.892	.643	.919	.864	.893	.609	.807	.938	.811

Counts Unlimited, Inc.
PO Box 1178
Corona, CA 92878
(951) 268-6268

City of El Centro
N/S: SR-86
E/W: Aurora Drive
Weather: Clear

File Name : 04_ECO_SR86_Aur AM
Site Code : 05724905
Start Date : 10/23/2024
Page No : 1

Groups Printed- Total Volume

	SR-86 Southbound				Aurora Drive Westbound				SR-86 Northbound				El Centro Post-Acute Driveway Eastbound				
Start Time	Left	Thru	Right	App. Total	Left	Thru	Right	App. Total	Left	Thru	Right	App. Total	Left	Thru	Right	App. Total	Int. Total
07:00 AM	2	70	6	78	6	7	0	13	7	92	2	101	8	5	14	27	219
07:15 AM	2	93	3	98	15	10	2	27	8	125	5	138	10	9	30	49	312
07:30 AM	2	99	6	107	16	33	5	54	18	122	2	142	24	12	33	69	372
07:45 AM	3	146	12	161	20	33	8	61	22	163	8	193	29	26	42	97	512
Total	9	408	27	444	57	83	15	155	55	502	17	574	71	52	119	242	1415
08:00 AM	3	141	6	150	12	9	3	24	15	154	9	178	31	31	36	98	450
08:15 AM	4	104	8	116	10	5	3	18	11	118	8	137	17	8	32	57	328
08:30 AM	2	116	6	124	18	6	5	29	15	126	5	146	8	5	23	36	335
08:45 AM	1	127	5	133	10	4	0	14	18	145	8	171	7	6	33	46	364
Total	10	488	25	523	50	24	11	85	59	543	30	632	63	50	124	237	1477
Grand Total	19	896	52	967	107	107	26	240	114	1045	47	1206	134	102	243	479	2892
Apprch %	2	92.7	5.4		44.6	44.6	10.8		9.5	86.7	3.9		28	21.3	50.7		
Total %	0.7	31	1.8	33.4	3.7	3.7	0.9	8.3	3.9	36.1	1.6	41.7	4.6	3.5	8.4	16.6	

	SR-86 Southbound				Aurora Drive Westbound				SR-86 Northbound				El Centro Post-Acute Driveway Eastbound				
Start Time	Left	Thru	Right	App. Total	Left	Thru	Right	App. Total	Left	Thru	Right	App. Total	Left	Thru	Right	App. Total	Int. Total
Peak Hour Analysis From 07:00 AM to 08:45 AM - Peak 1 of 1																	
Peak Hour for Entire Intersection Begins at 07:30 AM																	
07:30 AM	2	99	6	107	16	**33**	5	54	18	122	2	142	24	12	33	69	372
07:45 AM	3	**146**	**12**	**161**	**20**	33	**8**	**61**	**22**	**163**	8	**193**	29	26	**42**	97	**512**
08:00 AM	3	141	6	150	12	9	3	24	15	154	**9**	178	**31**	**31**	36	**98**	450
08:15 AM	**4**	104	8	116	10	5	3	18	11	118	8	137	17	8	32	57	328
Total Volume	12	490	32	534	58	80	19	157	66	557	27	650	101	77	143	321	1662
% App. Total	2.2	91.8	6		36.9	51	12.1		10.2	85.7	4.2		31.5	24	44.5		
PHF	.750	.839	.667	.829	.725	.606	.594	.643	.750	.854	.750	.842	.815	.621	.851	.819	.812

Counts Unlimited, Inc.
PO Box 1178
Corona, CA 92878
(951) 268-6268

City of El Centro
N/S: SR-86
E/W: Aurora Drive
Weather: Clear

File Name : 04_ECO_SR86_Aur AM
Site Code : 05724905
Start Date : 10/23/2024
Page No : 2

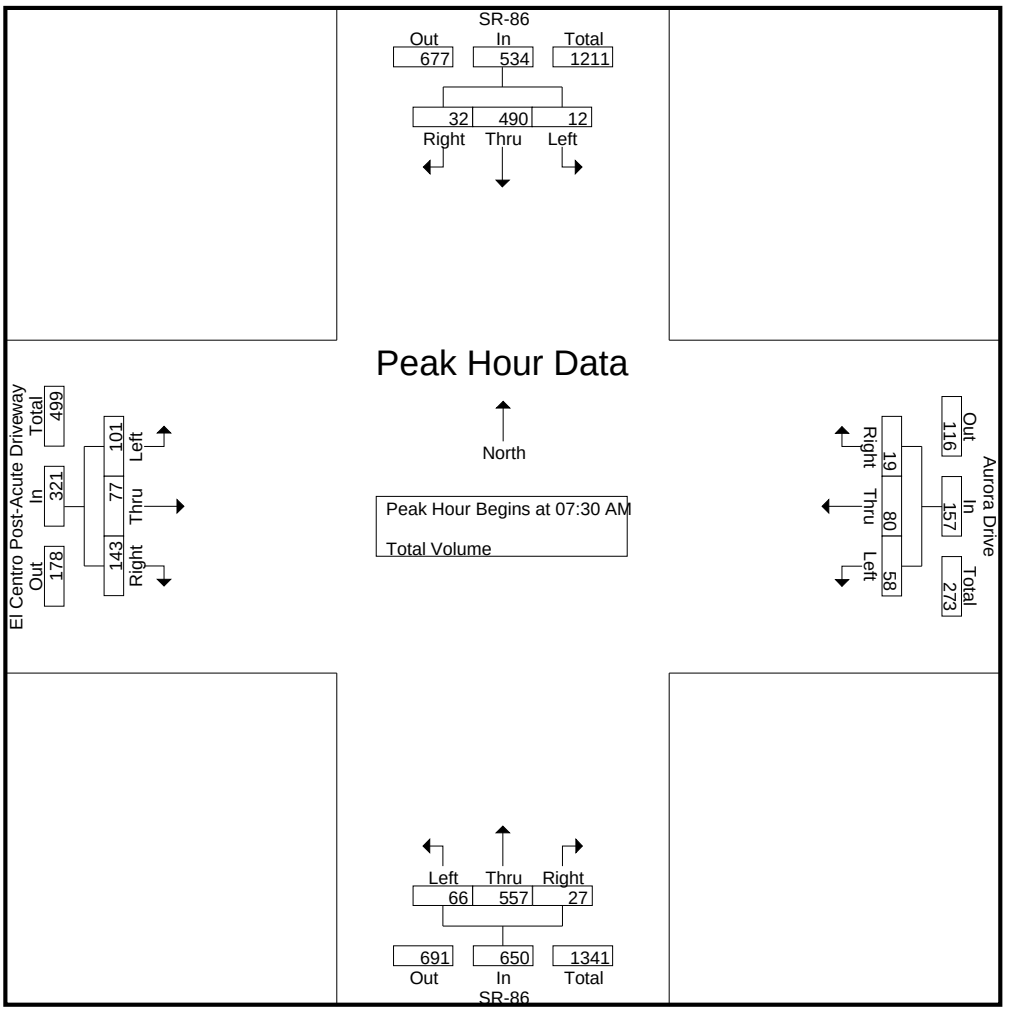

Peak Hour Analysis From 07:00 AM to 08:45 AM - Peak 1 of 1
Peak Hour for Each Approach Begins at:

	07:45 AM				07:15 AM				07:45 AM				07:30 AM			
+0 mins.	3	**146**	**12**	**161**	15	10	2	27	**22**	**163**	8	**193**	24	12	33	69
+15 mins.	3	141	6	150	16	**33**	5	54	15	154	**9**	178	29	26	**42**	97
+30 mins.	**4**	104	8	116	**20**	33	**8**	**61**	11	118	8	137	**31**	**31**	36	**98**
+45 mins.	2	116	6	124	12	9	3	24	15	126	5	146	17	8	32	57
Total Volume	12	507	32	551	63	85	18	166	63	561	30	654	101	77	143	321
% App. Total	2.2	92	5.8		38	51.2	10.8		9.6	85.8	4.6		31.5	24	44.5	
PHF	.750	.868	.667	.856	.788	.644	.563	.680	.716	.860	.833	.847	.815	.621	.851	.819

Counts Unlimited, Inc.
PO Box 1178
Corona, CA 92878
(951) 268-6268

City of El Centro
N/S: SR-86
E/W: Aurora Drive
Weather: Clear

File Name : 04_ECO_SR86_Aur PM
Site Code : 05724905
Start Date : 10/23/2024
Page No : 1

Groups Printed- Total Volume

	SR-86 Southbound				Aurora Drive Westbound				SR-86 Northbound				El Centro Post-Acute Driveway Eastbound				
Start Time	Left	Thru	Right	App. Total	Left	Thru	Right	App. Total	Left	Thru	Right	App. Total	Left	Thru	Right	App. Total	Int. Total
04:00 PM	6	185	6	197	19	13	3	35	16	126	7	149	13	9	30	52	433
04:15 PM	0	152	11	163	25	8	2	35	21	124	6	151	12	12	35	59	408
04:30 PM	3	143	6	152	9	8	2	19	21	120	6	147	9	8	25	42	360
04:45 PM	2	145	10	157	15	11	3	29	15	153	5	173	14	7	37	58	417
Total	11	625	33	669	68	40	10	118	73	523	24	620	48	36	127	211	1618
05:00 PM	2	198	12	212	12	10	3	25	15	161	4	180	19	22	54	95	512
05:15 PM	6	176	9	191	20	7	5	32	22	149	8	179	18	11	44	73	475
05:30 PM	7	174	19	200	10	6	7	23	12	133	13	158	18	9	43	70	451
05:45 PM	2	167	11	180	13	3	1	17	18	153	8	179	17	5	36	58	434
Total	17	715	51	783	55	26	16	97	67	596	33	696	72	47	177	296	1872
Grand Total	28	1340	84	1452	123	66	26	215	140	1119	57	1316	120	83	304	507	3490
Apprch %	1.9	92.3	5.8		57.2	30.7	12.1		10.6	85	4.3		23.7	16.4	60		
Total %	0.8	38.4	2.4	41.6	3.5	1.9	0.7	6.2	4	32.1	1.6	37.7	3.4	2.4	8.7	14.5	

	SR-86 Southbound				Aurora Drive Westbound				SR-86 Northbound				El Centro Post-Acute Driveway Eastbound				
Start Time	Left	Thru	Right	App. Total	Left	Thru	Right	App. Total	Left	Thru	Right	App. Total	Left	Thru	Right	App. Total	Int. Total
Peak Hour Analysis From 04:00 PM to 05:45 PM - Peak 1 of 1																	
Peak Hour for Entire Intersection Begins at 05:00 PM																	
05:00 PM	2	**198**	12	**212**	12	**10**	3	25	15	**161**	4	**180**	**19**	**22**	**54**	**95**	**512**
05:15 PM	6	176	9	191	**20**	7	5	**32**	**22**	149	8	179	18	11	44	73	475
05:30 PM	**7**	174	**19**	200	10	6	**7**	23	12	133	**13**	158	18	9	43	70	451
05:45 PM	2	167	11	180	13	3	1	17	18	153	8	179	17	5	36	58	434
Total Volume	17	715	51	783	55	26	16	97	67	596	33	696	72	47	177	296	1872
% App. Total	2.2	91.3	6.5		56.7	26.8	16.5		9.6	85.6	4.7		24.3	15.9	59.8		
PHF	.607	.903	.671	.923	.688	.650	.571	.758	.761	.925	.635	.967	.947	.534	.819	.779	.914

Counts Unlimited, Inc.
PO Box 1178
Corona, CA 92878
(951) 268-6268

City of El Centro
N/S: SR-86
E/W: Aurora Drive
Weather: Clear

File Name : 04_ECO_SR86_Aur PM
Site Code : 05724905
Start Date : 10/23/2024
Page No : 2

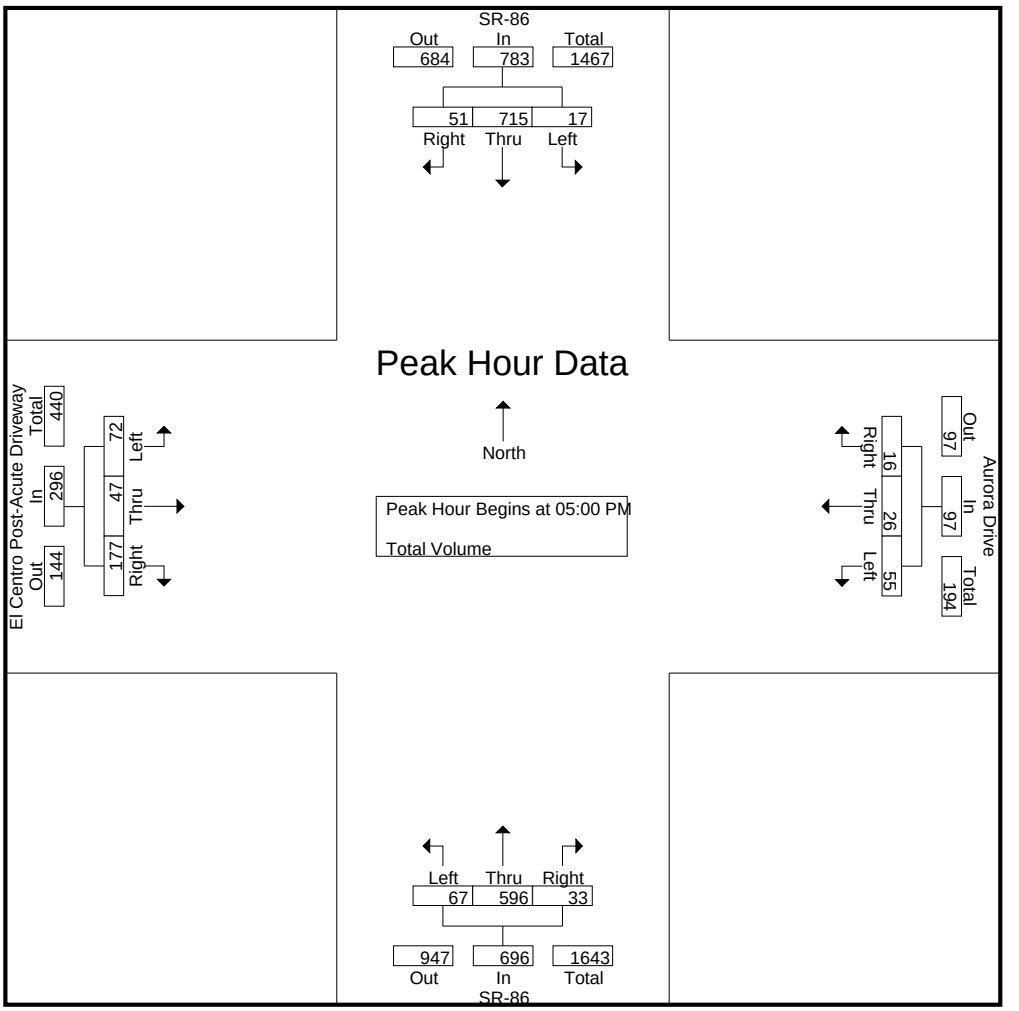

Peak Hour Analysis From 04:00 PM to 05:45 PM - Peak 1 of 1
Peak Hour for Each Approach Begins at:

	05:00 PM				04:00 PM				05:00 PM				04:45 PM			
+0 mins.	2	**198**	12	**212**	19	**13**	**3**	**35**	15	**161**	4	**180**	14	7	37	58
+15 mins.	6	176	9	191	**25**	8	2	35	**22**	149	8	179	**19**	**22**	**54**	**95**
+30 mins.	**7**	174	**19**	200	9	8	2	19	12	133	**13**	158	18	11	44	73
+45 mins.	2	167	11	180	15	11	3	29	18	153	8	179	18	9	43	70
Total Volume	17	715	51	783	68	40	10	118	67	596	33	696	69	49	178	296
% App. Total	2.2	91.3	6.5		57.6	33.9	8.5		9.6	85.6	4.7		23.3	16.6	60.1	
PHF	.607	.903	.671	.923	.680	.769	.833	.843	.761	.925	.635	.967	.908	.557	.824	.779

Counts Unlimited, Inc.
PO Box 1178
Corona, CA 92878
(951) 268-6268

City of El Centro
N/S: Imperial Avenue
E/W: Ocotillo Drive
Weather: Clear

File Name : 05_ECO_Imp_Oco AM
Site Code : 05724905
Start Date : 10/23/2024
Page No : 1

Groups Printed- Total Volume

	Imperial Avenue Southbound				Ocotillo Drive Westbound				Imperial Avenue Northbound				Ocotillo Drive Eastbound				
Start Time	Left	Thru	Right	App. Total	Left	Thru	Right	App. Total	Left	Thru	Right	App. Total	Left	Thru	Right	App. Total	Int. Total
07:00 AM	4	51	7	62	7	5	6	18	27	80	4	111	10	9	25	44	235
07:15 AM	1	69	22	92	14	18	8	40	51	136	6	193	29	16	51	96	421
07:30 AM	4	135	23	162	12	32	17	61	58	235	10	303	43	25	71	139	665
07:45 AM	13	162	29	204	6	33	16	55	78	238	19	335	49	43	114	206	800
Total	22	417	81	520	39	88	47	174	214	689	39	942	131	93	261	485	2121
08:00 AM	10	100	18	128	12	27	13	52	47	119	11	177	40	34	80	154	511
08:15 AM	6	75	16	97	5	7	5	17	30	102	7	139	14	7	38	59	312
08:30 AM	7	86	10	103	7	12	11	30	26	120	8	154	16	5	43	64	351
08:45 AM	7	83	12	102	7	8	7	22	17	111	6	134	17	9	37	63	321
Total	30	344	56	430	31	54	36	121	120	452	32	604	87	55	198	340	1495
Grand Total	52	761	137	950	70	142	83	295	334	1141	71	1546	218	148	459	825	3616
Apprch %	5.5	80.1	14.4		23.7	48.1	28.1		21.6	73.8	4.6		26.4	17.9	55.6		
Total %	1.4	21	3.8	26.3	1.9	3.9	2.3	8.2	9.2	31.6	2	42.8	6	4.1	12.7	22.8	

	Imperial Avenue Southbound				Ocotillo Drive Westbound				Imperial Avenue Northbound				Ocotillo Drive Eastbound				
Start Time	Left	Thru	Right	App. Total	Left	Thru	Right	App. Total	Left	Thru	Right	App. Total	Left	Thru	Right	App. Total	Int. Total
Peak Hour Analysis From 07:00 AM to 08:45 AM - Peak 1 of 1																	
Peak Hour for Entire Intersection Begins at 07:15 AM																	
07:15 AM	1	69	22	92	**14**	18	8	40	51	136	6	193	29	16	51	96	421
07:30 AM	4	135	23	162	12	32	**17**	**61**	58	235	10	303	43	25	71	139	665
07:45 AM	**13**	**162**	**29**	**204**	6	**33**	16	55	**78**	**238**	**19**	**335**	**49**	**43**	**114**	**206**	**800**
08:00 AM	10	100	18	128	12	27	13	52	47	119	11	177	40	34	80	154	511
Total Volume	28	466	92	586	44	110	54	208	234	728	46	1008	161	118	316	595	2397
% App. Total	4.8	79.5	15.7		21.2	52.9	26		23.2	72.2	4.6		27.1	19.8	53.1		
PHF	.538	.719	.793	.718	.786	.833	.794	.852	.750	.765	.605	.752	.821	.686	.693	.722	.749

Counts Unlimited, Inc.
PO Box 1178
Corona, CA 92878
(951) 268-6268

City of El Centro
N/S: Imperial Avenue
E/W: Ocotillo Drive
Weather: Clear

File Name : 05_ECO_Imp_Oco AM
Site Code : 05724905
Start Date : 10/23/2024
Page No : 2

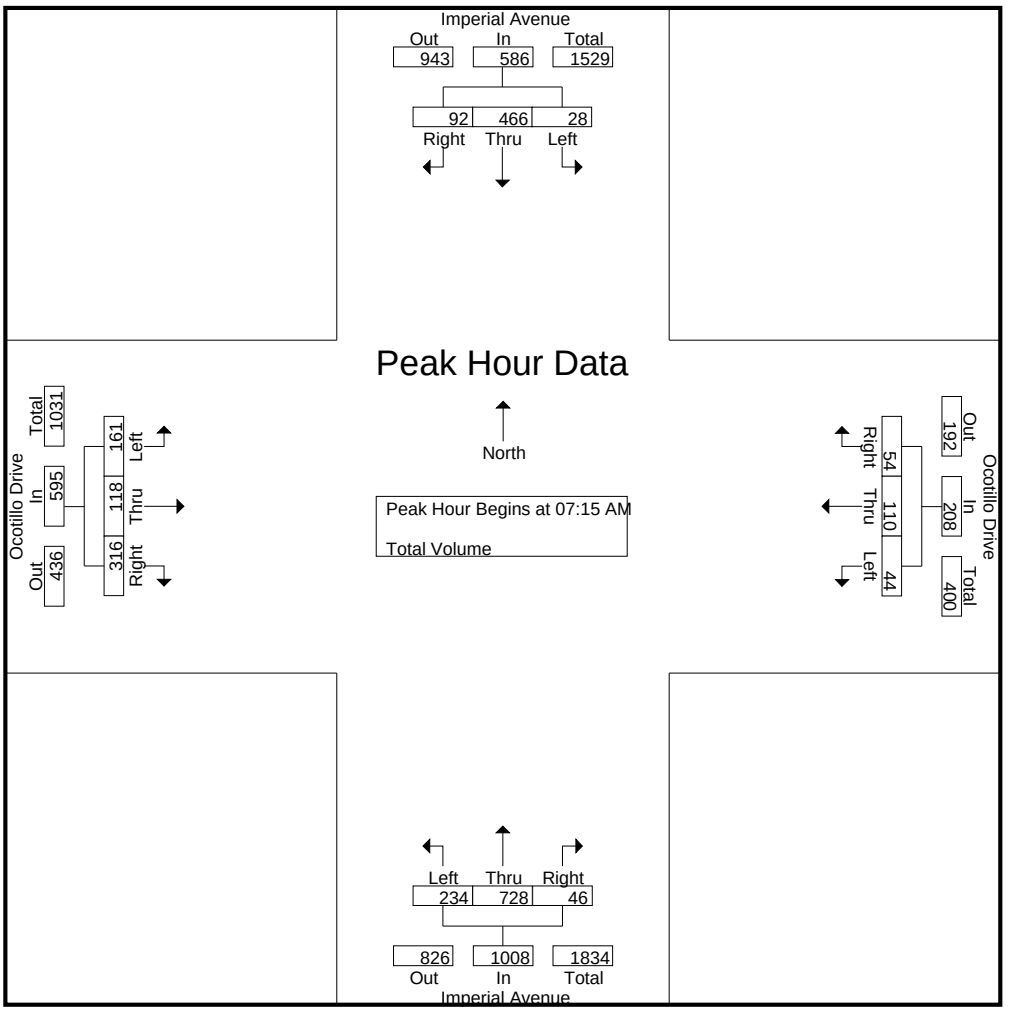

Peak Hour Analysis From 07:00 AM to 08:45 AM - Peak 1 of 1
Peak Hour for Each Approach Begins at:

	07:30 AM				07:15 AM				07:15 AM				07:15 AM			
+0 mins.	4	135	23	162	**14**	18	8	40	51	136	6	193	29	16	51	96
+15 mins.	**13**	**162**	**29**	**204**	12	32	**17**	**61**	58	235	10	303	43	25	71	139
+30 mins.	10	100	18	128	6	**33**	16	55	**78**	**238**	**19**	**335**	**49**	**43**	**114**	**206**
+45 mins.	6	75	16	97	12	27	13	52	47	119	11	177	40	34	80	154
Total Volume	33	472	86	591	44	110	54	208	234	728	46	1008	161	118	316	595
% App. Total	5.6	79.9	14.6		21.2	52.9	26		23.2	72.2	4.6		27.1	19.8	53.1	
PHF	.635	.728	.741	.724	.786	.833	.794	.852	.750	.765	.605	.752	.821	.686	.693	.722

Counts Unlimited, Inc.
PO Box 1178
Corona, CA 92878
(951) 268-6268

City of El Centro
N/S: Imperial Avenue
E/W: Ocotillo Drive
Weather: Clear

File Name : 05_ECO_Imp_Oco PM
Site Code : 05724905
Start Date : 10/23/2024
Page No : 1

Groups Printed- Total Volume

	Imperial Avenue Southbound				Ocotillo Drive Westbound				Imperial Avenue Northbound				Ocotillo Drive Eastbound				
Start Time	Left	Thru	Right	App. Total	Left	Thru	Right	App. Total	Left	Thru	Right	App. Total	Left	Thru	Right	App. Total	Int. Total
04:00 PM	12	152	16	180	20	15	14	49	32	115	16	163	27	19	56	102	494
04:15 PM	9	145	19	173	11	14	15	40	44	138	12	194	29	15	46	90	497
04:30 PM	17	165	18	200	11	16	12	39	39	132	10	181	22	21	66	109	529
04:45 PM	19	153	16	188	17	18	18	53	41	121	5	167	29	10	52	91	499
Total	57	615	69	741	59	63	59	181	156	506	43	705	107	65	220	392	2019
05:00 PM	8	180	23	211	21	12	10	43	43	113	8	164	20	17	67	104	522
05:15 PM	14	165	27	206	21	14	10	45	53	122	14	189	19	11	51	81	521
05:30 PM	14	186	19	219	13	16	12	41	45	136	11	192	26	17	55	98	550
05:45 PM	8	153	17	178	14	9	13	36	35	126	8	169	27	15	35	77	460
Total	44	684	86	814	69	51	45	165	176	497	41	714	92	60	208	360	2053
Grand Total	101	1299	155	1555	128	114	104	346	332	1003	84	1419	199	125	428	752	4072
Apprch %	6.5	83.5	10		37	32.9	30.1		23.4	70.7	5.9		26.5	16.6	56.9		
Total %	2.5	31.9	3.8	38.2	3.1	2.8	2.6	8.5	8.2	24.6	2.1	34.8	4.9	3.1	10.5	18.5	

	Imperial Avenue Southbound				Ocotillo Drive Westbound				Imperial Avenue Northbound				Ocotillo Drive Eastbound				
Start Time	Left	Thru	Right	App. Total	Left	Thru	Right	App. Total	Left	Thru	Right	App. Total	Left	Thru	Right	App. Total	Int. Total
Peak Hour Analysis From 04:00 PM to 05:45 PM - Peak 1 of 1																	
Peak Hour for Entire Intersection Begins at 04:45 PM																	
04:45 PM	**19**	153	16	188	17	**18**	**18**	**53**	41	121	5	167	**29**	10	52	91	499
05:00 PM	8	180	23	211	**21**	12	10	43	43	113	8	164	20	**17**	**67**	**104**	522
05:15 PM	14	165	**27**	206	21	14	10	45	**53**	122	**14**	189	19	11	51	81	521
05:30 PM	14	**186**	19	**219**	13	16	12	41	45	**136**	11	**192**	26	17	55	98	**550**
Total Volume	55	684	85	824	72	60	50	182	182	492	38	712	94	55	225	374	2092
% App. Total	6.7	83	10.3		39.6	33	27.5		25.6	69.1	5.3		25.1	14.7	60.2		
PHF	.724	.919	.787	.941	.857	.833	.694	.858	.858	.904	.679	.927	.810	.809	.840	.899	.951

Counts Unlimited, Inc.
PO Box 1178
Corona, CA 92878
(951) 268-6268

City of El Centro
N/S: Imperial Avenue
E/W: Ocotillo Drive
Weather: Clear

File Name : 05_ECO_Imp_Oco PM
Site Code : 05724905
Start Date : 10/23/2024
Page No : 2

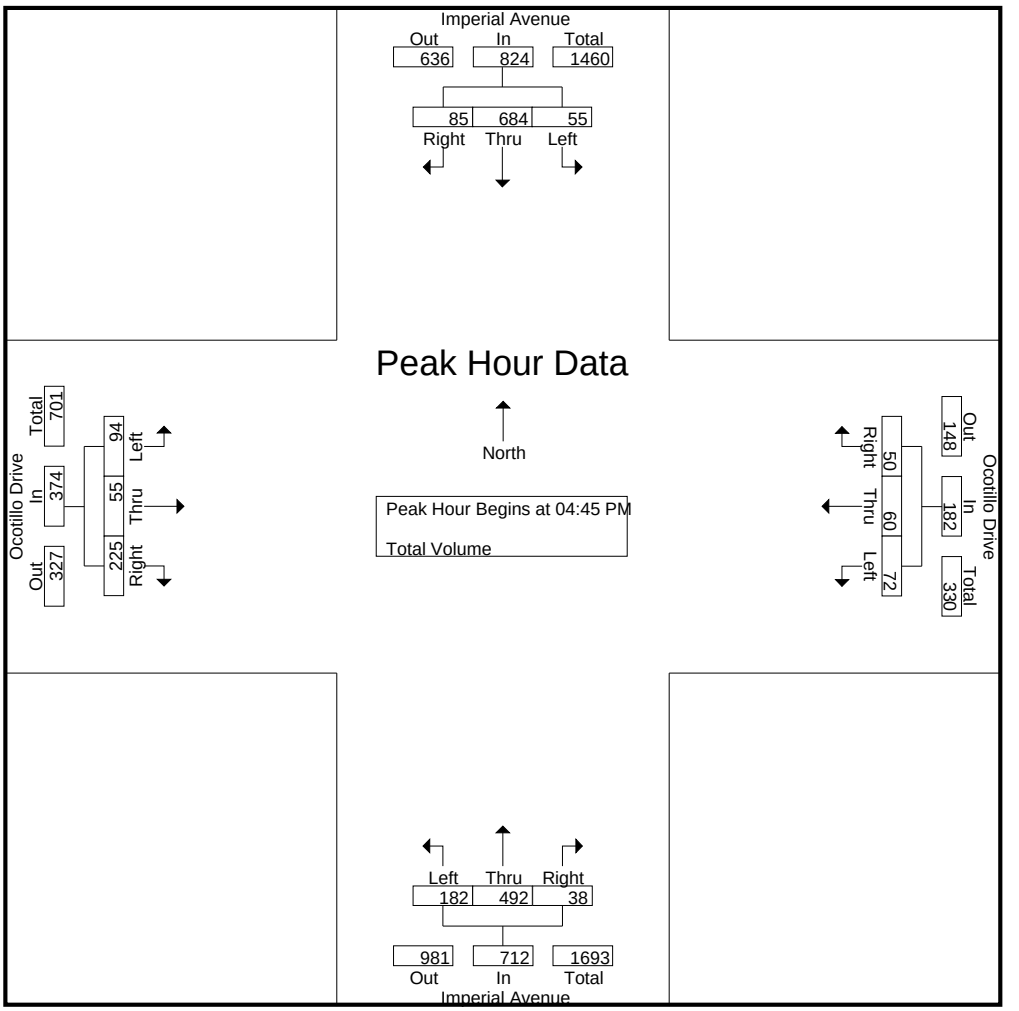

Peak Hour Analysis From 04:00 PM to 05:45 PM - Peak 1 of 1
Peak Hour for Each Approach Begins at:

	04:45 PM				04:45 PM				05:00 PM				04:15 PM			
+0 mins.	**19**	153	16	188	17	**18**	**18**	**53**	43	113	8	164	**29**	15	46	90
+15 mins.	8	180	23	211	**21**	12	10	43	**53**	122	**14**	189	22	**21**	66	**109**
+30 mins.	14	165	**27**	206	21	14	10	45	45	**136**	11	**192**	29	10	52	91
+45 mins.	14	**186**	19	**219**	13	16	12	41	35	126	8	169	20	17	**67**	104
Total Volume	55	684	85	824	72	60	50	182	176	497	41	714	100	63	231	394
% App. Total	6.7	83	10.3		39.6	33	27.5		24.6	69.6	5.7		25.4	16	58.6	
PHF	.724	.919	.787	.941	.857	.833	.694	.858	.830	.914	.732	.930	.862	.750	.862	.904

Counts Unlimited, Inc.
PO Box 1178
Corona, CA 92878
(951) 268-6268

City of El Centro
N/S: Imperial Avenue
E/W: Wake Avenue
Weather: Clear

File Name : 06_ECO_Imp_Wake AM
Site Code : 05724905
Start Date : 10/23/2024
Page No : 1

Groups Printed- Total Volume

	Imperial Avenue Southbound				Wake Avenue Westbound				Imperial Avenue Northbound				Wake Avenue Eastbound				
Start Time	Left	Thru	Right	App. Total	Left	Thru	Right	App. Total	Left	Thru	Right	App. Total	Left	Thru	Right	App. Total	Int. Total
07:00 AM	5	8	6	19	0	12	14	26	4	8	0	12	18	9	6	33	90
07:15 AM	12	7	8	27	0	19	13	32	11	15	0	26	17	13	5	35	120
07:30 AM	18	12	3	33	0	32	7	39	17	25	0	42	23	22	5	50	164
07:45 AM	58	26	12	96	0	24	24	48	20	26	0	46	20	27	12	59	249
Total	93	53	29	175	0	87	58	145	52	74	0	126	78	71	28	177	623
08:00 AM	26	20	7	53	0	11	14	25	5	12	1	18	9	24	10	43	139
08:15 AM	21	9	3	33	0	8	7	15	4	10	0	14	4	17	2	23	85
08:30 AM	20	14	1	35	0	11	14	25	3	3	0	6	9	11	1	21	87
08:45 AM	18	8	8	34	0	11	10	21	4	7	1	12	13	12	7	32	99
Total	85	51	19	155	0	41	45	86	16	32	2	50	35	64	20	119	410
Grand Total	178	104	48	330	0	128	103	231	68	106	2	176	113	135	48	296	1033
Apprch %	53.9	31.5	14.5		0	55.4	44.6		38.6	60.2	1.1		38.2	45.6	16.2		
Total %	17.2	10.1	4.6	31.9	0	12.4	10	22.4	6.6	10.3	0.2	17	10.9	13.1	4.6	28.7	

	Imperial Avenue Southbound				Wake Avenue Westbound				Imperial Avenue Northbound				Wake Avenue Eastbound				
Start Time	Left	Thru	Right	App. Total	Left	Thru	Right	App. Total	Left	Thru	Right	App. Total	Left	Thru	Right	App. Total	Int. Total
Peak Hour Analysis From 07:00 AM to 08:45 AM - Peak 1 of 1																	
Peak Hour for Entire Intersection Begins at 07:15 AM																	
07:15 AM	12	7	8	27	0	19	13	32	11	15	0	26	17	13	5	35	120
07:30 AM	18	12	3	33	0	**32**	7	39	17	25	0	42	**23**	22	5	50	164
07:45 AM	**58**	**26**	**12**	**96**	0	24	**24**	**48**	**20**	**26**	0	**46**	20	**27**	**12**	**59**	**249**
08:00 AM	26	20	7	53	0	11	14	25	5	12	**1**	18	9	24	10	43	139
Total Volume	114	65	30	209	0	86	58	144	53	78	1	132	69	86	32	187	672
% App. Total	54.5	31.1	14.4		0	59.7	40.3		40.2	59.1	0.8		36.9	46	17.1		
PHF	.491	.625	.625	.544	.000	.672	.604	.750	.663	.750	.250	.717	.750	.796	.667	.792	.675

Counts Unlimited, Inc.
PO Box 1178
Corona, CA 92878
(951) 268-6268

City of El Centro
N/S: Imperial Avenue
E/W: Wake Avenue
Weather: Clear

File Name : 06_ECO_Imp_Wake AM
Site Code : 05724905
Start Date : 10/23/2024
Page No : 2

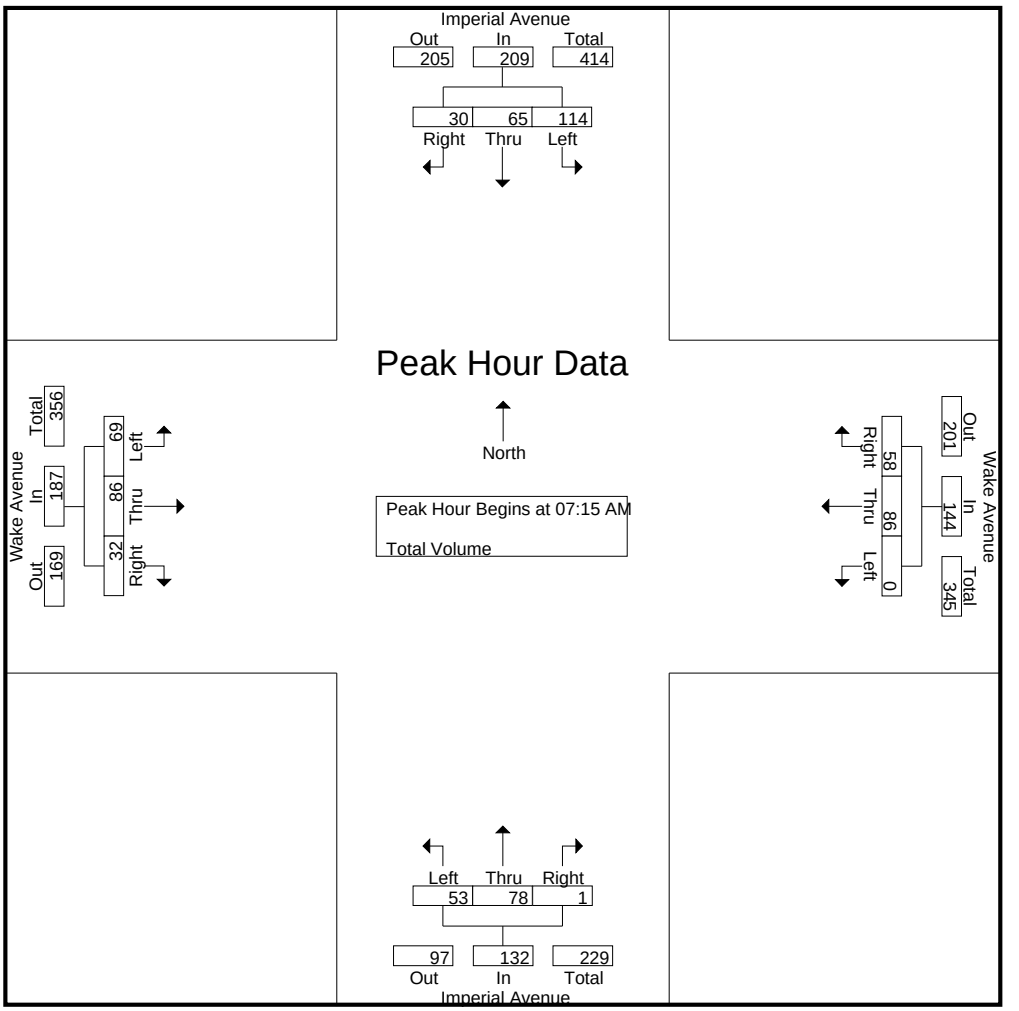

Peak Hour Analysis From 07:00 AM to 08:45 AM - Peak 1 of 1
Peak Hour for Each Approach Begins at:

	07:45 AM				07:00 AM				07:15 AM				07:15 AM			
+0 mins.	**58**	**26**	**12**	**96**	0	12	14	26	11	15	0	26	17	13	5	35
+15 mins.	26	20	7	53	0	19	13	32	17	25	0	42	**23**	22	5	50
+30 mins.	21	9	3	33	0	**32**	7	39	**20**	**26**	0	**46**	20	**27**	**12**	**59**
+45 mins.	20	14	1	35	0	24	**24**	**48**	5	12	**1**	18	9	24	10	43
Total Volume	125	69	23	217	0	87	58	145	53	78	1	132	69	86	32	187
% App. Total	57.6	31.8	10.6		0	60	40		40.2	59.1	0.8		36.9	46	17.1	
PHF	.539	.663	.479	.565	.000	.680	.604	.755	.663	.750	.250	.717	.750	.796	.667	.792

Counts Unlimited, Inc.
PO Box 1178
Corona, CA 92878
(951) 268-6268

City of El Centro
N/S: Imperial Avenue
E/W: Wake Avenue
Weather: Clear

File Name : 06_ECO_Imp_Wake PM
Site Code : 05724905
Start Date : 10/23/2024
Page No : 1

Groups Printed- Total Volume

	Imperial Avenue Southbound				Wake Avenue Westbound				Imperial Avenue Northbound				Wake Avenue Eastbound				
Start Time	Left	Thru	Right	App. Total	Left	Thru	Right	App. Total	Left	Thru	Right	App. Total	Left	Thru	Right	App. Total	Int. Total
04:00 PM	31	21	8	60	0	12	17	29	4	3	1	8	11	11	7	29	126
04:15 PM	33	22	6	61	0	28	13	41	5	2	0	7	10	16	7	33	142
04:30 PM	28	18	4	50	1	21	24	46	5	8	1	14	9	18	9	36	146
04:45 PM	23	24	6	53	0	25	18	43	6	10	0	16	7	12	10	29	141
Total	115	85	24	224	1	86	72	159	20	23	2	45	37	57	33	127	555
05:00 PM	37	19	8	64	0	32	18	50	3	9	0	12	9	21	9	39	165
05:15 PM	26	24	7	57	3	17	23	43	8	9	0	17	6	17	9	32	149
05:30 PM	25	27	9	61	0	30	15	45	4	9	0	13	13	11	10	34	153
05:45 PM	15	32	9	56	0	24	19	43	11	10	3	24	11	21	2	34	157
Total	103	102	33	238	3	103	75	181	26	37	3	66	39	70	30	139	624
Grand Total	218	187	57	462	4	189	147	340	46	60	5	111	76	127	63	266	1179
Apprch %	47.2	40.5	12.3		1.2	55.6	43.2		41.4	54.1	4.5		28.6	47.7	23.7		
Total %	18.5	15.9	4.8	39.2	0.3	16	12.5	28.8	3.9	5.1	0.4	9.4	6.4	10.8	5.3	22.6	

	Imperial Avenue Southbound				Wake Avenue Westbound				Imperial Avenue Northbound				Wake Avenue Eastbound				
Start Time	Left	Thru	Right	App. Total	Left	Thru	Right	App. Total	Left	Thru	Right	App. Total	Left	Thru	Right	App. Total	Int. Total
Peak Hour Analysis From 04:00 PM to 05:45 PM - Peak 1 of 1																	
Peak Hour for Entire Intersection Begins at 05:00 PM																	
05:00 PM	**37**	19	8	**64**	0	**32**	18	**50**	3	9	0	12	9	**21**	9	**39**	**165**
05:15 PM	26	24	7	57	**3**	17	**23**	43	8	9	0	17	6	17	9	32	149
05:30 PM	25	27	**9**	61	0	30	15	45	4	9	0	13	**13**	11	**10**	34	153
05:45 PM	15	**32**	9	56	0	24	19	43	**11**	**10**	**3**	**24**	11	21	2	34	157
Total Volume	103	102	33	238	3	103	75	181	26	37	3	66	39	70	30	139	624
% App. Total	43.3	42.9	13.9		1.7	56.9	41.4		39.4	56.1	4.5		28.1	50.4	21.6		
PHF	.696	.797	.917	.930	.250	.805	.815	.905	.591	.925	.250	.688	.750	.833	.750	.891	.945

Counts Unlimited, Inc.
PO Box 1178
Corona, CA 92878
(951) 268-6268

City of El Centro
N/S: Imperial Avenue
E/W: Wake Avenue
Weather: Clear

File Name : 06_ECO_Imp_Wake PM
Site Code : 05724905
Start Date : 10/23/2024
Page No : 2

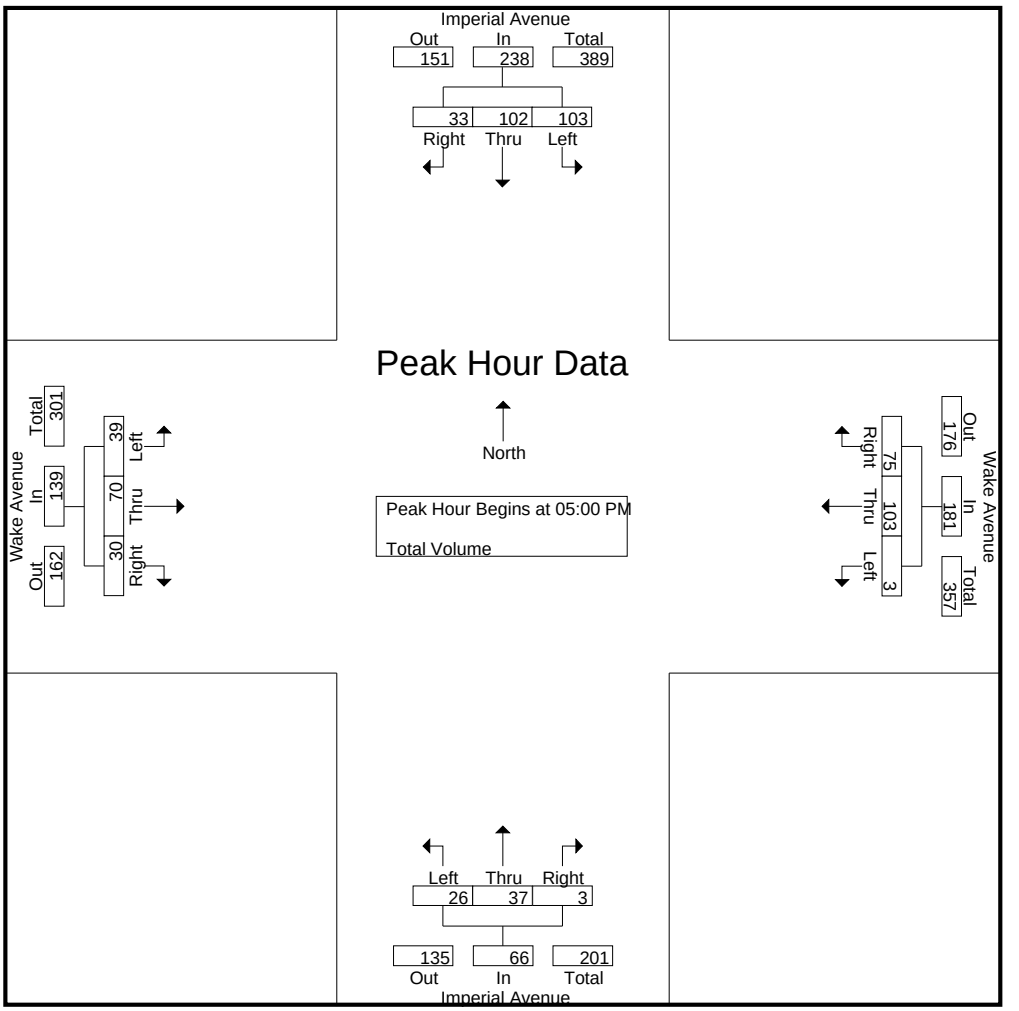

Peak Hour Analysis From 04:00 PM to 05:45 PM - Peak 1 of 1
Peak Hour for Each Approach Begins at:

	05:00 PM				04:30 PM				05:00 PM				05:00 PM			
+0 mins.	**37**	19	8	**64**	1	21	**24**	46	3	9	0	12	9	**21**	9	**39**
+15 mins.	26	24	7	57	0	25	18	43	8	9	0	17	6	17	9	32
+30 mins.	25	27	**9**	61	0	**32**	18	**50**	4	9	0	13	**13**	11	**10**	34
+45 mins.	15	**32**	9	56	**3**	17	23	43	**11**	**10**	**3**	**24**	11	21	2	34
Total Volume	103	102	33	238	4	95	83	182	26	37	3	66	39	70	30	139
% App. Total	43.3	42.9	13.9		2.2	52.2	45.6		39.4	56.1	4.5		28.1	50.4	21.6	
PHF	.696	.797	.917	.930	.333	.742	.865	.910	.591	.925	.250	.688	.750	.833	.750	.891

Counts Unlimited, Inc.
PO Box 1178
Corona, CA 92878
(951) 268-6268

City of El Centro
N/S: S Clark Road
E/W: Danenberg Drive
Weather: Clear

File Name : 07_ECO_Clark_Dan AM
Site Code : 05724905
Start Date : 10/23/2024
Page No : 1

Groups Printed- Total Volume

	S Clark Road Southbound			S Clark Road Northbound			Danenberg Drive Eastbound			
Start Time	Thru	Right	App. Total	Left	Thru	App. Total	Left	Right	App. Total	Int. Total
07:00 AM	40	4	44	7	73	80	0	9	9	133
07:15 AM	52	2	54	19	153	172	0	14	14	240
07:30 AM	106	3	109	34	220	254	1	19	20	383
07:45 AM	120	2	122	30	133	163	3	35	38	323
Total	318	11	329	90	579	669	4	77	81	1079
08:00 AM	80	3	83	11	114	125	0	23	23	231
08:15 AM	58	0	58	13	99	112	0	11	11	181
08:30 AM	42	1	43	4	74	78	1	13	14	135
08:45 AM	45	0	45	10	72	82	0	13	13	140
Total	225	4	229	38	359	397	1	60	61	687
Grand Total	543	15	558	128	938	1066	5	137	142	1766
Apprch %	97.3	2.7		12	88		3.5	96.5		
Total %	30.7	0.8	31.6	7.2	53.1	60.4	0.3	7.8	8	

	S Clark Road Southbound			S Clark Road Northbound			Danenberg Drive Eastbound			
Start Time	Thru	Right	App. Total	Left	Thru	App. Total	Left	Right	App. Total	Int. Total
Peak Hour Analysis From 07:00 AM to 08:45 AM - Peak 1 of 1										
Peak Hour for Entire Intersection Begins at 07:15 AM										
07:15 AM	52	2	54	19	153	172	0	14	14	240
07:30 AM	106	**3**	109	**34**	**220**	**254**	1	19	20	**383**
07:45 AM	**120**	2	**122**	30	133	163	**3**	**35**	**38**	323
08:00 AM	80	3	83	11	114	125	0	23	23	231
Total Volume	358	10	368	94	620	714	4	91	95	1177
% App. Total	97.3	2.7		13.2	86.8		4.2	95.8		
PHF	.746	.833	.754	.691	.705	.703	.333	.650	.625	.768

Counts Unlimited, Inc.
PO Box 1178
Corona, CA 92878
(951) 268-6268

City of El Centro
N/S: S Clark Road
E/W: Danenberg Drive
Weather: Clear

File Name : 07_ECO_Clark_Dan AM
Site Code : 05724905
Start Date : 10/23/2024
Page No : 2

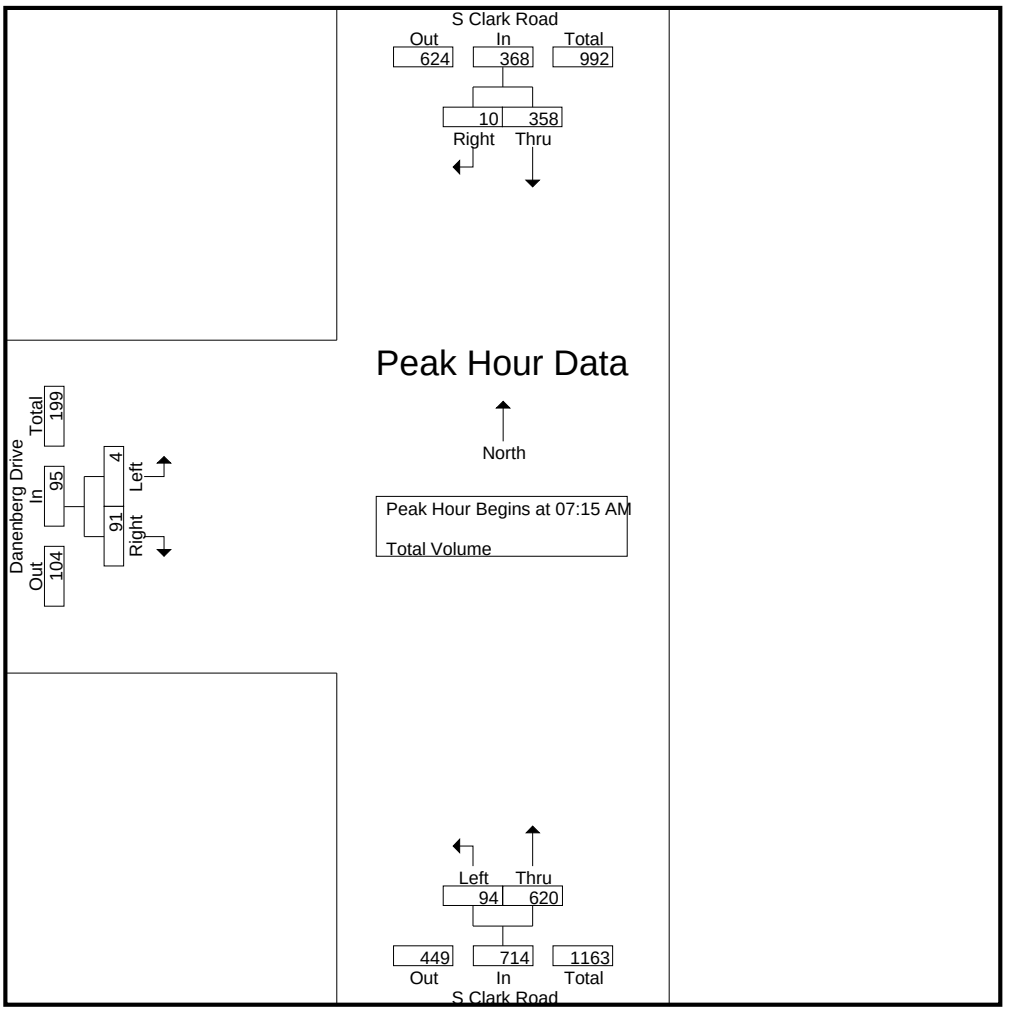

Peak Hour Analysis From 07:00 AM to 08:45 AM - Peak 1 of 1
Peak Hour for Each Approach Begins at:

	07:30 AM			07:15 AM			07:15 AM		
+0 mins.	106	**3**	109	19	153	172	0	14	14
+15 mins.	**120**	2	**122**	**34**	**220**	**254**	1	19	20
+30 mins.	80	3	83	30	133	163	**3**	**35**	**38**
+45 mins.	58	0	58	11	114	125	0	23	23
Total Volume	364	8	372	94	620	714	4	91	95
% App. Total	97.8	2.2		13.2	86.8		4.2	95.8	
PHF	.758	.667	.762	.691	.705	.703	.333	.650	.625

Counts Unlimited, Inc.
PO Box 1178
Corona, CA 92878
(951) 268-6268

City of El Centro
N/S: S Clark Road
E/W: Danenberg Drive
Weather: Clear

File Name : 07_ECO_Clark_Dan PM
Site Code : 05724905
Start Date : 10/23/2024
Page No : 1

Groups Printed- Total Volume

	S Clark Road Southbound			S Clark Road Northbound			Danenberg Drive Eastbound			
Start Time	Thru	Right	App. Total	Left	Thru	App. Total	Left	Right	App. Total	Int. Total
04:00 PM	109	1	110	3	64	67	2	28	30	207
04:15 PM	106	0	106	6	67	73	0	21	21	200
04:30 PM	96	1	97	9	85	94	3	26	29	220
04:45 PM	98	1	99	14	93	107	1	29	30	236
Total	409	3	412	32	309	341	6	104	110	863
05:00 PM	167	1	168	8	117	125	1	33	34	327
05:15 PM	99	3	102	10	85	95	0	22	22	219
05:30 PM	114	3	117	10	76	86	2	35	37	240
05:45 PM	100	0	100	17	102	119	4	29	33	252
Total	480	7	487	45	380	425	7	119	126	1038
Grand Total	889	10	899	77	689	766	13	223	236	1901
Apprch %	98.9	1.1		10.1	89.9		5.5	94.5		
Total %	46.8	0.5	47.3	4.1	36.2	40.3	0.7	11.7	12.4	

	S Clark Road Southbound			S Clark Road Northbound			Danenberg Drive Eastbound			
Start Time	Thru	Right	App. Total	Left	Thru	App. Total	Left	Right	App. Total	Int. Total
Peak Hour Analysis From 04:00 PM to 05:45 PM - Peak 1 of 1										
Peak Hour for Entire Intersection Begins at 05:00 PM										
05:00 PM	**167**	1	**168**	8	**117**	**125**	1	33	34	**327**
05:15 PM	99	**3**	102	10	85	95	0	22	22	219
05:30 PM	114	3	117	10	76	86	2	**35**	**37**	240
05:45 PM	100	0	100	**17**	102	119	**4**	29	33	252
Total Volume	480	7	487	45	380	425	7	119	126	1038
% App. Total	98.6	1.4		10.6	89.4		5.6	94.4		
PHF	.719	.583	.725	.662	.812	.850	.438	.850	.851	.794

Counts Unlimited, Inc.
PO Box 1178
Corona, CA 92878
(951) 268-6268

City of El Centro
N/S: S Clark Road
E/W: Danenberg Drive
Weather: Clear

File Name : 07_ECO_Clark_Dan PM
Site Code : 05724905
Start Date : 10/23/2024
Page No : 2

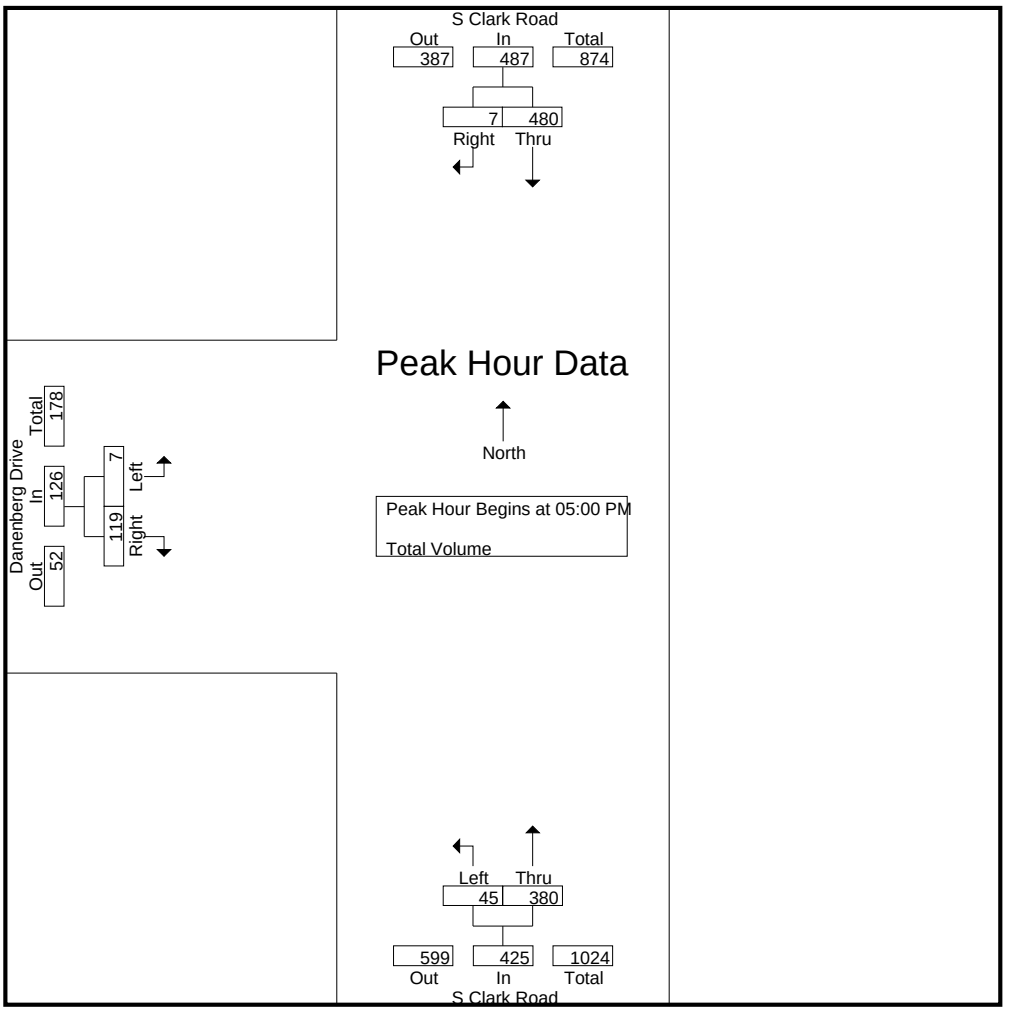

Peak Hour Analysis From 04:00 PM to 05:45 PM - Peak 1 of 1
Peak Hour for Each Approach Begins at:

	05:00 PM			05:00 PM			05:00 PM		
+0 mins.	**167**	1	**168**	8	**117**	**125**	1	33	34
+15 mins.	99	**3**	102	10	85	95	0	22	22
+30 mins.	114	3	117	10	76	86	2	**35**	**37**
+45 mins.	100	0	100	**17**	102	119	**4**	29	33
Total Volume	480	7	487	45	380	425	7	119	126
% App. Total	98.6	1.4		10.6	89.4		5.6	94.4	
PHF	.719	.583	.725	.662	.812	.850	.438	.850	.851

Counts Unlimited, Inc.
PO Box 1178
Corona, CA 92878
(951) 268-6268

County of Imperial
N/S: Austin Road
E/W: W McCabe Road
Weather: Clear

File Name : 08_CIM_Aus_McC AM
Site Code : 05724905
Start Date : 10/23/2024
Page No : 1

Groups Printed- Total Volume

	Austin Road Southbound				W McCabe Road Westbound				Austin Road Northbound				W McCabe Road Eastbound				
Start Time	Left	Thru	Right	App. Total	Left	Thru	Right	App. Total	Left	Thru	Right	App. Total	Left	Thru	Right	App. Total	Int. Total
07:00 AM	12	7	16	35	1	34	10	45	0	2	0	2	6	14	5	25	107
07:15 AM	21	7	28	56	3	32	7	42	1	7	0	8	3	18	0	21	127
07:30 AM	10	13	62	85	7	82	2	91	12	31	23	66	31	26	5	62	304
07:45 AM	16	19	64	99	10	67	8	85	19	39	37	95	46	46	12	104	383
Total	59	46	170	275	21	215	27	263	32	79	60	171	86	104	22	212	921
08:00 AM	9	6	51	66	10	35	4	49	13	38	35	86	39	54	7	100	301
08:15 AM	5	6	3	14	1	12	5	18	4	4	5	13	1	7	1	9	54
08:30 AM	8	3	6	17	1	6	5	12	1	5	2	8	4	6	1	11	48
08:45 AM	5	5	4	14	0	9	8	17	2	3	3	8	2	16	2	20	59
Total	27	20	64	111	12	62	22	96	20	50	45	115	46	83	11	140	462
Grand Total	86	66	234	386	33	277	49	359	52	129	105	286	132	187	33	352	1383
Apprch %	22.3	17.1	60.6		9.2	77.2	13.6		18.2	45.1	36.7		37.5	53.1	9.4		
Total %	6.2	4.8	16.9	27.9	2.4	20	3.5	26	3.8	9.3	7.6	20.7	9.5	13.5	2.4	25.5	

	Austin Road Southbound				W McCabe Road Westbound				Austin Road Northbound				W McCabe Road Eastbound				
Start Time	Left	Thru	Right	App. Total	Left	Thru	Right	App. Total	Left	Thru	Right	App. Total	Left	Thru	Right	App. Total	Int. Total
Peak Hour Analysis From 07:00 AM to 08:45 AM - Peak 1 of 1																	
Peak Hour for Entire Intersection Begins at 07:15 AM																	
07:15 AM	**21**	7	28	56	3	32	7	42	1	7	0	8	3	18	0	21	127
07:30 AM	10	13	62	85	7	**82**	2	**91**	12	31	23	66	31	26	5	62	304
07:45 AM	16	**19**	**64**	**99**	**10**	67	**8**	85	**19**	**39**	**37**	**95**	**46**	46	**12**	**104**	**383**
08:00 AM	9	6	51	66	10	35	4	49	13	38	35	86	39	**54**	7	100	301
Total Volume	56	45	205	306	30	216	21	267	45	115	95	255	119	144	24	287	1115
% App. Total	18.3	14.7	67		11.2	80.9	7.9		17.6	45.1	37.3		41.5	50.2	8.4		
PHF	.667	.592	.801	.773	.750	.659	.656	.734	.592	.737	.642	.671	.647	.667	.500	.690	.728

Counts Unlimited, Inc.
PO Box 1178
Corona, CA 92878
(951) 268-6268

County of Imperial
N/S: Austin Road
E/W: W McCabe Road
Weather: Clear

File Name : 08_CIM_Aus_McC AM
Site Code : 05724905
Start Date : 10/23/2024
Page No : 2

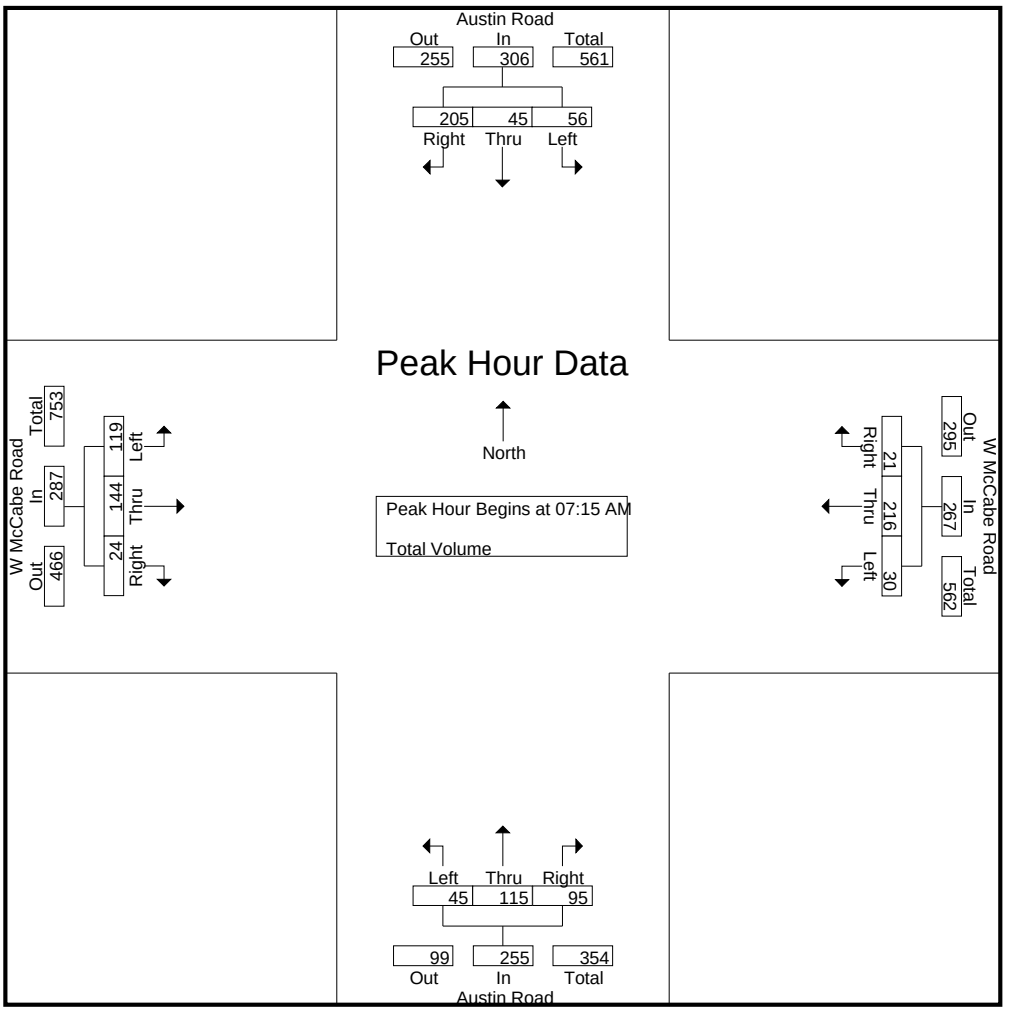

Peak Hour Analysis From 07:00 AM to 08:45 AM - Peak 1 of 1
Peak Hour for Each Approach Begins at:

	07:15 AM				07:15 AM				07:30 AM				07:15 AM			
+0 mins.	**21**	7	28	56	3	32	7	42	12	31	23	66	3	18	0	21
+15 mins.	10	13	62	85	7	**82**	2	**91**	**19**	**39**	**37**	**95**	31	26	5	62
+30 mins.	16	**19**	**64**	**99**	**10**	67	**8**	85	13	38	35	86	**46**	46	**12**	**104**
+45 mins.	9	6	51	66	10	35	4	49	4	4	5	13	39	**54**	7	100
Total Volume	56	45	205	306	30	216	21	267	48	112	100	260	119	144	24	287
% App. Total	18.3	14.7	67		11.2	80.9	7.9		18.5	43.1	38.5		41.5	50.2	8.4	
PHF	.667	.592	.801	.773	.750	.659	.656	.734	.632	.718	.676	.684	.647	.667	.500	.690

Counts Unlimited, Inc.
PO Box 1178
Corona, CA 92878
(951) 268-6268

County of Imperial
N/S: Austin Road
E/W: W McCabe Road
Weather: Clear

File Name : 08_CIM_Aus_McC PM
Site Code : 05724905
Start Date : 10/23/2024
Page No : 1

Groups Printed- Total Volume

	Austin Road Southbound				W McCabe Road Westbound				Austin Road Northbound				W McCabe Road Eastbound				
Start Time	Left	Thru	Right	App. Total	Left	Thru	Right	App. Total	Left	Thru	Right	App. Total	Left	Thru	Right	App. Total	Int. Total
04:00 PM	6	7	11	24	1	29	6	36	4	9	1	14	15	19	2	36	110
04:15 PM	6	11	6	23	6	20	10	36	2	18	20	40	6	15	3	24	123
04:30 PM	8	6	12	26	0	12	10	22	2	2	6	10	7	21	1	29	87
04:45 PM	9	5	3	17	0	6	14	20	1	6	1	8	6	10	2	18	63
Total	29	29	32	90	7	67	40	114	9	35	28	72	34	65	8	107	383
05:00 PM	11	12	3	26	1	12	26	39	2	1	2	5	4	14	3	21	91
05:15 PM	9	4	2	15	0	6	7	13	1	1	2	4	2	13	3	18	50
05:30 PM	12	4	1	17	0	9	17	26	1	2	0	3	1	4	0	5	51
05:45 PM	5	4	3	12	0	8	6	14	1	3	0	4	3	9	1	13	43
Total	37	24	9	70	1	35	56	92	5	7	4	16	10	40	7	57	235
Grand Total	66	53	41	160	8	102	96	206	14	42	32	88	44	105	15	164	618
Apprch %	41.2	33.1	25.6		3.9	49.5	46.6		15.9	47.7	36.4		26.8	64	9.1		
Total %	10.7	8.6	6.6	25.9	1.3	16.5	15.5	33.3	2.3	6.8	5.2	14.2	7.1	17	2.4	26.5	

	Austin Road Southbound				W McCabe Road Westbound				Austin Road Northbound				W McCabe Road Eastbound				
Start Time	Left	Thru	Right	App. Total	Left	Thru	Right	App. Total	Left	Thru	Right	App. Total	Left	Thru	Right	App. Total	Int. Total
Peak Hour Analysis From 04:00 PM to 05:45 PM - Peak 1 of 1																	
Peak Hour for Entire Intersection Begins at 04:00 PM																	
04:00 PM	6	7	11	24	1	**29**	6	**36**	**4**	9	1	14	**15**	19	2	**36**	110
04:15 PM	6	**11**	6	23	**6**	20	10	36	2	**18**	**20**	**40**	6	15	**3**	24	**123**
04:30 PM	8	6	**12**	**26**	0	12	10	22	2	2	6	10	7	**21**	1	29	87
04:45 PM	**9**	5	3	17	0	6	**14**	20	1	6	1	8	6	10	2	18	63
Total Volume	29	29	32	90	7	67	40	114	9	35	28	72	34	65	8	107	383
% App. Total	32.2	32.2	35.6		6.1	58.8	35.1		12.5	48.6	38.9		31.8	60.7	7.5		
PHF	.806	.659	.667	.865	.292	.578	.714	.792	.563	.486	.350	.450	.567	.774	.667	.743	.778

Counts Unlimited, Inc.
PO Box 1178
Corona, CA 92878
(951) 268-6268

County of Imperial
N/S: Austin Road
E/W: W McCabe Road
Weather: Clear

File Name : 08_CIM_Aus_McC PM
Site Code : 05724905
Start Date : 10/23/2024
Page No : 2

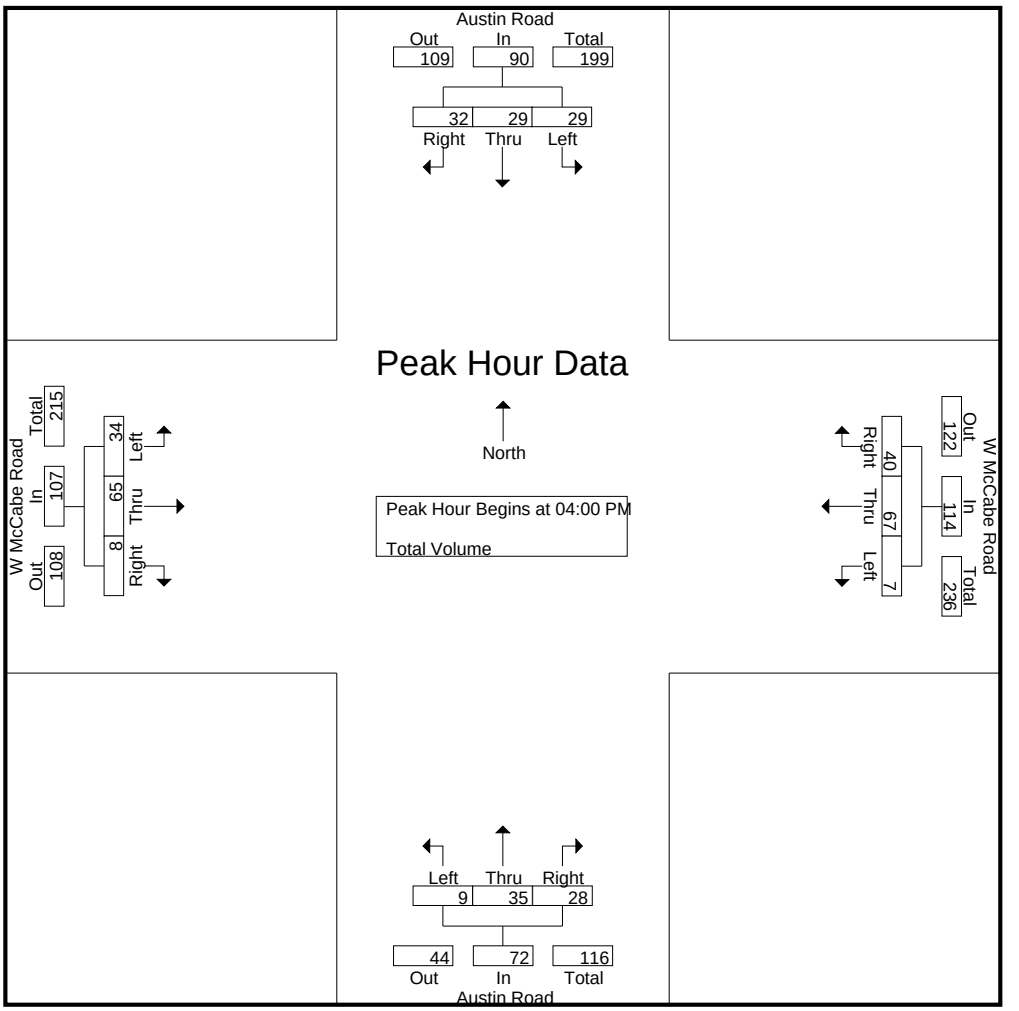

Peak Hour Analysis From 04:00 PM to 05:45 PM - Peak 1 of 1
Peak Hour for Each Approach Begins at:

	04:15 PM				04:15 PM				04:00 PM				04:00 PM			
+0 mins.	6	11	6	23	**6**	**20**	10	36	**4**	9	1	14	**15**	19	2	**36**
+15 mins.	8	6	**12**	**26**	0	12	10	22	2	**18**	**20**	**40**	6	15	**3**	24
+30 mins.	9	5	3	17	0	6	14	20	2	2	6	10	7	**21**	1	29
+45 mins.	**11**	**12**	3	26	1	12	**26**	**39**	1	6	1	8	6	10	2	18
Total Volume	34	34	24	92	7	50	60	117	9	35	28	72	34	65	8	107
% App. Total	37	37	26.1		6	42.7	51.3		12.5	48.6	38.9		31.8	60.7	7.5	
PHF	.773	.708	.500	.885	.292	.625	.577	.750	.563	.486	.350	.450	.567	.774	.667	.743

Counts Unlimited, Inc.
PO Box 1178
Corona, CA 92878
(951) 268-6268

County of Imperial
N/S: S La Brucherie Road
E/W: W McCabe Road
Weather: Clear

File Name : 09_CIM_La B_McC AM
Site Code : 05724905
Start Date : 10/23/2024
Page No : 1

Groups Printed- Total Volume

	S La Brucherie Road Southbound				W McCabe Road Westbound				S La Brucherie Road Northbound				W McCabe Road Eastbound				
Start Time	Left	Thru	Right	App. Total	Left	Thru	Right	App. Total	Left	Thru	Right	App. Total	Left	Thru	Right	App. Total	Int. Total
07:00 AM	10	12	4	26	1	23	16	40	11	24	1	36	4	17	4	25	127
07:15 AM	13	19	9	41	0	31	22	53	4	26	1	31	5	23	10	38	163
07:30 AM	22	27	24	73	0	70	35	105	6	64	2	72	6	52	2	60	310
07:45 AM	48	48	11	107	0	67	23	90	8	54	1	63	13	71	4	88	348
Total	93	106	48	247	1	191	96	288	29	168	5	202	28	163	20	211	948
08:00 AM	34	32	6	72	0	29	16	45	2	17	0	19	24	79	5	108	244
08:15 AM	12	19	4	35	1	14	11	26	2	16	1	19	4	11	3	18	98
08:30 AM	11	13	4	28	0	6	11	17	1	12	1	14	1	10	3	14	73
08:45 AM	13	10	2	25	0	7	16	23	5	24	2	31	9	13	6	28	107
Total	70	74	16	160	1	56	54	111	10	69	4	83	38	113	17	168	522
Grand Total	163	180	64	407	2	247	150	399	39	237	9	285	66	276	37	379	1470
Apprch %	40	44.2	15.7		0.5	61.9	37.6		13.7	83.2	3.2		17.4	72.8	9.8		
Total %	11.1	12.2	4.4	27.7	0.1	16.8	10.2	27.1	2.7	16.1	0.6	19.4	4.5	18.8	2.5	25.8	

	S La Brucherie Road Southbound				W McCabe Road Westbound				S La Brucherie Road Northbound				W McCabe Road Eastbound				
Start Time	Left	Thru	Right	App. Total	Left	Thru	Right	App. Total	Left	Thru	Right	App. Total	Left	Thru	Right	App. Total	Int. Total
Peak Hour Analysis From 07:00 AM to 08:45 AM - Peak 1 of 1																	
Peak Hour for Entire Intersection Begins at 07:15 AM																	
07:15 AM	13	19	9	41	0	31	22	53	4	26	1	31	5	23	**10**	38	163
07:30 AM	22	27	**24**	73	0	**70**	**35**	**105**	6	**64**	**2**	**72**	6	52	2	60	310
07:45 AM	**48**	**48**	11	**107**	0	67	23	90	**8**	54	1	63	13	71	4	88	**348**
08:00 AM	34	32	6	72	0	29	16	45	2	17	0	19	**24**	**79**	5	**108**	244
Total Volume	117	126	50	293	0	197	96	293	20	161	4	185	48	225	21	294	1065
% App. Total	39.9	43	17.1		0	67.2	32.8		10.8	87	2.2		16.3	76.5	7.1		
PHF	.609	.656	.521	.685	.000	.704	.686	.698	.625	.629	.500	.642	.500	.712	.525	.681	.765

Counts Unlimited, Inc.
PO Box 1178
Corona, CA 92878
(951) 268-6268

County of Imperial
N/S: S La Brucherie Road
E/W: W McCabe Road
Weather: Clear

File Name : 09_CIM_La B_McC AM
Site Code : 05724905
Start Date : 10/23/2024
Page No : 2

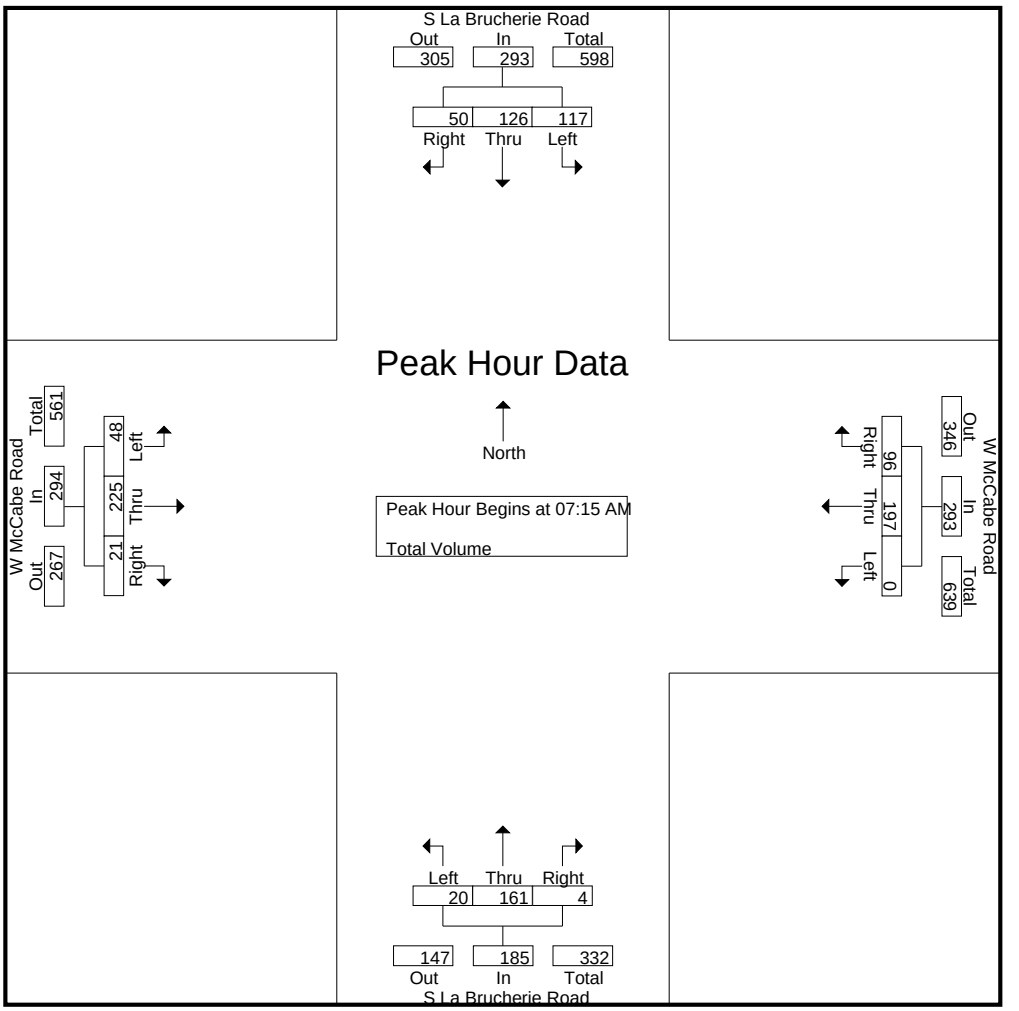

Peak Hour Analysis From 07:00 AM to 08:45 AM - Peak 1 of 1
Peak Hour for Each Approach Begins at:

	07:15 AM				07:15 AM				07:00 AM				07:15 AM			
+0 mins.	13	19	9	41	0	31	22	53	**11**	24	1	36	5	23	**10**	38
+15 mins.	22	27	**24**	73	0	**70**	**35**	**105**	4	26	1	31	6	52	2	60
+30 mins.	**48**	**48**	11	**107**	0	67	23	90	6	**64**	**2**	**72**	13	71	4	88
+45 mins.	34	32	6	72	0	29	16	45	8	54	1	63	**24**	**79**	5	**108**
Total Volume	117	126	50	293	0	197	96	293	29	168	5	202	48	225	21	294
% App. Total	39.9	43	17.1		0	67.2	32.8		14.4	83.2	2.5		16.3	76.5	7.1	
PHF	.609	.656	.521	.685	.000	.704	.686	.698	.659	.656	.625	.701	.500	.712	.525	.681

Counts Unlimited, Inc.
PO Box 1178
Corona, CA 92878
(951) 268-6268

County of Imperial
N/S: S La Brucherie Road
E/W: W McCabe Road
Weather: Clear

File Name : 09_CIM_La B_McC PM
Site Code : 05724905
Start Date : 10/23/2024
Page No : 1

Groups Printed- Total Volume

	S La Brucherie Road Southbound				W McCabe Road Westbound				S La Brucherie Road Northbound				W McCabe Road Eastbound				
Start Time	Left	Thru	Right	App. Total	Left	Thru	Right	App. Total	Left	Thru	Right	App. Total	Left	Thru	Right	App. Total	Int. Total
04:00 PM	21	26	6	53	0	24	16	40	6	19	1	26	1	20	6	27	146
04:15 PM	19	26	7	52	0	22	16	38	6	15	0	21	11	23	6	40	151
04:30 PM	26	15	2	43	0	15	9	24	4	9	0	13	3	23	5	31	111
04:45 PM	13	23	3	39	1	14	14	29	1	19	0	20	3	13	7	23	111
Total	79	90	18	187	1	75	55	131	17	62	1	80	18	79	24	121	519
05:00 PM	17	31	4	52	1	29	40	70	8	5	1	14	1	22	7	30	166
05:15 PM	26	30	1	57	1	7	30	38	3	15	0	18	2	13	6	21	134
05:30 PM	19	24	2	45	0	18	19	37	6	25	0	31	1	13	5	19	132
05:45 PM	12	25	1	38	0	10	31	41	2	22	0	24	0	9	3	12	115
Total	74	110	8	192	2	64	120	186	19	67	1	87	4	57	21	82	547
Grand Total	153	200	26	379	3	139	175	317	36	129	2	167	22	136	45	203	1066
Apprch %	40.4	52.8	6.9		0.9	43.8	55.2		21.6	77.2	1.2		10.8	67	22.2		
Total %	14.4	18.8	2.4	35.6	0.3	13	16.4	29.7	3.4	12.1	0.2	15.7	2.1	12.8	4.2	19	

	S La Brucherie Road Southbound				W McCabe Road Westbound				S La Brucherie Road Northbound				W McCabe Road Eastbound				
Start Time	Left	Thru	Right	App. Total	Left	Thru	Right	App. Total	Left	Thru	Right	App. Total	Left	Thru	Right	App. Total	Int. Total
Peak Hour Analysis From 04:00 PM to 05:45 PM - Peak 1 of 1																	
Peak Hour for Entire Intersection Begins at 05:00 PM																	
05:00 PM	17	**31**	**4**	52	**1**	**29**	**40**	**70**	**8**	5	**1**	14	1	**22**	**7**	**30**	**166**
05:15 PM	**26**	30	1	**57**	1	7	30	38	3	15	0	18	**2**	13	6	21	134
05:30 PM	19	24	2	45	0	18	19	37	6	**25**	0	**31**	1	13	5	19	132
05:45 PM	12	25	1	38	0	10	31	41	2	22	0	24	0	9	3	12	115
Total Volume	74	110	8	192	2	64	120	186	19	67	1	87	4	57	21	82	547
% App. Total	38.5	57.3	4.2		1.1	34.4	64.5		21.8	77	1.1		4.9	69.5	25.6		
PHF	.712	.887	.500	.842	.500	.552	.750	.664	.594	.670	.250	.702	.500	.648	.750	.683	.824

Counts Unlimited, Inc.
PO Box 1178
Corona, CA 92878
(951) 268-6268

County of Imperial
N/S: S La Brucherie Road
E/W: W McCabe Road
Weather: Clear

File Name : 09_CIM_La B_McC PM
Site Code : 05724905
Start Date : 10/23/2024
Page No : 2

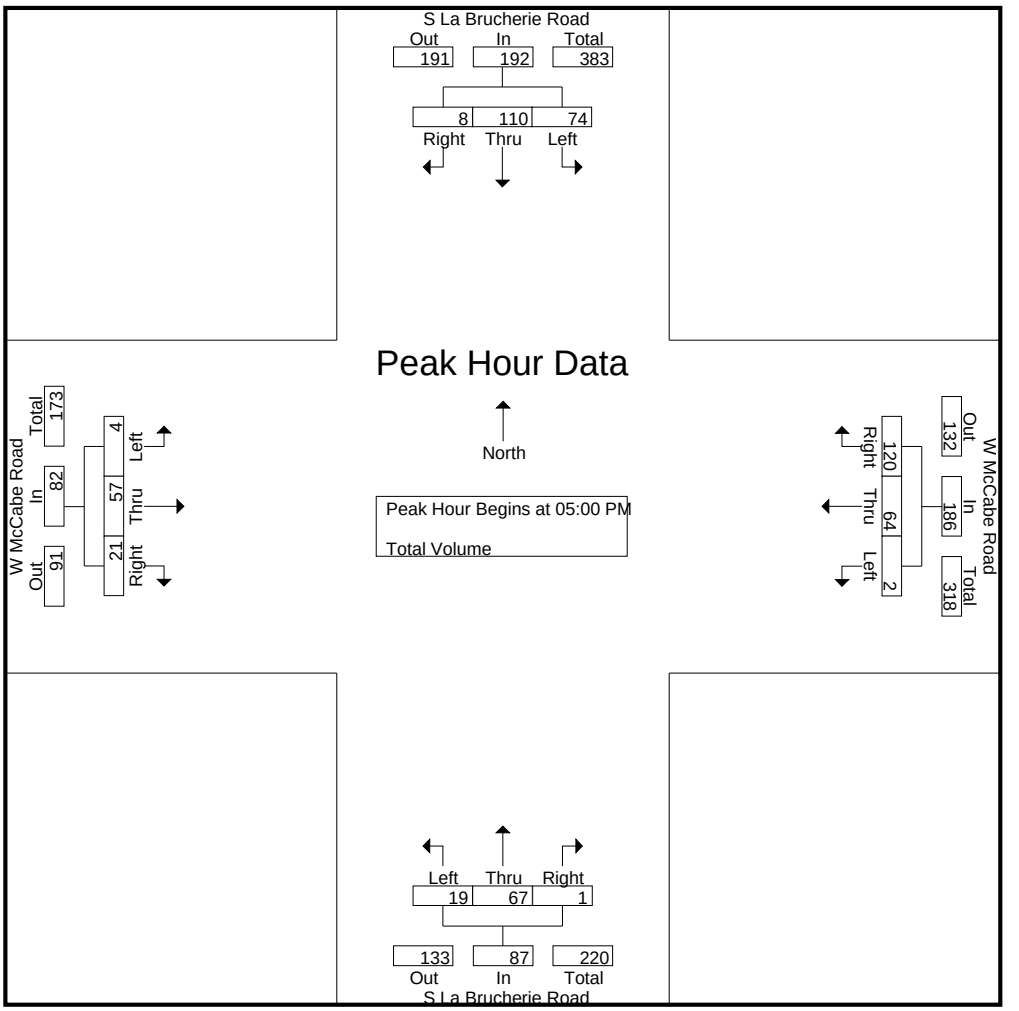

Peak Hour Analysis From 04:00 PM to 05:45 PM - Peak 1 of 1
Peak Hour for Each Approach Begins at:

	04:45 PM				05:00 PM				05:00 PM				04:15 PM			
+0 mins.	13	23	3	39	**1**	**29**	**40**	**70**	**8**	5	**1**	14	**11**	**23**	6	**40**
+15 mins.	17	**31**	**4**	52	1	7	30	38	3	15	0	18	3	23	5	31
+30 mins.	**26**	30	1	**57**	0	18	19	37	6	**25**	0	**31**	3	13	**7**	23
+45 mins.	19	24	2	45	0	10	31	41	2	22	0	24	1	22	7	30
Total Volume	75	108	10	193	2	64	120	186	19	67	1	87	18	81	25	124
% App. Total	38.9	56	5.2		1.1	34.4	64.5		21.8	77	1.1		14.5	65.3	20.2	
PHF	.721	.871	.625	.846	.500	.552	.750	.664	.594	.670	.250	.702	.409	.880	.893	.775

Counts Unlimited, Inc.
PO Box 1178
Corona, CA 92878
(951) 268-6268

City of El Centro
N/S: Dogwood Road
E/W: Correll Road
Weather: Clear

File Name : 10_ECO_Dog_Cor AM
Site Code : 05724905
Start Date : 10/23/2024
Page No : 1

Groups Printed- Total Volume

	Dogwood Road Southbound				Correll Road Westbound				Dogwood Road Northbound				Correll Road Eastbound				
Start Time	Left	Thru	Right	App. Total	Left	Thru	Right	App. Total	Left	Thru	Right	App. Total	Left	Thru	Right	App. Total	Int. Total
07:00 AM	8	23	5	36	7	7	24	38	4	36	2	42	28	4	10	42	158
07:15 AM	15	25	5	45	12	9	49	70	7	66	6	79	26	13	24	63	257
07:30 AM	39	48	10	97	42	10	73	125	8	72	11	91	42	37	27	106	419
07:45 AM	45	35	7	87	67	30	71	168	14	87	8	109	33	34	39	106	470
Total	107	131	27	265	128	56	217	401	33	261	27	321	129	88	100	317	1304
08:00 AM	34	48	13	95	77	23	52	152	9	75	9	93	10	13	10	33	373
08:15 AM	16	40	10	66	13	4	27	44	15	67	6	88	13	5	10	28	226
08:30 AM	9	34	7	50	3	0	20	23	4	58	1	63	4	1	11	16	152
08:45 AM	11	33	9	53	2	4	16	22	6	56	1	63	12	1	8	21	159
Total	70	155	39	264	95	31	115	241	34	256	17	307	39	20	39	98	910
Grand Total	177	286	66	529	223	87	332	642	67	517	44	628	168	108	139	415	2214
Apprch %	33.5	54.1	12.5		34.7	13.6	51.7		10.7	82.3	7		40.5	26	33.5		
Total %	8	12.9	3	23.9	10.1	3.9	15	29	3	23.4	2	28.4	7.6	4.9	6.3	18.7	

	Dogwood Road Southbound				Correll Road Westbound				Dogwood Road Northbound				Correll Road Eastbound				
Start Time	Left	Thru	Right	App. Total	Left	Thru	Right	App. Total	Left	Thru	Right	App. Total	Left	Thru	Right	App. Total	Int. Total
Peak Hour Analysis From 07:00 AM to 08:45 AM - Peak 1 of 1																	
Peak Hour for Entire Intersection Begins at 07:15 AM																	
07:15 AM	15	25	5	45	12	9	49	70	7	66	6	79	26	13	24	63	257
07:30 AM	39	**48**	10	**97**	42	10	**73**	125	8	72	**11**	91	**42**	**37**	27	**106**	419
07:45 AM	**45**	35	7	87	67	**30**	71	**168**	**14**	**87**	8	**109**	33	34	**39**	106	**470**
08:00 AM	34	48	**13**	95	**77**	23	52	152	9	75	9	93	10	13	10	33	373
Total Volume	133	156	35	324	198	72	245	515	38	300	34	372	111	97	100	308	1519
% App. Total	41	48.1	10.8		38.4	14	47.6		10.2	80.6	9.1		36	31.5	32.5		
PHF	.739	.813	.673	.835	.643	.600	.839	.766	.679	.862	.773	.853	.661	.655	.641	.726	.808

Counts Unlimited, Inc.
PO Box 1178
Corona, CA 92878
(951) 268-6268

City of El Centro
N/S: Dogwood Road
E/W: Correll Road
Weather: Clear

File Name : 10_ECO_Dog_Cor AM
Site Code : 05724905
Start Date : 10/23/2024
Page No : 2

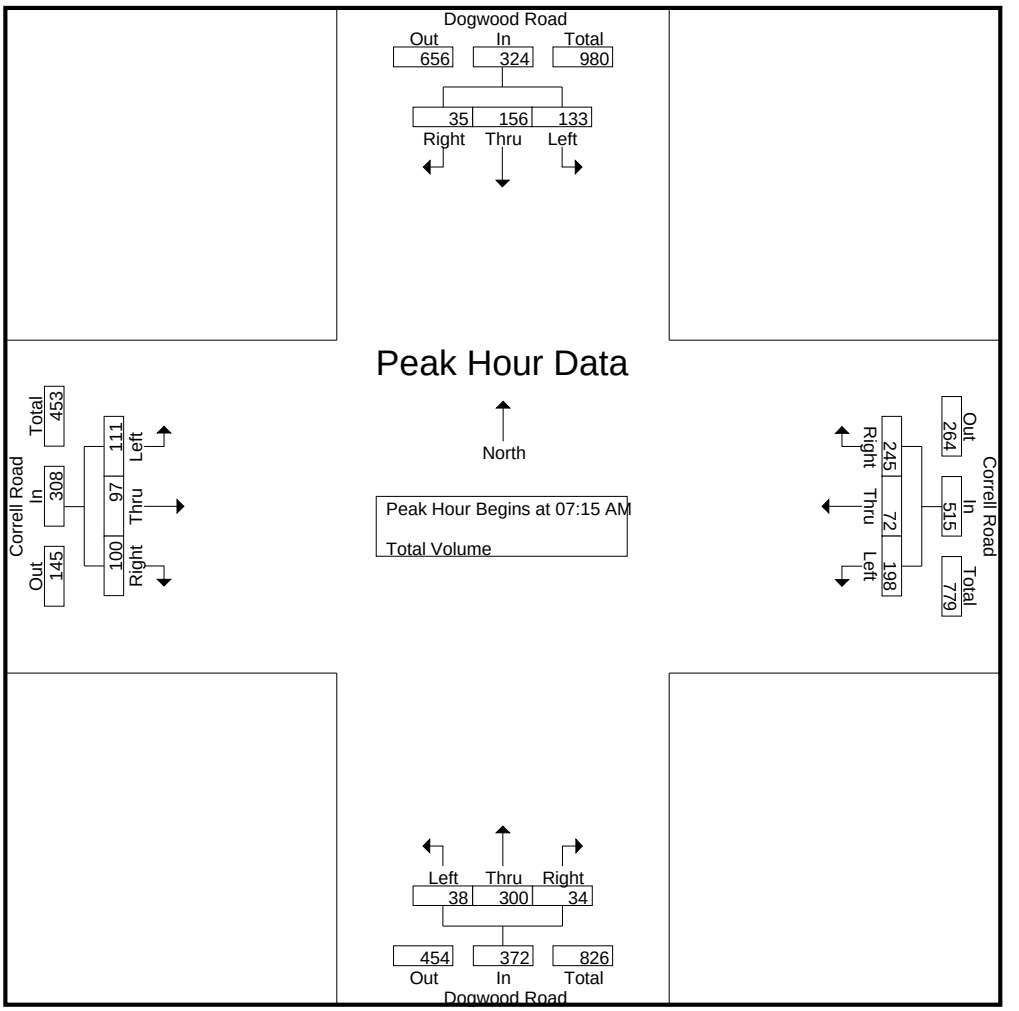

Peak Hour Analysis From 07:00 AM to 08:45 AM - Peak 1 of 1
Peak Hour for Each Approach Begins at:

	07:30 AM				07:15 AM				07:30 AM				07:00 AM			
+0 mins.	39	**48**	10	**97**	12	9	49	70	8	72	**11**	91	28	4	10	42
+15 mins.	**45**	35	7	87	42	10	**73**	125	14	**87**	8	**109**	26	13	24	63
+30 mins.	34	48	**13**	95	67	**30**	71	**168**	9	75	9	93	**42**	**37**	27	**106**
+45 mins.	16	40	10	66	**77**	23	52	152	**15**	67	6	88	33	34	**39**	106
Total Volume	134	171	40	345	198	72	245	515	46	301	34	381	129	88	100	317
% App. Total	38.8	49.6	11.6		38.4	14	47.6		12.1	79	8.9		40.7	27.8	31.5	
PHF	.744	.891	.769	.889	.643	.600	.839	.766	.767	.865	.773	.874	.768	.595	.641	.748

Counts Unlimited, Inc.
PO Box 1178
Corona, CA 92878
(951) 268-6268

City of El Centro
N/S: Dogwood Road
E/W: Correll Road
Weather: Clear

File Name : 10_ECO_Dog_Cor PM
Site Code : 05724905
Start Date : 10/23/2024
Page No : 1

Groups Printed- Total Volume

	Dogwood Road Southbound				Correll Road Westbound				Dogwood Road Northbound				Correll Road Eastbound				
Start Time	Left	Thru	Right	App. Total	Left	Thru	Right	App. Total	Left	Thru	Right	App. Total	Left	Thru	Right	App. Total	Int. Total
04:00 PM	23	79	24	126	4	1	23	28	10	54	2	66	10	1	8	19	239
04:15 PM	21	63	25	109	7	4	16	27	8	51	0	59	8	1	8	17	212
04:30 PM	26	79	18	123	3	3	21	27	12	46	1	59	9	3	7	19	228
04:45 PM	21	74	16	111	7	3	29	39	12	70	2	84	14	5	7	26	260
Total	91	295	83	469	21	11	89	121	42	221	5	268	41	10	30	81	939
05:00 PM	38	70	31	139	4	9	28	41	9	78	6	93	14	3	9	26	299
05:15 PM	29	84	28	141	10	9	14	33	15	65	3	83	16	6	10	32	289
05:30 PM	32	75	31	138	9	9	21	39	14	63	4	81	30	8	8	46	304
05:45 PM	37	67	14	118	25	11	32	68	9	43	7	59	29	14	10	53	298
Total	136	296	104	536	48	38	95	181	47	249	20	316	89	31	37	157	1190
Grand Total	227	591	187	1005	69	49	184	302	89	470	25	584	130	41	67	238	2129
Apprch %	22.6	58.8	18.6		22.8	16.2	60.9		15.2	80.5	4.3		54.6	17.2	28.2		
Total %	10.7	27.8	8.8	47.2	3.2	2.3	8.6	14.2	4.2	22.1	1.2	27.4	6.1	1.9	3.1	11.2	

	Dogwood Road Southbound				Correll Road Westbound				Dogwood Road Northbound				Correll Road Eastbound				
Start Time	Left	Thru	Right	App. Total	Left	Thru	Right	App. Total	Left	Thru	Right	App. Total	Left	Thru	Right	App. Total	Int. Total
Peak Hour Analysis From 04:00 PM to 05:45 PM - Peak 1 of 1																	
Peak Hour for Entire Intersection Begins at 05:00 PM																	
05:00 PM	**38**	70	**31**	139	4	9	28	41	9	**78**	6	**93**	14	3	9	26	299
05:15 PM	29	**84**	28	**141**	10	9	14	33	**15**	65	3	83	16	6	**10**	32	289
05:30 PM	32	75	31	138	9	9	21	39	14	63	4	81	**30**	8	8	46	**304**
05:45 PM	37	67	14	118	**25**	**11**	**32**	**68**	9	43	**7**	59	29	**14**	10	**53**	298
Total Volume	136	296	104	536	48	38	95	181	47	249	20	316	89	31	37	157	1190
% App. Total	25.4	55.2	19.4		26.5	21	52.5		14.9	78.8	6.3		56.7	19.7	23.6		
PHF	.895	.881	.839	.950	.480	.864	.742	.665	.783	.798	.714	.849	.742	.554	.925	.741	.979

Counts Unlimited, Inc.
PO Box 1178
Corona, CA 92878
(951) 268-6268

City of El Centro
N/S: Dogwood Road
E/W: Correll Road
Weather: Clear

File Name : 10_ECO_Dog_Cor PM
Site Code : 05724905
Start Date : 10/23/2024
Page No : 2

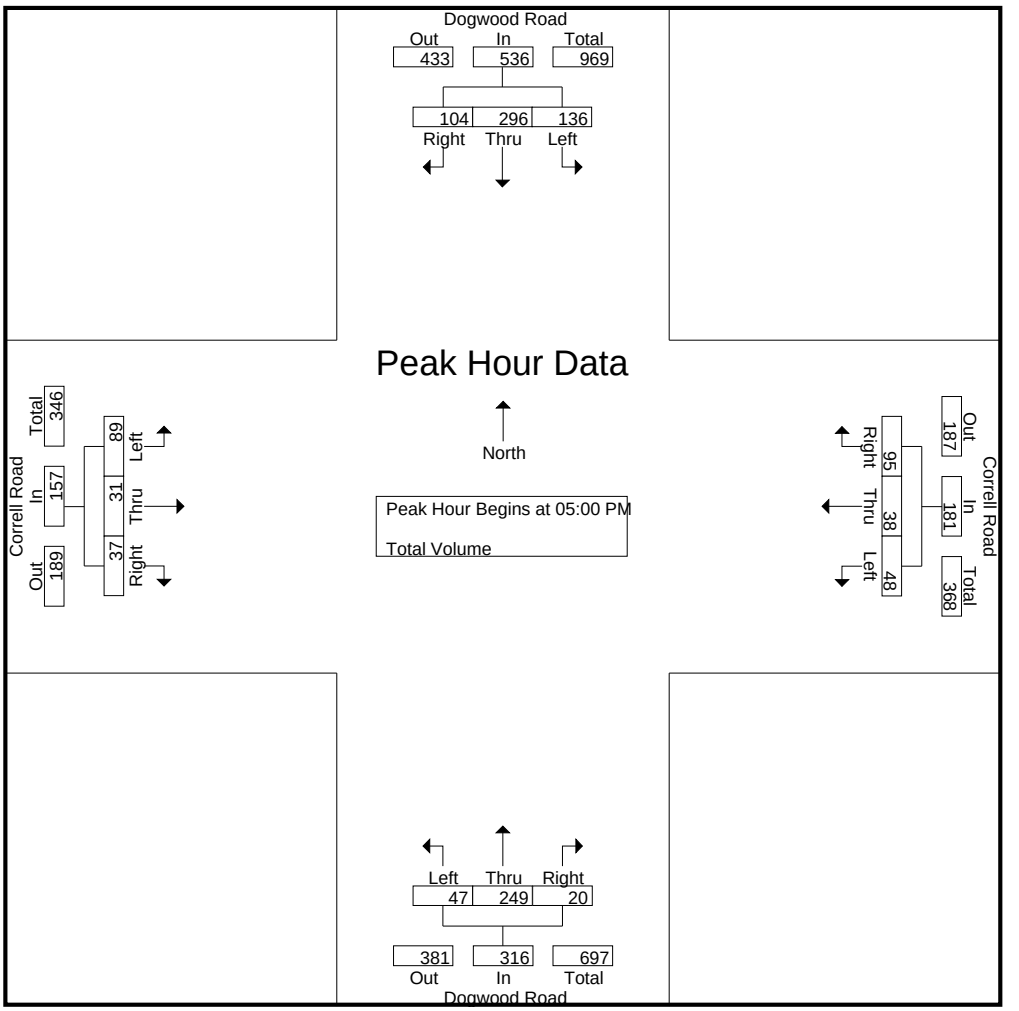

Peak Hour Analysis From 04:00 PM to 05:45 PM - Peak 1 of 1
Peak Hour for Each Approach Begins at:

	05:00 PM				05:00 PM				04:45 PM				05:00 PM			
+0 mins.	**38**	70	**31**	139	4	9	28	41	12	70	2	84	14	3	9	26
+15 mins.	29	**84**	28	**141**	10	9	14	33	9	**78**	**6**	**93**	16	6	**10**	32
+30 mins.	32	75	31	138	9	9	21	39	**15**	65	3	83	**30**	8	8	46
+45 mins.	37	67	14	118	**25**	**11**	**32**	**68**	14	63	4	81	29	**14**	10	**53**
Total Volume	136	296	104	536	48	38	95	181	50	276	15	341	89	31	37	157
% App. Total	25.4	55.2	19.4		26.5	21	52.5		14.7	80.9	4.4		56.7	19.7	23.6	
PHF	.895	.881	.839	.950	.480	.864	.742	.665	.833	.885	.625	.917	.742	.554	.925	.741

Counts Unlimited, Inc.

PO Box 1178
Corona, CA 92878
Phone: (951) 268-6268
email: counts@countsunlimited.com

City of El Centro
Dogwood Road
B/ Danenberg Drive - McCabe Road
24 Hour Directional Volume Count

ECO005
Site Code: 057-24265

Start Time	3/21/24 Thu	Northbound Morning	Northbound Afternoon	Hour Totals Morning	Hour Totals Afternoon	Southbound Morning	Southbound Afternoon	Hour Totals Morning	Hour Totals Afternoon	Combined Totals Morning	Combined Totals Afternoon
12:00		9	111			10	106				
12:15		7	92			10	109				
12:30		8	111			7	94				
12:45		6	95	30	409	7	91	34	400	64	809
01:00		9	**146**			5	108				
01:15		8	**108**			10	106				
01:30		6	**102**			1	129				
01:45		7	**131**	30	487	2	98	18	441	48	928
02:00		4	113			5	80				
02:15		8	103			2	98				
02:30		9	108			5	112				
02:45		10	108	31	432	3	129	15	419	46	851
03:00		1	125			1	108				
03:15		6	121			5	114				
03:30		10	116			4	127				
03:45		16	110	33	472	6	135	16	484	49	956
04:00		20	115			2	127				
04:15		17	107			5	135				
04:30		17	103			8	**145**				
04:45		31	120	85	445	10	**123**	25	530	110	975
05:00		33	120			10	**138**				
05:15		39	121			7	**153**				
05:30		52	112			15	140				
05:45		71	120	195	473	23	126	55	557	250	1030
06:00		32	99			18	103				
06:15		43	109			18	129				
06:30		48	86			33	110				
06:45		66	97	189	391	27	92	96	434	285	825
07:00		59	118			28	98				
07:15		81	111			38	92				
07:30		**132**	130			60	57				
07:45		**121**	90	393	449	72	68	198	315	591	764
08:00		**107**	89			69	78				
08:15		**88**	76			44	57				
08:30		74	69			58	62				
08:45		74	77	343	311	44	42	215	239	558	550
09:00		72	82			49	50				
09:15		59	69			58	39				
09:30		90	51			51	34				
09:45		75	49	296	251	70	35	228	158	524	409
10:00		83	36			74	45				
10:15		76	27			77	29				
10:30		87	45			83	20				
10:45		104	17	350	125	86	21	320	115	670	240
11:00		95	20			**71**	21				
11:15		100	14			**101**	11				
11:30		80	17			**99**	15				
11:45		91	9	366	60	**102**	13	373	60	739	120
Total		2341	4305	2341	4305	1593	4152	1593	4152	3934	8457
Combined Total		6646		6646		5745		5745		12391	
AM Peak	-	07:30	-	-	-	11:00	-	-	-	-	-
Vol.	-	448	-	-	-	373	-	-	-	-	-
P.H.F.		0.848				0.914					
PM Peak	-	-	01:00	-	-	-	04:30	-	-	-	-
Vol.	-	-	487	-	-	-	559	-	-	-	-
P.H.F.			0.834				0.913				
Percentage		35.2%	64.8%			27.7%	72.3%				
ADT/AADT		ADT 12,391		AADT 12,391							

Counts Unlimited, Inc.

PO Box 1178
Corona, CA 92878
Phone: (951) 268-6268
email: counts@countsunlimited.com

City of El Centro
Dogwood Road
B/ Interstate 8 - Danenberg Drive
24 Hour Directional Volume Count

ECO004
Site Code: 057-24265

Start	3/21/24	Northbound		Hour Totals		Southbound		Hour Totals		Combined Totals	
Time	Thu	Morning	Afternoon	Morning	Afternoon	Morning	Afternoon	Morning	Afternoon	Morning	Afternoon
12:00		11	146			14	143				
12:15		11	144			11	154				
12:30		12	156			7	167				
12:45		6	135	40	581	10	137	42	601	82	1182
01:00		9	**179**			4	177				
01:15		7	**145**			13	150				
01:30		6	**147**			2	174				
01:45		7	**186**	29	657	3	156	22	657	51	1314
02:00		3	148			5	130				
02:15		7	154			2	142				
02:30		10	150			5	138				
02:45		9	143	29	595	3	173	15	583	44	1178
03:00		2	156			4	130				
03:15		7	155			5	168				
03:30		10	142			5	197				
03:45		18	147	37	600	11	**216**	25	711	62	1311
04:00		23	157			1	**190**				
04:15		20	152			9	**185**				
04:30		22	160			9	**201**				
04:45		33	155	98	624	12	155	31	731	129	1355
05:00		37	163			16	193				
05:15		49	145			12	203				
05:30		70	157			22	197				
05:45		78	143	234	608	32	166	82	759	316	1367
06:00		43	149			27	140				
06:15		47	143			28	174				
06:30		62	126			45	156				
06:45		77	136	229	554	61	129	161	599	390	1153
07:00		87	156			42	118				
07:15		**108**	133			55	120				
07:30		**162**	145			84	89				
07:45		**145**	127	502	561	121	88	302	415	804	976
08:00		**127**	137			98	79				
08:15		98	114			71	78				
08:30		95	110			94	84				
08:45		93	108	413	469	81	67	344	308	757	777
09:00		80	104			82	56				
09:15		80	83			79	50				
09:30		108	66			72	54				
09:45		97	56	365	309	112	40	345	200	710	509
10:00		114	40			100	36				
10:15		94	30			107	35				
10:30		105	43			107	20				
10:45		139	27	452	140	123	22	437	113	889	253
11:00		119	30			**123**	21				
11:15		121	21			**142**	15				
11:30		124	16			**148**	13				
11:45		120	13	484	80	**165**	13	578	62	1062	142
Total		2912	5778	2912	5778	2384	5739	2384	5739	5296	11517
Combined Total		8690		8690		8123		8123		16813	
AM Peak	-	07:15	-	-	-	11:00	-	-	-	-	-
Vol.	-	542	-	-	-	578	-	-	-	-	-
P.H.F.		0.836				0.876					
PM Peak	-	-	01:00	-	-	-	03:45	-	-	-	-
Vol.	-	-	657	-	-	-	792	-	-	-	-
P.H.F.			0.883				0.917				
Percentage		33.5%	66.5%			29.3%	70.7%				
ADT/AADT		ADT 16,813		AADT 16,813							

Counts Unlimited, Inc.

PO Box 1178
Corona, CA 92878
Phone: (951) 268-6268
email: counts@countsunlimited.com

City of El Centro
Dogwood Road
500' S/ McCabe Road
24 Hour Directional Volume Count

ECO006
Site Code: 057-24265

Start	3/21/24	Northbound		Hour Totals		Southbound		Hour Totals		Combined Totals	
Time	Thu	Morning	Afternoon	Morning	Afternoon	Morning	Afternoon	Morning	Afternoon	Morning	Afternoon
12:00		7	101			15	102				
12:15		5	103			14	107				
12:30		10	102			10	107				
12:45		6	110	28	416	9	97	48	413	76	829
01:00		10	122			6	110				
01:15		9	101			10	121				
01:30		6	88			6	121				
01:45		9	104	34	415	7	106	29	458	63	873
02:00		3	128			8	119				
02:15		5	106			4	139				
02:30		11	95			7	128				
02:45		11	**150**	30	479	7	116	26	502	56	981
03:00		3	**125**			5	132				
03:15		5	**105**			7	139				
03:30		13	**113**			4	179				
03:45		25	117	46	460	5	156	21	606	67	1066
04:00		17	104			4	179				
04:15		20	108			4	165				
04:30		26	100			9	168				
04:45		43	112	106	424	9	134	26	646	132	1070
05:00		40	118			9	**201**				
05:15		61	123			17	**194**				
05:30		67	130			12	**162**				
05:45		87	113	255	484	19	**161**	57	718	312	1202
06:00		46	108			27	145				
06:15		53	94			32	161				
06:30		77	91			31	129				
06:45		79	102	255	395	24	118	114	553	369	948
07:00		101	111			48	118				
07:15		**156**	77			54	111				
07:30		**214**	94			**78**	84				
07:45		**193**	84	664	366	**95**	104	275	417	939	783
08:00		**139**	71			**112**	117				
08:15		110	64			**67**	94				
08:30		83	59			76	90				
08:45		97	67	429	261	40	80	295	381	724	642
09:00		84	71			59	74				
09:15		78	61			52	82				
09:30		104	30			47	82				
09:45		83	36	349	198	64	51	222	289	571	487
10:00		85	25			78	76				
10:15		80	22			62	45				
10:30		100	31			69	40				
10:45		119	10	384	88	82	35	291	196	675	284
11:00		108	17			67	35				
11:15		97	14			86	20				
11:30		95	7			90	23				
11:45		111	13	411	51	87	18	330	96	741	147
Total		2991	4037	2991	4037	1734	5275	1734	5275	4725	9312
Combined Total		7028		7028		7009		7009		14037	
AM Peak	-	07:15	-	-	-	07:30	-	-	-	-	-
Vol.	-	702	-	-	-	352	-	-	-	-	-
P.H.F.		0.820				0.786					
PM Peak	-	-	02:45	-	-	-	05:00	-	-	-	-
Vol.	-	-	493	-	-	-	718	-	-	-	-
P.H.F.			0.822				0.893				
Percentage		42.6%	57.4%			24.7%	75.3%				

ADT/AADT ADT 14,037 AADT 14,037

Counts Unlimited, Inc.

PO Box 1178
Corona, CA 92878
Phone: (951) 268-6268
email: counts@countsunlimited.com

City of El Centro
McCabe Road
B/ Farnsworth Lane - Dogwood Road
24 Hour Directional Volume Count

ECO008
Site Code: 057-24265

Start Time	3/21/24 Thu	Eastbound Morning	Eastbound Afternoon	Hour Totals Morning	Hour Totals Afternoon	Westbound Morning	Westbound Afternoon	Hour Totals Morning	Hour Totals Afternoon	Combined Totals Morning	Combined Totals Afternoon
12:00		4	46			2	37				
12:15		4	48			3	35				
12:30		0	50			4	50				
12:45		1	47	9	191	3	46	12	168	21	359
01:00		2	44			4	44				
01:15		4	52			4	36				
01:30		1	35			0	41				
01:45		3	40	10	171	3	42	11	163	21	334
02:00		4	55			0	45				
02:15		1	56			1	27				
02:30		5	36			2	39				
02:45		6	38	16	185	1	53	4	164	20	349
03:00		0	55			1	46				
03:15		4	56			1	36				
03:30		1	77			4	45				
03:45		0	65	5	253	5	39	11	166	16	419
04:00		3	74			0	32				
04:15		2	61			4	45				
04:30		5	75			3	49				
04:45		2	57	12	267	12	**50**	19	176	31	443
05:00		4	**108**			9	**47**				
05:15		11	**89**			16	**50**				
05:30		7	**68**			15	**50**				
05:45		9	**70**	31	335	17	37	57	184	88	519
06:00		9	61			29	47				
06:15		22	55			13	46				
06:30		14	49			25	32				
06:45		12	52	57	217	30	42	97	167	154	384
07:00		26	58			41	39				
07:15		34	48			**66**	27				
07:30		**54**	43			**85**	26				
07:45		**57**	31	171	180	**78**	37	270	129	441	309
08:00		**64**	38			**49**	34				
08:15		**41**	41			33	29				
08:30		33	31			28	22				
08:45		24	38	162	148	33	24	143	109	305	257
09:00		31	26			29	27				
09:15		17	31			27	27				
09:30		30	32			26	12				
09:45		31	27	109	116	26	8	108	74	217	190
10:00		41	23			32	8				
10:15		33	12			24	9				
10:30		33	18			28	8				
10:45		41	11	148	64	34	2	118	27	266	91
11:00		35	9			28	5				
11:15		36	9			31	5				
11:30		42	8			33	3				
11:45		42	3	155	29	35	6	127	19	282	48
Total		885	2156	885	2156	977	1546	977	1546	1862	3702
Combined Total		3041		3041		2523		2523		5564	
AM Peak	-	07:30	-	-	-	07:15	-	-	-	-	-
Vol.	-	216	-	-	-	278	-	-	-	-	-
P.H.F.		0.844				0.818					
PM Peak	-	-	05:00	-	-	-	04:45	-	-	-	-
Vol.	-	-	335	-	-	-	197	-	-	-	-
P.H.F.			0.775				0.985				
Percentage		29.1%	70.9%			38.7%	61.3%				
ADT/AADT		ADT 5,564		AADT 5,564							

Counts Unlimited, Inc.

PO Box 1178
Corona, CA 92878
Phone: (951) 268-6268
email: counts@countsunlimited.com

City of El Centro
McCabe Road
B/ State Route 86 - Farnsworth Lane
24 Hour Directional Volume Count

ECO007
Site Code: 057-24265

Start Time	3/21/24 Thu	Eastbound Morning	Eastbound Afternoon	Hour Totals Morning	Hour Totals Afternoon	Westbound Morning	Westbound Afternoon	Hour Totals Morning	Hour Totals Afternoon	Combined Totals Morning	Combined Totals Afternoon
12:00		3	47			1	32				
12:15		4	46			3	35				
12:30		1	38			3	38				
12:45		1	48	9	179	2	44	9	149	18	328
01:00		3	46			2	40				
01:15		4	50			5	32				
01:30		0	34			0	41				
01:45		3	36	10	166	2	36	9	149	19	315
02:00		4	57			1	34				
02:15		3	44			1	36				
02:30		3	37			2	36				
02:45		4	34	14	172	0	**43**	4	149	18	321
03:00		1	58			2	**51**				
03:15		2	54			1	**36**				
03:30		1	75			5	**39**				
03:45		0	58	4	245	5	38	13	164	17	409
04:00		3	71			0	25				
04:15		2	65			4	40				
04:30		4	59			4	42				
04:45		4	60	13	255	9	40	17	147	30	402
05:00		2	**94**			11	39				
05:15		8	**76**			12	43				
05:30		6	**66**			14	44				
05:45		6	**62**	22	298	19	31	56	157	78	455
06:00		9	51			29	41				
06:15		17	50			8	33				
06:30		10	41			25	33				
06:45		10	41	46	183	20	28	82	135	128	318
07:00		24	55			42	36				
07:15		25	39			**61**	24				
07:30		**52**	43			**107**	22				
07:45		**49**	29	150	166	**72**	28	282	110	432	276
08:00		**64**	37			**46**	26				
08:15		**36**	36			31	22				
08:30		27	29			22	19				
08:45		17	36	144	138	29	17	128	84	272	222
09:00		33	20			26	26				
09:15		14	26			24	21				
09:30		27	29			24	9				
09:45		28	21	102	96	26	4	100	60	202	156
10:00		39	22			27	3				
10:15		23	15			19	6				
10:30		30	16			29	4				
10:45		38	9	130	62	24	1	99	14	229	76
11:00		24	8			26	4				
11:15		32	8			26	3				
11:30		43	7			23	1				
11:45		41	2	140	25	34	5	109	13	249	38
Total		784	1985	784	1985	908	1331	908	1331	1692	3316
Combined Total		2769		2769		2239		2239		5008	
AM Peak	-	07:30	-	-	-	07:15	-	-	-	-	-
Vol.	-	201	-	-	-	286	-	-	-	-	-
P.H.F.		0.785				0.668					
PM Peak	-	-	05:00	-	-	-	02:45	-	-	-	-
Vol.	-	-	298	-	-	-	169	-	-	-	-
P.H.F.			0.793				0.828				
Percentage		28.3%	71.7%			40.6%	59.4%				
ADT/AADT		ADT 5,008		AADT 5,008							

Counts Unlimited, Inc.

PO Box 1178
Corona, CA 92878
Phone: (951) 268-6268
email: counts@countsunlimited.com

City of El Centro
State Route 86
B/ Danenberg Drive - McCabe Road
24 Hour Directional Volume Count

ECO002
Site Code: 057-24265

Start Time	3/21/24 Thu	Northbound Morning	Northbound Afternoon	Hour Totals Morning	Hour Totals Afternoon	Southbound Morning	Southbound Afternoon	Hour Totals Morning	Hour Totals Afternoon	Combined Totals Morning	Combined Totals Afternoon
12:00		6	67			10	108				
12:15		8	72			12	87				
12:30		7	70			6	94				
12:45		7	67	28	276	3	68	31	357	59	633
01:00		1	84			3	95				
01:15		4	61			4	85				
01:30		3	71			6	86				
01:45		2	62	10	278	5	77	18	343	28	621
02:00		3	80			5	114				
02:15		5	67			6	104				
02:30		5	55			4	119				
02:45		3	76	16	278	4	92	19	429	35	707
03:00		6	72			3	89				
03:15		7	67			9	116				
03:30		6	**72**			4	109				
03:45		9	**94**	28	305	3	105	19	419	47	724
04:00		7	**64**			4	133				
04:15		19	**79**			3	113				
04:30		13	68			9	116				
04:45		20	82	59	293	14	**118**	30	480	89	773
05:00		29	75			6	**163**				
05:15		46	76			22	**134**				
05:30		46	69			20	**118**				
05:45		37	80	158	300	24	118	72	533	230	833
06:00		37	51			24	109				
06:15		52	58			30	99				
06:30		54	63			37	82				
06:45		64	56	207	228	33	94	124	384	331	612
07:00		51	61			29	87				
07:15		**85**	50			52	69				
07:30		**125**	52			51	69				
07:45		**143**	51	404	214	51	80	183	305	587	519
08:00		**100**	44			56	87				
08:15		76	42			65	76				
08:30		78	34			64	67				
08:45		78	28	332	148	48	62	233	292	565	440
09:00		65	44			71	57				
09:15		64	41			44	44				
09:30		77	35			57	57				
09:45		62	21	268	141	76	52	248	210	516	351
10:00		53	13			79	45				
10:15		71	16			72	29				
10:30		72	23			62	39				
10:45		69	15	265	67	65	22	278	135	543	202
11:00		79	9			**67**	30				
11:15		55	8			**74**	17				
11:30		81	9			**102**	12				
11:45		42	9	257	35	**80**	13	323	72	580	107
Total		2032	2563	2032	2563	1578	3959	1578	3959	3610	6522
Combined Total		4595		4595		5537		5537		10132	
AM Peak	-	07:15	-	-	-	11:00	-	-	-	-	-
Vol.	-	453	-	-	-	323	-	-	-	-	-
P.H.F.		0.792				0.792					
PM Peak	-	-	03:30	-	-	-	04:45	-	-	-	-
Vol.	-	-	309	-	-	-	533	-	-	-	-
P.H.F.			0.822				0.817				
Percentage		44.2%	55.8%			28.5%	71.5%				
ADT/AADT		ADT 10,132		AADT 10,132							

Counts Unlimited, Inc.

PO Box 1178
Corona, CA 92878
Phone: (951) 268-6268
email: counts@countsunlimited.com

City of El Centro
State Route 86
B/ McCabe Road - Heber Road
24 Hour Directional Volume Count

ECO003
Site Code: 057-24265

Start Time	3/21/24 Thu	Northbound Morning	Northbound Afternoon	Hour Totals Morning	Hour Totals Afternoon	Southbound Morning	Southbound Afternoon	Hour Totals Morning	Hour Totals Afternoon	Combined Totals Morning	Combined Totals Afternoon
12:00		6	27			4	62				
12:15		8	49			11	49				
12:30		2	28			2	48				
12:45		5	34	21	138	3	39	20	198	41	336
01:00		2	44			0	47				
01:15		2	28			2	56				
01:30		1	38			5	47				
01:45		1	31	6	141	2	40	9	190	15	331
02:00		2	32			4	67				
02:15		5	40			4	60				
02:30		4	36			3	74				
02:45		3	35	14	143	1	59	12	260	26	403
03:00		7	37			5	58				
03:15		4	38			5	64				
03:30		4	**52**			7	51				
03:45		7	**50**	22	177	4	56	21	229	43	406
04:00		6	**39**			2	79				
04:15		14	**41**			2	62				
04:30		9	35			7	**78**				
04:45		11	28	40	143	6	**57**	17	276	57	419
05:00		17	26			6	**85**				
05:15		19	37			13	**91**				
05:30		24	38			16	60				
05:45		12	27	72	128	18	63	53	299	125	427
06:00		17	21			14	53				
06:15		40	23			21	51				
06:30		26	21			28	32				
06:45		38	30	121	95	23	40	86	176	207	271
07:00		21	28			15	36				
07:15		31	15			40	30				
07:30		38	20			38	31				
07:45		**66**	18	156	81	33	29	126	126	282	207
08:00		**47**	18			33	34				
08:15		**44**	17			30	38				
08:30		**52**	17			36	32				
08:45		37	19	180	71	35	30	134	134	314	205
09:00		33	20			48	27				
09:15		34	18			32	19				
09:30		38	16			34	26				
09:45		32	12	137	66	40	22	154	94	291	160
10:00		33	9			49	17				
10:15		34	10			33	10				
10:30		39	16			35	15				
10:45		38	11	144	46	38	15	155	57	299	103
11:00		36	8			**44**	17				
11:15		26	2			**35**	9				
11:30		34	8			**71**	7				
11:45		35	8	131	26	**52**	6	202	39	333	65
Total		1044	1255	1044	1255	989	2078	989	2078	2033	3333
Combined Total		2299		2299		3067		3067		5366	
AM Peak	-	07:45	-	-	-	11:00	-	-	-	-	-
Vol.	-	209	-	-	-	202	-	-	-	-	-
P.H.F.		0.792				0.711					
PM Peak	-	-	03:30	-	-	-	04:30	-	-	-	-
Vol.	-	-	182	-	-	-	311	-	-	-	-
P.H.F.			0.875				0.854				
Percentage		45.4%	54.6%			32.2%	67.8%				
ADT/AADT		ADT 5,366		AADT 5,366							

Counts Unlimited, Inc.

PO Box 1178
Corona, CA 92878
Phone: (951) 268-6268
email: counts@countsunlimited.com

City of El Centro
State Route 86
B/ Wake Avenue - Danenberg Drive
24 Hour Directional Volume Count

ECO001
Site Code: 057-24265

Start Time	3/21/24 Thu	Northbound Morning	Northbound Afternoon	Hour Totals Morning	Hour Totals Afternoon	Southbound Morning	Southbound Afternoon	Hour Totals Morning	Hour Totals Afternoon	Combined Totals Morning	Combined Totals Afternoon
12:00		5	107			11	152				
12:15		9	103			12	133				
12:30		7	93			8	111				
12:45		7	100	28	403	3	102	34	498	62	901
01:00		1	133			4	119				
01:15		6	106			4	118				
01:30		3	96			6	120				
01:45		3	96	13	431	6	114	20	471	33	902
02:00		3	109			5	131				
02:15		6	97			6	139				
02:30		5	80			4	148				
02:45		3	105	17	391	4	123	19	541	36	932
03:00		6	87			3	109				
03:15		7	103			9	144				
03:30		6	102			4	153				
03:45		10	135	29	427	5	144	21	550	50	977
04:00		9	99			4	164				
04:15		19	107			3	134				
04:30		14	87			9	**149**				
04:45		23	97	65	390	14	**154**	30	601	95	991
05:00		32	**158**			10	**155**				
05:15		48	**116**			23	**166**				
05:30		48	**88**			26	143				
05:45		42	**101**	170	463	27	140	86	604	256	1067
06:00		40	75			25	150				
06:15		53	87			31	123				
06:30		62	90			38	104				
06:45		61	73	216	325	38	119	132	496	348	821
07:00		50	100			31	125				
07:15		**91**	77			56	96				
07:30		**137**	79			58	89				
07:45		**135**	81	413	337	74	97	219	407	632	744
08:00		**99**	69			69	109				
08:15		88	77			83	89				
08:30		95	54			71	80				
08:45		89	41	371	241	65	63	288	341	659	582
09:00		92	58			74	60				
09:15		72	64			63	59				
09:30		99	51			74	66				
09:45		82	32	345	205	100	63	311	248	656	453
10:00		63	21			108	48				
10:15		85	28			94	32				
10:30		88	31			96	42				
10:45		91	20	327	100	98	25	396	147	723	247
11:00		100	10			**98**	36				
11:15		84	11			**111**	22				
11:30		104	14			**141**	16				
11:45		77	11	365	46	**120**	14	470	88	835	134
Total		2359	3759	2359	3759	2026	4992	2026	4992	4385	8751
Combined Total		6118		6118		7018		7018		13136	
AM Peak	-	07:15	-	-	-	11:00	-	-	-	-	-
Vol.	-	462	-	-	-	470	-	-	-	-	-
P.H.F.		0.843				0.833					
PM Peak	-	-	05:00	-	-	-	04:30	-	-	-	-
Vol.	-	-	463	-	-	-	624	-	-	-	-
P.H.F.			0.733				0.940				
Percentage		38.6%	61.4%			28.9%	71.1%				
ADT/AADT		ADT 13,136		AADT 13,136							

Counts Unlimited, Inc

PO Box 1178
Corona, CA 92878
Phone: 951-268-6268
email: counts@countsunlimited.com

County of Imperial
Clark Road
B/ Danenberg Drive - McCabe Road
24 Hour Directional Volume Count

CIM002
Site Code: 057-24905

Start Time	10/23/24 Wed	Northbound Morning	Northbound Afternoon	Hour Totals Morning	Hour Totals Afternoon	Southbound Morning	Southbound Afternoon	Hour Totals Morning	Hour Totals Afternoon	Combined Totals Morning	Combined Totals Afternoon
12:00		3	116			11	109				
12:15		6	82			8	97				
12:30		4	69			7	91				
12:45		2	104	15	371	5	77	31	374	46	745
01:00		2	78			4	97				
01:15		2	72			6	95				
01:30		2	68			6	82				
01:45		6	73	12	291	0	108	16	382	28	673
02:00		3	79			1	101				
02:15		4	74			2	106				
02:30		3	81			2	105				
02:45		3	**135**	13	369	6	101	11	413	24	782
03:00		7	**92**			2	129				
03:15		1	**108**			5	170				
03:30		6	**103**			2	140				
03:45		5	86	19	389	4	110	13	549	32	938
04:00		7	67			1	137				
04:15		5	73			1	127				
04:30		11	94			0	122				
04:45		18	107	41	341	7	127	9	513	50	854
05:00		20	125			10	**200**				
05:15		27	95			10	**121**				
05:30		38	86			11	**149**				
05:45		37	119	122	425	27	**129**	58	599	180	1024
06:00		38	68			19	125				
06:15		45	74			22	110				
06:30		59	79			47	87				
06:45		93	56	235	277	42	83	130	405	365	682
07:00		80	58			49	109				
07:15		**172**	43			66	69				
07:30		**254**	56			**125**	73				
07:45		**163**	63	669	220	**155**	68	395	319	1064	539
08:00		**125**	33			**103**	81				
08:15		112	43			**69**	58				
08:30		78	39			55	68				
08:45		82	35	397	150	58	75	285	282	682	432
09:00		67	33			43	54				
09:15		60	32			46	48				
09:30		68	32			46	30				
09:45		66	30	261	127	53	33	188	165	449	292
10:00		66	29			50	49				
10:15		73	27			59	49				
10:30		74	16			84	32				
10:45		67	16	280	88	71	18	264	148	544	236
11:00		67	12			69	12				
11:15		64	11			56	17				
11:30		75	10			88	15				
11:45		84	9	290	42	75	11	288	55	578	97
Total		2354	3090	2354	3090	1688	4204	1688	4204	4042	7294
Combined Total		5444		5444		5892		5892		11336	
AM Peak	-	07:15	-	-	-	07:30	-	-	-	-	-
Vol.	-	714	-	-	-	452	-	-	-	-	-
P.H.F.		0.703				0.729					
PM Peak	-	-	02:45	-	-	-	05:00	-	-	-	-
Vol.	-	-	438	-	-	-	599	-	-	-	-
P.H.F.			0.811				0.749				
Percentage		43.2%	56.8%			28.6%	71.4%				
ADT/AADT		ADT 11,336		AADT 11,336							

Counts Unlimited, Inc

PO Box 1178
Corona, CA 92878
Phone: 951-268-6268
email: counts@countsunlimited.com

County of Imperial
Imperial Avenue
B/ Interstate 8 - Danenberg Drive
24 Hour Directional Volume Count

CIM001
Site Code: 057-24905

Start Time	10/23/24 Wed	Northbound Morning	Northbound Afternoon	Hour Totals Morning	Hour Totals Afternoon	Southbound Morning	Southbound Afternoon	Hour Totals Morning	Hour Totals Afternoon	Combined Totals Morning	Combined Totals Afternoon
12:00		2	45			6	61				
12:15		4	24			15	49				
12:30		1	37			2	60				
12:45		1	36	8	142	3	38	26	208	34	350
01:00		1	24			1	32				
01:15		2	28			2	42				
01:30		2	31			2	36				
01:45		0	26	5	109	0	50	5	160	10	269
02:00		0	31			1	41				
02:15		3	34			2	57				
02:30		1	32			1	66				
02:45		1	36	5	133	2	47	6	211	11	344
03:00		2	44			0	56				
03:15		0	30			3	**61**				
03:30		1	27			1	**64**				
03:45		3	37	6	138	2	**61**	6	242	12	380
04:00		0	31			0	**60**				
04:15		5	25			0	61				
04:30		0	41			1	50				
04:45		6	35	11	132	4	53	5	224	16	356
05:00		13	**36**			6	64				
05:15		12	**38**			8	57				
05:30		22	**37**			7	61				
05:45		13	**40**	60	151	9	56	30	238	90	389
06:00		7	23			10	49				
06:15		11	25			10	59				
06:30		22	34			14	50				
06:45		28	18	68	100	11	37	45	195	113	295
07:00		**40**	23			19	52				
07:15		**45**	17			27	38				
07:30		**55**	31			33	32				
07:45		**70**	23	210	94	**96**	44	175	166	385	260
08:00		35	13			**53**	39				
08:15		21	12			**33**	26				
08:30		26	18			**35**	35				
08:45		30	9	112	52	34	31	155	131	267	183
09:00		19	19			22	36				
09:15		16	15			18	34				
09:30		26	10			19	25				
09:45		30	8	91	52	27	23	86	118	177	170
10:00		27	12			27	18				
10:15		25	10			36	37				
10:30		21	10			29	15				
10:45		23	7	96	39	52	11	144	81	240	120
11:00		33	7			41	12				
11:15		27	6			24	6				
11:30		36	3			40	5				
11:45		29	3	125	19	42	9	147	32	272	51
Total		797	1161	797	1161	830	2006	830	2006	1627	3167
Combined Total		1958		1958		2836		2836		4794	
AM Peak	-	07:00	-	-	-	07:45	-	-	-	-	-
Vol.	-	210	-	-	-	217	-	-	-	-	-
P.H.F.		0.750				0.565					
PM Peak	-	-	05:00	-	-	-	03:15	-	-	-	-
Vol.	-	-	151	-	-	-	246	-	-	-	-
P.H.F.			0.944				0.961				
Percentage		40.7%	59.3%			29.3%	70.7%				
ADT/AADT		ADT 4,794		AADT 4,794							

Counts Unlimited, Inc

PO Box 1178
Corona, CA 92878
Phone: 951-268-6268
email: counts@countsunlimited.com

County of Imperial
McCabe Road
B/ Clark Road - State Route 86
24 Hour Directional Volume Count

CIM005
Site Code: 057-24905

Start Time	10/23/24 Wed	Eastbound Morning	Eastbound Afternoon	Hour Totals Morning	Hour Totals Afternoon	Westbound Morning	Westbound Afternoon	Hour Totals Morning	Hour Totals Afternoon	Combined Totals Morning	Combined Totals Afternoon
12:00		6	32			6	34				
12:15		3	33			7	45				
12:30		0	44			4	27				
12:45		2	41	11	150	3	38	20	144	31	294
01:00		1	49			4	37				
01:15		0	54			0	32				
01:30		4	45			8	42				
01:45		0	38	5	186	2	26	14	137	19	323
02:00		4	44			1	30				
02:15		0	46			2	44				
02:30		0	37			0	43				
02:45		4	52	8	179	1	**50**	4	167	12	346
03:00		1	50			1	**49**				
03:15		0	52			1	**48**				
03:30		2	50			3	**44**				
03:45		1	45	4	197	2	45	7	186	11	383
04:00		1	48			5	47				
04:15		1	49			4	30				
04:30		1	**52**			7	29				
04:45		1	**47**	4	196	6	36	22	142	26	338
05:00		3	**77**			7	68				
05:15		4	**63**			7	32				
05:30		7	50			11	29				
05:45		18	48	32	238	17	34	42	163	74	401
06:00		6	35			25	31				
06:15		13	28			12	19				
06:30		22	25			21	24				
06:45		36	24	77	112	34	18	92	92	169	204
07:00		24	27			28	22				
07:15		29	17			27	10				
07:30		**41**	13			**61**	8				
07:45		**56**	20	150	77	**56**	22	172	62	322	139
08:00		**60**	12			**33**	24				
08:15		**32**	18			**42**	17				
08:30		29	12			33	18				
08:45		21	9	142	51	30	13	138	72	280	123
09:00		24	8			36	12				
09:15		20	12			30	16				
09:30		31	9			22	15				
09:45		36	9	111	38	34	3	122	46	233	84
10:00		21	9			28	11				
10:15		24	12			37	11				
10:30		28	7			31	15				
10:45		25	6	98	34	25	14	121	51	219	85
11:00		30	4			38	6				
11:15		30	2			27	5				
11:30		23	8			32	6				
11:45		27	5	110	19	41	2	138	19	248	38
Total		752	1477	752	1477	892	1281	892	1281	1644	2758
Combined Total		2229		2229		2173		2173		4402	
AM Peak	-	07:30	-	-	-	07:30	-	-	-	-	-
Vol.	-	189	-	-	-	192	-	-	-	-	-
P.H.F.		0.788				0.787					
PM Peak	-	-	04:30	-	-	-	02:45	-	-	-	-
Vol.	-	-	239	-	-	-	191	-	-	-	-
P.H.F.			0.776				0.955				
Percentage		33.7%	66.3%			41.0%	59.0%				
ADT/AADT		ADT 4,402		AADT 4,402							

Counts Unlimited, Inc

PO Box 1178
Corona, CA 92878
Phone: 951-268-6268
email: counts@countsunlimited.com

County of Imperial
McCabe Road
B/ Imperial Avenue - Clark Road
24 Hour Directional Volume Count

CIM004
Site Code: 057-24905

Start Time	10/23/24 Wed	Eastbound Morning	Eastbound Afternoon	Hour Totals Morning	Hour Totals Afternoon	Westbound Morning	Westbound Afternoon	Hour Totals Morning	Hour Totals Afternoon	Combined Totals Morning	Combined Totals Afternoon
12:00		5	52			8	53				
12:15		6	54			8	53				
12:30		3	54			5	48				
12:45		4	56	18	216	3	44	24	198	42	414
01:00		2	68			5	46				
01:15		1	71			1	45				
01:30		9	83			9	45				
01:45		1	52	13	274	2	36	17	172	30	446
02:00		2	70			1	56				
02:15		1	71			1	56				
02:30		4	73			2	49				
02:45		4	85	11	299	1	**94**	5	255	16	554
03:00		2	72			1	**68**				
03:15		2	90			1	**61**				
03:30		3	84			2	**67**				
03:45		4	62	11	308	1	63	5	259	16	567
04:00		1	72			6	68				
04:15		2	65			4	58				
04:30		2	**83**			4	61				
04:45		5	**61**	10	281	7	72	21	259	31	540
05:00		5	**119**			10	90				
05:15		4	**95**			8	49				
05:30		9	82			10	52				
05:45		25	60	43	356	19	50	47	241	90	597
06:00		19	54			22	38				
06:15		20	48			14	32				
06:30		33	50			23	41				
06:45		36	48	108	200	47	27	106	138	214	338
07:00		38	32			48	37				
07:15		**64**	36			47	18				
07:30		**102**	31			**100**	15				
07:45		**116**	36	320	135	**112**	31	307	101	627	236
08:00		**91**	17			**89**	32				
08:15		37	29			**59**	20				
08:30		38	21			45	28				
08:45		33	22	199	89	46	18	239	98	438	187
09:00		29	13			48	24				
09:15		27	30			41	19				
09:30		40	15			30	16				
09:45		43	16	139	74	47	5	166	64	305	138
10:00		35	13			36	11				
10:15		36	17			47	17				
10:30		37	8			40	21				
10:45		40	9	148	47	30	15	153	64	301	111
11:00		38	3			37	11				
11:15		36	1			20	6				
11:30		48	12			38	7				
11:45		46	7	168	23	55	5	150	29	318	52
Total		1188	2302	1188	2302	1240	1878	1240	1878	2428	4180
Combined Total		3490		3490		3118		3118		6608	
AM Peak	-	07:15	-	-	-	07:30	-	-	-	-	-
Vol.	-	373	-	-	-	360	-	-	-	-	-
P.H.F.		0.804				0.804					
PM Peak	-	-	04:30	-	-	-	02:45	-	-	-	-
Vol.	-	-	358	-	-	-	290	-	-	-	-
P.H.F.			0.752				0.771				
Percentage		34.0%	66.0%			39.8%	60.2%				
ADT/AADT		ADT 6,608		AADT 6,608							

Counts Unlimited, Inc

PO Box 1178
Corona, CA 92878
Phone: 951-268-6268
email: counts@countsunlimited.com

County of Imperial
State Route 86
B/ Aurora Drive - Interstate 8
24 Hour Directional Volume Count

CIM003
Site Code: 057-24905

Start Time	10/23/24 Wed	Northbound Morning	Northbound Afternoon	Hour Totals Morning	Hour Totals Afternoon	Southbound Morning	Southbound Afternoon	Hour Totals Morning	Hour Totals Afternoon	Combined Totals Morning	Combined Totals Afternoon
12:00		23	**192**			15	235				
12:15		17	**191**			13	228				
12:30		15	**182**			17	199				
12:45		13	**169**	68	734	9	216	54	878	122	1612
01:00		12	169			7	205				
01:15		12	181			9	192				
01:30		12	165			14	204				
01:45		10	194	46	709	13	213	43	814	89	1523
02:00		5	160			7	207				
02:15		5	122			12	194				
02:30		6	171			10	207				
02:45		5	156	21	609	14	205	43	813	64	1422
03:00		5	180			16	199				
03:15		6	151			25	221				
03:30		16	185			21	220				
03:45		9	175	36	691	24	170	86	810	122	1501
04:00		16	149			22	234				
04:15		10	151			20	212				
04:30		30	147			24	177				
04:45		24	173	80	620	29	197	95	820	175	1440
05:00		43	180			43	**264**				
05:15		60	179			68	**240**				
05:30		58	158			77	**227**				
05:45		60	179	221	696	66	**216**	254	947	475	1643
06:00		41	162			66	195				
06:15		65	156			52	198				
06:30		78	158			92	167				
06:45		106	130	290	606	121	168	331	728	621	1334
07:00		101	147			90	158				
07:15		138	115			138	124				
07:30		142	113			148	106				
07:45		193	105	574	480	208	129	584	517	1158	997
08:00		178	141			189	117				
08:15		137	98			146	133				
08:30		146	76			157	123				
08:45		171	73	632	388	170	117	662	490	1294	878
09:00		140	72			160	104				
09:15		138	65			163	99				
09:30		152	60			157	67				
09:45		169	48	599	245	157	67	637	337	1236	582
10:00		156	57			158	60				
10:15		163	44			187	73				
10:30		162	42			168	50				
10:45		**175**	24	656	167	170	34	683	217	1339	384
11:00		**163**	47			**175**	32				
11:15		**169**	25			**190**	19				
11:30		**183**	27			**217**	21				
11:45		153	16	668	115	**184**	24	766	96	1434	211
Total		3891	6060	3891	6060	4238	7467	4238	7467	8129	13527
Combined Total		9951		9951		11705		11705		21656	
AM Peak	-	10:45	-	-	-	11:00	-	-	-	-	-
Vol.	-	690	-	-	-	766	-	-	-	-	-
P.H.F.		0.943				0.882					
PM Peak	-	-	12:00	-	-	-	05:00	-	-	-	-
Vol.	-	-	734	-	-	-	947	-	-	-	-
P.H.F.			0.956				0.897				
Percentage		39.1%	60.9%			36.2%	63.8%				
ADT/AADT		ADT 21,656		AADT 21,656							

APPENDIX B

COUNTY OF IMPERIAL AND CITY OF EL CENTRO ROADWAY CLASSIFICATION TABLE; EXCERPTS FROM THE COUNTY OF IMPERIAL CIRCULATION ELEMENT

TABLE 5
IMPERIAL COUNTY STANDARD STREET CLASSIFICATION
AVERAGE DAILY VEHICLE TRIPS

Road		Level of Service (LOS)				
Class	**X-Section**	**A**	**B**	**C**	**D**	**E**
Expressway	154/210	30,000	42,000	60,000	70,000	80,000
Prime Arterial	106/136	22,200	37,000	44,600	50,000	57,000
Minor Arterial	82/102	14,800	24,700	29,600	33,400	37,000
Major Collector (Collector)	64/84	13,700	22,800	27,400	30,800	34,200
Minor Collector (Local Collector)	40/70	1,900	4,100	7,100	10,900	16,200
Local County (Residential)	40/60	*	*	<1,500	*	*
Local County (Residential Cul-de-Sac or Loop Street)	40/60	*	*	<200	*	*
Major Industrial Collector – (Industrial)	76/96	5,000	10,000	14,000	17,000	20,000
Industrial Local	44/64	2,500	5,000	7,000	8,500	10,000

* Levels of service are not applied to residential streets since their primary purpose is to serve abutting lots, not carry through traffic. Levels of service normally apply to roads carrying through traffic between major trip generators and attractors.

Table 5 was originally developed for the County of San Diego by the San Diego County Department of Public Works in 1985 and compares ADT to levels of service (LOS) for various roadway classifications. Proposed functional classifications were then inserted into this table and right-of-way widths adjusted to match County of Imperial standards.

Transition Areas

The Circulation and Scenic Highways Element is the graphical reference guide which shows the present and planned street system, along with the classification of those streets. It is important to note that where there is a change from one classification to another along a certain street, the transition will occur in mid-block areas to preclude non-continuing lanes and intersections. The design criteria (design, speed, curve radii, etc.) for the higher classification shall generally take precedence through the transition area.

Table ME.2: Vehicular Level of Service Definitions

LOS	Characteristics
A	Primarily free-flow operation. Vehicles are completely unimpeded in their ability to maneuver within the traffic stream. Controlled delay at the boundary intersections is minimal. The travel speed exceeds 85% of the base free-flow speed.
B	Reasonably unimpeded operation. The ability to maneuver within the traffic stream is only slightly restricted and control delay at the boundary intersections is not significant. The travel speed is between 67% and 85% of the base free-flow speed.
C	Stable operation. The ability to maneuver and change lanes at mid-segment locations may be more restricted than at LOS B. Longer queues at the boundary intersections may contribute to lower travel speeds. The travel speed is between 50% and 67% of the base free-flow speed.
D	Less stable condition in which small increases in flow may cause substantial increases in delay and decreases in travel speed. This operation may be due to adverse signal progression, high volume, or inappropriate signal timing at the boundary intersections. The travel speed is between 40% and 50% of the base free-flow speed.
E	Unstable operation and significant delay. Such operations may be due to some combination of adverse signal progression, high volume, and inappropriate signal timing at the boundary intersections. The travel speed is between 30% and 40% of the base free-flow speed.
F	Flow at extremely low speed. Congestion is likely occurring at the boundary intersections, as indicated by high delay and extensive queuing. The travel speed is 30% or less of the base free-flow speed. Also, LOS F is assigned to the subject direction of travel if the through movement at one or more boundary intersections have a volume-to-capacity ratio greater than 1.0.

Source: Highway Capacity Manual (HCM 6th Edition)

As previously described in Policy 4.4, Level of Service (LOS) C shall be the threshold for all Mobility Element roadways and intersections, except that Level of Service (LOS) D would be acceptable upon review and approval by the City Engineer after consideration of impacts to the public and lack of feasibility of attaining Level of Service (LOS) C due to right-of-way constraints. With the additional exception of Imperial Avenue between Ocotillo Drive and I-8 westbound ramps, where LOS E would be acceptable due to right-of-way constraints, unless otherwise approved by the City Engineer.

Table ME.3 presents the roadway segment capacity and LOS standards to be utilized for the City of El Centro Mobility Element roadways.

Table ME.3: El Centro Roadway Segment Daily Capacity (ADT) and Level of Service Standards

	ADT Capacity				
Roadway Functional Classification	LOS A	LOS B	LOS C	LOS D	LOS E
6-Lane Arterial	32,000	38,000	43,000	49,000	54,000
4-Lane Arterial	22,000	25,000	29,000	32,300	36,000
2-Lane Arterial	11,000	12,500	14,500	16,000	18,000
2-Lane Collector	6,000	7,500	9,000	10,500	12,000

C. Future Traffic Volume Forecast

Forecast Model

A modification of SCAG's 2025 Regional Model was used to forecast Year 2025 traffic volumes on the various street segments. Minor modifications were made to both the land use and network data to improve accuracy. The following key roadway network and land use parameters were verified and/or assumed:

The Socio-Economic and Land Use data was reviewed for the 2025 Imperial County Transportation Model (ICTM). The 2025 ICTM contained two different socio-economic and land use data, one is the Calexico General Plan (CalexGP) version and the other is the Imperial Mall (ImpMall4a) version. After a review of the demographic information for both versions and consultation with Caltrans staff, it was determined that the CalexGP model provided the most accurate traffic forecast.

The Calexico General Plan (CalexGP) version of the ICTM was updated based on comments from the City of Calexico and is called the CalexGP+ version. The CalexGP+ version is considered a land use alternative to the CalexGP and ImpMall4a versions of the model.

The transportation network in the 2025 Imperial County Transportation Model was modified to include a link for Kloke Road from SR 98 to Cole Road and minor adjustments to some key connections.

I-8 interchanges are assumed in 2050 at Drew Road, Forrester Road, Austin Road, Imperial Avenue, SR-86, Dogwood Road, SR-111, Bowker Road, and SR-7.

Year 2050 Traffic Volumes

Once the land use and network data were modified in the 2025 CalexGP+ Model, Year 2025 ADT volumes were forecasted. The Year 2025 forecasted ADT volumes were reviewed for validity and consistency with existing ADT volumes and the surrounding land use and network data. A review of all 2025 model traffic volumes was conducted and revisions to these forecast volumes were made as deemed appropriate, especially when forecast volumes appeared lower than expected.

Annual growth rates were calculated at the nearby road segments from the existing ADT volumes and Year 2025 ADT volumes. The average annual growth rates were calculated for all the segments in the study area. After a review of the annual growth rates, the following annual growth rates were applied to the segments in the circulation element plan to forecast Year 2050 volumes:

Year 2025 ADT volumes < 20,000 - two percent (2.0%) annual growth was applied to the Year 2025 ADT volumes to determine Year 2050 ADT volumes.

Year 2025 ADT volumes between 20,001 and 27,000 - one percent (1.0%) annual growth was applied to the Year 2025 ADT volumes to estimate Year 2050 ADT volumes.

Year 2025 ADT volumes > 27,000 - half percent (0.5%) annual growth was applied to the Year 2025 ADT volumes to determine Year 2050 ADT volumes.

The 2025 CalexGP+ Model did not contain volumes for all of the roadway segments in the Imperial County Circulation Element Plan. For those segments, the Year 2050 segment volumes were calculated by applying a reasonable annual growth rate. The resultant Year 2050 forecast traffic volumes for the roadway segments are summarized in Table 3.

As shown in Table 3, all unincorporated area street segments are forecast to operate at LOS C or better on a daily basis. For the purpose of this analysis, LOS C will be targeted as the minimum acceptable level of service. Most roadway segments are forecast to operate at LOS A and B with their proposed Circulation Element classification. Level of service on State Highways, in some cases, deteriorates to LOS D, however the County of Imperial has no jurisdiction over State Highways and planning for these facilities is undertaken by the State of California. County roads that do intersect with State routes should be given special consideration because delays at intersections tend to deteriorate operating conditions along street segments.

For the purposes of this analysis, a table (see Table 5, Section IV) to compare daily traffic levels of service has been utilized. This is a broad base approach which is used to size roadways to accommodate long term volumes.

D. Roadway Classification Recommendations

The circulation plan is developed to create an efficient transportation system on a countywide basis. Roadway classifications will provide for the effective flow of goods and people with minimum delays in a cost effective and well-maintained system.

The recommended roadway classifications for the key roadways were determined based on Year 2050 volumes. The goal of the recommended roadway classification is to ensure key roadway segments operate at LOS C or better for the forecasted Year 2050 traffic volumes. The recommended roadway classifications were then reviewed for consistency and countywide infrastructure goals based on the future land use and network data. Table 3 shows the recommended roadway classifications for selected road segments.

Dual left–turn lanes and dedicated right-turn lanes should be planned at the intersection of major roadways. Appendix A1 contains guidelines for the provision of left-turn lanes and right-turn lanes at the intersection of various types of roadways. It is recommended that grade-separated railroad crossings be planned at roadways classified as Prime Arterial or Expressway. Appendix A2 contains the typical intersection layouts for the different roadway classifications.

TABLE 3
IMPERIAL COUNTY PROJECTED STREET SEGMENT CONFIGURATIONS AND VOLUMES (continued)

Segment Location	2003 Classification	Year 2002 ADT Volume[a]	Year 2005 ADT Volume[a]	Year 2025 ADT Volume[c]	25 Year Total Growth Factor[d]	Year 2050 ADT Volume	Year 2050 Recommended Classification (# of Lanes)	2050 LOS[e]
Lyerly Road								
Bowles/Eddins	Minor Collector						Minor Collector (2)	
Lyons Road								
Drew/Nichols	Minor Collector						Major Collector (4)	
Proposed Nichols/La Brucherie	None						Major Collector (4)	
Main ST (Niland)								
SR-111/Blair	Major Collector						Major Collector (4)	
Martin Road								
Baughman/7th	Minor Collector						Minor Collector (2)	
7th/Bannister	Local						Minor Collector (2)	
Mead Road								
Dogwood/McConnell	Minor Collector						Minor Collector (2)	
Meadows Road								
Heber/Calexico (City)	Major Collector						Major Collector (4)	
Meloland Road								
Worthington/Correll	Minor Collector						Minor Collector (2)	
Proposed Correll/SR-98	Minor Collector						Minor Collector (2)	
McCabe Road								
Silsbee/La Brucherie	Major Collector						Prime Arterial (6-divided)	
La Brucherie/SR-111	Minor Arterial	N/A	200	17,270	1.64	28,500	Prime Arterial (6-divided)	B
SR-111/SR-7	Major Collector						Prime Arterial (6-divided)	
McConnell Road								
SR-78/Evan Hewes Hwy	Major Collector						Major Collector (4)	
McDonald Road								
Garst/SR-111	Minor Collector						Minor Collector (2)	
SR-111 TO Rd 8041	Minor Collector						Minor Collector (2)	
McKim Road								
Harris/Ralph	Minor Collector						Minor Collector (2)	
Miller Road (S33)								
I-8/Kumberg	Minor Collector						Minor Collector (2)	
I-8/SR-115	Major Collector	200	230	5,250	1.64	9,000	Major Collector (4)	A
SR-115/Kavanaugh	Major Collector	100	120	5,300	1.64	9,000	Major Collector (4)	A
Monte Road								
Pellett/Loveland	Minor Collector						Minor Collector (2)	
Neckel Road								
Austin/Clark	Minor Collector						Minor Collector (2)	
Nichols Road								
McCabe/Lyons	Minor Collector						Minor Collector (2)	
Noffsinger Road								
SR-111/McDonald	Minor Collector						Minor Collector (2)	
Norrish Road								
Gowling/Holt	Minor Collector						Minor Collector (2)	
Holt/Highline	Local						Major Collector (4)	
Highline/End	Major Collector						Major Collector (4)	
Orchard Road (S32)/ SR 7								
King/McCabe	Major Collector	700	810	50,740	1.13	57,500	Expressway (6)	C
McCabe/I-8	Major Collector	900	1,040	49,000	1.13	56,000	Expressway (6)	C
Holtville/I-8	Minor Arterial						Prime Arterial (6-divided)	
I-8/Connelly	Major Collector						Major Collector (4)	
Orr Road								
Baughman/SR-86	Minor Collector						Minor Collector (2)	
Park Road								
Proposed Dowden/Williams	None						Major Collector (4)	
Williams/Rutherford	Minor Collector						Major Collector (4)	
Proposed Rutherford/Dietrich	None						Major Collector (4)	
Parker Road								
Ross/Gilllett	Minor Collector						Minor Collector (2)	
Payne Road								
Huff/Erskine	Minor Collector						Minor Collector (2)	
Pellett Road								
Foulds/Monte	Minor Collector						Minor Collector (2)	
Proposed Monte/Imler	Minor Collector						Minor Collector (2)	
Pickett Road								
Hastain/Butters	Minor Collector						Minor Collector (2)	

TABLE 3
IMPERIAL COUNTY PROJECTED STREET SEGMENT CONFIGURATIONS AND VOLUMES (continued)

Segment Location	2003 Classification	Year 2002 ADT Volume[a]	Year 2005 ADT Volume[a]	Year 2025 ADT Volume[c]	25 Year Total Growth Factor[d]	Year 2050 ADT Volume	Year 2050 Recommended Classification (# of Lanes)	2050 LOS[e]
State Route 86								
Imperial County Line/Desert Shores	State Hwy	N/A	12,900	21,138	1.28	27,500	Minor Arterial (4)	C
Desert Shores/Brawley Ave.	State Hwy	N/A	12,400	20,319	1.28	26,500	Collector (4)	C
Brawley Ave./S. Marina	State Hwy	N/A	13,400	21,957	1.28	28,500	Minor Arterial (4)	C
S. Marina/Air Park	State Hwy	N/A	12,100	19,827	1.64	33,000	Prime Arterial (6-divided)	B
Air Park/SR-78 West	State Hwy	N/A	10,800	17,697	1.64	29,500	Minor Arterial (4)	C
SR-78 West/Lack	State Hwy	N/A	10,800	17,890	1.64	29,500	Minor Arterial (4)	C
Lack/West Westmorland City Limits	State Hwy	N/A	10,200	19,650	1.64	32,500	Prime Arterial (6-divided)	B
E Westmorland C. Limits/W Brawley C. Limits	State Hwy	N/A	14,000	19,440	1.64	32,000	Prime Arterial (6-divided)	B
South Brawley City Limits/Legion	State Hwy	N/A	21,400	28,300	1.13	32,500	Prime Arterial (6-divided)	B
Legion/Keystone	State Hwy	N/A	19,100	27,940	1.13	32,000	Prime Arterial (6-divided)	B
Keystone/Imperial Ave.	State Hwy	N/A	14,700	27,980	1.13	32,000	Prime Arterial (6-divided)	B
I-8/McCabe	State Hwy	N/A	21,500	24,890	1.28	32,000	Prime Arterial (6-divided)	B
McCabe/Heber	State Hwy	N/A	7,100	26,100	1.28	33,500	Prime Arterial (6-divided)	B
Heber/Dogwood	State Hwy	N/A	7,500	26,100	1.28	33,500	Prime Arterial (6-divided)	B
Dogwood/SR-111	State Hwy	N/A	5,200	26,000	1.28	33,500	Prime Arterial (6-divided)	B
South Imperial City Limits/North El Centro City Limits	State Hwy	N/A	6,500	27,980	1.13	32,000	Prime Arterial (6-divided)	B
State Route 98								
Imperial Hwy/Drew	State Hwy	N/A	2,300	1,730	1.64	3,000	Local Collector (2)	B
Drew/Clark	State Hwy	N/A	3,800	5,350	1.64	9,000	Collector (4)	A
Clark/Dogwood	State Hwy	N/A	4,550	8,800	1.64	14,500	Collector (4)	B
Dogwood/West Calexico City Limits	State Hwy	N/A	9,800	24,180	1.64	31,500	Prime Arterial (6-divided)	B
East Calexico City Limits/Barbara Worth	State Hwy	N/A	24,400	26,000	1.64	33,500	Prime Arterial (6-divided)	B
Barbara Worth/Bonds Corner	State Hwy	N/A	16,300	26,000	1.64	33,500	Prime Arterial (6-divided)	B
Bonds Corner/E. Highline Canal	State Hwy	N/A	4,500	770	1.64	1,500	Local Collector (2)	A
E. Highline Canal/I-8	State Hwy	N/A	2,200	250	1.64	500	Local Collector (2)	A
State Route 111								
North Calexico City Limits	State Hwy	N/A	50,000	97,570	1.13	111,000	Freeway (8)	C
Heber/McCabe	State Hwy	N/A	33,500	98,650	1.13	112,000	Freeway (8)	C
McCabe/I-8	State Hwy	N/A	37,000	90,830	1.13	103,000	Freeway (8)	C
I-8/Evan Hewes Hwy	State Hwy	N/A	16,300	52,980	1.13	60,500	Expressway (6)	D
Evan Hewes/Aten	State Hwy	N/A	14,100	60,200	1.13	68,500	Expressway (6)	D
Aten/Worthington	State Hwy	N/A	11,300	58,160	1.13	66,000	Expressway (6)	D
Worthington/Keystone	State Hwy	N/A	10,600	58,710	1.13	67,000	Expressway (6)	D
Keystone/E. Junction 78	State Hwy	N/A	9,300	57,590	1.13	65,500	Expressway (6)	D
North Brawley City Limits/Rutherford	State Hwy	N/A	9,500	18,510	1.64	30,500	Prime Arterial (6-divided)	B
Rutherford/South Calipatria City Limits	State Hwy	N/A	6,600	18,560	1.64	30,500	Prime Arterial (6-divided)	B
North Calipatria City Limits/Sinclair	State Hwy	N/A	5,700	15,640	1.64	26,000	Minor Arterial (4)	C
Sinclair/Niland Ave	State Hwy	N/A	5,100	13,532	1.64	22,500	Collector (4)	B
Niland Ave/English	State Hwy	N/A	3,700	9,817	1.64	16,500	Collector (4)	B
English/Bombay Beach	State Hwy	N/A	2,300	6,103	1.64	10,500	Collector (4)	A
Bombay Beach/Imperial-Riverside County line	State Hwy	N/A	1,900	5,041	1.64	8,500	Collector (4)	A
State Route 115								
Junction I-8/East Holtville City Limits	State Hwy	N/A	1,850	4,140	1.64	7,000	Local Collector (2)	C
West Holtville City Limits/West Junction Evan Hewes Hwy	State Hwy	N/A	6,600	8,320	1.64	14,000	Collector (4)	B
West Junction Evan Hewes Hwy/SR-78	State Hwy	N/A	2,850	27,870	1.13	32,000	Prime Arterial (6-divided)	B
SR-78/Rutherford	State Hwy	N/A	990	13,450	1.64	22,500	Minor Arterial (4)	B
Rutherford/Wirt	State Hwy	N/A	1,650	9,720	1.64	16,000	Collector (4)	B
Wirt/East Calipatria City Limits	State Hwy	N/A	1,150	9,240	1.64	15,500	Collector (4)	B
State Route 186								
I-8/International Border	State Hwy	N/A					State Hwy	

Notes:

* See Table 1 regarding additional right-of-way for transit facility with roadway.

a. Volume from Imperial County Circulation and Scenic Highways Element Manual (Dec. 2003).

b. Volume from Caltrans, Imperial County, or Linscott Law & Greenspan, Engineers counts.

c. Volumes from Caltrans CalexGP+ Model and adjusted higher in some cases.

d. A 0.5%, 1.0%, or 2.0% annual growth rate was applied to the Year 2025 volumes to obtain Year 2050 volumes.

e. Capacity based on the Imperial County Classification Table (depending on the Year 2050 volume amount).

APPENDIX C

EXISTING INTERSECTION ANALYSIS WORKSHEETS

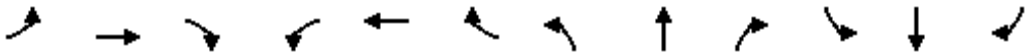

Movement	EBL	EBT	EBR	WBL	WBT	WBR	NBL	NBT	NBR	SBL	SBT	SBR
Lane Configurations												
Traffic Volume (veh/h)	102	216	188	88	224	58	124	737	80	87	522	94
Future Volume (veh/h)	102	216	188	88	224	58	124	737	80	87	522	94
Initial Q (Qb), veh	0	0	0	0	0	0	0	0	0	0	0	0
Ped-Bike Adj(A_pbT)	1.00		0.97	1.00		0.96	1.00		0.96	1.00		0.96
Parking Bus, Adj	1.00	1.00	1.00	1.00	1.00	1.00	1.00	1.00	1.00	1.00	1.00	1.00
Work Zone On Approach		No			No			No			No	
Adj Sat Flow, veh/h/ln	1870	1870	1870	1870	1870	1870	1870	1870	1870	1870	1870	1870
Adj Flow Rate, veh/h	144	304	265	138	350	91	159	945	103	128	768	138
Peak Hour Factor	0.71	0.71	0.71	0.64	0.64	0.64	0.78	0.78	0.78	0.68	0.68	0.68
Percent Heavy Veh, %	2	2	2	2	2	2	2	2	2	2	2	2
Cap, veh/h	170	420	343	164	413	338	185	1326	144	154	1178	212
Arrive On Green	0.10	0.22	0.22	0.09	0.22	0.22	0.10	0.41	0.41	0.09	0.39	0.39
Sat Flow, veh/h	1781	1870	1530	1781	1870	1529	1781	3216	350	1781	2987	537
Grp Volume(v), veh/h	144	304	265	138	350	91	159	522	526	128	457	449
Grp Sat Flow(s),veh/h/ln	1781	1870	1530	1781	1870	1529	1781	1777	1790	1781	1777	1746
Q Serve(g_s), s	9.7	18.4	19.8	9.3	21.9	6.0	10.7	29.8	29.8	8.6	25.6	25.6
Cycle Q Clear(g_c), s	9.7	18.4	19.8	9.3	21.9	6.0	10.7	29.8	29.8	8.6	25.6	25.6
Prop In Lane	1.00		1.00	1.00		1.00	1.00		0.20	1.00		0.31
Lane Grp Cap(c), veh/h	170	420	343	164	413	338	185	732	738	154	701	689
V/C Ratio(X)	0.85	0.72	0.77	0.84	0.85	0.27	0.86	0.71	0.71	0.83	0.65	0.65
Avail Cap(c_a), veh/h	201	497	406	197	492	402	216	732	738	181	701	689
HCM Platoon Ratio	1.00	1.00	1.00	1.00	1.00	1.00	1.00	1.00	1.00	1.00	1.00	1.00
Upstream Filter(I)	1.00	1.00	1.00	0.63	0.63	0.63	0.65	0.65	0.65	1.00	1.00	1.00
Uniform Delay (d), s/veh	54.3	43.8	44.4	54.5	45.6	39.4	53.8	29.8	29.9	54.9	30.1	30.1
Incr Delay (d2), s/veh	21.2	3.2	6.0	13.8	6.5	0.1	15.7	3.9	3.8	21.1	4.7	4.8
Initial Q Delay(d3),s/veh	0.0	0.0	0.0	0.0	0.0	0.0	0.0	0.0	0.0	0.0	0.0	0.0
%ile BackOfQ(50%),veh/ln	5.3	8.8	8.0	4.8	10.8	2.3	5.6	13.4	13.5	4.8	11.7	11.6
Unsig. Movement Delay, s/veh												
LnGrp Delay(d),s/veh	75.5	47.0	50.4	68.3	52.1	39.5	69.5	33.7	33.7	76.0	34.8	34.9
LnGrp LOS	E	D	D	E	D	D	E	C	C	E	C	C
Approach Vol, veh/h		713			579			1207			1034	
Approach Delay, s/veh		54.0			54.0			38.4			39.9	
Approach LOS		D			D			D			D	

Timer - Assigned Phs	1	2	3	4	5	6	7	8
Phs Duration (G+Y+Rc), s	16.1	56.0	16.8	33.1	18.3	53.8	17.3	32.6
Change Period (Y+Rc), s	5.6	5.7	5.6	5.7	5.6	5.7	5.6	5.7
Max Green Setting (Gmax), s	12.4	41.1	13.5	32.4	14.8	38.7	13.8	32.1
Max Q Clear Time (g_c+I1), s	10.6	31.8	11.3	21.8	12.7	27.6	11.7	23.9
Green Ext Time (p_c), s	0.0	3.3	0.0	1.3	0.0	3.1	0.0	1.0

Intersection Summary	
HCM 6th Ctrl Delay	44.6
HCM 6th LOS	D



Movement	EBL	EBT	EBR	WBL	WBT	WBR	NBL	NBT	NBR	SBL	SBT	SBR
Lane Configurations												
Traffic Volume (veh/h)	74	236	78	19	243	17	126	569	25	64	371	84
Future Volume (veh/h)	74	236	78	19	243	17	126	569	25	64	371	84
Initial Q (Qb), veh	0	0	0	0	0	0	0	0	0	0	0	0
Ped-Bike Adj(A_pbT)	1.00		0.98	0.99		0.97	1.00		0.95	1.00		0.95
Parking Bus, Adj	1.00	1.00	1.00	1.00	1.00	1.00	1.00	1.00	1.00	1.00	1.00	1.00
Work Zone On Approach		No			No			No			No	
Adj Sat Flow, veh/h/ln	1870	1870	1870	1870	1870	1870	1870	1870	1870	1870	1870	1870
Adj Flow Rate, veh/h	109	347	115	27	347	24	168	759	33	96	554	125
Peak Hour Factor	0.68	0.68	0.68	0.70	0.70	0.70	0.75	0.75	0.75	0.67	0.67	0.67
Percent Heavy Veh, %	2	2	2	2	2	2	2	2	2	2	2	2
Cap, veh/h	215	591	196	69	438	29	212	1094	48	125	762	171
Arrive On Green	0.12	0.44	0.44	0.27	0.27	0.27	0.12	0.32	0.32	0.07	0.27	0.27
Sat Flow, veh/h	1781	1335	443	64	1610	107	1781	3461	150	1781	2851	640
Grp Volume(v), veh/h	109	0	462	398	0	0	168	390	402	96	344	335
Grp Sat Flow(s),veh/h/ln	1781	0	1778	1781	0	0	1781	1777	1835	1781	1777	1714
Q Serve(g_s), s	4.3	0.0	14.5	6.2	0.0	0.0	6.8	14.2	14.3	3.9	13.1	13.2
Cycle Q Clear(g_c), s	4.3	0.0	14.5	15.3	0.0	0.0	6.8	14.2	14.3	3.9	13.1	13.2
Prop In Lane	1.00		0.25	0.07		0.06	1.00		0.08	1.00		0.37
Lane Grp Cap(c), veh/h	215	0	787	537	0	0	212	562	580	125	475	458
V/C Ratio(X)	0.51	0.00	0.59	0.74	0.00	0.00	0.79	0.69	0.69	0.77	0.72	0.73
Avail Cap(c_a), veh/h	319	0	1331	963	0	0	440	937	967	305	803	774
HCM Platoon Ratio	1.00	1.00	1.00	1.00	1.00	1.00	1.00	1.00	1.00	1.00	1.00	1.00
Upstream Filter(I)	1.00	0.00	1.00	1.00	0.00	0.00	1.00	1.00	1.00	1.00	1.00	1.00
Uniform Delay (d), s/veh	30.5	0.0	15.6	25.1	0.0	0.0	31.8	22.2	22.2	33.9	24.7	24.7
Incr Delay (d2), s/veh	1.9	0.0	0.7	2.0	0.0	0.0	6.6	1.5	1.5	9.5	2.1	2.3
Initial Q Delay(d3),s/veh	0.0	0.0	0.0	0.0	0.0	0.0	0.0	0.0	0.0	0.0	0.0	0.0
%ile BackOfQ(50%),veh/ln	1.9	0.0	5.4	6.4	0.0	0.0	3.2	5.8	6.0	2.0	5.5	5.4
Unsig. Movement Delay, s/veh												
LnGrp Delay(d),s/veh	32.4	0.0	16.3	27.2	0.0	0.0	38.4	23.8	23.7	43.4	26.8	27.0
LnGrp LOS	C	A	B	C	A	A	D	C	C	D	C	C
Approach Vol, veh/h		571			398			960			775	
Approach Delay, s/veh		19.3			27.2			26.3			28.9	
Approach LOS		B			C			C			C	

Timer - Assigned Phs	1	2		4	5	6	7	8
Phs Duration (G+Y+Rc), s	8.9	27.9		37.3	12.5	24.3	12.6	24.7
Change Period (Y+Rc), s	3.7	4.5		4.5	3.7	4.5	3.7	4.5
Max Green Setting (Gmax), s	12.7	39.1		55.5	18.3	33.5	13.3	38.5
Max Q Clear Time (g_c+I1), s	5.9	16.3		16.5	8.8	15.2	6.3	17.3
Green Ext Time (p_c), s	0.1	5.2		3.2	0.3	4.1	0.1	2.4

Intersection Summary	
HCM 6th Ctrl Delay	25.7
HCM 6th LOS	C



Movement	EBL	EBT	EBR	WBL	WBT	WBR	NBL	NBT	NBR	SBL	SBT	SBR
Lane Configurations												
Traffic Volume (veh/h)	41	178	65	78	127	186	34	559	85	110	442	15
Future Volume (veh/h)	41	178	65	78	127	186	34	559	85	110	442	15
Initial Q (Qb), veh	0	0	0	0	0	0	0	0	0	0	0	0
Ped-Bike Adj(A_pbT)	1.00		0.97	1.00		0.96	1.00		0.95	1.00		0.95
Parking Bus, Adj	1.00	1.00	1.00	1.00	1.00	1.00	1.00	1.00	1.00	1.00	1.00	1.00
Work Zone On Approach		No			No			No			No	
Adj Sat Flow, veh/h/ln	1870	1870	1870	1870	1870	1870	1870	1870	1870	1870	1870	1870
Adj Flow Rate, veh/h	53	228	83	95	155	227	39	635	97	133	533	18
Peak Hour Factor	0.78	0.78	0.78	0.82	0.82	0.82	0.88	0.88	0.88	0.83	0.83	0.83
Percent Heavy Veh, %	2	2	2	2	2	2	2	2	2	2	2	2
Cap, veh/h	62	267	97	137	224	300	65	844	129	160	1149	39
Arrive On Green	0.24	0.24	0.24	0.20	0.20	0.20	0.04	0.28	0.28	0.09	0.33	0.33
Sat Flow, veh/h	258	1108	403	697	1138	1525	1781	3066	467	1781	3501	118
Grp Volume(v), veh/h	364	0	0	250	0	227	39	367	365	133	270	281
Grp Sat Flow(s),veh/h/ln	1769	0	0	1835	0	1525	1781	1777	1757	1781	1777	1842
Q Serve(g_s), s	23.2	0.0	0.0	14.9	0.0	16.6	2.5	22.3	22.4	8.7	14.2	14.3
Cycle Q Clear(g_c), s	23.2	0.0	0.0	14.9	0.0	16.6	2.5	22.3	22.4	8.7	14.2	14.3
Prop In Lane	0.15		0.23	0.38		1.00	1.00		0.27	1.00		0.06
Lane Grp Cap(c), veh/h	426	0	0	361	0	300	65	489	483	160	583	605
V/C Ratio(X)	0.85	0.00	0.00	0.69	0.00	0.76	0.60	0.75	0.75	0.83	0.46	0.46
Avail Cap(c_a), veh/h	555	0	0	576	0	478	134	563	557	231	660	684
HCM Platoon Ratio	1.00	1.00	1.00	1.00	1.00	1.00	1.00	1.00	1.00	1.00	1.00	1.00
Upstream Filter(I)	1.00	0.00	0.00	1.00	0.00	1.00	1.00	1.00	1.00	1.00	1.00	1.00
Uniform Delay (d), s/veh	42.8	0.0	0.0	44.1	0.0	44.7	56.0	39.1	39.1	52.8	31.4	31.4
Incr Delay (d2), s/veh	9.9	0.0	0.0	2.4	0.0	3.9	3.2	8.8	9.0	10.7	2.1	2.0
Initial Q Delay(d3),s/veh	0.0	0.0	0.0	0.0	0.0	0.0	0.0	0.0	0.0	0.0	0.0	0.0
%ile BackOfQ(50%),veh/ln	11.2	0.0	0.0	7.0	0.0	6.5	1.2	10.7	10.6	4.3	6.3	6.5
Unsig. Movement Delay, s/veh												
LnGrp Delay(d),s/veh	52.7	0.0	0.0	46.5	0.0	48.7	59.2	47.9	48.1	63.5	33.5	33.4
LnGrp LOS	D	A	A	D	A	D	E	D	D	E	C	C
Approach Vol, veh/h		364			477			771			684	
Approach Delay, s/veh		52.7			47.5			48.6			39.3	
Approach LOS		D			D			D			D	

Timer - Assigned Phs	1	2		4	5	6		8
Phs Duration (G+Y+Rc), s	10.0	44.1		29.3	16.3	37.9		34.5
Change Period (Y+Rc), s	* 5.7	5.4		6.1	* 5.7	5.4		6.1
Max Green Setting (Gmax), s	* 8.3	43.8		37.0	* 15	37.4		37.0
Max Q Clear Time (g_c+I1), s	14.5	16.3		18.6	10.7	24.4		25.2
Green Ext Time (p_c), s	0.0	8.1		2.1	0.1	7.1		1.7

Intersection Summary	
HCM 6th Ctrl Delay	46.2
HCM 6th LOS	D

Notes

* HCM 6th computational engine requires equal clearance times for the phases crossing the barrier.



Movement	EBL	EBT	EBR	WBL	WBT	WBR	NBL	NBT	NBR	SBL	SBT	SBR
Lane Configurations												
Traffic Volume (veh/h)	59	83	85	33	130	52	113	385	63	25	317	55
Future Volume (veh/h)	59	83	85	33	130	52	113	385	63	25	317	55
Initial Q (Qb), veh	0	0	0	0	0	0	0	0	0	0	0	0
Ped-Bike Adj(A_pbT)	1.00		0.91	1.00		0.94	1.00		0.95	1.00		0.95
Parking Bus, Adj	1.00	1.00	1.00	1.00	1.00	1.00	1.00	1.00	1.00	1.00	1.00	1.00
Work Zone On Approach		No			No			No			No	
Adj Sat Flow, veh/h/ln	1870	1870	1870	1870	1870	1870	1870	1870	1870	1870	1870	1870
Adj Flow Rate, veh/h	68	95	98	40	157	63	133	453	74	32	412	71
Peak Hour Factor	0.87	0.87	0.87	0.83	0.83	0.83	0.85	0.85	0.85	0.77	0.77	0.77
Percent Heavy Veh, %	2	2	2	2	2	2	2	2	2	2	2	2
Cap, veh/h	91	128	173	53	207	83	168	517	84	58	506	407
Arrive On Green	0.12	0.12	0.12	0.20	0.20	0.20	0.09	0.33	0.33	0.03	0.27	0.27
Sat Flow, veh/h	764	1068	1441	269	1055	423	1781	1556	254	1781	1870	1503
Grp Volume(v), veh/h	163	0	98	260	0	0	133	0	527	32	412	71
Grp Sat Flow(s),veh/h/ln	1832	0	1441	1747	0	0	1781	0	1810	1781	1870	1503
Q Serve(g_s), s	6.2	0.0	4.7	10.2	0.0	0.0	5.3	0.0	19.9	1.3	15.0	2.6
Cycle Q Clear(g_c), s	6.2	0.0	4.7	10.2	0.0	0.0	5.3	0.0	19.9	1.3	15.0	2.6
Prop In Lane	0.42		1.00	0.15		0.24	1.00		0.14	1.00		1.00
Lane Grp Cap(c), veh/h	219	0	173	342	0	0	168	0	601	58	506	407
V/C Ratio(X)	0.74	0.00	0.57	0.76	0.00	0.00	0.79	0.00	0.88	0.55	0.81	0.17
Avail Cap(c_a), veh/h	432	0	340	628	0	0	353	0	1202	133	1010	812
HCM Platoon Ratio	1.00	1.00	1.00	1.00	1.00	1.00	1.00	1.00	1.00	1.00	1.00	1.00
Upstream Filter(I)	1.00	0.00	1.00	1.00	0.00	0.00	1.00	0.00	1.00	1.00	1.00	1.00
Uniform Delay (d), s/veh	30.9	0.0	30.2	27.6	0.0	0.0	32.2	0.0	22.8	34.6	24.7	20.3
Incr Delay (d2), s/veh	1.9	0.0	1.1	1.3	0.0	0.0	3.2	0.0	1.7	3.0	1.2	0.1
Initial Q Delay(d3),s/veh	0.0	0.0	0.0	0.0	0.0	0.0	0.0	0.0	0.0	0.0	0.0	0.0
%ile BackOfQ(50%),veh/ln	2.7	0.0	1.6	4.1	0.0	0.0	2.3	0.0	7.6	0.6	6.1	0.8
Unsig. Movement Delay, s/veh												
LnGrp Delay(d),s/veh	32.7	0.0	31.3	28.9	0.0	0.0	35.4	0.0	24.5	37.5	26.0	20.3
LnGrp LOS	C	A	C	C	A	A	D	A	C	D	C	C
Approach Vol, veh/h		261			260			660			515	
Approach Delay, s/veh		32.2			28.9			26.7			25.9	
Approach LOS		C			C			C			C	

Timer - Assigned Phs	1	2		4	5	6		8
Phs Duration (G+Y+Rc), s	8.0	29.9		14.6	12.4	25.4		20.1
Change Period (Y+Rc), s	5.6	5.8		5.9	5.6	5.8		5.9
Max Green Setting (Gmax), s	5.4	48.2		17.1	14.4	39.2		26.1
Max Q Clear Time (g_c+I1), s	3.3	21.9		8.2	7.3	17.0		12.2
Green Ext Time (p_c), s	0.0	1.9		0.5	0.0	1.5		0.8

Intersection Summary			
HCM 6th Ctrl Delay		27.6	
HCM 6th LOS		C	

Intersection	
Intersection Delay, s/veh	79.3
Intersection LOS	F

Movement	EBL	EBT	EBR	WBL	WBT	WBR	NBL	NBT	NBR	SBL	SBT	SBR
Lane Configurations												
Traffic Vol, veh/h	52	150	80	43	113	84	105	551	64	78	342	29
Future Vol, veh/h	52	150	80	43	113	84	105	551	64	78	342	29
Peak Hour Factor	0.73	0.73	0.73	0.74	0.74	0.74	0.78	0.78	0.78	0.66	0.66	0.66
Heavy Vehicles, %	2	2	2	2	2	2	2	2	2	2	2	2
Mvmt Flow	71	205	110	58	153	114	135	706	82	118	518	44
Number of Lanes	0	1	0	0	1	0	1	2	0	1	2	0

Approach	EB	WB	NB	SB
Opposing Approach	WB	EB	SB	NB
Opposing Lanes	1	1	3	3
Conflicting Approach Left	SB	NB	EB	WB
Conflicting Lanes Left	3	3	1	1
Conflicting Approach Right	NB	SB	WB	EB
Conflicting Lanes Right	3	3	1	1
HCM Control Delay	103.7	63.1	101	43.7
HCM LOS	F	F	F	E

Lane	NBLn1	NBLn2	NBLn3	EBLn1	WBLn1	SBLn1	SBLn2	SBLn3
Vol Left, %	100%	0%	0%	18%	18%	100%	0%	0%
Vol Thru, %	0%	100%	74%	53%	47%	0%	100%	80%
Vol Right, %	0%	0%	26%	28%	35%	0%	0%	20%
Sign Control	Stop	Stop	Stop	Stop	Stop	Stop	Stop	Stop
Traffic Vol by Lane	105	367	248	282	240	78	228	143
LT Vol	105	0	0	52	43	78	0	0
Through Vol	0	367	184	150	113	0	228	114
RT Vol	0	0	64	80	84	0	0	29
Lane Flow Rate	135	471	318	386	324	118	345	217
Geometry Grp	7	7	7	7	7	7	7	7
Degree of Util (X)	0.376	1.247	0.824	1.076	0.912	0.333	0.925	0.571
Departure Headway (Hd)	10.613	10.077	9.884	10.506	10.775	10.79	10.253	10.101
Convergence, Y/N	Yes	Yes	Yes	Yes	Yes	Yes	Yes	Yes
Cap	341	363	368	348	341	336	356	360
Service Time	8.313	7.777	7.584	8.206	8.475	8.49	7.953	7.801
HCM Lane V/C Ratio	0.396	1.298	0.864	1.109	0.95	0.351	0.969	0.603
HCM Control Delay	19.6	161.9	45.3	103.7	63.1	18.8	63.6	25.4
HCM Lane LOS	C	F	E	F	F	C	F	D
HCM 95th-tile Q	1.7	19.6	7.3	13.5	9	1.4	9.5	3.4



Movement	EBL	EBT	EBR	WBL	WBT	WBR	NBL	NBT	NBR	SBL	SBT	SBR
Lane Configurations												
Traffic Volume (veh/h)	101	77	143	58	80	19	66	557	27	12	490	32
Future Volume (veh/h)	101	77	143	58	80	19	66	557	27	12	490	32
Initial Q (Qb), veh	0	0	0	0	0	0	0	0	0	0	0	0
Ped-Bike Adj(A_pbT)	1.00		0.96	1.00		0.96	1.00		0.96	1.00		0.95
Parking Bus, Adj	1.00	1.00	1.00	1.00	1.00	1.00	1.00	1.00	1.00	1.00	1.00	1.00
Work Zone On Approach		No			No			No			No	
Adj Sat Flow, veh/h/ln	1870	1870	1870	1870	1870	1870	1870	1870	1870	1870	1870	1870
Adj Flow Rate, veh/h	123	94	174	91	125	30	79	663	32	14	590	39
Peak Hour Factor	0.82	0.82	0.82	0.64	0.64	0.64	0.84	0.84	0.84	0.83	0.83	0.83
Percent Heavy Veh, %	2	2	2	2	2	2	2	2	2	2	2	2
Cap, veh/h	168	129	247	126	173	42	136	1213	58	48	1021	67
Arrive On Green	0.16	0.16	0.16	0.19	0.19	0.19	0.08	0.35	0.35	0.03	0.30	0.30
Sat Flow, veh/h	1031	788	1517	661	908	218	1781	3442	166	1781	3371	222
Grp Volume(v), veh/h	217	0	174	246	0	0	79	342	353	14	310	319
Grp Sat Flow(s),veh/h/ln	1819	0	1517	1788	0	0	1781	1777	1831	1781	1777	1817
Q Serve(g_s), s	8.3	0.0	7.9	9.4	0.0	0.0	3.1	11.3	11.3	0.6	10.8	10.8
Cycle Q Clear(g_c), s	8.3	0.0	7.9	9.4	0.0	0.0	3.1	11.3	11.3	0.6	10.8	10.8
Prop In Lane	0.57		1.00	0.37		0.12	1.00		0.09	1.00		0.12
Lane Grp Cap(c), veh/h	297	0	247	341	0	0	136	626	645	48	538	551
V/C Ratio(X)	0.73	0.00	0.70	0.72	0.00	0.00	0.58	0.55	0.55	0.29	0.58	0.58
Avail Cap(c_a), veh/h	629	0	525	692	0	0	300	938	967	202	841	860
HCM Platoon Ratio	1.00	1.00	1.00	1.00	1.00	1.00	1.00	1.00	1.00	1.00	1.00	1.00
Upstream Filter(I)	1.00	0.00	1.00	1.00	0.00	0.00	1.00	1.00	1.00	1.00	1.00	1.00
Uniform Delay (d), s/veh	29.1	0.0	28.9	27.8	0.0	0.0	32.6	19.0	19.0	34.9	21.5	21.5
Incr Delay (d2), s/veh	3.5	0.0	3.6	2.9	0.0	0.0	1.5	2.7	2.6	1.2	3.5	3.5
Initial Q Delay(d3),s/veh	0.0	0.0	0.0	0.0	0.0	0.0	0.0	0.0	0.0	0.0	0.0	0.0
%ile BackOfQ(50%),veh/ln	3.8	0.0	3.0	4.1	0.0	0.0	1.3	4.6	4.8	0.2	4.6	4.7
Unsig. Movement Delay, s/veh												
LnGrp Delay(d),s/veh	32.5	0.0	32.5	30.7	0.0	0.0	34.1	21.7	21.6	36.1	25.0	25.0
LnGrp LOS	C	A	C	C	A	A	C	C	C	D	C	C
Approach Vol, veh/h		391			246			774			643	
Approach Delay, s/veh		32.5			30.7			22.9			25.3	
Approach LOS		C			C			C			C	

Timer - Assigned Phs	1	2		4	5	6		8
Phs Duration (G+Y+Rc), s	10.3	27.6		18.6	6.7	31.2		16.6
Change Period (Y+Rc), s	* 4.7	5.4		* 4.7	* 4.7	5.4		4.7
Max Green Setting (Gmax), s	* 13	34.6		* 28	* 8.3	38.6		25.3
Max Q Clear Time (g_c+I1), s	5.1	12.8		11.4	2.6	13.3		10.3
Green Ext Time (p_c), s	0.0	8.4		1.3	0.0	10.2		1.6

Intersection Summary	
HCM 6th Ctrl Delay	26.4
HCM 6th LOS	C

Notes

* HCM 6th computational engine requires equal clearance times for the phases crossing the barrier.



Movement	EBL	EBT	EBR	WBL	WBT	WBR	NBL	NBT	NBR	SBL	SBT	SBR
Lane Configurations												
Traffic Volume (veh/h)	161	118	316	44	110	54	234	728	46	28	466	92
Future Volume (veh/h)	161	118	316	44	110	54	234	728	46	28	466	92
Initial Q (Qb), veh	0	0	0	0	0	0	0	0	0	0	0	0
Ped-Bike Adj(A_pbT)	1.00		0.98	0.99		0.96	1.00		0.96	1.00		0.97
Parking Bus, Adj	1.00	1.00	1.00	1.00	1.00	1.00	1.00	1.00	1.00	1.00	1.00	1.00
Work Zone On Approach		No			No			No			No	
Adj Sat Flow, veh/h/ln	1870	1870	1870	1870	1870	1870	1870	1870	1870	1870	1870	1870
Adj Flow Rate, veh/h	224	164	439	52	129	64	312	971	61	39	647	128
Peak Hour Factor	0.72	0.72	0.72	0.85	0.85	0.85	0.75	0.75	0.75	0.72	0.72	0.72
Percent Heavy Veh, %	2	2	2	2	2	2	2	2	2	2	2	2
Cap, veh/h	241	746	617	89	184	82	335	1381	87	57	740	146
Arrive On Green	0.14	0.40	0.40	0.21	0.21	0.21	0.19	0.41	0.41	0.03	0.25	0.25
Sat Flow, veh/h	1781	1870	1546	228	869	388	1781	3386	213	1781	2939	581
Grp Volume(v), veh/h	224	164	439	245	0	0	312	510	522	39	391	384
Grp Sat Flow(s),veh/h/ln	1781	1870	1546	1486	0	0	1781	1777	1821	1781	1777	1743
Q Serve(g_s), s	13.5	6.3	25.9	11.1	0.0	0.0	18.7	25.8	25.8	2.4	22.9	23.0
Cycle Q Clear(g_c), s	13.5	6.3	25.9	16.4	0.0	0.0	18.7	25.8	25.8	2.4	22.9	23.0
Prop In Lane	1.00		1.00	0.21		0.26	1.00		0.12	1.00		0.33
Lane Grp Cap(c), veh/h	241	746	617	355	0	0	335	725	743	57	447	439
V/C Ratio(X)	0.93	0.22	0.71	0.69	0.00	0.00	0.93	0.70	0.70	0.69	0.87	0.88
Avail Cap(c_a), veh/h	241	919	759	484	0	0	335	725	743	84	472	463
HCM Platoon Ratio	1.00	1.00	1.00	1.00	1.00	1.00	1.00	1.00	1.00	1.00	1.00	1.00
Upstream Filter(I)	1.00	1.00	1.00	1.00	0.00	0.00	1.00	1.00	1.00	1.00	1.00	1.00
Uniform Delay (d), s/veh	46.4	21.5	27.4	39.8	0.0	0.0	43.4	26.7	26.7	52.0	38.9	39.0
Incr Delay (d2), s/veh	38.3	0.1	1.6	1.0	0.0	0.0	32.0	3.4	3.3	5.4	16.4	17.0
Initial Q Delay(d3),s/veh	0.0	0.0	0.0	0.0	0.0	0.0	0.0	0.0	0.0	0.0	0.0	0.0
%ile BackOfQ(50%),veh/ln	8.5	2.7	9.6	6.2	0.0	0.0	11.2	11.4	11.6	1.1	11.9	11.8
Unsig. Movement Delay, s/veh												
LnGrp Delay(d),s/veh	84.7	21.5	29.0	40.8	0.0	0.0	75.4	30.0	30.0	57.4	55.4	56.0
LnGrp LOS	F	C	C	D	A	A	E	C	C	E	E	E
Approach Vol, veh/h		827			245			1344			814	
Approach Delay, s/veh		42.6			40.8			40.5			55.7	
Approach LOS		D			D			D			E	

Timer - Assigned Phs	1	2		4	5	6	7	8
Phs Duration (G+Y+Rc), s	9.1	50.0		49.5	26.0	33.0	20.3	29.2
Change Period (Y+Rc), s	5.6	5.7		6.2	5.6	5.7	5.6	6.2
Max Green Setting (Gmax), s	5.1	44.1		53.3	20.4	28.8	14.7	33.0
Max Q Clear Time (g_c+I1), s	4.4	27.8		27.9	20.7	25.0	15.5	18.4
Green Ext Time (p_c), s	0.0	8.3		1.5	0.0	2.1	0.0	0.9

Intersection Summary		
HCM 6th Ctrl Delay		44.9
HCM 6th LOS		D



Movement	EBL	EBT	EBR	WBL	WBT	WBR	NBL	NBT	NBR	SBL	SBT	SBR
Lane Configurations												
Traffic Volume (veh/h)	0	0	0	212	1	304	143	509	0	0	702	95
Future Volume (veh/h)	0	0	0	212	1	304	143	509	0	0	702	95
Initial Q (Qb), veh				0	0	0	0	0	0	0	0	0
Ped-Bike Adj(A_pbT)				1.00		0.97	1.00		1.00	1.00		0.96
Parking Bus, Adj				1.00	1.00	1.00	1.00	1.00	1.00	1.00	1.00	1.00
Work Zone On Approach					No			No			No	
Adj Sat Flow, veh/h/ln				1870	1870	1870	1870	1870	0	0	1870	1870
Adj Flow Rate, veh/h				272	1	390	152	541	0	0	816	110
Peak Hour Factor				0.78	0.78	0.78	0.94	0.94	0.94	0.86	0.86	0.86
Percent Heavy Veh, %				2	2	2	2	2	0	0	2	2
Cap, veh/h				549	2	476	188	2012	0	0	1267	171
Arrive On Green				0.31	0.31	0.31	0.11	0.57	0.00	0.00	0.40	0.40
Sat Flow, veh/h				1775	7	1540	1781	3647	0	0	3222	422
Grp Volume(v), veh/h				273	0	390	152	541	0	0	463	463
Grp Sat Flow(s),veh/h/ln				1782	0	1540	1781	1777	0	0	1777	1773
Q Serve(g_s), s				10.6	0.0	19.8	7.0	6.6	0.0	0.0	17.7	17.7
Cycle Q Clear(g_c), s				10.6	0.0	19.8	7.0	6.6	0.0	0.0	17.7	17.7
Prop In Lane				1.00		1.00	1.00		0.00	0.00		0.24
Lane Grp Cap(c), veh/h				551	0	476	188	2012	0	0	720	718
V/C Ratio(X)				0.50	0.00	0.82	0.81	0.27	0.00	0.00	0.64	0.64
Avail Cap(c_a), veh/h				821	0	709	407	2971	0	0	980	978
HCM Platoon Ratio				1.00	1.00	1.00	1.00	1.00	1.00	1.00	1.00	1.00
Upstream Filter(I)				1.00	0.00	1.00	1.00	1.00	0.00	0.00	1.00	1.00
Uniform Delay (d), s/veh				23.8	0.0	27.0	36.9	9.4	0.0	0.0	20.2	20.2
Incr Delay (d2), s/veh				0.7	0.0	4.7	3.1	0.3	0.0	0.0	3.5	3.5
Initial Q Delay(d3),s/veh				0.0	0.0	0.0	0.0	0.0	0.0	0.0	0.0	0.0
%ile BackOfQ(50%),veh/ln				4.4	0.0	7.6	3.1	2.3	0.0	0.0	7.4	7.3
Unsig. Movement Delay, s/veh												
LnGrp Delay(d),s/veh				24.5	0.0	31.7	40.1	9.6	0.0	0.0	23.7	23.7
LnGrp LOS				C	A	C	D	A	A	A	C	C
Approach Vol, veh/h					663			693			926	
Approach Delay, s/veh					28.7			16.3			23.7	
Approach LOS					C			B			C	

Timer - Assigned Phs	1	2		4		6						
Phs Duration (G+Y+Rc), s	13.6	39.6		31.2		53.2						
Change Period (Y+Rc), s	* 4.7	5.4		5.1		5.4						
Max Green Setting (Gmax), s	* 13	46.6		38.9		70.6						
Max Q Clear Time (g_c+I1), s	9.0	19.7		21.8		8.6						
Green Ext Time (p_c), s	0.1	14.5		3.0		10.6						

Intersection Summary	
HCM 6th Ctrl Delay	22.9
HCM 6th LOS	C

Notes

* HCM 6th computational engine requires equal clearance times for the phases crossing the barrier.



Movement	EBL	EBT	EBR	WBL	WBT	WBR	NBL	NBT	NBR	SBL	SBT	SBR
Lane Configurations												
Traffic Volume (veh/h)	74	1	211	0	0	0	0	578	154	234	680	0
Future Volume (veh/h)	74	1	211	0	0	0	0	578	154	234	680	0
Initial Q (Qb), veh	0	0	0				0	0	0	0	0	0
Ped-Bike Adj(A_pbT)	1.00		0.97				1.00		0.95	1.00		1.00
Parking Bus, Adj	1.00	1.00	1.00				1.00	1.00	1.00	1.00	1.00	1.00
Work Zone On Approach		No						No			No	
Adj Sat Flow, veh/h/ln	1870	1870	1870				0	1870	1870	1870	1870	0
Adj Flow Rate, veh/h	123	2	352				0	649	173	269	782	0
Peak Hour Factor	0.60	0.60	0.60				0.89	0.89	0.89	0.87	0.87	0.87
Percent Heavy Veh, %	2	2	2				0	2	2	2	2	0
Cap, veh/h	142	2	406				0	1045	443	312	1872	0
Arrive On Green	0.34	0.34	0.34				0.00	0.29	0.29	0.17	0.53	0.00
Sat Flow, veh/h	412	7	1180				0	3647	1507	1781	3647	0
Grp Volume(v), veh/h	477	0	0				0	649	173	269	782	0
Grp Sat Flow(s),veh/h/ln	1599	0	0				0	1777	1507	1781	1777	0
Q Serve(g_s), s	22.7	0.0	0.0				0.0	12.8	7.4	11.9	10.9	0.0
Cycle Q Clear(g_c), s	22.7	0.0	0.0				0.0	12.8	7.4	11.9	10.9	0.0
Prop In Lane	0.26		0.74				0.00		1.00	1.00		0.00
Lane Grp Cap(c), veh/h	550	0	0				0	1045	443	312	1872	0
V/C Ratio(X)	0.87	0.00	0.00				0.00	0.62	0.39	0.86	0.42	0.00
Avail Cap(c_a), veh/h	865	0	0				0	1376	584	642	2861	0
HCM Platoon Ratio	1.00	1.00	1.00				1.00	1.00	1.00	1.00	1.00	1.00
Upstream Filter(I)	1.00	0.00	0.00				0.00	1.00	1.00	1.00	1.00	0.00
Uniform Delay (d), s/veh	24.9	0.0	0.0				0.0	24.8	22.9	32.6	11.7	0.0
Incr Delay (d2), s/veh	5.8	0.0	0.0				0.0	2.2	2.0	2.8	0.5	0.0
Initial Q Delay(d3),s/veh	0.0	0.0	0.0				0.0	0.0	0.0	0.0	0.0	0.0
%ile BackOfQ(50%),veh/ln	9.0	0.0	0.0				0.0	5.3	2.7	5.1	3.8	0.0
Unsig. Movement Delay, s/veh												
LnGrp Delay(d),s/veh	30.7	0.0	0.0				0.0	27.0	24.9	35.4	12.2	0.0
LnGrp LOS	C	A	A				A	C	C	D	B	A
Approach Vol, veh/h		477						822			1051	
Approach Delay, s/veh		30.7						26.5			18.2	
Approach LOS		C						C			B	

Timer - Assigned Phs		2			5	6		8				
Phs Duration (G+Y+Rc), s		48.3			18.9	29.3		33.1				
Change Period (Y+Rc), s		5.4			* 4.7	5.4		5.1				
Max Green Setting (Gmax), s		65.5			* 29	31.5		44.0				
Max Q Clear Time (g_c+I1), s		12.9			13.9	14.8		24.7				
Green Ext Time (p_c), s		16.7			0.3	9.1		3.3				

Intersection Summary			
HCM 6th Ctrl Delay			23.6
HCM 6th LOS			C

Notes

* HCM 6th computational engine requires equal clearance times for the phases crossing the barrier.



Movement	EBL	EBT	EBR	WBL	WBT	WBR	NBL	NBT	NBR	SBL	SBT	SBR
Lane Configurations												
Traffic Volume (veh/h)	0	0	0	89	2	123	0	453	157	0	347	82
Future Volume (veh/h)	0	0	0	89	2	123	0	453	157	0	347	82
Initial Q (Qb), veh				0	0	0	0	0	0	0	0	0
Ped-Bike Adj(A_pbT)				1.00		0.96	1.00		0.96	1.00		0.96
Parking Bus, Adj				1.00	1.00	1.00	1.00	1.00	1.00	1.00	1.00	1.00
Work Zone On Approach					No			No			No	
Adj Sat Flow, veh/h/ln				1870	1870	1870	0	1870	1870	0	1870	1870
Adj Flow Rate, veh/h				120	3	166	0	527	183	0	418	99
Peak Hour Factor				0.74	0.74	0.74	0.86	0.86	0.86	0.83	0.83	0.83
Percent Heavy Veh, %				2	2	2	0	2	2	0	2	2
Cap, veh/h				383	10	336	0	1430	612	0	1659	377
Arrive On Green				0.22	0.22	0.22	0.00	0.40	0.40	0.00	0.40	0.40
Sat Flow, veh/h				1740	43	1529	0	3647	1520	0	4289	937
Grp Volume(v), veh/h				123	0	166	0	527	183	0	342	175
Grp Sat Flow(s),veh/h/ln				1783	0	1529	0	1777	1520	0	1702	1654
Q Serve(g_s), s				1.9	0.0	3.1	0.0	3.4	2.7	0.0	2.2	2.3
Cycle Q Clear(g_c), s				1.9	0.0	3.1	0.0	3.4	2.7	0.0	2.2	2.3
Prop In Lane				0.98		1.00	0.00		1.00	0.00		0.57
Lane Grp Cap(c), veh/h				392	0	336	0	1430	612	0	1370	666
V/C Ratio(X)				0.31	0.00	0.49	0.00	0.37	0.30	0.00	0.25	0.26
Avail Cap(c_a), veh/h				2580	0	2212	0	6396	2735	0	6126	2977
HCM Platoon Ratio				1.00	1.00	1.00	1.00	1.00	1.00	1.00	1.00	1.00
Upstream Filter(I)				1.00	0.00	1.00	0.00	1.00	1.00	0.00	1.00	1.00
Uniform Delay (d), s/veh				10.8	0.0	11.3	0.0	6.9	6.7	0.0	6.6	6.6
Incr Delay (d2), s/veh				0.5	0.0	1.1	0.0	0.2	0.3	0.0	0.1	0.2
Initial Q Delay(d3),s/veh				0.0	0.0	0.0	0.0	0.0	0.0	0.0	0.0	0.0
%ile BackOfQ(50%),veh/ln				0.6	0.0	0.9	0.0	0.7	0.5	0.0	0.4	0.5
Unsig. Movement Delay, s/veh												
LnGrp Delay(d),s/veh				11.3	0.0	12.4	0.0	7.1	7.0	0.0	6.7	6.8
LnGrp LOS				B	A	B	A	A	A	A	A	A
Approach Vol, veh/h					289			710			517	
Approach Delay, s/veh					11.9			7.1			6.7	
Approach LOS					B			A			A	

Timer - Assigned Phs	2		6		8			
Phs Duration (G+Y+Rc), s	19.7		19.7		13.4			
Change Period (Y+Rc), s	6.4		6.4		6.1			
Max Green Setting (Gmax), s	59.6		59.6		47.9			
Max Q Clear Time (g_c+I1), s	5.4		4.3		5.1			
Green Ext Time (p_c), s	4.4		3.5		1.4			

Intersection Summary		
HCM 6th Ctrl Delay		7.9
HCM 6th LOS		A



Movement	EBL	EBT	EBR	WBL	WBT	WBR	NBL	NBT	NBR	SBL	SBT	SBR
Lane Configurations												
Traffic Volume (veh/h)	83	2	168	0	0	0	0	527	51	70	366	0
Future Volume (veh/h)	83	2	168	0	0	0	0	527	51	70	366	0
Initial Q (Qb), veh	0	0	0				0	0	0	0	0	0
Ped-Bike Adj(A_pbT)	1.00		0.94				1.00		0.95	1.00		1.00
Parking Bus, Adj	1.00	1.00	1.00				1.00	1.00	1.00	1.00	1.00	1.00
Work Zone On Approach		No						No			No	
Adj Sat Flow, veh/h/ln	1870	1870	1870				0	1870	1870	1870	1870	0
Adj Flow Rate, veh/h	100	2	202				0	613	59	96	501	0
Peak Hour Factor	0.83	0.83	0.83				0.86	0.86	0.86	0.73	0.73	0.73
Percent Heavy Veh, %	2	2	2				0	2	2	2	2	0
Cap, veh/h	332	7	495				0	1148	488	139	1881	0
Arrive On Green	0.19	0.19	0.19				0.00	0.32	0.32	0.08	0.53	0.00
Sat Flow, veh/h	1748	35	2609				0	3647	1511	1781	3647	0
Grp Volume(v), veh/h	102	0	202				0	613	59	96	501	0
Grp Sat Flow(s),veh/h/ln	1783	0	1304				0	1777	1511	1781	1777	0
Q Serve(g_s), s	2.2	0.0	3.0				0.0	6.3	1.2	2.3	3.4	0.0
Cycle Q Clear(g_c), s	2.2	0.0	3.0				0.0	6.3	1.2	2.3	3.4	0.0
Prop In Lane	0.98		1.00				0.00		1.00	1.00		0.00
Lane Grp Cap(c), veh/h	338	0	495				0	1148	488	139	1881	0
V/C Ratio(X)	0.30	0.00	0.41				0.00	0.53	0.12	0.69	0.27	0.00
Avail Cap(c_a), veh/h	1520	0	2223				0	3484	1482	813	5562	0
HCM Platoon Ratio	1.00	1.00	1.00				1.00	1.00	1.00	1.00	1.00	1.00
Upstream Filter(I)	1.00	0.00	1.00				0.00	1.00	1.00	1.00	1.00	0.00
Uniform Delay (d), s/veh	15.5	0.0	15.8				0.0	12.3	10.6	20.0	5.7	0.0
Incr Delay (d2), s/veh	0.5	0.0	0.5				0.0	0.4	0.1	6.0	0.1	0.0
Initial Q Delay(d3),s/veh	0.0	0.0	0.0				0.0	0.0	0.0	0.0	0.0	0.0
%ile BackOfQ(50%),veh/ln	0.8	0.0	0.8				0.0	1.9	0.3	1.0	0.7	0.0
Unsig. Movement Delay, s/veh												
LnGrp Delay(d),s/veh	16.0	0.0	16.4				0.0	12.7	10.7	25.9	5.8	0.0
LnGrp LOS	B	A	B				A	B	B	C	A	A
Approach Vol, veh/h		304						672			597	
Approach Delay, s/veh		16.2						12.5			9.0	
Approach LOS		B						B			A	

Timer - Assigned Phs	1	2	4	6
Phs Duration (G+Y+Rc), s	9.2	20.8	14.5	29.9
Change Period (Y+Rc), s	* 5.7	6.4	6.1	6.4
Max Green Setting (Gmax), s	* 3.5	43.6	37.9	69.6
Max Q Clear Time (g_c+I1), s	4.3	8.3	5.0	5.4
Green Ext Time (p_c), s	0.2	4.5	1.5	3.5

Intersection Summary	
HCM 6th Ctrl Delay	11.9
HCM 6th LOS	B

Notes

* HCM 6th computational engine requires equal clearance times for the phases crossing the barrier.



Movement	EBL	EBT	EBR	WBL	WBT	WBR	NBL	NBT	NBR	SBL	SBT	SBR
Lane Configurations												
Traffic Volume (veh/h)	69	86	32	2	86	58	53	78	1	114	65	30
Future Volume (veh/h)	69	86	32	2	86	58	53	78	1	114	65	30
Initial Q (Qb), veh	0	0	0	0	0	0	0	0	0	0	0	0
Ped-Bike Adj(A_pbT)	1.00		0.96	1.00		0.95	1.00		0.98	1.00		0.96
Parking Bus, Adj	1.00	1.00	1.00	1.00	1.00	1.00	1.00	1.00	1.00	1.00	1.00	1.00
Work Zone On Approach		No			No			No			No	
Adj Sat Flow, veh/h/ln	1870	1870	1870	1870	1870	1870	1870	1870	1870	1870	1870	1870
Adj Flow Rate, veh/h	87	109	41	3	115	77	74	108	1	211	120	56
Peak Hour Factor	0.79	0.79	0.79	0.75	0.75	0.75	0.72	0.72	0.72	0.54	0.54	0.54
Percent Heavy Veh, %	2	2	2	2	2	2	2	2	2	2	2	2
Cap, veh/h	112	341	278	7	231	185	95	1436	625	251	1167	510
Arrive On Green	0.06	0.18	0.18	0.00	0.12	0.12	0.05	0.40	0.40	0.14	0.49	0.49
Sat Flow, veh/h	1781	1870	1522	1781	1870	1501	1781	3554	1546	1781	2374	1038
Grp Volume(v), veh/h	87	109	41	3	115	77	74	108	1	211	88	88
Grp Sat Flow(s),veh/h/ln	1781	1870	1522	1781	1870	1501	1781	1777	1546	1781	1777	1636
Q Serve(g_s), s	3.5	3.7	1.6	0.1	4.1	3.4	3.0	1.3	0.0	8.3	1.9	2.1
Cycle Q Clear(g_c), s	3.5	3.7	1.6	0.1	4.1	3.4	3.0	1.3	0.0	8.3	1.9	2.1
Prop In Lane	1.00		1.00	1.00		1.00	1.00		1.00	1.00		0.63
Lane Grp Cap(c), veh/h	112	341	278	7	231	185	95	1436	625	251	873	804
V/C Ratio(X)	0.78	0.32	0.15	0.42	0.50	0.42	0.78	0.08	0.00	0.84	0.10	0.11
Avail Cap(c_a), veh/h	259	932	758	123	789	633	242	1436	625	256	873	804
HCM Platoon Ratio	1.00	1.00	1.00	1.00	1.00	1.00	1.00	1.00	1.00	1.00	1.00	1.00
Upstream Filter(I)	1.00	1.00	1.00	1.00	1.00	1.00	1.00	1.00	1.00	1.00	1.00	1.00
Uniform Delay (d), s/veh	33.4	25.6	24.8	35.9	29.6	29.3	33.8	13.2	12.8	30.2	9.8	9.9
Incr Delay (d2), s/veh	4.3	0.5	0.2	13.6	1.7	1.5	5.0	0.1	0.0	19.9	0.2	0.3
Initial Q Delay(d3),s/veh	0.0	0.0	0.0	0.0	0.0	0.0	0.0	0.0	0.0	0.0	0.0	0.0
%ile BackOfQ(50%),veh/ln	1.6	1.6	0.6	0.1	1.9	1.3	1.4	0.5	0.0	4.8	0.7	0.7
Unsig. Movement Delay, s/veh												
LnGrp Delay(d),s/veh	37.6	26.2	25.1	49.5	31.2	30.7	38.8	13.3	12.8	50.1	10.1	10.1
LnGrp LOS	D	C	C	D	C	C	D	B	B	D	B	B
Approach Vol, veh/h		237			195			183			387	
Approach Delay, s/veh		30.2			31.3			23.6			31.9	
Approach LOS		C			C			C			C	

Timer - Assigned Phs	1	2	3	4	5	6	7	8
Phs Duration (G+Y+Rc), s	8.5	40.6	9.2	14.0	14.8	34.3	4.9	18.3
Change Period (Y+Rc), s	4.6	5.1	4.6	5.1	4.6	5.1	4.6	5.1
Max Green Setting (Gmax), s	3.9	29.8	10.5	30.5	10.4	29.2	5.0	36.0
Max Q Clear Time (g_c+I1), s	5.5	4.1	5.5	6.1	10.3	3.3	2.1	5.7
Green Ext Time (p_c), s	0.0	1.4	0.0	0.9	0.0	0.8	0.0	0.7

Intersection Summary	
HCM 6th Ctrl Delay	29.9
HCM 6th LOS	C



Movement	EBL	EBT	EBR	WBL	WBT	WBR	NBL	NBT	NBR	SBL	SBT	SBR
Lane Configurations												
Traffic Volume (veh/h)	136	74	67	42	59	168	64	300	60	349	387	179
Future Volume (veh/h)	136	74	67	42	59	168	64	300	60	349	387	179
Initial Q (Qb), veh	0	0	0	0	0	0	0	0	0	0	0	0
Ped-Bike Adj(A_pbT)	1.00		0.96	1.00		0.95	1.00		0.96	1.00		0.97
Parking Bus, Adj	1.00	1.00	1.00	1.00	1.00	1.00	1.00	1.00	1.00	1.00	1.00	1.00
Work Zone On Approach		No			No			No			No	
Adj Sat Flow, veh/h/ln	1870	1870	1870	1870	1870	1870	1870	1870	1870	1870	1870	1870
Adj Flow Rate, veh/h	179	97	88	51	71	202	74	349	70	436	484	224
Peak Hour Factor	0.76	0.76	0.76	0.83	0.83	0.83	0.86	0.86	0.86	0.80	0.80	0.80
Percent Heavy Veh, %	2	2	2	2	2	2	2	2	2	2	2	2
Cap, veh/h	280	294	238	268	282	603	121	589	117	421	881	405
Arrive On Green	0.16	0.16	0.16	0.15	0.15	0.15	0.07	0.20	0.20	0.24	0.38	0.38
Sat Flow, veh/h	1781	1870	1515	1781	1870	1513	1781	2935	581	1781	2343	1077
Grp Volume(v), veh/h	179	97	88	51	71	202	74	209	210	436	366	342
Grp Sat Flow(s),veh/h/ln	1781	1870	1515	1781	1870	1513	1781	1777	1739	1781	1777	1643
Q Serve(g_s), s	9.8	4.8	5.4	2.6	3.5	9.8	4.2	11.1	11.4	24.6	16.9	17.1
Cycle Q Clear(g_c), s	9.8	4.8	5.4	2.6	3.5	9.8	4.2	11.1	11.4	24.6	16.9	17.1
Prop In Lane	1.00		1.00	1.00		1.00	1.00		0.33	1.00		0.66
Lane Grp Cap(c), veh/h	280	294	238	268	282	603	121	357	349	421	668	618
V/C Ratio(X)	0.64	0.33	0.37	0.19	0.25	0.34	0.61	0.59	0.60	1.04	0.55	0.55
Avail Cap(c_a), veh/h	565	593	480	616	647	898	219	511	500	421	727	673
HCM Platoon Ratio	1.00	1.00	1.00	1.00	1.00	1.00	1.00	1.00	1.00	1.00	1.00	1.00
Upstream Filter(I)	1.00	1.00	1.00	1.00	1.00	1.00	1.00	1.00	1.00	1.00	1.00	1.00
Uniform Delay (d), s/veh	41.1	39.0	39.2	38.6	39.0	22.6	47.2	37.7	37.8	39.7	25.5	25.6
Incr Delay (d2), s/veh	3.4	0.9	1.4	0.1	0.2	0.1	1.9	5.5	5.9	53.3	2.5	2.8
Initial Q Delay(d3),s/veh	0.0	0.0	0.0	0.0	0.0	0.0	0.0	0.0	0.0	0.0	0.0	0.0
%ile BackOfQ(50%),veh/ln	4.4	2.2	2.1	1.1	1.6	3.4	1.9	5.2	5.3	16.6	7.2	6.8
Unsig. Movement Delay, s/veh												
LnGrp Delay(d),s/veh	44.5	39.9	40.6	38.8	39.2	22.7	49.0	43.1	43.7	93.0	28.1	28.4
LnGrp LOS	D	D	D	D	D	C	D	D	D	F	C	C
Approach Vol, veh/h		364			324			493			1144	
Approach Delay, s/veh		42.3			28.8			44.3			52.9	
Approach LOS		D			C			D			D	

Timer - Assigned Phs	1	2		4	5	6		8
Phs Duration (G+Y+Rc), s	11.8	46.4		22.1	30.0	28.2		23.8
Change Period (Y+Rc), s	* 4.7	* 7.3		6.4	5.4	7.3		7.4
Max Green Setting (Gmax), s	* 13	* 43		36.0	24.6	29.9		33.0
Max Q Clear Time (g_c+I1), s	6.2	19.1		11.8	26.6	13.4		11.8
Green Ext Time (p_c), s	0.0	10.2		0.6	0.0	4.7		1.9

Intersection Summary	
HCM 6th Ctrl Delay	46.1
HCM 6th LOS	D

Notes

* HCM 6th computational engine requires equal clearance times for the phases crossing the barrier.

Intersection	
Int Delay, s/veh	0.9

Movement	EBL	EBR	NBL	NBT	SBT	SBR
Lane Configurations						
Traffic Vol, veh/h	4	91	94	620	358	10
Future Vol, veh/h	4	91	94	620	358	10
Conflicting Peds, #/hr	10	10	10	0	0	10
Sign Control	Free	Free	Free	Free	Stop	Stop
RT Channelized	-	None	-	None	-	None
Storage Length	0	-	-	-	-	-
Veh in Median Storage, #	2	-	-	0	0	-
Grade, %	0	-	-	0	0	-
Peak Hour Factor	63	63	70	70	75	75
Heavy Vehicles, %	2	2	2	2	2	2
Mvmt Flow	6	144	134	886	477	13

Major/Minor	Major1		Minor2	
Conflicting Flow All	10	0	1164	20
Stage 1	-	-	10	-
Stage 2	-	-	1154	-
Critical Hdwy	4.14	-	6.54	6.94
Critical Hdwy Stg 1	-	-	-	-
Critical Hdwy Stg 2	-	-	5.54	-
Follow-up Hdwy	2.22	-	4.02	3.32
Pot Cap-1 Maneuver	1608	-	~ 193	1053
Stage 1	-	-	-	-
Stage 2	-	-	~ 270	-
Platoon blocked, %		-		
Mov Cap-1 Maneuver	1593	-	0	1033
Mov Cap-2 Maneuver	-	-	0	-
Stage 1	-	-	0	-
Stage 2	-	-	0	-

Approach	NB	SB
HCM Control Delay, s	1.4	
HCM LOS		-

Minor Lane/Major Mvmt	NBL	NBT	SBLn1	SBLn2
Capacity (veh/h)	1593	-	-	1033
HCM Lane V/C Ratio	0.084	-	-	0.244
HCM Control Delay (s)	7.5	0.5	-	9.6
HCM Lane LOS	A	A	-	A
HCM 95th %tile Q(veh)	0.3	-	-	1

Notes			
~: Volume exceeds capacity	$: Delay exceeds 300s	+: Computation Not Defined	*: All major volume in platoon

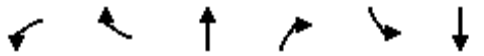

Movement	WBL	WBR	NBT	NBR	SBL	SBT
Lane Configurations						
Traffic Volume (veh/h)	11	65	394	50	72	212
Future Volume (veh/h)	11	65	394	50	72	212
Initial Q (Qb), veh	0	0	0	0	0	0
Ped-Bike Adj(A_pbT)	1.00	1.00		0.96	1.00	
Parking Bus, Adj	1.00	1.00	1.00	1.00	1.00	1.00
Work Zone On Approach	No		No			No
Adj Sat Flow, veh/h/ln	1870	1870	1870	1870	1870	1870
Adj Flow Rate, veh/h	12	71	505	64	84	247
Peak Hour Factor	0.91	0.91	0.78	0.78	0.86	0.86
Percent Heavy Veh, %	2	2	2	2	2	2
Cap, veh/h	150	133	1291	163	201	1161
Arrive On Green	0.08	0.08	0.41	0.41	0.11	0.62
Sat Flow, veh/h	1781	1585	3251	398	1781	1870
Grp Volume(v), veh/h	12	71	283	286	84	247
Grp Sat Flow(s),veh/h/ln	1781	1585	1777	1779	1781	1870
Q Serve(g_s), s	0.3	2.0	5.3	5.4	2.1	2.7
Cycle Q Clear(g_c), s	0.3	2.0	5.3	5.4	2.1	2.7
Prop In Lane	1.00	1.00		0.22	1.00	
Lane Grp Cap(c), veh/h	150	133	726	727	201	1161
V/C Ratio(X)	0.08	0.53	0.39	0.39	0.42	0.21
Avail Cap(c_a), veh/h	1044	929	2704	2707	1175	4321
HCM Platoon Ratio	1.00	1.00	1.00	1.00	1.00	1.00
Upstream Filter(I)	1.00	1.00	1.00	1.00	1.00	1.00
Uniform Delay (d), s/veh	20.0	20.8	9.9	9.9	19.6	3.9
Incr Delay (d2), s/veh	0.2	3.3	1.2	1.3	0.5	0.3
Initial Q Delay(d3),s/veh	0.0	0.0	0.0	0.0	0.0	0.0
%ile BackOfQ(50%),veh/ln	0.1	0.1	1.7	1.8	0.8	0.6
Unsig. Movement Delay, s/veh						
LnGrp Delay(d),s/veh	20.3	24.1	11.1	11.1	20.1	4.3
LnGrp LOS	C	C	B	B	C	A
Approach Vol, veh/h	83		569			331
Approach Delay, s/veh	23.5		11.1			8.3
Approach LOS	C		B			A

Timer - Assigned Phs		2		4	5	6
Phs Duration (G+Y+Rc), s		37.3		10.2	10.1	27.2
Change Period (Y+Rc), s		* 7.8		6.2	* 4.7	7.8
Max Green Setting (Gmax), s		* 1.1E2		27.8	* 31	72.2
Max Q Clear Time (g_c+I1), s		4.7		4.0	4.1	7.4
Green Ext Time (p_c), s		4.2		0.2	0.1	10.6

Intersection Summary	
HCM 6th Ctrl Delay	11.2
HCM 6th LOS	B

Notes

* HCM 6th computational engine requires equal clearance times for the phases crossing the barrier.

Intersection	
Int Delay, s/veh	2.5

Movement	EBT	EBR	WBL	WBT	NBL	NBR
Lane Configurations						
Traffic Vol, veh/h	74	13	11	127	24	40
Future Vol, veh/h	74	13	11	127	24	40
Conflicting Peds, #/hr	0	10	10	0	10	10
Sign Control	Free	Free	Free	Free	Stop	Stop
RT Channelized	-	None	-	None	-	None
Storage Length	-	-	-	-	0	-
Veh in Median Storage, #	0	-	-	0	0	-
Grade, %	0	-	-	0	0	-
Peak Hour Factor	91	91	57	57	70	70
Heavy Vehicles, %	2	2	2	2	2	2
Mvmt Flow	81	14	19	223	34	57

Major/Minor	Major1		Major2		Minor1	
Conflicting Flow All	0	0	105	0	369	108
Stage 1	-	-	-	-	98	-
Stage 2	-	-	-	-	271	-
Critical Hdwy	-	-	4.12	-	6.42	6.22
Critical Hdwy Stg 1	-	-	-	-	5.42	-
Critical Hdwy Stg 2	-	-	-	-	5.42	-
Follow-up Hdwy	-	-	2.218	-	3.518	3.318
Pot Cap-1 Maneuver	-	-	1486	-	631	946
Stage 1	-	-	-	-	926	-
Stage 2	-	-	-	-	775	-
Platoon blocked, %	-	-		-		
Mov Cap-1 Maneuver	-	-	1472	-	609	928
Mov Cap-2 Maneuver	-	-	-	-	609	-
Stage 1	-	-	-	-	917	-
Stage 2	-	-	-	-	756	-

Approach	EB	WB	NB
HCM Control Delay, s	0	0.6	10.3
HCM LOS			B

Minor Lane/Major Mvmt	NBLn1	EBT	EBR	WBL	WBT
Capacity (veh/h)	776	-	-	1472	-
HCM Lane V/C Ratio	0.118	-	-	0.013	-
HCM Control Delay (s)	10.3	-	-	7.5	0
HCM Lane LOS	B	-	-	A	A
HCM 95th %tile Q(veh)	0.4	-	-	0	-

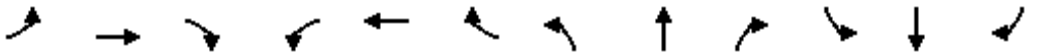

Movement	EBL	EBT	EBR	WBL	WBT	WBR	NBL	NBT	NBR	SBL	SBT	SBR
Lane Configurations												
Traffic Volume (veh/h)	44	45	25	5	47	79	28	409	11	92	215	67
Future Volume (veh/h)	44	45	25	5	47	79	28	409	11	92	215	67
Initial Q (Qb), veh	0	0	0	0	0	0	0	0	0	0	0	0
Ped-Bike Adj(A_pbT)	1.00		0.97	1.00		1.00	1.00		0.97	1.00		0.97
Parking Bus, Adj	1.00	1.00	1.00	1.00	1.00	1.00	1.00	1.00	1.00	1.00	1.00	1.00
Work Zone On Approach		No			No			No			No	
Adj Sat Flow, veh/h/ln	1870	1870	1870	1870	1870	1870	1870	1870	1870	1870	1870	1870
Adj Flow Rate, veh/h	46	47	26	6	59	0	33	481	13	119	279	87
Peak Hour Factor	0.95	0.95	0.95	0.80	0.80	0.80	0.85	0.85	0.85	0.77	0.77	0.77
Percent Heavy Veh, %	2	2	2	2	2	2	2	2	2	2	2	2
Cap, veh/h	84	542	273	14	714		65	955	413	159	856	261
Arrive On Green	0.05	0.24	0.24	0.01	0.20	0.00	0.04	0.27	0.27	0.09	0.32	0.32
Sat Flow, veh/h	1781	2259	1137	1781	3554	1585	1781	3554	1536	1781	2663	811
Grp Volume(v), veh/h	46	36	37	6	59	0	33	481	13	119	184	182
Grp Sat Flow(s),veh/h/ln	1781	1777	1619	1781	1777	1585	1781	1777	1536	1781	1777	1697
Q Serve(g_s), s	1.3	0.8	0.9	0.2	0.7	0.0	0.9	5.8	0.3	3.3	4.0	4.2
Cycle Q Clear(g_c), s	1.3	0.8	0.9	0.2	0.7	0.0	0.9	5.8	0.3	3.3	4.0	4.2
Prop In Lane	1.00		0.70	1.00		1.00	1.00		1.00	1.00		0.48
Lane Grp Cap(c), veh/h	84	426	388	14	714		65	955	413	159	571	546
V/C Ratio(X)	0.55	0.08	0.10	0.42	0.08		0.51	0.50	0.03	0.75	0.32	0.33
Avail Cap(c_a), veh/h	538	1564	1425	258	2570		433	3427	1481	992	2271	2169
HCM Platoon Ratio	1.00	1.00	1.00	1.00	1.00	1.00	1.00	1.00	1.00	1.00	1.00	1.00
Upstream Filter(I)	1.00	1.00	1.00	1.00	1.00	0.00	1.00	1.00	1.00	1.00	1.00	1.00
Uniform Delay (d), s/veh	23.8	15.0	15.1	25.2	16.6	0.0	24.1	15.8	13.8	22.7	13.1	13.2
Incr Delay (d2), s/veh	5.5	0.1	0.1	18.6	0.0	0.0	6.0	0.4	0.0	6.8	0.3	0.4
Initial Q Delay(d3),s/veh	0.0	0.0	0.0	0.0	0.0	0.0	0.0	0.0	0.0	0.0	0.0	0.0
%ile BackOfQ(50%),veh/ln	0.6	0.3	0.3	0.1	0.2	0.0	0.5	2.0	0.1	1.5	1.3	1.3
Unsig. Movement Delay, s/veh												
LnGrp Delay(d),s/veh	29.3	15.1	15.2	43.8	16.6	0.0	30.1	16.2	13.8	29.4	13.4	13.5
LnGrp LOS	C	B	B	D	B		C	B	B	C	B	B
Approach Vol, veh/h		119			65	A		527			485	
Approach Delay, s/veh		20.6			19.1			17.0			17.4	
Approach LOS		C			B			B			B	

Timer - Assigned Phs	1	2	3	4	5	6	7	8
Phs Duration (G+Y+Rc), s	9.2	19.5	5.0	17.3	6.5	22.2	7.0	15.4
Change Period (Y+Rc), s	4.6	5.8	4.6	5.1	4.6	5.8	4.6	5.1
Max Green Setting (Gmax), s	28.4	49.2	7.4	44.9	12.4	65.2	15.4	36.9
Max Q Clear Time (g_c+I1), s	5.3	7.8	2.2	2.9	2.9	6.2	3.3	2.7
Green Ext Time (p_c), s	0.3	3.3	0.0	0.4	0.0	2.2	0.0	0.3

Intersection Summary	
HCM 6th Ctrl Delay	17.6
HCM 6th LOS	B

Notes

Unsignalized Delay for [WBR] is excluded from calculations of the approach delay and intersection delay.

Intersection	
Intersection Delay, s/veh	63.4
Intersection LOS	F

Movement	EBL	EBT	EBR	WBL	WBT	WBR	NBL	NBT	NBR	SBL	SBT	SBR
Lane Configurations												
Traffic Vol, veh/h	119	144	24	30	216	21	45	115	95	56	45	205
Future Vol, veh/h	119	144	24	30	216	21	45	115	95	56	45	205
Peak Hour Factor	0.69	0.69	0.69	0.73	0.73	0.73	0.67	0.67	0.67	0.77	0.77	0.77
Heavy Vehicles, %	2	2	2	2	2	2	2	2	2	2	2	2
Mvmt Flow	172	209	35	41	296	29	67	172	142	73	58	266
Number of Lanes	0	1	1	0	1	0	0	1	0	0	1	1

Approach	EB	WB	NB	SB
Opposing Approach	WB	EB	SB	NB
Opposing Lanes	1	2	2	1
Conflicting Approach Left	SB	NB	EB	WB
Conflicting Lanes Left	2	1	2	1
Conflicting Approach Right	NB	SB	WB	EB
Conflicting Lanes Right	1	2	1	2
HCM Control Delay	74.7	75.7	79.3	25.2
HCM LOS	F	F	F	D

Lane	NBLn1	EBLn1	EBLn2	WBLn1	SBLn1	SBLn2
Vol Left, %	18%	45%	0%	11%	55%	0%
Vol Thru, %	45%	55%	0%	81%	45%	0%
Vol Right, %	37%	0%	100%	8%	0%	100%
Sign Control	Stop	Stop	Stop	Stop	Stop	Stop
Traffic Vol by Lane	255	263	24	267	101	205
LT Vol	45	119	0	30	56	0
Through Vol	115	144	0	216	45	0
RT Vol	95	0	24	21	0	205
Lane Flow Rate	381	381	35	366	131	266
Geometry Grp	6	7	7	6	7	7
Degree of Util (X)	1.002	1.007	0.083	0.984	0.365	0.665
Departure Headway (Hd)	9.703	9.714	8.746	9.919	10.245	9.219
Convergence, Y/N	Yes	Yes	Yes	Yes	Yes	Yes
Cap	377	377	412	369	353	394
Service Time	7.703	7.414	6.446	7.919	7.945	6.919
HCM Lane V/C Ratio	1.011	1.011	0.085	0.992	0.371	0.675
HCM Control Delay	79.3	80.4	12.2	75.7	18.7	28.4
HCM Lane LOS	F	F	B	F	C	D
HCM 95th-tile Q	11.9	12	0.3	11.2	1.6	4.6

Intersection	
Intersection Delay, s/veh	81.7
Intersection LOS	F

Movement	EBL	EBT	EBR	WBL	WBT	WBR	NBL	NBT	NBR	SBL	SBT	SBR
Lane Configurations												
Traffic Vol, veh/h	48	225	21	0	197	96	20	161	4	117	126	50
Future Vol, veh/h	48	225	21	0	197	96	20	161	4	117	126	50
Peak Hour Factor	0.68	0.68	0.68	0.70	0.70	0.70	0.64	0.64	0.64	0.69	0.69	0.69
Heavy Vehicles, %	2	2	2	2	2	2	2	2	2	2	2	2
Mvmt Flow	71	331	31	0	281	137	31	252	6	170	183	72
Number of Lanes	0	1	0	0	1	0	0	1	0	0	1	0

Approach	EB	WB	NB	SB
Opposing Approach	WB	EB	SB	NB
Opposing Lanes	1	1	1	1
Conflicting Approach Left	SB	NB	EB	WB
Conflicting Lanes Left	1	1	1	1
Conflicting Approach Right	NB	SB	WB	EB
Conflicting Lanes Right	1	1	1	1
HCM Control Delay	98.1	82.4	40.5	92.2
HCM LOS	F	F	E	F

Lane	NBLn1	EBLn1	WBLn1	SBLn1
Vol Left, %	11%	16%	0%	40%
Vol Thru, %	87%	77%	67%	43%
Vol Right, %	2%	7%	33%	17%
Sign Control	Stop	Stop	Stop	Stop
Traffic Vol by Lane	185	294	293	293
LT Vol	20	48	0	117
Through Vol	161	225	197	126
RT Vol	4	21	96	50
Lane Flow Rate	289	432	419	425
Geometry Grp	1	1	1	1
Degree of Util (X)	0.771	1.073	1.02	1.053
Departure Headway (Hd)	10.232	9.393	9.325	9.412
Convergence, Y/N	Yes	Yes	Yes	Yes
Cap	356	389	393	391
Service Time	8.232	7.393	7.325	7.412
HCM Lane V/C Ratio	0.812	1.111	1.066	1.087
HCM Control Delay	40.5	98.1	82.4	92.2
HCM Lane LOS	E	F	F	F
HCM 95th-tile Q	6.2	14.3	12.6	13.6

Intersection	
Intersection Delay, s/veh	54.5
Intersection LOS	F

Movement	EBL	EBT	EBR	WBL	WBT	WBR	NBL	NBT	NBR	SBL	SBT	SBR
Lane Configurations												
Traffic Vol, veh/h	95	185	13	23	214	77	8	167	9	46	148	173
Future Vol, veh/h	95	185	13	23	214	77	8	167	9	46	148	173
Peak Hour Factor	0.61	0.61	0.61	0.70	0.70	0.70	0.87	0.87	0.87	0.76	0.76	0.76
Heavy Vehicles, %	2	2	2	2	2	2	2	2	2	2	2	2
Mvmt Flow	156	303	21	33	306	110	9	192	10	61	195	228
Number of Lanes	1	1	0	0	1	0	1	1	0	1	1	0

Approach	EB	WB	NB	SB
Opposing Approach	WB	EB	SB	NB
Opposing Lanes	1	2	2	2
Conflicting Approach Left	SB	NB	EB	WB
Conflicting Lanes Left	2	2	2	1
Conflicting Approach Right	NB	SB	WB	EB
Conflicting Lanes Right	2	2	1	2
HCM Control Delay	30.3	94.3	22.2	55.6
HCM LOS	D	F	C	F

Lane	NBLn1	NBLn2	EBLn1	EBLn2	WBLn1	SBLn1	SBLn2
Vol Left, %	100%	0%	100%	0%	7%	100%	0%
Vol Thru, %	0%	95%	0%	93%	68%	0%	46%
Vol Right, %	0%	5%	0%	7%	25%	0%	54%
Sign Control	Stop	Stop	Stop	Stop	Stop	Stop	Stop
Traffic Vol by Lane	8	176	95	198	314	46	321
LT Vol	8	0	95	0	23	46	0
Through Vol	0	167	0	185	214	0	148
RT Vol	0	9	0	13	77	0	173
Lane Flow Rate	9	202	156	325	449	61	422
Geometry Grp	7	7	7	7	6	7	7
Degree of Util (X)	0.025	0.521	0.394	0.772	1.071	0.151	0.952
Departure Headway (Hd)	10.311	9.746	9.501	8.932	8.594	9.399	8.482
Convergence, Y/N	Yes	Yes	Yes	Yes	Yes	Yes	Yes
Cap	349	372	382	409	422	384	431
Service Time	8.011	7.446	7.201	6.632	6.685	7.099	6.182
HCM Lane V/C Ratio	0.026	0.543	0.408	0.795	1.064	0.159	0.979
HCM Control Delay	13.3	22.6	18.2	36.1	94.3	13.8	61.6
HCM Lane LOS	B	C	C	E	F	B	F
HCM 95th-tile Q	0.1	2.9	1.8	6.5	14.9	0.5	11.1



Movement	EBL	EBT	EBR	WBL	WBT	WBR	NBL	NBT	NBR	SBL	SBT	SBR
Lane Configurations												
Traffic Volume (veh/h)	62	151	20	4	209	73	10	171	1	38	120	96
Future Volume (veh/h)	62	151	20	4	209	73	10	171	1	38	120	96
Initial Q (Qb), veh	0	0	0	0	0	0	0	0	0	0	0	0
Ped-Bike Adj(A_pbT)	0.99		0.95	0.99		0.95	1.00		0.95	1.00		0.95
Parking Bus, Adj	1.00	1.00	1.00	1.00	1.00	1.00	1.00	1.00	1.00	1.00	1.00	1.00
Work Zone On Approach		No			No			No			No	
Adj Sat Flow, veh/h/ln	1870	1870	1870	1870	1870	1870	1870	1870	1870	1870	1870	1870
Adj Flow Rate, veh/h	91	222	29	6	312	109	14	248	1	41	130	104
Peak Hour Factor	0.68	0.68	0.68	0.67	0.67	0.67	0.69	0.69	0.69	0.92	0.92	0.92
Percent Heavy Veh, %	2	2	2	2	2	2	2	2	2	2	2	2
Cap, veh/h	177	350	41	70	411	142	44	470	2	106	270	216
Arrive On Green	0.32	0.32	0.32	0.32	0.32	0.32	0.02	0.25	0.25	0.06	0.29	0.29
Sat Flow, veh/h	294	1110	130	7	1303	449	1781	1861	8	1781	938	751
Grp Volume(v), veh/h	342	0	0	427	0	0	14	0	249	41	0	234
Grp Sat Flow(s),veh/h/ln	1535	0	0	1759	0	0	1781	0	1869	1781	0	1689
Q Serve(g_s), s	0.0	0.0	0.0	0.0	0.0	0.0	0.4	0.0	6.2	1.2	0.0	6.2
Cycle Q Clear(g_c), s	10.2	0.0	0.0	11.8	0.0	0.0	0.4	0.0	6.2	1.2	0.0	6.2
Prop In Lane	0.27		0.08	0.01		0.26	1.00		0.00	1.00		0.44
Lane Grp Cap(c), veh/h	568	0	0	622	0	0	44	0	472	106	0	486
V/C Ratio(X)	0.60	0.00	0.00	0.69	0.00	0.00	0.32	0.00	0.53	0.39	0.00	0.48
Avail Cap(c_a), veh/h	2107	0	0	2451	0	0	307	0	1541	406	0	1474
HCM Platoon Ratio	1.00	1.00	1.00	1.00	1.00	1.00	1.00	1.00	1.00	1.00	1.00	1.00
Upstream Filter(I)	1.00	0.00	0.00	1.00	0.00	0.00	1.00	0.00	1.00	1.00	0.00	1.00
Uniform Delay (d), s/veh	15.9	0.0	0.0	16.7	0.0	0.0	25.9	0.0	17.4	24.4	0.0	15.9
Incr Delay (d2), s/veh	1.0	0.0	0.0	1.4	0.0	0.0	1.5	0.0	4.2	0.9	0.0	3.4
Initial Q Delay(d3),s/veh	0.0	0.0	0.0	0.0	0.0	0.0	0.0	0.0	0.0	0.0	0.0	0.0
%ile BackOfQ(50%),veh/ln	3.3	0.0	0.0	4.4	0.0	0.0	0.2	0.0	2.8	0.5	0.0	2.5
Unsig. Movement Delay, s/veh												
LnGrp Delay(d),s/veh	16.9	0.0	0.0	18.1	0.0	0.0	27.4	0.0	21.5	25.3	0.0	19.3
LnGrp LOS	B	A	A	B	A	A	C	A	C	C	A	B
Approach Vol, veh/h		342			427			263			275	
Approach Delay, s/veh		16.9			18.1			21.9			20.2	
Approach LOS		B			B			C			C	

Timer - Assigned Phs	1	2		4	5	6		8
Phs Duration (G+Y+Rc), s	6.0	23.4		24.5	7.9	21.5		24.5
Change Period (Y+Rc), s	* 4.7	7.9		7.5	* 4.7	* 7.9		7.5
Max Green Setting (Gmax), s	* 9.3	47.1		73.5	* 12	* 45		73.5
Max Q Clear Time (g_c+I1), s	2.4	8.2		13.8	3.2	8.2		12.2
Green Ext Time (p_c), s	0.0	4.7		3.2	0.0	4.7		2.7

Intersection Summary	
HCM 6th Ctrl Delay	19.0
HCM 6th LOS	B

Notes

* HCM 6th computational engine requires equal clearance times for the phases crossing the barrier.

Intersection	
Int Delay, s/veh	2.4

Movement	EBL	EBT	EBR	WBL	WBT	WBR	NBL	NBT	NBR	SBL	SBT	SBR
Lane Configurations		↕			↕			↕			↕	
Traffic Vol, veh/h	14	175	0	0	246	34	0	0	0	31	0	33
Future Vol, veh/h	14	175	0	0	246	34	0	0	0	31	0	33
Conflicting Peds, #/hr	10	0	10	10	0	10	10	0	10	10	0	10
Sign Control	Free	Free	Free	Free	Free	Free	Stop	Stop	Stop	Stop	Stop	Stop
RT Channelized	-	-	None	-	-	None	-	-	None	-	-	None
Storage Length	-	-	-	-	-	-	-	-	-	-	-	-
Veh in Median Storage, #	-	0	-	-	0	-	-	0	-	-	0	-
Grade, %	-	0	-	-	0	-	-	0	-	-	0	-
Peak Hour Factor	75	75	92	92	77	77	92	92	92	57	92	57
Heavy Vehicles, %	2	2	2	2	2	2	2	2	2	2	2	2
Mvmt Flow	19	233	0	0	319	44	0	0	0	54	0	58

Major/Minor	Major1			Major2			Minor1			Minor2		
Conflicting Flow All	373	0	0	243	0	0	661	654	253	632	632	361
Stage 1	-	-	-	-	-	-	281	281	-	351	351	-
Stage 2	-	-	-	-	-	-	380	373	-	281	281	-
Critical Hdwy	4.12	-	-	4.12	-	-	7.12	6.52	6.22	7.12	6.52	6.22
Critical Hdwy Stg 1	-	-	-	-	-	-	6.12	5.52	-	6.12	5.52	-
Critical Hdwy Stg 2	-	-	-	-	-	-	6.12	5.52	-	6.12	5.52	-
Follow-up Hdwy	2.218	-	-	2.218	-	-	3.518	4.018	3.318	3.518	4.018	3.318
Pot Cap-1 Maneuver	1185	-	-	1323	-	-	376	386	786	393	398	684
Stage 1	-	-	-	-	-	-	726	678	-	666	632	-
Stage 2	-	-	-	-	-	-	642	618	-	726	678	-
Platoon blocked, %		-	-		-	-						
Mov Cap-1 Maneuver	1174	-	-	1310	-	-	332	371	771	380	382	671
Mov Cap-2 Maneuver	-	-	-	-	-	-	332	371	-	380	382	-
Stage 1	-	-	-	-	-	-	706	658	-	647	626	-
Stage 2	-	-	-	-	-	-	581	612	-	705	658	-

Approach	EB	WB	NB	SB
HCM Control Delay, s	0.6	0	0	14.5
HCM LOS			A	B

Minor Lane/Major Mvmt	NBLn1	EBL	EBT	EBR	WBL	WBT	WBR	SBLn1
Capacity (veh/h)	-	1174	-	-	1310	-	-	489
HCM Lane V/C Ratio	-	0.016	-	-	-	-	-	0.23
HCM Control Delay (s)	0	8.1	0	-	0	-	-	14.5
HCM Lane LOS	A	A	A	-	A	-	-	B
HCM 95th %tile Q(veh)	-	0	-	-	0	-	-	0.9

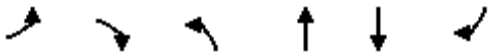

Movement	EBL	EBR	NBL	NBT	SBT	SBR
Lane Configurations						
Traffic Volume (veh/h)	55	154	230	472	187	48
Future Volume (veh/h)	55	154	230	472	187	48
Initial Q (Qb), veh	0	0	0	0	0	0
Ped-Bike Adj(A_pbT)	1.00	1.00	1.00			0.95
Parking Bus, Adj	1.00	1.00	1.00	1.00	1.00	1.00
Work Zone On Approach	No			No	No	
Adj Sat Flow, veh/h/ln	1870	1870	1870	1870	1870	1870
Adj Flow Rate, veh/h	67	188	280	576	231	59
Peak Hour Factor	0.82	0.82	0.82	0.82	0.81	0.81
Percent Heavy Veh, %	2	2	2	2	2	2
Cap, veh/h	260	563	373	1067	366	93
Arrive On Green	0.15	0.15	0.21	0.57	0.26	0.26
Sat Flow, veh/h	1781	1585	1781	1870	1419	362
Grp Volume(v), veh/h	67	188	280	576	0	290
Grp Sat Flow(s),veh/h/ln	1781	1585	1781	1870	0	1781
Q Serve(g_s), s	1.3	3.4	5.7	7.4	0.0	5.6
Cycle Q Clear(g_c), s	1.3	3.4	5.7	7.4	0.0	5.6
Prop In Lane	1.00	1.00	1.00			0.20
Lane Grp Cap(c), veh/h	260	563	373	1067	0	459
V/C Ratio(X)	0.26	0.33	0.75	0.54	0.00	0.63
Avail Cap(c_a), veh/h	919	1150	2572	5739	0	2710
HCM Platoon Ratio	1.00	1.00	1.00	1.00	1.00	1.00
Upstream Filter(I)	1.00	1.00	1.00	1.00	0.00	1.00
Uniform Delay (d), s/veh	14.7	9.1	14.4	5.2	0.0	12.8
Incr Delay (d2), s/veh	0.5	0.3	3.0	0.4	0.0	1.4
Initial Q Delay(d3),s/veh	0.0	0.0	0.0	0.0	0.0	0.0
%ile BackOfQ(50%),veh/ln	0.5	3.4	2.0	1.2	0.0	1.8
Unsig. Movement Delay, s/veh						
LnGrp Delay(d),s/veh	15.2	9.5	17.4	5.6	0.0	14.2
LnGrp LOS	B	A	B	A	A	B
Approach Vol, veh/h	255			856	290	
Approach Delay, s/veh	11.0			9.5	14.2	
Approach LOS	B			A	B	

Timer - Assigned Phs		2		4	5	6
Phs Duration (G+Y+Rc), s		28.1		10.7	12.1	16.0
Change Period (Y+Rc), s		6.0		5.0	4.0	6.0
Max Green Setting (Gmax), s		119.0		20.0	56.0	59.0
Max Q Clear Time (g_c+I1), s		9.4		5.4	7.7	7.6
Green Ext Time (p_c), s		4.0		0.7	0.8	1.8

Intersection Summary		
HCM 6th Ctrl Delay		10.7
HCM 6th LOS		B



Movement	WBL	WBR	NBT	NBR	SBL	SBT
Lane Configurations						
Traffic Volume (veh/h)	32	30	494	33	7	203
Future Volume (veh/h)	32	30	494	33	7	203
Initial Q (Qb), veh	0	0	0	0	0	0
Ped-Bike Adj(A_pbT)	1.00	1.00		0.96	1.00	
Parking Bus, Adj	1.00	1.00	1.00	1.00	1.00	1.00
Work Zone On Approach	No		No			No
Adj Sat Flow, veh/h/ln	1870	1870	1870	1870	1870	1870
Adj Flow Rate, veh/h	48	45	610	41	9	248
Peak Hour Factor	0.67	0.67	0.81	0.81	0.82	0.82
Percent Heavy Veh, %	2	2	2	2	2	2
Cap, veh/h	151	153	827	56	21	1130
Arrive On Green	0.08	0.08	0.48	0.48	0.01	0.60
Sat Flow, veh/h	1781	1585	1728	116	1781	1870
Grp Volume(v), veh/h	48	45	0	651	9	248
Grp Sat Flow(s),veh/h/ln	1781	1585	0	1844	1781	1870
Q Serve(g_s), s	0.9	0.9	0.0	10.0	0.2	2.1
Cycle Q Clear(g_c), s	0.9	0.9	0.0	10.0	0.2	2.1
Prop In Lane	1.00	1.00		0.06	1.00	
Lane Grp Cap(c), veh/h	151	153	0	883	21	1130
V/C Ratio(X)	0.32	0.29	0.00	0.74	0.42	0.22
Avail Cap(c_a), veh/h	756	692	0	5741	504	6563
HCM Platoon Ratio	1.00	1.00	1.00	1.00	1.00	1.00
Upstream Filter(I)	1.00	1.00	0.00	1.00	1.00	1.00
Uniform Delay (d), s/veh	15.2	14.8	0.0	7.4	17.3	3.2
Incr Delay (d2), s/veh	1.2	1.1	0.0	1.2	12.7	0.1
Initial Q Delay(d3),s/veh	0.0	0.0	0.0	0.0	0.0	0.0
%ile BackOfQ(50%),veh/ln	0.4	0.3	0.0	2.1	0.1	0.2
Unsig. Movement Delay, s/veh						
LnGrp Delay(d),s/veh	16.4	15.9	0.0	8.6	30.1	3.3
LnGrp LOS	B	B	A	A	C	A
Approach Vol, veh/h	93		651			257
Approach Delay, s/veh	16.2		8.6			4.2
Approach LOS	B		A			A

Timer - Assigned Phs	1	2				6	8
Phs Duration (G+Y+Rc), s	4.4	22.9				27.3	8.0
Change Period (Y+Rc), s	4.0	6.0				6.0	5.0
Max Green Setting (Gmax), s	10.0	110.0				124.0	15.0
Max Q Clear Time (g_c+I1), s	2.2	12.0				4.1	2.9
Green Ext Time (p_c), s	0.0	4.9				1.5	0.2

Intersection Summary	
HCM 6th Ctrl Delay	8.2
HCM 6th LOS	A



Movement	EBL	EBT	EBR	WBL	WBT	WBR	NBL	NBT	NBR	SBL	SBT	SBR
Lane Configurations												
Traffic Volume (veh/h)	1	36	2	21	57	116	4	21	39	15	4	3
Future Volume (veh/h)	1	36	2	21	57	116	4	21	39	15	4	3
Initial Q (Qb), veh	0	0	0	0	0	0	0	0	0	0	0	0
Ped-Bike Adj(A_pbT)	1.00		0.87	1.00		0.92	0.99		0.98	1.00		0.96
Parking Bus, Adj	1.00	1.00	1.00	1.00	1.00	1.00	1.00	1.00	1.00	1.00	1.00	1.00
Work Zone On Approach		No			No			No			No	
Adj Sat Flow, veh/h/ln	1870	1870	1870	1870	1870	1870	1870	1870	1870	1870	1870	1870
Adj Flow Rate, veh/h	2	67	4	26	70	143	5	29	53	22	6	4
Peak Hour Factor	0.54	0.54	0.54	0.81	0.81	0.81	0.73	0.73	0.73	0.69	0.69	0.69
Percent Heavy Veh, %	2	2	2	2	2	2	2	2	2	2	2	2
Cap, veh/h	4	129	8	70	188	204	71	340	569	840	584	389
Arrive On Green	0.08	0.08	0.08	0.14	0.14	0.14	0.57	0.57	0.57	0.57	0.57	0.57
Sat Flow, veh/h	50	1682	100	500	1346	1457	45	600	1004	1310	1030	687
Grp Volume(v), veh/h	73	0	0	96	0	143	87	0	0	22	0	10
Grp Sat Flow(s),veh/h/ln	1832	0	0	1845	0	1457	1649	0	0	1310	0	1717
Q Serve(g_s), s	3.2	0.0	0.0	3.9	0.0	7.8	0.0	0.0	0.0	0.0	0.0	0.2
Cycle Q Clear(g_c), s	3.2	0.0	0.0	3.9	0.0	7.8	2.0	0.0	0.0	0.5	0.0	0.2
Prop In Lane	0.03		0.05	0.27		1.00	0.06		0.61	1.00		0.40
Lane Grp Cap(c), veh/h	140	0	0	258	0	204	980	0	0	840	0	973
V/C Ratio(X)	0.52	0.00	0.00	0.37	0.00	0.70	0.09	0.00	0.00	0.03	0.00	0.01
Avail Cap(c_a), veh/h	795	0	0	1090	0	861	980	0	0	840	0	973
HCM Platoon Ratio	1.00	1.00	1.00	1.00	1.00	1.00	1.00	1.00	1.00	1.00	1.00	1.00
Upstream Filter(I)	1.00	0.00	0.00	1.00	0.00	1.00	1.00	0.00	0.00	1.00	0.00	1.00
Uniform Delay (d), s/veh	36.8	0.0	0.0	32.4	0.0	34.0	8.2	0.0	0.0	7.9	0.0	7.8
Incr Delay (d2), s/veh	1.1	0.0	0.0	0.3	0.0	1.6	0.2	0.0	0.0	0.1	0.0	0.0
Initial Q Delay(d3),s/veh	0.0	0.0	0.0	0.0	0.0	0.0	0.0	0.0	0.0	0.0	0.0	0.0
%ile BackOfQ(50%),veh/ln	1.4	0.0	0.0	1.7	0.0	2.7	0.7	0.0	0.0	0.2	0.0	0.1
Unsig. Movement Delay, s/veh												
LnGrp Delay(d),s/veh	37.9	0.0	0.0	32.7	0.0	35.7	8.4	0.0	0.0	7.9	0.0	7.9
LnGrp LOS	D	A	A	C	A	D	A	A	A	A	A	A
Approach Vol, veh/h		73			239			87			32	
Approach Delay, s/veh		37.9			34.5			8.4			7.9	
Approach LOS		D			C			A			A	

Timer - Assigned Phs	2	4	6	8
Phs Duration (G+Y+Rc), s	53.0	12.4	53.0	17.6
Change Period (Y+Rc), s	6.0	6.0	6.0	6.0
Max Green Setting (Gmax), s	47.0	36.0	47.0	49.0
Max Q Clear Time (g_c+I1), s	4.0	5.2	2.5	9.8
Green Ext Time (p_c), s	0.1	0.2	0.2	0.6

Intersection Summary	
HCM 6th Ctrl Delay	27.8
HCM 6th LOS	C



Movement	EBL	EBT	EBR	WBL	WBT	WBR	NBL	NBT	NBR	SBL	SBT	SBR
Lane Configurations												
Traffic Volume (veh/h)	49	16	29	1	42	26	121	1168	19	20	942	33
Future Volume (veh/h)	49	16	29	1	42	26	121	1168	19	20	942	33
Initial Q (Qb), veh	0	0	0	0	0	0	0	0	0	0	0	0
Ped-Bike Adj(A_pbT)	1.00		0.94	1.00		0.96	1.00		0.96	1.00		0.98
Parking Bus, Adj	1.00	1.00	1.00	1.00	1.00	1.00	1.00	1.00	1.00	1.00	1.00	1.00
Work Zone On Approach		No			No			No			No	
Adj Sat Flow, veh/h/ln	1870	1870	1870	1870	1870	1870	1870	1870	1870	1870	1870	1870
Adj Flow Rate, veh/h	63	21	37	1	54	33	151	1460	24	26	1239	43
Peak Hour Factor	0.78	0.78	0.78	0.78	0.78	0.78	0.80	0.80	0.80	0.76	0.76	0.76
Percent Heavy Veh, %	2	2	2	2	2	2	2	2	2	2	2	2
Cap, veh/h	130	449	863	5	317	257	286	1721	28	86	1587	807
Arrive On Green	0.07	0.24	0.24	0.00	0.17	0.17	0.08	0.48	0.48	0.05	0.45	0.45
Sat Flow, veh/h	1781	1870	2635	1781	1870	1518	3456	3575	59	1781	3554	1548
Grp Volume(v), veh/h	63	21	37	1	54	33	151	725	759	26	1239	43
Grp Sat Flow(s),veh/h/ln	1781	1870	1317	1781	1870	1518	1728	1777	1857	1781	1777	1548
Q Serve(g_s), s	4.1	1.0	1.2	0.1	3.0	2.2	5.0	42.8	43.0	1.7	35.5	1.6
Cycle Q Clear(g_c), s	4.1	1.0	1.2	0.1	3.0	2.2	5.0	42.8	43.0	1.7	35.5	1.6
Prop In Lane	1.00		1.00	1.00		1.00	1.00		0.03	1.00		1.00
Lane Grp Cap(c), veh/h	130	449	863	5	317	257	286	855	894	86	1587	807
V/C Ratio(X)	0.48	0.05	0.04	0.21	0.17	0.13	0.53	0.85	0.85	0.30	0.78	0.05
Avail Cap(c_a), veh/h	149	718	1242	149	718	583	288	855	894	149	1681	848
HCM Platoon Ratio	1.00	1.00	1.00	1.00	1.00	1.00	1.00	1.00	1.00	1.00	1.00	1.00
Upstream Filter(I)	1.00	1.00	1.00	1.00	1.00	1.00	1.00	1.00	1.00	1.00	1.00	1.00
Uniform Delay (d), s/veh	53.4	35.0	27.9	59.6	42.6	42.3	52.7	27.2	27.3	55.1	28.2	14.2
Incr Delay (d2), s/veh	1.0	0.1	0.0	7.5	0.5	0.5	0.9	10.2	9.9	0.7	3.9	0.1
Initial Q Delay(d3),s/veh	0.0	0.0	0.0	0.0	0.0	0.0	0.0	0.0	0.0	0.0	0.0	0.0
%ile BackOfQ(50%),veh/ln	1.8	0.5	0.4	0.0	1.4	0.9	2.1	18.7	19.5	0.7	14.6	0.6
Unsig. Movement Delay, s/veh												
LnGrp Delay(d),s/veh	54.4	35.1	27.9	67.2	43.1	42.7	53.6	37.4	37.2	55.8	32.0	14.3
LnGrp LOS	D	D	C	E	D	D	D	D	D	E	C	B
Approach Vol, veh/h		121			88			1635			1308	
Approach Delay, s/veh		43.0			43.2			38.8			31.9	
Approach LOS		D			D			D			C	

Timer - Assigned Phs	1	2	3	4	5	6	7	8
Phs Duration (G+Y+Rc), s	11.5	66.1	6.0	36.3	15.6	61.9	14.5	27.8
Change Period (Y+Rc), s	* 5.7	* 8.4	* 5.7	7.5	* 5.7	* 8.4	* 5.7	7.5
Max Green Setting (Gmax), s	* 6	* 57	* 10	46.0	* 10	* 57	* 10	46.0
Max Q Clear Time (g_c+I1), s	3.7	45.0	2.1	3.2	7.0	37.5	6.1	5.0
Green Ext Time (p_c), s	0.0	10.9	0.0	0.5	0.1	16.0	0.0	0.8

Intersection Summary	
HCM 6th Ctrl Delay	36.2
HCM 6th LOS	D

Notes

* HCM 6th computational engine requires equal clearance times for the phases crossing the barrier.

Intersection	
Int Delay, s/veh	2.3

Movement	EBL	EBR	NBL	NBT	SBT	SBR
Lane Configurations						
Traffic Vol, veh/h	56	50	19	702	323	18
Future Vol, veh/h	56	50	19	702	323	18
Conflicting Peds, #/hr	10	10	10	0	0	10
Sign Control	Stop	Stop	Free	Free	Free	Free
RT Channelized	-	None	-	None	-	None
Storage Length	0	-	410	-	-	80
Veh in Median Storage, #	0	-	-	0	0	-
Grade, %	0	-	-	0	0	-
Peak Hour Factor	92	92	92	92	92	92
Heavy Vehicles, %	2	2	2	2	2	2
Mvmt Flow	61	54	21	763	351	20

Major/Minor	Minor2		Major1		Major2	
Conflicting Flow All	1176	371	381	0	-	0
Stage 1	361	-	-	-	-	-
Stage 2	815	-	-	-	-	-
Critical Hdwy	6.42	6.22	4.12	-	-	-
Critical Hdwy Stg 1	5.42	-	-	-	-	-
Critical Hdwy Stg 2	5.42	-	-	-	-	-
Follow-up Hdwy	3.518	3.318	2.218	-	-	-
Pot Cap-1 Maneuver	211	675	1177	-	-	-
Stage 1	705	-	-	-	-	-
Stage 2	435	-	-	-	-	-
Platoon blocked, %				-	-	-
Mov Cap-1 Maneuver	203	662	1166	-	-	-
Mov Cap-2 Maneuver	203	-	-	-	-	-
Stage 1	685	-	-	-	-	-
Stage 2	431	-	-	-	-	-

Approach	EB	NB	SB
HCM Control Delay, s	24.1	0.2	0
HCM LOS	C		

Minor Lane/Major Mvmt	NBL	NBT	EBLn1	SBT	SBR
Capacity (veh/h)	1166	-	302	-	-
HCM Lane V/C Ratio	0.018	-	0.382	-	-
HCM Control Delay (s)	8.1	-	24.1	-	-
HCM Lane LOS	A	-	C	-	-
HCM 95th %tile Q(veh)	0.1	-	1.7	-	-

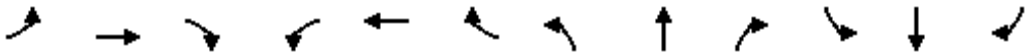

Movement	EBL	EBT	EBR	WBL	WBT	WBR	NBL	NBT	NBR	SBL	SBT	SBR
Lane Configurations												
Traffic Volume (veh/h)	111	97	100	198	72	245	38	300	34	133	156	35
Future Volume (veh/h)	111	97	100	198	72	245	38	300	34	133	156	35
Initial Q (Qb), veh	0	0	0	0	0	0	0	0	0	0	0	0
Ped-Bike Adj(A_pbT)	1.00		0.97	1.00		0.95	1.00		0.97	1.00		0.97
Parking Bus, Adj	1.00	1.00	1.00	1.00	1.00	1.00	1.00	1.00	1.00	1.00	1.00	1.00
Work Zone On Approach		No			No			No			No	
Adj Sat Flow, veh/h/ln	1870	1870	1870	1870	1870	1870	1870	1870	1870	1870	1870	1870
Adj Flow Rate, veh/h	152	133	137	257	94	318	45	353	40	158	186	42
Peak Hour Factor	0.73	0.73	0.73	0.77	0.77	0.77	0.85	0.85	0.85	0.84	0.84	0.84
Percent Heavy Veh, %	2	2	2	2	2	2	2	2	2	2	2	2
Cap, veh/h	228	434	355	298	507	408	166	440	50	208	839	184
Arrive On Green	0.13	0.23	0.23	0.17	0.27	0.27	0.09	0.27	0.27	0.12	0.29	0.29
Sat Flow, veh/h	1781	1870	1531	1781	1870	1503	1781	1644	186	1781	2878	633
Grp Volume(v), veh/h	152	133	137	257	94	318	45	0	393	158	113	115
Grp Sat Flow(s),veh/h/ln	1781	1870	1531	1781	1870	1503	1781	0	1830	1781	1777	1734
Q Serve(g_s), s	6.8	4.9	6.3	11.7	3.2	16.3	2.0	0.0	16.7	7.2	4.0	4.2
Cycle Q Clear(g_c), s	6.8	4.9	6.3	11.7	3.2	16.3	2.0	0.0	16.7	7.2	4.0	4.2
Prop In Lane	1.00		1.00	1.00		1.00	1.00		0.10	1.00		0.36
Lane Grp Cap(c), veh/h	228	434	355	298	507	408	166	0	490	208	518	505
V/C Ratio(X)	0.67	0.31	0.39	0.86	0.19	0.78	0.27	0.00	0.80	0.76	0.22	0.23
Avail Cap(c_a), veh/h	385	516	423	556	696	559	257	0	790	363	874	853
HCM Platoon Ratio	1.00	1.00	1.00	1.00	1.00	1.00	1.00	1.00	1.00	1.00	1.00	1.00
Upstream Filter(I)	1.00	1.00	1.00	1.00	1.00	1.00	1.00	0.00	1.00	1.00	1.00	1.00
Uniform Delay (d), s/veh	34.6	26.5	27.0	33.7	23.3	28.1	35.2	0.0	28.4	35.7	22.3	22.4
Incr Delay (d2), s/veh	1.3	0.6	1.0	2.9	0.2	5.9	0.3	0.0	4.4	2.1	0.3	0.3
Initial Q Delay(d3),s/veh	0.0	0.0	0.0	0.0	0.0	0.0	0.0	0.0	0.0	0.0	0.0	0.0
%ile BackOfQ(50%),veh/ln	3.0	2.2	0.1	5.2	1.4	6.3	0.8	0.0	7.4	3.1	1.6	1.7
Unsig. Movement Delay, s/veh												
LnGrp Delay(d),s/veh	35.9	27.0	28.0	36.6	23.5	34.0	35.5	0.0	32.8	37.8	22.6	22.7
LnGrp LOS	D	C	C	D	C	C	D	A	C	D	C	C
Approach Vol, veh/h		422			669			438			386	
Approach Delay, s/veh		30.5			33.5			33.1			28.9	
Approach LOS		C			C			C			C	

Timer - Assigned Phs	1	2	3	4	5	6	7	8
Phs Duration (G+Y+Rc), s	13.7	28.3	18.0	23.3	11.8	30.3	14.7	26.6
Change Period (Y+Rc), s	4.0	6.0	4.0	4.0	4.0	6.0	4.0	4.0
Max Green Setting (Gmax), s	17.0	36.0	26.0	23.0	12.0	41.0	18.0	31.0
Max Q Clear Time (g_c+I1), s	9.2	18.7	13.7	8.3	4.0	6.2	8.8	18.3
Green Ext Time (p_c), s	0.1	2.9	0.3	1.5	0.0	1.9	0.1	2.1

Intersection Summary	
HCM 6th Ctrl Delay	31.8
HCM 6th LOS	C

Intersection	
Intersection Delay, s/veh	42.3
Intersection LOS	E

Movement	EBL	EBT	EBR	WBL	WBT	WBR	NBL	NBT	NBR	SBL	SBT	SBR
Lane Configurations												
Traffic Vol, veh/h	11	122	101	29	195	139	132	137	14	212	132	63
Future Vol, veh/h	11	122	101	29	195	139	132	137	14	212	132	63
Peak Hour Factor	0.77	0.77	0.77	0.83	0.83	0.83	0.85	0.85	0.85	0.83	0.83	0.83
Heavy Vehicles, %	2	2	2	2	2	2	2	2	2	2	2	2
Mvmt Flow	14	158	131	35	235	167	155	161	16	255	159	76
Number of Lanes	0	1	1	0	1	1	0	1	0	0	1	0

Approach	EB	WB	NB	SB
Opposing Approach	WB	EB	SB	NB
Opposing Lanes	2	2	1	1
Conflicting Approach Left	SB	NB	EB	WB
Conflicting Lanes Left	1	1	2	2
Conflicting Approach Right	NB	SB	WB	EB
Conflicting Lanes Right	1	1	2	2
HCM Control Delay	16.8	21.9	32.2	83.3
HCM LOS	C	C	D	F

Lane	NBLn1	EBLn1	EBLn2	WBLn1	WBLn2	SBLn1
Vol Left, %	47%	8%	0%	13%	0%	52%
Vol Thru, %	48%	92%	0%	87%	0%	32%
Vol Right, %	5%	0%	100%	0%	100%	15%
Sign Control	Stop	Stop	Stop	Stop	Stop	Stop
Traffic Vol by Lane	283	133	101	224	139	407
LT Vol	132	11	0	29	0	212
Through Vol	137	122	0	195	0	132
RT Vol	14	0	101	0	139	63
Lane Flow Rate	333	173	131	270	167	490
Geometry Grp	2	7	7	7	7	2
Degree of Util (X)	0.748	0.427	0.296	0.644	0.362	1.05
Departure Headway (Hd)	8.334	9.156	8.38	8.823	8.025	7.705
Convergence, Y/N	Yes	Yes	Yes	Yes	Yes	Yes
Cap	436	396	432	413	450	476
Service Time	6.334	6.856	6.08	6.523	5.725	5.705
HCM Lane V/C Ratio	0.764	0.437	0.303	0.654	0.371	1.029
HCM Control Delay	32.2	18.5	14.6	26.1	15.2	83.3
HCM Lane LOS	D	C	B	D	C	F
HCM 95th-tile Q	6.1	2.1	1.2	4.4	1.6	15.1

Intersection	
Int Delay, s/veh	1.8

Movement	EBL	EBT	EBR	WBL	WBT	WBR	NBL	NBT	NBR	SBL	SBT	SBR
Lane Configurations		⇕			⇕			⇕			⇕	
Traffic Vol, veh/h	0	227	12	4	227	1	23	2	7	3	2	2
Future Vol, veh/h	0	227	12	4	227	1	23	2	7	3	2	2
Conflicting Peds, #/hr	10	0	10	10	0	10	10	0	10	10	0	10
Sign Control	Free	Free	Free	Free	Free	Free	Stop	Stop	Stop	Stop	Stop	Stop
RT Channelized	-	-	None	-	-	None	-	-	None	-	-	None
Storage Length	-	-	-	-	-	-	-	-	-	-	-	-
Veh in Median Storage, #	-	0	-	-	0	-	-	0	-	-	0	-
Grade, %	-	0	-	-	0	-	-	0	-	-	0	-
Peak Hour Factor	88	88	88	80	80	80	58	58	58	25	25	25
Heavy Vehicles, %	2	2	2	2	2	2	2	2	2	2	2	2
Mvmt Flow	0	258	14	5	284	1	40	3	12	12	8	8

Major/Minor	Major1			Major2			Minor1			Minor2		
Conflicting Flow All	295	0	0	282	0	0	588	580	285	588	587	305
Stage 1	-	-	-	-	-	-	275	275	-	305	305	-
Stage 2	-	-	-	-	-	-	313	305	-	283	282	-
Critical Hdwy	4.12	-	-	4.12	-	-	7.12	6.52	6.22	7.12	6.52	6.22
Critical Hdwy Stg 1	-	-	-	-	-	-	6.12	5.52	-	6.12	5.52	-
Critical Hdwy Stg 2	-	-	-	-	-	-	6.12	5.52	-	6.12	5.52	-
Follow-up Hdwy	2.218	-	-	2.218	-	-	3.518	4.018	3.318	3.518	4.018	3.318
Pot Cap-1 Maneuver	1266	-	-	1280	-	-	421	426	754	421	422	735
Stage 1	-	-	-	-	-	-	731	683	-	705	662	-
Stage 2	-	-	-	-	-	-	698	662	-	724	678	-
Platoon blocked, %		-	-		-	-						
Mov Cap-1 Maneuver	1254	-	-	1268	-	-	401	415	740	402	411	721
Mov Cap-2 Maneuver	-	-	-	-	-	-	401	415	-	402	411	-
Stage 1	-	-	-	-	-	-	724	676	-	698	652	-
Stage 2	-	-	-	-	-	-	672	652	-	702	671	-

Approach	EB	WB	NB	SB
HCM Control Delay, s	0	0.1	14.2	13.3
HCM LOS			B	B

Minor Lane/Major Mvmt	NBLn1	EBL	EBT	EBR	WBL	WBT	WBR	SBLn1
Capacity (veh/h)	447	1254	-	-	1268	-	-	463
HCM Lane V/C Ratio	0.123	-	-	-	0.004	-	-	0.06
HCM Control Delay (s)	14.2	0	-	-	7.8	0	-	13.3
HCM Lane LOS	B	A	-	-	A	A	-	B
HCM 95th %tile Q(veh)	0.4	0	-	-	0	-	-	0.2

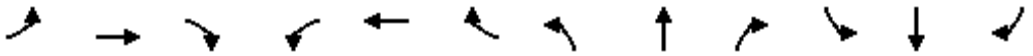

Movement	EBL	EBT	EBR	WBL	WBT	WBR	NBL	NBT	NBR	SBL	SBT	SBR
Lane Configurations												
Traffic Volume (veh/h)	67	116	96	67	141	91	116	621	62	75	757	46
Future Volume (veh/h)	67	116	96	67	141	91	116	621	62	75	757	46
Initial Q (Qb), veh	0	0	0	0	0	0	0	0	0	0	0	0
Ped-Bike Adj(A_pbT)	1.00		0.95	1.00		0.96	1.00		0.96	1.00		0.96
Parking Bus, Adj	1.00	1.00	1.00	1.00	1.00	1.00	1.00	1.00	1.00	1.00	1.00	1.00
Work Zone On Approach		No			No			No			No	
Adj Sat Flow, veh/h/ln	1870	1870	1870	1870	1870	1870	1870	1870	1870	1870	1870	1870
Adj Flow Rate, veh/h	73	126	104	85	178	115	121	647	65	82	823	50
Peak Hour Factor	0.92	0.92	0.92	0.79	0.79	0.79	0.96	0.96	0.96	0.92	0.92	0.92
Percent Heavy Veh, %	2	2	2	2	2	2	2	2	2	2	2	2
Cap, veh/h	93	278	224	107	293	237	147	1769	177	104	1767	107
Arrive On Green	0.05	0.15	0.15	0.06	0.16	0.16	0.08	0.54	0.54	0.06	0.52	0.52
Sat Flow, veh/h	1781	1870	1512	1781	1870	1514	1781	3248	326	1781	3395	206
Grp Volume(v), veh/h	73	126	104	85	178	115	121	353	359	82	431	442
Grp Sat Flow(s),veh/h/ln	1781	1870	1512	1781	1870	1514	1781	1777	1797	1781	1777	1824
Q Serve(g_s), s	4.9	7.4	7.5	5.7	10.6	8.3	8.0	13.6	13.6	5.5	18.4	18.4
Cycle Q Clear(g_c), s	4.9	7.4	7.5	5.7	10.6	8.3	8.0	13.6	13.6	5.5	18.4	18.4
Prop In Lane	1.00		1.00	1.00		1.00	1.00		0.18	1.00		0.11
Lane Grp Cap(c), veh/h	93	278	224	107	293	237	147	968	979	104	925	949
V/C Ratio(X)	0.78	0.45	0.46	0.79	0.61	0.49	0.82	0.37	0.37	0.79	0.47	0.47
Avail Cap(c_a), veh/h	154	500	404	169	516	418	214	968	979	181	925	949
HCM Platoon Ratio	1.00	1.00	1.00	1.00	1.00	1.00	1.00	1.00	1.00	1.00	1.00	1.00
Upstream Filter(I)	1.00	1.00	1.00	0.83	0.83	0.83	0.91	0.91	0.91	1.00	1.00	1.00
Uniform Delay (d), s/veh	56.2	46.6	46.7	55.6	47.2	46.2	54.2	15.5	15.5	55.8	18.2	18.2
Incr Delay (d2), s/veh	5.3	0.4	0.6	4.3	0.6	0.5	9.4	1.0	1.0	5.0	1.7	1.6
Initial Q Delay(d3),s/veh	0.0	0.0	0.0	0.0	0.0	0.0	0.0	0.0	0.0	0.0	0.0	0.0
%ile BackOfQ(50%),veh/ln	2.3	3.4	2.9	2.6	5.0	3.1	4.0	5.7	5.8	2.6	7.9	8.1
Unsig. Movement Delay, s/veh												
LnGrp Delay(d),s/veh	61.5	47.1	47.3	59.9	47.8	46.7	63.6	16.5	16.5	60.7	19.9	19.9
LnGrp LOS	E	D	D	E	D	D	E	B	B	E	B	B
Approach Vol, veh/h		303			378			833			955	
Approach Delay, s/veh		50.6			50.2			23.3			23.4	
Approach LOS		D			D			C			C	

Timer - Assigned Phs	1	2	3	4	5	6	7	8
Phs Duration (G+Y+Rc), s	12.6	71.1	12.8	23.5	15.5	68.2	11.9	24.5
Change Period (Y+Rc), s	5.6	5.7	5.6	5.7	5.6	5.7	5.6	5.7
Max Green Setting (Gmax), s	12.2	41.7	11.4	32.1	14.4	39.5	10.4	33.1
Max Q Clear Time (g_c+I1), s	7.5	15.6	7.7	9.5	10.0	20.4	6.9	12.6
Green Ext Time (p_c), s	0.0	3.0	0.0	0.6	0.1	3.6	0.0	0.8

Intersection Summary	
HCM 6th Ctrl Delay	30.8
HCM 6th LOS	C



Movement	EBL	EBT	EBR	WBL	WBT	WBR	NBL	NBT	NBR	SBL	SBT	SBR
Lane Configurations												
Traffic Volume (veh/h)	36	169	76	22	153	23	82	383	25	53	555	49
Future Volume (veh/h)	36	169	76	22	153	23	82	383	25	53	555	49
Initial Q (Qb), veh	0	0	0	0	0	0	0	0	0	0	0	0
Ped-Bike Adj(A_pbT)	1.00		0.97	0.99		0.97	1.00		0.96	1.00		0.95
Parking Bus, Adj	1.00	1.00	1.00	1.00	1.00	1.00	1.00	1.00	1.00	1.00	1.00	1.00
Work Zone On Approach		No			No			No			No	
Adj Sat Flow, veh/h/ln	1870	1870	1870	1870	1870	1870	1870	1870	1870	1870	1870	1870
Adj Flow Rate, veh/h	44	206	93	30	207	31	95	445	29	70	730	64
Peak Hour Factor	0.82	0.82	0.82	0.74	0.74	0.74	0.86	0.86	0.86	0.76	0.76	0.76
Percent Heavy Veh, %	2	2	2	2	2	2	2	2	2	2	2	2
Cap, veh/h	156	457	206	94	324	46	124	1162	75	104	1095	96
Arrive On Green	0.09	0.38	0.38	0.23	0.23	0.23	0.07	0.34	0.34	0.06	0.33	0.33
Sat Flow, veh/h	1781	1209	546	108	1435	202	1781	3376	219	1781	3291	288
Grp Volume(v), veh/h	44	0	299	268	0	0	95	233	241	70	394	400
Grp Sat Flow(s),veh/h/ln	1781	0	1755	1745	0	0	1781	1777	1819	1781	1777	1802
Q Serve(g_s), s	1.3	0.0	7.4	2.3	0.0	0.0	3.0	5.7	5.8	2.2	11.0	11.0
Cycle Q Clear(g_c), s	1.3	0.0	7.4	7.9	0.0	0.0	3.0	5.7	5.8	2.2	11.0	11.0
Prop In Lane	1.00		0.31	0.11		0.12	1.00		0.12	1.00		0.16
Lane Grp Cap(c), veh/h	156	0	663	464	0	0	124	611	626	104	591	599
V/C Ratio(X)	0.28	0.00	0.45	0.58	0.00	0.00	0.76	0.38	0.38	0.67	0.67	0.67
Avail Cap(c_a), veh/h	348	0	1474	1060	0	0	441	1461	1496	348	1369	1388
HCM Platoon Ratio	1.00	1.00	1.00	1.00	1.00	1.00	1.00	1.00	1.00	1.00	1.00	1.00
Upstream Filter(I)	1.00	0.00	1.00	1.00	0.00	0.00	1.00	1.00	1.00	1.00	1.00	1.00
Uniform Delay (d), s/veh	24.6	0.0	13.5	20.3	0.0	0.0	26.4	14.3	14.3	26.7	16.5	16.5
Incr Delay (d2), s/veh	1.0	0.0	0.5	1.1	0.0	0.0	9.3	0.4	0.4	7.3	1.3	1.3
Initial Q Delay(d3),s/veh	0.0	0.0	0.0	0.0	0.0	0.0	0.0	0.0	0.0	0.0	0.0	0.0
%ile BackOfQ(50%),veh/ln	0.6	0.0	2.6	3.1	0.0	0.0	1.5	2.1	2.2	1.1	4.2	4.2
Unsig. Movement Delay, s/veh												
LnGrp Delay(d),s/veh	25.6	0.0	14.0	21.4	0.0	0.0	35.7	14.7	14.7	34.0	17.8	17.8
LnGrp LOS	C	A	B	C	A	A	D	B	B	C	B	B
Approach Vol, veh/h		343			268			569			864	
Approach Delay, s/veh		15.5			21.4			18.2			19.1	
Approach LOS		B			C			B			B	

Timer - Assigned Phs	1	2		4	5	6	7	8
Phs Duration (G+Y+Rc), s	7.1	24.4		26.3	7.7	23.7	8.8	17.6
Change Period (Y+Rc), s	3.7	4.5		4.5	3.7	4.5	3.7	4.5
Max Green Setting (Gmax), s	11.3	47.5		48.5	14.3	44.5	11.3	33.5
Max Q Clear Time (g_c+I1), s	4.2	7.8		9.4	5.0	13.0	3.3	9.9
Green Ext Time (p_c), s	0.1	3.1		1.9	0.1	5.7	0.0	1.6

Intersection Summary		
HCM 6th Ctrl Delay		18.6
HCM 6th LOS		B



Movement	EBL	EBT	EBR	WBL	WBT	WBR	NBL	NBT	NBR	SBL	SBT	SBR
Lane Configurations												
Traffic Volume (veh/h)	35	127	65	122	120	167	29	590	80	94	718	28
Future Volume (veh/h)	35	127	65	122	120	167	29	590	80	94	718	28
Initial Q (Qb), veh	0	0	0	0	0	0	0	0	0	0	0	0
Ped-Bike Adj(A_pbT)	1.00		0.96	1.00		0.96	1.00		0.95	1.00		0.96
Parking Bus, Adj	1.00	1.00	1.00	1.00	1.00	1.00	1.00	1.00	1.00	1.00	1.00	1.00
Work Zone On Approach		No			No			No			No	
Adj Sat Flow, veh/h/ln	1870	1870	1870	1870	1870	1870	1870	1870	1870	1870	1870	1870
Adj Flow Rate, veh/h	38	137	70	127	125	174	37	747	101	107	816	32
Peak Hour Factor	0.93	0.93	0.93	0.96	0.96	0.96	0.79	0.79	0.79	0.88	0.88	0.88
Percent Heavy Veh, %	2	2	2	2	2	2	2	2	2	2	2	2
Cap, veh/h	51	185	94	177	174	293	67	1013	137	133	1258	49
Arrive On Green	0.19	0.19	0.19	0.19	0.19	0.19	0.04	0.32	0.32	0.07	0.36	0.36
Sat Flow, veh/h	270	975	498	919	905	1524	1781	3125	422	1781	3479	136
Grp Volume(v), veh/h	245	0	0	252	0	174	37	425	423	107	417	431
Grp Sat Flow(s),veh/h/ln	1743	0	0	1824	0	1524	1781	1777	1770	1781	1777	1838
Q Serve(g_s), s	14.1	0.0	0.0	13.8	0.0	11.1	2.2	22.6	22.6	6.3	20.8	20.8
Cycle Q Clear(g_c), s	14.1	0.0	0.0	13.8	0.0	11.1	2.2	22.6	22.6	6.3	20.8	20.8
Prop In Lane	0.16		0.29	0.50		1.00	1.00		0.24	1.00		0.07
Lane Grp Cap(c), veh/h	330	0	0	351	0	293	67	576	574	133	643	665
V/C Ratio(X)	0.74	0.00	0.00	0.72	0.00	0.59	0.55	0.74	0.74	0.80	0.65	0.65
Avail Cap(c_a), veh/h	606	0	0	635	0	530	102	692	689	189	778	805
HCM Platoon Ratio	1.00	1.00	1.00	1.00	1.00	1.00	1.00	1.00	1.00	1.00	1.00	1.00
Upstream Filter(I)	1.00	0.00	0.00	1.00	0.00	1.00	1.00	1.00	1.00	1.00	1.00	1.00
Uniform Delay (d), s/veh	40.6	0.0	0.0	40.3	0.0	39.2	50.3	31.9	31.9	48.4	28.3	28.3
Incr Delay (d2), s/veh	3.3	0.0	0.0	2.8	0.0	1.9	2.6	6.9	7.0	9.9	4.0	3.9
Initial Q Delay(d3),s/veh	0.0	0.0	0.0	0.0	0.0	0.0	0.0	0.0	0.0	0.0	0.0	0.0
%ile BackOfQ(50%),veh/ln	6.2	0.0	0.0	6.3	0.0	4.2	1.0	10.4	10.4	3.1	9.2	9.5
Unsig. Movement Delay, s/veh												
LnGrp Delay(d),s/veh	43.9	0.0	0.0	43.0	0.0	41.1	53.0	38.8	38.9	58.3	32.4	32.2
LnGrp LOS	D	A	A	D	A	D	D	D	D	E	C	C
Approach Vol, veh/h		245			426			885			955	
Approach Delay, s/veh		43.9			42.2			39.4			35.2	
Approach LOS		D			D			D			D	

Timer - Assigned Phs	1	2		4	5	6		8
Phs Duration (G+Y+Rc), s	9.7	43.9		26.6	13.7	39.9		26.3
Change Period (Y+Rc), s	* 5.7	5.4		6.1	* 5.7	5.4		6.1
Max Green Setting (Gmax), s	* 6.1	46.6		37.0	* 11	41.4		37.0
Max Q Clear Time (g_c+I1), s	11.2	22.8		15.8	8.3	24.6		16.1
Green Ext Time (p_c), s	0.0	12.2		2.0	0.0	9.7		1.3

Intersection Summary		
HCM 6th Ctrl Delay		38.7
HCM 6th LOS		D

Notes

* HCM 6th computational engine requires equal clearance times for the phases crossing the barrier.



Movement	EBL	EBT	EBR	WBL	WBT	WBR	NBL	NBT	NBR	SBL	SBT	SBR
Lane Configurations												
Traffic Volume (veh/h)	51	100	164	56	139	62	115	468	30	42	454	50
Future Volume (veh/h)	51	100	164	56	139	62	115	468	30	42	454	50
Initial Q (Qb), veh	0	0	0	0	0	0	0	0	0	0	0	0
Ped-Bike Adj(A_pbT)	1.00		0.92	1.00		0.95	1.00		0.95	1.00		0.95
Parking Bus, Adj	1.00	1.00	1.00	1.00	1.00	1.00	1.00	1.00	1.00	1.00	1.00	1.00
Work Zone On Approach		No			No			No			No	
Adj Sat Flow, veh/h/ln	1870	1870	1870	1870	1870	1870	1870	1870	1870	1870	1870	1870
Adj Flow Rate, veh/h	56	110	180	89	221	98	128	520	33	46	493	54
Peak Hour Factor	0.91	0.91	0.91	0.63	0.63	0.63	0.90	0.90	0.90	0.92	0.92	0.92
Percent Heavy Veh, %	2	2	2	2	2	2	2	2	2	2	2	2
Cap, veh/h	86	169	202	97	242	107	157	592	38	64	541	436
Arrive On Green	0.14	0.14	0.14	0.26	0.26	0.26	0.09	0.34	0.34	0.04	0.29	0.29
Sat Flow, veh/h	620	1219	1457	381	947	420	1781	1734	110	1781	1870	1507
Grp Volume(v), veh/h	166	0	180	408	0	0	128	0	553	46	493	54
Grp Sat Flow(s),veh/h/ln	1839	0	1457	1748	0	0	1781	0	1844	1781	1870	1507
Q Serve(g_s), s	8.7	0.0	12.3	23.0	0.0	0.0	7.2	0.0	28.6	2.6	25.8	2.7
Cycle Q Clear(g_c), s	8.7	0.0	12.3	23.0	0.0	0.0	7.2	0.0	28.6	2.6	25.8	2.7
Prop In Lane	0.34		1.00	0.22		0.24	1.00		0.06	1.00		1.00
Lane Grp Cap(c), veh/h	256	0	202	446	0	0	157	0	629	64	541	436
V/C Ratio(X)	0.65	0.00	0.89	0.91	0.00	0.00	0.82	0.00	0.88	0.72	0.91	0.12
Avail Cap(c_a), veh/h	256	0	202	536	0	0	200	0	832	102	741	597
HCM Platoon Ratio	1.00	1.00	1.00	1.00	1.00	1.00	1.00	1.00	1.00	1.00	1.00	1.00
Upstream Filter(I)	1.00	0.00	1.00	1.00	0.00	0.00	1.00	0.00	1.00	1.00	1.00	1.00
Uniform Delay (d), s/veh	41.4	0.0	42.9	36.7	0.0	0.0	45.5	0.0	31.4	48.4	34.8	26.6
Incr Delay (d2), s/veh	4.5	0.0	33.9	16.8	0.0	0.0	14.7	0.0	7.0	5.6	10.5	0.0
Initial Q Delay(d3),s/veh	0.0	0.0	0.0	0.0	0.0	0.0	0.0	0.0	0.0	0.0	0.0	0.0
%ile BackOfQ(50%),veh/ln	4.2	0.0	6.2	11.6	0.0	0.0	3.7	0.0	13.1	1.2	12.6	0.9
Unsig. Movement Delay, s/veh												
LnGrp Delay(d),s/veh	45.9	0.0	76.8	53.5	0.0	0.0	60.1	0.0	38.5	54.0	45.3	26.6
LnGrp LOS	D	A	E	D	A	A	E	A	D	D	D	C
Approach Vol, veh/h		346			408			681			593	
Approach Delay, s/veh		62.0			53.5			42.5			44.3	
Approach LOS		E			D			D			D	

Timer - Assigned Phs	1	2		4	5	6		8				
Phs Duration (G+Y+Rc), s	9.2	40.4		20.0	14.5	35.1		31.8				
Change Period (Y+Rc), s	5.6	5.8		5.9	5.6	5.8		5.9				
Max Green Setting (Gmax), s	5.8	45.8		14.1	11.4	40.2		31.1				
Max Q Clear Time (g_c+I1), s	4.6	30.6		14.3	9.2	27.8		25.0				
Green Ext Time (p_c), s	0.0	1.8		0.0	0.0	1.5		0.9				

Intersection Summary		
HCM 6th Ctrl Delay		48.6
HCM 6th LOS		D

Intersection	
Intersection Delay, s/veh	38.7
Intersection LOS	E

Movement	EBL	EBT	EBR	WBL	WBT	WBR	NBL	NBT	NBR	SBL	SBT	SBR
Lane Configurations												
Traffic Vol, veh/h	39	113	75	41	103	45	55	392	37	93	497	56
Future Vol, veh/h	39	113	75	41	103	45	55	392	37	93	497	56
Peak Hour Factor	0.81	0.81	0.81	0.89	0.89	0.89	0.86	0.86	0.86	0.73	0.73	0.73
Heavy Vehicles, %	2	2	2	2	2	2	2	2	2	2	2	2
Mvmt Flow	48	140	93	46	116	51	64	456	43	127	681	77
Number of Lanes	0	1	0	0	1	0	1	2	0	1	2	0

Approach	EB	WB	NB	SB
Opposing Approach	WB	EB	SB	NB
Opposing Lanes	1	1	3	3
Conflicting Approach Left	SB	NB	EB	WB
Conflicting Lanes Left	3	3	1	1
Conflicting Approach Right	NB	SB	WB	EB
Conflicting Lanes Right	3	3	1	1
HCM Control Delay	30.2	23.1	24.5	54.1
HCM LOS	D	C	C	F

Lane	NBLn1	NBLn2	NBLn3	EBLn1	WBLn1	SBLn1	SBLn2	SBLn3
Vol Left, %	100%	0%	0%	17%	22%	100%	0%	0%
Vol Thru, %	0%	100%	78%	50%	54%	0%	100%	75%
Vol Right, %	0%	0%	22%	33%	24%	0%	0%	25%
Sign Control	Stop	Stop	Stop	Stop	Stop	Stop	Stop	Stop
Traffic Vol by Lane	55	261	168	227	189	93	331	222
LT Vol	55	0	0	39	41	93	0	0
Through Vol	0	261	131	113	103	0	331	166
RT Vol	0	0	37	75	45	0	0	56
Lane Flow Rate	64	304	195	280	212	127	454	304
Geometry Grp	7	7	7	7	7	7	7	7
Degree of Util (X)	0.16	0.722	0.455	0.697	0.549	0.311	1.042	0.682
Departure Headway (Hd)	9.221	8.696	8.534	9.096	9.453	8.79	8.267	8.082
Convergence, Y/N	Yes	Yes	Yes	Yes	Yes	Yes	Yes	Yes
Cap	391	419	425	401	384	411	440	449
Service Time	6.921	6.396	6.234	6.796	7.153	6.49	5.966	5.781
HCM Lane V/C Ratio	0.164	0.726	0.459	0.698	0.552	0.309	1.032	0.677
HCM Control Delay	13.7	30.9	18.2	30.2	23.1	15.4	83.4	26.4
HCM Lane LOS	B	D	C	D	C	C	F	D
HCM 95th-tile Q	0.6	5.6	2.3	5.1	3.2	1.3	14.2	5



Movement	EBL	EBT	EBR	WBL	WBT	WBR	NBL	NBT	NBR	SBL	SBT	SBR
Lane Configurations												
Traffic Volume (veh/h)	72	47	177	55	26	16	67	596	33	17	715	51
Future Volume (veh/h)	72	47	177	55	26	16	67	596	33	17	715	51
Initial Q (Qb), veh	0	0	0	0	0	0	0	0	0	0	0	0
Ped-Bike Adj(A_pbT)	1.00		0.96	1.00		0.95	1.00		0.96	1.00		0.96
Parking Bus, Adj	1.00	1.00	1.00	1.00	1.00	1.00	1.00	1.00	1.00	1.00	1.00	1.00
Work Zone On Approach		No			No			No			No	
Adj Sat Flow, veh/h/ln	1870	1870	1870	1870	1870	1870	1870	1870	1870	1870	1870	1870
Adj Flow Rate, veh/h	92	60	227	72	34	21	69	614	34	18	777	55
Peak Hour Factor	0.78	0.78	0.78	0.76	0.76	0.76	0.97	0.97	0.97	0.92	0.92	0.92
Percent Heavy Veh, %	2	2	2	2	2	2	2	2	2	2	2	2
Cap, veh/h	199	130	276	138	65	40	122	1380	76	59	1236	87
Arrive On Green	0.18	0.18	0.18	0.14	0.14	0.14	0.07	0.40	0.40	0.03	0.37	0.37
Sat Flow, veh/h	1099	717	1521	993	469	290	1781	3415	189	1781	3354	237
Grp Volume(v), veh/h	152	0	227	127	0	0	69	319	329	18	411	421
Grp Sat Flow(s),veh/h/ln	1815	0	1521	1751	0	0	1781	1777	1827	1781	1777	1815
Q Serve(g_s), s	6.0	0.0	11.5	5.4	0.0	0.0	3.0	10.5	10.5	0.8	15.3	15.3
Cycle Q Clear(g_c), s	6.0	0.0	11.5	5.4	0.0	0.0	3.0	10.5	10.5	0.8	15.3	15.3
Prop In Lane	0.61		1.00	0.57		0.17	1.00		0.10	1.00		0.13
Lane Grp Cap(c), veh/h	329	0	276	244	0	0	122	718	738	59	655	669
V/C Ratio(X)	0.46	0.00	0.82	0.52	0.00	0.00	0.57	0.44	0.45	0.31	0.63	0.63
Avail Cap(c_a), veh/h	481	0	403	573	0	0	233	985	1013	184	937	957
HCM Platoon Ratio	1.00	1.00	1.00	1.00	1.00	1.00	1.00	1.00	1.00	1.00	1.00	1.00
Upstream Filter(I)	1.00	0.00	1.00	1.00	0.00	0.00	1.00	1.00	1.00	1.00	1.00	1.00
Uniform Delay (d), s/veh	29.4	0.0	31.7	32.1	0.0	0.0	36.3	17.4	17.4	38.0	20.9	20.9
Incr Delay (d2), s/veh	1.0	0.0	8.6	1.7	0.0	0.0	1.5	1.6	1.5	1.1	3.6	3.5
Initial Q Delay(d3),s/veh	0.0	0.0	0.0	0.0	0.0	0.0	0.0	0.0	0.0	0.0	0.0	0.0
%ile BackOfQ(50%),veh/ln	2.6	0.0	4.8	2.4	0.0	0.0	1.3	4.2	4.3	0.3	6.4	6.5
Unsig. Movement Delay, s/veh												
LnGrp Delay(d),s/veh	30.4	0.0	40.3	33.8	0.0	0.0	37.8	19.0	19.0	39.1	24.4	24.4
LnGrp LOS	C	A	D	C	A	A	D	B	B	D	C	C
Approach Vol, veh/h		379			127			717			850	
Approach Delay, s/veh		36.3			33.8			20.8			24.7	
Approach LOS		D			C			C			C	

Timer - Assigned Phs	1	2		4	5	6		8
Phs Duration (G+Y+Rc), s	10.2	35.0		15.9	7.3	37.9		19.3
Change Period (Y+Rc), s	* 4.7	5.4		* 4.7	* 4.7	5.4		4.7
Max Green Setting (Gmax), s	* 11	42.4		* 26	* 8.3	44.6		21.3
Max Q Clear Time (g_c+I1), s	5.0	17.3		7.4	2.8	12.5		13.5
Green Ext Time (p_c), s	0.0	12.3		0.6	0.0	10.5		1.0

Intersection Summary	
HCM 6th Ctrl Delay	26.0
HCM 6th LOS	C

Notes

* HCM 6th computational engine requires equal clearance times for the phases crossing the barrier.



Movement	EBL	EBT	EBR	WBL	WBT	WBR	NBL	NBT	NBR	SBL	SBT	SBR
Lane Configurations												
Traffic Volume (veh/h)	94	55	225	72	60	50	182	492	38	55	684	85
Future Volume (veh/h)	94	55	225	72	60	50	182	492	38	55	684	85
Initial Q (Qb), veh	0	0	0	0	0	0	0	0	0	0	0	0
Ped-Bike Adj(A_pbT)	1.00		0.97	0.99		0.96	1.00		0.96	1.00		0.97
Parking Bus, Adj	1.00	1.00	1.00	1.00	1.00	1.00	1.00	1.00	1.00	1.00	1.00	1.00
Work Zone On Approach		No			No			No			No	
Adj Sat Flow, veh/h/ln	1870	1870	1870	1870	1870	1870	1870	1870	1870	1870	1870	1870
Adj Flow Rate, veh/h	104	61	250	84	70	58	196	529	41	59	728	90
Peak Hour Factor	0.90	0.90	0.90	0.86	0.86	0.86	0.93	0.93	0.93	0.94	0.94	0.94
Percent Heavy Veh, %	2	2	2	2	2	2	2	2	2	2	2	2
Cap, veh/h	132	661	546	157	124	84	237	1323	102	79	979	121
Arrive On Green	0.07	0.35	0.35	0.21	0.21	0.21	0.13	0.40	0.40	0.04	0.31	0.31
Sat Flow, veh/h	1781	1870	1543	458	581	392	1781	3330	257	1781	3171	392
Grp Volume(v), veh/h	104	61	250	212	0	0	196	282	288	59	408	410
Grp Sat Flow(s),veh/h/ln	1781	1870	1543	1431	0	0	1781	1777	1811	1781	1777	1786
Q Serve(g_s), s	4.9	1.9	10.7	8.5	0.0	0.0	9.2	9.7	9.8	2.8	17.6	17.6
Cycle Q Clear(g_c), s	4.9	1.9	10.7	11.3	0.0	0.0	9.2	9.7	9.8	2.8	17.6	17.6
Prop In Lane	1.00		1.00	0.40		0.27	1.00		0.14	1.00		0.22
Lane Grp Cap(c), veh/h	132	661	546	365	0	0	237	706	720	79	548	551
V/C Ratio(X)	0.79	0.09	0.46	0.58	0.00	0.00	0.83	0.40	0.40	0.75	0.74	0.74
Avail Cap(c_a), veh/h	219	1076	887	601	0	0	384	914	931	198	728	732
HCM Platoon Ratio	1.00	1.00	1.00	1.00	1.00	1.00	1.00	1.00	1.00	1.00	1.00	1.00
Upstream Filter(I)	1.00	1.00	1.00	1.00	0.00	0.00	1.00	1.00	1.00	1.00	1.00	1.00
Uniform Delay (d), s/veh	38.8	18.4	21.3	30.6	0.0	0.0	36.1	18.4	18.4	40.3	26.5	26.5
Incr Delay (d2), s/veh	3.8	0.0	0.2	0.5	0.0	0.0	7.7	0.5	0.5	5.3	3.6	3.6
Initial Q Delay(d3),s/veh	0.0	0.0	0.0	0.0	0.0	0.0	0.0	0.0	0.0	0.0	0.0	0.0
%ile BackOfQ(50%),veh/ln	2.2	0.8	3.7	4.0	0.0	0.0	4.4	3.9	4.0	1.3	7.7	7.8
Unsig. Movement Delay, s/veh												
LnGrp Delay(d),s/veh	42.7	18.5	21.5	31.1	0.0	0.0	43.8	18.9	19.0	45.6	30.1	30.1
LnGrp LOS	D	B	C	C	A	A	D	B	B	D	C	C
Approach Vol, veh/h		415			212			766			877	
Approach Delay, s/veh		26.4			31.1			25.3			31.1	
Approach LOS		C			C			C			C	

Timer - Assigned Phs	1	2		4	5	6	7	8
Phs Duration (G+Y+Rc), s	9.4	39.6		36.4	16.9	32.0	11.9	24.4
Change Period (Y+Rc), s	5.6	5.7		6.2	5.6	5.7	5.6	6.2
Max Green Setting (Gmax), s	9.5	43.9		49.1	18.4	35.0	10.5	33.0
Max Q Clear Time (g_c+I1), s	4.8	11.8		12.7	11.2	19.6	6.9	13.3
Green Ext Time (p_c), s	0.0	5.5		0.7	0.3	6.3	0.0	0.9

Intersection Summary		
HCM 6th Ctrl Delay		28.3
HCM 6th LOS		C



Movement	EBL	EBT	EBR	WBL	WBT	WBR	NBL	NBT	NBR	SBL	SBT	SBR
Lane Configurations												
Traffic Volume (veh/h)	0	0	0	194	2	257	181	707	0	0	964	93
Future Volume (veh/h)	0	0	0	194	2	257	181	707	0	0	964	93
Initial Q (Qb), veh				0	0	0	0	0	0	0	0	0
Ped-Bike Adj(A_pbT)				1.00		0.97	1.00		1.00	1.00		0.96
Parking Bus, Adj				1.00	1.00	1.00	1.00	1.00	1.00	1.00	1.00	1.00
Work Zone On Approach					No			No			No	
Adj Sat Flow, veh/h/ln				1870	1870	1870	1870	1870	0	0	1870	1870
Adj Flow Rate, veh/h				209	2	276	245	955	0	0	1095	106
Peak Hour Factor				0.93	0.93	0.93	0.74	0.74	0.74	0.88	0.88	0.88
Percent Heavy Veh, %				2	2	2	2	2	0	0	2	2
Cap, veh/h				415	4	360	280	2322	0	0	1454	141
Arrive On Green				0.24	0.24	0.24	0.16	0.65	0.00	0.00	0.45	0.45
Sat Flow, veh/h				1765	17	1532	1781	3647	0	0	3354	315
Grp Volume(v), veh/h				211	0	276	245	955	0	0	596	605
Grp Sat Flow(s),veh/h/ln				1782	0	1532	1781	1777	0	0	1777	1798
Q Serve(g_s), s				9.7	0.0	15.8	12.6	12.0	0.0	0.0	26.3	26.4
Cycle Q Clear(g_c), s				9.7	0.0	15.8	12.6	12.0	0.0	0.0	26.3	26.4
Prop In Lane				0.99		1.00	1.00		0.00	0.00		0.18
Lane Grp Cap(c), veh/h				419	0	360	280	2322	0	0	792	802
V/C Ratio(X)				0.50	0.00	0.77	0.87	0.41	0.00	0.00	0.75	0.75
Avail Cap(c_a), veh/h				703	0	604	407	2735	0	0	873	883
HCM Platoon Ratio				1.00	1.00	1.00	1.00	1.00	1.00	1.00	1.00	1.00
Upstream Filter(I)				1.00	0.00	1.00	1.00	1.00	0.00	0.00	1.00	1.00
Uniform Delay (d), s/veh				31.2	0.0	33.6	38.7	7.7	0.0	0.0	21.7	21.8
Incr Delay (d2), s/veh				0.9	0.0	3.4	10.1	0.4	0.0	0.0	5.7	5.7
Initial Q Delay(d3),s/veh				0.0	0.0	0.0	0.0	0.0	0.0	0.0	0.0	0.0
%ile BackOfQ(50%),veh/ln				4.2	0.0	6.1	6.1	3.9	0.0	0.0	11.3	11.4
Unsig. Movement Delay, s/veh												
LnGrp Delay(d),s/veh				32.2	0.0	37.0	48.8	8.2	0.0	0.0	27.4	27.4
LnGrp LOS				C	A	D	D	A	A	A	C	C
Approach Vol, veh/h					487			1200			1201	
Approach Delay, s/veh					34.9			16.5			27.4	
Approach LOS					C			B			C	

Timer - Assigned Phs	1	2		4		6						
Phs Duration (G+Y+Rc), s	9.5	47.3		27.2		66.9						
Change Period (Y+Rc), s	4.7	5.4		5.1		5.4						
Max Green Setting (Gmax), s	23.8	46.2		37.1		72.4						
Max Q Clear Time (g_c+I1), s	14.6	28.4		17.8		14.0						
Green Ext Time (p_c), s	0.2	13.5		2.2		22.8						

Intersection Summary	
HCM 6th Ctrl Delay	24.1
HCM 6th LOS	C

Notes

* HCM 6th computational engine requires equal clearance times for the phases crossing the barrier.



Movement	EBL	EBT	EBR	WBL	WBT	WBR	NBL	NBT	NBR	SBL	SBT	SBR
Lane Configurations												
Traffic Volume (veh/h)	68	3	237	0	0	0	0	820	287	365	793	0
Future Volume (veh/h)	68	3	237	0	0	0	0	820	287	365	793	0
Initial Q (Qb), veh	0	0	0				0	0	0	0	0	0
Ped-Bike Adj(A_pbT)	1.00		0.97				1.00		0.96	1.00		1.00
Parking Bus, Adj	1.00	1.00	1.00				1.00	1.00	1.00	1.00	1.00	1.00
Work Zone On Approach		No						No			No	
Adj Sat Flow, veh/h/ln	1870	1870	1870				0	1870	1870	1870	1870	0
Adj Flow Rate, veh/h	84	4	293				0	1025	359	440	955	0
Peak Hour Factor	0.81	0.81	0.81				0.80	0.80	0.80	0.83	0.83	0.83
Percent Heavy Veh, %	2	2	2				0	2	2	2	2	0
Cap, veh/h	85	4	298				0	1264	539	469	2350	0
Arrive On Green	0.24	0.24	0.24				0.00	0.36	0.36	0.26	0.66	0.00
Sat Flow, veh/h	349	17	1219				0	3647	1515	1781	3647	0
Grp Volume(v), veh/h	381	0	0				0	1025	359	440	955	0
Grp Sat Flow(s),veh/h/ln	1585	0	0				0	1777	1515	1781	1777	0
Q Serve(g_s), s	26.7	0.0	0.0				0.0	29.2	22.3	27.0	13.9	0.0
Cycle Q Clear(g_c), s	26.7	0.0	0.0				0.0	29.2	22.3	27.0	13.9	0.0
Prop In Lane	0.22		0.77				0.00		1.00	1.00		0.00
Lane Grp Cap(c), veh/h	388	0	0				0	1264	539	469	2350	0
V/C Ratio(X)	0.98	0.00	0.00				0.00	0.81	0.67	0.94	0.41	0.00
Avail Cap(c_a), veh/h	388	0	0				0	1312	559	579	2617	0
HCM Platoon Ratio	1.00	1.00	1.00				1.00	1.00	1.00	1.00	1.00	1.00
Upstream Filter(I)	1.00	0.00	0.00				0.00	1.00	1.00	1.00	1.00	0.00
Uniform Delay (d), s/veh	41.9	0.0	0.0				0.0	32.6	30.4	40.2	8.8	0.0
Incr Delay (d2), s/veh	41.1	0.0	0.0				0.0	5.2	5.4	19.1	0.4	0.0
Initial Q Delay(d3),s/veh	0.0	0.0	0.0				0.0	0.0	0.0	0.0	0.0	0.0
%ile BackOfQ(50%),veh/ln	14.7	0.0	0.0				0.0	12.9	8.6	13.9	4.8	0.0
Unsig. Movement Delay, s/veh												
LnGrp Delay(d),s/veh	83.0	0.0	0.0				0.0	37.8	35.8	59.3	9.2	0.0
LnGrp LOS	F	A	A				A	D	D	E	A	A
Approach Vol, veh/h		381						1384			1395	
Approach Delay, s/veh		83.0						37.3			25.0	
Approach LOS		F						D			C	

Timer - Assigned Phs		2			5	6		8				
Phs Duration (G+Y+Rc), s		79.2			34.1	45.1		32.4				
Change Period (Y+Rc), s		5.4			* 4.7	5.4		5.1				
Max Green Setting (Gmax), s		82.2			* 36	41.2		27.3				
Max Q Clear Time (g_c+I1), s		15.9			29.0	31.2		28.7				
Green Ext Time (p_c), s		23.8			0.4	8.6		0.0				

Intersection Summary												
HCM 6th Ctrl Delay			37.4									
HCM 6th LOS			D									

Notes

* HCM 6th computational engine requires equal clearance times for the phases crossing the barrier.



Movement	EBL	EBT	EBR	WBL	WBT	WBR	NBL	NBT	NBR	SBL	SBT	SBR
Lane Configurations												
Traffic Volume (veh/h)	0	0	0	144	6	57	0	550	294	0	673	66
Future Volume (veh/h)	0	0	0	144	6	57	0	550	294	0	673	66
Initial Q (Qb), veh				0	0	0	0	0	0	0	0	0
Ped-Bike Adj(A_pbT)				1.00		0.96	1.00		0.96	1.00		0.96
Parking Bus, Adj				1.00	1.00	1.00	1.00	1.00	1.00	1.00	1.00	1.00
Work Zone On Approach					No			No			No	
Adj Sat Flow, veh/h/ln				1870	1870	1870	0	1870	1870	0	1870	1870
Adj Flow Rate, veh/h				180	8	71	0	591	316	0	801	79
Peak Hour Factor				0.80	0.80	0.80	0.93	0.93	0.93	0.84	0.84	0.84
Percent Heavy Veh, %				2	2	2	0	2	2	0	2	2
Cap, veh/h				363	16	325	0	1533	657	0	2031	199
Arrive On Green				0.21	0.21	0.21	0.00	0.43	0.43	0.00	0.43	0.43
Sat Flow, veh/h				1709	76	1528	0	3647	1522	0	4876	461
Grp Volume(v), veh/h				188	0	71	0	591	316	0	578	302
Grp Sat Flow(s),veh/h/ln				1785	0	1528	0	1777	1522	0	1702	1765
Q Serve(g_s), s				3.3	0.0	1.3	0.0	4.0	5.2	0.0	4.1	4.1
Cycle Q Clear(g_c), s				3.3	0.0	1.3	0.0	4.0	5.2	0.0	4.1	4.1
Prop In Lane				0.96		1.00	0.00		1.00	0.00		0.26
Lane Grp Cap(c), veh/h				380	0	325	0	1533	657	0	1469	761
V/C Ratio(X)				0.50	0.00	0.22	0.00	0.39	0.48	0.00	0.39	0.40
Avail Cap(c_a), veh/h				2383	0	2040	0	6131	2626	0	5873	3045
HCM Platoon Ratio				1.00	1.00	1.00	1.00	1.00	1.00	1.00	1.00	1.00
Upstream Filter(I)				1.00	0.00	1.00	0.00	1.00	1.00	0.00	1.00	1.00
Uniform Delay (d), s/veh				12.2	0.0	11.4	0.0	6.8	7.2	0.0	6.8	6.8
Incr Delay (d2), s/veh				1.0	0.0	0.3	0.0	0.2	0.5	0.0	0.2	0.3
Initial Q Delay(d3),s/veh				0.0	0.0	0.0	0.0	0.0	0.0	0.0	0.0	0.0
%ile BackOfQ(50%),veh/ln				1.1	0.0	0.4	0.0	0.8	1.0	0.0	0.8	0.9
Unsig. Movement Delay, s/veh												
LnGrp Delay(d),s/veh				13.2	0.0	11.8	0.0	7.0	7.7	0.0	7.0	7.2
LnGrp LOS				B	A	B	A	A	A	A	A	A
Approach Vol, veh/h					259			907			880	
Approach Delay, s/veh					12.8			7.2			7.1	
Approach LOS					B			A			A	

Timer - Assigned Phs	2		6		8			
Phs Duration (G+Y+Rc), s	21.6		21.6		13.6			
Change Period (Y+Rc), s	6.4		6.4		6.1			
Max Green Setting (Gmax), s	60.6		60.6		46.9			
Max Q Clear Time (g_c+I1), s	7.2		6.1		5.3			
Green Ext Time (p_c), s	5.6		6.5		1.4			

Intersection Summary		
HCM 6th Ctrl Delay	7.9	
HCM 6th LOS	A	



Movement	EBL	EBT	EBR	WBL	WBT	WBR	NBL	NBT	NBR	SBL	SBT	SBR
Lane Configurations												
Traffic Volume (veh/h)	46	2	365	0	0	0	0	798	201	115	702	0
Future Volume (veh/h)	46	2	365	0	0	0	0	798	201	115	702	0
Initial Q (Qb), veh	0	0	0				0	0	0	0	0	0
Ped-Bike Adj(A_pbT)	1.00		0.94				1.00		0.96	1.00		1.00
Parking Bus, Adj	1.00	1.00	1.00				1.00	1.00	1.00	1.00	1.00	1.00
Work Zone On Approach		No						No			No	
Adj Sat Flow, veh/h/ln	1870	1870	1870				0	1870	1870	1870	1870	0
Adj Flow Rate, veh/h	53	2	424				0	840	212	128	780	0
Peak Hour Factor	0.86	0.86	0.86				0.95	0.95	0.95	0.90	0.90	0.90
Percent Heavy Veh, %	2	2	2				0	2	2	2	2	0
Cap, veh/h	416	16	637				0	1289	550	168	1960	0
Arrive On Green	0.24	0.24	0.24				0.00	0.36	0.36	0.09	0.55	0.00
Sat Flow, veh/h	1719	65	2636				0	3647	1516	1781	3647	0
Grp Volume(v), veh/h	55	0	424				0	840	212	128	780	0
Grp Sat Flow(s),veh/h/ln	1784	0	1318				0	1777	1516	1781	1777	0
Q Serve(g_s), s	1.5	0.0	8.8				0.0	11.9	6.3	4.2	7.6	0.0
Cycle Q Clear(g_c), s	1.5	0.0	8.8				0.0	11.9	6.3	4.2	7.6	0.0
Prop In Lane	0.96		1.00				0.00		1.00	1.00		0.00
Lane Grp Cap(c), veh/h	432	0	637				0	1289	550	168	1960	0
V/C Ratio(X)	0.13	0.00	0.67				0.00	0.65	0.39	0.76	0.40	0.00
Avail Cap(c_a), veh/h	1059	0	1564				0	2737	1168	568	4205	0
HCM Platoon Ratio	1.00	1.00	1.00				1.00	1.00	1.00	1.00	1.00	1.00
Upstream Filter(I)	1.00	0.00	1.00				0.00	1.00	1.00	1.00	1.00	0.00
Uniform Delay (d), s/veh	17.9	0.0	20.7				0.0	16.1	14.3	26.7	7.8	0.0
Incr Delay (d2), s/veh	0.1	0.0	1.2				0.0	0.6	0.4	6.9	0.1	0.0
Initial Q Delay(d3),s/veh	0.0	0.0	0.0				0.0	0.0	0.0	0.0	0.0	0.0
%ile BackOfQ(50%),veh/ln	0.6	0.0	2.6				0.0	4.1	1.9	2.0	2.1	0.0
Unsig. Movement Delay, s/veh												
LnGrp Delay(d),s/veh	18.1	0.0	21.9				0.0	16.6	14.7	33.6	7.9	0.0
LnGrp LOS	B	A	C				A	B	B	C	A	A
Approach Vol, veh/h		479						1052			908	
Approach Delay, s/veh		21.5						16.3			11.5	
Approach LOS		C						B			B	

Timer - Assigned Phs	1	2	4	6
Phs Duration (G+Y+Rc), s	11.4	28.4	20.7	39.8
Change Period (Y+Rc), s	* 5.7	6.4	6.1	6.4
Max Green Setting (Gmax), s	* 13	46.6	35.9	71.6
Max Q Clear Time (g_c+I1), s	10.2	13.9	10.8	9.6
Green Ext Time (p_c), s	0.2	7.3	2.2	6.0

Intersection Summary	
HCM 6th Ctrl Delay	15.5
HCM 6th LOS	B

Notes

* HCM 6th computational engine requires equal clearance times for the phases crossing the barrier.



Movement	EBL	EBT	EBR	WBL	WBT	WBR	NBL	NBT	NBR	SBL	SBT	SBR
Lane Configurations												
Traffic Volume (veh/h)	39	70	30	3	103	75	26	37	3	103	102	33
Future Volume (veh/h)	39	70	30	3	103	75	26	37	3	103	102	33
Initial Q (Qb), veh	0	0	0	0	0	0	0	0	0	0	0	0
Ped-Bike Adj(A_pbT)	1.00		0.96	1.00		0.95	1.00		0.98	1.00		0.96
Parking Bus, Adj	1.00	1.00	1.00	1.00	1.00	1.00	1.00	1.00	1.00	1.00	1.00	1.00
Work Zone On Approach		No			No			No			No	
Adj Sat Flow, veh/h/ln	1870	1870	1870	1870	1870	1870	1870	1870	1870	1870	1870	1870
Adj Flow Rate, veh/h	44	79	34	3	113	82	38	54	4	111	110	35
Peak Hour Factor	0.89	0.89	0.89	0.91	0.91	0.91	0.69	0.69	0.69	0.93	0.93	0.93
Percent Heavy Veh, %	2	2	2	2	2	2	2	2	2	2	2	2
Cap, veh/h	74	354	288	7	284	229	67	1575	686	143	1291	391
Arrive On Green	0.04	0.19	0.19	0.00	0.15	0.15	0.04	0.44	0.44	0.08	0.49	0.49
Sat Flow, veh/h	1781	1870	1523	1781	1870	1513	1781	3554	1548	1781	2659	806
Grp Volume(v), veh/h	44	79	34	3	113	82	38	54	4	111	72	73
Grp Sat Flow(s),veh/h/ln	1781	1870	1523	1781	1870	1513	1781	1777	1548	1781	1777	1688
Q Serve(g_s), s	1.7	2.4	1.3	0.1	3.7	3.3	1.4	0.6	0.1	4.2	1.5	1.6
Cycle Q Clear(g_c), s	1.7	2.4	1.3	0.1	3.7	3.3	1.4	0.6	0.1	4.2	1.5	1.6
Prop In Lane	1.00		1.00	1.00		1.00	1.00		1.00	1.00		0.48
Lane Grp Cap(c), veh/h	74	354	288	7	284	229	67	1575	686	143	863	820
V/C Ratio(X)	0.60	0.22	0.12	0.42	0.40	0.36	0.57	0.03	0.01	0.78	0.08	0.09
Avail Cap(c_a), veh/h	177	985	802	130	936	757	167	1575	686	271	863	820
HCM Platoon Ratio	1.00	1.00	1.00	1.00	1.00	1.00	1.00	1.00	1.00	1.00	1.00	1.00
Upstream Filter(I)	1.00	1.00	1.00	1.00	1.00	1.00	1.00	1.00	1.00	1.00	1.00	1.00
Uniform Delay (d), s/veh	32.2	23.5	23.0	34.0	26.2	26.0	32.4	10.8	10.6	30.9	9.4	9.5
Incr Delay (d2), s/veh	2.8	0.3	0.2	13.6	0.9	0.9	2.8	0.0	0.0	3.5	0.2	0.2
Initial Q Delay(d3),s/veh	0.0	0.0	0.0	0.0	0.0	0.0	0.0	0.0	0.0	0.0	0.0	0.0
%ile BackOfQ(50%),veh/ln	0.7	1.1	0.4	0.1	1.7	1.2	0.6	0.2	0.0	1.9	0.6	0.6
Unsig. Movement Delay, s/veh												
LnGrp Delay(d),s/veh	35.1	23.8	23.2	47.5	27.1	27.0	35.1	10.8	10.6	34.3	9.6	9.7
LnGrp LOS	D	C	C	D	C	C	D	B	B	C	A	A
Approach Vol, veh/h		157			198			96			256	
Approach Delay, s/veh		26.8			27.3			20.4			20.3	
Approach LOS		C			C			C			C	

Timer - Assigned Phs	1	2	3	4	5	6	7	8
Phs Duration (G+Y+Rc), s	7.2	38.3	7.4	15.5	10.1	35.4	4.9	18.0
Change Period (Y+Rc), s	4.6	5.1	4.6	5.1	4.6	5.1	4.6	5.1
Max Green Setting (Gmax), s	6.4	33.2	6.8	34.2	10.4	29.2	5.0	36.0
Max Q Clear Time (g_c+I1), s	3.4	3.6	3.7	5.7	6.2	2.6	2.1	4.4
Green Ext Time (p_c), s	0.0	1.2	0.0	0.9	0.0	0.4	0.0	0.5

Intersection Summary	
HCM 6th Ctrl Delay	23.8
HCM 6th LOS	C



Movement	EBL	EBT	EBR	WBL	WBT	WBR	NBL	NBT	NBR	SBL	SBT	SBR
Lane Configurations												
Traffic Volume (veh/h)	202	74	135	68	67	308	138	444	55	396	451	150
Future Volume (veh/h)	202	74	135	68	67	308	138	444	55	396	451	150
Initial Q (Qb), veh	0	0	0	0	0	0	0	0	0	0	0	0
Ped-Bike Adj(A_pbT)	1.00		0.96	1.00		0.97	1.00		0.96	1.00		0.97
Parking Bus, Adj	1.00	1.00	1.00	1.00	1.00	1.00	1.00	1.00	1.00	1.00	1.00	1.00
Work Zone On Approach		No			No			No			No	
Adj Sat Flow, veh/h/ln	1870	1870	1870	1870	1870	1870	1870	1870	1870	1870	1870	1870
Adj Flow Rate, veh/h	227	83	152	92	91	416	186	600	74	466	531	176
Peak Hour Factor	0.89	0.89	0.89	0.74	0.74	0.74	0.74	0.74	0.74	0.85	0.85	0.85
Percent Heavy Veh, %	2	2	2	2	2	2	2	2	2	2	2	2
Cap, veh/h	300	315	256	431	453	649	210	689	85	312	729	240
Arrive On Green	0.17	0.17	0.17	0.24	0.24	0.24	0.12	0.22	0.22	0.18	0.28	0.28
Sat Flow, veh/h	1781	1870	1518	1781	1870	1533	1781	3170	390	1781	2603	858
Grp Volume(v), veh/h	227	83	152	92	91	416	186	336	338	466	362	345
Grp Sat Flow(s),veh/h/ln	1781	1870	1518	1781	1870	1533	1781	1777	1783	1781	1777	1684
Q Serve(g_s), s	16.4	5.2	12.5	5.6	5.2	29.2	13.9	24.5	24.7	23.6	24.8	25.0
Cycle Q Clear(g_c), s	16.4	5.2	12.5	5.6	5.2	29.2	13.9	24.5	24.7	23.6	24.8	25.0
Prop In Lane	1.00		1.00	1.00		1.00	1.00		0.22	1.00		0.51
Lane Grp Cap(c), veh/h	300	315	256	431	453	649	210	386	388	312	497	471
V/C Ratio(X)	0.76	0.26	0.59	0.21	0.20	0.64	0.89	0.87	0.87	1.49	0.73	0.73
Avail Cap(c_a), veh/h	436	458	372	476	500	687	226	408	409	312	505	479
HCM Platoon Ratio	1.00	1.00	1.00	1.00	1.00	1.00	1.00	1.00	1.00	1.00	1.00	1.00
Upstream Filter(I)	1.00	1.00	1.00	1.00	1.00	1.00	1.00	1.00	1.00	1.00	1.00	1.00
Uniform Delay (d), s/veh	53.4	48.7	51.7	40.8	40.7	31.4	58.5	50.9	50.9	55.5	43.8	43.9
Incr Delay (d2), s/veh	5.9	0.6	3.1	0.1	0.1	1.3	28.8	21.1	21.5	238.0	8.0	8.6
Initial Q Delay(d3),s/veh	0.0	0.0	0.0	0.0	0.0	0.0	0.0	0.0	0.0	0.0	0.0	0.0
%ile BackOfQ(50%),veh/ln	7.7	2.5	4.9	2.4	2.4	10.8	7.8	13.0	13.1	31.1	11.8	11.4
Unsig. Movement Delay, s/veh												
LnGrp Delay(d),s/veh	59.3	49.3	54.9	40.9	40.7	32.7	87.3	72.0	72.4	293.6	51.8	52.5
LnGrp LOS	E	D	D	D	D	C	F	E	E	F	D	D
Approach Vol, veh/h		462			599			860			1173	
Approach Delay, s/veh		56.0			35.2			75.4			148.1	
Approach LOS		E			D			E			F	

Timer - Assigned Phs	1	2		4	5	6		8
Phs Duration (G+Y+Rc), s	20.6	45.0		39.0	29.0	36.6		30.1
Change Period (Y+Rc), s	* 4.7	* 7.3		6.4	5.4	7.3		7.4
Max Green Setting (Gmax), s	* 16	* 38		36.0	23.6	30.9		33.0
Max Q Clear Time (g_c+I1), s	15.9	27.0		31.2	25.6	26.7		18.4
Green Ext Time (p_c), s	0.0	6.2		0.7	0.0	2.6		2.2

Intersection Summary	
HCM 6th Ctrl Delay	92.3
HCM 6th LOS	F

Notes

* HCM 6th computational engine requires equal clearance times for the phases crossing the barrier.

Intersection	
Int Delay, s/veh	0.4

Movement	EBL	EBR	NBL	NBT	SBT	SBR
Lane Configurations						
Traffic Vol, veh/h	7	119	45	380	480	7
Future Vol, veh/h	7	119	45	380	480	7
Conflicting Peds, #/hr	10	10	10	0	0	10
Sign Control	Free	Free	Free	Free	Stop	Stop
RT Channelized	-	None	-	None	-	None
Storage Length	0	-	-	-	-	-
Veh in Median Storage, #	2	-	-	0	0	-
Grade, %	0	-	-	0	0	-
Peak Hour Factor	85	85	85	85	73	73
Heavy Vehicles, %	2	2	2	2	2	2
Mvmt Flow	8	140	53	447	658	10

Major/Minor	Major1		Minor2	
Conflicting Flow All	10	0	563	20
Stage 1	-	-	10	-
Stage 2	-	-	553	-
Critical Hdwy	4.14	-	6.54	6.94
Critical Hdwy Stg 1	-	-	-	-
Critical Hdwy Stg 2	-	-	5.54	-
Follow-up Hdwy	2.22	-	4.02	3.32
Pot Cap-1 Maneuver	1608	-	~ 434	1053
Stage 1	-	-	-	-
Stage 2	-	-	~ 513	-
Platoon blocked, %		-		
Mov Cap-1 Maneuver	1593	-	0	1033
Mov Cap-2 Maneuver	-	-	0	-
Stage 1	-	-	0	-
Stage 2	-	-	0	-

Approach	NB	SB
HCM Control Delay, s	0.9	
HCM LOS		-

Minor Lane/Major Mvmt	NBL	NBT	SBLn1	SBLn2
Capacity (veh/h)	1593	-	-	1033
HCM Lane V/C Ratio	0.033	-	-	0.328
HCM Control Delay (s)	7.3	0.1	-	10.2
HCM Lane LOS	A	A	-	B
HCM 95th %tile Q(veh)	0.1	-	-	1.4

Notes			
~: Volume exceeds capacity	$: Delay exceeds 300s	+: Computation Not Defined	*: All major volume in platoon



Movement	WBL	WBR	NBT	NBR	SBL	SBT
Lane Configurations						
Traffic Volume (veh/h)	103	216	243	59	188	430
Future Volume (veh/h)	103	216	243	59	188	430
Initial Q (Qb), veh	0	0	0	0	0	0
Ped-Bike Adj(A_pbT)	1.00	1.00		0.94	1.00	
Parking Bus, Adj	1.00	1.00	1.00	1.00	1.00	1.00
Work Zone On Approach	No		No			No
Adj Sat Flow, veh/h/ln	1870	1870	1870	1870	1870	1870
Adj Flow Rate, veh/h	191	400	264	64	202	462
Peak Hour Factor	0.54	0.54	0.92	0.92	0.93	0.93
Percent Heavy Veh, %	2	2	2	2	2	2
Cap, veh/h	539	480	680	161	254	865
Arrive On Green	0.30	0.30	0.24	0.24	0.14	0.46
Sat Flow, veh/h	1781	1585	2909	666	1781	1870
Grp Volume(v), veh/h	191	400	164	164	202	462
Grp Sat Flow(s),veh/h/ln	1781	1585	1777	1705	1781	1870
Q Serve(g_s), s	5.0	14.0	4.6	4.8	6.5	10.5
Cycle Q Clear(g_c), s	5.0	14.0	4.6	4.8	6.5	10.5
Prop In Lane	1.00	1.00		0.39	1.00	
Lane Grp Cap(c), veh/h	539	480	429	412	254	865
V/C Ratio(X)	0.35	0.83	0.38	0.40	0.80	0.53
Avail Cap(c_a), veh/h	1606	1429	1197	1148	1113	2620
HCM Platoon Ratio	1.00	1.00	1.00	1.00	1.00	1.00
Upstream Filter(I)	1.00	1.00	1.00	1.00	1.00	1.00
Uniform Delay (d), s/veh	16.3	19.4	18.9	19.0	24.8	11.4
Incr Delay (d2), s/veh	0.4	3.9	2.0	2.3	2.2	1.9
Initial Q Delay(d3),s/veh	0.0	0.0	0.0	0.0	0.0	0.0
%ile BackOfQ(50%),veh/ln	1.8	11.8	1.9	1.9	2.6	3.9
Unsig. Movement Delay, s/veh						
LnGrp Delay(d),s/veh	16.6	23.3	20.9	21.2	26.9	13.3
LnGrp LOS	B	C	C	C	C	B
Approach Vol, veh/h	591		328			664
Approach Delay, s/veh	21.1		21.1			17.4
Approach LOS	C		C			B

Timer - Assigned Phs		2		4	5	6
Phs Duration (G+Y+Rc), s		35.4		24.3	13.2	22.2
Change Period (Y+Rc), s		* 7.8		6.2	* 4.7	7.8
Max Green Setting (Gmax), s		* 84		53.8	* 37	40.2
Max Q Clear Time (g_c+I1), s		12.5		16.0	8.5	6.8
Green Ext Time (p_c), s		9.0		2.0	0.3	4.9

Intersection Summary	
HCM 6th Ctrl Delay	19.6
HCM 6th LOS	B

Notes

* HCM 6th computational engine requires equal clearance times for the phases crossing the barrier.

Intersection	
Int Delay, s/veh	1.5

Movement	EBT	EBR	WBL	WBT	NBL	NBR
Lane Configurations						
Traffic Vol, veh/h	310	39	45	209	15	40
Future Vol, veh/h	310	39	45	209	15	40
Conflicting Peds, #/hr	0	10	10	0	10	10
Sign Control	Free	Free	Free	Free	Stop	Stop
RT Channelized	-	None	-	None	-	None
Storage Length	-	-	-	-	0	-
Veh in Median Storage, #	0	-	-	0	0	-
Grade, %	0	-	-	0	0	-
Peak Hour Factor	67	67	91	91	86	86
Heavy Vehicles, %	2	2	2	2	2	2
Mvmt Flow	463	58	49	230	17	47

Major/Minor	Major1		Major2		Minor1	
Conflicting Flow All	0	0	531	0	840	512
Stage 1	-	-	-	-	502	-
Stage 2	-	-	-	-	338	-
Critical Hdwy	-	-	4.12	-	6.42	6.22
Critical Hdwy Stg 1	-	-	-	-	5.42	-
Critical Hdwy Stg 2	-	-	-	-	5.42	-
Follow-up Hdwy	-	-	2.218	-	3.518	3.318
Pot Cap-1 Maneuver	-	-	1036	-	335	562
Stage 1	-	-	-	-	608	-
Stage 2	-	-	-	-	722	-
Platoon blocked, %	-	-		-		
Mov Cap-1 Maneuver	-	-	1026	-	310	551
Mov Cap-2 Maneuver	-	-	-	-	310	-
Stage 1	-	-	-	-	602	-
Stage 2	-	-	-	-	676	-

Approach	EB	WB	NB
HCM Control Delay, s	0	1.5	14.2
HCM LOS			B

Minor Lane/Major Mvmt	NBLn1	EBT	EBR	WBL	WBT
Capacity (veh/h)	455	-	-	1026	-
HCM Lane V/C Ratio	0.141	-	-	0.048	-
HCM Control Delay (s)	14.2	-	-	8.7	0
HCM Lane LOS	B	-	-	A	A
HCM 95th %tile Q(veh)	0.5	-	-	0.2	-

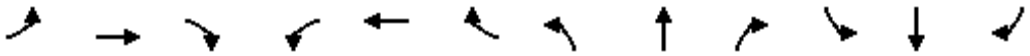

Movement	EBL	EBT	EBR	WBL	WBT	WBR	NBL	NBT	NBR	SBL	SBT	SBR
Lane Configurations												
Traffic Volume (veh/h)	81	184	82	39	101	178	91	349	33	263	436	60
Future Volume (veh/h)	81	184	82	39	101	178	91	349	33	263	436	60
Initial Q (Qb), veh	0	0	0	0	0	0	0	0	0	0	0	0
Ped-Bike Adj(A_pbT)	1.00		0.97	1.00		1.00	1.00		0.96	1.00		0.97
Parking Bus, Adj	1.00	1.00	1.00	1.00	1.00	1.00	1.00	1.00	1.00	1.00	1.00	1.00
Work Zone On Approach		No			No			No			No	
Adj Sat Flow, veh/h/ln	1870	1870	1870	1870	1870	1870	1870	1870	1870	1870	1870	1870
Adj Flow Rate, veh/h	119	271	121	43	112	0	93	356	34	280	464	64
Peak Hour Factor	0.68	0.68	0.68	0.90	0.90	0.90	0.98	0.98	0.98	0.94	0.94	0.94
Percent Heavy Veh, %	2	2	2	2	2	2	2	2	2	2	2	2
Cap, veh/h	157	562	243	75	672		122	748	322	345	1049	144
Arrive On Green	0.09	0.24	0.24	0.04	0.19	0.00	0.07	0.21	0.21	0.19	0.34	0.34
Sat Flow, veh/h	1781	2388	1032	1781	3554	1585	1781	3554	1528	1781	3127	429
Grp Volume(v), veh/h	119	199	193	43	112	0	93	356	34	280	262	266
Grp Sat Flow(s),veh/h/ln	1781	1777	1642	1781	1777	1585	1781	1777	1528	1781	1777	1779
Q Serve(g_s), s	4.1	6.1	6.4	1.5	1.7	0.0	3.2	5.5	1.1	9.5	7.3	7.4
Cycle Q Clear(g_c), s	4.1	6.1	6.4	1.5	1.7	0.0	3.2	5.5	1.1	9.5	7.3	7.4
Prop In Lane	1.00		0.63	1.00		1.00	1.00		1.00	1.00		0.24
Lane Grp Cap(c), veh/h	157	418	386	75	672		122	748	322	345	596	597
V/C Ratio(X)	0.76	0.48	0.50	0.58	0.17		0.76	0.48	0.11	0.81	0.44	0.45
Avail Cap(c_a), veh/h	576	1237	1144	294	1911		492	1984	853	1142	1640	1642
HCM Platoon Ratio	1.00	1.00	1.00	1.00	1.00	1.00	1.00	1.00	1.00	1.00	1.00	1.00
Upstream Filter(I)	1.00	1.00	1.00	1.00	1.00	0.00	1.00	1.00	1.00	1.00	1.00	1.00
Uniform Delay (d), s/veh	28.1	20.8	20.9	29.6	21.4	0.0	28.9	21.8	20.1	24.3	16.3	16.4
Incr Delay (d2), s/veh	7.3	0.8	1.0	6.8	0.1	0.0	9.4	0.5	0.1	4.6	0.5	0.5
Initial Q Delay(d3),s/veh	0.0	0.0	0.0	0.0	0.0	0.0	0.0	0.0	0.0	0.0	0.0	0.0
%ile BackOfQ(50%),veh/ln	1.9	2.4	2.3	0.7	0.6	0.0	1.6	2.1	0.4	4.0	2.6	2.7
Unsig. Movement Delay, s/veh												
LnGrp Delay(d),s/veh	35.4	21.6	21.9	36.5	21.5	0.0	38.2	22.3	20.2	29.0	16.8	16.9
LnGrp LOS	D	C	C	D	C		D	C	C	C	B	B
Approach Vol, veh/h		511			155	A		483			808	
Approach Delay, s/veh		24.9			25.7			25.2			21.1	
Approach LOS		C			C			C			C	

Timer - Assigned Phs	1	2	3	4	5	6	7	8
Phs Duration (G+Y+Rc), s	16.8	19.1	7.2	19.9	8.9	26.9	10.1	17.0
Change Period (Y+Rc), s	4.6	5.8	4.6	5.1	4.6	5.8	4.6	5.1
Max Green Setting (Gmax), s	40.4	35.2	10.4	43.9	17.4	58.2	20.4	33.9
Max Q Clear Time (g_c+I1), s	11.5	7.5	3.5	8.4	5.2	9.4	6.1	3.7
Green Ext Time (p_c), s	0.8	2.3	0.0	2.4	0.1	3.3	0.2	0.6

Intersection Summary	
HCM 6th Ctrl Delay	23.5
HCM 6th LOS	C

Notes

Unsignalized Delay for [WBR] is excluded from calculations of the approach delay and intersection delay.

Intersection	
Intersection Delay, s/veh	9.5
Intersection LOS	A

Movement	EBL	EBT	EBR	WBL	WBT	WBR	NBL	NBT	NBR	SBL	SBT	SBR
Lane Configurations												
Traffic Vol, veh/h	34	65	8	7	67	40	9	35	28	29	29	32
Future Vol, veh/h	34	65	8	7	67	40	9	35	28	29	29	32
Peak Hour Factor	0.74	0.74	0.74	0.79	0.79	0.79	0.45	0.45	0.45	0.87	0.87	0.87
Heavy Vehicles, %	2	2	2	2	2	2	2	2	2	2	2	2
Mvmt Flow	46	88	11	9	85	51	20	78	62	33	33	37
Number of Lanes	0	1	1	0	1	0	0	1	0	0	1	1

Approach	EB	WB	NB	SB
Opposing Approach	WB	EB	SB	NB
Opposing Lanes	1	2	2	1
Conflicting Approach Left	SB	NB	EB	WB
Conflicting Lanes Left	2	1	2	1
Conflicting Approach Right	NB	SB	WB	EB
Conflicting Lanes Right	1	2	1	2
HCM Control Delay	9.6	9.7	9.9	8.7
HCM LOS	A	A	A	A

Lane	NBLn1	EBLn1	EBLn2	WBLn1	SBLn1	SBLn2
Vol Left, %	12%	34%	0%	6%	50%	0%
Vol Thru, %	49%	66%	0%	59%	50%	0%
Vol Right, %	39%	0%	100%	35%	0%	100%
Sign Control	Stop	Stop	Stop	Stop	Stop	Stop
Traffic Vol by Lane	72	99	8	114	58	32
LT Vol	9	34	0	7	29	0
Through Vol	35	65	0	67	29	0
RT Vol	28	0	8	40	0	32
Lane Flow Rate	160	134	11	144	67	37
Geometry Grp	6	7	7	6	7	7
Degree of Util (X)	0.232	0.206	0.014	0.209	0.106	0.049
Departure Headway (Hd)	5.231	5.546	4.668	5.226	5.727	4.769
Convergence, Y/N	Yes	Yes	Yes	Yes	Yes	Yes
Cap	683	645	762	684	623	746
Service Time	3.288	3.304	2.425	3.284	3.488	2.53
HCM Lane V/C Ratio	0.234	0.208	0.014	0.211	0.108	0.05
HCM Control Delay	9.9	9.8	7.5	9.7	9.2	7.8
HCM Lane LOS	A	A	A	A	A	A
HCM 95th-tile Q	0.9	0.8	0	0.8	0.4	0.2

Intersection	
Intersection Delay, s/veh	10.1
Intersection LOS	B

Movement	EBL	EBT	EBR	WBL	WBT	WBR	NBL	NBT	NBR	SBL	SBT	SBR
Lane Configurations												
Traffic Vol, veh/h	4	57	21	2	64	120	19	67	1	74	110	8
Future Vol, veh/h	4	57	21	2	64	120	19	67	1	74	110	8
Peak Hour Factor	0.68	0.68	0.68	0.66	0.66	0.66	0.70	0.70	0.70	0.84	0.84	0.84
Heavy Vehicles, %	2	2	2	2	2	2	2	2	2	2	2	2
Mvmt Flow	6	84	31	3	97	182	27	96	1	88	131	10
Number of Lanes	0	1	0	0	1	0	0	1	0	0	1	0

Approach	EB	WB	NB	SB
Opposing Approach	WB	EB	SB	NB
Opposing Lanes	1	1	1	1
Conflicting Approach Left	SB	NB	EB	WB
Conflicting Lanes Left	1	1	1	1
Conflicting Approach Right	NB	SB	WB	EB
Conflicting Lanes Right	1	1	1	1
HCM Control Delay	9.2	10.3	9.5	10.6
HCM LOS	A	B	A	B

Lane	NBLn1	EBLn1	WBLn1	SBLn1
Vol Left, %	22%	5%	1%	39%
Vol Thru, %	77%	70%	34%	57%
Vol Right, %	1%	26%	65%	4%
Sign Control	Stop	Stop	Stop	Stop
Traffic Vol by Lane	87	82	186	192
LT Vol	19	4	2	74
Through Vol	67	57	64	110
RT Vol	1	21	120	8
Lane Flow Rate	124	121	282	229
Geometry Grp	1	1	1	1
Degree of Util (X)	0.184	0.169	0.36	0.323
Departure Headway (Hd)	5.329	5.041	4.604	5.092
Convergence, Y/N	Yes	Yes	Yes	Yes
Cap	677	702	772	697
Service Time	3.329	3.141	2.686	3.188
HCM Lane V/C Ratio	0.183	0.172	0.365	0.329
HCM Control Delay	9.5	9.2	10.3	10.6
HCM Lane LOS	A	A	B	B
HCM 95th-tile Q	0.7	0.6	1.6	1.4

Intersection	
Intersection Delay, s/veh	12.8
Intersection LOS	B

Movement	EBL	EBT	EBR	WBL	WBT	WBR	NBL	NBT	NBR	SBL	SBT	SBR
Lane Configurations												
Traffic Vol, veh/h	76	149	12	9	102	44	32	106	32	87	158	49
Future Vol, veh/h	76	149	12	9	102	44	32	106	32	87	158	49
Peak Hour Factor	0.86	0.86	0.86	0.86	0.86	0.86	0.65	0.65	0.65	0.85	0.85	0.85
Heavy Vehicles, %	2	2	2	2	2	2	2	2	2	2	2	2
Mvmt Flow	88	173	14	10	119	51	49	163	49	102	186	58
Number of Lanes	1	1	0	0	1	0	1	1	0	1	1	0

Approach	EB	WB	NB	SB
Opposing Approach	WB	EB	SB	NB
Opposing Lanes	1	2	2	2
Conflicting Approach Left	SB	NB	EB	WB
Conflicting Lanes Left	2	2	2	1
Conflicting Approach Right	NB	SB	WB	EB
Conflicting Lanes Right	2	2	1	2
HCM Control Delay	12.5	13.2	12.6	13
HCM LOS	B	B	B	B

Lane	NBLn1	NBLn2	EBLn1	EBLn2	WBLn1	SBLn1	SBLn2
Vol Left, %	100%	0%	100%	0%	6%	100%	0%
Vol Thru, %	0%	77%	0%	93%	66%	0%	76%
Vol Right, %	0%	23%	0%	7%	28%	0%	24%
Sign Control	Stop	Stop	Stop	Stop	Stop	Stop	Stop
Traffic Vol by Lane	32	138	76	161	155	87	207
LT Vol	32	0	76	0	9	87	0
Through Vol	0	106	0	149	102	0	158
RT Vol	0	32	0	12	44	0	49
Lane Flow Rate	49	212	88	187	180	102	244
Geometry Grp	7	7	7	7	6	7	7
Degree of Util (X)	0.097	0.379	0.176	0.344	0.336	0.198	0.426
Departure Headway (Hd)	7.11	6.434	7.185	6.623	6.715	6.974	6.296
Convergence, Y/N	Yes	Yes	Yes	Yes	Yes	Yes	Yes
Cap	501	556	497	539	532	512	567
Service Time	4.895	4.219	4.969	4.407	4.804	4.753	4.075
HCM Lane V/C Ratio	0.098	0.381	0.177	0.347	0.338	0.199	0.43
HCM Control Delay	10.7	13.1	11.5	12.9	13.2	11.5	13.7
HCM Lane LOS	B	B	B	B	B	B	B
HCM 95th-tile Q	0.3	1.8	0.6	1.5	1.5	0.7	2.1



Movement	EBL	EBT	EBR	WBL	WBT	WBR	NBL	NBT	NBR	SBL	SBT	SBR
Lane Configurations												
Traffic Volume (veh/h)	33	198	37	1	100	63	19	104	3	88	273	37
Future Volume (veh/h)	33	198	37	1	100	63	19	104	3	88	273	37
Initial Q (Qb), veh	0	0	0	0	0	0	0	0	0	0	0	0
Ped-Bike Adj(A_pbT)	0.99		0.95	0.99		0.95	1.00		0.95	1.00		0.96
Parking Bus, Adj	1.00	1.00	1.00	1.00	1.00	1.00	1.00	1.00	1.00	1.00	1.00	1.00
Work Zone On Approach		No			No			No			No	
Adj Sat Flow, veh/h/ln	1870	1870	1870	1870	1870	1870	1870	1870	1870	1870	1870	1870
Adj Flow Rate, veh/h	45	268	50	1	105	66	22	122	4	101	314	43
Peak Hour Factor	0.74	0.74	0.74	0.95	0.95	0.95	0.85	0.85	0.85	0.87	0.87	0.87
Percent Heavy Veh, %	2	2	2	2	2	2	2	2	2	2	2	2
Cap, veh/h	105	393	69	60	302	189	64	515	17	168	553	76
Arrive On Green	0.29	0.29	0.29	0.29	0.29	0.29	0.04	0.29	0.29	0.09	0.35	0.35
Sat Flow, veh/h	132	1367	239	2	1052	656	1781	1797	59	1781	1600	219
Grp Volume(v), veh/h	363	0	0	172	0	0	22	0	126	101	0	357
Grp Sat Flow(s),veh/h/ln	1739	0	0	1710	0	0	1781	0	1856	1781	0	1819
Q Serve(g_s), s	4.8	0.0	0.0	0.0	0.0	0.0	0.7	0.0	3.1	3.3	0.0	9.7
Cycle Q Clear(g_c), s	11.2	0.0	0.0	4.8	0.0	0.0	0.7	0.0	3.1	3.3	0.0	9.7
Prop In Lane	0.12		0.14	0.01		0.38	1.00		0.03	1.00		0.12
Lane Grp Cap(c), veh/h	566	0	0	551	0	0	64	0	532	168	0	628
V/C Ratio(X)	0.64	0.00	0.00	0.31	0.00	0.00	0.35	0.00	0.24	0.60	0.00	0.57
Avail Cap(c_a), veh/h	1772	0	0	1762	0	0	273	0	1485	626	0	1803
HCM Platoon Ratio	1.00	1.00	1.00	1.00	1.00	1.00	1.00	1.00	1.00	1.00	1.00	1.00
Upstream Filter(I)	1.00	0.00	0.00	1.00	0.00	0.00	1.00	0.00	1.00	1.00	0.00	1.00
Uniform Delay (d), s/veh	19.3	0.0	0.0	17.1	0.0	0.0	28.5	0.0	16.5	26.4	0.0	16.2
Incr Delay (d2), s/veh	1.2	0.0	0.0	0.3	0.0	0.0	1.2	0.0	1.0	1.3	0.0	3.7
Initial Q Delay(d3),s/veh	0.0	0.0	0.0	0.0	0.0	0.0	0.0	0.0	0.0	0.0	0.0	0.0
%ile BackOfQ(50%),veh/ln	4.4	0.0	0.0	1.8	0.0	0.0	0.3	0.0	1.3	1.3	0.0	4.0
Unsig. Movement Delay, s/veh												
LnGrp Delay(d),s/veh	20.5	0.0	0.0	17.4	0.0	0.0	29.7	0.0	17.6	27.6	0.0	19.9
LnGrp LOS	C	A	A	B	A	A	C	A	B	C	A	B
Approach Vol, veh/h		363			172			148			458	
Approach Delay, s/veh		20.5			17.4			19.4			21.6	
Approach LOS		C			B			B			C	

Timer - Assigned Phs	1	2		4	5	6		8
Phs Duration (G+Y+Rc), s	6.9	28.8		24.9	10.4	25.3		24.9
Change Period (Y+Rc), s	* 4.7	7.9		7.5	* 4.7	* 7.9		7.5
Max Green Setting (Gmax), s	* 9.3	60.1		60.5	* 21	* 49		60.5
Max Q Clear Time (g_c+I1), s	2.7	11.7		6.8	5.3	5.1		13.2
Green Ext Time (p_c), s	0.0	7.9		1.2	0.1	2.3		2.6

Intersection Summary		
HCM 6th Ctrl Delay		20.3
HCM 6th LOS		C

Notes

* HCM 6th computational engine requires equal clearance times for the phases crossing the barrier.

Intersection	
Int Delay, s/veh	2.4

Movement	EBL	EBT	EBR	WBL	WBT	WBR	NBL	NBT	NBR	SBL	SBT	SBR
Lane Configurations		⇕			⇕			⇕			⇕	
Traffic Vol, veh/h	14	276	0	0	160	33	0	0	0	54	0	10
Future Vol, veh/h	14	276	0	0	160	33	0	0	0	54	0	10
Conflicting Peds, #/hr	10	0	10	10	0	10	10	0	10	10	0	10
Sign Control	Free	Free	Free	Free	Free	Free	Stop	Stop	Stop	Stop	Stop	Stop
RT Channelized	-	-	None	-	-	None	-	-	None	-	-	None
Storage Length	-	-	-	-	-	-	-	-	-	-	-	-
Veh in Median Storage, #	-	0	-	-	0	-	-	0	-	-	0	-
Grade, %	-	0	-	-	0	-	-	0	-	-	0	-
Peak Hour Factor	82	82	82	95	95	95	92	92	92	68	68	68
Heavy Vehicles, %	2	2	2	2	2	2	2	2	2	2	2	2
Mvmt Flow	17	337	0	0	168	35	0	0	0	79	0	15

Major/Minor	Major1			Major2			Minor1			Minor2		
Conflicting Flow All	213	0	0	347	0	0	584	594	357	577	577	206
Stage 1	-	-	-	-	-	-	381	381	-	196	196	-
Stage 2	-	-	-	-	-	-	203	213	-	381	381	-
Critical Hdwy	4.12	-	-	4.12	-	-	7.12	6.52	6.22	7.12	6.52	6.22
Critical Hdwy Stg 1	-	-	-	-	-	-	6.12	5.52	-	6.12	5.52	-
Critical Hdwy Stg 2	-	-	-	-	-	-	6.12	5.52	-	6.12	5.52	-
Follow-up Hdwy	2.218	-	-	2.218	-	-	3.518	4.018	3.318	3.518	4.018	3.318
Pot Cap-1 Maneuver	1357	-	-	1212	-	-	423	418	687	428	427	835
Stage 1	-	-	-	-	-	-	641	613	-	806	739	-
Stage 2	-	-	-	-	-	-	799	726	-	641	613	-
Platoon blocked, %		-	-		-	-						
Mov Cap-1 Maneuver	1344	-	-	1200	-	-	403	403	674	415	412	819
Mov Cap-2 Maneuver	-	-	-	-	-	-	403	403	-	415	412	-
Stage 1	-	-	-	-	-	-	625	597	-	786	732	-
Stage 2	-	-	-	-	-	-	777	719	-	625	597	-

Approach	EB	WB	NB	SB
HCM Control Delay, s	0.4	0	0	15.1
HCM LOS			A	C

Minor Lane/Major Mvmt	NBLn1	EBL	EBT	EBR	WBL	WBT	WBR	SBLn1
Capacity (veh/h)	-	1344	-	-	1200	-	-	450
HCM Lane V/C Ratio	-	0.013	-	-	-	-	-	0.209
HCM Control Delay (s)	0	7.7	0	-	0	-	-	15.1
HCM Lane LOS	A	A	A	-	A	-	-	C
HCM 95th %tile Q(veh)	-	0	-	-	0	-	-	0.8

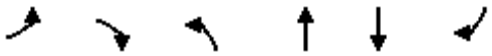

Movement	EBL	EBR	NBL	NBT	SBT	SBR
Lane Configurations						
Traffic Volume (veh/h)	76	259	136	348	459	48
Future Volume (veh/h)	76	259	136	348	459	48
Initial Q (Qb), veh	0	0	0	0	0	0
Ped-Bike Adj(A_pbT)	1.00	1.00	1.00			0.96
Parking Bus, Adj	1.00	1.00	1.00	1.00	1.00	1.00
Work Zone On Approach	No			No	No	
Adj Sat Flow, veh/h/ln	1870	1870	1870	1870	1870	1870
Adj Flow Rate, veh/h	97	332	146	374	494	52
Peak Hour Factor	0.78	0.78	0.93	0.93	0.93	0.93
Percent Heavy Veh, %	2	2	2	2	2	2
Cap, veh/h	412	541	196	1049	622	65
Arrive On Green	0.23	0.23	0.11	0.56	0.38	0.38
Sat Flow, veh/h	1781	1585	1781	1870	1656	174
Grp Volume(v), veh/h	97	332	146	374	0	546
Grp Sat Flow(s),veh/h/ln	1781	1585	1781	1870	0	1830
Q Serve(g_s), s	2.3	9.2	4.2	5.8	0.0	14.1
Cycle Q Clear(g_c), s	2.3	9.2	4.2	5.8	0.0	14.1
Prop In Lane	1.00	1.00	1.00			0.10
Lane Grp Cap(c), veh/h	412	541	196	1049	0	687
V/C Ratio(X)	0.24	0.61	0.75	0.36	0.00	0.79
Avail Cap(c_a), veh/h	673	773	1145	4206	0	2801
HCM Platoon Ratio	1.00	1.00	1.00	1.00	1.00	1.00
Upstream Filter(I)	1.00	1.00	1.00	1.00	0.00	1.00
Uniform Delay (d), s/veh	16.5	14.5	22.8	6.4	0.0	14.7
Incr Delay (d2), s/veh	0.3	1.1	5.6	0.2	0.0	2.1
Initial Q Delay(d3),s/veh	0.0	0.0	0.0	0.0	0.0	0.0
%ile BackOfQ(50%),veh/ln	0.9	0.2	1.9	1.5	0.0	4.9
Unsig. Movement Delay, s/veh						
LnGrp Delay(d),s/veh	16.8	15.7	28.4	6.6	0.0	16.9
LnGrp LOS	B	B	C	A	A	B
Approach Vol, veh/h	429			520	546	
Approach Delay, s/veh	15.9			12.7	16.9	
Approach LOS	B			B	B	

Timer - Assigned Phs		2		4	5	6
Phs Duration (G+Y+Rc), s		35.7		17.2	9.8	25.9
Change Period (Y+Rc), s		6.0		5.0	4.0	6.0
Max Green Setting (Gmax), s		119.0		20.0	34.0	81.0
Max Q Clear Time (g_c+I1), s		7.8		11.2	6.2	16.1
Green Ext Time (p_c), s		2.3		1.0	0.4	3.8

Intersection Summary		
HCM 6th Ctrl Delay		15.1
HCM 6th LOS		B



Movement	WBL	WBR	NBT	NBR	SBL	SBT
Lane Configurations						
Traffic Volume (veh/h)	24	46	401	23	37	483
Future Volume (veh/h)	24	46	401	23	37	483
Initial Q (Qb), veh	0	0	0	0	0	0
Ped-Bike Adj(A_pbT)	1.00	1.00		0.96	1.00	
Parking Bus, Adj	1.00	1.00	1.00	1.00	1.00	1.00
Work Zone On Approach	No		No			No
Adj Sat Flow, veh/h/ln	1870	1870	1870	1870	1870	1870
Adj Flow Rate, veh/h	29	55	441	25	39	508
Peak Hour Factor	0.83	0.83	0.91	0.91	0.95	0.95
Percent Heavy Veh, %	2	2	2	2	2	2
Cap, veh/h	149	206	659	37	82	1037
Arrive On Green	0.08	0.08	0.38	0.38	0.05	0.55
Sat Flow, veh/h	1781	1585	1748	99	1781	1870
Grp Volume(v), veh/h	29	55	0	466	39	508
Grp Sat Flow(s),veh/h/ln	1781	1585	0	1847	1781	1870
Q Serve(g_s), s	0.5	1.0	0.0	6.4	0.6	5.0
Cycle Q Clear(g_c), s	0.5	1.0	0.0	6.4	0.6	5.0
Prop In Lane	1.00	1.00		0.05	1.00	
Lane Grp Cap(c), veh/h	149	206	0	696	82	1037
V/C Ratio(X)	0.19	0.27	0.00	0.67	0.47	0.49
Avail Cap(c_a), veh/h	879	855	0	6197	1054	7627
HCM Platoon Ratio	1.00	1.00	1.00	1.00	1.00	1.00
Upstream Filter(I)	1.00	1.00	0.00	1.00	1.00	1.00
Uniform Delay (d), s/veh	13.0	11.9	0.0	7.9	14.1	4.1
Incr Delay (d2), s/veh	0.6	0.7	0.0	1.1	4.2	0.4
Initial Q Delay(d3),s/veh	0.0	0.0	0.0	0.0	0.0	0.0
%ile BackOfQ(50%),veh/ln	0.2	0.3	0.0	1.4	0.3	0.4
Unsig. Movement Delay, s/veh						
LnGrp Delay(d),s/veh	13.6	12.6	0.0	9.0	18.3	4.5
LnGrp LOS	B	B	A	A	B	A
Approach Vol, veh/h	84		466			547
Approach Delay, s/veh	13.0		9.0			5.5
Approach LOS	B		A			A

Timer - Assigned Phs	1	2			6	8
Phs Duration (G+Y+Rc), s	5.4	17.5			22.9	7.5
Change Period (Y+Rc), s	4.0	6.0			6.0	5.0
Max Green Setting (Gmax), s	18.0	102.0			124.0	15.0
Max Q Clear Time (g_c+I1), s	2.6	8.4			7.0	3.0
Green Ext Time (p_c), s	0.0	3.1			3.4	0.1

Intersection Summary	
HCM 6th Ctrl Delay	7.6
HCM 6th LOS	A



Movement	EBL	EBT	EBR	WBL	WBT	WBR	NBL	NBT	NBR	SBL	SBT	SBR
Lane Configurations												
Traffic Volume (veh/h)	3	66	1	31	64	142	2	6	9	221	24	2
Future Volume (veh/h)	3	66	1	31	64	142	2	6	9	221	24	2
Initial Q (Qb), veh	0	0	0	0	0	0	0	0	0	0	0	0
Ped-Bike Adj(A_pbT)	1.00		0.87	1.00		0.92	0.99		0.98	1.00		0.97
Parking Bus, Adj	1.00	1.00	1.00	1.00	1.00	1.00	1.00	1.00	1.00	1.00	1.00	1.00
Work Zone On Approach		No			No			No			No	
Adj Sat Flow, veh/h/ln	1870	1870	1870	1870	1870	1870	1870	1870	1870	1870	1870	1870
Adj Flow Rate, veh/h	3	75	1	33	69	153	4	11	17	246	27	2
Peak Hour Factor	0.88	0.88	0.88	0.93	0.93	0.93	0.53	0.53	0.53	0.90	0.90	0.90
Percent Heavy Veh, %	2	2	2	2	2	2	2	2	2	2	2	2
Cap, veh/h	5	135	2	81	169	198	138	376	540	925	1068	79
Arrive On Green	0.08	0.08	0.08	0.14	0.14	0.14	0.62	0.62	0.62	0.62	0.62	0.62
Sat Flow, veh/h	71	1764	24	595	1245	1455	161	605	868	1376	1715	127
Grp Volume(v), veh/h	79	0	0	102	0	153	32	0	0	246	0	29
Grp Sat Flow(s),veh/h/ln	1858	0	0	1841	0	1455	1634	0	0	1376	0	1842
Q Serve(g_s), s	4.5	0.0	0.0	5.5	0.0	11.1	0.0	0.0	0.0	7.9	0.0	0.7
Cycle Q Clear(g_c), s	4.5	0.0	0.0	5.5	0.0	11.1	0.8	0.0	0.0	8.7	0.0	0.7
Prop In Lane	0.04		0.01	0.32		1.00	0.12		0.53	1.00		0.07
Lane Grp Cap(c), veh/h	142	0	0	250	0	198	1054	0	0	925	0	1147
V/C Ratio(X)	0.56	0.00	0.00	0.41	0.00	0.77	0.03	0.00	0.00	0.27	0.00	0.03
Avail Cap(c_a), veh/h	493	0	0	590	0	466	1054	0	0	925	0	1147
HCM Platoon Ratio	1.00	1.00	1.00	1.00	1.00	1.00	1.00	1.00	1.00	1.00	1.00	1.00
Upstream Filter(I)	1.00	0.00	0.00	1.00	0.00	1.00	1.00	0.00	0.00	1.00	0.00	1.00
Uniform Delay (d), s/veh	48.6	0.0	0.0	43.2	0.0	45.6	7.9	0.0	0.0	9.4	0.0	7.9
Incr Delay (d2), s/veh	1.3	0.0	0.0	0.4	0.0	2.4	0.1	0.0	0.0	0.7	0.0	0.0
Initial Q Delay(d3),s/veh	0.0	0.0	0.0	0.0	0.0	0.0	0.0	0.0	0.0	0.0	0.0	0.0
%ile BackOfQ(50%),veh/ln	2.1	0.0	0.0	2.5	0.0	4.0	0.3	0.0	0.0	2.7	0.0	0.3
Unsig. Movement Delay, s/veh												
LnGrp Delay(d),s/veh	49.9	0.0	0.0	43.6	0.0	48.0	8.0	0.0	0.0	10.1	0.0	7.9
LnGrp LOS	D	A	A	D	A	D	A	A	A	B	A	A
Approach Vol, veh/h		79			255			32			275	
Approach Delay, s/veh		49.9			46.2			8.0			9.9	
Approach LOS		D			D			A			A	

Timer - Assigned Phs	2	4	6	8
Phs Duration (G+Y+Rc), s	74.0	14.4	74.0	20.9
Change Period (Y+Rc), s	6.0	6.0	6.0	6.0
Max Green Setting (Gmax), s	68.0	29.0	68.0	35.0
Max Q Clear Time (g_c+I1), s	2.8	6.5	10.7	13.1
Green Ext Time (p_c), s	0.0	0.2	2.4	0.6

Intersection Summary		
HCM 6th Ctrl Delay	29.2	
HCM 6th LOS	C	



Movement	EBL	EBT	EBR	WBL	WBT	WBR	NBL	NBT	NBR	SBL	SBT	SBR
Lane Configurations												
Traffic Volume (veh/h)	20	37	243	5	23	13	167	970	6	47	1447	47
Future Volume (veh/h)	20	37	243	5	23	13	167	970	6	47	1447	47
Initial Q (Qb), veh	0	0	0	0	0	0	0	0	0	0	0	0
Ped-Bike Adj(A_pbT)	1.00		0.94	1.00		0.96	1.00		0.96	1.00		0.98
Parking Bus, Adj	1.00	1.00	1.00	1.00	1.00	1.00	1.00	1.00	1.00	1.00	1.00	1.00
Work Zone On Approach		No			No			No			No	
Adj Sat Flow, veh/h/ln	1870	1870	1870	1870	1870	1870	1870	1870	1870	1870	1870	1870
Adj Flow Rate, veh/h	21	39	259	6	29	16	180	1043	6	50	1539	50
Peak Hour Factor	0.94	0.94	0.94	0.79	0.79	0.79	0.93	0.93	0.93	0.94	0.94	0.94
Percent Heavy Veh, %	2	2	2	2	2	2	2	2	2	2	2	2
Cap, veh/h	75	370	750	27	319	259	290	1774	10	121	1685	801
Arrive On Green	0.04	0.20	0.20	0.02	0.17	0.17	0.08	0.49	0.49	0.07	0.47	0.47
Sat Flow, veh/h	1781	1870	2614	1781	1870	1519	3456	3622	21	1781	3554	1549
Grp Volume(v), veh/h	21	39	259	6	29	16	180	512	537	50	1539	50
Grp Sat Flow(s),veh/h/ln	1781	1870	1307	1781	1870	1519	1728	1777	1866	1781	1777	1549
Q Serve(g_s), s	1.4	2.0	9.4	0.4	1.6	1.1	6.0	24.5	24.5	3.2	47.8	1.9
Cycle Q Clear(g_c), s	1.4	2.0	9.4	0.4	1.6	1.1	6.0	24.5	24.5	3.2	47.8	1.9
Prop In Lane	1.00		1.00	1.00		1.00	1.00		0.01	1.00		1.00
Lane Grp Cap(c), veh/h	75	370	750	27	319	259	290	871	914	121	1685	801
V/C Ratio(X)	0.28	0.11	0.35	0.22	0.09	0.06	0.62	0.59	0.59	0.41	0.91	0.06
Avail Cap(c_a), veh/h	150	723	1244	150	723	587	290	871	914	150	1693	805
HCM Platoon Ratio	1.00	1.00	1.00	1.00	1.00	1.00	1.00	1.00	1.00	1.00	1.00	1.00
Upstream Filter(I)	1.00	1.00	1.00	1.00	1.00	1.00	1.00	1.00	1.00	1.00	1.00	1.00
Uniform Delay (d), s/veh	55.2	39.1	34.1	57.9	41.6	41.4	52.7	21.7	21.7	53.2	29.0	14.4
Incr Delay (d2), s/veh	0.7	0.3	0.6	1.5	0.3	0.2	3.0	2.9	2.8	0.8	9.1	0.1
Initial Q Delay(d3),s/veh	0.0	0.0	0.0	0.0	0.0	0.0	0.0	0.0	0.0	0.0	0.0	0.0
%ile BackOfQ(50%),veh/ln	0.6	1.0	3.1	0.2	0.7	0.4	2.6	9.9	10.4	1.4	20.3	0.7
Unsig. Movement Delay, s/veh												
LnGrp Delay(d),s/veh	56.0	39.4	34.7	59.4	41.8	41.6	55.7	24.6	24.5	54.0	38.2	14.5
LnGrp LOS	E	D	C	E	D	D	E	C	C	D	D	B
Approach Vol, veh/h		319			51			1229			1639	
Approach Delay, s/veh		36.7			43.8			29.1			37.9	
Approach LOS		D			D			C			D	

Timer - Assigned Phs	1	2	3	4	5	6	7	8
Phs Duration (G+Y+Rc), s	13.8	66.7	7.5	31.0	15.7	64.8	10.7	27.8
Change Period (Y+Rc), s	* 5.7	* 8.4	* 5.7	7.5	* 5.7	* 8.4	* 5.7	7.5
Max Green Setting (Gmax), s	* 10	* 57	* 10	46.0	* 10	* 57	* 10	46.0
Max Q Clear Time (g_c+I1), s	5.2	26.5	2.4	11.4	8.0	49.8	3.4	3.6
Green Ext Time (p_c), s	0.0	19.7	0.0	2.9	0.1	6.6	0.0	0.4

Intersection Summary	
HCM 6th Ctrl Delay	34.6
HCM 6th LOS	C

Notes

* HCM 6th computational engine requires equal clearance times for the phases crossing the barrier.

Intersection	
Int Delay, s/veh	1.8

Movement	EBL	EBR	NBL	NBT	SBT	SBR
Lane Configurations						
Traffic Vol, veh/h	45	19	24	484	666	52
Future Vol, veh/h	45	19	24	484	666	52
Conflicting Peds, #/hr	10	10	10	0	0	10
Sign Control	Stop	Stop	Free	Free	Free	Free
RT Channelized	-	None	-	None	-	None
Storage Length	0	-	410	-	-	80
Veh in Median Storage, #	0	-	-	0	0	-
Grade, %	0	-	-	0	0	-
Peak Hour Factor	92	92	92	92	92	92
Heavy Vehicles, %	2	2	2	2	2	2
Mvmt Flow	49	21	26	526	724	57

Major/Minor	Minor2		Major1		Major2	
Conflicting Flow All	1322	744	791	0	-	0
Stage 1	734	-	-	-	-	-
Stage 2	588	-	-	-	-	-
Critical Hdwy	6.42	6.22	4.12	-	-	-
Critical Hdwy Stg 1	5.42	-	-	-	-	-
Critical Hdwy Stg 2	5.42	-	-	-	-	-
Follow-up Hdwy	3.518	3.318	2.218	-	-	-
Pot Cap-1 Maneuver	173	415	829	-	-	-
Stage 1	475	-	-	-	-	-
Stage 2	555	-	-	-	-	-
Platoon blocked, %				-	-	-
Mov Cap-1 Maneuver	164	407	821	-	-	-
Mov Cap-2 Maneuver	164	-	-	-	-	-
Stage 1	455	-	-	-	-	-
Stage 2	549	-	-	-	-	-

Approach	EB	NB	SB
HCM Control Delay, s	32.5	0.5	0
HCM LOS	D		

Minor Lane/Major Mvmt	NBL	NBT	EBLn1	SBT	SBR
Capacity (veh/h)	821	-	199	-	-
HCM Lane V/C Ratio	0.032	-	0.35	-	-
HCM Control Delay (s)	9.5	-	32.5	-	-
HCM Lane LOS	A	-	D	-	-
HCM 95th %tile Q(veh)	0.1	-	1.5	-	-

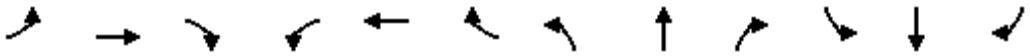

Movement	EBL	EBT	EBR	WBL	WBT	WBR	NBL	NBT	NBR	SBL	SBT	SBR
Lane Configurations												
Traffic Volume (veh/h)	89	31	37	48	38	95	47	249	20	136	296	104
Future Volume (veh/h)	89	31	37	48	38	95	47	249	20	136	296	104
Initial Q (Qb), veh	0	0	0	0	0	0	0	0	0	0	0	0
Ped-Bike Adj(A_pbT)	1.00		0.97	1.00		0.94	1.00		0.97	1.00		0.97
Parking Bus, Adj	1.00	1.00	1.00	1.00	1.00	1.00	1.00	1.00	1.00	1.00	1.00	1.00
Work Zone On Approach		No			No			No			No	
Adj Sat Flow, veh/h/ln	1870	1870	1870	1870	1870	1870	1870	1870	1870	1870	1870	1870
Adj Flow Rate, veh/h	120	42	50	72	57	142	55	293	24	143	312	109
Peak Hour Factor	0.74	0.74	0.74	0.67	0.67	0.67	0.85	0.85	0.85	0.95	0.95	0.95
Percent Heavy Veh, %	2	2	2	2	2	2	2	2	2	2	2	2
Cap, veh/h	259	424	347	215	377	300	203	424	35	245	703	240
Arrive On Green	0.15	0.23	0.23	0.12	0.20	0.20	0.11	0.25	0.25	0.14	0.27	0.27
Sat Flow, veh/h	1781	1870	1530	1781	1870	1486	1781	1700	139	1781	2576	880
Grp Volume(v), veh/h	120	42	50	72	57	142	55	0	317	143	213	208
Grp Sat Flow(s),veh/h/ln	1781	1870	1530	1781	1870	1486	1781	0	1840	1781	1777	1679
Q Serve(g_s), s	4.2	1.2	1.8	2.5	1.7	5.7	1.9	0.0	10.6	5.1	6.7	7.0
Cycle Q Clear(g_c), s	4.2	1.2	1.8	2.5	1.7	5.7	1.9	0.0	10.6	5.1	6.7	7.0
Prop In Lane	1.00		1.00	1.00		1.00	1.00		0.08	1.00		0.52
Lane Grp Cap(c), veh/h	259	424	347	215	377	300	203	0	459	245	485	458
V/C Ratio(X)	0.46	0.10	0.14	0.34	0.15	0.47	0.27	0.00	0.69	0.58	0.44	0.45
Avail Cap(c_a), veh/h	395	967	791	289	856	681	316	0	1033	474	1155	1091
HCM Platoon Ratio	1.00	1.00	1.00	1.00	1.00	1.00	1.00	1.00	1.00	1.00	1.00	1.00
Upstream Filter(I)	1.00	1.00	1.00	1.00	1.00	1.00	1.00	0.00	1.00	1.00	1.00	1.00
Uniform Delay (d), s/veh	26.5	20.7	20.9	27.3	22.3	23.9	27.4	0.0	23.0	27.4	20.3	20.4
Incr Delay (d2), s/veh	0.5	0.1	0.3	0.3	0.3	1.7	0.3	0.0	2.7	0.8	0.9	1.0
Initial Q Delay(d3),s/veh	0.0	0.0	0.0	0.0	0.0	0.0	0.0	0.0	0.0	0.0	0.0	0.0
%ile BackOfQ(50%),veh/ln	1.7	0.5	0.6	1.0	0.7	2.0	0.8	0.0	4.5	2.1	2.7	2.6
Unsig. Movement Delay, s/veh												
LnGrp Delay(d),s/veh	27.0	20.9	21.2	27.6	22.5	25.5	27.7	0.0	25.7	28.2	21.2	21.4
LnGrp LOS	C	C	C	C	C	C	C	A	C	C	C	C
Approach Vol, veh/h		212			271			372			564	
Approach Delay, s/veh		24.4			25.4			26.0			23.1	
Approach LOS		C			C			C			C	

Timer - Assigned Phs	1	2	3	4	5	6	7	8
Phs Duration (G+Y+Rc), s	13.3	22.9	12.2	19.3	11.7	24.5	13.8	17.7
Change Period (Y+Rc), s	4.0	6.0	4.0	4.0	4.0	6.0	4.0	4.0
Max Green Setting (Gmax), s	18.0	38.0	11.0	35.0	12.0	44.0	15.0	31.0
Max Q Clear Time (g_c+I1), s	7.1	12.6	4.5	3.8	3.9	9.0	6.2	7.7
Green Ext Time (p_c), s	0.1	2.6	0.0	0.5	0.0	3.9	0.1	1.2

Intersection Summary	
HCM 6th Ctrl Delay	24.5
HCM 6th LOS	C

Intersection	
Intersection Delay, s/veh	29.7
Intersection LOS	D

Movement	EBL	EBT	EBR	WBL	WBT	WBR	NBL	NBT	NBR	SBL	SBT	SBR
Lane Configurations												
Traffic Vol, veh/h	22	172	210	14	91	178	71	143	16	183	222	15
Future Vol, veh/h	22	172	210	14	91	178	71	143	16	183	222	15
Peak Hour Factor	0.83	0.83	0.83	0.90	0.90	0.90	0.89	0.89	0.89	0.91	0.91	0.91
Heavy Vehicles, %	2	2	2	2	2	2	2	2	2	2	2	2
Mvmt Flow	27	207	253	16	101	198	80	161	18	201	244	16
Number of Lanes	0	1	1	0	1	1	0	1	0	0	1	0

Approach	EB	WB	NB	SB
Opposing Approach	WB	EB	SB	NB
Opposing Lanes	2	2	1	1
Conflicting Approach Left	SB	NB	EB	WB
Conflicting Lanes Left	1	1	2	2
Conflicting Approach Right	NB	SB	WB	EB
Conflicting Lanes Right	1	1	2	2
HCM Control Delay	19	15.7	21.4	55.3
HCM LOS	C	C	C	F

Lane	NBLn1	EBLn1	EBLn2	WBLn1	WBLn2	SBLn1
Vol Left, %	31%	11%	0%	13%	0%	44%
Vol Thru, %	62%	89%	0%	87%	0%	53%
Vol Right, %	7%	0%	100%	0%	100%	4%
Sign Control	Stop	Stop	Stop	Stop	Stop	Stop
Traffic Vol by Lane	230	194	210	105	178	420
LT Vol	71	22	0	14	0	183
Through Vol	143	172	0	91	0	222
RT Vol	16	0	210	0	178	15
Lane Flow Rate	258	234	253	117	198	462
Geometry Grp	2	7	7	7	7	2
Degree of Util (X)	0.574	0.533	0.522	0.278	0.427	0.944
Departure Headway (Hd)	7.997	8.208	7.423	8.569	7.77	7.36
Convergence, Y/N	Yes	Yes	Yes	Yes	Yes	Yes
Cap	450	439	486	419	463	494
Service Time	6.07	5.972	5.186	6.337	5.537	5.416
HCM Lane V/C Ratio	0.573	0.533	0.521	0.279	0.428	0.935
HCM Control Delay	21.4	20	18.1	14.6	16.3	55.3
HCM Lane LOS	C	C	C	B	C	F
HCM 95th-tile Q	3.5	3.1	3	1.1	2.1	11.5

Intersection	
Int Delay, s/veh	1

Movement	EBL	EBT	EBR	WBL	WBT	WBR	NBL	NBT	NBR	SBL	SBT	SBR
Lane Configurations		⇕			⇕			⇕			⇕	
Traffic Vol, veh/h	3	292	14	5	231	1	5	2	1	2	2	2
Future Vol, veh/h	3	292	14	5	231	1	5	2	1	2	2	2
Conflicting Peds, #/hr	10	0	10	10	0	10	10	0	10	10	0	10
Sign Control	Free	Free	Free	Free	Free	Free	Stop	Stop	Stop	Stop	Stop	Stop
RT Channelized	-	-	None	-	-	None	-	-	None	-	-	None
Storage Length	-	-	-	-	-	-	-	-	-	-	-	-
Veh in Median Storage, #	-	0	-	-	0	-	-	0	-	-	0	-
Grade, %	-	0	-	-	0	-	-	0	-	-	0	-
Peak Hour Factor	85	85	85	87	87	87	50	50	50	25	25	25
Heavy Vehicles, %	2	2	2	2	2	2	2	2	2	2	2	2
Mvmt Flow	4	344	16	6	266	1	10	4	2	8	8	8

Major/Minor	Major1			Major2			Minor1			Minor2		
Conflicting Flow All	277	0	0	370	0	0	667	659	372	662	667	287
Stage 1	-	-	-	-	-	-	370	370	-	289	289	-
Stage 2	-	-	-	-	-	-	297	289	-	373	378	-
Critical Hdwy	4.12	-	-	4.12	-	-	7.12	6.52	6.22	7.12	6.52	6.22
Critical Hdwy Stg 1	-	-	-	-	-	-	6.12	5.52	-	6.12	5.52	-
Critical Hdwy Stg 2	-	-	-	-	-	-	6.12	5.52	-	6.12	5.52	-
Follow-up Hdwy	2.218	-	-	2.218	-	-	3.518	4.018	3.318	3.518	4.018	3.318
Pot Cap-1 Maneuver	1286	-	-	1189	-	-	372	384	674	375	380	752
Stage 1	-	-	-	-	-	-	650	620	-	719	673	-
Stage 2	-	-	-	-	-	-	712	673	-	648	615	-
Platoon blocked, %		-	-		-	-						
Mov Cap-1 Maneuver	1274	-	-	1178	-	-	352	372	661	361	369	738
Mov Cap-2 Maneuver	-	-	-	-	-	-	352	372	-	361	369	-
Stage 1	-	-	-	-	-	-	642	611	-	710	662	-
Stage 2	-	-	-	-	-	-	685	662	-	633	606	-

Approach	EB	WB	NB	SB
HCM Control Delay, s	0.1	0.2	14.9	13.7
HCM LOS			B	B

Minor Lane/Major Mvmt	NBLn1	EBL	EBT	EBR	WBL	WBT	WBR	SBLn1
Capacity (veh/h)	379	1274	-	-	1178	-	-	439
HCM Lane V/C Ratio	0.042	0.003	-	-	0.005	-	-	0.055
HCM Control Delay (s)	14.9	7.8	0	-	8.1	0	-	13.7
HCM Lane LOS	B	A	A	-	A	A	-	B
HCM 95th %tile Q(veh)	0.1	0	-	-	0	-	-	0.2

APPENDIX D

YEAR 2027 WITHOUT PROJECT INTERSECTION ANALYSIS WORKSHEETS

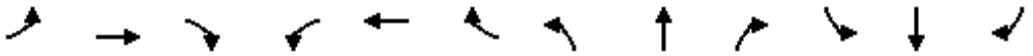

Movement	EBL	EBT	EBR	WBL	WBT	WBR	NBL	NBT	NBR	SBL	SBT	SBR
Lane Configurations												
Traffic Volume (veh/h)	104	220	192	90	229	59	126	752	82	89	532	96
Future Volume (veh/h)	104	220	192	90	229	59	126	752	82	89	532	96
Initial Q (Qb), veh	0	0	0	0	0	0	0	0	0	0	0	0
Ped-Bike Adj(A_pbT)	1.00		0.97	1.00		0.97	1.00		0.96	1.00		0.96
Parking Bus, Adj	1.00	1.00	1.00	1.00	1.00	1.00	1.00	1.00	1.00	1.00	1.00	1.00
Work Zone On Approach		No			No			No			No	
Adj Sat Flow, veh/h/ln	1870	1870	1870	1870	1870	1870	1870	1870	1870	1870	1870	1870
Adj Flow Rate, veh/h	146	310	270	141	358	92	162	964	105	131	782	141
Peak Hour Factor	0.71	0.71	0.71	0.64	0.64	0.64	0.78	0.78	0.78	0.68	0.68	0.68
Percent Heavy Veh, %	2	2	2	2	2	2	2	2	2	2	2	2
Cap, veh/h	172	424	347	167	419	343	188	1307	142	157	1159	209
Arrive On Green	0.10	0.23	0.23	0.09	0.22	0.22	0.11	0.41	0.41	0.09	0.39	0.39
Sat Flow, veh/h	1781	1870	1530	1781	1870	1530	1781	3216	350	1781	2984	538
Grp Volume(v), veh/h	146	310	270	141	358	92	162	532	537	131	466	457
Grp Sat Flow(s),veh/h/ln	1781	1870	1530	1781	1870	1530	1781	1777	1790	1781	1777	1746
Q Serve(g_s), s	9.8	18.7	20.2	9.5	22.4	6.1	10.9	31.0	31.0	8.8	26.5	26.5
Cycle Q Clear(g_c), s	9.8	18.7	20.2	9.5	22.4	6.1	10.9	31.0	31.0	8.8	26.5	26.5
Prop In Lane	1.00		1.00	1.00		1.00	1.00		0.20	1.00		0.31
Lane Grp Cap(c), veh/h	172	424	347	167	419	343	188	722	727	157	690	678
V/C Ratio(X)	0.85	0.73	0.78	0.84	0.85	0.27	0.86	0.74	0.74	0.84	0.67	0.67
Avail Cap(c_a), veh/h	201	497	406	197	492	403	216	722	727	181	690	678
HCM Platoon Ratio	1.00	1.00	1.00	1.00	1.00	1.00	1.00	1.00	1.00	1.00	1.00	1.00
Upstream Filter(I)	1.00	1.00	1.00	0.61	0.61	0.61	0.63	0.63	0.63	1.00	1.00	1.00
Uniform Delay (d), s/veh	54.2	43.7	44.3	54.4	45.4	39.1	53.7	30.7	30.7	54.8	30.9	30.9
Incr Delay (d2), s/veh	21.8	3.5	6.5	14.1	7.0	0.1	15.9	4.3	4.2	22.2	5.2	5.3
Initial Q Delay(d3),s/veh	0.0	0.0	0.0	0.0	0.0	0.0	0.0	0.0	0.0	0.0	0.0	0.0
%ile BackOfQ(50%),veh/ln	5.4	9.0	8.2	4.9	11.1	2.3	5.7	14.0	14.1	4.9	12.3	12.1
Unsig. Movement Delay, s/veh												
LnGrp Delay(d),s/veh	76.1	47.2	50.8	68.5	52.4	39.2	69.6	35.0	34.9	76.9	36.1	36.2
LnGrp LOS	E	D	D	E	D	D	E	C	C	E	D	D
Approach Vol, veh/h		726			591			1231			1054	
Approach Delay, s/veh		54.3			54.2			39.5			41.2	
Approach LOS		D			D			D			D	

Timer - Assigned Phs	1	2	3	4	5	6	7	8
Phs Duration (G+Y+Rc), s	16.3	55.3	17.0	33.4	18.5	53.1	17.4	33.0
Change Period (Y+Rc), s	5.6	5.7	5.6	5.7	5.6	5.7	5.6	5.7
Max Green Setting (Gmax), s	12.4	41.1	13.5	32.4	14.8	38.7	13.8	32.1
Max Q Clear Time (g_c+I1), s	10.8	33.0	11.5	22.2	12.9	28.5	11.8	24.4
Green Ext Time (p_c), s	0.0	3.1	0.0	1.3	0.0	3.1	0.0	1.0

Intersection Summary	
HCM 6th Ctrl Delay	45.4
HCM 6th LOS	D



Movement	EBL	EBT	EBR	WBL	WBT	WBR	NBL	NBT	NBR	SBL	SBT	SBR
Lane Configurations												
Traffic Volume (veh/h)	75	241	80	19	248	17	129	580	26	65	378	86
Future Volume (veh/h)	75	241	80	19	248	17	129	580	26	65	378	86
Initial Q (Qb), veh	0	0	0	0	0	0	0	0	0	0	0	0
Ped-Bike Adj(A_pbT)	1.00		0.98	0.99		0.97	1.00		0.95	1.00		0.95
Parking Bus, Adj	1.00	1.00	1.00	1.00	1.00	1.00	1.00	1.00	1.00	1.00	1.00	1.00
Work Zone On Approach		No			No			No			No	
Adj Sat Flow, veh/h/ln	1870	1870	1870	1870	1870	1870	1870	1870	1870	1870	1870	1870
Adj Flow Rate, veh/h	110	354	118	27	354	24	172	773	35	97	564	128
Peak Hour Factor	0.68	0.68	0.68	0.70	0.70	0.70	0.75	0.75	0.75	0.67	0.67	0.67
Percent Heavy Veh, %	2	2	2	2	2	2	2	2	2	2	2	2
Cap, veh/h	212	589	196	68	442	29	215	1102	50	126	765	173
Arrive On Green	0.12	0.44	0.44	0.27	0.27	0.27	0.12	0.32	0.32	0.07	0.27	0.27
Sat Flow, veh/h	1781	1333	444	63	1613	106	1781	3454	156	1781	2847	643
Grp Volume(v), veh/h	110	0	472	405	0	0	172	398	410	97	351	341
Grp Sat Flow(s),veh/h/ln	1781	0	1778	1782	0	0	1781	1777	1833	1781	1777	1713
Q Serve(g_s), s	4.4	0.0	15.2	6.6	0.0	0.0	7.1	14.8	14.8	4.0	13.6	13.7
Cycle Q Clear(g_c), s	4.4	0.0	15.2	16.0	0.0	0.0	7.1	14.8	14.8	4.0	13.6	13.7
Prop In Lane	1.00		0.25	0.07		0.06	1.00		0.09	1.00		0.38
Lane Grp Cap(c), veh/h	212	0	786	539	0	0	215	567	585	126	478	461
V/C Ratio(X)	0.52	0.00	0.60	0.75	0.00	0.00	0.80	0.70	0.70	0.77	0.73	0.74
Avail Cap(c_a), veh/h	314	0	1306	946	0	0	431	919	949	299	788	759
HCM Platoon Ratio	1.00	1.00	1.00	1.00	1.00	1.00	1.00	1.00	1.00	1.00	1.00	1.00
Upstream Filter(I)	1.00	0.00	1.00	1.00	0.00	0.00	1.00	1.00	1.00	1.00	1.00	1.00
Uniform Delay (d), s/veh	31.2	0.0	16.0	25.6	0.0	0.0	32.3	22.6	22.6	34.5	25.2	25.2
Incr Delay (d2), s/veh	2.0	0.0	0.7	2.1	0.0	0.0	6.7	1.6	1.5	9.5	2.2	2.4
Initial Q Delay(d3),s/veh	0.0	0.0	0.0	0.0	0.0	0.0	0.0	0.0	0.0	0.0	0.0	0.0
%ile BackOfQ(50%),veh/ln	1.9	0.0	5.7	6.6	0.0	0.0	3.4	6.1	6.3	2.0	5.7	5.6
Unsig. Movement Delay, s/veh												
LnGrp Delay(d),s/veh	33.2	0.0	16.8	27.7	0.0	0.0	39.0	24.2	24.1	44.0	27.4	27.6
LnGrp LOS	C	A	B	C	A	A	D	C	C	D	C	C
Approach Vol, veh/h		582			405			980			789	
Approach Delay, s/veh		19.9			27.7			26.7			29.5	
Approach LOS		B			C			C			C	

Timer - Assigned Phs	1	2		4	5	6	7	8
Phs Duration (G+Y+Rc), s	9.0	28.6		37.9	12.8	24.8	12.7	25.2
Change Period (Y+Rc), s	3.7	4.5		4.5	3.7	4.5	3.7	4.5
Max Green Setting (Gmax), s	12.3	39.1		55.5	18.3	33.5	13.3	38.5
Max Q Clear Time (g_c+I1), s	6.0	16.8		17.2	9.1	15.7	6.4	18.0
Green Ext Time (p_c), s	0.1	5.3		3.3	0.3	4.2	0.1	2.4

Intersection Summary	
HCM 6th Ctrl Delay	26.2
HCM 6th LOS	C



Movement	EBL	EBT	EBR	WBL	WBT	WBR	NBL	NBT	NBR	SBL	SBT	SBR
Lane Configurations												
Traffic Volume (veh/h)	42	182	66	80	130	190	35	570	87	112	451	15
Future Volume (veh/h)	42	182	66	80	130	190	35	570	87	112	451	15
Initial Q (Qb), veh	0	0	0	0	0	0	0	0	0	0	0	0
Ped-Bike Adj(A_pbT)	1.00		0.97	1.00		0.96	1.00		0.95	1.00		0.95
Parking Bus, Adj	1.00	1.00	1.00	1.00	1.00	1.00	1.00	1.00	1.00	1.00	1.00	1.00
Work Zone On Approach		No			No			No			No	
Adj Sat Flow, veh/h/ln	1870	1870	1870	1870	1870	1870	1870	1870	1870	1870	1870	1870
Adj Flow Rate, veh/h	54	233	85	98	159	232	40	648	99	135	543	18
Peak Hour Factor	0.78	0.78	0.78	0.82	0.82	0.82	0.88	0.88	0.88	0.83	0.83	0.83
Percent Heavy Veh, %	2	2	2	2	2	2	2	2	2	2	2	2
Cap, veh/h	63	270	98	139	225	303	65	840	128	161	1149	38
Arrive On Green	0.24	0.24	0.24	0.20	0.20	0.20	0.04	0.27	0.27	0.09	0.33	0.33
Sat Flow, veh/h	257	1108	404	700	1135	1525	1781	3066	467	1781	3504	116
Grp Volume(v), veh/h	372	0	0	257	0	232	40	375	372	135	275	286
Grp Sat Flow(s),veh/h/ln	1769	0	0	1835	0	1525	1781	1777	1756	1781	1777	1843
Q Serve(g_s), s	24.3	0.0	0.0	15.7	0.0	17.3	2.7	23.4	23.5	9.0	14.8	14.9
Cycle Q Clear(g_c), s	24.3	0.0	0.0	15.7	0.0	17.3	2.7	23.4	23.5	9.0	14.8	14.9
Prop In Lane	0.15		0.23	0.38		1.00	1.00		0.27	1.00		0.06
Lane Grp Cap(c), veh/h	431	0	0	364	0	303	65	487	482	161	583	605
V/C Ratio(X)	0.86	0.00	0.00	0.71	0.00	0.77	0.61	0.77	0.77	0.84	0.47	0.47
Avail Cap(c_a), veh/h	543	0	0	564	0	468	132	552	545	226	646	670
HCM Platoon Ratio	1.00	1.00	1.00	1.00	1.00	1.00	1.00	1.00	1.00	1.00	1.00	1.00
Upstream Filter(I)	1.00	0.00	0.00	1.00	0.00	1.00	1.00	1.00	1.00	1.00	1.00	1.00
Uniform Delay (d), s/veh	43.7	0.0	0.0	45.0	0.0	45.7	57.2	40.2	40.3	53.9	32.2	32.2
Incr Delay (d2), s/veh	11.3	0.0	0.0	2.5	0.0	4.1	3.4	9.8	10.0	12.5	2.1	2.1
Initial Q Delay(d3),s/veh	0.0	0.0	0.0	0.0	0.0	0.0	0.0	0.0	0.0	0.0	0.0	0.0
%ile BackOfQ(50%),veh/ln	11.8	0.0	0.0	7.3	0.0	6.8	1.2	11.3	11.2	4.5	6.6	6.8
Unsig. Movement Delay, s/veh												
LnGrp Delay(d),s/veh	55.0	0.0	0.0	47.5	0.0	49.7	60.6	50.0	50.3	66.4	34.3	34.3
LnGrp LOS	D	A	A	D	A	D	E	D	D	E	C	C
Approach Vol, veh/h		372			489			787			696	
Approach Delay, s/veh		55.0			48.6			50.7			40.5	
Approach LOS		D			D			D			D	

Timer - Assigned Phs	1	2		4	5	6		8
Phs Duration (G+Y+Rc), s	10.1	44.9		30.0	16.6	38.4		35.4
Change Period (Y+Rc), s	* 5.7	5.4		6.1	* 5.7	5.4		6.1
Max Green Setting (Gmax), s	* 8.3	43.8		37.0	* 15	37.4		37.0
Max Q Clear Time (g_c+I1), s	14.7	16.9		19.3	11.0	25.5		26.3
Green Ext Time (p_c), s	0.0	8.2		2.1	0.1	6.7		1.6

Intersection Summary	
HCM 6th Ctrl Delay	47.9
HCM 6th LOS	D

Notes

* HCM 6th computational engine requires equal clearance times for the phases crossing the barrier.



Movement	EBL	EBT	EBR	WBL	WBT	WBR	NBL	NBT	NBR	SBL	SBT	SBR
Lane Configurations												
Traffic Volume (veh/h)	60	85	87	34	133	53	115	393	64	26	323	56
Future Volume (veh/h)	60	85	87	34	133	53	115	393	64	26	323	56
Initial Q (Qb), veh	0	0	0	0	0	0	0	0	0	0	0	0
Ped-Bike Adj(A_pbT)	1.00		0.91	1.00		0.94	1.00		0.95	1.00		0.95
Parking Bus, Adj	1.00	1.00	1.00	1.00	1.00	1.00	1.00	1.00	1.00	1.00	1.00	1.00
Work Zone On Approach		No			No			No			No	
Adj Sat Flow, veh/h/ln	1870	1870	1870	1870	1870	1870	1870	1870	1870	1870	1870	1870
Adj Flow Rate, veh/h	69	98	100	41	160	64	135	462	75	34	419	73
Peak Hour Factor	0.87	0.87	0.87	0.83	0.83	0.83	0.85	0.85	0.85	0.77	0.77	0.77
Percent Heavy Veh, %	2	2	2	2	2	2	2	2	2	2	2	2
Cap, veh/h	92	130	175	53	208	83	170	521	85	60	511	411
Arrive On Green	0.12	0.12	0.12	0.20	0.20	0.20	0.10	0.33	0.33	0.03	0.27	0.27
Sat Flow, veh/h	757	1075	1443	270	1055	422	1781	1558	253	1781	1870	1504
Grp Volume(v), veh/h	167	0	100	265	0	0	135	0	537	34	419	73
Grp Sat Flow(s),veh/h/ln	1833	0	1443	1747	0	0	1781	0	1811	1781	1870	1504
Q Serve(g_s), s	6.5	0.0	4.9	10.6	0.0	0.0	5.5	0.0	20.8	1.4	15.6	2.8
Cycle Q Clear(g_c), s	6.5	0.0	4.9	10.6	0.0	0.0	5.5	0.0	20.8	1.4	15.6	2.8
Prop In Lane	0.41		1.00	0.15		0.24	1.00		0.14	1.00		1.00
Lane Grp Cap(c), veh/h	222	0	175	345	0	0	170	0	606	60	511	411
V/C Ratio(X)	0.75	0.00	0.57	0.77	0.00	0.00	0.80	0.00	0.89	0.56	0.82	0.18
Avail Cap(c_a), veh/h	422	0	332	615	0	0	346	0	1176	130	988	794
HCM Platoon Ratio	1.00	1.00	1.00	1.00	1.00	1.00	1.00	1.00	1.00	1.00	1.00	1.00
Upstream Filter(I)	1.00	0.00	1.00	1.00	0.00	0.00	1.00	0.00	1.00	1.00	1.00	1.00
Uniform Delay (d), s/veh	31.5	0.0	30.8	28.2	0.0	0.0	32.9	0.0	23.3	35.3	25.2	20.6
Incr Delay (d2), s/veh	1.9	0.0	1.1	1.4	0.0	0.0	3.2	0.0	1.8	3.0	1.3	0.1
Initial Q Delay(d3),s/veh	0.0	0.0	0.0	0.0	0.0	0.0	0.0	0.0	0.0	0.0	0.0	0.0
%ile BackOfQ(50%),veh/ln	2.9	0.0	1.7	4.3	0.0	0.0	2.4	0.0	8.0	0.6	6.3	0.9
Unsig. Movement Delay, s/veh												
LnGrp Delay(d),s/veh	33.5	0.0	31.9	29.5	0.0	0.0	36.1	0.0	25.1	38.3	26.5	20.7
LnGrp LOS	C	A	C	C	A	A	D	A	C	D	C	C
Approach Vol, veh/h		267			265			672			526	
Approach Delay, s/veh		32.9			29.5			27.3			26.5	
Approach LOS		C			C			C			C	

Timer - Assigned Phs	1	2		4	5	6		8
Phs Duration (G+Y+Rc), s	8.1	30.6		14.9	12.7	26.1		20.6
Change Period (Y+Rc), s	5.6	5.8		5.9	5.6	5.8		5.9
Max Green Setting (Gmax), s	5.4	48.2		17.1	14.4	39.2		26.1
Max Q Clear Time (g_c+I1), s	3.4	22.8		8.5	7.5	17.6		12.6
Green Ext Time (p_c), s	0.0	2.0		0.5	0.0	1.5		0.8

Intersection Summary		
HCM 6th Ctrl Delay		28.3
HCM 6th LOS		C

Intersection	
Intersection Delay, s/veh	87.4
Intersection LOS	F

Movement	EBL	EBT	EBR	WBL	WBT	WBR	NBL	NBT	NBR	SBL	SBT	SBR
Lane Configurations												
Traffic Vol, veh/h	53	153	82	44	115	86	107	562	65	80	349	30
Future Vol, veh/h	53	153	82	44	115	86	107	562	65	80	349	30
Peak Hour Factor	0.73	0.73	0.73	0.74	0.74	0.74	0.78	0.78	0.78	0.66	0.66	0.66
Heavy Vehicles, %	2	2	2	2	2	2	2	2	2	2	2	2
Mvmt Flow	73	210	112	59	155	116	137	721	83	121	529	45
Number of Lanes	0	1	0	0	1	0	1	2	0	1	2	0

Approach	EB	WB	NB	SB
Opposing Approach	WB	EB	SB	NB
Opposing Lanes	1	1	3	3
Conflicting Approach Left	SB	NB	EB	WB
Conflicting Lanes Left	3	3	1	1
Conflicting Approach Right	NB	SB	WB	EB
Conflicting Lanes Right	3	3	1	1
HCM Control Delay	116.1	69.1	111.9	46.8
HCM LOS	F	F	F	E

Lane	NBLn1	NBLn2	NBLn3	EBLn1	WBLn1	SBLn1	SBLn2	SBLn3
Vol Left, %	100%	0%	0%	18%	18%	100%	0%	0%
Vol Thru, %	0%	100%	74%	53%	47%	0%	100%	79%
Vol Right, %	0%	0%	26%	28%	35%	0%	0%	21%
Sign Control	Stop	Stop	Stop	Stop	Stop	Stop	Stop	Stop
Traffic Vol by Lane	107	375	252	288	245	80	233	146
LT Vol	107	0	0	53	44	80	0	0
Through Vol	0	375	187	153	115	0	233	116
RT Vol	0	0	65	82	86	0	0	30
Lane Flow Rate	137	480	324	395	331	121	353	222
Geometry Grp	7	7	7	7	7	7	7	7
Degree of Util (X)	0.385	1.292	0.853	1.113	0.938	0.344	0.949	0.588
Departure Headway (Hd)	10.757	10.221	10.028	10.656	10.952	10.907	10.37	10.216
Convergence, Y/N	Yes	Yes	Yes	Yes	Yes	Yes	Yes	Yes
Cap	336	360	362	343	334	332	353	355
Service Time	8.457	7.921	7.728	8.356	8.652	8.607	8.07	7.916
HCM Lane V/C Ratio	0.408	1.333	0.895	1.152	0.991	0.364	1	0.625
HCM Control Delay	20	179.9	50	116.1	69.1	19.2	69.1	26.5
HCM Lane LOS	C	F	E	F	F	C	F	D
HCM 95th-tile Q	1.8	21	7.9	14.5	9.6	1.5	10.1	3.6



Movement	EBL	EBT	EBR	WBL	WBT	WBR	NBL	NBT	NBR	SBL	SBT	SBR
Lane Configurations												
Traffic Volume (veh/h)	103	79	146	59	82	19	67	568	28	12	500	33
Future Volume (veh/h)	103	79	146	59	82	19	67	568	28	12	500	33
Initial Q (Qb), veh	0	0	0	0	0	0	0	0	0	0	0	0
Ped-Bike Adj(A_pbT)	1.00		0.96	1.00		0.96	1.00		0.96	1.00		0.95
Parking Bus, Adj	1.00	1.00	1.00	1.00	1.00	1.00	1.00	1.00	1.00	1.00	1.00	1.00
Work Zone On Approach		No			No			No			No	
Adj Sat Flow, veh/h/ln	1870	1870	1870	1870	1870	1870	1870	1870	1870	1870	1870	1870
Adj Flow Rate, veh/h	126	96	178	92	128	30	80	676	33	14	602	40
Peak Hour Factor	0.82	0.82	0.82	0.64	0.64	0.64	0.84	0.84	0.84	0.83	0.83	0.83
Percent Heavy Veh, %	2	2	2	2	2	2	2	2	2	2	2	2
Cap, veh/h	171	130	251	126	176	41	136	1215	59	48	1025	68
Arrive On Green	0.17	0.17	0.17	0.19	0.19	0.19	0.08	0.35	0.35	0.03	0.30	0.30
Sat Flow, veh/h	1032	786	1517	658	916	215	1781	3440	168	1781	3370	224
Grp Volume(v), veh/h	222	0	178	250	0	0	80	349	360	14	317	325
Grp Sat Flow(s),veh/h/ln	1819	0	1517	1789	0	0	1781	1777	1831	1781	1777	1817
Q Serve(g_s), s	8.6	0.0	8.2	9.8	0.0	0.0	3.2	11.7	11.8	0.6	11.2	11.3
Cycle Q Clear(g_c), s	8.6	0.0	8.2	9.8	0.0	0.0	3.2	11.7	11.8	0.6	11.2	11.3
Prop In Lane	0.57		1.00	0.37		0.12	1.00		0.09	1.00		0.12
Lane Grp Cap(c), veh/h	301	0	251	343	0	0	136	627	647	48	540	552
V/C Ratio(X)	0.74	0.00	0.71	0.73	0.00	0.00	0.59	0.56	0.56	0.29	0.59	0.59
Avail Cap(c_a), veh/h	619	0	517	681	0	0	295	923	951	199	827	846
HCM Platoon Ratio	1.00	1.00	1.00	1.00	1.00	1.00	1.00	1.00	1.00	1.00	1.00	1.00
Upstream Filter(I)	1.00	0.00	1.00	1.00	0.00	0.00	1.00	1.00	1.00	1.00	1.00	1.00
Uniform Delay (d), s/veh	29.5	0.0	29.3	28.2	0.0	0.0	33.2	19.3	19.4	35.5	21.9	21.9
Incr Delay (d2), s/veh	3.5	0.0	3.7	3.0	0.0	0.0	1.5	2.8	2.7	1.2	3.6	3.6
Initial Q Delay(d3),s/veh	0.0	0.0	0.0	0.0	0.0	0.0	0.0	0.0	0.0	0.0	0.0	0.0
%ile BackOfQ(50%),veh/ln	3.9	0.0	3.1	4.3	0.0	0.0	1.4	4.8	5.0	0.3	4.8	4.9
Unsig. Movement Delay, s/veh												
LnGrp Delay(d),s/veh	33.0	0.0	33.0	31.2	0.0	0.0	34.7	22.1	22.1	36.7	25.6	25.5
LnGrp LOS	C	A	C	C	A	A	C	C	C	D	C	C
Approach Vol, veh/h		400			250			789			656	
Approach Delay, s/veh		33.0			31.2			23.4			25.8	
Approach LOS		C			C			C			C	

Timer - Assigned Phs	1	2		4	5	6		8
Phs Duration (G+Y+Rc), s	10.4	28.0		19.0	6.7	31.6		17.0
Change Period (Y+Rc), s	* 4.7	5.4		* 4.7	* 4.7	5.4		4.7
Max Green Setting (Gmax), s	* 13	34.6		* 28	* 8.3	38.6		25.3
Max Q Clear Time (g_c+I1), s	5.2	13.3		11.8	2.6	13.8		10.6
Green Ext Time (p_c), s	0.0	8.5		1.3	0.0	10.3		1.7

Intersection Summary	
HCM 6th Ctrl Delay	26.9
HCM 6th LOS	C

Notes

* HCM 6th computational engine requires equal clearance times for the phases crossing the barrier.



Movement	EBL	EBT	EBR	WBL	WBT	WBR	NBL	NBT	NBR	SBL	SBT	SBR
Lane Configurations												
Traffic Volume (veh/h)	164	120	322	45	112	55	239	743	47	29	475	94
Future Volume (veh/h)	164	120	322	45	112	55	239	743	47	29	475	94
Initial Q (Qb), veh	0	0	0	0	0	0	0	0	0	0	0	0
Ped-Bike Adj(A_pbT)	1.00		0.98	0.99		0.96	1.00		0.96	1.00		0.97
Parking Bus, Adj	1.00	1.00	1.00	1.00	1.00	1.00	1.00	1.00	1.00	1.00	1.00	1.00
Work Zone On Approach		No			No			No			No	
Adj Sat Flow, veh/h/ln	1870	1870	1870	1870	1870	1870	1870	1870	1870	1870	1870	1870
Adj Flow Rate, veh/h	228	167	447	53	132	65	319	991	63	40	660	131
Peak Hour Factor	0.72	0.72	0.72	0.85	0.85	0.85	0.75	0.75	0.75	0.72	0.72	0.72
Percent Heavy Veh, %	2	2	2	2	2	2	2	2	2	2	2	2
Cap, veh/h	240	749	619	89	186	83	333	1378	88	57	743	147
Arrive On Green	0.13	0.40	0.40	0.21	0.21	0.21	0.19	0.41	0.41	0.03	0.25	0.25
Sat Flow, veh/h	1781	1870	1546	228	867	385	1781	3383	215	1781	2937	582
Grp Volume(v), veh/h	228	167	447	250	0	0	319	521	533	40	399	392
Grp Sat Flow(s),veh/h/ln	1781	1870	1546	1481	0	0	1781	1777	1821	1781	1777	1743
Q Serve(g_s), s	13.9	6.4	26.7	11.6	0.0	0.0	19.4	26.8	26.8	2.4	23.6	23.7
Cycle Q Clear(g_c), s	13.9	6.4	26.7	17.0	0.0	0.0	19.4	26.8	26.8	2.4	23.6	23.7
Prop In Lane	1.00		1.00	0.21		0.26	1.00		0.12	1.00		0.33
Lane Grp Cap(c), veh/h	240	749	619	357	0	0	333	724	742	57	449	441
V/C Ratio(X)	0.95	0.22	0.72	0.70	0.00	0.00	0.96	0.72	0.72	0.70	0.89	0.89
Avail Cap(c_a), veh/h	240	913	754	480	0	0	333	724	742	83	468	459
HCM Platoon Ratio	1.00	1.00	1.00	1.00	1.00	1.00	1.00	1.00	1.00	1.00	1.00	1.00
Upstream Filter(I)	1.00	1.00	1.00	1.00	0.00	0.00	1.00	1.00	1.00	1.00	1.00	1.00
Uniform Delay (d), s/veh	46.9	21.6	27.6	40.0	0.0	0.0	44.0	27.1	27.1	52.3	39.3	39.3
Incr Delay (d2), s/veh	44.2	0.1	1.9	1.4	0.0	0.0	38.4	3.8	3.7	5.6	18.5	19.0
Initial Q Delay(d3),s/veh	0.0	0.0	0.0	0.0	0.0	0.0	0.0	0.0	0.0	0.0	0.0	0.0
%ile BackOfQ(50%),veh/ln	9.1	2.8	9.9	6.4	0.0	0.0	12.0	11.9	12.2	1.2	12.5	12.4
Unsig. Movement Delay, s/veh												
LnGrp Delay(d),s/veh	91.1	21.6	29.5	41.3	0.0	0.0	82.4	30.9	30.8	57.9	57.8	58.4
LnGrp LOS	F	C	C	D	A	A	F	C	C	E	E	E
Approach Vol, veh/h		842			250			1373			831	
Approach Delay, s/veh		44.6			41.3			42.8			58.1	
Approach LOS		D			D			D			E	

Timer - Assigned Phs	1	2		4	5	6	7	8
Phs Duration (G+Y+Rc), s	9.1	50.2		49.9	26.0	33.3	20.3	29.6
Change Period (Y+Rc), s	5.6	5.7		6.2	5.6	5.7	5.6	6.2
Max Green Setting (Gmax), s	5.1	44.1		53.3	20.4	28.8	14.7	33.0
Max Q Clear Time (g_c+I1), s	4.4	28.8		28.7	21.4	25.7	15.9	19.0
Green Ext Time (p_c), s	0.0	8.1		1.5	0.0	1.8	0.0	1.0

Intersection Summary		
HCM 6th Ctrl Delay	47.0	
HCM 6th LOS	D	



Movement	EBL	EBT	EBR	WBL	WBT	WBR	NBL	NBT	NBR	SBL	SBT	SBR
Lane Configurations												
Traffic Volume (veh/h)	0	0	0	216	1	310	146	519	0	0	716	97
Future Volume (veh/h)	0	0	0	216	1	310	146	519	0	0	716	97
Initial Q (Qb), veh				0	0	0	0	0	0	0	0	0
Ped-Bike Adj(A_pbT)				1.00		0.97	1.00		1.00	1.00		0.96
Parking Bus, Adj				1.00	1.00	1.00	1.00	1.00	1.00	1.00	1.00	1.00
Work Zone On Approach					No			No			No	
Adj Sat Flow, veh/h/ln				1870	1870	1870	1870	1870	0	0	1870	1870
Adj Flow Rate, veh/h				277	1	397	155	552	0	0	833	113
Peak Hour Factor				0.78	0.78	0.78	0.94	0.94	0.94	0.86	0.86	0.86
Percent Heavy Veh, %				2	2	2	2	2	0	0	2	2
Cap, veh/h				553	2	480	191	2016	0	0	1269	172
Arrive On Green				0.31	0.31	0.31	0.11	0.57	0.00	0.00	0.41	0.41
Sat Flow, veh/h				1775	6	1540	1781	3647	0	0	3219	424
Grp Volume(v), veh/h				278	0	397	155	552	0	0	474	472
Grp Sat Flow(s),veh/h/ln				1782	0	1540	1781	1777	0	0	1777	1773
Q Serve(g_s), s				11.0	0.0	20.7	7.4	6.9	0.0	0.0	18.7	18.7
Cycle Q Clear(g_c), s				11.0	0.0	20.7	7.4	6.9	0.0	0.0	18.7	18.7
Prop In Lane				1.00		1.00	1.00		0.00	0.00		0.24
Lane Grp Cap(c), veh/h				555	0	480	191	2016	0	0	721	719
V/C Ratio(X)				0.50	0.00	0.83	0.81	0.27	0.00	0.00	0.66	0.66
Avail Cap(c_a), veh/h				800	0	691	397	2896	0	0	956	953
HCM Platoon Ratio				1.00	1.00	1.00	1.00	1.00	1.00	1.00	1.00	1.00
Upstream Filter(I)				1.00	0.00	1.00	1.00	1.00	0.00	0.00	1.00	1.00
Uniform Delay (d), s/veh				24.3	0.0	27.7	37.8	9.6	0.0	0.0	20.8	20.8
Incr Delay (d2), s/veh				0.7	0.0	5.6	3.2	0.3	0.0	0.0	3.7	3.7
Initial Q Delay(d3),s/veh				0.0	0.0	0.0	0.0	0.0	0.0	0.0	0.0	0.0
%ile BackOfQ(50%),veh/ln				4.6	0.0	8.1	3.2	2.4	0.0	0.0	7.8	7.8
Unsig. Movement Delay, s/veh												
LnGrp Delay(d),s/veh				25.0	0.0	33.2	41.0	9.9	0.0	0.0	24.5	24.5
LnGrp LOS				C	A	C	D	A	A	A	C	C
Approach Vol, veh/h					675			707			946	
Approach Delay, s/veh					29.9			16.7			24.5	
Approach LOS					C			B			C	

Timer - Assigned Phs	1	2		4		6						
Phs Duration (G+Y+Rc), s	14.0	40.6		32.1		54.5						
Change Period (Y+Rc), s	4.7	5.4		5.1		5.4						
Max Green Setting (Gmax), s	13.3	46.6		38.9		70.6						
Max Q Clear Time (g_c+I1), s	9.4	20.7		22.7		8.9						
Green Ext Time (p_c), s	0.1	14.5		3.0		10.9						

Intersection Summary	
HCM 6th Ctrl Delay	23.7
HCM 6th LOS	C

Notes

* HCM 6th computational engine requires equal clearance times for the phases crossing the barrier.



Movement	EBL	EBT	EBR	WBL	WBT	WBR	NBL	NBT	NBR	SBL	SBT	SBR
Lane Configurations												
Traffic Volume (veh/h)	75	1	215	0	0	0	0	590	157	239	694	0
Future Volume (veh/h)	75	1	215	0	0	0	0	590	157	239	694	0
Initial Q (Qb), veh	0	0	0				0	0	0	0	0	0
Ped-Bike Adj(A_pbT)	1.00		0.97				1.00		0.95	1.00		1.00
Parking Bus, Adj	1.00	1.00	1.00				1.00	1.00	1.00	1.00	1.00	1.00
Work Zone On Approach		No						No			No	
Adj Sat Flow, veh/h/ln	1870	1870	1870				0	1870	1870	1870	1870	0
Adj Flow Rate, veh/h	125	2	358				0	663	176	275	798	0
Peak Hour Factor	0.60	0.60	0.60				0.89	0.89	0.89	0.87	0.87	0.87
Percent Heavy Veh, %	2	2	2				0	2	2	2	2	0
Cap, veh/h	143	2	410				0	1042	442	316	1873	0
Arrive On Green	0.35	0.35	0.35				0.00	0.29	0.29	0.18	0.53	0.00
Sat Flow, veh/h	412	7	1180				0	3647	1507	1781	3647	0
Grp Volume(v), veh/h	485	0	0				0	663	176	275	798	0
Grp Sat Flow(s),veh/h/ln	1599	0	0				0	1777	1507	1781	1777	0
Q Serve(g_s), s	23.8	0.0	0.0				0.0	13.6	7.8	12.6	11.5	0.0
Cycle Q Clear(g_c), s	23.8	0.0	0.0				0.0	13.6	7.8	12.6	11.5	0.0
Prop In Lane	0.26		0.74				0.00		1.00	1.00		0.00
Lane Grp Cap(c), veh/h	556	0	0				0	1042	442	316	1873	0
V/C Ratio(X)	0.87	0.00	0.00				0.00	0.64	0.40	0.87	0.43	0.00
Avail Cap(c_a), veh/h	841	0	0				0	1337	567	624	2781	0
HCM Platoon Ratio	1.00	1.00	1.00				1.00	1.00	1.00	1.00	1.00	1.00
Upstream Filter(I)	1.00	0.00	0.00				0.00	1.00	1.00	1.00	1.00	0.00
Uniform Delay (d), s/veh	25.6	0.0	0.0				0.0	25.7	23.7	33.5	12.1	0.0
Incr Delay (d2), s/veh	6.7	0.0	0.0				0.0	2.3	2.1	2.9	0.6	0.0
Initial Q Delay(d3),s/veh	0.0	0.0	0.0				0.0	0.0	0.0	0.0	0.0	0.0
%ile BackOfQ(50%),veh/ln	9.6	0.0	0.0				0.0	5.7	2.9	5.4	4.1	0.0
Unsig. Movement Delay, s/veh												
LnGrp Delay(d),s/veh	32.3	0.0	0.0				0.0	28.0	25.8	36.4	12.6	0.0
LnGrp LOS	C	A	A				A	C	C	D	B	A
Approach Vol, veh/h		485						839			1073	
Approach Delay, s/veh		32.3						27.6			18.7	
Approach LOS		C						C			B	

Timer - Assigned Phs		2			5	6		8				
Phs Duration (G+Y+Rc), s		49.5			19.6	29.9		34.2				
Change Period (Y+Rc), s		5.4			* 4.7	5.4		5.1				
Max Green Setting (Gmax), s		65.5			* 29	31.5		44.0				
Max Q Clear Time (g_c+I1), s		13.5			14.6	15.6		25.8				
Green Ext Time (p_c), s		17.1			0.3	9.0		3.3				

Intersection Summary			
HCM 6th Ctrl Delay			24.6
HCM 6th LOS			C

Notes

* HCM 6th computational engine requires equal clearance times for the phases crossing the barrier.



Movement	EBL	EBT	EBR	WBL	WBT	WBR	NBL	NBT	NBR	SBL	SBT	SBR
Lane Configurations												
Traffic Volume (veh/h)	0	0	0	91	2	125	0	462	160	0	354	84
Future Volume (veh/h)	0	0	0	91	2	125	0	462	160	0	354	84
Initial Q (Qb), veh				0	0	0	0	0	0	0	0	0
Ped-Bike Adj(A_pbT)				1.00		0.97	1.00		0.96	1.00		0.96
Parking Bus, Adj				1.00	1.00	1.00	1.00	1.00	1.00	1.00	1.00	1.00
Work Zone On Approach					No			No			No	
Adj Sat Flow, veh/h/ln				1870	1870	1870	0	1870	1870	0	1870	1870
Adj Flow Rate, veh/h				123	3	169	0	537	186	0	427	101
Peak Hour Factor				0.74	0.74	0.74	0.86	0.86	0.86	0.83	0.83	0.83
Percent Heavy Veh, %				2	2	2	0	2	2	0	2	2
Cap, veh/h				388	9	341	0	1426	610	0	1654	376
Arrive On Green				0.22	0.22	0.22	0.00	0.40	0.40	0.00	0.40	0.40
Sat Flow, veh/h				1741	42	1530	0	3647	1520	0	4290	937
Grp Volume(v), veh/h				126	0	169	0	537	186	0	350	178
Grp Sat Flow(s),veh/h/ln				1783	0	1530	0	1777	1520	0	1702	1654
Q Serve(g_s), s				2.0	0.0	3.2	0.0	3.5	2.8	0.0	2.3	2.4
Cycle Q Clear(g_c), s				2.0	0.0	3.2	0.0	3.5	2.8	0.0	2.3	2.4
Prop In Lane				0.98		1.00	0.00		1.00	0.00		0.57
Lane Grp Cap(c), veh/h				397	0	341	0	1426	610	0	1366	664
V/C Ratio(X)				0.32	0.00	0.50	0.00	0.38	0.31	0.00	0.26	0.27
Avail Cap(c_a), veh/h				2570	0	2204	0	6372	2724	0	6103	2966
HCM Platoon Ratio				1.00	1.00	1.00	1.00	1.00	1.00	1.00	1.00	1.00
Upstream Filter(I)				1.00	0.00	1.00	0.00	1.00	1.00	0.00	1.00	1.00
Uniform Delay (d), s/veh				10.8	0.0	11.3	0.0	7.0	6.8	0.0	6.6	6.7
Incr Delay (d2), s/veh				0.5	0.0	1.1	0.0	0.2	0.3	0.0	0.1	0.2
Initial Q Delay(d3),s/veh				0.0	0.0	0.0	0.0	0.0	0.0	0.0	0.0	0.0
%ile BackOfQ(50%),veh/ln				0.6	0.0	0.9	0.0	0.7	0.5	0.0	0.4	0.5
Unsig. Movement Delay, s/veh												
LnGrp Delay(d),s/veh				11.3	0.0	12.4	0.0	7.2	7.1	0.0	6.7	6.9
LnGrp LOS				B	A	B	A	A	A	A	A	A
Approach Vol, veh/h					295			723			528	
Approach Delay, s/veh					11.9			7.2			6.8	
Approach LOS					B			A			A	

Timer - Assigned Phs	2		6		8			
Phs Duration (G+Y+Rc), s	19.7		19.7		13.5			
Change Period (Y+Rc), s	6.4		6.4		6.1			
Max Green Setting (Gmax), s	59.6		59.6		47.9			
Max Q Clear Time (g_c+I1), s	5.5		4.4		5.2			
Green Ext Time (p_c), s	4.5		3.6		1.4			

Intersection Summary		
HCM 6th Ctrl Delay	7.9	
HCM 6th LOS	A	



Movement	EBL	EBT	EBR	WBL	WBT	WBR	NBL	NBT	NBR	SBL	SBT	SBR
Lane Configurations												
Traffic Volume (veh/h)	85	2	171	0	0	0	0	538	52	71	373	0
Future Volume (veh/h)	85	2	171	0	0	0	0	538	52	71	373	0
Initial Q (Qb), veh	0	0	0				0	0	0	0	0	0
Ped-Bike Adj(A_pbT)	1.00		0.93				1.00		0.95	1.00		1.00
Parking Bus, Adj	1.00	1.00	1.00				1.00	1.00	1.00	1.00	1.00	1.00
Work Zone On Approach		No						No			No	
Adj Sat Flow, veh/h/ln	1870	1870	1870				0	1870	1870	1870	1870	0
Adj Flow Rate, veh/h	102	2	206				0	626	60	97	511	0
Peak Hour Factor	0.83	0.83	0.83				0.86	0.86	0.86	0.73	0.73	0.73
Percent Heavy Veh, %	2	2	2				0	2	2	2	2	0
Cap, veh/h	330	6	493				0	1160	494	139	1891	0
Arrive On Green	0.19	0.19	0.19				0.00	0.33	0.33	0.08	0.53	0.00
Sat Flow, veh/h	1749	34	2608				0	3647	1512	1781	3647	0
Grp Volume(v), veh/h	104	0	206				0	626	60	97	511	0
Grp Sat Flow(s),veh/h/ln	1783	0	1304				0	1777	1512	1781	1777	0
Q Serve(g_s), s	2.3	0.0	3.1				0.0	6.4	1.2	2.4	3.5	0.0
Cycle Q Clear(g_c), s	2.3	0.0	3.1				0.0	6.4	1.2	2.4	3.5	0.0
Prop In Lane	0.98		1.00				0.00		1.00	1.00		0.00
Lane Grp Cap(c), veh/h	337	0	493				0	1160	494	139	1891	0
V/C Ratio(X)	0.31	0.00	0.42				0.00	0.54	0.12	0.70	0.27	0.00
Avail Cap(c_a), veh/h	1509	0	2207				0	3459	1472	807	5522	0
HCM Platoon Ratio	1.00	1.00	1.00				1.00	1.00	1.00	1.00	1.00	1.00
Upstream Filter(I)	1.00	0.00	1.00				0.00	1.00	1.00	1.00	1.00	0.00
Uniform Delay (d), s/veh	15.6	0.0	16.0				0.0	12.3	10.6	20.1	5.7	0.0
Incr Delay (d2), s/veh	0.5	0.0	0.6				0.0	0.4	0.1	6.1	0.1	0.0
Initial Q Delay(d3),s/veh	0.0	0.0	0.0				0.0	0.0	0.0	0.0	0.0	0.0
%ile BackOfQ(50%),veh/ln	0.8	0.0	0.8				0.0	2.0	0.3	1.1	0.8	0.0
Unsig. Movement Delay, s/veh												
LnGrp Delay(d),s/veh	16.2	0.0	16.6				0.0	12.7	10.7	26.2	5.8	0.0
LnGrp LOS	B	A	B				A	B	B	C	A	A
Approach Vol, veh/h		310						686			608	
Approach Delay, s/veh		16.4						12.5			9.1	
Approach LOS		B						B			A	

Timer - Assigned Phs	1	2	4	6
Phs Duration (G+Y+Rc), s	9.2	21.0	14.6	30.2
Change Period (Y+Rc), s	5.7	6.4	6.1	6.4
Max Green Setting (Gmax), s	4.0	43.6	37.9	69.6
Max Q Clear Time (g_c+I1), s	4.4	8.4	5.1	5.5
Green Ext Time (p_c), s	0.2	4.6	1.5	3.6

Intersection Summary	
HCM 6th Ctrl Delay	12.0
HCM 6th LOS	B

Notes

* HCM 6th computational engine requires equal clearance times for the phases crossing the barrier.



Movement	EBL	EBT	EBR	WBL	WBT	WBR	NBL	NBT	NBR	SBL	SBT	SBR
Lane Configurations												
Traffic Volume (veh/h)	70	88	33	2	88	59	54	80	1	116	66	31
Future Volume (veh/h)	70	88	33	2	88	59	54	80	1	116	66	31
Initial Q (Qb), veh	0	0	0	0	0	0	0	0	0	0	0	0
Ped-Bike Adj(A_pbT)	1.00		0.96	1.00		0.95	1.00		0.98	1.00		0.96
Parking Bus, Adj	1.00	1.00	1.00	1.00	1.00	1.00	1.00	1.00	1.00	1.00	1.00	1.00
Work Zone On Approach		No			No			No			No	
Adj Sat Flow, veh/h/ln	1870	1870	1870	1870	1870	1870	1870	1870	1870	1870	1870	1870
Adj Flow Rate, veh/h	89	111	42	3	117	79	75	111	1	215	122	57
Peak Hour Factor	0.79	0.79	0.79	0.75	0.75	0.75	0.72	0.72	0.72	0.54	0.54	0.54
Percent Heavy Veh, %	2	2	2	2	2	2	2	2	2	2	2	2
Cap, veh/h	115	341	277	7	228	183	97	1432	623	255	1168	511
Arrive On Green	0.06	0.18	0.18	0.00	0.12	0.12	0.05	0.40	0.40	0.14	0.49	0.49
Sat Flow, veh/h	1781	1870	1522	1781	1870	1500	1781	3554	1546	1781	2373	1039
Grp Volume(v), veh/h	89	111	42	3	117	79	75	111	1	215	89	90
Grp Sat Flow(s),veh/h/ln	1781	1870	1522	1781	1870	1500	1781	1777	1546	1781	1777	1636
Q Serve(g_s), s	3.6	3.7	1.7	0.1	4.2	3.5	3.0	1.4	0.0	8.5	1.9	2.1
Cycle Q Clear(g_c), s	3.6	3.7	1.7	0.1	4.2	3.5	3.0	1.4	0.0	8.5	1.9	2.1
Prop In Lane	1.00		1.00	1.00		1.00	1.00		1.00	1.00		0.64
Lane Grp Cap(c), veh/h	115	341	277	7	228	183	97	1432	623	255	874	805
V/C Ratio(X)	0.78	0.33	0.15	0.42	0.51	0.43	0.78	0.08	0.00	0.84	0.10	0.11
Avail Cap(c_a), veh/h	258	929	756	123	787	631	241	1432	623	256	874	805
HCM Platoon Ratio	1.00	1.00	1.00	1.00	1.00	1.00	1.00	1.00	1.00	1.00	1.00	1.00
Upstream Filter(I)	1.00	1.00	1.00	1.00	1.00	1.00	1.00	1.00	1.00	1.00	1.00	1.00
Uniform Delay (d), s/veh	33.4	25.8	24.9	36.0	29.8	29.5	33.8	13.3	12.9	30.2	9.8	9.9
Incr Delay (d2), s/veh	4.2	0.6	0.3	13.6	1.8	1.6	5.0	0.1	0.0	20.7	0.2	0.3
Initial Q Delay(d3),s/veh	0.0	0.0	0.0	0.0	0.0	0.0	0.0	0.0	0.0	0.0	0.0	0.0
%ile BackOfQ(50%),veh/ln	1.6	1.7	0.6	0.1	2.0	1.3	1.4	0.5	0.0	5.0	0.7	0.8
Unsig. Movement Delay, s/veh												
LnGrp Delay(d),s/veh	37.6	26.3	25.2	49.6	31.6	31.1	38.8	13.4	12.9	50.9	10.1	10.2
LnGrp LOS	D	C	C	D	C	C	D	B	B	D	B	B
Approach Vol, veh/h		242			199			187			394	
Approach Delay, s/veh		30.3			31.7			23.6			32.4	
Approach LOS		C			C			C			C	

Timer - Assigned Phs	1	2	3	4	5	6	7	8
Phs Duration (G+Y+Rc), s	8.5	40.8	9.3	13.9	15.0	34.3	4.9	18.3
Change Period (Y+Rc), s	4.6	5.1	4.6	5.1	4.6	5.1	4.6	5.1
Max Green Setting (Gmax), s	3.9	29.8	10.5	30.5	10.4	29.2	5.0	36.0
Max Q Clear Time (g_c+I1), s	5.0	4.1	5.6	6.2	10.5	3.4	2.1	5.7
Green Ext Time (p_c), s	0.0	1.4	0.0	0.9	0.0	0.9	0.0	0.7

Intersection Summary	
HCM 6th Ctrl Delay	30.1
HCM 6th LOS	C



Movement	EBL	EBT	EBR	WBL	WBT	WBR	NBL	NBT	NBR	SBL	SBT	SBR
Lane Configurations												
Traffic Volume (veh/h)	139	75	68	43	60	171	65	306	61	356	395	183
Future Volume (veh/h)	139	75	68	43	60	171	65	306	61	356	395	183
Initial Q (Qb), veh	0	0	0	0	0	0	0	0	0	0	0	0
Ped-Bike Adj(A_pbT)	1.00		0.96	1.00		0.95	1.00		0.96	1.00		0.97
Parking Bus, Adj	1.00	1.00	1.00	1.00	1.00	1.00	1.00	1.00	1.00	1.00	1.00	1.00
Work Zone On Approach		No			No			No			No	
Adj Sat Flow, veh/h/ln	1870	1870	1870	1870	1870	1870	1870	1870	1870	1870	1870	1870
Adj Flow Rate, veh/h	183	99	89	52	72	206	76	356	71	445	494	229
Peak Hour Factor	0.76	0.76	0.76	0.83	0.83	0.83	0.86	0.86	0.86	0.80	0.80	0.80
Percent Heavy Veh, %	2	2	2	2	2	2	2	2	2	2	2	2
Cap, veh/h	283	298	241	271	285	602	121	593	117	417	878	404
Arrive On Green	0.16	0.16	0.16	0.15	0.15	0.15	0.07	0.20	0.20	0.23	0.37	0.37
Sat Flow, veh/h	1781	1870	1515	1781	1870	1513	1781	2938	578	1781	2341	1079
Grp Volume(v), veh/h	183	99	89	52	72	206	76	213	214	445	374	349
Grp Sat Flow(s),veh/h/ln	1781	1870	1515	1781	1870	1513	1781	1777	1740	1781	1777	1643
Q Serve(g_s), s	10.1	4.9	5.5	2.7	3.6	10.1	4.4	11.4	11.7	24.6	17.5	17.7
Cycle Q Clear(g_c), s	10.1	4.9	5.5	2.7	3.6	10.1	4.4	11.4	11.7	24.6	17.5	17.7
Prop In Lane	1.00		1.00	1.00		1.00	1.00		0.33	1.00		0.66
Lane Grp Cap(c), veh/h	283	298	241	271	285	602	121	359	351	417	666	616
V/C Ratio(X)	0.65	0.33	0.37	0.19	0.25	0.34	0.63	0.60	0.61	1.07	0.56	0.57
Avail Cap(c_a), veh/h	560	588	476	611	641	890	217	506	496	417	721	667
HCM Platoon Ratio	1.00	1.00	1.00	1.00	1.00	1.00	1.00	1.00	1.00	1.00	1.00	1.00
Upstream Filter(I)	1.00	1.00	1.00	1.00	1.00	1.00	1.00	1.00	1.00	1.00	1.00	1.00
Uniform Delay (d), s/veh	41.4	39.2	39.4	38.9	39.2	22.9	47.6	38.0	38.1	40.2	26.0	26.0
Incr Delay (d2), s/veh	3.5	0.9	1.3	0.1	0.2	0.1	2.0	5.6	6.1	62.7	2.7	3.0
Initial Q Delay(d3),s/veh	0.0	0.0	0.0	0.0	0.0	0.0	0.0	0.0	0.0	0.0	0.0	0.0
%ile BackOfQ(50%),veh/ln	4.6	2.3	2.1	1.2	1.6	3.5	2.0	5.4	5.4	17.6	7.6	7.1
Unsig. Movement Delay, s/veh												
LnGrp Delay(d),s/veh	44.9	40.1	40.8	39.0	39.4	23.0	49.6	43.6	44.2	102.9	28.7	29.0
LnGrp LOS	D	D	D	D	D	C	D	D	D	F	C	C
Approach Vol, veh/h		371			330			503			1168	
Approach Delay, s/veh		42.6			29.1			44.8			57.1	
Approach LOS		D			C			D			E	

Timer - Assigned Phs	1	2		4	5	6		8
Phs Duration (G+Y+Rc), s	11.8	46.7		22.4	30.0	28.5		24.1
Change Period (Y+Rc), s	* 4.7	* 7.3		6.4	5.4	7.3		7.4
Max Green Setting (Gmax), s	* 13	* 43		36.0	24.6	29.9		33.0
Max Q Clear Time (g_c+I1), s	6.4	19.7		12.1	26.6	13.7		12.1
Green Ext Time (p_c), s	0.0	10.3		0.6	0.0	4.8		2.0

Intersection Summary	
HCM 6th Ctrl Delay	48.3
HCM 6th LOS	D

Notes

* HCM 6th computational engine requires equal clearance times for the phases crossing the barrier.

Intersection	
Int Delay, s/veh	0.9

Movement	EBL	EBR	NBL	NBT	SBT	SBR
Lane Configurations						
Traffic Vol, veh/h	4	93	96	632	365	10
Future Vol, veh/h	4	93	96	632	365	10
Conflicting Peds, #/hr	10	10	10	0	0	10
Sign Control	Free	Free	Free	Free	Stop	Stop
RT Channelized	-	None	-	None	-	None
Storage Length	0	-	-	-	-	-
Veh in Median Storage, #	2	-	-	0	0	-
Grade, %	0	-	-	0	0	-
Peak Hour Factor	63	63	70	70	75	75
Heavy Vehicles, %	2	2	2	2	2	2
Mvmt Flow	6	148	137	903	487	13

Major/Minor	Major1		Minor2	
Conflicting Flow All	10	0	1187	20
Stage 1	-	-	10	-
Stage 2	-	-	1177	-
Critical Hdwy	4.14	-	6.54	6.94
Critical Hdwy Stg 1	-	-	-	-
Critical Hdwy Stg 2	-	-	5.54	-
Follow-up Hdwy	2.22	-	4.02	3.32
Pot Cap-1 Maneuver	1608	-	~ 187	1053
Stage 1	-	-	-	-
Stage 2	-	-	~ 263	-
Platoon blocked, %		-		
Mov Cap-1 Maneuver	1593	-	0	1033
Mov Cap-2 Maneuver	-	-	0	-
Stage 1	-	-	0	-
Stage 2	-	-	0	-

Approach	NB	SB
HCM Control Delay, s	1.4	
HCM LOS		-

Minor Lane/Major Mvmt	NBL	NBT	SBLn1	SBLn2
Capacity (veh/h)	1593	-	-	1033
HCM Lane V/C Ratio	0.086	-	-	0.248
HCM Control Delay (s)	7.5	0.5	-	9.6
HCM Lane LOS	A	A	-	A
HCM 95th %tile Q(veh)	0.3	-	-	1

Notes			
~: Volume exceeds capacity	$: Delay exceeds 300s	+: Computation Not Defined	*: All major volume in platoon

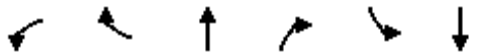

Movement	WBL	WBR	NBT	NBR	SBL	SBT
Lane Configurations						
Traffic Volume (veh/h)	11	66	402	51	73	216
Future Volume (veh/h)	11	66	402	51	73	216
Initial Q (Qb), veh	0	0	0	0	0	0
Ped-Bike Adj(A_pbT)	1.00	1.00		0.96	1.00	
Parking Bus, Adj	1.00	1.00	1.00	1.00	1.00	1.00
Work Zone On Approach	No		No			No
Adj Sat Flow, veh/h/ln	1870	1870	1870	1870	1870	1870
Adj Flow Rate, veh/h	12	73	515	65	85	251
Peak Hour Factor	0.91	0.91	0.78	0.78	0.86	0.86
Percent Heavy Veh, %	2	2	2	2	2	2
Cap, veh/h	151	134	1302	164	201	1166
Arrive On Green	0.08	0.08	0.41	0.41	0.11	0.62
Sat Flow, veh/h	1781	1585	3252	397	1781	1870
Grp Volume(v), veh/h	12	73	289	291	85	251
Grp Sat Flow(s),veh/h/ln	1781	1585	1777	1779	1781	1870
Q Serve(g_s), s	0.3	2.1	5.5	5.5	2.1	2.8
Cycle Q Clear(g_c), s	0.3	2.1	5.5	5.5	2.1	2.8
Prop In Lane	1.00	1.00		0.22	1.00	
Lane Grp Cap(c), veh/h	151	134	733	733	201	1166
V/C Ratio(X)	0.08	0.54	0.39	0.40	0.42	0.22
Avail Cap(c_a), veh/h	1032	919	2675	2678	1162	4274
HCM Platoon Ratio	1.00	1.00	1.00	1.00	1.00	1.00
Upstream Filter(I)	1.00	1.00	1.00	1.00	1.00	1.00
Uniform Delay (d), s/veh	20.2	21.1	9.9	9.9	19.8	3.9
Incr Delay (d2), s/veh	0.2	3.4	1.3	1.3	0.5	0.3
Initial Q Delay(d3),s/veh	0.0	0.0	0.0	0.0	0.0	0.0
%ile BackOfQ(50%),veh/ln	0.1	2.0	1.8	1.8	0.8	0.6
Unsig. Movement Delay, s/veh						
LnGrp Delay(d),s/veh	20.4	24.4	11.1	11.2	20.3	4.3
LnGrp LOS	C	C	B	B	C	A
Approach Vol, veh/h	85		580			336
Approach Delay, s/veh	23.9		11.2			8.3
Approach LOS	C		B			A

Timer - Assigned Phs		2		4	5	6
Phs Duration (G+Y+Rc), s		37.7		10.3	10.1	27.6
Change Period (Y+Rc), s		* 7.8		6.2	* 4.7	7.8
Max Green Setting (Gmax), s		* 1.1E2		27.8	* 31	72.2
Max Q Clear Time (g_c+I1), s		4.8		4.1	4.1	7.5
Green Ext Time (p_c), s		4.3		0.2	0.1	10.9

Intersection Summary	
HCM 6th Ctrl Delay	11.3
HCM 6th LOS	B

Notes

* HCM 6th computational engine requires equal clearance times for the phases crossing the barrier.

Intersection	
Int Delay, s/veh	2.5

Movement	EBT	EBR	WBL	WBT	NBL	NBR
Lane Configurations						
Traffic Vol, veh/h	75	13	11	130	24	41
Future Vol, veh/h	75	13	11	130	24	41
Conflicting Peds, #/hr	0	10	10	0	10	10
Sign Control	Free	Free	Free	Free	Stop	Stop
RT Channelized	-	None	-	None	-	None
Storage Length	-	-	-	-	0	-
Veh in Median Storage, #	0	-	-	0	0	-
Grade, %	0	-	-	0	0	-
Peak Hour Factor	91	91	57	57	70	70
Heavy Vehicles, %	2	2	2	2	2	2
Mvmt Flow	82	14	19	228	34	59

Major/Minor	Major1		Major2		Minor1	
Conflicting Flow All	0	0	106	0	375	109
Stage 1	-	-	-	-	99	-
Stage 2	-	-	-	-	276	-
Critical Hdwy	-	-	4.12	-	6.42	6.22
Critical Hdwy Stg 1	-	-	-	-	5.42	-
Critical Hdwy Stg 2	-	-	-	-	5.42	-
Follow-up Hdwy	-	-	2.218	-	3.518	3.318
Pot Cap-1 Maneuver	-	-	1485	-	626	945
Stage 1	-	-	-	-	925	-
Stage 2	-	-	-	-	771	-
Platoon blocked, %	-	-		-		
Mov Cap-1 Maneuver	-	-	1471	-	604	927
Mov Cap-2 Maneuver	-	-	-	-	604	-
Stage 1	-	-	-	-	916	-
Stage 2	-	-	-	-	752	-

Approach	EB	WB	NB
HCM Control Delay, s	0	0.6	10.3
HCM LOS			B

Minor Lane/Major Mvmt	NBLn1	EBT	EBR	WBL	WBT
Capacity (veh/h)	774	-	-	1471	-
HCM Lane V/C Ratio	0.12	-	-	0.013	-
HCM Control Delay (s)	10.3	-	-	7.5	0
HCM Lane LOS	B	-	-	A	A
HCM 95th %tile Q(veh)	0.4	-	-	0	-

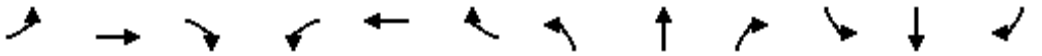

Movement	EBL	EBT	EBR	WBL	WBT	WBR	NBL	NBT	NBR	SBL	SBT	SBR
Lane Configurations												
Traffic Volume (veh/h)	45	46	26	5	48	81	29	417	11	94	219	68
Future Volume (veh/h)	45	46	26	5	48	81	29	417	11	94	219	68
Initial Q (Qb), veh	0	0	0	0	0	0	0	0	0	0	0	0
Ped-Bike Adj(A_pbT)	1.00		0.97	1.00		1.00	1.00		0.97	1.00		0.97
Parking Bus, Adj	1.00	1.00	1.00	1.00	1.00	1.00	1.00	1.00	1.00	1.00	1.00	1.00
Work Zone On Approach		No			No			No			No	
Adj Sat Flow, veh/h/ln	1870	1870	1870	1870	1870	1870	1870	1870	1870	1870	1870	1870
Adj Flow Rate, veh/h	47	48	27	6	60	0	34	491	13	122	284	88
Peak Hour Factor	0.95	0.95	0.95	0.80	0.80	0.80	0.85	0.85	0.85	0.77	0.77	0.77
Percent Heavy Veh, %	2	2	2	2	2	2	2	2	2	2	2	2
Cap, veh/h	85	539	276	14	713		67	962	416	163	867	262
Arrive On Green	0.05	0.24	0.24	0.01	0.20	0.00	0.04	0.27	0.27	0.09	0.33	0.33
Sat Flow, veh/h	1781	2246	1148	1781	3554	1585	1781	3554	1536	1781	2668	807
Grp Volume(v), veh/h	47	37	38	6	60	0	34	491	13	122	187	185
Grp Sat Flow(s),veh/h/ln	1781	1777	1617	1781	1777	1585	1781	1777	1536	1781	1777	1698
Q Serve(g_s), s	1.3	0.8	0.9	0.2	0.7	0.0	1.0	6.0	0.3	3.4	4.1	4.3
Cycle Q Clear(g_c), s	1.3	0.8	0.9	0.2	0.7	0.0	1.0	6.0	0.3	3.4	4.1	4.3
Prop In Lane	1.00		0.71	1.00		1.00	1.00		1.00	1.00		0.48
Lane Grp Cap(c), veh/h	85	427	388	14	713		67	962	416	163	578	552
V/C Ratio(X)	0.56	0.09	0.10	0.42	0.08		0.51	0.51	0.03	0.75	0.32	0.34
Avail Cap(c_a), veh/h	532	1546	1407	255	2541		428	3388	1465	980	2245	2145
HCM Platoon Ratio	1.00	1.00	1.00	1.00	1.00	1.00	1.00	1.00	1.00	1.00	1.00	1.00
Upstream Filter(I)	1.00	1.00	1.00	1.00	1.00	0.00	1.00	1.00	1.00	1.00	1.00	1.00
Uniform Delay (d), s/veh	24.0	15.2	15.3	25.5	16.8	0.0	24.4	15.9	13.8	22.8	13.1	13.2
Incr Delay (d2), s/veh	5.6	0.1	0.1	18.6	0.1	0.0	5.9	0.4	0.0	6.6	0.3	0.4
Initial Q Delay(d3),s/veh	0.0	0.0	0.0	0.0	0.0	0.0	0.0	0.0	0.0	0.0	0.0	0.0
%ile BackOfQ(50%),veh/ln	0.6	0.3	0.3	0.1	0.3	0.0	0.5	2.1	0.1	1.6	1.4	1.4
Unsig. Movement Delay, s/veh												
LnGrp Delay(d),s/veh	29.6	15.3	15.4	44.1	16.8	0.0	30.3	16.3	13.9	29.5	13.5	13.5
LnGrp LOS	C	B	B	D	B		C	B	B	C	B	B
Approach Vol, veh/h		122			66	A		538			494	
Approach Delay, s/veh		20.8			19.3			17.2			17.4	
Approach LOS		C			B			B			B	

Timer - Assigned Phs	1	2	3	4	5	6	7	8
Phs Duration (G+Y+Rc), s	9.3	19.8	5.0	17.5	6.5	22.6	7.1	15.4
Change Period (Y+Rc), s	4.6	5.8	4.6	5.1	4.6	5.8	4.6	5.1
Max Green Setting (Gmax), s	28.4	49.2	7.4	44.9	12.4	65.2	15.4	36.9
Max Q Clear Time (g_c+I1), s	5.4	8.0	2.2	2.9	3.0	6.3	3.3	2.7
Green Ext Time (p_c), s	0.3	3.4	0.0	0.4	0.0	2.2	0.1	0.3

Intersection Summary	
HCM 6th Ctrl Delay	17.8
HCM 6th LOS	B

Notes

Unsignalized Delay for [WBR] is excluded from calculations of the approach delay and intersection delay.

Intersection	
Intersection Delay, s/veh	67.1
Intersection LOS	F

Movement	EBL	EBT	EBR	WBL	WBT	WBR	NBL	NBT	NBR	SBL	SBT	SBR
Lane Configurations												
Traffic Vol, veh/h	121	147	24	31	220	21	46	117	97	57	46	209
Future Vol, veh/h	121	147	24	31	220	21	46	117	97	57	46	209
Peak Hour Factor	0.69	0.69	0.69	0.73	0.73	0.73	0.67	0.67	0.67	0.77	0.77	0.77
Heavy Vehicles, %	2	2	2	2	2	2	2	2	2	2	2	2
Mvmt Flow	175	213	35	42	301	29	69	175	145	74	60	271
Number of Lanes	0	1	1	0	1	0	0	1	0	0	1	1

Approach	EB	WB	NB	SB
Opposing Approach	WB	EB	SB	NB
Opposing Lanes	1	2	2	1
Conflicting Approach Left	SB	NB	EB	WB
Conflicting Lanes Left	2	1	2	1
Conflicting Approach Right	NB	SB	WB	EB
Conflicting Lanes Right	1	2	1	2
HCM Control Delay	79.3	79.7	84.5	26.1
HCM LOS	F	F	F	D

Lane	NBLn1	EBLn1	EBLn2	WBLn1	SBLn1	SBLn2
Vol Left, %	18%	45%	0%	11%	55%	0%
Vol Thru, %	45%	55%	0%	81%	45%	0%
Vol Right, %	37%	0%	100%	8%	0%	100%
Sign Control	Stop	Stop	Stop	Stop	Stop	Stop
Traffic Vol by Lane	260	268	24	272	103	209
LT Vol	46	121	0	31	57	0
Through Vol	117	147	0	220	46	0
RT Vol	97	0	24	21	0	209
Lane Flow Rate	388	388	35	373	134	271
Geometry Grp	6	7	7	6	7	7
Degree of Util (X)	1.02	1.024	0.083	0.998	0.371	0.679
Departure Headway (Hd)	9.804	9.805	8.836	10.036	10.348	9.322
Convergence, Y/N	Yes	Yes	Yes	Yes	Yes	Yes
Cap	373	373	408	365	350	391
Service Time	7.804	7.505	6.536	8.036	8.048	7.022
HCM Lane V/C Ratio	1.04	1.04	0.086	1.022	0.383	0.693
HCM Control Delay	84.5	85.3	12.3	79.7	19	29.6
HCM Lane LOS	F	F	B	F	C	D
HCM 95th-tile Q	12.3	12.4	0.3	11.5	1.7	4.8

Intersection	
Intersection Delay, s/veh	91.5
Intersection LOS	F

Movement	EBL	EBT	EBR	WBL	WBT	WBR	NBL	NBT	NBR	SBL	SBT	SBR
Lane Configurations												
Traffic Vol, veh/h	49	230	21	0	201	98	20	164	4	119	129	51
Future Vol, veh/h	49	230	21	0	201	98	20	164	4	119	129	51
Peak Hour Factor	0.68	0.68	0.68	0.70	0.70	0.70	0.64	0.64	0.64	0.69	0.69	0.69
Heavy Vehicles, %	2	2	2	2	2	2	2	2	2	2	2	2
Mvmt Flow	72	338	31	0	287	140	31	256	6	172	187	74
Number of Lanes	0	1	0	0	1	0	0	1	0	0	1	0

Approach	EB	WB	NB	SB
Opposing Approach	WB	EB	SB	NB
Opposing Lanes	1	1	1	1
Conflicting Approach Left	SB	NB	EB	WB
Conflicting Lanes Left	1	1	1	1
Conflicting Approach Right	NB	SB	WB	EB
Conflicting Lanes Right	1	1	1	1
HCM Control Delay	110.9	92.5	42.6	103.8
HCM LOS	F	F	E	F

Lane	NBLn1	EBLn1	WBLn1	SBLn1
Vol Left, %	11%	16%	0%	40%
Vol Thru, %	87%	77%	67%	43%
Vol Right, %	2%	7%	33%	17%
Sign Control	Stop	Stop	Stop	Stop
Traffic Vol by Lane	188	300	299	299
LT Vol	20	49	0	119
Through Vol	164	230	201	129
RT Vol	4	21	98	51
Lane Flow Rate	294	441	427	433
Geometry Grp	1	1	1	1
Degree of Util (X)	0.782	1.11	1.052	1.088
Departure Headway (Hd)	10.523	9.594	9.541	9.605
Convergence, Y/N	Yes	Yes	Yes	Yes
Cap	347	384	384	381
Service Time	8.523	7.594	7.541	7.605
HCM Lane V/C Ratio	0.847	1.148	1.112	1.136
HCM Control Delay	42.6	110.9	92.5	103.8
HCM Lane LOS	E	F	F	F
HCM 95th-tile Q	6.4	15.3	13.5	14.6

Intersection	
Intersection Delay, s/veh	60.5
Intersection LOS	F

Movement	EBL	EBT	EBR	WBL	WBT	WBR	NBL	NBT	NBR	SBL	SBT	SBR
Lane Configurations												
Traffic Vol, veh/h	97	189	13	23	218	79	8	170	9	47	151	176
Future Vol, veh/h	97	189	13	23	218	79	8	170	9	47	151	176
Peak Hour Factor	0.61	0.61	0.61	0.70	0.70	0.70	0.87	0.87	0.87	0.76	0.76	0.76
Heavy Vehicles, %	2	2	2	2	2	2	2	2	2	2	2	2
Mvmt Flow	159	310	21	33	311	113	9	195	10	62	199	232
Number of Lanes	1	1	0	0	1	0	1	1	0	1	1	0

Approach	EB	WB	NB	SB
Opposing Approach	WB	EB	SB	NB
Opposing Lanes	1	2	2	2
Conflicting Approach Left	SB	NB	EB	WB
Conflicting Lanes Left	2	2	2	1
Conflicting Approach Right	NB	SB	WB	EB
Conflicting Lanes Right	2	2	1	2
HCM Control Delay	32.6	107	23.1	61.3
HCM LOS	D	F	C	F

Lane	NBLn1	NBLn2	EBLn1	EBLn2	WBLn1	SBLn1	SBLn2
Vol Left, %	100%	0%	100%	0%	7%	100%	0%
Vol Thru, %	0%	95%	0%	94%	68%	0%	46%
Vol Right, %	0%	5%	0%	6%	25%	0%	54%
Sign Control	Stop	Stop	Stop	Stop	Stop	Stop	Stop
Traffic Vol by Lane	8	179	97	202	320	47	327
LT Vol	8	0	97	0	23	47	0
Through Vol	0	170	0	189	218	0	151
RT Vol	0	9	0	13	79	0	176
Lane Flow Rate	9	206	159	331	457	62	430
Geometry Grp	7	7	7	7	6	7	7
Degree of Util (X)	0.025	0.535	0.407	0.797	1.109	0.156	0.978
Departure Headway (Hd)	10.478	9.913	9.654	9.085	8.735	9.527	8.609
Convergence, Y/N	Yes	Yes	Yes	Yes	Yes	Yes	Yes
Cap	344	366	375	401	416	379	426
Service Time	8.178	7.613	7.354	6.785	6.808	7.227	6.309
HCM Lane V/C Ratio	0.026	0.563	0.424	0.825	1.099	0.164	1.009
HCM Control Delay	13.4	23.5	18.8	39.2	107	14	68.1
HCM Lane LOS	B	C	C	E	F	B	F
HCM 95th-tile Q	0.1	3	1.9	7	16.1	0.5	11.8



Movement	EBL	EBT	EBR	WBL	WBT	WBR	NBL	NBT	NBR	SBL	SBT	SBR
Lane Configurations												
Traffic Volume (veh/h)	63	154	20	4	213	74	10	174	1	39	122	98
Future Volume (veh/h)	63	154	20	4	213	74	10	174	1	39	122	98
Initial Q (Qb), veh	0	0	0	0	0	0	0	0	0	0	0	0
Ped-Bike Adj(A_pbT)	0.99		0.95	0.99		0.95	1.00		0.95	1.00		0.95
Parking Bus, Adj	1.00	1.00	1.00	1.00	1.00	1.00	1.00	1.00	1.00	1.00	1.00	1.00
Work Zone On Approach		No			No			No			No	
Adj Sat Flow, veh/h/ln	1870	1870	1870	1870	1870	1870	1870	1870	1870	1870	1870	1870
Adj Flow Rate, veh/h	93	226	29	6	318	110	14	252	1	42	133	107
Peak Hour Factor	0.68	0.68	0.68	0.67	0.67	0.67	0.69	0.69	0.69	0.92	0.92	0.92
Percent Heavy Veh, %	2	2	2	2	2	2	2	2	2	2	2	2
Cap, veh/h	177	350	40	69	416	142	44	472	2	108	271	218
Arrive On Green	0.32	0.32	0.32	0.32	0.32	0.32	0.02	0.25	0.25	0.06	0.29	0.29
Sat Flow, veh/h	294	1098	126	7	1307	446	1781	1861	7	1781	936	753
Grp Volume(v), veh/h	348	0	0	434	0	0	14	0	253	42	0	240
Grp Sat Flow(s),veh/h/ln	1518	0	0	1760	0	0	1781	0	1869	1781	0	1689
Q Serve(g_s), s	0.0	0.0	0.0	0.0	0.0	0.0	0.4	0.0	6.4	1.2	0.0	6.4
Cycle Q Clear(g_c), s	10.7	0.0	0.0	12.2	0.0	0.0	0.4	0.0	6.4	1.2	0.0	6.4
Prop In Lane	0.27		0.08	0.01		0.25	1.00		0.00	1.00		0.45
Lane Grp Cap(c), veh/h	567	0	0	627	0	0	44	0	474	108	0	489
V/C Ratio(X)	0.61	0.00	0.00	0.69	0.00	0.00	0.32	0.00	0.53	0.39	0.00	0.49
Avail Cap(c_a), veh/h	2068	0	0	2419	0	0	303	0	1519	400	0	1453
HCM Platoon Ratio	1.00	1.00	1.00	1.00	1.00	1.00	1.00	1.00	1.00	1.00	1.00	1.00
Upstream Filter(I)	1.00	0.00	0.00	1.00	0.00	0.00	1.00	0.00	1.00	1.00	0.00	1.00
Uniform Delay (d), s/veh	16.0	0.0	0.0	16.9	0.0	0.0	26.2	0.0	17.6	24.7	0.0	16.1
Incr Delay (d2), s/veh	1.1	0.0	0.0	1.4	0.0	0.0	1.6	0.0	4.3	0.9	0.0	3.5
Initial Q Delay(d3),s/veh	0.0	0.0	0.0	0.0	0.0	0.0	0.0	0.0	0.0	0.0	0.0	0.0
%ile BackOfQ(50%),veh/ln	3.5	0.0	0.0	4.5	0.0	0.0	0.2	0.0	2.9	0.5	0.0	2.6
Unsig. Movement Delay, s/veh												
LnGrp Delay(d),s/veh	17.1	0.0	0.0	18.2	0.0	0.0	27.8	0.0	21.9	25.6	0.0	19.6
LnGrp LOS	B	A	A	B	A	A	C	A	C	C	A	B
Approach Vol, veh/h		348			434			267			282	
Approach Delay, s/veh		17.1			18.2			22.2			20.5	
Approach LOS		B			B			C			C	

Timer - Assigned Phs	1	2		4	5	6		8
Phs Duration (G+Y+Rc), s	6.0	23.8		24.9	8.0	21.8		24.9
Change Period (Y+Rc), s	* 4.7	7.9		7.5	* 4.7	* 7.9		7.5
Max Green Setting (Gmax), s	* 9.3	47.1		73.5	* 12	* 45		73.5
Max Q Clear Time (g_c+I1), s	2.4	8.4		14.2	3.2	8.4		12.7
Green Ext Time (p_c), s	0.0	4.8		3.3	0.0	4.8		2.8

Intersection Summary	
HCM 6th Ctrl Delay	19.2
HCM 6th LOS	B

Notes

* HCM 6th computational engine requires equal clearance times for the phases crossing the barrier.

Intersection	
Int Delay, s/veh	2.5

Movement	EBL	EBT	EBR	WBL	WBT	WBR	NBL	NBT	NBR	SBL	SBT	SBR
Lane Configurations		↕			↕			↕			↕	
Traffic Vol, veh/h	14	179	0	0	251	35	0	0	0	32	0	34
Future Vol, veh/h	14	179	0	0	251	35	0	0	0	32	0	34
Conflicting Peds, #/hr	10	0	10	10	0	10	10	0	10	10	0	10
Sign Control	Free	Free	Free	Free	Free	Free	Stop	Stop	Stop	Stop	Stop	Stop
RT Channelized	-	-	None	-	-	None	-	-	None	-	-	None
Storage Length	-	-	-	-	-	-	-	-	-	-	-	-
Veh in Median Storage, #	-	0	-	-	0	-	-	0	-	-	0	-
Grade, %	-	0	-	-	0	-	-	0	-	-	0	-
Peak Hour Factor	75	75	92	92	77	77	92	92	92	57	92	57
Heavy Vehicles, %	2	2	2	2	2	2	2	2	2	2	2	2
Mvmt Flow	19	239	0	0	326	45	0	0	0	56	0	60

Major/Minor	Major1			Major2			Minor1			Minor2		
Conflicting Flow All	381	0	0	249	0	0	676	668	259	646	646	369
Stage 1	-	-	-	-	-	-	287	287	-	359	359	-
Stage 2	-	-	-	-	-	-	389	381	-	287	287	-
Critical Hdwy	4.12	-	-	4.12	-	-	7.12	6.52	6.22	7.12	6.52	6.22
Critical Hdwy Stg 1	-	-	-	-	-	-	6.12	5.52	-	6.12	5.52	-
Critical Hdwy Stg 2	-	-	-	-	-	-	6.12	5.52	-	6.12	5.52	-
Follow-up Hdwy	2.218	-	-	2.218	-	-	3.518	4.018	3.318	3.518	4.018	3.318
Pot Cap-1 Maneuver	1177	-	-	1317	-	-	367	379	780	385	390	677
Stage 1	-	-	-	-	-	-	720	674	-	659	627	-
Stage 2	-	-	-	-	-	-	635	613	-	720	674	-
Platoon blocked, %		-	-		-	-						
Mov Cap-1 Maneuver	1166	-	-	1304	-	-	323	364	765	372	375	664
Mov Cap-2 Maneuver	-	-	-	-	-	-	323	364	-	372	375	-
Stage 1	-	-	-	-	-	-	700	654	-	641	621	-
Stage 2	-	-	-	-	-	-	572	607	-	700	654	-

Approach	EB	WB	NB	SB
HCM Control Delay, s	0.6	0	0	14.8
HCM LOS			A	B

Minor Lane/Major Mvmt	NBLn1	EBL	EBT	EBR	WBL	WBT	WBR	SBLn1
Capacity (veh/h)	-	1166	-	-	1304	-	-	481
HCM Lane V/C Ratio	-	0.016	-	-	-	-	-	0.241
HCM Control Delay (s)	0	8.1	0	-	0	-	-	14.8
HCM Lane LOS	A	A	A	-	A	-	-	B
HCM 95th %tile Q(veh)	-	0	-	-	0	-	-	0.9

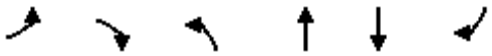

Movement	EBL	EBR	NBL	NBT	SBT	SBR
Lane Configurations						
Traffic Volume (veh/h)	56	157	235	481	191	49
Future Volume (veh/h)	56	157	235	481	191	49
Initial Q (Qb), veh	0	0	0	0	0	0
Ped-Bike Adj(A_pbT)	1.00	1.00	1.00			0.95
Parking Bus, Adj	1.00	1.00	1.00	1.00	1.00	1.00
Work Zone On Approach	No			No	No	
Adj Sat Flow, veh/h/ln	1870	1870	1870	1870	1870	1870
Adj Flow Rate, veh/h	68	191	287	587	236	60
Peak Hour Factor	0.82	0.82	0.82	0.82	0.81	0.81
Percent Heavy Veh, %	2	2	2	2	2	2
Cap, veh/h	262	572	381	1070	363	92
Arrive On Green	0.15	0.15	0.21	0.57	0.26	0.26
Sat Flow, veh/h	1781	1585	1781	1870	1420	361
Grp Volume(v), veh/h	68	191	287	587	0	296
Grp Sat Flow(s),veh/h/ln	1781	1585	1781	1870	0	1781
Q Serve(g_s), s	1.3	3.4	5.9	7.7	0.0	5.8
Cycle Q Clear(g_c), s	1.3	3.4	5.9	7.7	0.0	5.8
Prop In Lane	1.00	1.00	1.00			0.20
Lane Grp Cap(c), veh/h	262	572	381	1070	0	455
V/C Ratio(X)	0.26	0.33	0.75	0.55	0.00	0.65
Avail Cap(c_a), veh/h	911	1149	2550	5690	0	2687
HCM Platoon Ratio	1.00	1.00	1.00	1.00	1.00	1.00
Upstream Filter(I)	1.00	1.00	1.00	1.00	0.00	1.00
Uniform Delay (d), s/veh	14.8	9.1	14.4	5.2	0.0	13.0
Incr Delay (d2), s/veh	0.5	0.3	3.0	0.4	0.0	1.6
Initial Q Delay(d3),s/veh	0.0	0.0	0.0	0.0	0.0	0.0
%ile BackOfQ(50%),veh/ln	0.5	0.1	2.1	1.2	0.0	1.9
Unsig. Movement Delay, s/veh						
LnGrp Delay(d),s/veh	15.3	9.4	17.4	5.7	0.0	14.6
LnGrp LOS	B	A	B	A	A	B
Approach Vol, veh/h	259			874	296	
Approach Delay, s/veh	11.0			9.5	14.6	
Approach LOS	B			A	B	

Timer - Assigned Phs		2		4	5	6
Phs Duration (G+Y+Rc), s		28.4		10.7	12.4	16.0
Change Period (Y+Rc), s		6.0		5.0	4.0	6.0
Max Green Setting (Gmax), s		119.0		20.0	56.0	59.0
Max Q Clear Time (g_c+I1), s		9.7		5.4	7.9	7.8
Green Ext Time (p_c), s		4.1		0.7	0.8	1.8

Intersection Summary		
HCM 6th Ctrl Delay		10.8
HCM 6th LOS		B



Movement	WBL	WBR	NBT	NBR	SBL	SBT
Lane Configurations						
Traffic Volume (veh/h)	33	31	504	34	7	207
Future Volume (veh/h)	33	31	504	34	7	207
Initial Q (Qb), veh	0	0	0	0	0	0
Ped-Bike Adj(A_pbT)	1.00	1.00		0.96	1.00	
Parking Bus, Adj	1.00	1.00	1.00	1.00	1.00	1.00
Work Zone On Approach	No		No			No
Adj Sat Flow, veh/h/ln	1870	1870	1870	1870	1870	1870
Adj Flow Rate, veh/h	49	46	622	42	9	252
Peak Hour Factor	0.67	0.67	0.81	0.81	0.82	0.82
Percent Heavy Veh, %	2	2	2	2	2	2
Cap, veh/h	152	154	838	57	21	1138
Arrive On Green	0.09	0.09	0.49	0.49	0.01	0.61
Sat Flow, veh/h	1781	1585	1727	117	1781	1870
Grp Volume(v), veh/h	49	46	0	664	9	252
Grp Sat Flow(s),veh/h/ln	1781	1585	0	1844	1781	1870
Q Serve(g_s), s	0.9	1.0	0.0	10.4	0.2	2.2
Cycle Q Clear(g_c), s	0.9	1.0	0.0	10.4	0.2	2.2
Prop In Lane	1.00	1.00		0.06	1.00	
Lane Grp Cap(c), veh/h	152	154	0	895	21	1138
V/C Ratio(X)	0.32	0.30	0.00	0.74	0.42	0.22
Avail Cap(c_a), veh/h	744	681	0	5648	496	6457
HCM Platoon Ratio	1.00	1.00	1.00	1.00	1.00	1.00
Upstream Filter(I)	1.00	1.00	0.00	1.00	1.00	1.00
Uniform Delay (d), s/veh	15.5	15.1	0.0	7.4	17.6	3.2
Incr Delay (d2), s/veh	1.2	1.1	0.0	1.2	12.7	0.1
Initial Q Delay(d3),s/veh	0.0	0.0	0.0	0.0	0.0	0.0
%ile BackOfQ(50%),veh/ln	0.4	0.3	0.0	2.2	0.1	0.2
Unsig. Movement Delay, s/veh						
LnGrp Delay(d),s/veh	16.7	16.1	0.0	8.7	30.4	3.3
LnGrp LOS	B	B	A	A	C	A
Approach Vol, veh/h	95		664			261
Approach Delay, s/veh	16.4		8.7			4.2
Approach LOS	B		A			A

Timer - Assigned Phs	1	2				6	8
Phs Duration (G+Y+Rc), s	4.4	23.4				27.9	8.1
Change Period (Y+Rc), s	4.0	6.0				6.0	5.0
Max Green Setting (Gmax), s	10.0	110.0				124.0	15.0
Max Q Clear Time (g_c+I1), s	2.2	12.4				4.2	3.0
Green Ext Time (p_c), s	0.0	5.0				1.5	0.2

Intersection Summary	
HCM 6th Ctrl Delay	8.3
HCM 6th LOS	A



Movement	EBL	EBT	EBR	WBL	WBT	WBR	NBL	NBT	NBR	SBL	SBT	SBR
Lane Configurations												
Traffic Volume (veh/h)	1	37	2	21	58	118	4	21	40	15	4	3
Future Volume (veh/h)	1	37	2	21	58	118	4	21	40	15	4	3
Initial Q (Qb), veh	0	0	0	0	0	0	0	0	0	0	0	0
Ped-Bike Adj(A_pbT)	1.00		0.87	1.00		0.92	0.99		0.98	1.00		0.96
Parking Bus, Adj	1.00	1.00	1.00	1.00	1.00	1.00	1.00	1.00	1.00	1.00	1.00	1.00
Work Zone On Approach		No			No			No			No	
Adj Sat Flow, veh/h/ln	1870	1870	1870	1870	1870	1870	1870	1870	1870	1870	1870	1870
Adj Flow Rate, veh/h	2	69	4	26	72	146	5	29	55	22	6	4
Peak Hour Factor	0.54	0.54	0.54	0.81	0.81	0.81	0.73	0.73	0.73	0.69	0.69	0.69
Percent Heavy Veh, %	2	2	2	2	2	2	2	2	2	2	2	2
Cap, veh/h	4	131	8	69	192	206	70	331	574	836	582	388
Arrive On Green	0.08	0.08	0.08	0.14	0.14	0.14	0.56	0.56	0.56	0.56	0.56	0.56
Sat Flow, veh/h	49	1687	98	490	1356	1458	43	586	1018	1308	1030	687
Grp Volume(v), veh/h	75	0	0	98	0	146	89	0	0	22	0	10
Grp Sat Flow(s),veh/h/ln	1833	0	0	1846	0	1458	1647	0	0	1308	0	1717
Q Serve(g_s), s	3.3	0.0	0.0	4.0	0.0	8.0	0.0	0.0	0.0	0.0	0.0	0.2
Cycle Q Clear(g_c), s	3.3	0.0	0.0	4.0	0.0	8.0	2.1	0.0	0.0	0.5	0.0	0.2
Prop In Lane	0.03		0.05	0.27		1.00	0.06		0.62	1.00		0.40
Lane Grp Cap(c), veh/h	143	0	0	261	0	206	975	0	0	836	0	969
V/C Ratio(X)	0.53	0.00	0.00	0.38	0.00	0.71	0.09	0.00	0.00	0.03	0.00	0.01
Avail Cap(c_a), veh/h	793	0	0	1086	0	858	975	0	0	836	0	969
HCM Platoon Ratio	1.00	1.00	1.00	1.00	1.00	1.00	1.00	1.00	1.00	1.00	1.00	1.00
Upstream Filter(I)	1.00	0.00	0.00	1.00	0.00	1.00	1.00	0.00	0.00	1.00	0.00	1.00
Uniform Delay (d), s/veh	36.9	0.0	0.0	32.4	0.0	34.1	8.3	0.0	0.0	8.0	0.0	7.9
Incr Delay (d2), s/veh	1.1	0.0	0.0	0.3	0.0	1.7	0.2	0.0	0.0	0.1	0.0	0.0
Initial Q Delay(d3),s/veh	0.0	0.0	0.0	0.0	0.0	0.0	0.0	0.0	0.0	0.0	0.0	0.0
%ile BackOfQ(50%),veh/ln	1.5	0.0	0.0	1.7	0.0	2.8	0.7	0.0	0.0	0.2	0.0	0.1
Unsig. Movement Delay, s/veh												
LnGrp Delay(d),s/veh	38.0	0.0	0.0	32.7	0.0	35.8	8.5	0.0	0.0	8.1	0.0	8.0
LnGrp LOS	D	A	A	C	A	D	A	A	A	A	A	A
Approach Vol, veh/h		75			244			89			32	
Approach Delay, s/veh		38.0			34.5			8.5			8.0	
Approach LOS		D			C			A			A	

Timer - Assigned Phs	2	4	6	8
Phs Duration (G+Y+Rc), s	53.0	12.5	53.0	17.8
Change Period (Y+Rc), s	6.0	6.0	6.0	6.0
Max Green Setting (Gmax), s	47.0	36.0	47.0	49.0
Max Q Clear Time (g_c+I1), s	4.1	5.3	2.5	10.0
Green Ext Time (p_c), s	0.1	0.2	0.2	0.6

Intersection Summary	
HCM 6th Ctrl Delay	27.9
HCM 6th LOS	C



Movement	EBL	EBT	EBR	WBL	WBT	WBR	NBL	NBT	NBR	SBL	SBT	SBR
Lane Configurations												
Traffic Volume (veh/h)	50	16	30	1	43	27	123	1191	19	20	961	34
Future Volume (veh/h)	50	16	30	1	43	27	123	1191	19	20	961	34
Initial Q (Qb), veh	0	0	0	0	0	0	0	0	0	0	0	0
Ped-Bike Adj(A_pbT)	1.00		0.94	1.00		0.96	1.00		0.96	1.00		0.98
Parking Bus, Adj	1.00	1.00	1.00	1.00	1.00	1.00	1.00	1.00	1.00	1.00	1.00	1.00
Work Zone On Approach		No			No			No			No	
Adj Sat Flow, veh/h/ln	1870	1870	1870	1870	1870	1870	1870	1870	1870	1870	1870	1870
Adj Flow Rate, veh/h	64	21	38	1	55	35	154	1489	24	26	1264	45
Peak Hour Factor	0.78	0.78	0.78	0.78	0.78	0.78	0.80	0.80	0.80	0.76	0.76	0.76
Percent Heavy Veh, %	2	2	2	2	2	2	2	2	2	2	2	2
Cap, veh/h	131	448	862	5	316	257	285	1727	28	86	1594	810
Arrive On Green	0.07	0.24	0.24	0.00	0.17	0.17	0.08	0.48	0.48	0.05	0.45	0.45
Sat Flow, veh/h	1781	1870	2635	1781	1870	1518	3456	3577	58	1781	3554	1548
Grp Volume(v), veh/h	64	21	38	1	55	35	154	739	774	26	1264	45
Grp Sat Flow(s),veh/h/ln	1781	1870	1317	1781	1870	1518	1728	1777	1857	1781	1777	1548
Q Serve(g_s), s	4.2	1.0	1.2	0.1	3.0	2.4	5.2	44.4	44.5	1.7	36.7	1.7
Cycle Q Clear(g_c), s	4.2	1.0	1.2	0.1	3.0	2.4	5.2	44.4	44.5	1.7	36.7	1.7
Prop In Lane	1.00		1.00	1.00		1.00	1.00		0.03	1.00		1.00
Lane Grp Cap(c), veh/h	131	448	862	5	316	257	285	858	897	86	1594	810
V/C Ratio(X)	0.49	0.05	0.04	0.21	0.17	0.14	0.54	0.86	0.86	0.30	0.79	0.06
Avail Cap(c_a), veh/h	148	714	1237	148	714	580	287	858	897	148	1673	845
HCM Platoon Ratio	1.00	1.00	1.00	1.00	1.00	1.00	1.00	1.00	1.00	1.00	1.00	1.00
Upstream Filter(I)	1.00	1.00	1.00	1.00	1.00	1.00	1.00	1.00	1.00	1.00	1.00	1.00
Uniform Delay (d), s/veh	53.6	35.2	28.1	59.9	42.8	42.6	53.0	27.6	27.6	55.4	28.4	14.2
Incr Delay (d2), s/veh	1.1	0.1	0.0	7.5	0.6	0.5	1.1	11.1	10.8	0.7	4.1	0.1
Initial Q Delay(d3),s/veh	0.0	0.0	0.0	0.0	0.0	0.0	0.0	0.0	0.0	0.0	0.0	0.0
%ile BackOfQ(50%),veh/ln	1.9	0.5	0.4	0.0	1.5	0.9	2.2	19.5	20.3	0.8	15.1	0.6
Unsig. Movement Delay, s/veh												
LnGrp Delay(d),s/veh	54.7	35.3	28.1	67.4	43.4	43.1	54.1	38.7	38.4	56.1	32.6	14.3
LnGrp LOS	D	D	C	E	D	D	D	D	D	E	C	B
Approach Vol, veh/h		123			91			1667			1335	
Approach Delay, s/veh		43.2			43.5			40.0			32.4	
Approach LOS		D			D			D			C	

Timer - Assigned Phs	1	2	3	4	5	6	7	8
Phs Duration (G+Y+Rc), s	11.5	66.5	6.0	36.4	15.6	62.4	14.5	27.9
Change Period (Y+Rc), s	* 5.7	* 8.4	* 5.7	7.5	* 5.7	* 8.4	* 5.7	7.5
Max Green Setting (Gmax), s	* 6	* 57	* 10	46.0	* 10	* 57	* 10	46.0
Max Q Clear Time (g_c+I1), s	10.7	46.5	2.1	3.2	7.2	38.7	6.2	5.0
Green Ext Time (p_c), s	0.0	9.6	0.0	0.5	0.1	15.3	0.0	0.8

Intersection Summary	
HCM 6th Ctrl Delay	37.1
HCM 6th LOS	D

Notes

* HCM 6th computational engine requires equal clearance times for the phases crossing the barrier.

Intersection	
Int Delay, s/veh	2.4

Movement	EBL	EBR	NBL	NBT	SBT	SBR
Lane Configurations						
Traffic Vol, veh/h	57	51	19	716	329	18
Future Vol, veh/h	57	51	19	716	329	18
Conflicting Peds, #/hr	10	10	10	0	0	10
Sign Control	Stop	Stop	Free	Free	Free	Free
RT Channelized	-	None	-	None	-	None
Storage Length	0	-	410	-	-	80
Veh in Median Storage, #	0	-	-	0	0	-
Grade, %	0	-	-	0	0	-
Peak Hour Factor	92	92	92	92	92	92
Heavy Vehicles, %	2	2	2	2	2	2
Mvmt Flow	62	55	21	778	358	20

Major/Minor	Minor2		Major1		Major2	
Conflicting Flow All	1198	378	388	0	-	0
Stage 1	368	-	-	-	-	-
Stage 2	830	-	-	-	-	-
Critical Hdwy	6.42	6.22	4.12	-	-	-
Critical Hdwy Stg 1	5.42	-	-	-	-	-
Critical Hdwy Stg 2	5.42	-	-	-	-	-
Follow-up Hdwy	3.518	3.318	2.218	-	-	-
Pot Cap-1 Maneuver	205	669	1170	-	-	-
Stage 1	700	-	-	-	-	-
Stage 2	428	-	-	-	-	-
Platoon blocked, %				-	-	-
Mov Cap-1 Maneuver	197	656	1159	-	-	-
Mov Cap-2 Maneuver	197	-	-	-	-	-
Stage 1	680	-	-	-	-	-
Stage 2	424	-	-	-	-	-

Approach	EB	NB	SB
HCM Control Delay, s	25.2	0.2	0
HCM LOS	D		

Minor Lane/Major Mvmt	NBL	NBT	EBLn1	SBT	SBR
Capacity (veh/h)	1159	-	294	-	-
HCM Lane V/C Ratio	0.018	-	0.399	-	-
HCM Control Delay (s)	8.2	-	25.2	-	-
HCM Lane LOS	A	-	D	-	-
HCM 95th %tile Q(veh)	0.1	-	1.8	-	-

Movement	EBL	EBT	EBR	WBL	WBT	WBR	NBL	NBT	NBR	SBL	SBT	SBR
Lane Configurations												
Traffic Volume (veh/h)	113	99	102	202	73	250	39	306	35	136	159	36
Future Volume (veh/h)	113	99	102	202	73	250	39	306	35	136	159	36
Initial Q (Qb), veh	0	0	0	0	0	0	0	0	0	0	0	0
Ped-Bike Adj(A_pbT)	1.00		0.97	1.00		0.95	1.00		0.97	1.00		0.97
Parking Bus, Adj	1.00	1.00	1.00	1.00	1.00	1.00	1.00	1.00	1.00	1.00	1.00	1.00
Work Zone On Approach		No			No			No			No	
Adj Sat Flow, veh/h/ln	1870	1870	1870	1870	1870	1870	1870	1870	1870	1870	1870	1870
Adj Flow Rate, veh/h	155	136	140	262	95	325	46	360	41	162	189	43
Peak Hour Factor	0.73	0.73	0.73	0.77	0.77	0.77	0.85	0.85	0.85	0.84	0.84	0.84
Percent Heavy Veh, %	2	2	2	2	2	2	2	2	2	2	2	2
Cap, veh/h	226	431	353	303	512	412	167	444	51	206	840	186
Arrive On Green	0.13	0.23	0.23	0.17	0.27	0.27	0.09	0.27	0.27	0.12	0.29	0.29
Sat Flow, veh/h	1781	1870	1531	1781	1870	1504	1781	1643	187	1781	2873	636
Grp Volume(v), veh/h	155	136	140	262	95	325	46	0	401	162	115	117
Grp Sat Flow(s),veh/h/ln	1781	1870	1531	1781	1870	1504	1781	0	1830	1781	1777	1733
Q Serve(g_s), s	7.0	5.1	6.5	12.1	3.3	16.9	2.0	0.0	17.3	7.5	4.1	4.3
Cycle Q Clear(g_c), s	7.0	5.1	6.5	12.1	3.3	16.9	2.0	0.0	17.3	7.5	4.1	4.3
Prop In Lane	1.00		1.00	1.00		1.00	1.00		0.10	1.00		0.37
Lane Grp Cap(c), veh/h	226	431	353	303	512	412	167	0	495	206	519	507
V/C Ratio(X)	0.69	0.32	0.40	0.86	0.19	0.79	0.28	0.00	0.81	0.79	0.22	0.23
Avail Cap(c_a), veh/h	380	510	417	549	687	552	253	0	780	359	863	842
HCM Platoon Ratio	1.00	1.00	1.00	1.00	1.00	1.00	1.00	1.00	1.00	1.00	1.00	1.00
Upstream Filter(I)	1.00	1.00	1.00	1.00	1.00	1.00	1.00	0.00	1.00	1.00	1.00	1.00
Uniform Delay (d), s/veh	35.2	26.9	27.5	34.1	23.5	28.4	35.6	0.0	28.8	36.3	22.6	22.7
Incr Delay (d2), s/veh	1.4	0.6	1.0	2.9	0.2	6.6	0.3	0.0	4.8	2.5	0.3	0.3
Initial Q Delay(d3),s/veh	0.0	0.0	0.0	0.0	0.0	0.0	0.0	0.0	0.0	0.0	0.0	0.0
%ile BackOfQ(50%),veh/ln	3.1	2.3	2.4	5.3	1.4	6.6	0.9	0.0	7.7	3.3	1.7	1.7
Unsig. Movement Delay, s/veh												
LnGrp Delay(d),s/veh	36.6	27.5	28.5	37.0	23.7	35.0	35.9	0.0	33.6	38.8	22.9	23.0
LnGrp LOS	D	C	C	D	C	C	D	A	C	D	C	C
Approach Vol, veh/h		431			682			447			394	
Approach Delay, s/veh		31.1			34.2			33.8			29.5	
Approach LOS		C			C			C			C	

Timer - Assigned Phs	1	2	3	4	5	6	7	8
Phs Duration (G+Y+Rc), s	13.8	28.8	18.4	23.5	11.9	30.7	14.7	27.1
Change Period (Y+Rc), s	4.0	6.0	4.0	4.0	4.0	6.0	4.0	4.0
Max Green Setting (Gmax), s	17.0	36.0	26.0	23.0	12.0	41.0	18.0	31.0
Max Q Clear Time (g_c+I1), s	9.5	19.3	14.1	8.5	4.0	6.3	9.0	18.9
Green Ext Time (p_c), s	0.1	2.9	0.3	1.5	0.0	2.0	0.1	2.1

Intersection Summary	
HCM 6th Ctrl Delay	32.5
HCM 6th LOS	C

Intersection	
Intersection Delay, s/veh	44.3
Intersection LOS	E

Movement	EBL	EBT	EBR	WBL	WBT	WBR	NBL	NBT	NBR	SBL	SBT	SBR
Lane Configurations												
Traffic Vol, veh/h	11	124	103	30	199	142	135	140	14	216	135	64
Future Vol, veh/h	11	124	103	30	199	142	135	140	14	216	135	64
Peak Hour Factor	0.77	0.77	0.77	0.83	0.83	0.83	0.85	0.85	0.85	0.83	0.83	0.83
Heavy Vehicles, %	2	2	2	2	2	2	2	2	2	2	2	2
Mvmt Flow	14	161	134	36	240	171	159	165	16	260	163	77
Number of Lanes	0	1	1	0	1	1	0	1	0	0	1	0

Approach	EB	WB	NB	SB
Opposing Approach	WB	EB	SB	NB
Opposing Lanes	2	2	1	1
Conflicting Approach Left	SB	NB	EB	WB
Conflicting Lanes Left	1	1	2	2
Conflicting Approach Right	NB	SB	WB	EB
Conflicting Lanes Right	1	1	2	2
HCM Control Delay	17	22.4	33.5	88.1
HCM LOS	C	C	D	F

Lane	NBLn1	EBLn1	EBLn2	WBLn1	WBLn2	SBLn1
Vol Left, %	47%	8%	0%	13%	0%	52%
Vol Thru, %	48%	92%	0%	87%	0%	33%
Vol Right, %	5%	0%	100%	0%	100%	15%
Sign Control	Stop	Stop	Stop	Stop	Stop	Stop
Traffic Vol by Lane	289	135	103	229	142	415
LT Vol	135	11	0	30	0	216
Through Vol	140	124	0	199	0	135
RT Vol	14	0	103	0	142	64
Lane Flow Rate	340	175	134	276	171	500
Geometry Grp	2	7	7	7	7	2
Degree of Util (X)	0.761	0.429	0.3	0.651	0.367	1.065
Departure Headway (Hd)	8.389	9.224	8.448	8.884	8.084	7.666
Convergence, Y/N	Yes	Yes	Yes	Yes	Yes	Yes
Cap	435	393	428	408	448	470
Service Time	6.389	6.924	6.148	6.584	5.784	5.753
HCM Lane V/C Ratio	0.782	0.445	0.313	0.676	0.382	1.064
HCM Control Delay	33.5	18.7	14.7	26.7	15.4	88.1
HCM Lane LOS	D	C	B	D	C	F
HCM 95th-tile Q	6.4	2.1	1.2	4.5	1.7	15.6

Intersection	
Int Delay, s/veh	1.9

Movement	EBL	EBT	EBR	WBL	WBT	WBR	NBL	NBT	NBR	SBL	SBT	SBR
Lane Configurations		↕			↕			↕			↕	
Traffic Vol, veh/h	2	232	12	4	232	1	23	2	7	3	2	2
Future Vol, veh/h	2	232	12	4	232	1	23	2	7	3	2	2
Conflicting Peds, #/hr	10	0	10	10	0	10	10	0	10	10	0	10
Sign Control	Free	Free	Free	Free	Free	Free	Stop	Stop	Stop	Stop	Stop	Stop
RT Channelized	-	-	None	-	-	None	-	-	None	-	-	None
Storage Length	-	-	-	-	-	-	-	-	-	-	-	-
Veh in Median Storage, #	-	0	-	-	0	-	-	0	-	-	0	-
Grade, %	-	0	-	-	0	-	-	0	-	-	0	-
Peak Hour Factor	88	88	88	80	80	80	58	58	58	25	25	25
Heavy Vehicles, %	2	2	2	2	2	2	2	2	2	2	2	2
Mvmt Flow	2	264	14	5	290	1	40	3	12	12	8	8

Major/Minor	Major1			Major2			Minor1			Minor2		
Conflicting Flow All	301	0	0	288	0	0	604	596	291	604	603	311
Stage 1	-	-	-	-	-	-	285	285	-	311	311	-
Stage 2	-	-	-	-	-	-	319	311	-	293	292	-
Critical Hdwy	4.12	-	-	4.12	-	-	7.12	6.52	6.22	7.12	6.52	6.22
Critical Hdwy Stg 1	-	-	-	-	-	-	6.12	5.52	-	6.12	5.52	-
Critical Hdwy Stg 2	-	-	-	-	-	-	6.12	5.52	-	6.12	5.52	-
Follow-up Hdwy	2.218	-	-	2.218	-	-	3.518	4.018	3.318	3.518	4.018	3.318
Pot Cap-1 Maneuver	1260	-	-	1274	-	-	410	417	748	410	413	729
Stage 1	-	-	-	-	-	-	722	676	-	699	658	-
Stage 2	-	-	-	-	-	-	693	658	-	715	671	-
Platoon blocked, %		-	-		-	-						
Mov Cap-1 Maneuver	1248	-	-	1262	-	-	390	406	734	391	402	715
Mov Cap-2 Maneuver	-	-	-	-	-	-	390	406	-	391	402	-
Stage 1	-	-	-	-	-	-	713	668	-	691	648	-
Stage 2	-	-	-	-	-	-	667	648	-	692	663	-

Approach	EB	WB	NB	SB
HCM Control Delay, s	0.1	0.1	14.4	13.5
HCM LOS			B	B

Minor Lane/Major Mvmt	NBLn1	EBL	EBT	EBR	WBL	WBT	WBR	SBLn1
Capacity (veh/h)	436	1248	-	-	1262	-	-	453
HCM Lane V/C Ratio	0.127	0.002	-	-	0.004	-	-	0.062
HCM Control Delay (s)	14.4	7.9	0	-	7.9	0	-	13.5
HCM Lane LOS	B	A	A	-	A	A	-	B
HCM 95th %tile Q(veh)	0.4	0	-	-	0	-	-	0.2

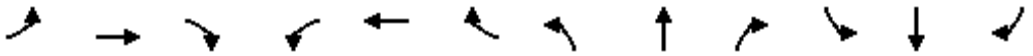

Movement	EBL	EBT	EBR	WBL	WBT	WBR	NBL	NBT	NBR	SBL	SBT	SBR
Lane Configurations												
Traffic Volume (veh/h)	68	118	98	68	144	93	118	633	63	77	772	47
Future Volume (veh/h)	68	118	98	68	144	93	118	633	63	77	772	47
Initial Q (Qb), veh	0	0	0	0	0	0	0	0	0	0	0	0
Ped-Bike Adj(A_pbT)	1.00		0.95	1.00		0.96	1.00		0.96	1.00		0.96
Parking Bus, Adj	1.00	1.00	1.00	1.00	1.00	1.00	1.00	1.00	1.00	1.00	1.00	1.00
Work Zone On Approach		No			No			No			No	
Adj Sat Flow, veh/h/ln	1870	1870	1870	1870	1870	1870	1870	1870	1870	1870	1870	1870
Adj Flow Rate, veh/h	74	128	107	86	182	118	123	659	66	84	839	51
Peak Hour Factor	0.92	0.92	0.92	0.79	0.79	0.79	0.96	0.96	0.96	0.92	0.92	0.92
Percent Heavy Veh, %	2	2	2	2	2	2	2	2	2	2	2	2
Cap, veh/h	94	281	227	108	295	239	149	1758	176	106	1755	107
Arrive On Green	0.05	0.15	0.15	0.06	0.16	0.16	0.08	0.54	0.54	0.06	0.52	0.52
Sat Flow, veh/h	1781	1870	1512	1781	1870	1515	1781	3249	325	1781	3395	206
Grp Volume(v), veh/h	74	128	107	86	182	118	123	360	365	84	439	451
Grp Sat Flow(s),veh/h/ln	1781	1870	1512	1781	1870	1515	1781	1777	1798	1781	1777	1824
Q Serve(g_s), s	4.9	7.5	7.8	5.7	10.9	8.5	8.2	14.0	14.0	5.6	19.0	19.0
Cycle Q Clear(g_c), s	4.9	7.5	7.8	5.7	10.9	8.5	8.2	14.0	14.0	5.6	19.0	19.0
Prop In Lane	1.00		1.00	1.00		1.00	1.00		0.18	1.00		0.11
Lane Grp Cap(c), veh/h	94	281	227	108	295	239	149	962	973	106	919	943
V/C Ratio(X)	0.78	0.46	0.47	0.79	0.62	0.49	0.83	0.37	0.38	0.79	0.48	0.48
Avail Cap(c_a), veh/h	154	500	405	169	516	418	214	962	973	181	919	943
HCM Platoon Ratio	1.00	1.00	1.00	1.00	1.00	1.00	1.00	1.00	1.00	1.00	1.00	1.00
Upstream Filter(I)	1.00	1.00	1.00	0.82	0.82	0.82	0.91	0.91	0.91	1.00	1.00	1.00
Uniform Delay (d), s/veh	56.1	46.5	46.6	55.6	47.1	46.1	54.1	15.8	15.9	55.7	18.6	18.6
Incr Delay (d2), s/veh	5.3	0.4	0.6	4.7	0.6	0.5	10.1	1.0	1.0	4.9	1.8	1.7
Initial Q Delay(d3),s/veh	0.0	0.0	0.0	0.0	0.0	0.0	0.0	0.0	0.0	0.0	0.0	0.0
%ile BackOfQ(50%),veh/ln	2.3	3.5	2.9	2.7	5.1	3.2	4.1	5.9	6.0	2.7	8.2	8.4
Unsig. Movement Delay, s/veh												
LnGrp Delay(d),s/veh	61.4	47.0	47.2	60.3	47.8	46.6	64.2	16.9	16.9	60.6	20.4	20.3
LnGrp LOS	E	D	D	E	D	D	E	B	B	E	C	C
Approach Vol, veh/h		309			386			848			974	
Approach Delay, s/veh		50.5			50.2			23.7			23.8	
Approach LOS		D			D			C			C	

Timer - Assigned Phs	1	2	3	4	5	6	7	8
Phs Duration (G+Y+Rc), s	12.8	70.6	12.9	23.7	15.6	67.7	12.0	24.7
Change Period (Y+Rc), s	5.6	5.7	5.6	5.7	5.6	5.7	5.6	5.7
Max Green Setting (Gmax), s	12.2	41.7	11.4	32.1	14.4	39.5	10.4	33.1
Max Q Clear Time (g_c+I1), s	7.6	16.0	7.7	9.8	10.2	21.0	6.9	12.9
Green Ext Time (p_c), s	0.0	3.1	0.0	0.6	0.1	3.7	0.0	0.8

Intersection Summary	
HCM 6th Ctrl Delay	31.1
HCM 6th LOS	C



Movement	EBL	EBT	EBR	WBL	WBT	WBR	NBL	NBT	NBR	SBL	SBT	SBR
Lane Configurations												
Traffic Volume (veh/h)	37	172	78	22	156	23	84	391	26	54	566	50
Future Volume (veh/h)	37	172	78	22	156	23	84	391	26	54	566	50
Initial Q (Qb), veh	0	0	0	0	0	0	0	0	0	0	0	0
Ped-Bike Adj(A_pbT)	1.00		0.97	0.99		0.97	1.00		0.96	1.00		0.95
Parking Bus, Adj	1.00	1.00	1.00	1.00	1.00	1.00	1.00	1.00	1.00	1.00	1.00	1.00
Work Zone On Approach		No			No			No			No	
Adj Sat Flow, veh/h/ln	1870	1870	1870	1870	1870	1870	1870	1870	1870	1870	1870	1870
Adj Flow Rate, veh/h	45	210	95	30	211	31	98	455	30	71	745	66
Peak Hour Factor	0.82	0.82	0.82	0.74	0.74	0.74	0.86	0.86	0.86	0.76	0.76	0.76
Percent Heavy Veh, %	2	2	2	2	2	2	2	2	2	2	2	2
Cap, veh/h	157	456	206	92	326	45	128	1177	77	104	1102	98
Arrive On Green	0.09	0.38	0.38	0.23	0.23	0.23	0.07	0.35	0.35	0.06	0.34	0.34
Sat Flow, veh/h	1781	1208	547	107	1440	199	1781	3374	222	1781	3287	291
Grp Volume(v), veh/h	45	0	305	272	0	0	98	239	246	71	402	409
Grp Sat Flow(s),veh/h/ln	1781	0	1755	1746	0	0	1781	1777	1818	1781	1777	1802
Q Serve(g_s), s	1.4	0.0	7.7	2.5	0.0	0.0	3.2	6.0	6.0	2.3	11.5	11.5
Cycle Q Clear(g_c), s	1.4	0.0	7.7	8.2	0.0	0.0	3.2	6.0	6.0	2.3	11.5	11.5
Prop In Lane	1.00		0.31	0.11		0.11	1.00		0.12	1.00		0.16
Lane Grp Cap(c), veh/h	157	0	663	463	0	0	128	620	634	104	595	604
V/C Ratio(X)	0.29	0.00	0.46	0.59	0.00	0.00	0.76	0.39	0.39	0.68	0.68	0.68
Avail Cap(c_a), veh/h	341	0	1442	1039	0	0	432	1430	1464	341	1340	1359
HCM Platoon Ratio	1.00	1.00	1.00	1.00	1.00	1.00	1.00	1.00	1.00	1.00	1.00	1.00
Upstream Filter(I)	1.00	0.00	1.00	1.00	0.00	0.00	1.00	1.00	1.00	1.00	1.00	1.00
Uniform Delay (d), s/veh	25.2	0.0	13.8	20.8	0.0	0.0	26.9	14.5	14.5	27.3	16.9	16.9
Incr Delay (d2), s/veh	1.0	0.0	0.5	1.2	0.0	0.0	9.0	0.4	0.4	7.7	1.4	1.3
Initial Q Delay(d3),s/veh	0.0	0.0	0.0	0.0	0.0	0.0	0.0	0.0	0.0	0.0	0.0	0.0
%ile BackOfQ(50%),veh/ln	0.6	0.0	2.7	3.2	0.0	0.0	1.6	2.2	2.3	1.1	4.4	4.5
Unsig. Movement Delay, s/veh												
LnGrp Delay(d),s/veh	26.1	0.0	14.3	22.0	0.0	0.0	35.9	14.8	14.9	34.9	18.2	18.2
LnGrp LOS	C	A	B	C	A	A	D	B	B	C	B	B
Approach Vol, veh/h		350			272			583			882	
Approach Delay, s/veh		15.8			22.0			18.4			19.6	
Approach LOS		B			C			B			B	

Timer - Assigned Phs	1	2		4	5	6	7	8
Phs Duration (G+Y+Rc), s	7.1	25.1		26.8	8.0	24.3	8.9	17.9
Change Period (Y+Rc), s	3.7	4.5		4.5	3.7	4.5	3.7	4.5
Max Green Setting (Gmax), s	11.3	47.5		48.5	14.3	44.5	11.3	33.5
Max Q Clear Time (g_c+I1), s	14.3	8.0		9.7	5.2	13.5	3.4	10.2
Green Ext Time (p_c), s	0.1	3.2		2.0	0.1	5.9	0.0	1.6

Intersection Summary		
HCM 6th Ctrl Delay		18.9
HCM 6th LOS		B



Movement	EBL	EBT	EBR	WBL	WBT	WBR	NBL	NBT	NBR	SBL	SBT	SBR
Lane Configurations												
Traffic Volume (veh/h)	36	130	66	124	122	170	30	602	82	96	732	29
Future Volume (veh/h)	36	130	66	124	122	170	30	602	82	96	732	29
Initial Q (Qb), veh	0	0	0	0	0	0	0	0	0	0	0	0
Ped-Bike Adj(A_pbT)	1.00		0.96	1.00		0.96	1.00		0.95	1.00		0.96
Parking Bus, Adj	1.00	1.00	1.00	1.00	1.00	1.00	1.00	1.00	1.00	1.00	1.00	1.00
Work Zone On Approach		No			No			No			No	
Adj Sat Flow, veh/h/ln	1870	1870	1870	1870	1870	1870	1870	1870	1870	1870	1870	1870
Adj Flow Rate, veh/h	39	140	71	129	127	177	38	762	104	109	832	33
Peak Hour Factor	0.93	0.93	0.93	0.96	0.96	0.96	0.79	0.79	0.79	0.88	0.88	0.88
Percent Heavy Veh, %	2	2	2	2	2	2	2	2	2	2	2	2
Cap, veh/h	52	187	95	178	175	295	67	1012	138	135	1260	50
Arrive On Green	0.19	0.19	0.19	0.19	0.19	0.19	0.04	0.32	0.32	0.08	0.36	0.36
Sat Flow, veh/h	272	977	495	919	905	1524	1781	3120	426	1781	3477	138
Grp Volume(v), veh/h	250	0	0	256	0	177	38	434	432	109	425	440
Grp Sat Flow(s),veh/h/ln	1744	0	0	1824	0	1524	1781	1777	1769	1781	1777	1838
Q Serve(g_s), s	14.7	0.0	0.0	14.3	0.0	11.5	2.3	23.6	23.6	6.5	21.7	21.7
Cycle Q Clear(g_c), s	14.7	0.0	0.0	14.3	0.0	11.5	2.3	23.6	23.6	6.5	21.7	21.7
Prop In Lane	0.16		0.28	0.50		1.00	1.00		0.24	1.00		0.08
Lane Grp Cap(c), veh/h	334	0	0	353	0	295	67	576	574	135	644	666
V/C Ratio(X)	0.75	0.00	0.00	0.73	0.00	0.60	0.57	0.75	0.75	0.81	0.66	0.66
Avail Cap(c_a), veh/h	596	0	0	624	0	521	100	680	677	186	765	791
HCM Platoon Ratio	1.00	1.00	1.00	1.00	1.00	1.00	1.00	1.00	1.00	1.00	1.00	1.00
Upstream Filter(I)	1.00	0.00	0.00	1.00	0.00	1.00	1.00	1.00	1.00	1.00	1.00	1.00
Uniform Delay (d), s/veh	41.3	0.0	0.0	41.0	0.0	39.8	51.2	32.7	32.7	49.2	28.9	28.9
Incr Delay (d2), s/veh	3.4	0.0	0.0	2.9	0.0	2.0	2.8	7.5	7.6	11.6	4.3	4.1
Initial Q Delay(d3),s/veh	0.0	0.0	0.0	0.0	0.0	0.0	0.0	0.0	0.0	0.0	0.0	0.0
%ile BackOfQ(50%),veh/ln	6.5	0.0	0.0	6.6	0.0	4.4	1.0	10.9	10.9	3.3	9.6	9.9
Unsig. Movement Delay, s/veh												
LnGrp Delay(d),s/veh	44.7	0.0	0.0	43.8	0.0	41.8	54.0	40.3	40.3	60.8	33.2	33.1
LnGrp LOS	D	A	A	D	A	D	D	D	D	E	C	C
Approach Vol, veh/h		250			433			904			974	
Approach Delay, s/veh		44.7			43.0			40.9			36.2	
Approach LOS		D			D			D			D	

Timer - Assigned Phs	1	2		4	5	6		8
Phs Duration (G+Y+Rc), s	9.8	44.6		27.0	13.9	40.5		26.8
Change Period (Y+Rc), s	* 5.7	5.4		6.1	* 5.7	5.4		6.1
Max Green Setting (Gmax), s	* 6.1	46.6		37.0	* 11	41.4		37.0
Max Q Clear Time (g_c+I1), s	4.3	23.7		16.3	8.5	25.6		16.7
Green Ext Time (p_c), s	0.0	12.1		2.0	0.0	9.4		1.4

Intersection Summary		
HCM 6th Ctrl Delay		39.8
HCM 6th LOS		D

Notes

* HCM 6th computational engine requires equal clearance times for the phases crossing the barrier.



Movement	EBL	EBT	EBR	WBL	WBT	WBR	NBL	NBT	NBR	SBL	SBT	SBR
Lane Configurations												
Traffic Volume (veh/h)	52	102	167	57	142	63	117	477	31	43	463	51
Future Volume (veh/h)	52	102	167	57	142	63	117	477	31	43	463	51
Initial Q (Qb), veh	0	0	0	0	0	0	0	0	0	0	0	0
Ped-Bike Adj(A_pbT)	1.00		0.92	1.00		0.95	1.00		0.96	1.00		0.95
Parking Bus, Adj	1.00	1.00	1.00	1.00	1.00	1.00	1.00	1.00	1.00	1.00	1.00	1.00
Work Zone On Approach		No			No			No			No	
Adj Sat Flow, veh/h/ln	1870	1870	1870	1870	1870	1870	1870	1870	1870	1870	1870	1870
Adj Flow Rate, veh/h	57	112	184	90	225	100	130	530	34	47	503	55
Peak Hour Factor	0.91	0.91	0.91	0.63	0.63	0.63	0.90	0.90	0.90	0.92	0.92	0.92
Percent Heavy Veh, %	2	2	2	2	2	2	2	2	2	2	2	2
Cap, veh/h	84	166	198	98	245	109	158	601	39	64	549	442
Arrive On Green	0.14	0.14	0.14	0.26	0.26	0.26	0.09	0.35	0.35	0.04	0.29	0.29
Sat Flow, veh/h	620	1219	1455	379	948	421	1781	1733	111	1781	1870	1507
Grp Volume(v), veh/h	169	0	184	415	0	0	130	0	564	47	503	55
Grp Sat Flow(s),veh/h/ln	1839	0	1455	1748	0	0	1781	0	1844	1781	1870	1507
Q Serve(g_s), s	9.1	0.0	13.0	24.0	0.0	0.0	7.4	0.0	29.9	2.7	27.0	2.8
Cycle Q Clear(g_c), s	9.1	0.0	13.0	24.0	0.0	0.0	7.4	0.0	29.9	2.7	27.0	2.8
Prop In Lane	0.34		1.00	0.22		0.24	1.00		0.06	1.00		1.00
Lane Grp Cap(c), veh/h	250	0	198	451	0	0	158	0	639	64	549	442
V/C Ratio(X)	0.68	0.00	0.93	0.92	0.00	0.00	0.82	0.00	0.88	0.74	0.92	0.12
Avail Cap(c_a), veh/h	250	0	198	524	0	0	196	0	814	100	725	584
HCM Platoon Ratio	1.00	1.00	1.00	1.00	1.00	1.00	1.00	1.00	1.00	1.00	1.00	1.00
Upstream Filter(I)	1.00	0.00	1.00	1.00	0.00	0.00	1.00	0.00	1.00	1.00	1.00	1.00
Uniform Delay (d), s/veh	42.7	0.0	44.4	37.5	0.0	0.0	46.5	0.0	31.9	49.5	35.4	26.9
Incr Delay (d2), s/veh	5.8	0.0	44.2	18.7	0.0	0.0	16.5	0.0	8.0	6.1	11.9	0.0
Initial Q Delay(d3),s/veh	0.0	0.0	0.0	0.0	0.0	0.0	0.0	0.0	0.0	0.0	0.0	0.0
%ile BackOfQ(50%),veh/ln	4.5	0.0	7.0	12.3	0.0	0.0	3.9	0.0	13.8	1.3	13.4	1.0
Unsig. Movement Delay, s/veh												
LnGrp Delay(d),s/veh	48.5	0.0	88.6	56.2	0.0	0.0	63.0	0.0	39.9	55.6	47.3	26.9
LnGrp LOS	D	A	F	E	A	A	E	A	D	E	D	C
Approach Vol, veh/h		353			415			694			605	
Approach Delay, s/veh		69.4			56.2			44.2			46.1	
Approach LOS		E			E			D			D	

Timer - Assigned Phs	1	2		4	5	6		8
Phs Duration (G+Y+Rc), s	9.3	41.8		20.0	14.8	36.3		32.7
Change Period (Y+Rc), s	5.6	5.8		5.9	5.6	5.8		5.9
Max Green Setting (Gmax), s	5.8	45.8		14.1	11.4	40.2		31.1
Max Q Clear Time (g_c+I1), s	4.7	31.9		15.0	9.4	29.0		26.0
Green Ext Time (p_c), s	0.0	1.8		0.0	0.0	1.5		0.8

Intersection Summary		
HCM 6th Ctrl Delay		51.5
HCM 6th LOS		D

Intersection	
Intersection Delay, s/veh	40.7
Intersection LOS	E

Movement	EBL	EBT	EBR	WBL	WBT	WBR	NBL	NBT	NBR	SBL	SBT	SBR
Lane Configurations												
Traffic Vol, veh/h	40	115	77	42	105	46	56	400	38	95	507	57
Future Vol, veh/h	40	115	77	42	105	46	56	400	38	95	507	57
Peak Hour Factor	0.81	0.81	0.81	0.89	0.89	0.89	0.86	0.86	0.86	0.73	0.73	0.73
Heavy Vehicles, %	2	2	2	2	2	2	2	2	2	2	2	2
Mvmt Flow	49	142	95	47	118	52	65	465	44	130	695	78
Number of Lanes	0	1	0	0	1	0	1	2	0	1	2	0

Approach	EB	WB	NB	SB
Opposing Approach	WB	EB	SB	NB
Opposing Lanes	1	1	3	3
Conflicting Approach Left	SB	NB	EB	WB
Conflicting Lanes Left	3	3	1	1
Conflicting Approach Right	NB	SB	WB	EB
Conflicting Lanes Right	3	3	1	1
HCM Control Delay	31.2	23.5	25.1	57.7
HCM LOS	D	C	D	F

Lane	NBLn1	NBLn2	NBLn3	EBLn1	WBLn1	SBLn1	SBLn2	SBLn3
Vol Left, %	100%	0%	0%	17%	22%	100%	0%	0%
Vol Thru, %	0%	100%	78%	50%	54%	0%	100%	75%
Vol Right, %	0%	0%	22%	33%	24%	0%	0%	25%
Sign Control	Stop	Stop	Stop	Stop	Stop	Stop	Stop	Stop
Traffic Vol by Lane	56	267	171	232	193	95	338	226
LT Vol	56	0	0	40	42	95	0	0
Through Vol	0	267	133	115	105	0	338	169
RT Vol	0	0	38	77	46	0	0	57
Lane Flow Rate	65	310	199	286	217	130	463	310
Geometry Grp	7	7	7	7	7	7	7	7
Degree of Util (X)	0.163	0.73	0.461	0.708	0.556	0.318	1.063	0.695
Departure Headway (Hd)	9.28	8.755	8.592	9.15	9.515	8.791	8.268	8.083
Convergence, Y/N	Yes	Yes	Yes	Yes	Yes	Yes	Yes	Yes
Cap	389	416	422	398	382	409	440	446
Service Time	6.98	6.455	6.292	6.85	7.215	6.541	6.017	5.832
HCM Lane V/C Ratio	0.167	0.745	0.472	0.719	0.568	0.318	1.052	0.695
HCM Control Delay	13.8	31.7	18.4	31.2	23.5	15.6	89.8	27.4
HCM Lane LOS	B	D	C	D	C	C	F	D
HCM 95th-tile Q	0.6	5.7	2.4	5.3	3.3	1.3	15	5.2



Movement	EBL	EBT	EBR	WBL	WBT	WBR	NBL	NBT	NBR	SBL	SBT	SBR
Lane Configurations												
Traffic Volume (veh/h)	73	48	181	56	27	16	68	608	34	17	729	52
Future Volume (veh/h)	73	48	181	56	27	16	68	608	34	17	729	52
Initial Q (Qb), veh	0	0	0	0	0	0	0	0	0	0	0	0
Ped-Bike Adj(A_pbT)	1.00		0.96	1.00		0.95	1.00		0.96	1.00		0.96
Parking Bus, Adj	1.00	1.00	1.00	1.00	1.00	1.00	1.00	1.00	1.00	1.00	1.00	1.00
Work Zone On Approach		No			No			No			No	
Adj Sat Flow, veh/h/ln	1870	1870	1870	1870	1870	1870	1870	1870	1870	1870	1870	1870
Adj Flow Rate, veh/h	94	62	232	74	36	21	70	627	35	18	792	57
Peak Hour Factor	0.78	0.78	0.78	0.76	0.76	0.76	0.97	0.97	0.97	0.92	0.92	0.92
Percent Heavy Veh, %	2	2	2	2	2	2	2	2	2	2	2	2
Cap, veh/h	201	133	280	137	67	39	121	1387	77	58	1243	89
Arrive On Green	0.18	0.18	0.18	0.14	0.14	0.14	0.07	0.41	0.41	0.03	0.37	0.37
Sat Flow, veh/h	1094	722	1522	990	482	281	1781	3413	190	1781	3350	241
Grp Volume(v), veh/h	156	0	232	131	0	0	70	326	336	18	420	429
Grp Sat Flow(s),veh/h/ln	1816	0	1522	1753	0	0	1781	1777	1826	1781	1777	1814
Q Serve(g_s), s	6.3	0.0	12.0	5.7	0.0	0.0	3.1	10.9	10.9	0.8	15.9	15.9
Cycle Q Clear(g_c), s	6.3	0.0	12.0	5.7	0.0	0.0	3.1	10.9	10.9	0.8	15.9	15.9
Prop In Lane	0.60		1.00	0.56		0.16	1.00		0.10	1.00		0.13
Lane Grp Cap(c), veh/h	334	0	280	242	0	0	121	722	743	58	660	673
V/C Ratio(X)	0.47	0.00	0.83	0.54	0.00	0.00	0.58	0.45	0.45	0.31	0.64	0.64
Avail Cap(c_a), veh/h	473	0	397	564	0	0	229	970	997	181	922	941
HCM Platoon Ratio	1.00	1.00	1.00	1.00	1.00	1.00	1.00	1.00	1.00	1.00	1.00	1.00
Upstream Filter(I)	1.00	0.00	1.00	1.00	0.00	0.00	1.00	1.00	1.00	1.00	1.00	1.00
Uniform Delay (d), s/veh	29.8	0.0	32.1	32.8	0.0	0.0	36.9	17.6	17.6	38.6	21.2	21.2
Incr Delay (d2), s/veh	1.0	0.0	9.7	1.9	0.0	0.0	1.6	1.6	1.6	1.1	3.7	3.6
Initial Q Delay(d3),s/veh	0.0	0.0	0.0	0.0	0.0	0.0	0.0	0.0	0.0	0.0	0.0	0.0
%ile BackOfQ(50%),veh/ln	2.8	0.0	5.0	2.5	0.0	0.0	1.4	4.4	4.5	0.4	6.7	6.8
Unsig. Movement Delay, s/veh												
LnGrp Delay(d),s/veh	30.8	0.0	41.8	34.7	0.0	0.0	38.5	19.2	19.2	39.7	24.8	24.8
LnGrp LOS	C	A	D	C	A	A	D	B	B	D	C	C
Approach Vol, veh/h		388			131			732			867	
Approach Delay, s/veh		37.4			34.7			21.1			25.1	
Approach LOS		D			C			C			C	

Timer - Assigned Phs	1	2		4	5	6		8
Phs Duration (G+Y+Rc), s	10.3	35.7		16.0	7.4	38.6		19.7
Change Period (Y+Rc), s	* 4.7	5.4		* 4.7	* 4.7	5.4		4.7
Max Green Setting (Gmax), s	* 11	42.4		* 26	* 8.3	44.6		21.3
Max Q Clear Time (g_c+I1), s	15.1	17.9		7.7	2.8	12.9		14.0
Green Ext Time (p_c), s	0.0	12.4		0.6	0.0	10.7		1.0

Intersection Summary	
HCM 6th Ctrl Delay	26.6
HCM 6th LOS	C

Notes

* HCM 6th computational engine requires equal clearance times for the phases crossing the barrier.



Movement	EBL	EBT	EBR	WBL	WBT	WBR	NBL	NBT	NBR	SBL	SBT	SBR
Lane Configurations												
Traffic Volume (veh/h)	96	56	230	73	61	51	186	502	39	56	698	87
Future Volume (veh/h)	96	56	230	73	61	51	186	502	39	56	698	87
Initial Q (Qb), veh	0	0	0	0	0	0	0	0	0	0	0	0
Ped-Bike Adj(A_pbT)	1.00		0.97	0.99		0.96	1.00		0.96	1.00		0.97
Parking Bus, Adj	1.00	1.00	1.00	1.00	1.00	1.00	1.00	1.00	1.00	1.00	1.00	1.00
Work Zone On Approach		No			No			No			No	
Adj Sat Flow, veh/h/ln	1870	1870	1870	1870	1870	1870	1870	1870	1870	1870	1870	1870
Adj Flow Rate, veh/h	107	62	256	85	71	59	200	540	42	60	743	93
Peak Hour Factor	0.90	0.90	0.90	0.86	0.86	0.86	0.93	0.93	0.93	0.94	0.94	0.94
Percent Heavy Veh, %	2	2	2	2	2	2	2	2	2	2	2	2
Cap, veh/h	136	664	548	156	124	84	240	1333	103	78	980	123
Arrive On Green	0.08	0.35	0.35	0.21	0.21	0.21	0.13	0.40	0.40	0.04	0.31	0.31
Sat Flow, veh/h	1781	1870	1543	458	576	391	1781	3329	258	1781	3166	396
Grp Volume(v), veh/h	107	62	256	215	0	0	200	288	294	60	417	419
Grp Sat Flow(s),veh/h/ln	1781	1870	1543	1426	0	0	1781	1777	1811	1781	1777	1785
Q Serve(g_s), s	5.1	1.9	11.2	9.0	0.0	0.0	9.5	10.1	10.2	2.9	18.4	18.5
Cycle Q Clear(g_c), s	5.1	1.9	11.2	11.8	0.0	0.0	9.5	10.1	10.2	2.9	18.4	18.5
Prop In Lane	1.00		1.00	0.40		0.27	1.00		0.14	1.00		0.22
Lane Grp Cap(c), veh/h	136	664	548	364	0	0	240	711	725	78	550	553
V/C Ratio(X)	0.79	0.09	0.47	0.59	0.00	0.00	0.83	0.40	0.41	0.77	0.76	0.76
Avail Cap(c_a), veh/h	215	1054	869	588	0	0	376	895	912	194	713	717
HCM Platoon Ratio	1.00	1.00	1.00	1.00	1.00	1.00	1.00	1.00	1.00	1.00	1.00	1.00
Upstream Filter(I)	1.00	1.00	1.00	1.00	0.00	0.00	1.00	1.00	1.00	1.00	1.00	1.00
Uniform Delay (d), s/veh	39.6	18.8	21.7	31.3	0.0	0.0	36.8	18.7	18.7	41.2	27.1	27.2
Incr Delay (d2), s/veh	3.8	0.0	0.2	0.6	0.0	0.0	8.9	0.5	0.5	5.7	4.2	4.2
Initial Q Delay(d3),s/veh	0.0	0.0	0.0	0.0	0.0	0.0	0.0	0.0	0.0	0.0	0.0	0.0
%ile BackOfQ(50%),veh/ln	2.4	0.8	3.9	4.1	0.0	0.0	4.7	4.1	4.2	1.4	8.2	8.2
Unsig. Movement Delay, s/veh												
LnGrp Delay(d),s/veh	43.4	18.8	22.0	31.8	0.0	0.0	45.7	19.2	19.2	47.0	31.3	31.3
LnGrp LOS	D	B	C	C	A	A	D	B	B	D	C	C
Approach Vol, veh/h		425			215			782			896	
Approach Delay, s/veh		26.9			31.8			26.0			32.4	
Approach LOS		C			C			C			C	

Timer - Assigned Phs	1	2		4	5	6	7	8
Phs Duration (G+Y+Rc), s	9.4	40.6		37.1	17.3	32.7	12.2	24.9
Change Period (Y+Rc), s	5.6	5.7		6.2	5.6	5.7	5.6	6.2
Max Green Setting (Gmax), s	9.5	43.9		49.1	18.4	35.0	10.5	33.0
Max Q Clear Time (g_c+I1), s	4.9	12.2		13.2	11.5	20.5	7.1	13.8
Green Ext Time (p_c), s	0.0	5.7		0.7	0.3	6.2	0.0	0.9

Intersection Summary		
HCM 6th Ctrl Delay		29.2
HCM 6th LOS		C



Movement	EBL	EBT	EBR	WBL	WBT	WBR	NBL	NBT	NBR	SBL	SBT	SBR
Lane Configurations												
Traffic Volume (veh/h)	0	0	0	198	2	262	185	721	0	0	983	95
Future Volume (veh/h)	0	0	0	198	2	262	185	721	0	0	983	95
Initial Q (Qb), veh				0	0	0	0	0	0	0	0	0
Ped-Bike Adj(A_pbT)				1.00		0.97	1.00		1.00	1.00		0.96
Parking Bus, Adj				1.00	1.00	1.00	1.00	1.00	1.00	1.00	1.00	1.00
Work Zone On Approach					No			No			No	
Adj Sat Flow, veh/h/ln				1870	1870	1870	1870	1870	0	0	1870	1870
Adj Flow Rate, veh/h				213	2	282	250	974	0	0	1117	108
Peak Hour Factor				0.93	0.93	0.93	0.74	0.74	0.74	0.88	0.88	0.88
Percent Heavy Veh, %				2	2	2	2	2	0	0	2	2
Cap, veh/h				419	4	364	285	2321	0	0	1449	140
Arrive On Green				0.24	0.24	0.24	0.16	0.65	0.00	0.00	0.44	0.44
Sat Flow, veh/h				1766	17	1532	1781	3647	0	0	3354	315
Grp Volume(v), veh/h				215	0	282	250	974	0	0	608	617
Grp Sat Flow(s),veh/h/ln				1782	0	1532	1781	1777	0	0	1777	1799
Q Serve(g_s), s				10.0	0.0	16.5	13.2	12.6	0.0	0.0	27.7	27.8
Cycle Q Clear(g_c), s				10.0	0.0	16.5	13.2	12.6	0.0	0.0	27.7	27.8
Prop In Lane				0.99		1.00	1.00		0.00	0.00		0.18
Lane Grp Cap(c), veh/h				423	0	364	285	2321	0	0	790	799
V/C Ratio(X)				0.51	0.00	0.78	0.88	0.42	0.00	0.00	0.77	0.77
Avail Cap(c_a), veh/h				689	0	592	399	2681	0	0	855	866
HCM Platoon Ratio				1.00	1.00	1.00	1.00	1.00	1.00	1.00	1.00	1.00
Upstream Filter(I)				1.00	0.00	1.00	1.00	1.00	0.00	0.00	1.00	1.00
Uniform Delay (d), s/veh				31.7	0.0	34.2	39.4	8.0	0.0	0.0	22.5	22.5
Incr Delay (d2), s/veh				0.9	0.0	3.6	11.7	0.4	0.0	0.0	6.3	6.3
Initial Q Delay(d3),s/veh				0.0	0.0	0.0	0.0	0.0	0.0	0.0	0.0	0.0
%ile BackOfQ(50%),veh/ln				4.4	0.0	6.4	6.5	4.1	0.0	0.0	12.0	12.2
Unsig. Movement Delay, s/veh												
LnGrp Delay(d),s/veh				32.7	0.0	37.8	51.1	8.4	0.0	0.0	28.8	28.9
LnGrp LOS				C	A	D	D	A	A	A	C	C
Approach Vol, veh/h					497			1224			1225	
Approach Delay, s/veh					35.6			17.1			28.8	
Approach LOS					D			B			C	

Timer - Assigned Phs	1	2		4		6						
Phs Duration (G+Y+Rc), s	20.0	48.0		27.9		68.1						
Change Period (Y+Rc), s	* 4.7	5.4		5.1		5.4						
Max Green Setting (Gmax), s	* 23	46.2		37.1		72.4						
Max Q Clear Time (g_c+I1), s	15.2	29.8		18.5		14.6						
Green Ext Time (p_c), s	0.2	12.8		2.2		23.4						

Intersection Summary	
HCM 6th Ctrl Delay	25.1
HCM 6th LOS	C

Notes

* HCM 6th computational engine requires equal clearance times for the phases crossing the barrier.



Movement	EBL	EBT	EBR	WBL	WBT	WBR	NBL	NBT	NBR	SBL	SBT	SBR
Lane Configurations												
Traffic Volume (veh/h)	69	3	242	0	0	0	0	836	293	372	809	0
Future Volume (veh/h)	69	3	242	0	0	0	0	836	293	372	809	0
Initial Q (Qb), veh	0	0	0				0	0	0	0	0	0
Ped-Bike Adj(A_pbT)	1.00		0.97				1.00		0.96	1.00		1.00
Parking Bus, Adj	1.00	1.00	1.00				1.00	1.00	1.00	1.00	1.00	1.00
Work Zone On Approach		No						No			No	
Adj Sat Flow, veh/h/ln	1870	1870	1870				0	1870	1870	1870	1870	0
Adj Flow Rate, veh/h	85	4	299				0	1045	366	448	975	0
Peak Hour Factor	0.81	0.81	0.81				0.80	0.80	0.80	0.83	0.83	0.83
Percent Heavy Veh, %	2	2	2				0	2	2	2	2	0
Cap, veh/h	84	4	296				0	1262	538	477	2362	0
Arrive On Green	0.24	0.24	0.24				0.00	0.36	0.36	0.27	0.66	0.00
Sat Flow, veh/h	347	16	1221				0	3647	1515	1781	3647	0
Grp Volume(v), veh/h	388	0	0				0	1045	366	448	975	0
Grp Sat Flow(s),veh/h/ln	1584	0	0				0	1777	1515	1781	1777	0
Q Serve(g_s), s	27.3	0.0	0.0				0.0	30.3	23.1	27.7	14.3	0.0
Cycle Q Clear(g_c), s	27.3	0.0	0.0				0.0	30.3	23.1	27.7	14.3	0.0
Prop In Lane	0.22		0.77				0.00		1.00	1.00		0.00
Lane Grp Cap(c), veh/h	384	0	0				0	1262	538	477	2362	0
V/C Ratio(X)	1.01	0.00	0.00				0.00	0.83	0.68	0.94	0.41	0.00
Avail Cap(c_a), veh/h	384	0	0				0	1299	554	574	2592	0
HCM Platoon Ratio	1.00	1.00	1.00				1.00	1.00	1.00	1.00	1.00	1.00
Upstream Filter(I)	1.00	0.00	0.00				0.00	1.00	1.00	1.00	1.00	0.00
Uniform Delay (d), s/veh	42.7	0.0	0.0				0.0	33.2	30.9	40.4	8.7	0.0
Incr Delay (d2), s/veh	48.7	0.0	0.0				0.0	5.9	5.8	20.1	0.4	0.0
Initial Q Delay(d3),s/veh	0.0	0.0	0.0				0.0	0.0	0.0	0.0	0.0	0.0
%ile BackOfQ(50%),veh/ln	15.7	0.0	0.0				0.0	13.5	9.0	14.4	4.9	0.0
Unsig. Movement Delay, s/veh												
LnGrp Delay(d),s/veh	91.4	0.0	0.0				0.0	39.0	36.7	60.5	9.2	0.0
LnGrp LOS	F	A	A				A	D	D	E	A	A
Approach Vol, veh/h		388						1411			1423	
Approach Delay, s/veh		91.4						38.4			25.3	
Approach LOS		F						D			C	

Timer - Assigned Phs		2			5	6		8				
Phs Duration (G+Y+Rc), s		80.3			34.9	45.4		32.4				
Change Period (Y+Rc), s		5.4			* 4.7	5.4		5.1				
Max Green Setting (Gmax), s		82.2			* 36	41.2		27.3				
Max Q Clear Time (g_c+I1), s		16.3			29.7	32.3		29.3				
Green Ext Time (p_c), s		24.5			0.4	7.7		0.0				

Intersection Summary												
HCM 6th Ctrl Delay			39.0									
HCM 6th LOS			D									

Notes

* HCM 6th computational engine requires equal clearance times for the phases crossing the barrier.



Movement	EBL	EBT	EBR	WBL	WBT	WBR	NBL	NBT	NBR	SBL	SBT	SBR
Lane Configurations												
Traffic Volume (veh/h)	0	0	0	147	6	58	0	561	300	0	687	67
Future Volume (veh/h)	0	0	0	147	6	58	0	561	300	0	687	67
Initial Q (Qb), veh				0	0	0	0	0	0	0	0	0
Ped-Bike Adj(A_pbT)				1.00		0.96	1.00		0.96	1.00		0.96
Parking Bus, Adj				1.00	1.00	1.00	1.00	1.00	1.00	1.00	1.00	1.00
Work Zone On Approach					No			No			No	
Adj Sat Flow, veh/h/ln				1870	1870	1870	0	1870	1870	0	1870	1870
Adj Flow Rate, veh/h				184	8	72	0	603	323	0	818	80
Peak Hour Factor				0.80	0.80	0.80	0.93	0.93	0.93	0.84	0.84	0.84
Percent Heavy Veh, %				2	2	2	0	2	2	0	2	2
Cap, veh/h				368	16	328	0	1545	662	0	2048	199
Arrive On Green				0.21	0.21	0.21	0.00	0.43	0.43	0.00	0.43	0.43
Sat Flow, veh/h				1710	74	1528	0	3647	1522	0	4880	458
Grp Volume(v), veh/h				192	0	72	0	603	323	0	590	308
Grp Sat Flow(s),veh/h/ln				1785	0	1528	0	1777	1522	0	1702	1766
Q Serve(g_s), s				3.4	0.0	1.4	0.0	4.1	5.4	0.0	4.2	4.3
Cycle Q Clear(g_c), s				3.4	0.0	1.4	0.0	4.1	5.4	0.0	4.2	4.3
Prop In Lane				0.96		1.00	0.00		1.00	0.00		0.26
Lane Grp Cap(c), veh/h				384	0	328	0	1545	662	0	1480	768
V/C Ratio(X)				0.50	0.00	0.22	0.00	0.39	0.49	0.00	0.40	0.40
Avail Cap(c_a), veh/h				2347	0	2009	0	6037	2586	0	5783	2999
HCM Platoon Ratio				1.00	1.00	1.00	1.00	1.00	1.00	1.00	1.00	1.00
Upstream Filter(I)				1.00	0.00	1.00	0.00	1.00	1.00	0.00	1.00	1.00
Uniform Delay (d), s/veh				12.3	0.0	11.5	0.0	6.9	7.2	0.0	6.9	6.9
Incr Delay (d2), s/veh				1.0	0.0	0.3	0.0	0.2	0.6	0.0	0.2	0.3
Initial Q Delay(d3),s/veh				0.0	0.0	0.0	0.0	0.0	0.0	0.0	0.0	0.0
%ile BackOfQ(50%),veh/ln				1.2	0.0	0.4	0.0	0.9	1.0	0.0	0.8	0.9
Unsig. Movement Delay, s/veh												
LnGrp Delay(d),s/veh				13.3	0.0	11.9	0.0	7.0	7.8	0.0	7.1	7.2
LnGrp LOS				B	A	B	A	A	A	A	A	A
Approach Vol, veh/h					264			926			898	
Approach Delay, s/veh					12.9			7.3			7.1	
Approach LOS					B			A			A	

Timer - Assigned Phs	2		6		8			
Phs Duration (G+Y+Rc), s	21.9		21.9		13.8			
Change Period (Y+Rc), s	6.4		6.4		6.1			
Max Green Setting (Gmax), s	60.6		60.6		46.9			
Max Q Clear Time (g_c+I1), s	7.4		6.3		5.4			
Green Ext Time (p_c), s	5.8		6.7		1.5			

Intersection Summary		
HCM 6th Ctrl Delay	7.9	
HCM 6th LOS	A	



Movement	EBL	EBT	EBR	WBL	WBT	WBR	NBL	NBT	NBR	SBL	SBT	SBR
Lane Configurations												
Traffic Volume (veh/h)	47	2	372	0	0	0	0	814	205	117	716	0
Future Volume (veh/h)	47	2	372	0	0	0	0	814	205	117	716	0
Initial Q (Qb), veh	0	0	0				0	0	0	0	0	0
Ped-Bike Adj(A_pbT)	1.00		0.95				1.00		0.96	1.00		1.00
Parking Bus, Adj	1.00	1.00	1.00				1.00	1.00	1.00	1.00	1.00	1.00
Work Zone On Approach		No						No			No	
Adj Sat Flow, veh/h/ln	1870	1870	1870				0	1870	1870	1870	1870	0
Adj Flow Rate, veh/h	55	2	433				0	857	216	130	796	0
Peak Hour Factor	0.86	0.86	0.86				0.95	0.95	0.95	0.90	0.90	0.90
Percent Heavy Veh, %	2	2	2				0	2	2	2	2	0
Cap, veh/h	420	15	643				0	1298	554	171	1967	0
Arrive On Green	0.24	0.24	0.24				0.00	0.37	0.37	0.10	0.55	0.00
Sat Flow, veh/h	1722	63	2636				0	3647	1516	1781	3647	0
Grp Volume(v), veh/h	57	0	433				0	857	216	130	796	0
Grp Sat Flow(s),veh/h/ln	1784	0	1318				0	1777	1516	1781	1777	0
Q Serve(g_s), s	1.5	0.0	9.2				0.0	12.4	6.5	4.4	8.0	0.0
Cycle Q Clear(g_c), s	1.5	0.0	9.2				0.0	12.4	6.5	4.4	8.0	0.0
Prop In Lane	0.96		1.00				0.00		1.00	1.00		0.00
Lane Grp Cap(c), veh/h	435	0	643				0	1298	554	171	1967	0
V/C Ratio(X)	0.13	0.00	0.67				0.00	0.66	0.39	0.76	0.40	0.00
Avail Cap(c_a), veh/h	1038	0	1534				0	2683	1145	557	4123	0
HCM Platoon Ratio	1.00	1.00	1.00				1.00	1.00	1.00	1.00	1.00	1.00
Upstream Filter(I)	1.00	0.00	1.00				0.00	1.00	1.00	1.00	1.00	0.00
Uniform Delay (d), s/veh	18.2	0.0	21.1				0.0	16.4	14.5	27.2	7.9	0.0
Incr Delay (d2), s/veh	0.1	0.0	1.2				0.0	0.6	0.4	6.8	0.1	0.0
Initial Q Delay(d3),s/veh	0.0	0.0	0.0				0.0	0.0	0.0	0.0	0.0	0.0
%ile BackOfQ(50%),veh/ln	0.6	0.0	2.7				0.0	4.4	2.0	2.0	2.2	0.0
Unsig. Movement Delay, s/veh												
LnGrp Delay(d),s/veh	18.4	0.0	22.3				0.0	17.0	14.9	34.0	8.1	0.0
LnGrp LOS	B	A	C				A	B	B	C	A	A
Approach Vol, veh/h		490						1073			926	
Approach Delay, s/veh		21.9						16.6			11.7	
Approach LOS		C						B			B	

Timer - Assigned Phs	1	2	4	6
Phs Duration (G+Y+Rc), s	11.6	28.9	21.2	40.6
Change Period (Y+Rc), s	* 5.7	6.4	6.1	6.4
Max Green Setting (Gmax), s	* 13	46.6	35.9	71.6
Max Q Clear Time (g_c+I1), s	10.4	14.4	11.2	10.0
Green Ext Time (p_c), s	0.2	7.4	2.3	6.2

Intersection Summary	
HCM 6th Ctrl Delay	15.8
HCM 6th LOS	B

Notes

* HCM 6th computational engine requires equal clearance times for the phases crossing the barrier.



Movement	EBL	EBT	EBR	WBL	WBT	WBR	NBL	NBT	NBR	SBL	SBT	SBR
Lane Configurations												
Traffic Volume (veh/h)	40	71	31	3	105	77	27	38	3	105	104	34
Future Volume (veh/h)	40	71	31	3	105	77	27	38	3	105	104	34
Initial Q (Qb), veh	0	0	0	0	0	0	0	0	0	0	0	0
Ped-Bike Adj(A_pbT)	1.00		0.96	1.00		0.95	1.00		0.98	1.00		0.96
Parking Bus, Adj	1.00	1.00	1.00	1.00	1.00	1.00	1.00	1.00	1.00	1.00	1.00	1.00
Work Zone On Approach		No			No			No			No	
Adj Sat Flow, veh/h/ln	1870	1870	1870	1870	1870	1870	1870	1870	1870	1870	1870	1870
Adj Flow Rate, veh/h	45	80	35	3	115	85	39	55	4	113	112	37
Peak Hour Factor	0.89	0.89	0.89	0.91	0.91	0.91	0.69	0.69	0.69	0.93	0.93	0.93
Percent Heavy Veh, %	2	2	2	2	2	2	2	2	2	2	2	2
Cap, veh/h	75	353	288	7	282	228	68	1571	684	145	1277	402
Arrive On Green	0.04	0.19	0.19	0.00	0.15	0.15	0.04	0.44	0.44	0.08	0.49	0.49
Sat Flow, veh/h	1781	1870	1523	1781	1870	1513	1781	3554	1548	1781	2632	828
Grp Volume(v), veh/h	45	80	35	3	115	85	39	55	4	113	74	75
Grp Sat Flow(s),veh/h/ln	1781	1870	1523	1781	1870	1513	1781	1777	1548	1781	1777	1683
Q Serve(g_s), s	1.7	2.5	1.3	0.1	3.8	3.5	1.5	0.6	0.1	4.3	1.5	1.6
Cycle Q Clear(g_c), s	1.7	2.5	1.3	0.1	3.8	3.5	1.5	0.6	0.1	4.3	1.5	1.6
Prop In Lane	1.00		1.00	1.00		1.00	1.00		1.00	1.00		0.49
Lane Grp Cap(c), veh/h	75	353	288	7	282	228	68	1571	684	145	862	817
V/C Ratio(X)	0.60	0.23	0.12	0.42	0.41	0.37	0.57	0.04	0.01	0.78	0.09	0.09
Avail Cap(c_a), veh/h	177	984	801	130	935	756	167	1571	684	271	862	817
HCM Platoon Ratio	1.00	1.00	1.00	1.00	1.00	1.00	1.00	1.00	1.00	1.00	1.00	1.00
Upstream Filter(I)	1.00	1.00	1.00	1.00	1.00	1.00	1.00	1.00	1.00	1.00	1.00	1.00
Uniform Delay (d), s/veh	32.2	23.5	23.0	34.0	26.3	26.1	32.4	10.8	10.7	30.8	9.5	9.5
Incr Delay (d2), s/veh	2.9	0.3	0.2	13.6	0.9	1.0	2.8	0.0	0.0	3.4	0.2	0.2
Initial Q Delay(d3),s/veh	0.0	0.0	0.0	0.0	0.0	0.0	0.0	0.0	0.0	0.0	0.0	0.0
%ile BackOfQ(50%),veh/ln	0.8	1.1	0.5	0.1	1.7	1.3	0.7	0.2	0.0	1.9	0.6	0.6
Unsig. Movement Delay, s/veh												
LnGrp Delay(d),s/veh	35.1	23.8	23.2	47.5	27.2	27.1	35.1	10.9	10.7	34.2	9.7	9.7
LnGrp LOS	D	C	C	D	C	C	D	B	B	C	A	A
Approach Vol, veh/h		160			203			98			262	
Approach Delay, s/veh		26.9			27.5			20.5			20.3	
Approach LOS		C			C			C			C	

Timer - Assigned Phs	1	2	3	4	5	6	7	8
Phs Duration (G+Y+Rc), s	7.2	38.3	7.5	15.4	10.2	35.3	4.9	18.0
Change Period (Y+Rc), s	4.6	5.1	4.6	5.1	4.6	5.1	4.6	5.1
Max Green Setting (Gmax), s	6.4	33.2	6.8	34.2	10.4	29.2	5.0	36.0
Max Q Clear Time (g_c+I1), s	3.5	3.6	3.7	5.8	6.3	2.6	2.1	4.5
Green Ext Time (p_c), s	0.0	1.2	0.0	0.9	0.0	0.4	0.0	0.5

Intersection Summary	
HCM 6th Ctrl Delay	23.8
HCM 6th LOS	C



Movement	EBL	EBT	EBR	WBL	WBT	WBR	NBL	NBT	NBR	SBL	SBT	SBR
Lane Configurations												
Traffic Volume (veh/h)	206	75	138	69	68	314	141	453	56	404	460	153
Future Volume (veh/h)	206	75	138	69	68	314	141	453	56	404	460	153
Initial Q (Qb), veh	0	0	0	0	0	0	0	0	0	0	0	0
Ped-Bike Adj(A_pbT)	1.00		0.96	1.00		0.97	1.00		0.96	1.00		0.97
Parking Bus, Adj	1.00	1.00	1.00	1.00	1.00	1.00	1.00	1.00	1.00	1.00	1.00	1.00
Work Zone On Approach		No			No			No			No	
Adj Sat Flow, veh/h/ln	1870	1870	1870	1870	1870	1870	1870	1870	1870	1870	1870	1870
Adj Flow Rate, veh/h	231	84	155	93	92	424	191	612	76	475	541	180
Peak Hour Factor	0.89	0.89	0.89	0.74	0.74	0.74	0.74	0.74	0.74	0.85	0.85	0.85
Percent Heavy Veh, %	2	2	2	2	2	2	2	2	2	2	2	2
Cap, veh/h	302	317	258	437	459	650	214	690	85	308	716	237
Arrive On Green	0.17	0.17	0.17	0.25	0.25	0.25	0.12	0.22	0.22	0.17	0.28	0.28
Sat Flow, veh/h	1781	1870	1518	1781	1870	1533	1781	3167	392	1781	2599	861
Grp Volume(v), veh/h	231	84	155	93	92	424	191	343	345	475	369	352
Grp Sat Flow(s),veh/h/ln	1781	1870	1518	1781	1870	1533	1781	1777	1783	1781	1777	1683
Q Serve(g_s), s	16.9	5.3	12.9	5.7	5.3	30.3	14.4	25.5	25.6	23.6	25.9	26.1
Cycle Q Clear(g_c), s	16.9	5.3	12.9	5.7	5.3	30.3	14.4	25.5	25.6	23.6	25.9	26.1
Prop In Lane	1.00		1.00	1.00		1.00	1.00		0.22	1.00		0.51
Lane Grp Cap(c), veh/h	302	317	258	437	459	650	214	387	388	308	490	464
V/C Ratio(X)	0.76	0.26	0.60	0.21	0.20	0.65	0.89	0.89	0.89	1.54	0.75	0.76
Avail Cap(c_a), veh/h	431	452	367	470	494	679	223	402	404	308	499	473
HCM Platoon Ratio	1.00	1.00	1.00	1.00	1.00	1.00	1.00	1.00	1.00	1.00	1.00	1.00
Upstream Filter(I)	1.00	1.00	1.00	1.00	1.00	1.00	1.00	1.00	1.00	1.00	1.00	1.00
Uniform Delay (d), s/veh	54.0	49.2	52.4	41.0	40.9	31.9	59.1	51.7	51.8	56.4	45.2	45.3
Incr Delay (d2), s/veh	6.5	0.6	3.2	0.1	0.1	1.6	30.9	23.3	23.7	259.3	9.2	10.0
Initial Q Delay(d3),s/veh	0.0	0.0	0.0	0.0	0.0	0.0	0.0	0.0	0.0	0.0	0.0	0.0
%ile BackOfQ(50%),veh/ln	8.0	2.5	5.1	2.5	2.5	11.2	8.3	13.7	13.8	32.6	12.5	12.0
Unsig. Movement Delay, s/veh												
LnGrp Delay(d),s/veh	60.5	49.9	55.6	41.1	40.9	33.5	90.0	75.0	75.4	315.7	54.4	55.2
LnGrp LOS	E	D	E	D	D	C	F	E	E	F	D	E
Approach Vol, veh/h		470			609			879			1196	
Approach Delay, s/veh		57.0			35.8			78.4			158.4	
Approach LOS		E			D			E			F	

Timer - Assigned Phs	1	2		4	5	6		8
Phs Duration (G+Y+Rc), s	21.1	44.9		39.9	29.0	37.0		30.6
Change Period (Y+Rc), s	* 4.7	* 7.3		6.4	5.4	7.3		7.4
Max Green Setting (Gmax), s	* 17	* 38		36.0	23.6	30.9		33.0
Max Q Clear Time (g_c+I1), s	16.4	28.1		32.3	25.6	27.6		18.9
Green Ext Time (p_c), s	0.0	5.8		0.6	0.0	2.1		2.2

Intersection Summary	
HCM 6th Ctrl Delay	97.3
HCM 6th LOS	F

Notes

* HCM 6th computational engine requires equal clearance times for the phases crossing the barrier.

Intersection	
Int Delay, s/veh	0.4

Movement	EBL	EBR	NBL	NBT	SBT	SBR
Lane Configurations						
Traffic Vol, veh/h	7	121	46	388	490	7
Future Vol, veh/h	7	121	46	388	490	7
Conflicting Peds, #/hr	10	10	10	0	0	10
Sign Control	Free	Free	Free	Free	Stop	Stop
RT Channelized	-	None	-	None	-	None
Storage Length	0	-	-	-	-	-
Veh in Median Storage, #	2	-	-	0	0	-
Grade, %	0	-	-	0	0	-
Peak Hour Factor	85	85	85	85	73	73
Heavy Vehicles, %	2	2	2	2	2	2
Mvmt Flow	8	142	54	456	671	10

Major/Minor	Major1		Minor2	
Conflicting Flow All	10	0	574	20
Stage 1	-	-	10	-
Stage 2	-	-	564	-
Critical Hdwy	4.14	-	6.54	6.94
Critical Hdwy Stg 1	-	-	-	-
Critical Hdwy Stg 2	-	-	5.54	-
Follow-up Hdwy	2.22	-	4.02	3.32
Pot Cap-1 Maneuver	1608	-	~ 428	1053
Stage 1	-	-	-	-
Stage 2	-	-	~ 507	-
Platoon blocked, %		-		
Mov Cap-1 Maneuver	1593	-	0	1033
Mov Cap-2 Maneuver	-	-	0	-
Stage 1	-	-	0	-
Stage 2	-	-	0	-

Approach	NB	SB
HCM Control Delay, s	0.9	
HCM LOS		-

Minor Lane/Major Mvmt	NBL	NBT	SBLn1	SBLn2
Capacity (veh/h)	1593	-	-	1033
HCM Lane V/C Ratio	0.034	-	-	0.334
HCM Control Delay (s)	7.3	0.1	-	10.2
HCM Lane LOS	A	A	-	B
HCM 95th %tile Q(veh)	0.1	-	-	1.5

Notes			
~: Volume exceeds capacity	$: Delay exceeds 300s	+: Computation Not Defined	*: All major volume in platoon



Movement	WBL	WBR	NBT	NBR	SBL	SBT
Lane Configurations						
Traffic Volume (veh/h)	105	220	248	60	192	439
Future Volume (veh/h)	105	220	248	60	192	439
Initial Q (Qb), veh	0	0	0	0	0	0
Ped-Bike Adj(A_pbT)	1.00	1.00		0.94	1.00	
Parking Bus, Adj	1.00	1.00	1.00	1.00	1.00	1.00
Work Zone On Approach	No		No			No
Adj Sat Flow, veh/h/ln	1870	1870	1870	1870	1870	1870
Adj Flow Rate, veh/h	194	407	270	65	206	472
Peak Hour Factor	0.54	0.54	0.92	0.92	0.93	0.93
Percent Heavy Veh, %	2	2	2	2	2	2
Cap, veh/h	546	486	682	160	257	867
Arrive On Green	0.31	0.31	0.24	0.24	0.14	0.46
Sat Flow, veh/h	1781	1585	2913	663	1781	1870
Grp Volume(v), veh/h	194	407	168	167	206	472
Grp Sat Flow(s),veh/h/ln	1781	1585	1777	1705	1781	1870
Q Serve(g_s), s	5.2	14.6	4.8	5.0	6.8	11.0
Cycle Q Clear(g_c), s	5.2	14.6	4.8	5.0	6.8	11.0
Prop In Lane	1.00	1.00		0.39	1.00	
Lane Grp Cap(c), veh/h	546	486	430	413	257	867
V/C Ratio(X)	0.36	0.84	0.39	0.41	0.80	0.54
Avail Cap(c_a), veh/h	1574	1401	1173	1126	1091	2568
HCM Platoon Ratio	1.00	1.00	1.00	1.00	1.00	1.00
Upstream Filter(I)	1.00	1.00	1.00	1.00	1.00	1.00
Uniform Delay (d), s/veh	16.4	19.7	19.3	19.4	25.2	11.7
Incr Delay (d2), s/veh	0.4	3.9	2.1	2.3	2.2	1.9
Initial Q Delay(d3),s/veh	0.0	0.0	0.0	0.0	0.0	0.0
%ile BackOfQ(50%),veh/ln	1.9	12.2	2.0	2.0	2.7	4.1
Unsig. Movement Delay, s/veh						
LnGrp Delay(d),s/veh	16.8	23.6	21.4	21.7	27.4	13.6
LnGrp LOS	B	C	C	C	C	B
Approach Vol, veh/h	601		335			678
Approach Delay, s/veh	21.4		21.6			17.8
Approach LOS	C		C			B

Timer - Assigned Phs		2		4	5	6
Phs Duration (G+Y+Rc), s		36.0		24.8	13.5	22.5
Change Period (Y+Rc), s		* 7.8		6.2	* 4.7	7.8
Max Green Setting (Gmax), s		* 84		53.8	* 37	40.2
Max Q Clear Time (g_c+I1), s		13.0		16.6	8.8	7.0
Green Ext Time (p_c), s		9.2		2.1	0.3	5.0

Intersection Summary	
HCM 6th Ctrl Delay	19.9
HCM 6th LOS	B

Notes

* HCM 6th computational engine requires equal clearance times for the phases crossing the barrier.

Intersection	
Int Delay, s/veh	1.5

Movement	EBT	EBR	WBL	WBT	NBL	NBR
Lane Configurations						
Traffic Vol, veh/h	316	40	46	213	15	41
Future Vol, veh/h	316	40	46	213	15	41
Conflicting Peds, #/hr	0	10	10	0	10	10
Sign Control	Free	Free	Free	Free	Stop	Stop
RT Channelized	-	None	-	None	-	None
Storage Length	-	-	-	-	0	-
Veh in Median Storage, #	0	-	-	0	0	-
Grade, %	0	-	-	0	0	-
Peak Hour Factor	67	67	91	91	86	86
Heavy Vehicles, %	2	2	2	2	2	2
Mvmt Flow	472	60	51	234	17	48

Major/Minor	Major1		Major2		Minor1	
Conflicting Flow All	0	0	542	0	858	522
Stage 1	-	-	-	-	512	-
Stage 2	-	-	-	-	346	-
Critical Hdwy	-	-	4.12	-	6.42	6.22
Critical Hdwy Stg 1	-	-	-	-	5.42	-
Critical Hdwy Stg 2	-	-	-	-	5.42	-
Follow-up Hdwy	-	-	2.218	-	3.518	3.318
Pot Cap-1 Maneuver	-	-	1027	-	327	555
Stage 1	-	-	-	-	602	-
Stage 2	-	-	-	-	716	-
Platoon blocked, %	-	-		-		
Mov Cap-1 Maneuver	-	-	1017	-	302	544
Mov Cap-2 Maneuver	-	-	-	-	302	-
Stage 1	-	-	-	-	596	-
Stage 2	-	-	-	-	668	-

Approach	EB	WB	NB
HCM Control Delay, s	0	1.5	14.4
HCM LOS			B

Minor Lane/Major Mvmt	NBLn1	EBT	EBR	WBL	WBT
Capacity (veh/h)	448	-	-	1017	-
HCM Lane V/C Ratio	0.145	-	-	0.05	-
HCM Control Delay (s)	14.4	-	-	8.7	0
HCM Lane LOS	B	-	-	A	A
HCM 95th %tile Q(veh)	0.5	-	-	0.2	-

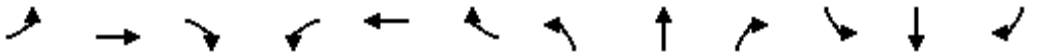

Movement	EBL	EBT	EBR	WBL	WBT	WBR	NBL	NBT	NBR	SBL	SBT	SBR
Lane Configurations												
Traffic Volume (veh/h)	83	188	84	40	103	182	93	356	34	268	445	61
Future Volume (veh/h)	83	188	84	40	103	182	93	356	34	268	445	61
Initial Q (Qb), veh	0	0	0	0	0	0	0	0	0	0	0	0
Ped-Bike Adj(A_pbT)	1.00		0.97	1.00		1.00	1.00		0.96	1.00		0.97
Parking Bus, Adj	1.00	1.00	1.00	1.00	1.00	1.00	1.00	1.00	1.00	1.00	1.00	1.00
Work Zone On Approach		No			No			No			No	
Adj Sat Flow, veh/h/ln	1870	1870	1870	1870	1870	1870	1870	1870	1870	1870	1870	1870
Adj Flow Rate, veh/h	122	276	124	44	114	0	95	363	35	285	473	65
Peak Hour Factor	0.68	0.68	0.68	0.90	0.90	0.90	0.98	0.98	0.98	0.94	0.94	0.94
Percent Heavy Veh, %	2	2	2	2	2	2	2	2	2	2	2	2
Cap, veh/h	161	561	244	76	668		125	747	321	349	1052	144
Arrive On Green	0.09	0.24	0.24	0.04	0.19	0.00	0.07	0.21	0.21	0.20	0.34	0.34
Sat Flow, veh/h	1781	2382	1036	1781	3554	1585	1781	3554	1528	1781	3129	428
Grp Volume(v), veh/h	122	204	196	44	114	0	95	363	35	285	268	270
Grp Sat Flow(s),veh/h/ln	1781	1777	1641	1781	1777	1585	1781	1777	1528	1781	1777	1779
Q Serve(g_s), s	4.3	6.3	6.6	1.5	1.7	0.0	3.3	5.7	1.2	9.8	7.5	7.6
Cycle Q Clear(g_c), s	4.3	6.3	6.6	1.5	1.7	0.0	3.3	5.7	1.2	9.8	7.5	7.6
Prop In Lane	1.00		0.63	1.00		1.00	1.00		1.00	1.00		0.24
Lane Grp Cap(c), veh/h	161	418	387	76	668		125	747	321	349	598	598
V/C Ratio(X)	0.76	0.49	0.51	0.58	0.17		0.76	0.49	0.11	0.82	0.45	0.45
Avail Cap(c_a), veh/h	571	1225	1131	291	1892		487	1964	844	1130	1624	1626
HCM Platoon Ratio	1.00	1.00	1.00	1.00	1.00	1.00	1.00	1.00	1.00	1.00	1.00	1.00
Upstream Filter(I)	1.00	1.00	1.00	1.00	1.00	0.00	1.00	1.00	1.00	1.00	1.00	1.00
Uniform Delay (d), s/veh	28.3	21.0	21.1	29.9	21.7	0.0	29.1	22.1	20.3	24.5	16.5	16.5
Incr Delay (d2), s/veh	7.2	0.9	1.0	6.9	0.1	0.0	9.2	0.5	0.1	4.7	0.5	0.5
Initial Q Delay(d3),s/veh	0.0	0.0	0.0	0.0	0.0	0.0	0.0	0.0	0.0	0.0	0.0	0.0
%ile BackOfQ(50%),veh/ln	2.0	2.4	2.4	0.8	0.7	0.0	1.6	2.2	0.4	4.1	2.7	2.8
Unsig. Movement Delay, s/veh												
LnGrp Delay(d),s/veh	35.5	21.9	22.2	36.8	21.8	0.0	38.2	22.6	20.5	29.2	17.0	17.1
LnGrp LOS	D	C	C	D	C		D	C	C	C	B	B
Approach Vol, veh/h		522			158	A		493			823	
Approach Delay, s/veh		25.2			26.0			25.5			21.2	
Approach LOS		C			C			C			C	

Timer - Assigned Phs	1	2	3	4	5	6	7	8
Phs Duration (G+Y+Rc), s	17.1	19.2	7.3	20.1	9.1	27.2	10.3	17.1
Change Period (Y+Rc), s	4.6	5.8	4.6	5.1	4.6	5.8	4.6	5.1
Max Green Setting (Gmax), s	40.4	35.2	10.4	43.9	17.4	58.2	20.4	33.9
Max Q Clear Time (g_c+I1), s	11.8	7.7	3.5	8.6	5.3	9.6	6.3	3.7
Green Ext Time (p_c), s	0.8	2.4	0.0	2.4	0.1	3.3	0.2	0.6

Intersection Summary	
HCM 6th Ctrl Delay	23.7
HCM 6th LOS	C

Notes

Unsignalized Delay for [WBR] is excluded from calculations of the approach delay and intersection delay.

Intersection	
Intersection Delay, s/veh	9.6
Intersection LOS	A

Movement	EBL	EBT	EBR	WBL	WBT	WBR	NBL	NBT	NBR	SBL	SBT	SBR
Lane Configurations												
Traffic Vol, veh/h	35	66	8	7	68	41	9	36	29	30	30	33
Future Vol, veh/h	35	66	8	7	68	41	9	36	29	30	30	33
Peak Hour Factor	0.74	0.74	0.74	0.79	0.79	0.79	0.45	0.45	0.45	0.87	0.87	0.87
Heavy Vehicles, %	2	2	2	2	2	2	2	2	2	2	2	2
Mvmt Flow	47	89	11	9	86	52	20	80	64	34	34	38
Number of Lanes	0	1	1	0	1	0	0	1	0	0	1	1

Approach	EB	WB	NB	SB
Opposing Approach	WB	EB	SB	NB
Opposing Lanes	1	2	2	1
Conflicting Approach Left	SB	NB	EB	WB
Conflicting Lanes Left	2	1	2	1
Conflicting Approach Right	NB	SB	WB	EB
Conflicting Lanes Right	1	2	1	2
HCM Control Delay	9.6	9.8	10	8.7
HCM LOS	A	A	A	A

Lane	NBLn1	EBLn1	EBLn2	WBLn1	SBLn1	SBLn2
Vol Left, %	12%	35%	0%	6%	50%	0%
Vol Thru, %	49%	65%	0%	59%	50%	0%
Vol Right, %	39%	0%	100%	35%	0%	100%
Sign Control	Stop	Stop	Stop	Stop	Stop	Stop
Traffic Vol by Lane	74	101	8	116	60	33
LT Vol	9	35	0	7	30	0
Through Vol	36	66	0	68	30	0
RT Vol	29	0	8	41	0	33
Lane Flow Rate	164	136	11	147	69	38
Geometry Grp	6	7	7	6	7	7
Degree of Util (X)	0.24	0.211	0.014	0.214	0.11	0.05
Departure Headway (Hd)	5.249	5.572	4.693	5.249	5.748	4.79
Convergence, Y/N	Yes	Yes	Yes	Yes	Yes	Yes
Cap	681	641	757	680	620	742
Service Time	3.31	3.335	2.455	3.312	3.515	2.556
HCM Lane V/C Ratio	0.241	0.212	0.015	0.216	0.111	0.051
HCM Control Delay	10	9.8	7.5	9.8	9.2	7.8
HCM Lane LOS	A	A	A	A	A	A
HCM 95th-tile Q	0.9	0.8	0	0.8	0.4	0.2

Intersection	
Intersection Delay, s/veh	10.3
Intersection LOS	B

Movement	EBL	EBT	EBR	WBL	WBT	WBR	NBL	NBT	NBR	SBL	SBT	SBR
Lane Configurations												
Traffic Vol, veh/h	4	58	21	2	65	122	19	68	1	75	112	8
Future Vol, veh/h	4	58	21	2	65	122	19	68	1	75	112	8
Peak Hour Factor	0.68	0.68	0.68	0.66	0.66	0.66	0.70	0.70	0.70	0.84	0.84	0.84
Heavy Vehicles, %	2	2	2	2	2	2	2	2	2	2	2	2
Mvmt Flow	6	85	31	3	98	185	27	97	1	89	133	10
Number of Lanes	0	1	0	0	1	0	0	1	0	0	1	0

Approach	EB	WB	NB	SB
Opposing Approach	WB	EB	SB	NB
Opposing Lanes	1	1	1	1
Conflicting Approach Left	SB	NB	EB	WB
Conflicting Lanes Left	1	1	1	1
Conflicting Approach Right	NB	SB	WB	EB
Conflicting Lanes Right	1	1	1	1
HCM Control Delay	9.3	10.5	9.6	10.8
HCM LOS	A	B	A	B

Lane	NBLn1	EBLn1	WBLn1	SBLn1
Vol Left, %	22%	5%	1%	38%
Vol Thru, %	77%	70%	34%	57%
Vol Right, %	1%	25%	65%	4%
Sign Control	Stop	Stop	Stop	Stop
Traffic Vol by Lane	88	83	189	195
LT Vol	19	4	2	75
Through Vol	68	58	65	112
RT Vol	1	21	122	8
Lane Flow Rate	126	122	286	232
Geometry Grp	1	1	1	1
Degree of Util (X)	0.187	0.175	0.368	0.337
Departure Headway (Hd)	5.359	5.164	4.725	5.219
Convergence, Y/N	Yes	Yes	Yes	Yes
Cap	673	696	767	694
Service Time	3.372	3.187	2.725	3.219
HCM Lane V/C Ratio	0.187	0.175	0.373	0.334
HCM Control Delay	9.6	9.3	10.5	10.8
HCM Lane LOS	A	A	B	B
HCM 95th-tile Q	0.7	0.6	1.7	1.5

Intersection	
Intersection Delay, s/veh	13.1
Intersection LOS	B

Movement	EBL	EBT	EBR	WBL	WBT	WBR	NBL	NBT	NBR	SBL	SBT	SBR
Lane Configurations												
Traffic Vol, veh/h	78	152	12	9	104	45	33	108	33	89	161	50
Future Vol, veh/h	78	152	12	9	104	45	33	108	33	89	161	50
Peak Hour Factor	0.86	0.86	0.86	0.86	0.86	0.86	0.65	0.65	0.65	0.85	0.85	0.85
Heavy Vehicles, %	2	2	2	2	2	2	2	2	2	2	2	2
Mvmt Flow	91	177	14	10	121	52	51	166	51	105	189	59
Number of Lanes	1	1	0	0	1	0	1	1	0	1	1	0

Approach	EB	WB	NB	SB
Opposing Approach	WB	EB	SB	NB
Opposing Lanes	1	2	2	2
Conflicting Approach Left	SB	NB	EB	WB
Conflicting Lanes Left	2	2	2	1
Conflicting Approach Right	NB	SB	WB	EB
Conflicting Lanes Right	2	2	1	2
HCM Control Delay	12.6	13.5	12.9	13.4
HCM LOS	B	B	B	B

Lane	NBLn1	NBLn2	EBLn1	EBLn2	WBLn1	SBLn1	SBLn2
Vol Left, %	100%	0%	100%	0%	6%	100%	0%
Vol Thru, %	0%	77%	0%	93%	66%	0%	76%
Vol Right, %	0%	23%	0%	7%	28%	0%	24%
Sign Control	Stop	Stop	Stop	Stop	Stop	Stop	Stop
Traffic Vol by Lane	33	141	78	164	158	89	211
LT Vol	33	0	78	0	9	89	0
Through Vol	0	108	0	152	104	0	161
RT Vol	0	33	0	12	45	0	50
Lane Flow Rate	51	217	91	191	184	105	248
Geometry Grp	7	7	7	7	6	7	7
Degree of Util (X)	0.101	0.391	0.183	0.354	0.346	0.205	0.438
Departure Headway (Hd)	7.171	6.493	7.245	6.684	6.78	7.032	6.353
Convergence, Y/N	Yes	Yes	Yes	Yes	Yes	Yes	Yes
Cap	497	551	492	534	525	508	563
Service Time	4.963	4.285	5.036	4.474	4.878	4.818	4.139
HCM Lane V/C Ratio	0.103	0.394	0.185	0.358	0.35	0.207	0.44
HCM Control Delay	10.8	13.4	11.7	13.1	13.5	11.6	14.1
HCM Lane LOS	B	B	B	B	B	B	B
HCM 95th-tile Q	0.3	1.8	0.7	1.6	1.5	0.8	2.2



Movement	EBL	EBT	EBR	WBL	WBT	WBR	NBL	NBT	NBR	SBL	SBT	SBR
Lane Configurations												
Traffic Volume (veh/h)	34	202	38	1	102	64	19	106	3	90	278	38
Future Volume (veh/h)	34	202	38	1	102	64	19	106	3	90	278	38
Initial Q (Qb), veh	0	0	0	0	0	0	0	0	0	0	0	0
Ped-Bike Adj(A_pbT)	0.99		0.95	0.99		0.95	1.00		0.95	1.00		0.96
Parking Bus, Adj	1.00	1.00	1.00	1.00	1.00	1.00	1.00	1.00	1.00	1.00	1.00	1.00
Work Zone On Approach		No			No			No			No	
Adj Sat Flow, veh/h/ln	1870	1870	1870	1870	1870	1870	1870	1870	1870	1870	1870	1870
Adj Flow Rate, veh/h	46	273	51	1	107	67	22	125	4	103	320	44
Peak Hour Factor	0.74	0.74	0.74	0.95	0.95	0.95	0.85	0.85	0.85	0.87	0.87	0.87
Percent Heavy Veh, %	2	2	2	2	2	2	2	2	2	2	2	2
Cap, veh/h	105	395	69	59	306	190	64	520	17	168	556	76
Arrive On Green	0.29	0.29	0.29	0.29	0.29	0.29	0.04	0.29	0.29	0.09	0.35	0.35
Sat Flow, veh/h	134	1364	239	2	1054	655	1781	1799	58	1781	1599	220
Grp Volume(v), veh/h	370	0	0	175	0	0	22	0	129	103	0	364
Grp Sat Flow(s),veh/h/ln	1737	0	0	1711	0	0	1781	0	1856	1781	0	1819
Q Serve(g_s), s	5.1	0.0	0.0	0.0	0.0	0.0	0.7	0.0	3.3	3.4	0.0	10.0
Cycle Q Clear(g_c), s	11.6	0.0	0.0	5.0	0.0	0.0	0.7	0.0	3.3	3.4	0.0	10.0
Prop In Lane	0.12		0.14	0.01		0.38	1.00		0.03	1.00		0.12
Lane Grp Cap(c), veh/h	569	0	0	555	0	0	64	0	537	168	0	633
V/C Ratio(X)	0.65	0.00	0.00	0.32	0.00	0.00	0.35	0.00	0.24	0.61	0.00	0.58
Avail Cap(c_a), veh/h	1744	0	0	1737	0	0	269	0	1463	616	0	1776
HCM Platoon Ratio	1.00	1.00	1.00	1.00	1.00	1.00	1.00	1.00	1.00	1.00	1.00	1.00
Upstream Filter(I)	1.00	0.00	0.00	1.00	0.00	0.00	1.00	0.00	1.00	1.00	0.00	1.00
Uniform Delay (d), s/veh	19.6	0.0	0.0	17.3	0.0	0.0	29.0	0.0	16.7	26.8	0.0	16.4
Incr Delay (d2), s/veh	1.3	0.0	0.0	0.3	0.0	0.0	1.2	0.0	1.1	1.4	0.0	3.8
Initial Q Delay(d3),s/veh	0.0	0.0	0.0	0.0	0.0	0.0	0.0	0.0	0.0	0.0	0.0	0.0
%ile BackOfQ(50%),veh/ln	4.5	0.0	0.0	1.9	0.0	0.0	0.3	0.0	1.4	1.4	0.0	4.2
Unsig. Movement Delay, s/veh												
LnGrp Delay(d),s/veh	20.8	0.0	0.0	17.6	0.0	0.0	30.2	0.0	17.8	28.2	0.0	20.1
LnGrp LOS	C	A	A	B	A	A	C	A	B	C	A	C
Approach Vol, veh/h		370			175			151			467	
Approach Delay, s/veh		20.8			17.6			19.6			21.9	
Approach LOS		C			B			B			C	

Timer - Assigned Phs	1	2		4	5	6		8
Phs Duration (G+Y+Rc), s	6.9	29.3		25.3	10.5	25.7		25.3
Change Period (Y+Rc), s	* 4.7	7.9		7.5	* 4.7	* 7.9		7.5
Max Green Setting (Gmax), s	* 9.3	60.1		60.5	* 21	* 49		60.5
Max Q Clear Time (g_c+I1), s	2.7	12.0		7.0	5.4	5.3		13.6
Green Ext Time (p_c), s	0.0	8.1		1.2	0.1	2.3		2.7

Intersection Summary	
HCM 6th Ctrl Delay	20.6
HCM 6th LOS	C

Notes

* HCM 6th computational engine requires equal clearance times for the phases crossing the barrier.

Intersection	
Int Delay, s/veh	2.4

Movement	EBL	EBT	EBR	WBL	WBT	WBR	NBL	NBT	NBR	SBL	SBT	SBR
Lane Configurations		⇕			⇕			⇕			⇕	
Traffic Vol, veh/h	14	282	0	0	163	34	0	0	0	55	0	10
Future Vol, veh/h	14	282	0	0	163	34	0	0	0	55	0	10
Conflicting Peds, #/hr	10	0	10	10	0	10	10	0	10	10	0	10
Sign Control	Free	Free	Free	Free	Free	Free	Stop	Stop	Stop	Stop	Stop	Stop
RT Channelized	-	-	None	-	-	None	-	-	None	-	-	None
Storage Length	-	-	-	-	-	-	-	-	-	-	-	-
Veh in Median Storage, #	-	0	-	-	0	-	-	0	-	-	0	-
Grade, %	-	0	-	-	0	-	-	0	-	-	0	-
Peak Hour Factor	82	82	82	95	95	95	92	92	92	68	68	68
Heavy Vehicles, %	2	2	2	2	2	2	2	2	2	2	2	2
Mvmt Flow	17	344	0	0	172	36	0	0	0	81	0	15

Major/Minor	Major1			Major2			Minor1			Minor2		
Conflicting Flow All	218	0	0	354	0	0	596	606	364	588	588	210
Stage 1	-	-	-	-	-	-	388	388	-	200	200	-
Stage 2	-	-	-	-	-	-	208	218	-	388	388	-
Critical Hdwy	4.12	-	-	4.12	-	-	7.12	6.52	6.22	7.12	6.52	6.22
Critical Hdwy Stg 1	-	-	-	-	-	-	6.12	5.52	-	6.12	5.52	-
Critical Hdwy Stg 2	-	-	-	-	-	-	6.12	5.52	-	6.12	5.52	-
Follow-up Hdwy	2.218	-	-	2.218	-	-	3.518	4.018	3.318	3.518	4.018	3.318
Pot Cap-1 Maneuver	1352	-	-	1205	-	-	415	411	681	421	421	830
Stage 1	-	-	-	-	-	-	636	609	-	802	736	-
Stage 2	-	-	-	-	-	-	794	723	-	636	609	-
Platoon blocked, %		-	-		-	-						
Mov Cap-1 Maneuver	1339	-	-	1194	-	-	395	396	668	408	406	814
Mov Cap-2 Maneuver	-	-	-	-	-	-	395	396	-	408	406	-
Stage 1	-	-	-	-	-	-	620	593	-	782	729	-
Stage 2	-	-	-	-	-	-	772	716	-	620	593	-

Approach	EB	WB	NB	SB
HCM Control Delay, s	0.4	0	0	15.4
HCM LOS			A	C

Minor Lane/Major Mvmt	NBLn1	EBL	EBT	EBR	WBL	WBT	WBR	SBLn1
Capacity (veh/h)	-	1339	-	-	1194	-	-	442
HCM Lane V/C Ratio	-	0.013	-	-	-	-	-	0.216
HCM Control Delay (s)	0	7.7	0	-	0	-	-	15.4
HCM Lane LOS	A	A	A	-	A	-	-	C
HCM 95th %tile Q(veh)	-	0	-	-	0	-	-	0.8

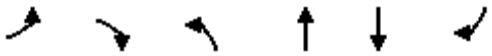

Movement	EBL	EBR	NBL	NBT	SBT	SBR
Lane Configurations						
Traffic Volume (veh/h)	78	264	139	355	468	49
Future Volume (veh/h)	78	264	139	355	468	49
Initial Q (Qb), veh	0	0	0	0	0	0
Ped-Bike Adj(A_pbT)	1.00	1.00	1.00			0.96
Parking Bus, Adj	1.00	1.00	1.00	1.00	1.00	1.00
Work Zone On Approach	No			No	No	
Adj Sat Flow, veh/h/ln	1870	1870	1870	1870	1870	1870
Adj Flow Rate, veh/h	100	338	149	382	503	53
Peak Hour Factor	0.78	0.78	0.93	0.93	0.93	0.93
Percent Heavy Veh, %	2	2	2	2	2	2
Cap, veh/h	415	546	199	1056	628	66
Arrive On Green	0.23	0.23	0.11	0.56	0.38	0.38
Sat Flow, veh/h	1781	1585	1781	1870	1655	174
Grp Volume(v), veh/h	100	338	149	382	0	556
Grp Sat Flow(s),veh/h/ln	1781	1585	1781	1870	0	1830
Q Serve(g_s), s	2.5	9.7	4.4	6.1	0.0	14.7
Cycle Q Clear(g_c), s	2.5	9.7	4.4	6.1	0.0	14.7
Prop In Lane	1.00	1.00	1.00			0.10
Lane Grp Cap(c), veh/h	415	546	199	1056	0	694
V/C Ratio(X)	0.24	0.62	0.75	0.36	0.00	0.80
Avail Cap(c_a), veh/h	655	760	1114	4094	0	2726
HCM Platoon Ratio	1.00	1.00	1.00	1.00	1.00	1.00
Upstream Filter(I)	1.00	1.00	1.00	1.00	0.00	1.00
Uniform Delay (d), s/veh	16.9	14.8	23.4	6.5	0.0	15.0
Incr Delay (d2), s/veh	0.3	1.1	5.5	0.2	0.0	2.2
Initial Q Delay(d3),s/veh	0.0	0.0	0.0	0.0	0.0	0.0
%ile BackOfQ(50%),veh/ln	1.0	8.6	1.9	1.6	0.0	5.3
Unsig. Movement Delay, s/veh						
LnGrp Delay(d),s/veh	17.2	16.0	28.9	6.7	0.0	17.2
LnGrp LOS	B	B	C	A	A	B
Approach Vol, veh/h	438			531	556	
Approach Delay, s/veh	16.3			12.9	17.2	
Approach LOS	B			B	B	

Timer - Assigned Phs		2		4	5	6
Phs Duration (G+Y+Rc), s		36.7		17.7	10.1	26.6
Change Period (Y+Rc), s		6.0		5.0	4.0	6.0
Max Green Setting (Gmax), s		119.0		20.0	34.0	81.0
Max Q Clear Time (g_c+I1), s		8.1		11.7	6.4	16.7
Green Ext Time (p_c), s		2.4		1.0	0.4	3.9

Intersection Summary		
HCM 6th Ctrl Delay		15.5
HCM 6th LOS		B



Movement	WBL	WBR	NBT	NBR	SBL	SBT
Lane Configurations						
Traffic Volume (veh/h)	24	47	409	23	38	493
Future Volume (veh/h)	24	47	409	23	38	493
Initial Q (Qb), veh	0	0	0	0	0	0
Ped-Bike Adj(A_pbT)	1.00	1.00		0.96	1.00	
Parking Bus, Adj	1.00	1.00	1.00	1.00	1.00	1.00
Work Zone On Approach	No		No			No
Adj Sat Flow, veh/h/ln	1870	1870	1870	1870	1870	1870
Adj Flow Rate, veh/h	29	57	449	25	40	519
Peak Hour Factor	0.83	0.83	0.91	0.91	0.95	0.95
Percent Heavy Veh, %	2	2	2	2	2	2
Cap, veh/h	151	209	666	37	84	1043
Arrive On Green	0.08	0.08	0.38	0.38	0.05	0.56
Sat Flow, veh/h	1781	1585	1750	97	1781	1870
Grp Volume(v), veh/h	29	57	0	474	40	519
Grp Sat Flow(s),veh/h/ln	1781	1585	0	1848	1781	1870
Q Serve(g_s), s	0.5	1.0	0.0	6.6	0.7	5.2
Cycle Q Clear(g_c), s	0.5	1.0	0.0	6.6	0.7	5.2
Prop In Lane	1.00	1.00		0.05	1.00	
Lane Grp Cap(c), veh/h	151	209	0	704	84	1043
V/C Ratio(X)	0.19	0.27	0.00	0.67	0.48	0.50
Avail Cap(c_a), veh/h	869	847	0	6126	1042	7539
HCM Platoon Ratio	1.00	1.00	1.00	1.00	1.00	1.00
Upstream Filter(I)	1.00	1.00	0.00	1.00	1.00	1.00
Uniform Delay (d), s/veh	13.1	12.0	0.0	7.9	14.3	4.2
Incr Delay (d2), s/veh	0.6	0.7	0.0	1.1	4.2	0.4
Initial Q Delay(d3),s/veh	0.0	0.0	0.0	0.0	0.0	0.0
%ile BackOfQ(50%),veh/ln	0.2	0.3	0.0	1.5	0.3	0.4
Unsig. Movement Delay, s/veh						
LnGrp Delay(d),s/veh	13.7	12.7	0.0	9.1	18.5	4.5
LnGrp LOS	B	B	A	A	B	A
Approach Vol, veh/h	86		474			559
Approach Delay, s/veh	13.1		9.1			5.5
Approach LOS	B		A			A

Timer - Assigned Phs	1	2			6	8
Phs Duration (G+Y+Rc), s	5.4	17.7			23.2	7.6
Change Period (Y+Rc), s	4.0	6.0			6.0	5.0
Max Green Setting (Gmax), s	18.0	102.0			124.0	15.0
Max Q Clear Time (g_c+I1), s	2.7	8.6			7.2	3.0
Green Ext Time (p_c), s	0.0	3.1			3.5	0.1

Intersection Summary	
HCM 6th Ctrl Delay	7.6
HCM 6th LOS	A



Movement	EBL	EBT	EBR	WBL	WBT	WBR	NBL	NBT	NBR	SBL	SBT	SBR
Lane Configurations												
Traffic Volume (veh/h)	3	67	1	32	65	145	2	6	9	225	24	2
Future Volume (veh/h)	3	67	1	32	65	145	2	6	9	225	24	2
Initial Q (Qb), veh	0	0	0	0	0	0	0	0	0	0	0	0
Ped-Bike Adj(A_pbT)	1.00		0.87	1.00		0.92	0.99		0.98	1.00		0.97
Parking Bus, Adj	1.00	1.00	1.00	1.00	1.00	1.00	1.00	1.00	1.00	1.00	1.00	1.00
Work Zone On Approach		No			No			No			No	
Adj Sat Flow, veh/h/ln	1870	1870	1870	1870	1870	1870	1870	1870	1870	1870	1870	1870
Adj Flow Rate, veh/h	3	76	1	34	70	156	4	11	17	250	27	2
Peak Hour Factor	0.88	0.88	0.88	0.93	0.93	0.93	0.53	0.53	0.53	0.90	0.90	0.90
Percent Heavy Veh, %	2	2	2	2	2	2	2	2	2	2	2	2
Cap, veh/h	5	136	2	83	171	200	137	375	539	923	1065	79
Arrive On Green	0.08	0.08	0.08	0.14	0.14	0.14	0.62	0.62	0.62	0.62	0.62	0.62
Sat Flow, veh/h	70	1766	23	602	1239	1456	161	605	868	1376	1715	127
Grp Volume(v), veh/h	80	0	0	104	0	156	32	0	0	250	0	29
Grp Sat Flow(s),veh/h/ln	1859	0	0	1840	0	1456	1634	0	0	1376	0	1842
Q Serve(g_s), s	4.5	0.0	0.0	5.7	0.0	11.3	0.0	0.0	0.0	8.1	0.0	0.7
Cycle Q Clear(g_c), s	4.5	0.0	0.0	5.7	0.0	11.3	0.8	0.0	0.0	8.9	0.0	0.7
Prop In Lane	0.04		0.01	0.33		1.00	0.12		0.53	1.00		0.07
Lane Grp Cap(c), veh/h	143	0	0	253	0	200	1051	0	0	923	0	1144
V/C Ratio(X)	0.56	0.00	0.00	0.41	0.00	0.78	0.03	0.00	0.00	0.27	0.00	0.03
Avail Cap(c_a), veh/h	492	0	0	588	0	465	1051	0	0	923	0	1144
HCM Platoon Ratio	1.00	1.00	1.00	1.00	1.00	1.00	1.00	1.00	1.00	1.00	1.00	1.00
Upstream Filter(I)	1.00	0.00	0.00	1.00	0.00	1.00	1.00	0.00	0.00	1.00	0.00	1.00
Uniform Delay (d), s/veh	48.7	0.0	0.0	43.2	0.0	45.6	8.0	0.0	0.0	9.5	0.0	8.0
Incr Delay (d2), s/veh	1.3	0.0	0.0	0.4	0.0	2.5	0.1	0.0	0.0	0.7	0.0	0.0
Initial Q Delay(d3),s/veh	0.0	0.0	0.0	0.0	0.0	0.0	0.0	0.0	0.0	0.0	0.0	0.0
%ile BackOfQ(50%),veh/ln	2.2	0.0	0.0	2.5	0.0	4.1	0.3	0.0	0.0	2.8	0.0	0.3
Unsig. Movement Delay, s/veh												
LnGrp Delay(d),s/veh	50.0	0.0	0.0	43.6	0.0	48.1	8.1	0.0	0.0	10.2	0.0	8.0
LnGrp LOS	D	A	A	D	A	D	A	A	A	B	A	A
Approach Vol, veh/h		80			260			32			279	
Approach Delay, s/veh		50.0			46.3			8.1			10.0	
Approach LOS		D			D			A			B	

Timer - Assigned Phs	2	4	6	8
Phs Duration (G+Y+Rc), s	74.0	14.4	74.0	21.1
Change Period (Y+Rc), s	6.0	6.0	6.0	6.0
Max Green Setting (Gmax), s	68.0	29.0	68.0	35.0
Max Q Clear Time (g_c+I1), s	2.8	6.5	10.9	13.3
Green Ext Time (p_c), s	0.0	0.2	2.4	0.6

Intersection Summary		
HCM 6th Ctrl Delay	29.3	
HCM 6th LOS	C	



Movement	EBL	EBT	EBR	WBL	WBT	WBR	NBL	NBT	NBR	SBL	SBT	SBR
Lane Configurations												
Traffic Volume (veh/h)	20	38	248	5	23	13	170	989	6	48	1476	48
Future Volume (veh/h)	20	38	248	5	23	13	170	989	6	48	1476	48
Initial Q (Qb), veh	0	0	0	0	0	0	0	0	0	0	0	0
Ped-Bike Adj(A_pbT)	1.00		0.94	1.00		0.96	1.00		0.96	1.00		0.98
Parking Bus, Adj	1.00	1.00	1.00	1.00	1.00	1.00	1.00	1.00	1.00	1.00	1.00	1.00
Work Zone On Approach		No			No			No			No	
Adj Sat Flow, veh/h/ln	1870	1870	1870	1870	1870	1870	1870	1870	1870	1870	1870	1870
Adj Flow Rate, veh/h	21	40	264	6	29	16	183	1063	6	51	1570	51
Peak Hour Factor	0.94	0.94	0.94	0.79	0.79	0.79	0.93	0.93	0.93	0.94	0.94	0.94
Percent Heavy Veh, %	2	2	2	2	2	2	2	2	2	2	2	2
Cap, veh/h	75	369	750	27	319	259	289	1774	10	122	1686	802
Arrive On Green	0.04	0.20	0.20	0.02	0.17	0.17	0.08	0.49	0.49	0.07	0.47	0.47
Sat Flow, veh/h	1781	1870	2614	1781	1870	1519	3456	3622	20	1781	3554	1549
Grp Volume(v), veh/h	21	40	264	6	29	16	183	521	548	51	1570	51
Grp Sat Flow(s),veh/h/ln	1781	1870	1307	1781	1870	1519	1728	1777	1866	1781	1777	1549
Q Serve(g_s), s	1.4	2.1	9.6	0.4	1.6	1.1	6.1	25.2	25.2	3.3	49.5	2.0
Cycle Q Clear(g_c), s	1.4	2.1	9.6	0.4	1.6	1.1	6.1	25.2	25.2	3.3	49.5	2.0
Prop In Lane	1.00		1.00	1.00		1.00	1.00		0.01	1.00		1.00
Lane Grp Cap(c), veh/h	75	369	750	27	319	259	289	870	914	122	1686	802
V/C Ratio(X)	0.28	0.11	0.35	0.22	0.09	0.06	0.63	0.60	0.60	0.42	0.93	0.06
Avail Cap(c_a), veh/h	150	722	1243	150	722	586	290	870	914	150	1692	804
HCM Platoon Ratio	1.00	1.00	1.00	1.00	1.00	1.00	1.00	1.00	1.00	1.00	1.00	1.00
Upstream Filter(I)	1.00	1.00	1.00	1.00	1.00	1.00	1.00	1.00	1.00	1.00	1.00	1.00
Uniform Delay (d), s/veh	55.3	39.2	34.2	58.0	41.6	41.4	52.8	21.9	21.9	53.2	29.5	14.4
Incr Delay (d2), s/veh	0.7	0.3	0.6	1.5	0.3	0.2	3.4	3.0	2.9	0.8	10.7	0.2
Initial Q Delay(d3),s/veh	0.0	0.0	0.0	0.0	0.0	0.0	0.0	0.0	0.0	0.0	0.0	0.0
%ile BackOfQ(50%),veh/ln	0.6	1.0	3.1	0.2	0.7	0.4	2.7	10.2	10.7	1.4	21.3	0.7
Unsig. Movement Delay, s/veh												
LnGrp Delay(d),s/veh	56.1	39.5	34.8	59.5	41.9	41.6	56.2	25.0	24.8	54.1	40.2	14.5
LnGrp LOS	E	D	C	E	D	D	E	C	C	D	D	B
Approach Vol, veh/h		325			51			1252			1672	
Approach Delay, s/veh		36.8			43.9			29.5			39.8	
Approach LOS		D			D			C			D	

Timer - Assigned Phs	1	2	3	4	5	6	7	8
Phs Duration (G+Y+Rc), s	13.9	66.7	7.5	31.0	15.7	64.9	10.7	27.8
Change Period (Y+Rc), s	* 5.7	* 8.4	* 5.7	7.5	* 5.7	* 8.4	* 5.7	7.5
Max Green Setting (Gmax), s	* 8	* 57	* 10	46.0	* 10	* 57	* 10	46.0
Max Q Clear Time (g_c+I1), s	5.3	27.2	2.4	11.6	8.1	51.5	3.4	3.6
Green Ext Time (p_c), s	0.0	19.8	0.0	2.9	0.1	5.0	0.0	0.4

Intersection Summary	
HCM 6th Ctrl Delay	35.7
HCM 6th LOS	D

Notes

* HCM 6th computational engine requires equal clearance times for the phases crossing the barrier.

Intersection	
Int Delay, s/veh	1.9

Movement	EBL	EBR	NBL	NBT	SBT	SBR
Lane Configurations						
Traffic Vol, veh/h	46	19	24	494	679	53
Future Vol, veh/h	46	19	24	494	679	53
Conflicting Peds, #/hr	10	10	10	0	0	10
Sign Control	Stop	Stop	Free	Free	Free	Free
RT Channelized	-	None	-	None	-	None
Storage Length	0	-	410	-	-	80
Veh in Median Storage, #	0	-	-	0	0	-
Grade, %	0	-	-	0	0	-
Peak Hour Factor	92	92	92	92	92	92
Heavy Vehicles, %	2	2	2	2	2	2
Mvmt Flow	50	21	26	537	738	58

Major/Minor	Minor2		Major1		Major2	
Conflicting Flow All	1347	758	806	0	-	0
Stage 1	748	-	-	-	-	-
Stage 2	599	-	-	-	-	-
Critical Hdwy	6.42	6.22	4.12	-	-	-
Critical Hdwy Stg 1	5.42	-	-	-	-	-
Critical Hdwy Stg 2	5.42	-	-	-	-	-
Follow-up Hdwy	3.518	3.318	2.218	-	-	-
Pot Cap-1 Maneuver	167	407	819	-	-	-
Stage 1	468	-	-	-	-	-
Stage 2	549	-	-	-	-	-
Platoon blocked, %				-	-	-
Mov Cap-1 Maneuver	158	399	811	-	-	-
Mov Cap-2 Maneuver	158	-	-	-	-	-
Stage 1	448	-	-	-	-	-
Stage 2	544	-	-	-	-	-

Approach	EB	NB	SB
HCM Control Delay, s	34.3	0.4	0
HCM LOS	D		

Minor Lane/Major Mvmt	NBL	NBT	EBLn1	SBT	SBR
Capacity (veh/h)	811	-	192	-	-
HCM Lane V/C Ratio	0.032	-	0.368	-	-
HCM Control Delay (s)	9.6	-	34.3	-	-
HCM Lane LOS	A	-	D	-	-
HCM 95th %tile Q(veh)	0.1	-	1.6	-	-

Movement	EBL	EBT	EBR	WBL	WBT	WBR	NBL	NBT	NBR	SBL	SBT	SBR
Lane Configurations												
Traffic Volume (veh/h)	91	32	38	49	39	97	48	254	20	139	302	106
Future Volume (veh/h)	91	32	38	49	39	97	48	254	20	139	302	106
Initial Q (Qb), veh	0	0	0	0	0	0	0	0	0	0	0	0
Ped-Bike Adj(A_pbT)	1.00		0.97	1.00		0.94	1.00		0.97	1.00		0.97
Parking Bus, Adj	1.00	1.00	1.00	1.00	1.00	1.00	1.00	1.00	1.00	1.00	1.00	1.00
Work Zone On Approach		No			No			No			No	
Adj Sat Flow, veh/h/ln	1870	1870	1870	1870	1870	1870	1870	1870	1870	1870	1870	1870
Adj Flow Rate, veh/h	123	43	51	73	58	145	56	299	24	146	318	112
Peak Hour Factor	0.74	0.74	0.74	0.67	0.67	0.67	0.85	0.85	0.85	0.95	0.95	0.95
Percent Heavy Veh, %	2	2	2	2	2	2	2	2	2	2	2	2
Cap, veh/h	260	422	345	215	376	298	205	429	34	245	705	243
Arrive On Green	0.15	0.23	0.23	0.12	0.20	0.20	0.12	0.25	0.25	0.14	0.27	0.27
Sat Flow, veh/h	1781	1870	1530	1781	1870	1486	1781	1704	137	1781	2570	885
Grp Volume(v), veh/h	123	43	51	73	58	145	56	0	323	146	218	212
Grp Sat Flow(s),veh/h/ln	1781	1870	1530	1781	1870	1486	1781	0	1840	1781	1777	1678
Q Serve(g_s), s	4.3	1.2	1.8	2.6	1.7	5.9	2.0	0.0	10.9	5.2	6.9	7.2
Cycle Q Clear(g_c), s	4.3	1.2	1.8	2.6	1.7	5.9	2.0	0.0	10.9	5.2	6.9	7.2
Prop In Lane	1.00		1.00	1.00		1.00	1.00		0.07	1.00		0.53
Lane Grp Cap(c), veh/h	260	422	345	215	376	298	205	0	463	245	487	460
V/C Ratio(X)	0.47	0.10	0.15	0.34	0.15	0.49	0.27	0.00	0.70	0.60	0.45	0.46
Avail Cap(c_a), veh/h	392	961	786	288	851	676	314	0	1027	471	1148	1084
HCM Platoon Ratio	1.00	1.00	1.00	1.00	1.00	1.00	1.00	1.00	1.00	1.00	1.00	1.00
Upstream Filter(I)	1.00	1.00	1.00	1.00	1.00	1.00	1.00	0.00	1.00	1.00	1.00	1.00
Uniform Delay (d), s/veh	26.7	20.9	21.1	27.4	22.5	24.1	27.5	0.0	23.1	27.6	20.5	20.5
Incr Delay (d2), s/veh	0.5	0.1	0.3	0.3	0.3	1.7	0.3	0.0	2.7	0.9	0.9	1.0
Initial Q Delay(d3),s/veh	0.0	0.0	0.0	0.0	0.0	0.0	0.0	0.0	0.0	0.0	0.0	0.0
%ile BackOfQ(50%),veh/ln	1.8	0.5	0.6	1.1	0.8	2.1	0.8	0.0	4.6	2.2	2.8	2.7
Unsig. Movement Delay, s/veh												
LnGrp Delay(d),s/veh	27.2	21.1	21.4	27.8	22.7	25.9	27.8	0.0	25.8	28.5	21.4	21.6
LnGrp LOS	C	C	C	C	C	C	C	A	C	C	C	C
Approach Vol, veh/h		217			276			379			576	
Approach Delay, s/veh		24.6			25.7			26.1			23.2	
Approach LOS		C			C			C			C	

Timer - Assigned Phs	1	2	3	4	5	6	7	8
Phs Duration (G+Y+Rc), s	13.4	23.2	12.2	19.4	11.8	24.7	13.9	17.7
Change Period (Y+Rc), s	4.0	6.0	4.0	4.0	4.0	6.0	4.0	4.0
Max Green Setting (Gmax), s	18.0	38.0	11.0	35.0	12.0	44.0	15.0	31.0
Max Q Clear Time (g_c+I1), s	7.2	12.9	4.6	3.8	4.0	9.2	6.3	7.9
Green Ext Time (p_c), s	0.1	2.6	0.0	0.6	0.0	4.0	0.1	1.2

Intersection Summary	
HCM 6th Ctrl Delay	24.7
HCM 6th LOS	C

Intersection	
Intersection Delay, s/veh	32.5
Intersection LOS	D

Movement	EBL	EBT	EBR	WBL	WBT	WBR	NBL	NBT	NBR	SBL	SBT	SBR
Lane Configurations												
Traffic Vol, veh/h	22	175	214	14	93	182	72	146	16	187	226	15
Future Vol, veh/h	22	175	214	14	93	182	72	146	16	187	226	15
Peak Hour Factor	0.83	0.83	0.83	0.90	0.90	0.90	0.89	0.89	0.89	0.91	0.91	0.91
Heavy Vehicles, %	2	2	2	2	2	2	2	2	2	2	2	2
Mvmt Flow	27	211	258	16	103	202	81	164	18	205	248	16
Number of Lanes	0	1	1	0	1	1	0	1	0	0	1	0

Approach	EB	WB	NB	SB
Opposing Approach	WB	EB	SB	NB
Opposing Lanes	2	2	1	1
Conflicting Approach Left	SB	NB	EB	WB
Conflicting Lanes Left	1	1	2	2
Conflicting Approach Right	NB	SB	WB	EB
Conflicting Lanes Right	1	1	2	2
HCM Control Delay	19.9	16.2	22.5	62.6
HCM LOS	C	C	C	F

Lane	NBLn1	EBLn1	EBLn2	WBLn1	WBLn2	SBLn1
Vol Left, %	31%	11%	0%	13%	0%	44%
Vol Thru, %	62%	89%	0%	87%	0%	53%
Vol Right, %	7%	0%	100%	0%	100%	4%
Sign Control	Stop	Stop	Stop	Stop	Stop	Stop
Traffic Vol by Lane	234	197	214	107	182	428
LT Vol	72	22	0	14	0	187
Through Vol	146	175	0	93	0	226
RT Vol	16	0	214	0	182	15
Lane Flow Rate	263	237	258	119	202	470
Geometry Grp	2	7	7	7	7	2
Degree of Util (X)	0.594	0.549	0.541	0.287	0.444	0.975
Departure Headway (Hd)	8.138	8.333	7.547	8.698	7.899	7.466
Convergence, Y/N	Yes	Yes	Yes	Yes	Yes	Yes
Cap	442	432	477	413	455	484
Service Time	6.216	6.102	5.316	6.47	5.671	5.527
HCM Lane V/C Ratio	0.595	0.549	0.541	0.288	0.444	0.971
HCM Control Delay	22.5	20.9	18.9	15	16.9	62.6
HCM Lane LOS	C	C	C	B	C	F
HCM 95th-tile Q	3.8	3.2	3.2	1.2	2.2	12.5

Intersection	
Int Delay, s/veh	1

Movement	EBL	EBT	EBR	WBL	WBT	WBR	NBL	NBT	NBR	SBL	SBT	SBR
Lane Configurations		⇕			⇕			⇕			⇕	
Traffic Vol, veh/h	3	298	14	5	236	1	5	2	1	2	2	2
Future Vol, veh/h	3	298	14	5	236	1	5	2	1	2	2	2
Conflicting Peds, #/hr	10	0	10	10	0	10	10	0	10	10	0	10
Sign Control	Free	Free	Free	Free	Free	Free	Stop	Stop	Stop	Stop	Stop	Stop
RT Channelized	-	-	None	-	-	None	-	-	None	-	-	None
Storage Length	-	-	-	-	-	-	-	-	-	-	-	-
Veh in Median Storage, #	-	0	-	-	0	-	-	0	-	-	0	-
Grade, %	-	0	-	-	0	-	-	0	-	-	0	-
Peak Hour Factor	85	85	85	87	87	87	50	50	50	25	25	25
Heavy Vehicles, %	2	2	2	2	2	2	2	2	2	2	2	2
Mvmt Flow	4	351	16	6	271	1	10	4	2	8	8	8

Major/Minor	Major1			Major2			Minor1			Minor2		
Conflicting Flow All	282	0	0	377	0	0	679	671	379	674	679	292
Stage 1	-	-	-	-	-	-	377	377	-	294	294	-
Stage 2	-	-	-	-	-	-	302	294	-	380	385	-
Critical Hdwy	4.12	-	-	4.12	-	-	7.12	6.52	6.22	7.12	6.52	6.22
Critical Hdwy Stg 1	-	-	-	-	-	-	6.12	5.52	-	6.12	5.52	-
Critical Hdwy Stg 2	-	-	-	-	-	-	6.12	5.52	-	6.12	5.52	-
Follow-up Hdwy	2.218	-	-	2.218	-	-	3.518	4.018	3.318	3.518	4.018	3.318
Pot Cap-1 Maneuver	1280	-	-	1181	-	-	366	378	668	368	374	747
Stage 1	-	-	-	-	-	-	644	616	-	714	670	-
Stage 2	-	-	-	-	-	-	707	670	-	642	611	-
Platoon blocked, %		-	-		-	-						
Mov Cap-1 Maneuver	1268	-	-	1170	-	-	347	367	655	354	363	733
Mov Cap-2 Maneuver	-	-	-	-	-	-	347	367	-	354	363	-
Stage 1	-	-	-	-	-	-	636	607	-	705	659	-
Stage 2	-	-	-	-	-	-	680	659	-	627	602	-

Approach	EB	WB	NB	SB
HCM Control Delay, s	0.1	0.2	15.1	13.8
HCM LOS			C	B

Minor Lane/Major Mvmt	NBLn1	EBL	EBT	EBR	WBL	WBT	WBR	SBLn1
Capacity (veh/h)	374	1268	-	-	1170	-	-	432
HCM Lane V/C Ratio	0.043	0.003	-	-	0.005	-	-	0.056
HCM Control Delay (s)	15.1	7.8	0	-	8.1	0	-	13.8
HCM Lane LOS	C	A	A	-	A	A	-	B
HCM 95th %tile Q(veh)	0.1	0	-	-	0	-	-	0.2

APPENDIX E

YEAR 2027 + PROJECT PHASE 1 INTERSECTION ANALYSIS WORKSHEETS

Movement	EBL	EBT	EBR	WBL	WBT	WBR	NBL	NBT	NBR	SBL	SBT	SBR
Lane Configurations												
Traffic Volume (veh/h)	104	220	192	90	229	64	126	755	82	91	533	96
Future Volume (veh/h)	104	220	192	90	229	64	126	755	82	91	533	96
Initial Q (Qb), veh	0	0	0	0	0	0	0	0	0	0	0	0
Ped-Bike Adj(A_pbT)	1.00		0.97	1.00		0.97	1.00		0.96	1.00		0.96
Parking Bus, Adj	1.00	1.00	1.00	1.00	1.00	1.00	1.00	1.00	1.00	1.00	1.00	1.00
Work Zone On Approach		No			No			No			No	
Adj Sat Flow, veh/h/ln	1870	1870	1870	1870	1870	1870	1870	1870	1870	1870	1870	1870
Adj Flow Rate, veh/h	146	310	270	141	358	100	162	968	105	134	784	141
Peak Hour Factor	0.71	0.71	0.71	0.64	0.64	0.64	0.78	0.78	0.78	0.68	0.68	0.68
Percent Heavy Veh, %	2	2	2	2	2	2	2	2	2	2	2	2
Cap, veh/h	172	424	347	167	419	343	188	1302	141	160	1160	209
Arrive On Green	0.10	0.23	0.23	0.09	0.22	0.22	0.11	0.40	0.40	0.09	0.39	0.39
Sat Flow, veh/h	1781	1870	1530	1781	1870	1530	1781	3218	349	1781	2986	537
Grp Volume(v), veh/h	146	310	270	141	358	100	162	534	539	134	467	458
Grp Sat Flow(s),veh/h/ln	1781	1870	1530	1781	1870	1530	1781	1777	1790	1781	1777	1746
Q Serve(g_s), s	9.8	18.7	20.2	9.5	22.4	6.6	10.9	31.3	31.3	9.0	26.6	26.6
Cycle Q Clear(g_c), s	9.8	18.7	20.2	9.5	22.4	6.6	10.9	31.3	31.3	9.0	26.6	26.6
Prop In Lane	1.00		1.00	1.00		1.00	1.00		0.19	1.00		0.31
Lane Grp Cap(c), veh/h	172	424	347	167	419	343	188	719	724	160	690	678
V/C Ratio(X)	0.85	0.73	0.78	0.84	0.85	0.29	0.86	0.74	0.74	0.84	0.68	0.68
Avail Cap(c_a), veh/h	201	497	406	197	492	403	216	719	724	181	690	678
HCM Platoon Ratio	1.00	1.00	1.00	1.00	1.00	1.00	1.00	1.00	1.00	1.00	1.00	1.00
Upstream Filter(I)	1.00	1.00	1.00	0.60	0.60	0.60	0.62	0.62	0.62	1.00	1.00	1.00
Uniform Delay (d), s/veh	54.2	43.7	44.3	54.4	45.4	39.3	53.7	30.9	30.9	54.7	30.9	30.9
Incr Delay (d2), s/veh	21.8	3.5	6.5	13.9	6.8	0.1	15.7	4.3	4.3	23.2	5.3	5.3
Initial Q Delay(d3),s/veh	0.0	0.0	0.0	0.0	0.0	0.0	0.0	0.0	0.0	0.0	0.0	0.0
%ile BackOfQ(50%),veh/ln	5.4	9.0	8.2	4.9	11.1	2.5	5.7	14.1	14.2	5.1	12.3	12.1
Unsig. Movement Delay, s/veh												
LnGrp Delay(d),s/veh	76.1	47.2	50.8	68.3	52.3	39.4	69.4	35.3	35.3	77.9	36.2	36.3
LnGrp LOS	E	D	D	E	D	D	E	D	D	E	D	D
Approach Vol, veh/h		726			599			1235			1059	
Approach Delay, s/veh		54.3			53.9			39.7			41.5	
Approach LOS		D			D			D			D	

Timer - Assigned Phs	1	2	3	4	5	6	7	8
Phs Duration (G+Y+Rc), s	16.5	55.0	17.0	33.4	18.5	53.1	17.4	33.0
Change Period (Y+Rc), s	5.6	5.7	5.6	5.7	5.6	5.7	5.6	5.7
Max Green Setting (Gmax), s	12.4	41.1	13.5	32.4	14.8	38.7	13.8	32.1
Max Q Clear Time (g_c+I1), s	11.0	33.3	11.5	22.2	12.9	28.6	11.8	24.4
Green Ext Time (p_c), s	0.0	3.1	0.0	1.3	0.0	3.1	0.0	1.0

Intersection Summary	
HCM 6th Ctrl Delay	45.5
HCM 6th LOS	D



Movement	EBL	EBT	EBR	WBL	WBT	WBR	NBL	NBT	NBR	SBL	SBT	SBR
Lane Configurations												
Traffic Volume (veh/h)	75	242	81	19	250	19	132	585	26	66	380	86
Future Volume (veh/h)	75	242	81	19	250	19	132	585	26	66	380	86
Initial Q (Qb), veh	0	0	0	0	0	0	0	0	0	0	0	0
Ped-Bike Adj(A_pbT)	1.00		0.98	0.99		0.97	1.00		0.95	1.00		0.95
Parking Bus, Adj	1.00	1.00	1.00	1.00	1.00	1.00	1.00	1.00	1.00	1.00	1.00	1.00
Work Zone On Approach		No			No			No			No	
Adj Sat Flow, veh/h/ln	1870	1870	1870	1870	1870	1870	1870	1870	1870	1870	1870	1870
Adj Flow Rate, veh/h	110	356	119	27	357	27	176	780	35	99	567	128
Peak Hour Factor	0.68	0.68	0.68	0.70	0.70	0.70	0.75	0.75	0.75	0.67	0.67	0.67
Percent Heavy Veh, %	2	2	2	2	2	2	2	2	2	2	2	2
Cap, veh/h	210	590	197	67	442	32	219	1103	49	128	764	172
Arrive On Green	0.12	0.44	0.44	0.28	0.28	0.28	0.12	0.32	0.32	0.07	0.27	0.27
Sat Flow, veh/h	1781	1332	445	62	1601	117	1781	3455	155	1781	2850	641
Grp Volume(v), veh/h	110	0	475	411	0	0	176	401	414	99	353	342
Grp Sat Flow(s),veh/h/ln	1781	0	1777	1780	0	0	1781	1777	1833	1781	1777	1714
Q Serve(g_s), s	4.4	0.0	15.6	6.9	0.0	0.0	7.4	15.2	15.2	4.2	13.9	14.0
Cycle Q Clear(g_c), s	4.4	0.0	15.6	16.4	0.0	0.0	7.4	15.2	15.2	4.2	13.9	14.0
Prop In Lane	1.00		0.25	0.07		0.07	1.00		0.08	1.00		0.37
Lane Grp Cap(c), veh/h	210	0	787	542	0	0	219	567	585	128	477	460
V/C Ratio(X)	0.52	0.00	0.60	0.76	0.00	0.00	0.80	0.71	0.71	0.77	0.74	0.74
Avail Cap(c_a), veh/h	310	0	1289	934	0	0	426	908	937	296	778	750
HCM Platoon Ratio	1.00	1.00	1.00	1.00	1.00	1.00	1.00	1.00	1.00	1.00	1.00	1.00
Upstream Filter(I)	1.00	0.00	1.00	1.00	0.00	0.00	1.00	1.00	1.00	1.00	1.00	1.00
Uniform Delay (d), s/veh	31.7	0.0	16.2	25.9	0.0	0.0	32.6	22.9	22.9	34.9	25.6	25.6
Incr Delay (d2), s/veh	2.0	0.0	0.8	2.2	0.0	0.0	6.7	1.6	1.6	9.3	2.3	2.4
Initial Q Delay(d3),s/veh	0.0	0.0	0.0	0.0	0.0	0.0	0.0	0.0	0.0	0.0	0.0	0.0
%ile BackOfQ(50%),veh/ln	2.0	0.0	5.8	6.9	0.0	0.0	3.5	6.2	6.4	2.1	5.9	5.7
Unsig. Movement Delay, s/veh												
LnGrp Delay(d),s/veh	33.7	0.0	17.0	28.1	0.0	0.0	39.3	24.5	24.5	44.2	27.8	28.0
LnGrp LOS	C	A	B	C	A	A	D	C	C	D	C	C
Approach Vol, veh/h		585			411			991			794	
Approach Delay, s/veh		20.1			28.1			27.1			30.0	
Approach LOS		C			C			C			C	

Timer - Assigned Phs	1	2		4	5	6	7	8
Phs Duration (G+Y+Rc), s	9.2	28.9		38.4	13.1	25.0	12.7	25.6
Change Period (Y+Rc), s	3.7	4.5		4.5	3.7	4.5	3.7	4.5
Max Green Setting (Gmax), s	12.7	39.1		55.5	18.3	33.5	13.3	38.5
Max Q Clear Time (g_c+I1), s	6.2	17.2		17.6	9.4	16.0	6.4	18.4
Green Ext Time (p_c), s	0.1	5.4		3.3	0.3	4.2	0.1	2.5

Intersection Summary	
HCM 6th Ctrl Delay	26.6
HCM 6th LOS	C



Movement	EBL	EBT	EBR	WBL	WBT	WBR	NBL	NBT	NBR	SBL	SBT	SBR
Lane Configurations												
Traffic Volume (veh/h)	42	182	67	81	130	190	38	581	90	112	455	15
Future Volume (veh/h)	42	182	67	81	130	190	38	581	90	112	455	15
Initial Q (Qb), veh	0	0	0	0	0	0	0	0	0	0	0	0
Ped-Bike Adj(A_pbT)	1.00		0.97	1.00		0.96	1.00		0.95	1.00		0.95
Parking Bus, Adj	1.00	1.00	1.00	1.00	1.00	1.00	1.00	1.00	1.00	1.00	1.00	1.00
Work Zone On Approach		No			No			No			No	
Adj Sat Flow, veh/h/ln	1870	1870	1870	1870	1870	1870	1870	1870	1870	1870	1870	1870
Adj Flow Rate, veh/h	54	233	86	99	159	232	43	660	102	135	548	18
Peak Hour Factor	0.78	0.78	0.78	0.82	0.82	0.82	0.88	0.88	0.88	0.83	0.83	0.83
Percent Heavy Veh, %	2	2	2	2	2	2	2	2	2	2	2	2
Cap, veh/h	62	269	99	139	224	302	67	843	130	161	1150	38
Arrive On Green	0.24	0.24	0.24	0.20	0.20	0.20	0.04	0.28	0.28	0.09	0.33	0.33
Sat Flow, veh/h	256	1104	408	704	1131	1525	1781	3060	472	1781	3505	115
Grp Volume(v), veh/h	373	0	0	258	0	232	43	383	379	135	277	289
Grp Sat Flow(s),veh/h/ln	1768	0	0	1835	0	1525	1781	1777	1755	1781	1777	1843
Q Serve(g_s), s	24.5	0.0	0.0	15.9	0.0	17.4	2.9	24.1	24.2	9.0	15.1	15.1
Cycle Q Clear(g_c), s	24.5	0.0	0.0	15.9	0.0	17.4	2.9	24.1	24.2	9.0	15.1	15.1
Prop In Lane	0.14		0.23	0.38		1.00	1.00		0.27	1.00		0.06
Lane Grp Cap(c), veh/h	431	0	0	363	0	302	67	490	484	161	583	605
V/C Ratio(X)	0.87	0.00	0.00	0.71	0.00	0.77	0.64	0.78	0.78	0.84	0.48	0.48
Avail Cap(c_a), veh/h	540	0	0	560	0	466	131	548	542	225	642	666
HCM Platoon Ratio	1.00	1.00	1.00	1.00	1.00	1.00	1.00	1.00	1.00	1.00	1.00	1.00
Upstream Filter(I)	1.00	0.00	0.00	1.00	0.00	1.00	1.00	1.00	1.00	1.00	1.00	1.00
Uniform Delay (d), s/veh	43.9	0.0	0.0	45.4	0.0	46.0	57.5	40.5	40.6	54.2	32.4	32.4
Incr Delay (d2), s/veh	11.7	0.0	0.0	2.6	0.0	4.1	3.7	10.4	10.6	12.9	2.2	2.1
Initial Q Delay(d3),s/veh	0.0	0.0	0.0	0.0	0.0	0.0	0.0	0.0	0.0	0.0	0.0	0.0
%ile BackOfQ(50%),veh/ln	12.0	0.0	0.0	7.4	0.0	6.9	1.3	11.7	11.6	4.6	6.7	7.0
Unsig. Movement Delay, s/veh												
LnGrp Delay(d),s/veh	55.6	0.0	0.0	47.9	0.0	50.1	61.2	50.9	51.2	67.1	34.6	34.5
LnGrp LOS	E	A	A	D	A	D	E	D	D	E	C	C
Approach Vol, veh/h		373			490			805			701	
Approach Delay, s/veh		55.6			48.9			51.6			40.8	
Approach LOS		E			D			D			D	

Timer - Assigned Phs	1	2		4	5	6		8
Phs Duration (G+Y+Rc), s	10.3	45.2		30.1	16.7	38.8		35.6
Change Period (Y+Rc), s	* 5.7	5.4		6.1	* 5.7	5.4		6.1
Max Green Setting (Gmax), s	* 8.3	43.8		37.0	* 15	37.4		37.0
Max Q Clear Time (g_c+I1), s	14.9	17.1		19.4	11.0	26.2		26.5
Green Ext Time (p_c), s	0.0	8.3		2.1	0.1	6.5		1.6

Intersection Summary	
HCM 6th Ctrl Delay	48.5
HCM 6th LOS	D

Notes

* HCM 6th computational engine requires equal clearance times for the phases crossing the barrier.



Movement	EBL	EBT	EBR	WBL	WBT	WBR	NBL	NBT	NBR	SBL	SBT	SBR
Lane Configurations												
Traffic Volume (veh/h)	60	85	88	35	133	53	118	406	67	26	328	56
Future Volume (veh/h)	60	85	88	35	133	53	118	406	67	26	328	56
Initial Q (Qb), veh	0	0	0	0	0	0	0	0	0	0	0	0
Ped-Bike Adj(A_pbT)	1.00		0.91	1.00		0.94	1.00		0.96	1.00		0.95
Parking Bus, Adj	1.00	1.00	1.00	1.00	1.00	1.00	1.00	1.00	1.00	1.00	1.00	1.00
Work Zone On Approach		No			No			No			No	
Adj Sat Flow, veh/h/ln	1870	1870	1870	1870	1870	1870	1870	1870	1870	1870	1870	1870
Adj Flow Rate, veh/h	69	98	101	42	160	64	139	478	79	34	426	73
Peak Hour Factor	0.87	0.87	0.87	0.83	0.83	0.83	0.85	0.85	0.85	0.77	0.77	0.77
Percent Heavy Veh, %	2	2	2	2	2	2	2	2	2	2	2	2
Cap, veh/h	91	130	174	54	207	83	174	535	88	60	525	423
Arrive On Green	0.12	0.12	0.12	0.20	0.20	0.20	0.10	0.34	0.34	0.03	0.28	0.28
Sat Flow, veh/h	757	1075	1442	276	1051	420	1781	1553	257	1781	1870	1505
Grp Volume(v), veh/h	167	0	101	266	0	0	139	0	557	34	426	73
Grp Sat Flow(s),veh/h/ln	1833	0	1442	1747	0	0	1781	0	1810	1781	1870	1505
Q Serve(g_s), s	6.7	0.0	5.0	11.0	0.0	0.0	5.8	0.0	22.2	1.4	16.2	2.8
Cycle Q Clear(g_c), s	6.7	0.0	5.0	11.0	0.0	0.0	5.8	0.0	22.2	1.4	16.2	2.8
Prop In Lane	0.41		1.00	0.16		0.24	1.00		0.14	1.00		1.00
Lane Grp Cap(c), veh/h	221	0	174	344	0	0	174	0	624	60	525	423
V/C Ratio(X)	0.76	0.00	0.58	0.77	0.00	0.00	0.80	0.00	0.89	0.57	0.81	0.17
Avail Cap(c_a), veh/h	411	0	324	598	0	0	337	0	1145	126	962	774
HCM Platoon Ratio	1.00	1.00	1.00	1.00	1.00	1.00	1.00	1.00	1.00	1.00	1.00	1.00
Upstream Filter(I)	1.00	0.00	1.00	1.00	0.00	0.00	1.00	0.00	1.00	1.00	1.00	1.00
Uniform Delay (d), s/veh	32.4	0.0	31.7	29.0	0.0	0.0	33.7	0.0	23.6	36.3	25.5	20.7
Incr Delay (d2), s/veh	2.0	0.0	1.1	1.4	0.0	0.0	3.2	0.0	1.9	3.1	1.2	0.1
Initial Q Delay(d3),s/veh	0.0	0.0	0.0	0.0	0.0	0.0	0.0	0.0	0.0	0.0	0.0	0.0
%ile BackOfQ(50%),veh/ln	3.0	0.0	1.7	4.5	0.0	0.0	2.5	0.0	8.6	0.6	6.6	0.9
Unsig. Movement Delay, s/veh												
LnGrp Delay(d),s/veh	34.4	0.0	32.8	30.4	0.0	0.0	36.9	0.0	25.5	39.4	26.7	20.8
LnGrp LOS	C	A	C	C	A	A	D	A	C	D	C	C
Approach Vol, veh/h		268			266			696			533	
Approach Delay, s/veh		33.8			30.4			27.8			26.7	
Approach LOS		C			C			C			C	

Timer - Assigned Phs	1	2		4	5	6		8
Phs Duration (G+Y+Rc), s	8.2	32.1		15.1	13.0	27.2		20.9
Change Period (Y+Rc), s	5.6	5.8		5.9	5.6	5.8		5.9
Max Green Setting (Gmax), s	5.4	48.2		17.1	14.4	39.2		26.1
Max Q Clear Time (g_c+I1), s	3.4	24.2		8.7	7.8	18.2		13.0
Green Ext Time (p_c), s	0.0	2.1		0.5	0.0	1.5		0.8

Intersection Summary		
HCM 6th Ctrl Delay		28.8
HCM 6th LOS		C

Intersection	
Intersection Delay, s/veh	90.3
Intersection LOS	F

Movement	EBL	EBT	EBR	WBL	WBT	WBR	NBL	NBT	NBR	SBL	SBT	SBR
Lane Configurations												
Traffic Vol, veh/h	53	153	82	44	115	89	107	567	65	81	351	30
Future Vol, veh/h	53	153	82	44	115	89	107	567	65	81	351	30
Peak Hour Factor	0.73	0.73	0.73	0.74	0.74	0.74	0.78	0.78	0.78	0.66	0.66	0.66
Heavy Vehicles, %	2	2	2	2	2	2	2	2	2	2	2	2
Mvmt Flow	73	210	112	59	155	120	137	727	83	123	532	45
Number of Lanes	0	1	0	0	1	0	1	2	0	1	2	0

Approach	EB	WB	NB	SB
Opposing Approach	WB	EB	SB	NB
Opposing Lanes	1	1	3	3
Conflicting Approach Left	SB	NB	EB	WB
Conflicting Lanes Left	3	3	1	1
Conflicting Approach Right	NB	SB	WB	EB
Conflicting Lanes Right	3	3	1	1
HCM Control Delay	118.1	72.1	116.2	48.3
HCM LOS	F	F	F	E

Lane	NBLn1	NBLn2	NBLn3	EBLn1	WBLn1	SBLn1	SBLn2	SBLn3
Vol Left, %	100%	0%	0%	18%	18%	100%	0%	0%
Vol Thru, %	0%	100%	74%	53%	46%	0%	100%	80%
Vol Right, %	0%	0%	26%	28%	36%	0%	0%	20%
Sign Control	Stop	Stop	Stop	Stop	Stop	Stop	Stop	Stop
Traffic Vol by Lane	107	378	254	288	248	81	234	147
LT Vol	107	0	0	53	44	81	0	0
Through Vol	0	378	189	153	115	0	234	117
RT Vol	0	0	65	82	89	0	0	30
Lane Flow Rate	137	485	326	395	335	123	355	223
Geometry Grp	7	7	7	7	7	7	7	7
Degree of Util (X)	0.386	1.309	0.862	1.118	0.951	0.349	0.96	0.594
Departure Headway (Hd)	10.801	10.264	10.072	10.72	10.995	10.938	10.401	10.248
Convergence, Y/N	Yes	Yes	Yes	Yes	Yes	Yes	Yes	Yes
Cap	335	359	361	343	332	331	351	354
Service Time	8.501	7.964	7.772	8.42	8.695	8.638	8.101	7.948
HCM Lane V/C Ratio	0.409	1.351	0.903	1.152	1.009	0.372	1.011	0.63
HCM Control Delay	20.1	186.8	51.5	118.1	72.1	19.4	71.7	26.9
HCM Lane LOS	C	F	F	F	F	C	F	D
HCM 95th-tile Q	1.8	21.5	8.1	14.6	9.8	1.5	10.3	3.6



Movement	EBL	EBT	EBR	WBL	WBT	WBR	NBL	NBT	NBR	SBL	SBT	SBR
Lane Configurations												
Traffic Volume (veh/h)	103	79	147	59	82	19	70	586	28	12	506	33
Future Volume (veh/h)	103	79	147	59	82	19	70	586	28	12	506	33
Initial Q (Qb), veh	0	0	0	0	0	0	0	0	0	0	0	0
Ped-Bike Adj(A_pbT)	1.00		0.96	1.00		0.96	1.00		0.96	1.00		0.95
Parking Bus, Adj	1.00	1.00	1.00	1.00	1.00	1.00	1.00	1.00	1.00	1.00	1.00	1.00
Work Zone On Approach		No			No			No			No	
Adj Sat Flow, veh/h/ln	1870	1870	1870	1870	1870	1870	1870	1870	1870	1870	1870	1870
Adj Flow Rate, veh/h	126	96	179	92	128	30	83	698	33	14	610	40
Peak Hour Factor	0.82	0.82	0.82	0.64	0.64	0.64	0.84	0.84	0.84	0.83	0.83	0.83
Percent Heavy Veh, %	2	2	2	2	2	2	2	2	2	2	2	2
Cap, veh/h	170	130	251	126	176	41	137	1224	58	48	1030	67
Arrive On Green	0.17	0.17	0.17	0.19	0.19	0.19	0.08	0.36	0.36	0.03	0.31	0.31
Sat Flow, veh/h	1032	786	1517	658	916	215	1781	3446	163	1781	3373	221
Grp Volume(v), veh/h	222	0	179	250	0	0	83	360	371	14	321	329
Grp Sat Flow(s),veh/h/ln	1819	0	1517	1789	0	0	1781	1777	1832	1781	1777	1817
Q Serve(g_s), s	8.7	0.0	8.3	9.8	0.0	0.0	3.4	12.2	12.3	0.6	11.4	11.5
Cycle Q Clear(g_c), s	8.7	0.0	8.3	9.8	0.0	0.0	3.4	12.2	12.3	0.6	11.4	11.5
Prop In Lane	0.57		1.00	0.37		0.12	1.00		0.09	1.00		0.12
Lane Grp Cap(c), veh/h	300	0	251	343	0	0	137	631	651	48	542	555
V/C Ratio(X)	0.74	0.00	0.71	0.73	0.00	0.00	0.61	0.57	0.57	0.29	0.59	0.59
Avail Cap(c_a), veh/h	616	0	513	677	0	0	293	918	946	198	822	841
HCM Platoon Ratio	1.00	1.00	1.00	1.00	1.00	1.00	1.00	1.00	1.00	1.00	1.00	1.00
Upstream Filter(I)	1.00	0.00	1.00	1.00	0.00	0.00	1.00	1.00	1.00	1.00	1.00	1.00
Uniform Delay (d), s/veh	29.7	0.0	29.5	28.4	0.0	0.0	33.4	19.5	19.5	35.7	22.0	22.0
Incr Delay (d2), s/veh	3.6	0.0	3.8	3.0	0.0	0.0	1.6	2.9	2.8	1.2	3.7	3.6
Initial Q Delay(d3),s/veh	0.0	0.0	0.0	0.0	0.0	0.0	0.0	0.0	0.0	0.0	0.0	0.0
%ile BackOfQ(50%),veh/ln	4.0	0.0	3.2	4.3	0.0	0.0	1.4	5.0	5.2	0.3	4.9	5.0
Unsig. Movement Delay, s/veh												
LnGrp Delay(d),s/veh	33.2	0.0	33.3	31.4	0.0	0.0	35.0	22.4	22.3	36.9	25.7	25.7
LnGrp LOS	C	A	C	C	A	A	D	C	C	D	C	C
Approach Vol, veh/h		401			250			814			664	
Approach Delay, s/veh		33.3			31.4			23.7			25.9	
Approach LOS		C			C			C			C	

Timer - Assigned Phs	1	2		4	5	6		8
Phs Duration (G+Y+Rc), s	10.5	28.2		19.0	6.7	32.0		17.0
Change Period (Y+Rc), s	* 4.7	5.4		* 4.7	* 4.7	5.4		4.7
Max Green Setting (Gmax), s	* 13	34.6		* 28	* 8.3	38.6		25.3
Max Q Clear Time (g_c+I1), s	5.4	13.5		11.8	2.6	14.3		10.7
Green Ext Time (p_c), s	0.0	8.6		1.3	0.0	10.5		1.7

Intersection Summary	
HCM 6th Ctrl Delay	27.1
HCM 6th LOS	C

Notes

* HCM 6th computational engine requires equal clearance times for the phases crossing the barrier.



Movement	EBL	EBT	EBR	WBL	WBT	WBR	NBL	NBT	NBR	SBL	SBT	SBR
Lane Configurations												
Traffic Volume (veh/h)	164	120	322	45	112	55	239	746	47	29	476	94
Future Volume (veh/h)	164	120	322	45	112	55	239	746	47	29	476	94
Initial Q (Qb), veh	0	0	0	0	0	0	0	0	0	0	0	0
Ped-Bike Adj(A_pbT)	1.00		0.98	0.99		0.96	1.00		0.96	1.00		0.97
Parking Bus, Adj	1.00	1.00	1.00	1.00	1.00	1.00	1.00	1.00	1.00	1.00	1.00	1.00
Work Zone On Approach		No			No			No			No	
Adj Sat Flow, veh/h/ln	1870	1870	1870	1870	1870	1870	1870	1870	1870	1870	1870	1870
Adj Flow Rate, veh/h	228	167	447	53	132	65	319	995	63	40	661	131
Peak Hour Factor	0.72	0.72	0.72	0.85	0.85	0.85	0.75	0.75	0.75	0.72	0.72	0.72
Percent Heavy Veh, %	2	2	2	2	2	2	2	2	2	2	2	2
Cap, veh/h	240	748	619	89	186	83	333	1379	87	57	743	147
Arrive On Green	0.13	0.40	0.40	0.21	0.21	0.21	0.19	0.41	0.41	0.03	0.25	0.25
Sat Flow, veh/h	1781	1870	1546	228	867	385	1781	3384	214	1781	2938	581
Grp Volume(v), veh/h	228	167	447	250	0	0	319	522	536	40	399	393
Grp Sat Flow(s),veh/h/ln	1781	1870	1546	1481	0	0	1781	1777	1821	1781	1777	1743
Q Serve(g_s), s	13.9	6.4	26.7	11.6	0.0	0.0	19.4	27.0	27.0	2.4	23.7	23.7
Cycle Q Clear(g_c), s	13.9	6.4	26.7	17.0	0.0	0.0	19.4	27.0	27.0	2.4	23.7	23.7
Prop In Lane	1.00		1.00	0.21		0.26	1.00		0.12	1.00		0.33
Lane Grp Cap(c), veh/h	240	748	619	357	0	0	333	724	742	57	449	441
V/C Ratio(X)	0.95	0.22	0.72	0.70	0.00	0.00	0.96	0.72	0.72	0.70	0.89	0.89
Avail Cap(c_a), veh/h	240	913	754	480	0	0	333	724	742	83	468	459
HCM Platoon Ratio	1.00	1.00	1.00	1.00	1.00	1.00	1.00	1.00	1.00	1.00	1.00	1.00
Upstream Filter(I)	1.00	1.00	1.00	1.00	0.00	0.00	1.00	1.00	1.00	1.00	1.00	1.00
Uniform Delay (d), s/veh	46.9	21.6	27.6	40.0	0.0	0.0	44.0	27.2	27.2	52.3	39.3	39.4
Incr Delay (d2), s/veh	44.2	0.1	1.9	1.4	0.0	0.0	38.4	3.8	3.8	5.6	18.6	19.2
Initial Q Delay(d3),s/veh	0.0	0.0	0.0	0.0	0.0	0.0	0.0	0.0	0.0	0.0	0.0	0.0
%ile BackOfQ(50%),veh/ln	9.1	2.8	9.9	6.4	0.0	0.0	12.0	11.9	12.2	1.2	12.5	12.4
Unsig. Movement Delay, s/veh												
LnGrp Delay(d),s/veh	91.1	21.6	29.5	41.3	0.0	0.0	82.4	31.0	30.9	57.9	57.9	58.5
LnGrp LOS	F	C	C	D	A	A	F	C	C	E	E	E
Approach Vol, veh/h		842			250			1377			832	
Approach Delay, s/veh		44.6			41.3			42.9			58.2	
Approach LOS		D			D			D			E	

Timer - Assigned Phs	1	2		4	5	6	7	8
Phs Duration (G+Y+Rc), s	9.1	50.2		49.9	26.0	33.3	20.3	29.6
Change Period (Y+Rc), s	5.6	5.7		6.2	5.6	5.7	5.6	6.2
Max Green Setting (Gmax), s	5.1	44.1		53.3	20.4	28.8	14.7	33.0
Max Q Clear Time (g_c+I1), s	4.4	29.0		28.7	21.4	25.7	15.9	19.0
Green Ext Time (p_c), s	0.0	8.1		1.5	0.0	1.8	0.0	1.0

Intersection Summary		
HCM 6th Ctrl Delay	47.1	
HCM 6th LOS	D	



Movement	EBL	EBT	EBR	WBL	WBT	WBR	NBL	NBT	NBR	SBL	SBT	SBR
Lane Configurations												
Traffic Volume (veh/h)	0	0	0	218	1	310	161	540	0	0	723	97
Future Volume (veh/h)	0	0	0	218	1	310	161	540	0	0	723	97
Initial Q (Qb), veh				0	0	0	0	0	0	0	0	0
Ped-Bike Adj(A_pbT)				1.00		0.97	1.00		1.00	1.00		0.96
Parking Bus, Adj				1.00	1.00	1.00	1.00	1.00	1.00	1.00	1.00	1.00
Work Zone On Approach					No			No			No	
Adj Sat Flow, veh/h/ln				1870	1870	1870	1870	1870	0	0	1870	1870
Adj Flow Rate, veh/h				279	1	397	171	574	0	0	841	113
Peak Hour Factor				0.78	0.78	0.78	0.94	0.94	0.94	0.86	0.86	0.86
Percent Heavy Veh, %				2	2	2	2	2	0	0	2	2
Cap, veh/h				550	2	477	207	2033	0	0	1261	169
Arrive On Green				0.31	0.31	0.31	0.12	0.57	0.00	0.00	0.40	0.40
Sat Flow, veh/h				1775	6	1540	1781	3647	0	0	3223	421
Grp Volume(v), veh/h				280	0	397	171	574	0	0	477	477
Grp Sat Flow(s),veh/h/ln				1782	0	1540	1781	1777	0	0	1777	1773
Q Serve(g_s), s				11.4	0.0	21.3	8.3	7.3	0.0	0.0	19.5	19.5
Cycle Q Clear(g_c), s				11.4	0.0	21.3	8.3	7.3	0.0	0.0	19.5	19.5
Prop In Lane				1.00		1.00	1.00		0.00	0.00		0.24
Lane Grp Cap(c), veh/h				552	0	477	207	2033	0	0	716	714
V/C Ratio(X)				0.51	0.00	0.83	0.83	0.28	0.00	0.00	0.67	0.67
Avail Cap(c_a), veh/h				780	0	674	387	2824	0	0	932	930
HCM Platoon Ratio				1.00	1.00	1.00	1.00	1.00	1.00	1.00	1.00	1.00
Upstream Filter(I)				1.00	0.00	1.00	1.00	1.00	0.00	0.00	1.00	1.00
Uniform Delay (d), s/veh				25.1	0.0	28.5	38.4	9.7	0.0	0.0	21.7	21.7
Incr Delay (d2), s/veh				0.7	0.0	6.1	3.2	0.3	0.0	0.0	3.9	3.9
Initial Q Delay(d3),s/veh				0.0	0.0	0.0	0.0	0.0	0.0	0.0	0.0	0.0
%ile BackOfQ(50%),veh/ln				4.8	0.0	8.4	3.7	2.5	0.0	0.0	8.2	8.2
Unsig. Movement Delay, s/veh												
LnGrp Delay(d),s/veh				25.8	0.0	34.7	41.6	10.0	0.0	0.0	25.5	25.6
LnGrp LOS				C	A	C	D	A	A	A	C	C
Approach Vol, veh/h					677			745			954	
Approach Delay, s/veh					31.0			17.2			25.5	
Approach LOS					C			B			C	

Timer - Assigned Phs	1	2		4		6
Phs Duration (G+Y+Rc), s	15.0	41.2		32.6		56.2
Change Period (Y+Rc), s	4.7	5.4		5.1		5.4
Max Green Setting (Gmax), s	10.3	46.6		38.9		70.6
Max Q Clear Time (g_c+I1), s	10.3	21.5		23.3		9.3
Green Ext Time (p_c), s	0.1	14.3		3.0		11.4

Intersection Summary	
HCM 6th Ctrl Delay	24.5
HCM 6th LOS	C

Notes

* HCM 6th computational engine requires equal clearance times for the phases crossing the barrier.



Movement	EBL	EBT	EBR	WBL	WBT	WBR	NBL	NBT	NBR	SBL	SBT	SBR
Lane Configurations												
Traffic Volume (veh/h)	75	1	220	0	0	0	0	626	162	239	703	0
Future Volume (veh/h)	75	1	220	0	0	0	0	626	162	239	703	0
Initial Q (Qb), veh	0	0	0				0	0	0	0	0	0
Ped-Bike Adj(A_pbT)	1.00		0.97				1.00		0.95	1.00		1.00
Parking Bus, Adj	1.00	1.00	1.00				1.00	1.00	1.00	1.00	1.00	1.00
Work Zone On Approach		No						No			No	
Adj Sat Flow, veh/h/ln	1870	1870	1870				0	1870	1870	1870	1870	0
Adj Flow Rate, veh/h	125	2	367				0	703	182	275	808	0
Peak Hour Factor	0.60	0.60	0.60				0.89	0.89	0.89	0.87	0.87	0.87
Percent Heavy Veh, %	2	2	2				0	2	2	2	2	0
Cap, veh/h	142	2	417				0	1056	448	315	1877	0
Arrive On Green	0.35	0.35	0.35				0.00	0.30	0.30	0.18	0.53	0.00
Sat Flow, veh/h	404	6	1187				0	3647	1508	1781	3647	0
Grp Volume(v), veh/h	494	0	0				0	703	182	275	808	0
Grp Sat Flow(s),veh/h/ln	1598	0	0				0	1777	1508	1781	1777	0
Q Serve(g_s), s	25.2	0.0	0.0				0.0	15.1	8.4	13.1	12.1	0.0
Cycle Q Clear(g_c), s	25.2	0.0	0.0				0.0	15.1	8.4	13.1	12.1	0.0
Prop In Lane	0.25		0.74				0.00		1.00	1.00		0.00
Lane Grp Cap(c), veh/h	561	0	0				0	1056	448	315	1877	0
V/C Ratio(X)	0.88	0.00	0.00				0.00	0.67	0.41	0.87	0.43	0.00
Avail Cap(c_a), veh/h	810	0	0				0	1289	547	601	2680	0
HCM Platoon Ratio	1.00	1.00	1.00				1.00	1.00	1.00	1.00	1.00	1.00
Upstream Filter(I)	1.00	0.00	0.00				0.00	1.00	1.00	1.00	1.00	0.00
Uniform Delay (d), s/veh	26.5	0.0	0.0				0.0	26.7	24.4	34.8	12.5	0.0
Incr Delay (d2), s/veh	8.0	0.0	0.0				0.0	2.7	2.1	3.0	0.6	0.0
Initial Q Delay(d3),s/veh	0.0	0.0	0.0				0.0	0.0	0.0	0.0	0.0	0.0
%ile BackOfQ(50%),veh/ln	10.4	0.0	0.0				0.0	6.4	3.1	5.6	4.3	0.0
Unsig. Movement Delay, s/veh												
LnGrp Delay(d),s/veh	34.5	0.0	0.0				0.0	29.4	26.5	37.8	13.1	0.0
LnGrp LOS	C	A	A				A	C	C	D	B	A
Approach Vol, veh/h		494						885			1083	
Approach Delay, s/veh		34.5						28.8			19.4	
Approach LOS		C						C			B	

Timer - Assigned Phs	2		5	6		8						
Phs Duration (G+Y+Rc), s	51.3		20.1	31.2		35.6						
Change Period (Y+Rc), s	5.4		* 4.7	5.4		5.1						
Max Green Setting (Gmax), s	65.5		* 29	31.5		44.0						
Max Q Clear Time (g_c+I1), s	14.1		15.1	17.1		27.2						
Green Ext Time (p_c), s	17.3		0.3	8.8		3.3						

Intersection Summary		
HCM 6th Ctrl Delay		25.8
HCM 6th LOS		C

Notes

* HCM 6th computational engine requires equal clearance times for the phases crossing the barrier.



Movement	EBL	EBT	EBR	WBL	WBT	WBR	NBL	NBT	NBR	SBL	SBT	SBR
Lane Configurations												
Traffic Volume (veh/h)	0	0	0	93	2	125	0	482	165	0	361	84
Future Volume (veh/h)	0	0	0	93	2	125	0	482	165	0	361	84
Initial Q (Qb), veh				0	0	0	0	0	0	0	0	0
Ped-Bike Adj(A_pbT)				1.00		0.97	1.00		0.96	1.00		0.96
Parking Bus, Adj				1.00	1.00	1.00	1.00	1.00	1.00	1.00	1.00	1.00
Work Zone On Approach					No			No			No	
Adj Sat Flow, veh/h/ln				1870	1870	1870	0	1870	1870	0	1870	1870
Adj Flow Rate, veh/h				126	3	169	0	560	192	0	435	101
Peak Hour Factor				0.74	0.74	0.74	0.86	0.86	0.86	0.83	0.83	0.83
Percent Heavy Veh, %				2	2	2	0	2	2	0	2	2
Cap, veh/h				389	9	342	0	1425	609	0	1658	371
Arrive On Green				0.22	0.22	0.22	0.00	0.40	0.40	0.00	0.40	0.40
Sat Flow, veh/h				1742	41	1530	0	3647	1520	0	4305	924
Grp Volume(v), veh/h				129	0	169	0	560	192	0	355	181
Grp Sat Flow(s),veh/h/ln				1783	0	1530	0	1777	1520	0	1702	1657
Q Serve(g_s), s				2.0	0.0	3.2	0.0	3.7	2.9	0.0	2.3	2.4
Cycle Q Clear(g_c), s				2.0	0.0	3.2	0.0	3.7	2.9	0.0	2.3	2.4
Prop In Lane				0.98		1.00	0.00		1.00	0.00		0.56
Lane Grp Cap(c), veh/h				398	0	342	0	1425	609	0	1365	664
V/C Ratio(X)				0.32	0.00	0.49	0.00	0.39	0.32	0.00	0.26	0.27
Avail Cap(c_a), veh/h				2567	0	2202	0	6365	2722	0	6097	2968
HCM Platoon Ratio				1.00	1.00	1.00	1.00	1.00	1.00	1.00	1.00	1.00
Upstream Filter(I)				1.00	0.00	1.00	0.00	1.00	1.00	0.00	1.00	1.00
Uniform Delay (d), s/veh				10.8	0.0	11.3	0.0	7.1	6.8	0.0	6.7	6.7
Incr Delay (d2), s/veh				0.5	0.0	1.1	0.0	0.2	0.3	0.0	0.1	0.2
Initial Q Delay(d3),s/veh				0.0	0.0	0.0	0.0	0.0	0.0	0.0	0.0	0.0
%ile BackOfQ(50%),veh/ln				0.7	0.0	0.9	0.0	0.8	0.5	0.0	0.5	0.5
Unsig. Movement Delay, s/veh												
LnGrp Delay(d),s/veh				11.3	0.0	12.4	0.0	7.3	7.1	0.0	6.8	6.9
LnGrp LOS				B	A	B	A	A	A	A	A	A
Approach Vol, veh/h					298			752			536	
Approach Delay, s/veh					11.9			7.2			6.8	
Approach LOS					B			A			A	

Timer - Assigned Phs	2		6		8			
Phs Duration (G+Y+Rc), s	19.7		19.7		13.5			
Change Period (Y+Rc), s	6.4		6.4		6.1			
Max Green Setting (Gmax), s	59.6		59.6		47.9			
Max Q Clear Time (g_c+I1), s	5.7		4.4		5.2			
Green Ext Time (p_c), s	4.7		3.6		1.4			

Intersection Summary		
HCM 6th Ctrl Delay	8.0	
HCM 6th LOS	A	



Movement	EBL	EBT	EBR	WBL	WBT	WBR	NBL	NBT	NBR	SBL	SBT	SBR
Lane Configurations												
Traffic Volume (veh/h)	85	2	173	0	0	0	0	562	57	71	382	0
Future Volume (veh/h)	85	2	173	0	0	0	0	562	57	71	382	0
Initial Q (Qb), veh	0	0	0				0	0	0	0	0	0
Ped-Bike Adj(A_pbT)	1.00		0.93				1.00		0.95	1.00		1.00
Parking Bus, Adj	1.00	1.00	1.00				1.00	1.00	1.00	1.00	1.00	1.00
Work Zone On Approach		No						No			No	
Adj Sat Flow, veh/h/ln	1870	1870	1870				0	1870	1870	1870	1870	0
Adj Flow Rate, veh/h	102	2	208				0	653	66	97	523	0
Peak Hour Factor	0.83	0.83	0.83				0.86	0.86	0.86	0.73	0.73	0.73
Percent Heavy Veh, %	2	2	2				0	2	2	2	2	0
Cap, veh/h	327	6	488				0	1188	506	138	1911	0
Arrive On Green	0.19	0.19	0.19				0.00	0.33	0.33	0.08	0.54	0.00
Sat Flow, veh/h	1749	34	2607				0	3647	1513	1781	3647	0
Grp Volume(v), veh/h	104	0	208				0	653	66	97	523	0
Grp Sat Flow(s),veh/h/ln	1783	0	1304				0	1777	1513	1781	1777	0
Q Serve(g_s), s	2.3	0.0	3.2				0.0	6.8	1.4	2.4	3.6	0.0
Cycle Q Clear(g_c), s	2.3	0.0	3.2				0.0	6.8	1.4	2.4	3.6	0.0
Prop In Lane	0.98		1.00				0.00		1.00	1.00		0.00
Lane Grp Cap(c), veh/h	333	0	488				0	1188	506	138	1911	0
V/C Ratio(X)	0.31	0.00	0.43				0.00	0.55	0.13	0.70	0.27	0.00
Avail Cap(c_a), veh/h	1488	0	2176				0	3413	1453	797	5448	0
HCM Platoon Ratio	1.00	1.00	1.00				1.00	1.00	1.00	1.00	1.00	1.00
Upstream Filter(I)	1.00	0.00	1.00				0.00	1.00	1.00	1.00	1.00	0.00
Uniform Delay (d), s/veh	15.9	0.0	16.3				0.0	12.3	10.5	20.4	5.7	0.0
Incr Delay (d2), s/veh	0.5	0.0	0.6				0.0	0.4	0.1	6.3	0.1	0.0
Initial Q Delay(d3),s/veh	0.0	0.0	0.0				0.0	0.0	0.0	0.0	0.0	0.0
%ile BackOfQ(50%),veh/ln	0.9	0.0	0.9				0.0	2.1	0.4	1.1	0.8	0.0
Unsig. Movement Delay, s/veh												
LnGrp Delay(d),s/veh	16.5	0.0	16.9				0.0	12.7	10.6	26.7	5.8	0.0
LnGrp LOS	B	A	B				A	B	B	C	A	A
Approach Vol, veh/h		312						719			620	
Approach Delay, s/veh		16.7						12.5			9.0	
Approach LOS		B						B			A	

Timer - Assigned Phs	1	2	4	6
Phs Duration (G+Y+Rc), s	9.2	21.6	14.6	30.8
Change Period (Y+Rc), s	5.7	6.4	6.1	6.4
Max Green Setting (Gmax), s	3.5	43.6	37.9	69.6
Max Q Clear Time (g_c+I1), s	4.4	8.8	5.2	5.6
Green Ext Time (p_c), s	0.2	4.9	1.5	3.7

Intersection Summary	
HCM 6th Ctrl Delay	12.0
HCM 6th LOS	B

Notes

* HCM 6th computational engine requires equal clearance times for the phases crossing the barrier.



Movement	EBL	EBT	EBR	WBL	WBT	WBR	NBL	NBT	NBR	SBL	SBT	SBR
Lane Configurations												
Traffic Volume (veh/h)	70	88	33	2	88	59	54	85	1	116	68	31
Future Volume (veh/h)	70	88	33	2	88	59	54	85	1	116	68	31
Initial Q (Qb), veh	0	0	0	0	0	0	0	0	0	0	0	0
Ped-Bike Adj(A_pbT)	1.00		0.96	1.00		0.95	1.00		0.98	1.00		0.96
Parking Bus, Adj	1.00	1.00	1.00	1.00	1.00	1.00	1.00	1.00	1.00	1.00	1.00	1.00
Work Zone On Approach		No			No			No			No	
Adj Sat Flow, veh/h/ln	1870	1870	1870	1870	1870	1870	1870	1870	1870	1870	1870	1870
Adj Flow Rate, veh/h	89	111	42	3	117	79	75	118	1	215	126	57
Peak Hour Factor	0.79	0.79	0.79	0.75	0.75	0.75	0.72	0.72	0.72	0.54	0.54	0.54
Percent Heavy Veh, %	2	2	2	2	2	2	2	2	2	2	2	2
Cap, veh/h	115	341	277	7	228	183	97	1441	627	251	1180	502
Arrive On Green	0.06	0.18	0.18	0.00	0.12	0.12	0.05	0.41	0.41	0.14	0.49	0.49
Sat Flow, veh/h	1781	1870	1522	1781	1870	1500	1781	3554	1546	1781	2398	1019
Grp Volume(v), veh/h	89	111	42	3	117	79	75	118	1	215	91	92
Grp Sat Flow(s),veh/h/ln	1781	1870	1522	1781	1870	1500	1781	1777	1546	1781	1777	1640
Q Serve(g_s), s	3.6	3.7	1.7	0.1	4.2	3.5	3.0	1.5	0.0	8.6	2.0	2.2
Cycle Q Clear(g_c), s	3.6	3.7	1.7	0.1	4.2	3.5	3.0	1.5	0.0	8.6	2.0	2.2
Prop In Lane	1.00		1.00	1.00		1.00	1.00		1.00	1.00		0.62
Lane Grp Cap(c), veh/h	115	341	277	7	228	183	97	1441	627	251	874	807
V/C Ratio(X)	0.78	0.33	0.15	0.42	0.51	0.43	0.78	0.08	0.00	0.86	0.10	0.11
Avail Cap(c_a), veh/h	258	929	756	123	787	631	241	1441	627	251	874	807
HCM Platoon Ratio	1.00	1.00	1.00	1.00	1.00	1.00	1.00	1.00	1.00	1.00	1.00	1.00
Upstream Filter(I)	1.00	1.00	1.00	1.00	1.00	1.00	1.00	1.00	1.00	1.00	1.00	1.00
Uniform Delay (d), s/veh	33.4	25.8	24.9	36.0	29.8	29.5	33.8	13.2	12.8	30.4	9.9	9.9
Incr Delay (d2), s/veh	4.2	0.6	0.3	13.6	1.8	1.6	5.0	0.1	0.0	23.4	0.2	0.3
Initial Q Delay(d3),s/veh	0.0	0.0	0.0	0.0	0.0	0.0	0.0	0.0	0.0	0.0	0.0	0.0
%ile BackOfQ(50%),veh/ln	1.6	1.7	0.6	0.1	2.0	1.3	1.4	0.6	0.0	5.2	0.8	0.8
Unsig. Movement Delay, s/veh												
LnGrp Delay(d),s/veh	37.6	26.3	25.2	49.6	31.6	31.1	38.8	13.4	12.8	53.9	10.1	10.2
LnGrp LOS	D	C	C	D	C	C	D	B	B	D	B	B
Approach Vol, veh/h		242			199			194			398	
Approach Delay, s/veh		30.3			31.7			23.2			33.8	
Approach LOS		C			C			C			C	

Timer - Assigned Phs	1	2	3	4	5	6	7	8
Phs Duration (G+Y+Rc), s	8.5	40.8	9.3	13.9	14.8	34.5	4.9	18.3
Change Period (Y+Rc), s	4.6	5.1	4.6	5.1	4.6	5.1	4.6	5.1
Max Green Setting (Gmax), s	3.9	29.8	10.5	30.5	10.2	29.4	5.0	36.0
Max Q Clear Time (g_c+I1), s	5.6	4.2	5.6	6.2	10.6	3.5	2.1	5.7
Green Ext Time (p_c), s	0.0	1.5	0.0	0.9	0.0	0.9	0.0	0.7

Intersection Summary	
HCM 6th Ctrl Delay	30.6
HCM 6th LOS	C



Movement	EBL	EBT	EBR	WBL	WBT	WBR	NBL	NBT	NBR	SBL	SBT	SBR
Lane Configurations												
Traffic Volume (veh/h)	139	75	68	43	60	171	65	347	61	356	409	183
Future Volume (veh/h)	139	75	68	43	60	171	65	347	61	356	409	183
Initial Q (Qb), veh	0	0	0	0	0	0	0	0	0	0	0	0
Ped-Bike Adj(A_pbT)	1.00		0.96	1.00		0.95	1.00		0.96	1.00		0.97
Parking Bus, Adj	1.00	1.00	1.00	1.00	1.00	1.00	1.00	1.00	1.00	1.00	1.00	1.00
Work Zone On Approach		No			No			No			No	
Adj Sat Flow, veh/h/ln	1870	1870	1870	1870	1870	1870	1870	1870	1870	1870	1870	1870
Adj Flow Rate, veh/h	183	99	89	52	72	206	76	403	71	445	511	229
Peak Hour Factor	0.76	0.76	0.76	0.83	0.83	0.83	0.86	0.86	0.86	0.80	0.80	0.80
Percent Heavy Veh, %	2	2	2	2	2	2	2	2	2	2	2	2
Cap, veh/h	282	296	240	271	285	596	119	633	111	411	902	402
Arrive On Green	0.16	0.16	0.16	0.15	0.15	0.15	0.07	0.21	0.21	0.23	0.38	0.38
Sat Flow, veh/h	1781	1870	1515	1781	1870	1513	1781	3005	524	1781	2369	1056
Grp Volume(v), veh/h	183	99	89	52	72	206	76	237	237	445	383	357
Grp Sat Flow(s),veh/h/ln	1781	1870	1515	1781	1870	1513	1781	1777	1753	1781	1777	1648
Q Serve(g_s), s	10.3	5.0	5.6	2.7	3.6	10.4	4.4	12.9	13.2	24.6	18.1	18.3
Cycle Q Clear(g_c), s	10.3	5.0	5.6	2.7	3.6	10.4	4.4	12.9	13.2	24.6	18.1	18.3
Prop In Lane	1.00		1.00	1.00		1.00	1.00		0.30	1.00		0.64
Lane Grp Cap(c), veh/h	282	296	240	271	285	596	119	375	369	411	676	627
V/C Ratio(X)	0.65	0.33	0.37	0.19	0.25	0.35	0.64	0.63	0.64	1.08	0.57	0.57
Avail Cap(c_a), veh/h	551	578	468	601	631	876	214	498	491	411	709	658
HCM Platoon Ratio	1.00	1.00	1.00	1.00	1.00	1.00	1.00	1.00	1.00	1.00	1.00	1.00
Upstream Filter(I)	1.00	1.00	1.00	1.00	1.00	1.00	1.00	1.00	1.00	1.00	1.00	1.00
Uniform Delay (d), s/veh	42.1	39.9	40.2	39.5	39.9	23.5	48.5	38.3	38.4	41.1	26.1	26.1
Incr Delay (d2), s/veh	3.6	0.9	1.4	0.1	0.2	0.1	2.1	6.3	6.6	68.8	2.7	3.0
Initial Q Delay(d3),s/veh	0.0	0.0	0.0	0.0	0.0	0.0	0.0	0.0	0.0	0.0	0.0	0.0
%ile BackOfQ(50%),veh/ln	4.7	2.3	2.1	1.2	1.6	3.6	2.0	6.1	6.2	18.2	7.8	7.4
Unsig. Movement Delay, s/veh												
LnGrp Delay(d),s/veh	45.7	40.9	41.5	39.6	40.1	23.7	50.6	44.6	45.1	109.9	28.8	29.1
LnGrp LOS	D	D	D	D	D	C	D	D	D	F	C	C
Approach Vol, veh/h		371			330			550			1185	
Approach Delay, s/veh		43.4			29.8			45.6			59.4	
Approach LOS		D			C			D			E	

Timer - Assigned Phs	1	2		4	5	6		8
Phs Duration (G+Y+Rc), s	11.9	47.9		22.6	30.0	29.8		24.3
Change Period (Y+Rc), s	* 4.7	* 7.3		6.4	5.4	7.3		7.4
Max Green Setting (Gmax), s	* 13	* 43		36.0	24.6	29.9		33.0
Max Q Clear Time (g_c+I1), s	10.4	20.3		12.4	26.6	15.2		12.3
Green Ext Time (p_c), s	0.0	10.3		0.6	0.0	5.0		2.0

Intersection Summary		
HCM 6th Ctrl Delay	49.8	
HCM 6th LOS	D	

Notes

* HCM 6th computational engine requires equal clearance times for the phases crossing the barrier.

Intersection	
Int Delay, s/veh	1

Movement	EBL	EBR	NBL	NBT	SBT	SBR
Lane Configurations						
Traffic Vol, veh/h	4	95	103	637	367	10
Future Vol, veh/h	4	95	103	637	367	10
Conflicting Peds, #/hr	10	10	10	0	0	10
Sign Control	Free	Free	Free	Free	Stop	Stop
RT Channelized	-	None	-	None	-	None
Storage Length	0	-	-	-	-	-
Veh in Median Storage, #	2	-	-	0	0	-
Grade, %	0	-	-	0	0	-
Peak Hour Factor	63	63	70	70	75	75
Heavy Vehicles, %	2	2	2	2	2	2
Mvmt Flow	6	151	147	910	489	13

Major/Minor	Major1		Minor2	
Conflicting Flow All	10	0	1214	20
Stage 1	-	-	10	-
Stage 2	-	-	1204	-
Critical Hdwy	4.14	-	6.54	6.94
Critical Hdwy Stg 1	-	-	-	-
Critical Hdwy Stg 2	-	-	5.54	-
Follow-up Hdwy	2.22	-	4.02	3.32
Pot Cap-1 Maneuver	1608	-	~ 180	1053
Stage 1	-	-	-	-
Stage 2	-	-	~ 255	-
Platoon blocked, %		-		
Mov Cap-1 Maneuver	1593	-	0	1033
Mov Cap-2 Maneuver	-	-	0	-
Stage 1	-	-	0	-
Stage 2	-	-	0	-

Approach	NB	SB
HCM Control Delay, s	1.5	
HCM LOS		-

Minor Lane/Major Mvmt	NBL	NBT	SBLn1	SBLn2
Capacity (veh/h)	1593	-	-	1033
HCM Lane V/C Ratio	0.092	-	-	0.25
HCM Control Delay (s)	7.5	0.5	-	9.6
HCM Lane LOS	A	A	-	A
HCM 95th %tile Q(veh)	0.3	-	-	1

Notes			
~: Volume exceeds capacity	$: Delay exceeds 300s	+: Computation Not Defined	*: All major volume in platoon



Movement	WBL	WBR	NBT	NBR	SBL	SBT
Lane Configurations						
Traffic Volume (veh/h)	11	66	443	51	73	230
Future Volume (veh/h)	11	66	443	51	73	230
Initial Q (Qb), veh	0	0	0	0	0	0
Ped-Bike Adj(A_pbT)	1.00	1.00		0.96	1.00	
Parking Bus, Adj	1.00	1.00	1.00	1.00	1.00	1.00
Work Zone On Approach	No		No			No
Adj Sat Flow, veh/h/ln	1870	1870	1870	1870	1870	1870
Adj Flow Rate, veh/h	12	73	568	65	85	267
Peak Hour Factor	0.91	0.91	0.78	0.78	0.86	0.86
Percent Heavy Veh, %	2	2	2	2	2	2
Cap, veh/h	148	132	1380	157	198	1190
Arrive On Green	0.08	0.08	0.43	0.43	0.11	0.64
Sat Flow, veh/h	1781	1585	3292	365	1781	1870
Grp Volume(v), veh/h	12	73	315	318	85	267
Grp Sat Flow(s),veh/h/ln	1781	1585	1777	1787	1781	1870
Q Serve(g_s), s	0.3	2.2	6.1	6.2	2.2	3.0
Cycle Q Clear(g_c), s	0.3	2.2	6.1	6.2	2.2	3.0
Prop In Lane	1.00	1.00		0.20	1.00	
Lane Grp Cap(c), veh/h	148	132	766	771	198	1190
V/C Ratio(X)	0.08	0.55	0.41	0.41	0.43	0.22
Avail Cap(c_a), veh/h	992	883	2570	2584	1117	4106
HCM Platoon Ratio	1.00	1.00	1.00	1.00	1.00	1.00
Upstream Filter(I)	1.00	1.00	1.00	1.00	1.00	1.00
Uniform Delay (d), s/veh	21.1	22.0	9.8	9.8	20.7	3.9
Incr Delay (d2), s/veh	0.2	3.6	1.3	1.3	0.6	0.3
Initial Q Delay(d3),s/veh	0.0	0.0	0.0	0.0	0.0	0.0
%ile BackOfQ(50%),veh/ln	0.1	0.1	2.0	2.0	0.8	0.6
Unsig. Movement Delay, s/veh						
LnGrp Delay(d),s/veh	21.4	25.6	11.1	11.1	21.3	4.2
LnGrp LOS	C	C	B	B	C	A
Approach Vol, veh/h	85		633			352
Approach Delay, s/veh	25.0		11.1			8.3
Approach LOS	C		B			A

Timer - Assigned Phs		2		4	5	6
Phs Duration (G+Y+Rc), s		39.6		10.4	10.2	29.3
Change Period (Y+Rc), s		* 7.8		6.2	* 4.7	7.8
Max Green Setting (Gmax), s		* 1.1E2		27.8	* 31	72.2
Max Q Clear Time (g_c+I1), s		5.0		4.2	4.2	8.2
Green Ext Time (p_c), s		4.6		0.2	0.1	12.2

Intersection Summary	
HCM 6th Ctrl Delay	11.3
HCM 6th LOS	B

Notes

* HCM 6th computational engine requires equal clearance times for the phases crossing the barrier.

Intersection	
Int Delay, s/veh	2.5

Movement	EBT	EBR	WBL	WBT	NBL	NBR
Lane Configurations						
Traffic Vol, veh/h	75	13	11	130	24	41
Future Vol, veh/h	75	13	11	130	24	41
Conflicting Peds, #/hr	0	10	10	0	10	10
Sign Control	Free	Free	Free	Free	Stop	Stop
RT Channelized	-	None	-	None	-	None
Storage Length	-	-	-	-	0	-
Veh in Median Storage, #	0	-	-	0	0	-
Grade, %	0	-	-	0	0	-
Peak Hour Factor	91	91	57	57	70	70
Heavy Vehicles, %	2	2	2	2	2	2
Mvmt Flow	82	14	19	228	34	59

Major/Minor	Major1		Major2		Minor1	
Conflicting Flow All	0	0	106	0	375	109
Stage 1	-	-	-	-	99	-
Stage 2	-	-	-	-	276	-
Critical Hdwy	-	-	4.12	-	6.42	6.22
Critical Hdwy Stg 1	-	-	-	-	5.42	-
Critical Hdwy Stg 2	-	-	-	-	5.42	-
Follow-up Hdwy	-	-	2.218	-	3.518	3.318
Pot Cap-1 Maneuver	-	-	1485	-	626	945
Stage 1	-	-	-	-	925	-
Stage 2	-	-	-	-	771	-
Platoon blocked, %	-	-		-		
Mov Cap-1 Maneuver	-	-	1471	-	604	927
Mov Cap-2 Maneuver	-	-	-	-	604	-
Stage 1	-	-	-	-	916	-
Stage 2	-	-	-	-	752	-

Approach	EB	WB	NB
HCM Control Delay, s	0	0.6	10.3
HCM LOS			B

Minor Lane/Major Mvmt	NBLn1	EBT	EBR	WBL	WBT
Capacity (veh/h)	774	-	-	1471	-
HCM Lane V/C Ratio	0.12	-	-	0.013	-
HCM Control Delay (s)	10.3	-	-	7.5	0
HCM Lane LOS	B	-	-	A	A
HCM 95th %tile Q(veh)	0.4	-	-	0	-

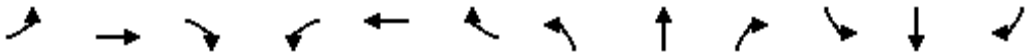

Movement	EBL	EBT	EBR	WBL	WBT	WBR	NBL	NBT	NBR	SBL	SBT	SBR
Lane Configurations												
Traffic Volume (veh/h)	45	46	26	5	48	81	29	446	11	94	229	68
Future Volume (veh/h)	45	46	26	5	48	81	29	446	11	94	229	68
Initial Q (Qb), veh	0	0	0	0	0	0	0	0	0	0	0	0
Ped-Bike Adj(A_pbT)	1.00		0.97	1.00		1.00	1.00		0.97	1.00		0.97
Parking Bus, Adj	1.00	1.00	1.00	1.00	1.00	1.00	1.00	1.00	1.00	1.00	1.00	1.00
Work Zone On Approach		No			No			No			No	
Adj Sat Flow, veh/h/ln	1870	1870	1870	1870	1870	1870	1870	1870	1870	1870	1870	1870
Adj Flow Rate, veh/h	47	48	27	6	60	0	34	525	13	122	297	88
Peak Hour Factor	0.95	0.95	0.95	0.80	0.80	0.80	0.85	0.85	0.85	0.77	0.77	0.77
Percent Heavy Veh, %	2	2	2	2	2	2	2	2	2	2	2	2
Cap, veh/h	84	534	273	14	706		66	994	430	163	902	261
Arrive On Green	0.05	0.24	0.24	0.01	0.20	0.00	0.04	0.28	0.28	0.09	0.33	0.33
Sat Flow, veh/h	1781	2246	1148	1781	3554	1585	1781	3554	1537	1781	2698	782
Grp Volume(v), veh/h	47	37	38	6	60	0	34	525	13	122	193	192
Grp Sat Flow(s),veh/h/ln	1781	1777	1617	1781	1777	1585	1781	1777	1537	1781	1777	1704
Q Serve(g_s), s	1.4	0.9	1.0	0.2	0.7	0.0	1.0	6.6	0.3	3.5	4.3	4.4
Cycle Q Clear(g_c), s	1.4	0.9	1.0	0.2	0.7	0.0	1.0	6.6	0.3	3.5	4.3	4.4
Prop In Lane	1.00		0.71	1.00		1.00	1.00		1.00	1.00		0.46
Lane Grp Cap(c), veh/h	84	423	385	14	706		66	994	430	163	594	569
V/C Ratio(X)	0.56	0.09	0.10	0.42	0.08		0.51	0.53	0.03	0.75	0.33	0.34
Avail Cap(c_a), veh/h	522	1519	1382	251	2496		420	3329	1440	963	2205	2115
HCM Platoon Ratio	1.00	1.00	1.00	1.00	1.00	1.00	1.00	1.00	1.00	1.00	1.00	1.00
Upstream Filter(I)	1.00	1.00	1.00	1.00	1.00	0.00	1.00	1.00	1.00	1.00	1.00	1.00
Uniform Delay (d), s/veh	24.5	15.6	15.6	25.9	17.2	0.0	24.8	16.0	13.7	23.3	13.1	13.1
Incr Delay (d2), s/veh	5.7	0.1	0.1	18.7	0.1	0.0	6.0	0.4	0.0	6.6	0.3	0.3
Initial Q Delay(d3),s/veh	0.0	0.0	0.0	0.0	0.0	0.0	0.0	0.0	0.0	0.0	0.0	0.0
%ile BackOfQ(50%),veh/ln	0.6	0.3	0.3	0.1	0.3	0.0	0.5	2.3	0.1	1.6	1.4	1.4
Unsig. Movement Delay, s/veh												
LnGrp Delay(d),s/veh	30.2	15.7	15.7	44.6	17.2	0.0	30.8	16.4	13.8	29.9	13.4	13.5
LnGrp LOS	C	B	B	D	B		C	B	B	C	B	B
Approach Vol, veh/h		122			66	A		572			507	
Approach Delay, s/veh		21.3			19.7			17.2			17.4	
Approach LOS		C			B			B			B	

Timer - Assigned Phs	1	2	3	4	5	6	7	8
Phs Duration (G+Y+Rc), s	9.4	20.5	5.0	17.6	6.6	23.4	7.1	15.5
Change Period (Y+Rc), s	4.6	5.8	4.6	5.1	4.6	5.8	4.6	5.1
Max Green Setting (Gmax), s	28.4	49.2	7.4	44.9	12.4	65.2	15.4	36.9
Max Q Clear Time (g_c+I1), s	5.5	8.6	2.2	3.0	3.0	6.4	3.4	2.7
Green Ext Time (p_c), s	0.3	3.7	0.0	0.4	0.0	2.3	0.1	0.3

Intersection Summary	
HCM 6th Ctrl Delay	17.8
HCM 6th LOS	B

Notes

Unsignalized Delay for [WBR] is excluded from calculations of the approach delay and intersection delay.

Intersection	
Intersection Delay, s/veh	73.4
Intersection LOS	F

Movement	EBL	EBT	EBR	WBL	WBT	WBR	NBL	NBT	NBR	SBL	SBT	SBR
Lane Configurations												
Traffic Vol, veh/h	121	150	24	33	230	23	46	117	98	58	46	209
Future Vol, veh/h	121	150	24	33	230	23	46	117	98	58	46	209
Peak Hour Factor	0.69	0.69	0.69	0.73	0.73	0.73	0.67	0.67	0.67	0.77	0.77	0.77
Heavy Vehicles, %	2	2	2	2	2	2	2	2	2	2	2	2
Mvmt Flow	175	217	35	45	315	32	69	175	146	75	60	271
Number of Lanes	0	1	1	0	1	0	0	1	0	0	1	1

Approach	EB	WB	NB	SB
Opposing Approach	WB	EB	SB	NB
Opposing Lanes	1	2	2	1
Conflicting Approach Left	SB	NB	EB	WB
Conflicting Lanes Left	2	1	2	1
Conflicting Approach Right	NB	SB	WB	EB
Conflicting Lanes Right	1	2	1	2
HCM Control Delay	84.3	94.7	88.6	26.7
HCM LOS	F	F	F	D

Lane	NBLn1	EBLn1	EBLn2	WBLn1	SBLn1	SBLn2
Vol Left, %	18%	45%	0%	12%	56%	0%
Vol Thru, %	45%	55%	0%	80%	44%	0%
Vol Right, %	38%	0%	100%	8%	0%	100%
Sign Control	Stop	Stop	Stop	Stop	Stop	Stop
Traffic Vol by Lane	261	271	24	286	104	209
LT Vol	46	121	0	33	58	0
Through Vol	117	150	0	230	46	0
RT Vol	98	0	24	23	0	209
Lane Flow Rate	390	393	35	392	135	271
Geometry Grp	6	7	7	6	7	7
Degree of Util (X)	1.032	1.041	0.083	1.051	0.378	0.682
Departure Headway (Hd)	9.98	9.944	8.977	10.116	10.527	9.498
Convergence, Y/N	Yes	Yes	Yes	Yes	Yes	Yes
Cap	366	369	401	360	344	383
Service Time	7.98	7.644	6.677	8.116	8.227	7.198
HCM Lane V/C Ratio	1.066	1.065	0.087	1.089	0.392	0.708
HCM Control Delay	88.6	90.7	12.5	94.7	19.5	30.3
HCM Lane LOS	F	F	B	F	C	D
HCM 95th-tile Q	12.6	12.9	0.3	13	1.7	4.9

Intersection	
Intersection Delay, s/veh	99.8
Intersection LOS	F

Movement	EBL	EBT	EBR	WBL	WBT	WBR	NBL	NBT	NBR	SBL	SBT	SBR
Lane Configurations												
Traffic Vol, veh/h	49	235	21	0	214	101	20	164	4	120	129	51
Future Vol, veh/h	49	235	21	0	214	101	20	164	4	120	129	51
Peak Hour Factor	0.68	0.68	0.68	0.70	0.70	0.70	0.64	0.64	0.64	0.69	0.69	0.69
Heavy Vehicles, %	2	2	2	2	2	2	2	2	2	2	2	2
Mvmt Flow	72	346	31	0	306	144	31	256	6	174	187	74
Number of Lanes	0	1	0	0	1	0	0	1	0	0	1	0

Approach	EB	WB	NB	SB
Opposing Approach	WB	EB	SB	NB
Opposing Lanes	1	1	1	1
Conflicting Approach Left	SB	NB	EB	WB
Conflicting Lanes Left	1	1	1	1
Conflicting Approach Right	NB	SB	WB	EB
Conflicting Lanes Right	1	1	1	1
HCM Control Delay	118.3	111.3	44	106.6
HCM LOS	F	F	E	F

Lane	NBLn1	EBLn1	WBLn1	SBLn1
Vol Left, %	11%	16%	0%	40%
Vol Thru, %	87%	77%	68%	43%
Vol Right, %	2%	7%	32%	17%
Sign Control	Stop	Stop	Stop	Stop
Traffic Vol by Lane	188	305	315	300
LT Vol	20	49	0	120
Through Vol	164	235	214	129
RT Vol	4	21	101	51
Lane Flow Rate	294	449	450	435
Geometry Grp	1	1	1	1
Degree of Util (X)	0.787	1.13	1.111	1.094
Departure Headway (Hd)	10.764	9.77	9.625	9.808
Convergence, Y/N	Yes	Yes	Yes	Yes
Cap	338	377	383	374
Service Time	8.764	7.77	7.625	7.808
HCM Lane V/C Ratio	0.87	1.191	1.175	1.163
HCM Control Delay	44	118.3	111.3	106.6
HCM Lane LOS	E	F	F	F
HCM 95th-tile Q	6.4	15.8	15.3	14.6

Intersection	
Intersection Delay, s/veh	73.6
Intersection LOS	F

Movement	EBL	EBT	EBR	WBL	WBT	WBR	NBL	NBT	NBR	SBL	SBT	SBR
Lane Configurations												
Traffic Vol, veh/h	97	195	13	26	234	90	8	170	10	51	151	176
Future Vol, veh/h	97	195	13	26	234	90	8	170	10	51	151	176
Peak Hour Factor	0.61	0.61	0.61	0.70	0.70	0.70	0.87	0.87	0.87	0.76	0.76	0.76
Heavy Vehicles, %	2	2	2	2	2	2	2	2	2	2	2	2
Mvmt Flow	159	320	21	37	334	129	9	195	11	67	199	232
Number of Lanes	1	1	0	0	1	0	1	1	0	1	1	0

Approach	EB	WB	NB	SB
Opposing Approach	WB	EB	SB	NB
Opposing Lanes	1	2	2	2
Conflicting Approach Left	SB	NB	EB	WB
Conflicting Lanes Left	2	2	2	1
Conflicting Approach Right	NB	SB	WB	EB
Conflicting Lanes Right	2	2	1	2
HCM Control Delay	35.2	144.9	23.7	62.2
HCM LOS	E	F	C	F

Lane	NBLn1	NBLn2	EBLn1	EBLn2	WBLn1	SBLn1	SBLn2
Vol Left, %	100%	0%	100%	0%	7%	100%	0%
Vol Thru, %	0%	94%	0%	94%	67%	0%	46%
Vol Right, %	0%	6%	0%	6%	26%	0%	54%
Sign Control	Stop	Stop	Stop	Stop	Stop	Stop	Stop
Traffic Vol by Lane	8	180	97	208	350	51	327
LT Vol	8	0	97	0	26	51	0
Through Vol	0	170	0	195	234	0	151
RT Vol	0	10	0	13	90	0	176
Lane Flow Rate	9	207	159	341	500	67	430
Geometry Grp	7	7	7	7	6	7	7
Degree of Util (X)	0.025	0.539	0.407	0.82	1.215	0.169	0.98
Departure Headway (Hd)	10.736	10.166	9.853	9.284	8.748	9.745	8.825
Convergence, Y/N	Yes	Yes	Yes	Yes	Yes	Yes	Yes
Cap	335	358	367	392	415	370	413
Service Time	8.436	7.866	7.553	6.984	6.845	7.445	6.525
HCM Lane V/C Ratio	0.027	0.578	0.433	0.87	1.205	0.181	1.041
HCM Control Delay	13.7	24.1	19.2	42.7	144.9	14.4	69.6
HCM Lane LOS	B	C	C	E	F	B	F
HCM 95th-tile Q	0.1	3.1	1.9	7.4	20.1	0.6	11.7



Movement	EBL	EBT	EBR	WBL	WBT	WBR	NBL	NBT	NBR	SBL	SBT	SBR
Lane Configurations												
Traffic Volume (veh/h)	63	154	31	4	213	74	41	215	1	39	136	98
Future Volume (veh/h)	63	154	31	4	213	74	41	215	1	39	136	98
Initial Q (Qb), veh	0	0	0	0	0	0	0	0	0	0	0	0
Ped-Bike Adj(A_pbT)	0.99		0.95	0.99		0.95	1.00		0.95	1.00		0.95
Parking Bus, Adj	1.00	1.00	1.00	1.00	1.00	1.00	1.00	1.00	1.00	1.00	1.00	1.00
Work Zone On Approach		No			No			No			No	
Adj Sat Flow, veh/h/ln	1870	1870	1870	1870	1870	1870	1870	1870	1870	1870	1870	1870
Adj Flow Rate, veh/h	93	226	46	6	318	110	59	312	1	42	148	107
Peak Hour Factor	0.68	0.68	0.68	0.67	0.67	0.67	0.69	0.69	0.69	0.92	0.92	0.92
Percent Heavy Veh, %	2	2	2	2	2	2	2	2	2	2	2	2
Cap, veh/h	163	326	60	62	420	143	129	544	2	104	274	198
Arrive On Green	0.32	0.32	0.32	0.32	0.32	0.32	0.07	0.29	0.29	0.06	0.28	0.28
Sat Flow, veh/h	277	1016	187	7	1307	446	1781	1863	6	1781	985	712
Grp Volume(v), veh/h	365	0	0	434	0	0	59	0	313	42	0	255
Grp Sat Flow(s),veh/h/ln	1480	0	0	1760	0	0	1781	0	1869	1781	0	1697
Q Serve(g_s), s	0.0	0.0	0.0	0.0	0.0	0.0	1.9	0.0	8.7	1.4	0.0	7.8
Cycle Q Clear(g_c), s	13.5	0.0	0.0	13.5	0.0	0.0	1.9	0.0	8.7	1.4	0.0	7.8
Prop In Lane	0.25		0.13	0.01		0.25	1.00		0.00	1.00		0.42
Lane Grp Cap(c), veh/h	549	0	0	625	0	0	129	0	545	104	0	472
V/C Ratio(X)	0.66	0.00	0.00	0.69	0.00	0.00	0.46	0.00	0.57	0.40	0.00	0.54
Avail Cap(c_a), veh/h	1841	0	0	2164	0	0	271	0	1360	358	0	1307
HCM Platoon Ratio	1.00	1.00	1.00	1.00	1.00	1.00	1.00	1.00	1.00	1.00	1.00	1.00
Upstream Filter(I)	1.00	0.00	0.00	1.00	0.00	0.00	1.00	0.00	1.00	1.00	0.00	1.00
Uniform Delay (d), s/veh	18.3	0.0	0.0	18.7	0.0	0.0	27.2	0.0	18.4	27.8	0.0	18.8
Incr Delay (d2), s/veh	1.4	0.0	0.0	1.4	0.0	0.0	0.9	0.0	4.3	0.9	0.0	4.4
Initial Q Delay(d3),s/veh	0.0	0.0	0.0	0.0	0.0	0.0	0.0	0.0	0.0	0.0	0.0	0.0
%ile BackOfQ(50%),veh/ln	4.3	0.0	0.0	5.2	0.0	0.0	0.8	0.0	3.9	0.6	0.0	3.3
Unsig. Movement Delay, s/veh												
LnGrp Delay(d),s/veh	19.7	0.0	0.0	20.1	0.0	0.0	28.2	0.0	22.8	28.7	0.0	23.2
LnGrp LOS	B	A	A	C	A	A	C	A	C	C	A	C
Approach Vol, veh/h		365			434			372			297	
Approach Delay, s/veh		19.7			20.1			23.6			24.0	
Approach LOS		B			C			C			C	

Timer - Assigned Phs	1	2		4	5	6		8
Phs Duration (G+Y+Rc), s	9.1	24.9		27.1	8.3	25.8		27.1
Change Period (Y+Rc), s	* 4.7	7.9		7.5	* 4.7	* 7.9		7.5
Max Green Setting (Gmax), s	* 9.3	47.1		73.5	* 12	* 45		73.5
Max Q Clear Time (g_c+I1), s	3.9	9.8		15.5	3.4	10.7		15.5
Green Ext Time (p_c), s	0.0	5.1		3.3	0.0	6.0		2.9

Intersection Summary		
HCM 6th Ctrl Delay	21.7	
HCM 6th LOS	C	

Notes

* HCM 6th computational engine requires equal clearance times for the phases crossing the barrier.

Intersection	
Int Delay, s/veh	2.5

Movement	EBL	EBT	EBR	WBL	WBT	WBR	NBL	NBT	NBR	SBL	SBT	SBR
Lane Configurations		↕			↕			↕			↕	
Traffic Vol, veh/h	14	179	0	0	251	35	0	0	0	32	0	34
Future Vol, veh/h	14	179	0	0	251	35	0	0	0	32	0	34
Conflicting Peds, #/hr	10	0	10	10	0	10	10	0	10	10	0	10
Sign Control	Free	Free	Free	Free	Free	Free	Stop	Stop	Stop	Stop	Stop	Stop
RT Channelized	-	-	None	-	-	None	-	-	None	-	-	None
Storage Length	-	-	-	-	-	-	-	-	-	-	-	-
Veh in Median Storage, #	-	0	-	-	0	-	-	0	-	-	0	-
Grade, %	-	0	-	-	0	-	-	0	-	-	0	-
Peak Hour Factor	75	75	92	92	77	77	92	92	92	57	92	57
Heavy Vehicles, %	2	2	2	2	2	2	2	2	2	2	2	2
Mvmt Flow	19	239	0	0	326	45	0	0	0	56	0	60

Major/Minor	Major1			Major2			Minor1			Minor2		
Conflicting Flow All	381	0	0	249	0	0	676	668	259	646	646	369
Stage 1	-	-	-	-	-	-	287	287	-	359	359	-
Stage 2	-	-	-	-	-	-	389	381	-	287	287	-
Critical Hdwy	4.12	-	-	4.12	-	-	7.12	6.52	6.22	7.12	6.52	6.22
Critical Hdwy Stg 1	-	-	-	-	-	-	6.12	5.52	-	6.12	5.52	-
Critical Hdwy Stg 2	-	-	-	-	-	-	6.12	5.52	-	6.12	5.52	-
Follow-up Hdwy	2.218	-	-	2.218	-	-	3.518	4.018	3.318	3.518	4.018	3.318
Pot Cap-1 Maneuver	1177	-	-	1317	-	-	367	379	780	385	390	677
Stage 1	-	-	-	-	-	-	720	674	-	659	627	-
Stage 2	-	-	-	-	-	-	635	613	-	720	674	-
Platoon blocked, %		-	-		-	-						
Mov Cap-1 Maneuver	1166	-	-	1304	-	-	323	364	765	372	375	664
Mov Cap-2 Maneuver	-	-	-	-	-	-	323	364	-	372	375	-
Stage 1	-	-	-	-	-	-	700	654	-	641	621	-
Stage 2	-	-	-	-	-	-	572	607	-	700	654	-

Approach	EB	WB	NB	SB
HCM Control Delay, s	0.6	0	0	14.8
HCM LOS			A	B

Minor Lane/Major Mvmt	NBLn1	EBL	EBT	EBR	WBL	WBT	WBR	SBLn1
Capacity (veh/h)	-	1166	-	-	1304	-	-	481
HCM Lane V/C Ratio	-	0.016	-	-	-	-	-	0.241
HCM Control Delay (s)	0	8.1	0	-	0	-	-	14.8
HCM Lane LOS	A	A	A	-	A	-	-	B
HCM 95th %tile Q(veh)	-	0	-	-	0	-	-	0.9

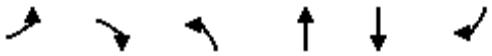

Movement	EBL	EBR	NBL	NBT	SBT	SBR
Lane Configurations						
Traffic Volume (veh/h)	56	157	235	532	209	49
Future Volume (veh/h)	56	157	235	532	209	49
Initial Q (Qb), veh	0	0	0	0	0	0
Ped-Bike Adj(A_pbT)	1.00	1.00	1.00			0.95
Parking Bus, Adj	1.00	1.00	1.00	1.00	1.00	1.00
Work Zone On Approach	No			No	No	
Adj Sat Flow, veh/h/ln	1870	1870	1870	1870	1870	1870
Adj Flow Rate, veh/h	68	191	287	649	258	60
Peak Hour Factor	0.82	0.82	0.82	0.82	0.81	0.81
Percent Heavy Veh, %	2	2	2	2	2	2
Cap, veh/h	261	571	380	1076	378	88
Arrive On Green	0.15	0.15	0.21	0.58	0.26	0.26
Sat Flow, veh/h	1781	1585	1781	1870	1450	337
Grp Volume(v), veh/h	68	191	287	649	0	318
Grp Sat Flow(s),veh/h/ln	1781	1585	1781	1870	0	1787
Q Serve(g_s), s	1.3	3.5	6.0	8.9	0.0	6.3
Cycle Q Clear(g_c), s	1.3	3.5	6.0	8.9	0.0	6.3
Prop In Lane	1.00	1.00	1.00			0.19
Lane Grp Cap(c), veh/h	261	571	380	1076	0	466
V/C Ratio(X)	0.26	0.33	0.75	0.60	0.00	0.68
Avail Cap(c_a), veh/h	901	1140	2522	5626	0	2666
HCM Platoon Ratio	1.00	1.00	1.00	1.00	1.00	1.00
Upstream Filter(I)	1.00	1.00	1.00	1.00	0.00	1.00
Uniform Delay (d), s/veh	15.0	9.2	14.6	5.5	0.0	13.2
Incr Delay (d2), s/veh	0.5	0.3	3.1	0.5	0.0	1.8
Initial Q Delay(d3),s/veh	0.0	0.0	0.0	0.0	0.0	0.0
%ile BackOfQ(50%),veh/ln	0.5	3.5	2.1	1.5	0.0	2.1
Unsig. Movement Delay, s/veh						
LnGrp Delay(d),s/veh	15.5	9.5	17.6	6.0	0.0	14.9
LnGrp LOS	B	A	B	A	A	B
Approach Vol, veh/h	259			936	318	
Approach Delay, s/veh	11.1			9.6	14.9	
Approach LOS	B			A	B	

Timer - Assigned Phs		2		4	5	6
Phs Duration (G+Y+Rc), s		28.8		10.8	12.4	16.3
Change Period (Y+Rc), s		6.0		5.0	4.0	6.0
Max Green Setting (Gmax), s		119.0		20.0	56.0	59.0
Max Q Clear Time (g_c+I1), s		10.9		5.5	8.0	8.3
Green Ext Time (p_c), s		4.8		0.7	0.8	2.0

Intersection Summary		
HCM 6th Ctrl Delay		11.0
HCM 6th LOS		B



Movement	WBL	WBR	NBT	NBR	SBL	SBT
Lane Configurations						
Traffic Volume (veh/h)	40	31	533	55	7	217
Future Volume (veh/h)	40	31	533	55	7	217
Initial Q (Qb), veh	0	0	0	0	0	0
Ped-Bike Adj(A_pbT)	1.00	1.00		0.96	1.00	
Parking Bus, Adj	1.00	1.00	1.00	1.00	1.00	1.00
Work Zone On Approach	No		No			No
Adj Sat Flow, veh/h/ln	1870	1870	1870	1870	1870	1870
Adj Flow Rate, veh/h	60	46	658	68	9	265
Peak Hour Factor	0.67	0.67	0.81	0.81	0.82	0.82
Percent Heavy Veh, %	2	2	2	2	2	2
Cap, veh/h	156	157	858	89	21	1181
Arrive On Green	0.09	0.09	0.52	0.52	0.01	0.63
Sat Flow, veh/h	1781	1585	1660	172	1781	1870
Grp Volume(v), veh/h	60	46	0	726	9	265
Grp Sat Flow(s),veh/h/ln	1781	1585	0	1832	1781	1870
Q Serve(g_s), s	1.2	1.1	0.0	12.4	0.2	2.4
Cycle Q Clear(g_c), s	1.2	1.1	0.0	12.4	0.2	2.4
Prop In Lane	1.00	1.00		0.09	1.00	
Lane Grp Cap(c), veh/h	156	157	0	947	21	1181
V/C Ratio(X)	0.39	0.29	0.00	0.77	0.42	0.22
Avail Cap(c_a), veh/h	683	627	0	5154	456	5932
HCM Platoon Ratio	1.00	1.00	1.00	1.00	1.00	1.00
Upstream Filter(I)	1.00	1.00	0.00	1.00	1.00	1.00
Uniform Delay (d), s/veh	16.8	16.3	0.0	7.6	19.2	3.1
Incr Delay (d2), s/veh	1.6	1.0	0.0	1.3	12.9	0.1
Initial Q Delay(d3),s/veh	0.0	0.0	0.0	0.0	0.0	0.0
%ile BackOfQ(50%),veh/ln	0.5	0.4	0.0	2.6	0.1	0.2
Unsig. Movement Delay, s/veh						
LnGrp Delay(d),s/veh	18.4	17.3	0.0	8.9	32.1	3.2
LnGrp LOS	B	B	A	A	C	A
Approach Vol, veh/h	106		726			274
Approach Delay, s/veh	17.9		8.9			4.1
Approach LOS	B		A			A

Timer - Assigned Phs	1	2				6	8
Phs Duration (G+Y+Rc), s	4.5	26.2				30.7	8.4
Change Period (Y+Rc), s	4.0	6.0				6.0	5.0
Max Green Setting (Gmax), s	10.0	110.0				124.0	15.0
Max Q Clear Time (g_c+I1), s	2.2	14.4				4.4	3.2
Green Ext Time (p_c), s	0.0	5.8				1.6	0.2

Intersection Summary	
HCM 6th Ctrl Delay	8.6
HCM 6th LOS	A



Movement	EBL	EBT	EBR	WBL	WBT	WBR	NBL	NBT	NBR	SBL	SBT	SBR
Lane Configurations												
Traffic Volume (veh/h)	4	52	5	21	63	118	5	21	40	15	4	4
Future Volume (veh/h)	4	52	5	21	63	118	5	21	40	15	4	4
Initial Q (Qb), veh	0	0	0	0	0	0	0	0	0	0	0	0
Ped-Bike Adj(A_pbT)	1.00		0.90	1.00		0.92	0.99		0.98	1.00		0.96
Parking Bus, Adj	1.00	1.00	1.00	1.00	1.00	1.00	1.00	1.00	1.00	1.00	1.00	1.00
Work Zone On Approach		No			No			No			No	
Adj Sat Flow, veh/h/ln	1870	1870	1870	1870	1870	1870	1870	1870	1870	1870	1870	1870
Adj Flow Rate, veh/h	7	96	9	26	78	146	7	29	55	22	6	6
Peak Hour Factor	0.54	0.54	0.54	0.81	0.81	0.81	0.73	0.73	0.73	0.69	0.69	0.69
Percent Heavy Veh, %	2	2	2	2	2	2	2	2	2	2	2	2
Cap, veh/h	11	157	15	65	195	205	84	317	544	813	461	461
Arrive On Green	0.10	0.10	0.10	0.14	0.14	0.14	0.55	0.55	0.55	0.55	0.55	0.55
Sat Flow, veh/h	114	1559	146	462	1385	1458	71	579	992	1308	841	841
Grp Volume(v), veh/h	112	0	0	104	0	146	91	0	0	22	0	12
Grp Sat Flow(s),veh/h/ln	1818	0	0	1847	0	1458	1642	0	0	1308	0	1682
Q Serve(g_s), s	5.1	0.0	0.0	4.4	0.0	8.2	0.0	0.0	0.0	0.0	0.0	0.3
Cycle Q Clear(g_c), s	5.1	0.0	0.0	4.4	0.0	8.2	2.2	0.0	0.0	0.5	0.0	0.3
Prop In Lane	0.06		0.08	0.25		1.00	0.08		0.60	1.00		0.50
Lane Grp Cap(c), veh/h	183	0	0	260	0	205	946	0	0	813	0	923
V/C Ratio(X)	0.61	0.00	0.00	0.40	0.00	0.71	0.10	0.00	0.00	0.03	0.00	0.01
Avail Cap(c_a), veh/h	764	0	0	1056	0	834	946	0	0	813	0	923
HCM Platoon Ratio	1.00	1.00	1.00	1.00	1.00	1.00	1.00	1.00	1.00	1.00	1.00	1.00
Upstream Filter(I)	1.00	0.00	0.00	1.00	0.00	1.00	1.00	0.00	0.00	1.00	0.00	1.00
Uniform Delay (d), s/veh	36.9	0.0	0.0	33.5	0.0	35.2	9.2	0.0	0.0	8.8	0.0	8.8
Incr Delay (d2), s/veh	1.2	0.0	0.0	0.4	0.0	1.7	0.2	0.0	0.0	0.1	0.0	0.0
Initial Q Delay(d3),s/veh	0.0	0.0	0.0	0.0	0.0	0.0	0.0	0.0	0.0	0.0	0.0	0.0
%ile BackOfQ(50%),veh/ln	2.3	0.0	0.0	1.9	0.0	2.9	0.8	0.0	0.0	0.2	0.0	0.1
Unsig. Movement Delay, s/veh												
LnGrp Delay(d),s/veh	38.1	0.0	0.0	33.9	0.0	36.9	9.4	0.0	0.0	8.9	0.0	8.8
LnGrp LOS	D	A	A	C	A	D	A	A	A	A	A	A
Approach Vol, veh/h		112			250			91			34	
Approach Delay, s/veh		38.1			35.6			9.4			8.9	
Approach LOS		D			D			A			A	

Timer - Assigned Phs	2	4	6	8
Phs Duration (G+Y+Rc), s	53.0	14.6	53.0	18.1
Change Period (Y+Rc), s	6.0	6.0	6.0	6.0
Max Green Setting (Gmax), s	47.0	36.0	47.0	49.0
Max Q Clear Time (g_c+I1), s	4.2	7.1	2.5	10.2
Green Ext Time (p_c), s	0.1	0.4	0.2	0.6

Intersection Summary	
HCM 6th Ctrl Delay	29.5
HCM 6th LOS	C



Movement	EBL	EBT	EBR	WBL	WBT	WBR	NBL	NBT	NBR	SBL	SBT	SBR
Lane Configurations												
Traffic Volume (veh/h)	58	19	33	1	44	27	124	1191	19	20	961	37
Future Volume (veh/h)	58	19	33	1	44	27	124	1191	19	20	961	37
Initial Q (Qb), veh	0	0	0	0	0	0	0	0	0	0	0	0
Ped-Bike Adj(A_pbT)	1.00		0.94	1.00		0.96	1.00		0.96	1.00		0.98
Parking Bus, Adj	1.00	1.00	1.00	1.00	1.00	1.00	1.00	1.00	1.00	1.00	1.00	1.00
Work Zone On Approach		No			No			No			No	
Adj Sat Flow, veh/h/ln	1870	1870	1870	1870	1870	1870	1870	1870	1870	1870	1870	1870
Adj Flow Rate, veh/h	74	24	42	1	56	35	155	1489	24	26	1264	49
Peak Hour Factor	0.78	0.78	0.78	0.78	0.78	0.78	0.80	0.80	0.80	0.76	0.76	0.76
Percent Heavy Veh, %	2	2	2	2	2	2	2	2	2	2	2	2
Cap, veh/h	135	452	867	5	316	256	284	1722	28	86	1590	813
Arrive On Green	0.08	0.24	0.24	0.00	0.17	0.17	0.08	0.48	0.48	0.05	0.45	0.45
Sat Flow, veh/h	1781	1870	2636	1781	1870	1518	3456	3577	58	1781	3554	1548
Grp Volume(v), veh/h	74	24	42	1	56	35	155	739	774	26	1264	49
Grp Sat Flow(s),veh/h/ln	1781	1870	1318	1781	1870	1518	1728	1777	1857	1781	1777	1548
Q Serve(g_s), s	4.8	1.2	1.3	0.1	3.1	2.4	5.2	44.6	44.8	1.7	36.9	1.9
Cycle Q Clear(g_c), s	4.8	1.2	1.3	0.1	3.1	2.4	5.2	44.6	44.8	1.7	36.9	1.9
Prop In Lane	1.00		1.00	1.00		1.00	1.00		0.03	1.00		1.00
Lane Grp Cap(c), veh/h	135	452	867	5	316	256	284	855	894	86	1590	813
V/C Ratio(X)	0.55	0.05	0.05	0.21	0.18	0.14	0.55	0.86	0.87	0.30	0.80	0.06
Avail Cap(c_a), veh/h	147	712	1232	147	712	578	286	855	894	147	1667	846
HCM Platoon Ratio	1.00	1.00	1.00	1.00	1.00	1.00	1.00	1.00	1.00	1.00	1.00	1.00
Upstream Filter(I)	1.00	1.00	1.00	1.00	1.00	1.00	1.00	1.00	1.00	1.00	1.00	1.00
Uniform Delay (d), s/veh	53.9	35.2	28.1	60.1	43.1	42.7	53.3	27.8	27.9	55.6	28.7	14.2
Incr Delay (d2), s/veh	1.4	0.1	0.0	7.5	0.6	0.5	1.2	11.3	11.0	0.7	4.2	0.1
Initial Q Delay(d3),s/veh	0.0	0.0	0.0	0.0	0.0	0.0	0.0	0.0	0.0	0.0	0.0	0.0
%ile BackOfQ(50%),veh/ln	2.2	0.6	0.4	0.0	1.5	0.9	2.2	19.6	20.5	0.8	15.2	0.7
Unsig. Movement Delay, s/veh												
LnGrp Delay(d),s/veh	55.2	35.3	28.1	67.7	43.6	43.3	54.5	39.1	38.9	56.3	32.9	14.3
LnGrp LOS	E	D	C	E	D	D	D	D	D	E	C	B
Approach Vol, veh/h		140			92			1668			1339	
Approach Delay, s/veh		43.7			43.7			40.4			32.6	
Approach LOS		D			D			D			C	

Timer - Assigned Phs	1	2	3	4	5	6	7	8
Phs Duration (G+Y+Rc), s	11.5	66.6	6.0	36.7	15.6	62.5	14.9	27.9
Change Period (Y+Rc), s	* 5.7	* 8.4	* 5.7	7.5	* 5.7	* 8.4	* 5.7	7.5
Max Green Setting (Gmax), s	* 6	* 57	* 10	46.0	* 10	* 57	* 10	46.0
Max Q Clear Time (g_c+I1), s	10.7	46.8	2.1	3.3	7.2	38.9	6.8	5.1
Green Ext Time (p_c), s	0.0	9.3	0.0	0.6	0.1	15.2	0.0	0.9

Intersection Summary	
HCM 6th Ctrl Delay	37.4
HCM 6th LOS	D

Notes

* HCM 6th computational engine requires equal clearance times for the phases crossing the barrier.

Intersection	
Int Delay, s/veh	2.5

Movement	WBL	WBR	NBT	NBR	SBL	SBT
Lane Configurations						
Traffic Vol, veh/h	16	72	186	6	25	147
Future Vol, veh/h	16	72	186	6	25	147
Conflicting Peds, #/hr	10	10	0	10	10	0
Sign Control	Stop	Stop	Free	Free	Free	Free
RT Channelized	-	None	-	None	-	None
Storage Length	0	-	-	-	-	-
Veh in Median Storage, #	0	-	0	-	-	0
Grade, %	0	-	0	-	-	0
Peak Hour Factor	92	92	92	92	92	92
Heavy Vehicles, %	2	2	2	2	2	2
Mvmt Flow	17	78	202	7	27	160

Major/Minor	Minor1		Major1		Major2	
Conflicting Flow All	440	226	0	0	219	0
Stage 1	216	-	-	-	-	-
Stage 2	224	-	-	-	-	-
Critical Hdwy	6.42	6.22	-	-	4.12	-
Critical Hdwy Stg 1	5.42	-	-	-	-	-
Critical Hdwy Stg 2	5.42	-	-	-	-	-
Follow-up Hdwy	3.518	3.318	-	-	2.218	-
Pot Cap-1 Maneuver	574	813	-	-	1350	-
Stage 1	820	-	-	-	-	-
Stage 2	813	-	-	-	-	-
Platoon blocked, %			-	-		-
Mov Cap-1 Maneuver	550	798	-	-	1337	-
Mov Cap-2 Maneuver	550	-	-	-	-	-
Stage 1	812	-	-	-	-	-
Stage 2	788	-	-	-	-	-

Approach	WB	NB	SB
HCM Control Delay, s	10.6	0	1.1
HCM LOS	B		

Minor Lane/Major Mvmt	NBT	NBR	WBLn1	SBL	SBT
Capacity (veh/h)	-	-	738	1337	-
HCM Lane V/C Ratio	-	-	0.13	0.02	-
HCM Control Delay (s)	-	-	10.6	7.7	0
HCM Lane LOS	-	-	B	A	A
HCM 95th %tile Q(veh)	-	-	0.4	0.1	-

Intersection	
Int Delay, s/veh	5

Movement	EBL	EBR	NBL	NBT	SBT	SBR
Lane Configurations						
Traffic Vol, veh/h	94	59	22	729	334	31
Future Vol, veh/h	94	59	22	729	334	31
Conflicting Peds, #/hr	10	10	10	0	0	10
Sign Control	Stop	Stop	Free	Free	Free	Free
RT Channelized	-	None	-	None	-	None
Storage Length	0	-	410	-	-	80
Veh in Median Storage, #	0	-	-	0	0	-
Grade, %	0	-	-	0	0	-
Peak Hour Factor	92	92	92	92	92	92
Heavy Vehicles, %	2	2	2	2	2	2
Mvmt Flow	102	64	24	792	363	34

Major/Minor	Minor2		Major1		Major2	
Conflicting Flow All	1223	383	407	0	-	0
Stage 1	373	-	-	-	-	-
Stage 2	850	-	-	-	-	-
Critical Hdwy	6.42	6.22	4.12	-	-	-
Critical Hdwy Stg 1	5.42	-	-	-	-	-
Critical Hdwy Stg 2	5.42	-	-	-	-	-
Follow-up Hdwy	3.518	3.318	2.218	-	-	-
Pot Cap-1 Maneuver	198	664	1152	-	-	-
Stage 1	696	-	-	-	-	-
Stage 2	419	-	-	-	-	-
Platoon blocked, %				-	-	-
Mov Cap-1 Maneuver	190	651	1141	-	-	-
Mov Cap-2 Maneuver	190	-	-	-	-	-
Stage 1	674	-	-	-	-	-
Stage 2	415	-	-	-	-	-

Approach	EB	NB	SB
HCM Control Delay, s	40.2	0.2	0
HCM LOS	E		

Minor Lane/Major Mvmt	NBL	NBT	EBLn1	SBT	SBR
Capacity (veh/h)	1141	-	261	-	-
HCM Lane V/C Ratio	0.021	-	0.637	-	-
HCM Control Delay (s)	8.2	-	40.2	-	-
HCM Lane LOS	A	-	E	-	-
HCM 95th %tile Q(veh)	0.1	-	4	-	-

Intersection	
Int Delay, s/veh	6.6

Movement	EBL	EBT	WBT	WBR	SBL	SBR
Lane Configurations						
Traffic Vol, veh/h	0	0	0	5	15	0
Future Vol, veh/h	0	0	0	5	15	0
Conflicting Peds, #/hr	10	0	0	10	10	10
Sign Control	Free	Free	Free	Free	Stop	Stop
RT Channelized	-	None	-	None	-	None
Storage Length	-	-	-	-	0	-
Veh in Median Storage, #	-	0	0	-	0	-
Grade, %	-	0	0	-	0	-
Peak Hour Factor	92	92	92	92	92	92
Heavy Vehicles, %	2	2	2	2	2	2
Mvmt Flow	0	0	0	5	16	0

Major/Minor	Major1		Major2		Minor2	
Conflicting Flow All	15	0	-	0	23	23
Stage 1	-	-	-	-	13	-
Stage 2	-	-	-	-	10	-
Critical Hdwy	4.12	-	-	-	6.42	6.22
Critical Hdwy Stg 1	-	-	-	-	5.42	-
Critical Hdwy Stg 2	-	-	-	-	5.42	-
Follow-up Hdwy	2.218	-	-	-	3.518	3.318
Pot Cap-1 Maneuver	1603	-	-	-	993	1054
Stage 1	-	-	-	-	1010	-
Stage 2	-	-	-	-	1013	-
Platoon blocked, %		-	-	-		
Mov Cap-1 Maneuver	1588	-	-	-	973	1034
Mov Cap-2 Maneuver	-	-	-	-	973	-
Stage 1	-	-	-	-	1000	-
Stage 2	-	-	-	-	1003	-

Approach	EB	WB	SB
HCM Control Delay, s	0	0	8.8
HCM LOS			A

Minor Lane/Major Mvmt	EBL	EBT	WBT	WBR	SBLn1
Capacity (veh/h)	1588	-	-	-	973
HCM Lane V/C Ratio	-	-	-	-	0.017
HCM Control Delay (s)	0	-	-	-	8.8
HCM Lane LOS	A	-	-	-	A
HCM 95th %tile Q(veh)	0	-	-	-	0.1

Intersection	
Int Delay, s/veh	3.3

Movement	EBL	EBT	WBT	WBR	SBL	SBR
Lane Configurations						
Traffic Vol, veh/h	0	15	5	5	15	0
Future Vol, veh/h	0	15	5	5	15	0
Conflicting Peds, #/hr	10	0	0	10	10	10
Sign Control	Free	Free	Free	Free	Stop	Stop
RT Channelized	-	None	-	None	-	None
Storage Length	-	-	-	-	0	-
Veh in Median Storage, #	-	0	0	-	0	-
Grade, %	-	0	0	-	0	-
Peak Hour Factor	92	92	92	92	92	92
Heavy Vehicles, %	2	2	2	2	2	2
Mvmt Flow	0	16	5	5	16	0

Major/Minor	Major1		Major2		Minor2	
Conflicting Flow All	20	0	-	0	44	28
Stage 1	-	-	-	-	18	-
Stage 2	-	-	-	-	26	-
Critical Hdwy	4.12	-	-	-	6.42	6.22
Critical Hdwy Stg 1	-	-	-	-	5.42	-
Critical Hdwy Stg 2	-	-	-	-	5.42	-
Follow-up Hdwy	2.218	-	-	-	3.518	3.318
Pot Cap-1 Maneuver	1596	-	-	-	967	1047
Stage 1	-	-	-	-	1005	-
Stage 2	-	-	-	-	997	-
Platoon blocked, %		-	-	-		
Mov Cap-1 Maneuver	1581	-	-	-	948	1027
Mov Cap-2 Maneuver	-	-	-	-	948	-
Stage 1	-	-	-	-	995	-
Stage 2	-	-	-	-	987	-

Approach	EB	WB	SB
HCM Control Delay, s	0	0	8.9
HCM LOS			A

Minor Lane/Major Mvmt	EBL	EBT	WBT	WBR	SBLn1
Capacity (veh/h)	1581	-	-	-	948
HCM Lane V/C Ratio	-	-	-	-	0.017
HCM Control Delay (s)	0	-	-	-	8.9
HCM Lane LOS	A	-	-	-	A
HCM 95th %tile Q(veh)	0	-	-	-	0.1

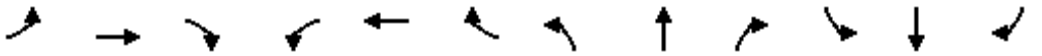

Movement	EBL	EBT	EBR	WBL	WBT	WBR	NBL	NBT	NBR	SBL	SBT	SBR
Lane Configurations												
Traffic Volume (veh/h)	126	104	113	202	75	251	43	308	35	139	164	41
Future Volume (veh/h)	126	104	113	202	75	251	43	308	35	139	164	41
Initial Q (Qb), veh	0	0	0	0	0	0	0	0	0	0	0	0
Ped-Bike Adj(A_pbT)	1.00		0.97	1.00		0.95	1.00		0.97	1.00		0.97
Parking Bus, Adj	1.00	1.00	1.00	1.00	1.00	1.00	1.00	1.00	1.00	1.00	1.00	1.00
Work Zone On Approach		No			No			No			No	
Adj Sat Flow, veh/h/ln	1870	1870	1870	1870	1870	1870	1870	1870	1870	1870	1870	1870
Adj Flow Rate, veh/h	173	142	155	262	97	326	51	362	41	165	195	49
Peak Hour Factor	0.73	0.73	0.73	0.77	0.77	0.77	0.85	0.85	0.85	0.84	0.84	0.84
Percent Heavy Veh, %	2	2	2	2	2	2	2	2	2	2	2	2
Cap, veh/h	227	433	354	303	512	412	176	445	50	206	808	197
Arrive On Green	0.13	0.23	0.23	0.17	0.27	0.27	0.10	0.27	0.27	0.12	0.29	0.29
Sat Flow, veh/h	1781	1870	1531	1781	1870	1504	1781	1644	186	1781	2812	687
Grp Volume(v), veh/h	173	142	155	262	97	326	51	0	403	165	121	123
Grp Sat Flow(s),veh/h/ln	1781	1870	1531	1781	1870	1504	1781	0	1830	1781	1777	1722
Q Serve(g_s), s	8.0	5.4	7.3	12.1	3.4	17.0	2.3	0.0	17.5	7.7	4.4	4.6
Cycle Q Clear(g_c), s	8.0	5.4	7.3	12.1	3.4	17.0	2.3	0.0	17.5	7.7	4.4	4.6
Prop In Lane	1.00		1.00	1.00		1.00	1.00		0.10	1.00		0.40
Lane Grp Cap(c), veh/h	227	433	354	303	512	412	176	0	495	206	511	495
V/C Ratio(X)	0.76	0.33	0.44	0.87	0.19	0.79	0.29	0.00	0.81	0.80	0.24	0.25
Avail Cap(c_a), veh/h	378	507	415	546	684	550	252	0	777	357	859	833
HCM Platoon Ratio	1.00	1.00	1.00	1.00	1.00	1.00	1.00	1.00	1.00	1.00	1.00	1.00
Upstream Filter(I)	1.00	1.00	1.00	1.00	1.00	1.00	1.00	0.00	1.00	1.00	1.00	1.00
Uniform Delay (d), s/veh	35.7	27.1	27.9	34.2	23.6	28.5	35.4	0.0	28.9	36.6	23.1	23.2
Incr Delay (d2), s/veh	2.0	0.6	1.2	2.9	0.3	6.7	0.3	0.0	5.0	2.8	0.3	0.4
Initial Q Delay(d3),s/veh	0.0	0.0	0.0	0.0	0.0	0.0	0.0	0.0	0.0	0.0	0.0	0.0
%ile BackOfQ(50%),veh/ln	3.5	2.4	2.7	5.4	1.5	6.7	1.0	0.0	7.8	3.4	1.8	1.9
Unsig. Movement Delay, s/veh												
LnGrp Delay(d),s/veh	37.7	27.7	29.1	37.2	23.8	35.3	35.8	0.0	33.9	39.3	23.4	23.6
LnGrp LOS	D	C	C	D	C	D	D	A	C	D	C	C
Approach Vol, veh/h		470			685			454			409	
Approach Delay, s/veh		31.9			34.4			34.1			29.9	
Approach LOS		C			C			C			C	

Timer - Assigned Phs	1	2	3	4	5	6	7	8
Phs Duration (G+Y+Rc), s	13.8	29.0	18.4	23.6	12.4	30.4	14.8	27.2
Change Period (Y+Rc), s	4.0	6.0	4.0	4.0	4.0	6.0	4.0	4.0
Max Green Setting (Gmax), s	17.0	36.0	26.0	23.0	12.0	41.0	18.0	31.0
Max Q Clear Time (g_c+I1), s	9.7	19.5	14.1	9.3	4.3	6.6	10.0	19.0
Green Ext Time (p_c), s	0.1	2.9	0.3	1.6	0.0	2.1	0.1	2.1

Intersection Summary	
HCM 6th Ctrl Delay	32.8
HCM 6th LOS	C

Intersection	
Intersection Delay, s/veh	53.8
Intersection LOS	F

Movement	EBL	EBT	EBR	WBL	WBT	WBR	NBL	NBT	NBR	SBL	SBT	SBR
Lane Configurations												
Traffic Vol, veh/h	11	131	113	30	201	144	138	143	14	223	145	64
Future Vol, veh/h	11	131	113	30	201	144	138	143	14	223	145	64
Peak Hour Factor	0.77	0.77	0.77	0.83	0.83	0.83	0.85	0.85	0.85	0.83	0.83	0.83
Heavy Vehicles, %	2	2	2	2	2	2	2	2	2	2	2	2
Mvmt Flow	14	170	147	36	242	173	162	168	16	269	175	77
Number of Lanes	0	1	1	0	1	1	0	1	0	0	1	0

Approach	EB	WB	NB	SB
Opposing Approach	WB	EB	SB	NB
Opposing Lanes	2	2	1	1
Conflicting Approach Left	SB	NB	EB	WB
Conflicting Lanes Left	1	1	2	2
Conflicting Approach Right	NB	SB	WB	EB
Conflicting Lanes Right	1	1	2	2
HCM Control Delay	18	23.5	37.5	113.9
HCM LOS	C	C	E	F

Lane	NBLn1	EBLn1	EBLn2	WBLn1	WBLn2	SBLn1
Vol Left, %	47%	8%	0%	13%	0%	52%
Vol Thru, %	48%	92%	0%	87%	0%	34%
Vol Right, %	5%	0%	100%	0%	100%	15%
Sign Control	Stop	Stop	Stop	Stop	Stop	Stop
Traffic Vol by Lane	295	142	113	231	144	432
LT Vol	138	11	0	30	0	223
Through Vol	143	131	0	201	0	145
RT Vol	14	0	113	0	144	64
Lane Flow Rate	347	184	147	278	173	520
Geometry Grp	2	7	7	7	7	2
Degree of Util (X)	0.792	0.453	0.333	0.663	0.381	1.141
Departure Headway (Hd)	8.667	9.462	8.686	9.157	8.356	7.89
Convergence, Y/N	Yes	Yes	Yes	Yes	Yes	Yes
Cap	420	384	417	398	434	463
Service Time	6.667	7.162	6.386	6.857	6.056	5.927
HCM Lane V/C Ratio	0.826	0.479	0.353	0.698	0.399	1.123
HCM Control Delay	37.5	19.8	15.7	28.1	16.1	113.9
HCM Lane LOS	E	C	C	D	C	F
HCM 95th-tile Q	7	2.3	1.4	4.6	1.8	18.5

Intersection	
Int Delay, s/veh	2.7

Movement	EBL	EBT	EBR	WBL	WBT	WBR	NBL	NBT	NBR	SBL	SBT	SBR
Lane Configurations		↕			↕			↕			↕	
Traffic Vol, veh/h	2	243	14	4	236	3	24	3	7	10	4	2
Future Vol, veh/h	2	243	14	4	236	3	24	3	7	10	4	2
Conflicting Peds, #/hr	10	0	10	10	0	10	10	0	10	10	0	10
Sign Control	Free	Free	Free	Free	Free	Free	Stop	Stop	Stop	Stop	Stop	Stop
RT Channelized	-	-	None	-	-	None	-	-	None	-	-	None
Storage Length	-	-	-	-	-	-	-	-	-	-	-	-
Veh in Median Storage, #	-	0	-	-	0	-	-	0	-	-	0	-
Grade, %	-	0	-	-	0	-	-	0	-	-	0	-
Peak Hour Factor	88	88	88	80	80	80	58	58	58	25	25	25
Heavy Vehicles, %	2	2	2	2	2	2	2	2	2	2	2	2
Mvmt Flow	2	276	16	5	295	4	41	5	12	40	16	8

Major/Minor	Major1			Major2			Minor1			Minor2		
Conflicting Flow All	309	0	0	302	0	0	627	617	304	624	623	317
Stage 1	-	-	-	-	-	-	298	298	-	317	317	-
Stage 2	-	-	-	-	-	-	329	319	-	307	306	-
Critical Hdwy	4.12	-	-	4.12	-	-	7.12	6.52	6.22	7.12	6.52	6.22
Critical Hdwy Stg 1	-	-	-	-	-	-	6.12	5.52	-	6.12	5.52	-
Critical Hdwy Stg 2	-	-	-	-	-	-	6.12	5.52	-	6.12	5.52	-
Follow-up Hdwy	2.218	-	-	2.218	-	-	3.518	4.018	3.318	3.518	4.018	3.318
Pot Cap-1 Maneuver	1252	-	-	1259	-	-	396	405	736	398	402	724
Stage 1	-	-	-	-	-	-	711	667	-	694	654	-
Stage 2	-	-	-	-	-	-	684	653	-	703	662	-
Platoon blocked, %		-	-		-	-						
Mov Cap-1 Maneuver	1240	-	-	1247	-	-	370	394	722	378	391	710
Mov Cap-2 Maneuver	-	-	-	-	-	-	370	394	-	378	391	-
Stage 1	-	-	-	-	-	-	702	659	-	686	644	-
Stage 2	-	-	-	-	-	-	650	643	-	678	654	-

Approach	EB	WB	NB	SB
HCM Control Delay, s	0.1	0.1	15.1	15.6
HCM LOS			C	C

Minor Lane/Major Mvmt	NBLn1	EBL	EBT	EBR	WBL	WBT	WBR	SBLn1
Capacity (veh/h)	414	1240	-	-	1247	-	-	405
HCM Lane V/C Ratio	0.142	0.002	-	-	0.004	-	-	0.158
HCM Control Delay (s)	15.1	7.9	0	-	7.9	0	-	15.6
HCM Lane LOS	C	A	A	-	A	A	-	C
HCM 95th %tile Q(veh)	0.5	0	-	-	0	-	-	0.6

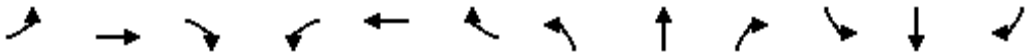

Movement	EBL	EBT	EBR	WBL	WBT	WBR	NBL	NBT	NBR	SBL	SBT	SBR
Lane Configurations												
Traffic Volume (veh/h)	68	118	98	68	144	96	118	635	63	83	776	47
Future Volume (veh/h)	68	118	98	68	144	96	118	635	63	83	776	47
Initial Q (Qb), veh	0	0	0	0	0	0	0	0	0	0	0	0
Ped-Bike Adj(A_pbT)	1.00		0.95	1.00		0.96	1.00		0.96	1.00		0.96
Parking Bus, Adj	1.00	1.00	1.00	1.00	1.00	1.00	1.00	1.00	1.00	1.00	1.00	1.00
Work Zone On Approach		No			No			No			No	
Adj Sat Flow, veh/h/ln	1870	1870	1870	1870	1870	1870	1870	1870	1870	1870	1870	1870
Adj Flow Rate, veh/h	74	128	107	86	182	122	123	661	66	90	843	51
Peak Hour Factor	0.92	0.92	0.92	0.79	0.79	0.79	0.96	0.96	0.96	0.92	0.92	0.92
Percent Heavy Veh, %	2	2	2	2	2	2	2	2	2	2	2	2
Cap, veh/h	94	281	227	108	296	239	149	1746	174	113	1756	106
Arrive On Green	0.05	0.15	0.15	0.06	0.16	0.16	0.08	0.54	0.54	0.06	0.52	0.52
Sat Flow, veh/h	1781	1870	1512	1781	1870	1515	1781	3250	324	1781	3396	205
Grp Volume(v), veh/h	74	128	107	86	182	122	123	361	366	90	441	453
Grp Sat Flow(s),veh/h/ln	1781	1870	1512	1781	1870	1515	1781	1777	1798	1781	1777	1824
Q Serve(g_s), s	4.9	7.5	7.8	5.7	10.9	8.8	8.2	14.2	14.2	6.0	19.1	19.1
Cycle Q Clear(g_c), s	4.9	7.5	7.8	5.7	10.9	8.8	8.2	14.2	14.2	6.0	19.1	19.1
Prop In Lane	1.00		1.00	1.00		1.00	1.00		0.18	1.00		0.11
Lane Grp Cap(c), veh/h	94	281	227	108	296	239	149	955	966	113	919	943
V/C Ratio(X)	0.78	0.46	0.47	0.79	0.62	0.51	0.83	0.38	0.38	0.80	0.48	0.48
Avail Cap(c_a), veh/h	154	500	405	169	516	418	214	955	966	181	919	943
HCM Platoon Ratio	1.00	1.00	1.00	1.00	1.00	1.00	1.00	1.00	1.00	1.00	1.00	1.00
Upstream Filter(I)	1.00	1.00	1.00	0.82	0.82	0.82	0.91	0.91	0.91	1.00	1.00	1.00
Uniform Delay (d), s/veh	56.1	46.5	46.6	55.6	47.1	46.3	54.1	16.1	16.1	55.4	18.6	18.6
Incr Delay (d2), s/veh	5.3	0.4	0.6	4.7	0.6	0.5	10.1	1.0	1.0	4.7	1.8	1.8
Initial Q Delay(d3),s/veh	0.0	0.0	0.0	0.0	0.0	0.0	0.0	0.0	0.0	0.0	0.0	0.0
%ile BackOfQ(50%),veh/ln	2.3	3.5	2.9	2.7	5.1	3.3	4.1	6.0	6.0	2.8	8.2	8.4
Unsig. Movement Delay, s/veh												
LnGrp Delay(d),s/veh	61.4	47.0	47.2	60.3	47.8	46.8	64.2	17.2	17.2	60.2	20.4	20.4
LnGrp LOS	E	D	D	E	D	D	E	B	B	E	C	C
Approach Vol, veh/h		309			390			850			984	
Approach Delay, s/veh		50.5			50.2			24.0			24.0	
Approach LOS		D			D			C			C	

Timer - Assigned Phs	1	2	3	4	5	6	7	8
Phs Duration (G+Y+Rc), s	13.2	70.2	12.9	23.7	15.6	67.7	12.0	24.7
Change Period (Y+Rc), s	5.6	5.7	5.6	5.7	5.6	5.7	5.6	5.7
Max Green Setting (Gmax), s	12.2	41.7	11.4	32.1	14.4	39.5	10.4	33.1
Max Q Clear Time (g_c+I1), s	8.0	16.2	7.7	9.8	10.2	21.1	6.9	12.9
Green Ext Time (p_c), s	0.0	3.1	0.0	0.6	0.1	3.7	0.0	0.8

Intersection Summary	
HCM 6th Ctrl Delay	31.3
HCM 6th LOS	C



Movement	EBL	EBT	EBR	WBL	WBT	WBR	NBL	NBT	NBR	SBL	SBT	SBR
Lane Configurations												
Traffic Volume (veh/h)	37	174	82	22	157	24	86	394	26	56	572	50
Future Volume (veh/h)	37	174	82	22	157	24	86	394	26	56	572	50
Initial Q (Qb), veh	0	0	0	0	0	0	0	0	0	0	0	0
Ped-Bike Adj(A_pbT)	1.00		0.97	0.99		0.97	1.00		0.96	1.00		0.95
Parking Bus, Adj	1.00	1.00	1.00	1.00	1.00	1.00	1.00	1.00	1.00	1.00	1.00	1.00
Work Zone On Approach		No			No			No			No	
Adj Sat Flow, veh/h/ln	1870	1870	1870	1870	1870	1870	1870	1870	1870	1870	1870	1870
Adj Flow Rate, veh/h	45	212	100	30	212	32	100	458	30	74	753	66
Peak Hour Factor	0.82	0.82	0.82	0.74	0.74	0.74	0.86	0.86	0.86	0.76	0.76	0.76
Percent Heavy Veh, %	2	2	2	2	2	2	2	2	2	2	2	2
Cap, veh/h	157	449	212	91	326	46	131	1183	77	106	1106	97
Arrive On Green	0.09	0.38	0.38	0.23	0.23	0.23	0.07	0.35	0.35	0.06	0.34	0.34
Sat Flow, veh/h	1781	1190	561	106	1435	204	1781	3375	220	1781	3291	288
Grp Volume(v), veh/h	45	0	312	274	0	0	100	240	248	74	406	413
Grp Sat Flow(s),veh/h/ln	1781	0	1752	1744	0	0	1781	1777	1819	1781	1777	1802
Q Serve(g_s), s	1.4	0.0	8.0	2.6	0.0	0.0	3.3	6.1	6.1	2.4	11.7	11.7
Cycle Q Clear(g_c), s	1.4	0.0	8.0	8.4	0.0	0.0	3.3	6.1	6.1	2.4	11.7	11.7
Prop In Lane	1.00		0.32	0.11		0.12	1.00		0.12	1.00		0.16
Lane Grp Cap(c), veh/h	157	0	661	463	0	0	131	623	637	106	597	606
V/C Ratio(X)	0.29	0.00	0.47	0.59	0.00	0.00	0.76	0.39	0.39	0.70	0.68	0.68
Avail Cap(c_a), veh/h	338	0	1426	1028	0	0	427	1416	1449	338	1327	1346
HCM Platoon Ratio	1.00	1.00	1.00	1.00	1.00	1.00	1.00	1.00	1.00	1.00	1.00	1.00
Upstream Filter(I)	1.00	0.00	1.00	1.00	0.00	0.00	1.00	1.00	1.00	1.00	1.00	1.00
Uniform Delay (d), s/veh	25.4	0.0	14.1	21.0	0.0	0.0	27.1	14.5	14.6	27.5	17.0	17.0
Incr Delay (d2), s/veh	1.0	0.0	0.5	1.2	0.0	0.0	8.8	0.4	0.4	8.2	1.4	1.4
Initial Q Delay(d3),s/veh	0.0	0.0	0.0	0.0	0.0	0.0	0.0	0.0	0.0	0.0	0.0	0.0
%ile BackOfQ(50%),veh/ln	0.6	0.0	2.8	3.3	0.0	0.0	1.6	2.3	2.3	1.2	4.5	4.6
Unsig. Movement Delay, s/veh												
LnGrp Delay(d),s/veh	26.4	0.0	14.6	22.2	0.0	0.0	35.9	14.9	14.9	35.7	18.4	18.4
LnGrp LOS	C	A	B	C	A	A	D	B	B	D	B	B
Approach Vol, veh/h		357			274			588			893	
Approach Delay, s/veh		16.1			22.2			18.5			19.8	
Approach LOS		B			C			B			B	

Timer - Assigned Phs	1	2		4	5	6	7	8
Phs Duration (G+Y+Rc), s	7.2	25.4		27.0	8.1	24.5	9.0	18.0
Change Period (Y+Rc), s	3.7	4.5		4.5	3.7	4.5	3.7	4.5
Max Green Setting (Gmax), s	11.3	47.5		48.5	14.3	44.5	11.3	33.5
Max Q Clear Time (g_c+I1), s	10.4	8.1		10.0	5.3	13.7	3.4	10.4
Green Ext Time (p_c), s	0.1	3.2		2.0	0.1	5.9	0.0	1.6

Intersection Summary	
HCM 6th Ctrl Delay	19.1
HCM 6th LOS	B



Movement	EBL	EBT	EBR	WBL	WBT	WBR	NBL	NBT	NBR	SBL	SBT	SBR
Lane Configurations												
Traffic Volume (veh/h)	36	130	70	128	122	170	32	610	84	96	745	29
Future Volume (veh/h)	36	130	70	128	122	170	32	610	84	96	745	29
Initial Q (Qb), veh	0	0	0	0	0	0	0	0	0	0	0	0
Ped-Bike Adj(A_pbT)	1.00		0.96	1.00		0.96	1.00		0.95	1.00		0.96
Parking Bus, Adj	1.00	1.00	1.00	1.00	1.00	1.00	1.00	1.00	1.00	1.00	1.00	1.00
Work Zone On Approach		No			No			No			No	
Adj Sat Flow, veh/h/ln	1870	1870	1870	1870	1870	1870	1870	1870	1870	1870	1870	1870
Adj Flow Rate, veh/h	39	140	75	133	127	177	41	772	106	109	847	33
Peak Hour Factor	0.93	0.93	0.93	0.96	0.96	0.96	0.79	0.79	0.79	0.88	0.88	0.88
Percent Heavy Veh, %	2	2	2	2	2	2	2	2	2	2	2	2
Cap, veh/h	52	185	99	182	173	297	69	1012	139	135	1258	49
Arrive On Green	0.19	0.19	0.19	0.19	0.19	0.19	0.04	0.32	0.32	0.08	0.36	0.36
Sat Flow, veh/h	267	959	514	933	891	1524	1781	3118	428	1781	3480	136
Grp Volume(v), veh/h	254	0	0	260	0	177	41	440	438	109	432	448
Grp Sat Flow(s),veh/h/ln	1740	0	0	1824	0	1524	1781	1777	1769	1781	1777	1839
Q Serve(g_s), s	15.1	0.0	0.0	14.7	0.0	11.6	2.5	24.4	24.4	6.6	22.6	22.6
Cycle Q Clear(g_c), s	15.1	0.0	0.0	14.7	0.0	11.6	2.5	24.4	24.4	6.6	22.6	22.6
Prop In Lane	0.15		0.30	0.51		1.00	1.00		0.24	1.00		0.07
Lane Grp Cap(c), veh/h	336	0	0	355	0	297	69	577	574	135	642	664
V/C Ratio(X)	0.76	0.00	0.00	0.73	0.00	0.60	0.59	0.76	0.76	0.81	0.67	0.67
Avail Cap(c_a), veh/h	586	0	0	615	0	514	99	670	667	183	754	780
HCM Platoon Ratio	1.00	1.00	1.00	1.00	1.00	1.00	1.00	1.00	1.00	1.00	1.00	1.00
Upstream Filter(I)	1.00	0.00	0.00	1.00	0.00	1.00	1.00	1.00	1.00	1.00	1.00	1.00
Uniform Delay (d), s/veh	41.9	0.0	0.0	41.5	0.0	40.3	51.9	33.3	33.3	49.9	29.6	29.6
Incr Delay (d2), s/veh	3.5	0.0	0.0	2.9	0.0	1.9	2.9	8.0	8.0	12.4	4.6	4.4
Initial Q Delay(d3),s/veh	0.0	0.0	0.0	0.0	0.0	0.0	0.0	0.0	0.0	0.0	0.0	0.0
%ile BackOfQ(50%),veh/ln	6.7	0.0	0.0	6.8	0.0	4.5	1.1	11.4	11.3	3.3	10.0	10.4
Unsig. Movement Delay, s/veh												
LnGrp Delay(d),s/veh	45.4	0.0	0.0	44.5	0.0	42.2	54.8	41.3	41.3	62.3	34.2	34.0
LnGrp LOS	D	A	A	D	A	D	D	D	D	E	C	C
Approach Vol, veh/h		254			437			919			989	
Approach Delay, s/veh		45.4			43.6			41.9			37.2	
Approach LOS		D			D			D			D	

Timer - Assigned Phs	1	2		4	5	6		8
Phs Duration (G+Y+Rc), s	10.0	45.1		27.5	14.0	41.0		27.3
Change Period (Y+Rc), s	* 5.7	5.4		6.1	* 5.7	5.4		6.1
Max Green Setting (Gmax), s	* 6.1	46.6		37.0	* 11	41.4		37.0
Max Q Clear Time (g_c+I1), s	4.5	24.6		16.7	8.6	26.4		17.1
Green Ext Time (p_c), s	0.0	12.0		2.0	0.0	9.2		1.4

Intersection Summary	
HCM 6th Ctrl Delay	40.7
HCM 6th LOS	D

Notes

* HCM 6th computational engine requires equal clearance times for the phases crossing the barrier.



Movement	EBL	EBT	EBR	WBL	WBT	WBR	NBL	NBT	NBR	SBL	SBT	SBR
Lane Configurations												
Traffic Volume (veh/h)	52	102	171	61	142	63	119	486	33	43	478	51
Future Volume (veh/h)	52	102	171	61	142	63	119	486	33	43	478	51
Initial Q (Qb), veh	0	0	0	0	0	0	0	0	0	0	0	0
Ped-Bike Adj(A_pbT)	1.00		0.92	1.00		0.95	1.00		0.96	1.00		0.95
Parking Bus, Adj	1.00	1.00	1.00	1.00	1.00	1.00	1.00	1.00	1.00	1.00	1.00	1.00
Work Zone On Approach		No			No			No			No	
Adj Sat Flow, veh/h/ln	1870	1870	1870	1870	1870	1870	1870	1870	1870	1870	1870	1870
Adj Flow Rate, veh/h	57	112	166	97	225	100	132	540	37	47	520	55
Peak Hour Factor	0.91	0.91	0.91	0.63	0.63	0.63	0.90	0.90	0.90	0.92	0.92	0.92
Percent Heavy Veh, %	2	2	2	2	2	2	2	2	2	2	2	2
Cap, veh/h	81	160	190	105	243	108	160	611	42	63	560	452
Arrive On Green	0.13	0.13	0.13	0.26	0.26	0.26	0.09	0.35	0.35	0.04	0.30	0.30
Sat Flow, veh/h	620	1219	1451	402	932	414	1781	1724	118	1781	1870	1508
Grp Volume(v), veh/h	169	0	166	422	0	0	132	0	577	47	520	55
Grp Sat Flow(s),veh/h/ln	1839	0	1451	1748	0	0	1781	0	1843	1781	1870	1508
Q Serve(g_s), s	9.3	0.0	11.9	25.0	0.0	0.0	7.7	0.0	31.3	2.8	28.6	2.8
Cycle Q Clear(g_c), s	9.3	0.0	11.9	25.0	0.0	0.0	7.7	0.0	31.3	2.8	28.6	2.8
Prop In Lane	0.34		1.00	0.23		0.24	1.00		0.06	1.00		1.00
Lane Grp Cap(c), veh/h	241	0	190	456	0	0	160	0	653	63	560	452
V/C Ratio(X)	0.70	0.00	0.87	0.93	0.00	0.00	0.82	0.00	0.88	0.75	0.93	0.12
Avail Cap(c_a), veh/h	244	0	193	512	0	0	242	0	795	97	655	528
HCM Platoon Ratio	1.00	1.00	1.00	1.00	1.00	1.00	1.00	1.00	1.00	1.00	1.00	1.00
Upstream Filter(I)	1.00	0.00	1.00	1.00	0.00	0.00	1.00	0.00	1.00	1.00	1.00	1.00
Uniform Delay (d), s/veh	44.1	0.0	45.2	38.3	0.0	0.0	47.5	0.0	32.2	50.7	36.1	27.0
Incr Delay (d2), s/veh	7.2	0.0	31.1	20.6	0.0	0.0	7.9	0.0	8.9	6.4	16.9	0.0
Initial Q Delay(d3),s/veh	0.0	0.0	0.0	0.0	0.0	0.0	0.0	0.0	0.0	0.0	0.0	0.0
%ile BackOfQ(50%),veh/ln	4.7	0.0	5.9	13.0	0.0	0.0	3.7	0.0	14.6	1.3	14.9	1.0
Unsig. Movement Delay, s/veh												
LnGrp Delay(d),s/veh	51.3	0.0	76.3	58.9	0.0	0.0	55.4	0.0	41.1	57.1	52.9	27.1
LnGrp LOS	D	A	E	E	A	A	E	A	D	E	D	C
Approach Vol, veh/h		335			422			709			622	
Approach Delay, s/veh		63.7			58.9			43.8			51.0	
Approach LOS		E			E			D			D	

Timer - Assigned Phs	1	2		4	5	6		8
Phs Duration (G+Y+Rc), s	9.3	43.4		19.8	15.2	37.6		33.6
Change Period (Y+Rc), s	5.6	5.8		5.9	5.6	5.8		5.9
Max Green Setting (Gmax), s	5.8	45.8		14.1	14.4	37.2		31.1
Max Q Clear Time (g_c+I1), s	4.8	33.3		13.9	9.7	30.6		27.0
Green Ext Time (p_c), s	0.0	1.8		0.0	0.0	1.2		0.7

Intersection Summary		
HCM 6th Ctrl Delay		52.2
HCM 6th LOS		D

Intersection	
Intersection Delay, s/veh	42.4
Intersection LOS	E

Movement	EBL	EBT	EBR	WBL	WBT	WBR	NBL	NBT	NBR	SBL	SBT	SBR
Lane Configurations												
Traffic Vol, veh/h	40	115	77	42	105	48	56	403	38	99	513	57
Future Vol, veh/h	40	115	77	42	105	48	56	403	38	99	513	57
Peak Hour Factor	0.81	0.81	0.81	0.89	0.89	0.89	0.86	0.86	0.86	0.73	0.73	0.73
Heavy Vehicles, %	2	2	2	2	2	2	2	2	2	2	2	2
Mvmt Flow	49	142	95	47	118	54	65	469	44	136	703	78
Number of Lanes	0	1	0	0	1	0	1	2	0	1	2	0

Approach	EB	WB	NB	SB
Opposing Approach	WB	EB	SB	NB
Opposing Lanes	1	1	3	3
Conflicting Approach Left	SB	NB	EB	WB
Conflicting Lanes Left	3	3	1	1
Conflicting Approach Right	NB	SB	WB	EB
Conflicting Lanes Right	3	3	1	1
HCM Control Delay	31.6	23.9	25.8	60.6
HCM LOS	D	C	D	F

Lane	NBLn1	NBLn2	NBLn3	EBLn1	WBLn1	SBLn1	SBLn2	SBLn3
Vol Left, %	100%	0%	0%	17%	22%	100%	0%	0%
Vol Thru, %	0%	100%	78%	50%	54%	0%	100%	75%
Vol Right, %	0%	0%	22%	33%	25%	0%	0%	25%
Sign Control	Stop	Stop	Stop	Stop	Stop	Stop	Stop	Stop
Traffic Vol by Lane	56	269	172	232	195	99	342	228
LT Vol	56	0	0	40	42	99	0	0
Through Vol	0	269	134	115	105	0	342	171
RT Vol	0	0	38	77	48	0	0	57
Lane Flow Rate	65	312	200	286	219	136	468	312
Geometry Grp	7	7	7	7	7	7	7	7
Degree of Util (X)	0.164	0.743	0.465	0.711	0.563	0.332	1.08	0.704
Departure Headway (Hd)	9.321	8.796	8.634	9.205	9.557	8.824	8.3	8.117
Convergence, Y/N	Yes	Yes	Yes	Yes	Yes	Yes	Yes	Yes
Cap	387	415	421	395	379	408	436	447
Service Time	7.021	6.496	6.334	6.905	7.257	6.577	6.053	5.869
HCM Lane V/C Ratio	0.168	0.752	0.475	0.724	0.578	0.333	1.073	0.698
HCM Control Delay	13.8	32.9	18.6	31.6	23.9	15.9	95.3	28.1
HCM Lane LOS	B	D	C	D	C	C	F	D
HCM 95th-tile Q	0.6	6	2.4	5.4	3.3	1.4	15.5	5.4



Movement	EBL	EBT	EBR	WBL	WBT	WBR	NBL	NBT	NBR	SBL	SBT	SBR
Lane Configurations												
Traffic Volume (veh/h)	73	48	185	56	27	16	70	620	34	17	749	52
Future Volume (veh/h)	73	48	185	56	27	16	70	620	34	17	749	52
Initial Q (Qb), veh	0	0	0	0	0	0	0	0	0	0	0	0
Ped-Bike Adj(A_pbT)	1.00		0.96	1.00		0.95	1.00		0.96	1.00		0.96
Parking Bus, Adj	1.00	1.00	1.00	1.00	1.00	1.00	1.00	1.00	1.00	1.00	1.00	1.00
Work Zone On Approach		No			No			No			No	
Adj Sat Flow, veh/h/ln	1870	1870	1870	1870	1870	1870	1870	1870	1870	1870	1870	1870
Adj Flow Rate, veh/h	94	62	237	74	36	21	72	639	35	18	814	57
Peak Hour Factor	0.78	0.78	0.78	0.76	0.76	0.76	0.97	0.97	0.97	0.92	0.92	0.92
Percent Heavy Veh, %	2	2	2	2	2	2	2	2	2	2	2	2
Cap, veh/h	204	134	283	135	66	38	122	1402	77	58	1258	88
Arrive On Green	0.19	0.19	0.19	0.14	0.14	0.14	0.07	0.41	0.41	0.03	0.37	0.37
Sat Flow, veh/h	1094	722	1523	990	482	281	1781	3417	187	1781	3357	235
Grp Volume(v), veh/h	156	0	237	131	0	0	72	332	342	18	431	440
Grp Sat Flow(s),veh/h/ln	1816	0	1523	1753	0	0	1781	1777	1827	1781	1777	1816
Q Serve(g_s), s	6.4	0.0	12.5	5.8	0.0	0.0	3.3	11.3	11.3	0.8	16.6	16.6
Cycle Q Clear(g_c), s	6.4	0.0	12.5	5.8	0.0	0.0	3.3	11.3	11.3	0.8	16.6	16.6
Prop In Lane	0.60		1.00	0.56		0.16	1.00		0.10	1.00		0.13
Lane Grp Cap(c), veh/h	338	0	283	239	0	0	122	729	750	58	666	680
V/C Ratio(X)	0.46	0.00	0.84	0.55	0.00	0.00	0.59	0.46	0.46	0.31	0.65	0.65
Avail Cap(c_a), veh/h	465	0	390	554	0	0	225	953	980	178	906	926
HCM Platoon Ratio	1.00	1.00	1.00	1.00	1.00	1.00	1.00	1.00	1.00	1.00	1.00	1.00
Upstream Filter(I)	1.00	0.00	1.00	1.00	0.00	0.00	1.00	1.00	1.00	1.00	1.00	1.00
Uniform Delay (d), s/veh	30.1	0.0	32.6	33.5	0.0	0.0	37.6	17.8	17.8	39.3	21.5	21.5
Incr Delay (d2), s/veh	1.0	0.0	10.9	1.9	0.0	0.0	1.7	1.6	1.6	1.1	3.8	3.7
Initial Q Delay(d3),s/veh	0.0	0.0	0.0	0.0	0.0	0.0	0.0	0.0	0.0	0.0	0.0	0.0
%ile BackOfQ(50%),veh/ln	2.8	0.0	5.3	2.5	0.0	0.0	1.4	4.5	4.7	0.4	7.0	7.2
Unsig. Movement Delay, s/veh												
LnGrp Delay(d),s/veh	31.1	0.0	43.5	35.5	0.0	0.0	39.3	19.4	19.4	40.4	25.3	25.2
LnGrp LOS	C	A	D	D	A	A	D	B	B	D	C	C
Approach Vol, veh/h		393			131			746			889	
Approach Delay, s/veh		38.6			35.5			21.3			25.5	
Approach LOS		D			D			C			C	

Timer - Assigned Phs	1	2		4	5	6		8
Phs Duration (G+Y+Rc), s	10.4	36.6		16.0	7.4	39.5		20.2
Change Period (Y+Rc), s	* 4.7	5.4		* 4.7	* 4.7	5.4		4.7
Max Green Setting (Gmax), s	* 11	42.4		* 26	* 8.3	44.6		21.3
Max Q Clear Time (g_c+I1), s	15.3	18.6		7.8	2.8	13.3		14.5
Green Ext Time (p_c), s	0.0	12.5		0.6	0.0	10.9		1.0

Intersection Summary	
HCM 6th Ctrl Delay	27.1
HCM 6th LOS	C

Notes

* HCM 6th computational engine requires equal clearance times for the phases crossing the barrier.



Movement	EBL	EBT	EBR	WBL	WBT	WBR	NBL	NBT	NBR	SBL	SBT	SBR
Lane Configurations												
Traffic Volume (veh/h)	96	56	230	73	61	51	186	504	39	56	702	87
Future Volume (veh/h)	96	56	230	73	61	51	186	504	39	56	702	87
Initial Q (Qb), veh	0	0	0	0	0	0	0	0	0	0	0	0
Ped-Bike Adj(A_pbT)	1.00		0.97	0.99		0.96	1.00		0.96	1.00		0.97
Parking Bus, Adj	1.00	1.00	1.00	1.00	1.00	1.00	1.00	1.00	1.00	1.00	1.00	1.00
Work Zone On Approach		No			No			No			No	
Adj Sat Flow, veh/h/ln	1870	1870	1870	1870	1870	1870	1870	1870	1870	1870	1870	1870
Adj Flow Rate, veh/h	107	62	256	85	71	59	200	542	42	60	747	93
Peak Hour Factor	0.90	0.90	0.90	0.86	0.86	0.86	0.93	0.93	0.93	0.94	0.94	0.94
Percent Heavy Veh, %	2	2	2	2	2	2	2	2	2	2	2	2
Cap, veh/h	136	664	547	156	124	84	240	1335	103	78	982	122
Arrive On Green	0.08	0.35	0.35	0.21	0.21	0.21	0.13	0.40	0.40	0.04	0.31	0.31
Sat Flow, veh/h	1781	1870	1543	459	576	391	1781	3330	257	1781	3168	394
Grp Volume(v), veh/h	107	62	256	215	0	0	200	288	296	60	419	421
Grp Sat Flow(s),veh/h/ln	1781	1870	1543	1426	0	0	1781	1777	1811	1781	1777	1786
Q Serve(g_s), s	5.2	1.9	11.2	9.0	0.0	0.0	9.6	10.1	10.2	2.9	18.6	18.6
Cycle Q Clear(g_c), s	5.2	1.9	11.2	11.8	0.0	0.0	9.6	10.1	10.2	2.9	18.6	18.6
Prop In Lane	1.00		1.00	0.40		0.27	1.00		0.14	1.00		0.22
Lane Grp Cap(c), veh/h	136	664	547	363	0	0	240	712	726	78	551	554
V/C Ratio(X)	0.79	0.09	0.47	0.59	0.00	0.00	0.83	0.40	0.41	0.77	0.76	0.76
Avail Cap(c_a), veh/h	214	1052	868	587	0	0	375	893	910	194	712	716
HCM Platoon Ratio	1.00	1.00	1.00	1.00	1.00	1.00	1.00	1.00	1.00	1.00	1.00	1.00
Upstream Filter(I)	1.00	1.00	1.00	1.00	0.00	0.00	1.00	1.00	1.00	1.00	1.00	1.00
Uniform Delay (d), s/veh	39.6	18.8	21.8	31.3	0.0	0.0	36.8	18.7	18.7	41.3	27.2	27.2
Incr Delay (d2), s/veh	3.8	0.0	0.2	0.6	0.0	0.0	9.0	0.5	0.5	5.8	4.3	4.3
Initial Q Delay(d3),s/veh	0.0	0.0	0.0	0.0	0.0	0.0	0.0	0.0	0.0	0.0	0.0	0.0
%ile BackOfQ(50%),veh/ln	2.4	0.8	3.9	4.1	0.0	0.0	4.7	4.1	4.2	1.4	8.2	8.3
Unsig. Movement Delay, s/veh												
LnGrp Delay(d),s/veh	43.4	18.8	22.0	31.9	0.0	0.0	45.8	19.2	19.2	47.1	31.5	31.5
LnGrp LOS	D	B	C	C	A	A	D	B	B	D	C	C
Approach Vol, veh/h		425			215			784			900	
Approach Delay, s/veh		26.9			31.9			26.0			32.5	
Approach LOS		C			C			C			C	

Timer - Assigned Phs	1	2		4	5	6	7	8
Phs Duration (G+Y+Rc), s	9.4	40.7		37.2	17.4	32.8	12.3	24.9
Change Period (Y+Rc), s	5.6	5.7		6.2	5.6	5.7	5.6	6.2
Max Green Setting (Gmax), s	9.5	43.9		49.1	18.4	35.0	10.5	33.0
Max Q Clear Time (g_c+I1), s	4.9	12.2		13.2	11.6	20.6	7.2	13.8
Green Ext Time (p_c), s	0.0	5.7		0.7	0.3	6.2	0.0	0.9

Intersection Summary	
HCM 6th Ctrl Delay	29.2
HCM 6th LOS	C



Movement	EBL	EBT	EBR	WBL	WBT	WBR	NBL	NBT	NBR	SBL	SBT	SBR
Lane Configurations												
Traffic Volume (veh/h)	0	0	0	204	2	262	195	735	0	0	1007	95
Future Volume (veh/h)	0	0	0	204	2	262	195	735	0	0	1007	95
Initial Q (Qb), veh				0	0	0	0	0	0	0	0	0
Ped-Bike Adj(A_pbT)				1.00		0.97	1.00		1.00	1.00		0.96
Parking Bus, Adj				1.00	1.00	1.00	1.00	1.00	1.00	1.00	1.00	1.00
Work Zone On Approach					No			No			No	
Adj Sat Flow, veh/h/ln				1870	1870	1870	1870	1870	0	0	1870	1870
Adj Flow Rate, veh/h				219	2	282	264	993	0	0	1144	108
Peak Hour Factor				0.93	0.93	0.93	0.74	0.74	0.74	0.88	0.88	0.88
Percent Heavy Veh, %				2	2	2	2	2	0	0	2	2
Cap, veh/h				417	4	362	298	2334	0	0	1444	136
Arrive On Green				0.24	0.24	0.24	0.17	0.66	0.00	0.00	0.44	0.44
Sat Flow, veh/h				1766	16	1532	1781	3647	0	0	3362	308
Grp Volume(v), veh/h				221	0	282	264	993	0	0	621	631
Grp Sat Flow(s),veh/h/ln				1782	0	1532	1781	1777	0	0	1777	1800
Q Serve(g_s), s				10.6	0.0	16.9	14.2	13.1	0.0	0.0	29.4	29.6
Cycle Q Clear(g_c), s				10.6	0.0	16.9	14.2	13.1	0.0	0.0	29.4	29.6
Prop In Lane				0.99		1.00	1.00		0.00	0.00		0.17
Lane Grp Cap(c), veh/h				421	0	362	298	2334	0	0	785	795
V/C Ratio(X)				0.52	0.00	0.78	0.89	0.43	0.00	0.00	0.79	0.79
Avail Cap(c_a), veh/h				673	0	579	390	2621	0	0	836	847
HCM Platoon Ratio				1.00	1.00	1.00	1.00	1.00	1.00	1.00	1.00	1.00
Upstream Filter(I)				1.00	0.00	1.00	1.00	1.00	0.00	0.00	1.00	1.00
Uniform Delay (d), s/veh				32.7	0.0	35.1	40.0	8.0	0.0	0.0	23.5	23.6
Incr Delay (d2), s/veh				1.0	0.0	3.7	14.9	0.4	0.0	0.0	7.2	7.2
Initial Q Delay(d3),s/veh				0.0	0.0	0.0	0.0	0.0	0.0	0.0	0.0	0.0
%ile BackOfQ(50%),veh/ln				4.6	0.0	6.6	7.2	4.3	0.0	0.0	12.9	13.2
Unsig. Movement Delay, s/veh												
LnGrp Delay(d),s/veh				33.7	0.0	38.7	54.9	8.5	0.0	0.0	30.7	30.8
LnGrp LOS				C	A	D	D	A	A	A	C	C
Approach Vol, veh/h					503			1257			1252	
Approach Delay, s/veh					36.5			18.2			30.7	
Approach LOS					D			B			C	

Timer - Assigned Phs	1	2		4		6						
Phs Duration (G+Y+Rc), s	21.1	48.8		28.3		69.9						
Change Period (Y+Rc), s	4.7	5.4		5.1		5.4						
Max Green Setting (Gmax), s	23.3	46.2		37.1		72.4						
Max Q Clear Time (g_c+I1), s	16.2	31.6		18.9		15.1						
Green Ext Time (p_c), s	0.2	11.8		2.2		24.0						

Intersection Summary	
HCM 6th Ctrl Delay	26.5
HCM 6th LOS	C

Notes

* HCM 6th computational engine requires equal clearance times for the phases crossing the barrier.



Movement	EBL	EBT	EBR	WBL	WBT	WBR	NBL	NBT	NBR	SBL	SBT	SBR
Lane Configurations												
Traffic Volume (veh/h)	69	3	259	0	0	0	0	860	296	372	839	0
Future Volume (veh/h)	69	3	259	0	0	0	0	860	296	372	839	0
Initial Q (Qb), veh	0	0	0				0	0	0	0	0	0
Ped-Bike Adj(A_pbT)	1.00		0.97				1.00		0.96	1.00		1.00
Parking Bus, Adj	1.00	1.00	1.00				1.00	1.00	1.00	1.00	1.00	1.00
Work Zone On Approach		No						No			No	
Adj Sat Flow, veh/h/ln	1870	1870	1870				0	1870	1870	1870	1870	0
Adj Flow Rate, veh/h	85	4	320				0	1075	370	448	1011	0
Peak Hour Factor	0.81	0.81	0.81				0.80	0.80	0.80	0.83	0.83	0.83
Percent Heavy Veh, %	2	2	2				0	2	2	2	2	0
Cap, veh/h	82	4	308				0	1222	521	479	2329	0
Arrive On Green	0.25	0.25	0.25				0.00	0.34	0.34	0.27	0.66	0.00
Sat Flow, veh/h	329	15	1238				0	3647	1514	1781	3647	0
Grp Volume(v), veh/h	409	0	0				0	1075	370	448	1011	0
Grp Sat Flow(s),veh/h/ln	1582	0	0				0	1777	1514	1781	1777	0
Q Serve(g_s), s	27.3	0.0	0.0				0.0	31.2	23.3	27.0	15.0	0.0
Cycle Q Clear(g_c), s	27.3	0.0	0.0				0.0	31.2	23.3	27.0	15.0	0.0
Prop In Lane	0.21		0.78				0.00		1.00	1.00		0.00
Lane Grp Cap(c), veh/h	394	0	0				0	1222	521	479	2329	0
V/C Ratio(X)	1.04	0.00	0.00				0.00	0.88	0.71	0.94	0.43	0.00
Avail Cap(c_a), veh/h	394	0	0				0	1237	527	638	2663	0
HCM Platoon Ratio	1.00	1.00	1.00				1.00	1.00	1.00	1.00	1.00	1.00
Upstream Filter(I)	1.00	0.00	0.00				0.00	1.00	1.00	1.00	1.00	0.00
Uniform Delay (d), s/veh	41.2	0.0	0.0				0.0	33.9	31.3	39.2	9.1	0.0
Incr Delay (d2), s/veh	55.8	0.0	0.0				0.0	8.8	7.0	15.9	0.5	0.0
Initial Q Delay(d3),s/veh	0.0	0.0	0.0				0.0	0.0	0.0	0.0	0.0	0.0
%ile BackOfQ(50%),veh/ln	16.6	0.0	0.0				0.0	14.3	9.2	13.5	5.2	0.0
Unsig. Movement Delay, s/veh												
LnGrp Delay(d),s/veh	97.0	0.0	0.0				0.0	42.6	38.3	55.1	9.6	0.0
LnGrp LOS	F	A	A				A	D	D	E	A	A
Approach Vol, veh/h		409						1445			1459	
Approach Delay, s/veh		97.0						41.5			23.6	
Approach LOS		F						D			C	

Timer - Assigned Phs		2			5	6		8				
Phs Duration (G+Y+Rc), s		77.3			34.2	43.1		32.4				
Change Period (Y+Rc), s		5.4			* 4.7	5.4		5.1				
Max Green Setting (Gmax), s		82.2			* 39	38.2		27.3				
Max Q Clear Time (g_c+I1), s		17.0			29.0	33.2		29.3				
Green Ext Time (p_c), s		25.8			0.5	4.5		0.0				

Intersection Summary												
HCM 6th Ctrl Delay			40.5									
HCM 6th LOS			D									

Notes

* HCM 6th computational engine requires equal clearance times for the phases crossing the barrier.



Movement	EBL	EBT	EBR	WBL	WBT	WBR	NBL	NBT	NBR	SBL	SBT	SBR
Lane Configurations												
Traffic Volume (veh/h)	0	0	0	153	6	58	0	574	303	0	709	67
Future Volume (veh/h)	0	0	0	153	6	58	0	574	303	0	709	67
Initial Q (Qb), veh				0	0	0	0	0	0	0	0	0
Ped-Bike Adj(A_pbT)				1.00		0.96	1.00		0.96	1.00		0.96
Parking Bus, Adj				1.00	1.00	1.00	1.00	1.00	1.00	1.00	1.00	1.00
Work Zone On Approach					No			No			No	
Adj Sat Flow, veh/h/ln				1870	1870	1870	0	1870	1870	0	1870	1870
Adj Flow Rate, veh/h				191	8	72	0	617	326	0	844	80
Peak Hour Factor				0.80	0.80	0.80	0.93	0.93	0.93	0.84	0.84	0.84
Percent Heavy Veh, %				2	2	2	0	2	2	0	2	2
Cap, veh/h				375	16	335	0	1550	664	0	2061	194
Arrive On Green				0.22	0.22	0.22	0.00	0.44	0.44	0.00	0.44	0.44
Sat Flow, veh/h				1713	72	1529	0	3647	1522	0	4895	446
Grp Volume(v), veh/h				199	0	72	0	617	326	0	607	317
Grp Sat Flow(s),veh/h/ln				1785	0	1529	0	1777	1522	0	1702	1768
Q Serve(g_s), s				3.6	0.0	1.4	0.0	4.3	5.6	0.0	4.4	4.5
Cycle Q Clear(g_c), s				3.6	0.0	1.4	0.0	4.3	5.6	0.0	4.4	4.5
Prop In Lane				0.96		1.00	0.00		1.00	0.00		0.25
Lane Grp Cap(c), veh/h				391	0	335	0	1550	664	0	1484	771
V/C Ratio(X)				0.51	0.00	0.22	0.00	0.40	0.49	0.00	0.41	0.41
Avail Cap(c_a), veh/h				2310	0	1979	0	5943	2546	0	5693	2957
HCM Platoon Ratio				1.00	1.00	1.00	1.00	1.00	1.00	1.00	1.00	1.00
Upstream Filter(I)				1.00	0.00	1.00	0.00	1.00	1.00	0.00	1.00	1.00
Uniform Delay (d), s/veh				12.4	0.0	11.6	0.0	7.0	7.3	0.0	7.0	7.0
Incr Delay (d2), s/veh				1.0	0.0	0.3	0.0	0.2	0.6	0.0	0.2	0.4
Initial Q Delay(d3),s/veh				0.0	0.0	0.0	0.0	0.0	0.0	0.0	0.0	0.0
%ile BackOfQ(50%),veh/ln				1.2	0.0	0.4	0.0	0.9	1.1	0.0	0.9	1.0
Unsig. Movement Delay, s/veh												
LnGrp Delay(d),s/veh				13.5	0.0	11.9	0.0	7.1	7.9	0.0	7.2	7.4
LnGrp LOS				B	A	B	A	A	A	A	A	A
Approach Vol, veh/h					271			943			924	
Approach Delay, s/veh					13.1			7.4			7.3	
Approach LOS					B			A			A	

Timer - Assigned Phs	2		6		8			
Phs Duration (G+Y+Rc), s	22.2		22.2		14.0			
Change Period (Y+Rc), s	6.4		6.4		6.1			
Max Green Setting (Gmax), s	60.6		60.6		46.9			
Max Q Clear Time (g_c+I1), s	7.6		6.5		5.6			
Green Ext Time (p_c), s	5.9		6.9		1.5			

Intersection Summary		
HCM 6th Ctrl Delay	8.1	
HCM 6th LOS	A	



Movement	EBL	EBT	EBR	WBL	WBT	WBR	NBL	NBT	NBR	SBL	SBT	SBR
Lane Configurations												
Traffic Volume (veh/h)	47	2	378	0	0	0	0	830	208	117	744	0
Future Volume (veh/h)	47	2	378	0	0	0	0	830	208	117	744	0
Initial Q (Qb), veh	0	0	0				0	0	0	0	0	0
Ped-Bike Adj(A_pbT)	1.00		0.95				1.00		0.96	1.00		1.00
Parking Bus, Adj	1.00	1.00	1.00				1.00	1.00	1.00	1.00	1.00	1.00
Work Zone On Approach		No						No			No	
Adj Sat Flow, veh/h/ln	1870	1870	1870				0	1870	1870	1870	1870	0
Adj Flow Rate, veh/h	55	2	440				0	874	219	130	827	0
Peak Hour Factor	0.86	0.86	0.86				0.95	0.95	0.95	0.90	0.90	0.90
Percent Heavy Veh, %	2	2	2				0	2	2	2	2	0
Cap, veh/h	423	15	647				0	1309	559	171	1972	0
Arrive On Green	0.25	0.25	0.25				0.00	0.37	0.37	0.10	0.56	0.00
Sat Flow, veh/h	1722	63	2637				0	3647	1517	1781	3647	0
Grp Volume(v), veh/h	57	0	440				0	874	219	130	827	0
Grp Sat Flow(s),veh/h/ln	1784	0	1318				0	1777	1517	1781	1777	0
Q Serve(g_s), s	1.6	0.0	9.5				0.0	12.9	6.7	4.5	8.5	0.0
Cycle Q Clear(g_c), s	1.6	0.0	9.5				0.0	12.9	6.7	4.5	8.5	0.0
Prop In Lane	0.96		1.00				0.00		1.00	1.00		0.00
Lane Grp Cap(c), veh/h	438	0	647				0	1309	559	171	1972	0
V/C Ratio(X)	0.13	0.00	0.68				0.00	0.67	0.39	0.76	0.42	0.00
Avail Cap(c_a), veh/h	1022	0	1511				0	2643	1128	549	4061	0
HCM Platoon Ratio	1.00	1.00	1.00				1.00	1.00	1.00	1.00	1.00	1.00
Upstream Filter(I)	1.00	0.00	1.00				0.00	1.00	1.00	1.00	1.00	0.00
Uniform Delay (d), s/veh	18.4	0.0	21.4				0.0	16.6	14.6	27.6	8.1	0.0
Incr Delay (d2), s/veh	0.1	0.0	1.3				0.0	0.6	0.4	6.9	0.1	0.0
Initial Q Delay(d3),s/veh	0.0	0.0	0.0				0.0	0.0	0.0	0.0	0.0	0.0
%ile BackOfQ(50%),veh/ln	0.6	0.0	2.8				0.0	4.5	2.0	2.1	2.4	0.0
Unsig. Movement Delay, s/veh												
LnGrp Delay(d),s/veh	18.6	0.0	22.7				0.0	17.2	15.1	34.5	8.2	0.0
LnGrp LOS	B	A	C				A	B	B	C	A	A
Approach Vol, veh/h		497						1093			957	
Approach Delay, s/veh		22.2						16.8			11.8	
Approach LOS		C						B			B	

Timer - Assigned Phs	1	2	4	6
Phs Duration (G+Y+Rc), s	11.7	29.5	21.5	41.2
Change Period (Y+Rc), s	* 5.7	6.4	6.1	6.4
Max Green Setting (Gmax), s	* 13	46.6	35.9	71.6
Max Q Clear Time (g_c+I1), s	10.5	14.9	11.5	10.5
Green Ext Time (p_c), s	0.2	7.6	2.3	6.5

Intersection Summary	
HCM 6th Ctrl Delay	16.0
HCM 6th LOS	B

Notes

* HCM 6th computational engine requires equal clearance times for the phases crossing the barrier.



Movement	EBL	EBT	EBR	WBL	WBT	WBR	NBL	NBT	NBR	SBL	SBT	SBR
Lane Configurations												
Traffic Volume (veh/h)	40	71	31	3	105	77	27	41	3	105	110	34
Future Volume (veh/h)	40	71	31	3	105	77	27	41	3	105	110	34
Initial Q (Qb), veh	0	0	0	0	0	0	0	0	0	0	0	0
Ped-Bike Adj(A_pbT)	1.00		0.96	1.00		0.95	1.00		0.98	1.00		0.96
Parking Bus, Adj	1.00	1.00	1.00	1.00	1.00	1.00	1.00	1.00	1.00	1.00	1.00	1.00
Work Zone On Approach		No			No			No			No	
Adj Sat Flow, veh/h/ln	1870	1870	1870	1870	1870	1870	1870	1870	1870	1870	1870	1870
Adj Flow Rate, veh/h	45	80	35	3	115	85	39	59	4	113	118	37
Peak Hour Factor	0.89	0.89	0.89	0.91	0.91	0.91	0.69	0.69	0.69	0.93	0.93	0.93
Percent Heavy Veh, %	2	2	2	2	2	2	2	2	2	2	2	2
Cap, veh/h	74	350	285	7	279	226	68	1594	694	145	1312	393
Arrive On Green	0.04	0.19	0.19	0.00	0.15	0.15	0.04	0.45	0.45	0.08	0.49	0.49
Sat Flow, veh/h	1781	1870	1523	1781	1870	1512	1781	3554	1548	1781	2668	799
Grp Volume(v), veh/h	45	80	35	3	115	85	39	59	4	113	77	78
Grp Sat Flow(s),veh/h/ln	1781	1870	1523	1781	1870	1512	1781	1777	1548	1781	1777	1690
Q Serve(g_s), s	1.7	2.5	1.3	0.1	3.9	3.5	1.5	0.6	0.1	4.3	1.6	1.7
Cycle Q Clear(g_c), s	1.7	2.5	1.3	0.1	3.9	3.5	1.5	0.6	0.1	4.3	1.6	1.7
Prop In Lane	1.00		1.00	1.00		1.00	1.00		1.00	1.00		0.47
Lane Grp Cap(c), veh/h	74	350	285	7	279	226	68	1594	694	145	874	831
V/C Ratio(X)	0.60	0.23	0.12	0.42	0.41	0.38	0.58	0.04	0.01	0.78	0.09	0.09
Avail Cap(c_a), veh/h	174	968	788	128	920	744	138	1594	694	266	874	831
HCM Platoon Ratio	1.00	1.00	1.00	1.00	1.00	1.00	1.00	1.00	1.00	1.00	1.00	1.00
Upstream Filter(I)	1.00	1.00	1.00	1.00	1.00	1.00	1.00	1.00	1.00	1.00	1.00	1.00
Uniform Delay (d), s/veh	32.7	24.0	23.5	34.5	26.8	26.7	32.9	10.7	10.6	31.3	9.4	9.4
Incr Delay (d2), s/veh	2.9	0.3	0.2	13.6	1.0	1.0	2.8	0.0	0.0	3.4	0.2	0.2
Initial Q Delay(d3),s/veh	0.0	0.0	0.0	0.0	0.0	0.0	0.0	0.0	0.0	0.0	0.0	0.0
%ile BackOfQ(50%),veh/ln	0.8	1.1	0.5	0.1	1.7	1.3	0.7	0.2	0.0	1.9	0.6	0.6
Unsig. Movement Delay, s/veh												
LnGrp Delay(d),s/veh	35.7	24.3	23.7	48.1	27.8	27.7	35.7	10.8	10.6	34.7	9.6	9.6
LnGrp LOS	D	C	C	D	C	C	D	B	B	C	A	A
Approach Vol, veh/h		160			203			102			268	
Approach Delay, s/veh		27.4			28.0			20.3			20.2	
Approach LOS		C			C			C			C	

Timer - Assigned Phs	1	2	3	4	5	6	7	8
Phs Duration (G+Y+Rc), s	7.2	39.3	7.5	15.5	10.3	36.3	4.9	18.1
Change Period (Y+Rc), s	4.6	5.1	4.6	5.1	4.6	5.1	4.6	5.1
Max Green Setting (Gmax), s	5.4	34.2	6.8	34.2	10.4	29.2	5.0	36.0
Max Q Clear Time (g_c+I1), s	3.5	3.7	3.7	5.9	6.3	2.6	2.1	4.5
Green Ext Time (p_c), s	0.0	1.3	0.0	0.9	0.0	0.4	0.0	0.5

Intersection Summary	
HCM 6th Ctrl Delay	24.0
HCM 6th LOS	C



Movement	EBL	EBT	EBR	WBL	WBT	WBR	NBL	NBT	NBR	SBL	SBT	SBR
Lane Configurations												
Traffic Volume (veh/h)	206	75	138	69	68	314	141	480	56	404	507	153
Future Volume (veh/h)	206	75	138	69	68	314	141	480	56	404	507	153
Initial Q (Qb), veh	0	0	0	0	0	0	0	0	0	0	0	0
Ped-Bike Adj(A_pbT)	1.00		0.96	1.00		0.97	1.00		0.96	1.00		0.97
Parking Bus, Adj	1.00	1.00	1.00	1.00	1.00	1.00	1.00	1.00	1.00	1.00	1.00	1.00
Work Zone On Approach		No			No			No			No	
Adj Sat Flow, veh/h/ln	1870	1870	1870	1870	1870	1870	1870	1870	1870	1870	1870	1870
Adj Flow Rate, veh/h	231	84	155	93	92	424	191	649	76	475	596	180
Peak Hour Factor	0.89	0.89	0.89	0.74	0.74	0.74	0.74	0.74	0.74	0.85	0.85	0.85
Percent Heavy Veh, %	2	2	2	2	2	2	2	2	2	2	2	2
Cap, veh/h	302	317	257	436	458	649	214	703	82	308	742	224
Arrive On Green	0.17	0.17	0.17	0.24	0.24	0.24	0.12	0.22	0.22	0.17	0.28	0.28
Sat Flow, veh/h	1781	1870	1518	1781	1870	1533	1781	3191	373	1781	2669	804
Grp Volume(v), veh/h	231	84	155	93	92	424	191	361	364	475	396	380
Grp Sat Flow(s),veh/h/ln	1781	1870	1518	1781	1870	1533	1781	1777	1787	1781	1777	1696
Q Serve(g_s), s	17.0	5.4	13.0	5.7	5.4	30.6	14.5	27.3	27.4	23.8	28.5	28.6
Cycle Q Clear(g_c), s	17.0	5.4	13.0	5.7	5.4	30.6	14.5	27.3	27.4	23.8	28.5	28.6
Prop In Lane	1.00		1.00	1.00		1.00	1.00		0.21	1.00		0.47
Lane Grp Cap(c), veh/h	302	317	257	436	458	649	214	392	394	308	494	472
V/C Ratio(X)	0.77	0.27	0.60	0.21	0.20	0.65	0.89	0.92	0.92	1.54	0.80	0.80
Avail Cap(c_a), veh/h	427	449	364	466	489	675	221	397	399	308	495	472
HCM Platoon Ratio	1.00	1.00	1.00	1.00	1.00	1.00	1.00	1.00	1.00	1.00	1.00	1.00
Upstream Filter(I)	1.00	1.00	1.00	1.00	1.00	1.00	1.00	1.00	1.00	1.00	1.00	1.00
Uniform Delay (d), s/veh	54.5	49.7	52.9	41.4	41.3	32.2	59.6	52.5	52.5	56.9	46.1	46.2
Incr Delay (d2), s/veh	6.7	0.6	3.2	0.1	0.1	1.6	31.4	28.7	29.1	259.2	11.9	12.6
Initial Q Delay(d3),s/veh	0.0	0.0	0.0	0.0	0.0	0.0	0.0	0.0	0.0	0.0	0.0	0.0
%ile BackOfQ(50%),veh/ln	8.1	2.6	5.1	2.5	2.5	11.4	8.4	15.1	15.3	32.7	14.0	13.5
Unsig. Movement Delay, s/veh												
LnGrp Delay(d),s/veh	61.2	50.3	56.1	41.5	41.3	33.9	91.1	81.2	81.6	316.1	58.0	58.8
LnGrp LOS	E	D	E	D	D	C	F	F	F	F	E	E
Approach Vol, veh/h		470			609			916			1251	
Approach Delay, s/veh		57.6			36.2			83.4			156.2	
Approach LOS		E			D			F			F	

Timer - Assigned Phs	1	2		4	5	6		8
Phs Duration (G+Y+Rc), s	21.2	45.6		40.1	29.2	37.6		30.7
Change Period (Y+Rc), s	* 4.7	* 7.3		6.4	5.4	7.3		7.4
Max Green Setting (Gmax), s	* 17	* 38		36.0	23.8	30.7		33.0
Max Q Clear Time (g_c+I1), s	16.5	30.6		32.6	25.8	29.4		19.0
Green Ext Time (p_c), s	0.0	4.9		0.5	0.0	0.9		2.2

Intersection Summary		
HCM 6th Ctrl Delay	98.9	
HCM 6th LOS	F	

Notes

* HCM 6th computational engine requires equal clearance times for the phases crossing the barrier.

Intersection	
Int Delay, s/veh	0.4

Movement	EBL	EBR	NBL	NBT	SBT	SBR
Lane Configurations						
Traffic Vol, veh/h	7	128	50	391	496	7
Future Vol, veh/h	7	128	50	391	496	7
Conflicting Peds, #/hr	10	10	10	0	0	10
Sign Control	Free	Free	Free	Free	Stop	Stop
RT Channelized	-	None	-	None	-	None
Storage Length	0	-	-	-	-	-
Veh in Median Storage, #	2	-	-	0	0	-
Grade, %	0	-	-	0	0	-
Peak Hour Factor	85	85	85	85	73	73
Heavy Vehicles, %	2	2	2	2	2	2
Mvmt Flow	8	151	59	460	679	10

Major/Minor	Major1		Minor2	
Conflicting Flow All	10	0	588	20
Stage 1	-	-	10	-
Stage 2	-	-	578	-
Critical Hdwy	4.14	-	6.54	6.94
Critical Hdwy Stg 1	-	-	-	-
Critical Hdwy Stg 2	-	-	5.54	-
Follow-up Hdwy	2.22	-	4.02	3.32
Pot Cap-1 Maneuver	1608	-	~ 420	1053
Stage 1	-	-	-	-
Stage 2	-	-	~ 499	-
Platoon blocked, %		-		
Mov Cap-1 Maneuver	1593	-	0	1033
Mov Cap-2 Maneuver	-	-	0	-
Stage 1	-	-	0	-
Stage 2	-	-	0	-

Approach	NB	SB
HCM Control Delay, s	0.9	
HCM LOS		-

Minor Lane/Major Mvmt	NBL	NBT	SBLn1	SBLn2
Capacity (veh/h)	1593	-	-	1033
HCM Lane V/C Ratio	0.037	-	-	0.338
HCM Control Delay (s)	7.3	0.1	-	10.3
HCM Lane LOS	A	A	-	B
HCM 95th %tile Q(veh)	0.1	-	-	1.5

Notes			
~: Volume exceeds capacity	$: Delay exceeds 300s	+: Computation Not Defined	*: All major volume in platoon

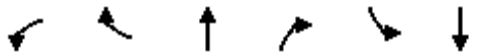

Movement	WBL	WBR	NBT	NBR	SBL	SBT
Lane Configurations						
Traffic Volume (veh/h)	105	220	275	60	192	486
Future Volume (veh/h)	105	220	275	60	192	486
Initial Q (Qb), veh	0	0	0	0	0	0
Ped-Bike Adj(A_pbT)	1.00	1.00		0.95	1.00	
Parking Bus, Adj	1.00	1.00	1.00	1.00	1.00	1.00
Work Zone On Approach	No		No			No
Adj Sat Flow, veh/h/ln	1870	1870	1870	1870	1870	1870
Adj Flow Rate, veh/h	194	407	299	65	206	523
Peak Hour Factor	0.54	0.54	0.92	0.92	0.93	0.93
Percent Heavy Veh, %	2	2	2	2	2	2
Cap, veh/h	544	484	722	154	257	879
Arrive On Green	0.31	0.31	0.25	0.25	0.14	0.47
Sat Flow, veh/h	1781	1585	2975	614	1781	1870
Grp Volume(v), veh/h	194	407	182	182	206	523
Grp Sat Flow(s),veh/h/ln	1781	1585	1777	1718	1781	1870
Q Serve(g_s), s	5.3	15.0	5.3	5.5	7.0	12.8
Cycle Q Clear(g_c), s	5.3	15.0	5.3	5.5	7.0	12.8
Prop In Lane	1.00	1.00		0.36	1.00	
Lane Grp Cap(c), veh/h	544	484	445	430	257	879
V/C Ratio(X)	0.36	0.84	0.41	0.42	0.80	0.59
Avail Cap(c_a), veh/h	1539	1369	1147	1109	1067	2510
HCM Platoon Ratio	1.00	1.00	1.00	1.00	1.00	1.00
Upstream Filter(I)	1.00	1.00	1.00	1.00	1.00	1.00
Uniform Delay (d), s/veh	16.9	20.2	19.5	19.6	25.8	12.1
Incr Delay (d2), s/veh	0.4	4.0	2.2	2.4	2.2	2.3
Initial Q Delay(d3),s/veh	0.0	0.0	0.0	0.0	0.0	0.0
%ile BackOfQ(50%),veh/ln	2.0	12.5	2.2	2.2	2.8	4.8
Unsig. Movement Delay, s/veh						
LnGrp Delay(d),s/veh	17.3	24.3	21.7	22.0	28.0	14.5
LnGrp LOS	B	C	C	C	C	B
Approach Vol, veh/h	601		364			729
Approach Delay, s/veh	22.0		21.8			18.3
Approach LOS	C		C			B

Timer - Assigned Phs		2		4	5	6
Phs Duration (G+Y+Rc), s		37.1		25.2	13.7	23.4
Change Period (Y+Rc), s		* 7.8		6.2	* 4.7	7.8
Max Green Setting (Gmax), s		* 84		53.8	* 37	40.2
Max Q Clear Time (g_c+I1), s		14.8		17.0	9.0	7.5
Green Ext Time (p_c), s		10.7		2.1	0.3	5.5

Intersection Summary	
HCM 6th Ctrl Delay	20.4
HCM 6th LOS	C

Notes

* HCM 6th computational engine requires equal clearance times for the phases crossing the barrier.

Intersection	
Int Delay, s/veh	1.5

Movement	EBT	EBR	WBL	WBT	NBL	NBR
Lane Configurations						
Traffic Vol, veh/h	316	40	46	213	15	41
Future Vol, veh/h	316	40	46	213	15	41
Conflicting Peds, #/hr	0	10	10	0	10	10
Sign Control	Free	Free	Free	Free	Stop	Stop
RT Channelized	-	None	-	None	-	None
Storage Length	-	-	-	-	0	-
Veh in Median Storage, #	0	-	-	0	0	-
Grade, %	0	-	-	0	0	-
Peak Hour Factor	67	67	91	91	86	86
Heavy Vehicles, %	2	2	2	2	2	2
Mvmt Flow	472	60	51	234	17	48

Major/Minor	Major1		Major2		Minor1	
Conflicting Flow All	0	0	542	0	858	522
Stage 1	-	-	-	-	512	-
Stage 2	-	-	-	-	346	-
Critical Hdwy	-	-	4.12	-	6.42	6.22
Critical Hdwy Stg 1	-	-	-	-	5.42	-
Critical Hdwy Stg 2	-	-	-	-	5.42	-
Follow-up Hdwy	-	-	2.218	-	3.518	3.318
Pot Cap-1 Maneuver	-	-	1027	-	327	555
Stage 1	-	-	-	-	602	-
Stage 2	-	-	-	-	716	-
Platoon blocked, %	-	-		-		
Mov Cap-1 Maneuver	-	-	1017	-	302	544
Mov Cap-2 Maneuver	-	-	-	-	302	-
Stage 1	-	-	-	-	596	-
Stage 2	-	-	-	-	668	-

Approach	EB	WB	NB
HCM Control Delay, s	0	1.5	14.4
HCM LOS			B

Minor Lane/Major Mvmt	NBLn1	EBT	EBR	WBL	WBT
Capacity (veh/h)	448	-	-	1017	-
HCM Lane V/C Ratio	0.145	-	-	0.05	-
HCM Control Delay (s)	14.4	-	-	8.7	0
HCM Lane LOS	B	-	-	A	A
HCM 95th %tile Q(veh)	0.5	-	-	0.2	-

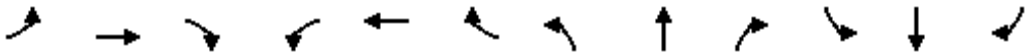

Movement	EBL	EBT	EBR	WBL	WBT	WBR	NBL	NBT	NBR	SBL	SBT	SBR
Lane Configurations												
Traffic Volume (veh/h)	83	188	84	40	103	182	93	376	34	268	478	61
Future Volume (veh/h)	83	188	84	40	103	182	93	376	34	268	478	61
Initial Q (Qb), veh	0	0	0	0	0	0	0	0	0	0	0	0
Ped-Bike Adj(A_pbT)	1.00		0.97	1.00		1.00	1.00		0.96	1.00		0.97
Parking Bus, Adj	1.00	1.00	1.00	1.00	1.00	1.00	1.00	1.00	1.00	1.00	1.00	1.00
Work Zone On Approach		No			No			No			No	
Adj Sat Flow, veh/h/ln	1870	1870	1870	1870	1870	1870	1870	1870	1870	1870	1870	1870
Adj Flow Rate, veh/h	122	276	124	44	114	0	95	384	35	285	509	65
Peak Hour Factor	0.68	0.68	0.68	0.90	0.90	0.90	0.98	0.98	0.98	0.94	0.94	0.94
Percent Heavy Veh, %	2	2	2	2	2	2	2	2	2	2	2	2
Cap, veh/h	160	558	243	75	663		125	766	329	349	1078	137
Arrive On Green	0.09	0.23	0.23	0.04	0.19	0.00	0.07	0.22	0.22	0.20	0.34	0.34
Sat Flow, veh/h	1781	2382	1036	1781	3554	1585	1781	3554	1528	1781	3160	402
Grp Volume(v), veh/h	122	204	196	44	114	0	95	384	35	285	285	289
Grp Sat Flow(s),veh/h/ln	1781	1777	1641	1781	1777	1585	1781	1777	1528	1781	1777	1785
Q Serve(g_s), s	4.3	6.4	6.7	1.6	1.7	0.0	3.4	6.1	1.2	9.9	8.1	8.2
Cycle Q Clear(g_c), s	4.3	6.4	6.7	1.6	1.7	0.0	3.4	6.1	1.2	9.9	8.1	8.2
Prop In Lane	1.00		0.63	1.00		1.00	1.00		1.00	1.00		0.23
Lane Grp Cap(c), veh/h	160	416	384	75	663		125	766	329	349	606	609
V/C Ratio(X)	0.76	0.49	0.51	0.58	0.17		0.76	0.50	0.11	0.82	0.47	0.47
Avail Cap(c_a), veh/h	565	1212	1119	288	1872		482	1943	836	1118	1607	1614
HCM Platoon Ratio	1.00	1.00	1.00	1.00	1.00	1.00	1.00	1.00	1.00	1.00	1.00	1.00
Upstream Filter(I)	1.00	1.00	1.00	1.00	1.00	0.00	1.00	1.00	1.00	1.00	1.00	1.00
Uniform Delay (d), s/veh	28.6	21.3	21.4	30.3	22.0	0.0	29.4	22.2	20.3	24.8	16.6	16.7
Incr Delay (d2), s/veh	7.2	0.9	1.1	7.0	0.1	0.0	9.2	0.5	0.1	4.7	0.6	0.6
Initial Q Delay(d3),s/veh	0.0	0.0	0.0	0.0	0.0	0.0	0.0	0.0	0.0	0.0	0.0	0.0
%ile BackOfQ(50%),veh/ln	2.0	2.5	2.4	0.8	0.7	0.0	1.6	2.4	0.4	4.2	3.0	3.0
Unsig. Movement Delay, s/veh												
LnGrp Delay(d),s/veh	35.8	22.2	22.5	37.2	22.1	0.0	38.6	22.7	20.4	29.5	17.2	17.2
LnGrp LOS	D	C	C	D	C		D	C	C	C	B	B
Approach Vol, veh/h		522			158	A		514			859	
Approach Delay, s/veh		25.5			26.3			25.5			21.3	
Approach LOS		C			C			C			C	

Timer - Assigned Phs	1	2	3	4	5	6	7	8
Phs Duration (G+Y+Rc), s	17.2	19.7	7.3	20.2	9.1	27.8	10.4	17.1
Change Period (Y+Rc), s	4.6	5.8	4.6	5.1	4.6	5.8	4.6	5.1
Max Green Setting (Gmax), s	40.4	35.2	10.4	43.9	17.4	58.2	20.4	33.9
Max Q Clear Time (g_c+I1), s	11.9	8.1	3.6	8.7	5.4	10.2	6.3	3.7
Green Ext Time (p_c), s	0.8	2.5	0.0	2.4	0.1	3.6	0.2	0.6

Intersection Summary	
HCM 6th Ctrl Delay	23.8
HCM 6th LOS	C

Notes

Unsignalized Delay for [WBR] is excluded from calculations of the approach delay and intersection delay.

Intersection	
Intersection Delay, s/veh	9.8
Intersection LOS	A

Movement	EBL	EBT	EBR	WBL	WBT	WBR	NBL	NBT	NBR	SBL	SBT	SBR
Lane Configurations												
Traffic Vol, veh/h	35	77	8	8	75	42	9	36	31	32	30	33
Future Vol, veh/h	35	77	8	8	75	42	9	36	31	32	30	33
Peak Hour Factor	0.74	0.74	0.74	0.79	0.79	0.79	0.45	0.45	0.45	0.87	0.87	0.87
Heavy Vehicles, %	2	2	2	2	2	2	2	2	2	2	2	2
Mvmt Flow	47	104	11	10	95	53	20	80	69	37	34	38
Number of Lanes	0	1	1	0	1	0	0	1	0	0	1	1

Approach	EB	WB	NB	SB
Opposing Approach	WB	EB	SB	NB
Opposing Lanes	1	2	2	1
Conflicting Approach Left	SB	NB	EB	WB
Conflicting Lanes Left	2	1	2	1
Conflicting Approach Right	NB	SB	WB	EB
Conflicting Lanes Right	1	2	1	2
HCM Control Delay	9.9	10	10.2	8.9
HCM LOS	A	A	B	A

Lane	NBLn1	EBLn1	EBLn2	WBLn1	SBLn1	SBLn2
Vol Left, %	12%	31%	0%	6%	52%	0%
Vol Thru, %	47%	69%	0%	60%	48%	0%
Vol Right, %	41%	0%	100%	34%	0%	100%
Sign Control	Stop	Stop	Stop	Stop	Stop	Stop
Traffic Vol by Lane	76	112	8	125	62	33
LT Vol	9	35	0	8	32	0
Through Vol	36	77	0	75	30	0
RT Vol	31	0	8	42	0	33
Lane Flow Rate	169	151	11	158	71	38
Geometry Grp	6	7	7	6	7	7
Degree of Util (X)	0.25	0.235	0.014	0.233	0.116	0.051
Departure Headway (Hd)	5.319	5.596	4.733	5.308	5.842	4.875
Convergence, Y/N	Yes	Yes	Yes	Yes	Yes	Yes
Cap	670	637	750	671	609	728
Service Time	3.388	3.367	2.504	3.381	3.617	2.65
HCM Lane V/C Ratio	0.252	0.237	0.015	0.235	0.117	0.052
HCM Control Delay	10.2	10.1	7.6	10	9.4	7.9
HCM Lane LOS	B	B	A	A	A	A
HCM 95th-tile Q	1	0.9	0	0.9	0.4	0.2

Intersection	
Intersection Delay, s/veh	10.7
Intersection LOS	B

Movement	EBL	EBT	EBR	WBL	WBT	WBR	NBL	NBT	NBR	SBL	SBT	SBR
Lane Configurations												
Traffic Vol, veh/h	4	73	21	2	74	124	19	68	1	79	112	8
Future Vol, veh/h	4	73	21	2	74	124	19	68	1	79	112	8
Peak Hour Factor	0.68	0.68	0.68	0.66	0.66	0.66	0.70	0.70	0.70	0.84	0.84	0.84
Heavy Vehicles, %	2	2	2	2	2	2	2	2	2	2	2	2
Mvmt Flow	6	107	31	3	112	188	27	97	1	94	133	10
Number of Lanes	0	1	0	0	1	0	0	1	0	0	1	0

Approach	EB	WB	NB	SB
Opposing Approach	WB	EB	SB	NB
Opposing Lanes	1	1	1	1
Conflicting Approach Left	SB	NB	EB	WB
Conflicting Lanes Left	1	1	1	1
Conflicting Approach Right	NB	SB	WB	EB
Conflicting Lanes Right	1	1	1	1
HCM Control Delay	9.7	11.1	9.8	11.2
HCM LOS	A	B	A	B

Lane	NBLn1	EBLn1	WBLn1	SBLn1
Vol Left, %	22%	4%	1%	40%
Vol Thru, %	77%	74%	37%	56%
Vol Right, %	1%	21%	62%	4%
Sign Control	Stop	Stop	Stop	Stop
Traffic Vol by Lane	88	98	200	199
LT Vol	19	4	2	79
Through Vol	68	73	74	112
RT Vol	1	21	124	8
Lane Flow Rate	126	144	303	237
Geometry Grp	1	1	1	1
Degree of Util (X)	0.192	0.21	0.405	0.351
Departure Headway (Hd)	5.496	5.251	4.816	5.332
Convergence, Y/N	Yes	Yes	Yes	Yes
Cap	652	683	752	675
Service Time	3.533	3.29	2.816	3.364
HCM Lane V/C Ratio	0.193	0.211	0.403	0.351
HCM Control Delay	9.8	9.7	11.1	11.2
HCM Lane LOS	A	A	B	B
HCM 95th-tile Q	0.7	0.8	2	1.6

Intersection	
Intersection Delay, s/veh	14.1
Intersection LOS	B

Movement	EBL	EBT	EBR	WBL	WBT	WBR	NBL	NBT	NBR	SBL	SBT	SBR
Lane Configurations												
Traffic Vol, veh/h	78	171	12	11	115	53	33	108	37	102	161	50
Future Vol, veh/h	78	171	12	11	115	53	33	108	37	102	161	50
Peak Hour Factor	0.86	0.86	0.86	0.86	0.86	0.86	0.65	0.65	0.65	0.85	0.85	0.85
Heavy Vehicles, %	2	2	2	2	2	2	2	2	2	2	2	2
Mvmt Flow	91	199	14	13	134	62	51	166	57	120	189	59
Number of Lanes	1	1	0	0	1	0	1	1	0	1	1	0

Approach	EB	WB	NB	SB
Opposing Approach	WB	EB	SB	NB
Opposing Lanes	1	2	2	2
Conflicting Approach Left	SB	NB	EB	WB
Conflicting Lanes Left	2	2	2	1
Conflicting Approach Right	NB	SB	WB	EB
Conflicting Lanes Right	2	2	1	2
HCM Control Delay	13.8	14.9	13.9	14.2
HCM LOS	B	B	B	B

Lane	NBLn1	NBLn2	EBLn1	EBLn2	WBLn1	SBLn1	SBLn2
Vol Left, %	100%	0%	100%	0%	6%	100%	0%
Vol Thru, %	0%	74%	0%	93%	64%	0%	76%
Vol Right, %	0%	26%	0%	7%	30%	0%	24%
Sign Control	Stop	Stop	Stop	Stop	Stop	Stop	Stop
Traffic Vol by Lane	33	145	78	183	179	102	211
LT Vol	33	0	78	0	11	102	0
Through Vol	0	108	0	171	115	0	161
RT Vol	0	37	0	12	53	0	50
Lane Flow Rate	51	223	91	213	208	120	248
Geometry Grp	7	7	7	7	6	7	7
Degree of Util (X)	0.106	0.423	0.19	0.412	0.408	0.245	0.46
Departure Headway (Hd)	7.522	6.827	7.525	6.968	7.058	7.354	6.673
Convergence, Y/N	Yes	Yes	Yes	Yes	Yes	Yes	Yes
Cap	477	529	477	517	510	488	541
Service Time	5.263	4.567	5.264	4.707	5.1	5.094	4.413
HCM Lane V/C Ratio	0.107	0.422	0.191	0.412	0.408	0.246	0.458
HCM Control Delay	11.2	14.5	12	14.5	14.9	12.5	15
HCM Lane LOS	B	B	B	B	B	B	B
HCM 95th-tile Q	0.4	2.1	0.7	2	2	1	2.4



Movement	EBL	EBT	EBR	WBL	WBT	WBR	NBL	NBT	NBR	SBL	SBT	SBR
Lane Configurations												
Traffic Volume (veh/h)	34	202	73	1	102	64	40	133	3	90	325	38
Future Volume (veh/h)	34	202	73	1	102	64	40	133	3	90	325	38
Initial Q (Qb), veh	0	0	0	0	0	0	0	0	0	0	0	0
Ped-Bike Adj(A_pbT)	0.99		0.95	0.99		0.95	1.00		0.95	1.00		0.96
Parking Bus, Adj	1.00	1.00	1.00	1.00	1.00	1.00	1.00	1.00	1.00	1.00	1.00	1.00
Work Zone On Approach		No			No			No			No	
Adj Sat Flow, veh/h/ln	1870	1870	1870	1870	1870	1870	1870	1870	1870	1870	1870	1870
Adj Flow Rate, veh/h	46	273	99	1	107	67	47	156	4	103	374	44
Peak Hour Factor	0.74	0.74	0.74	0.95	0.95	0.95	0.85	0.85	0.85	0.87	0.87	0.87
Percent Heavy Veh, %	2	2	2	2	2	2	2	2	2	2	2	2
Cap, veh/h	92	362	124	51	323	201	105	600	15	151	582	69
Arrive On Green	0.31	0.31	0.31	0.31	0.31	0.31	0.06	0.33	0.33	0.08	0.36	0.36
Sat Flow, veh/h	119	1183	404	2	1055	655	1781	1813	46	1781	1633	192
Grp Volume(v), veh/h	418	0	0	175	0	0	47	0	160	103	0	418
Grp Sat Flow(s),veh/h/ln	1706	0	0	1712	0	0	1781	0	1859	1781	0	1825
Q Serve(g_s), s	8.3	0.0	0.0	0.0	0.0	0.0	1.8	0.0	4.5	4.1	0.0	13.8
Cycle Q Clear(g_c), s	16.1	0.0	0.0	5.7	0.0	0.0	1.8	0.0	4.5	4.1	0.0	13.8
Prop In Lane	0.11		0.24	0.01		0.38	1.00		0.03	1.00		0.11
Lane Grp Cap(c), veh/h	577	0	0	574	0	0	105	0	616	151	0	651
V/C Ratio(X)	0.72	0.00	0.00	0.30	0.00	0.00	0.45	0.00	0.26	0.68	0.00	0.64
Avail Cap(c_a), veh/h	1466	0	0	1481	0	0	229	0	1249	525	0	1519
HCM Platoon Ratio	1.00	1.00	1.00	1.00	1.00	1.00	1.00	1.00	1.00	1.00	1.00	1.00
Upstream Filter(I)	1.00	0.00	0.00	1.00	0.00	0.00	1.00	0.00	1.00	1.00	0.00	1.00
Uniform Delay (d), s/veh	22.9	0.0	0.0	19.4	0.0	0.0	32.8	0.0	17.7	32.1	0.0	19.4
Incr Delay (d2), s/veh	1.7	0.0	0.0	0.3	0.0	0.0	1.1	0.0	1.0	2.0	0.0	4.8
Initial Q Delay(d3),s/veh	0.0	0.0	0.0	0.0	0.0	0.0	0.0	0.0	0.0	0.0	0.0	0.0
%ile BackOfQ(50%),veh/ln	6.4	0.0	0.0	2.2	0.0	0.0	0.8	0.0	1.9	1.7	0.0	6.1
Unsig. Movement Delay, s/veh												
LnGrp Delay(d),s/veh	24.6	0.0	0.0	19.7	0.0	0.0	33.9	0.0	18.7	34.2	0.0	24.2
LnGrp LOS	C	A	A	B	A	A	C	A	B	C	A	C
Approach Vol, veh/h		418			175			207			521	
Approach Delay, s/veh		24.6			19.7			22.2			26.2	
Approach LOS		C			B			C			C	

Timer - Assigned Phs	1	2		4	5	6		8
Phs Duration (G+Y+Rc), s	9.0	33.7		29.6	10.8	31.8		29.6
Change Period (Y+Rc), s	* 4.7	7.9		7.5	* 4.7	* 7.9		7.5
Max Green Setting (Gmax), s	* 9.3	60.1		60.5	* 21	* 49		60.5
Max Q Clear Time (g_c+I1), s	13.8	15.8		7.7	6.1	6.5		18.1
Green Ext Time (p_c), s	0.0	9.4		1.2	0.1	3.0		3.1

Intersection Summary	
HCM 6th Ctrl Delay	24.2
HCM 6th LOS	C

Notes

* HCM 6th computational engine requires equal clearance times for the phases crossing the barrier.

Intersection	
Int Delay, s/veh	2.4

Movement	EBL	EBT	EBR	WBL	WBT	WBR	NBL	NBT	NBR	SBL	SBT	SBR
Lane Configurations		↕			↕			↕			↕	
Traffic Vol, veh/h	14	282	0	0	163	34	0	0	0	55	0	10
Future Vol, veh/h	14	282	0	0	163	34	0	0	0	55	0	10
Conflicting Peds, #/hr	10	0	10	10	0	10	10	0	10	10	0	10
Sign Control	Free	Free	Free	Free	Free	Free	Stop	Stop	Stop	Stop	Stop	Stop
RT Channelized	-	-	None	-	-	None	-	-	None	-	-	None
Storage Length	-	-	-	-	-	-	-	-	-	-	-	-
Veh in Median Storage, #	-	0	-	-	0	-	-	0	-	-	0	-
Grade, %	-	0	-	-	0	-	-	0	-	-	0	-
Peak Hour Factor	82	82	82	95	95	95	92	92	92	68	68	68
Heavy Vehicles, %	2	2	2	2	2	2	2	2	2	2	2	2
Mvmt Flow	17	344	0	0	172	36	0	0	0	81	0	15

Major/Minor	Major1			Major2			Minor1			Minor2		
Conflicting Flow All	218	0	0	354	0	0	596	606	364	588	588	210
Stage 1	-	-	-	-	-	-	388	388	-	200	200	-
Stage 2	-	-	-	-	-	-	208	218	-	388	388	-
Critical Hdwy	4.12	-	-	4.12	-	-	7.12	6.52	6.22	7.12	6.52	6.22
Critical Hdwy Stg 1	-	-	-	-	-	-	6.12	5.52	-	6.12	5.52	-
Critical Hdwy Stg 2	-	-	-	-	-	-	6.12	5.52	-	6.12	5.52	-
Follow-up Hdwy	2.218	-	-	2.218	-	-	3.518	4.018	3.318	3.518	4.018	3.318
Pot Cap-1 Maneuver	1352	-	-	1205	-	-	415	411	681	421	421	830
Stage 1	-	-	-	-	-	-	636	609	-	802	736	-
Stage 2	-	-	-	-	-	-	794	723	-	636	609	-
Platoon blocked, %		-	-		-	-						
Mov Cap-1 Maneuver	1339	-	-	1194	-	-	395	396	668	408	406	814
Mov Cap-2 Maneuver	-	-	-	-	-	-	395	396	-	408	406	-
Stage 1	-	-	-	-	-	-	620	593	-	782	729	-
Stage 2	-	-	-	-	-	-	772	716	-	620	593	-

Approach	EB	WB	NB	SB
HCM Control Delay, s	0.4	0	0	15.4
HCM LOS			A	C

Minor Lane/Major Mvmt	NBLn1	EBL	EBT	EBR	WBL	WBT	WBR	SBLn1
Capacity (veh/h)	-	1339	-	-	1194	-	-	442
HCM Lane V/C Ratio	-	0.013	-	-	-	-	-	0.216
HCM Control Delay (s)	0	7.7	0	-	0	-	-	15.4
HCM Lane LOS	A	A	A	-	A	-	-	C
HCM 95th %tile Q(veh)	-	0	-	-	0	-	-	0.8

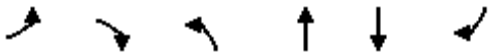

Movement	EBL	EBR	NBL	NBT	SBT	SBR
Lane Configurations						
Traffic Volume (veh/h)	78	264	139	389	526	49
Future Volume (veh/h)	78	264	139	389	526	49
Initial Q (Qb), veh	0	0	0	0	0	0
Ped-Bike Adj(A_pbT)	1.00	1.00	1.00			0.96
Parking Bus, Adj	1.00	1.00	1.00	1.00	1.00	1.00
Work Zone On Approach	No			No	No	
Adj Sat Flow, veh/h/ln	1870	1870	1870	1870	1870	1870
Adj Flow Rate, veh/h	100	338	149	418	566	53
Peak Hour Factor	0.78	0.78	0.93	0.93	0.93	0.93
Percent Heavy Veh, %	2	2	2	2	2	2
Cap, veh/h	407	537	197	1099	687	64
Arrive On Green	0.23	0.23	0.11	0.59	0.41	0.41
Sat Flow, veh/h	1781	1585	1781	1870	1677	157
Grp Volume(v), veh/h	100	338	149	418	0	619
Grp Sat Flow(s),veh/h/ln	1781	1585	1781	1870	0	1834
Q Serve(g_s), s	2.7	10.7	4.8	7.1	0.0	18.0
Cycle Q Clear(g_c), s	2.7	10.7	4.8	7.1	0.0	18.0
Prop In Lane	1.00	1.00	1.00			0.09
Lane Grp Cap(c), veh/h	407	537	197	1099	0	752
V/C Ratio(X)	0.25	0.63	0.75	0.38	0.00	0.82
Avail Cap(c_a), veh/h	596	706	1014	3725	0	2487
HCM Platoon Ratio	1.00	1.00	1.00	1.00	1.00	1.00
Upstream Filter(I)	1.00	1.00	1.00	1.00	0.00	1.00
Uniform Delay (d), s/veh	18.9	16.6	25.8	6.5	0.0	15.7
Incr Delay (d2), s/veh	0.3	1.2	5.8	0.2	0.0	2.3
Initial Q Delay(d3),s/veh	0.0	0.0	0.0	0.0	0.0	0.0
%ile BackOfQ(50%),veh/ln	1.1	0.2	2.2	1.9	0.0	6.5
Unsig. Movement Delay, s/veh						
LnGrp Delay(d),s/veh	19.2	17.8	31.5	6.8	0.0	18.0
LnGrp LOS	B	B	C	A	A	B
Approach Vol, veh/h	438			567	619	
Approach Delay, s/veh	18.1			13.3	18.0	
Approach LOS	B			B	B	

Timer - Assigned Phs		2		4	5	6
Phs Duration (G+Y+Rc), s		41.1		18.6	10.6	30.5
Change Period (Y+Rc), s		6.0		5.0	4.0	6.0
Max Green Setting (Gmax), s		119.0		20.0	34.0	81.0
Max Q Clear Time (g_c+I1), s		9.1		12.7	6.8	20.0
Green Ext Time (p_c), s		2.7		0.9	0.4	4.5

Intersection Summary		
HCM 6th Ctrl Delay		16.4
HCM 6th LOS		B



Movement	WBL	WBR	NBT	NBR	SBL	SBT
Lane Configurations						
Traffic Volume (veh/h)	48	47	429	37	38	526
Future Volume (veh/h)	48	47	429	37	38	526
Initial Q (Qb), veh	0	0	0	0	0	0
Ped-Bike Adj(A_pbT)	1.00	1.00		0.96	1.00	
Parking Bus, Adj	1.00	1.00	1.00	1.00	1.00	1.00
Work Zone On Approach	No		No			No
Adj Sat Flow, veh/h/ln	1870	1870	1870	1870	1870	1870
Adj Flow Rate, veh/h	58	57	471	41	40	554
Peak Hour Factor	0.83	0.83	0.91	0.91	0.95	0.95
Percent Heavy Veh, %	2	2	2	2	2	2
Cap, veh/h	176	230	674	59	83	1061
Arrive On Green	0.10	0.10	0.40	0.40	0.05	0.57
Sat Flow, veh/h	1781	1585	1689	147	1781	1870
Grp Volume(v), veh/h	58	57	0	512	40	554
Grp Sat Flow(s),veh/h/ln	1781	1585	0	1836	1781	1870
Q Serve(g_s), s	1.0	1.0	0.0	7.6	0.7	6.0
Cycle Q Clear(g_c), s	1.0	1.0	0.0	7.6	0.7	6.0
Prop In Lane	1.00	1.00		0.08	1.00	
Lane Grp Cap(c), veh/h	176	230	0	733	83	1061
V/C Ratio(X)	0.33	0.25	0.00	0.70	0.48	0.52
Avail Cap(c_a), veh/h	812	796	0	5689	974	7044
HCM Platoon Ratio	1.00	1.00	1.00	1.00	1.00	1.00
Upstream Filter(I)	1.00	1.00	0.00	1.00	1.00	1.00
Uniform Delay (d), s/veh	13.8	12.5	0.0	8.2	15.3	4.4
Incr Delay (d2), s/veh	1.1	0.6	0.0	1.2	4.3	0.4
Initial Q Delay(d3),s/veh	0.0	0.0	0.0	0.0	0.0	0.0
%ile BackOfQ(50%),veh/ln	0.4	0.3	0.0	1.8	0.3	0.6
Unsig. Movement Delay, s/veh						
LnGrp Delay(d),s/veh	14.9	13.0	0.0	9.5	19.6	4.8
LnGrp LOS	B	B	A	A	B	A
Approach Vol, veh/h	115		512			594
Approach Delay, s/veh	14.0		9.5			5.8
Approach LOS	B		A			A

Timer - Assigned Phs	1	2				6	8
Phs Duration (G+Y+Rc), s	5.5	19.1				24.7	8.3
Change Period (Y+Rc), s	4.0	6.0				6.0	5.0
Max Green Setting (Gmax), s	18.3	102.0				124.0	15.0
Max Q Clear Time (g_c+I1), s	2.7	9.6				8.0	3.0
Green Ext Time (p_c), s	0.0	3.5				3.8	0.2

Intersection Summary	
HCM 6th Ctrl Delay	8.1
HCM 6th LOS	A



Movement	EBL	EBT	EBR	WBL	WBT	WBR	NBL	NBT	NBR	SBL	SBT	SBR
Lane Configurations												
Traffic Volume (veh/h)	5	77	3	32	82	145	6	6	9	225	24	6
Future Volume (veh/h)	5	77	3	32	82	145	6	6	9	225	24	6
Initial Q (Qb), veh	0	0	0	0	0	0	0	0	0	0	0	0
Ped-Bike Adj(A_pbT)	1.00		0.88	1.00		0.92	0.99		0.98	1.00		0.97
Parking Bus, Adj	1.00	1.00	1.00	1.00	1.00	1.00	1.00	1.00	1.00	1.00	1.00	1.00
Work Zone On Approach		No			No			No			No	
Adj Sat Flow, veh/h/ln	1870	1870	1870	1870	1870	1870	1870	1870	1870	1870	1870	1870
Adj Flow Rate, veh/h	6	88	3	34	88	156	11	11	17	250	27	7
Peak Hour Factor	0.88	0.88	0.88	0.93	0.93	0.93	0.53	0.53	0.53	0.90	0.90	0.90
Percent Heavy Veh, %	2	2	2	2	2	2	2	2	2	2	2	2
Cap, veh/h	10	145	5	71	183	200	292	295	422	912	871	226
Arrive On Green	0.09	0.09	0.09	0.14	0.14	0.14	0.61	0.61	0.61	0.61	0.61	0.61
Sat Flow, veh/h	114	1674	57	514	1331	1456	409	481	688	1376	1421	368
Grp Volume(v), veh/h	97	0	0	122	0	156	39	0	0	250	0	34
Grp Sat Flow(s),veh/h/ln	1845	0	0	1845	0	1456	1578	0	0	1376	0	1789
Q Serve(g_s), s	5.6	0.0	0.0	6.8	0.0	11.5	0.0	0.0	0.0	8.2	0.0	0.8
Cycle Q Clear(g_c), s	5.6	0.0	0.0	6.8	0.0	11.5	1.0	0.0	0.0	9.2	0.0	0.8
Prop In Lane	0.06		0.03	0.28		1.00	0.28		0.44	1.00		0.21
Lane Grp Cap(c), veh/h	160	0	0	254	0	200	1009	0	0	912	0	1097
V/C Ratio(X)	0.61	0.00	0.00	0.48	0.00	0.78	0.04	0.00	0.00	0.27	0.00	0.03
Avail Cap(c_a), veh/h	483	0	0	582	0	460	1009	0	0	912	0	1097
HCM Platoon Ratio	1.00	1.00	1.00	1.00	1.00	1.00	1.00	1.00	1.00	1.00	1.00	1.00
Upstream Filter(I)	1.00	0.00	0.00	1.00	0.00	1.00	1.00	0.00	0.00	1.00	0.00	1.00
Uniform Delay (d), s/veh	48.8	0.0	0.0	44.1	0.0	46.2	8.5	0.0	0.0	10.0	0.0	8.4
Incr Delay (d2), s/veh	1.4	0.0	0.0	0.5	0.0	2.5	0.1	0.0	0.0	0.7	0.0	0.1
Initial Q Delay(d3),s/veh	0.0	0.0	0.0	0.0	0.0	0.0	0.0	0.0	0.0	0.0	0.0	0.0
%ile BackOfQ(50%),veh/ln	2.6	0.0	0.0	3.1	0.0	4.2	0.4	0.0	0.0	2.9	0.0	0.3
Unsig. Movement Delay, s/veh												
LnGrp Delay(d),s/veh	50.2	0.0	0.0	44.7	0.0	48.6	8.6	0.0	0.0	10.7	0.0	8.5
LnGrp LOS	D	A	A	D	A	D	A	A	A	B	A	A
Approach Vol, veh/h		97			278			39			284	
Approach Delay, s/veh		50.2			46.9			8.6			10.5	
Approach LOS		D			D			A			B	

Timer - Assigned Phs	2	4	6	8
Phs Duration (G+Y+Rc), s	74.0	15.6	74.0	21.3
Change Period (Y+Rc), s	6.0	6.0	6.0	6.0
Max Green Setting (Gmax), s	68.0	29.0	68.0	35.0
Max Q Clear Time (g_c+I1), s	3.0	7.6	11.2	13.5
Green Ext Time (p_c), s	0.1	0.3	2.5	0.6

Intersection Summary	
HCM 6th Ctrl Delay	30.4
HCM 6th LOS	C



Movement	EBL	EBT	EBR	WBL	WBT	WBR	NBL	NBT	NBR	SBL	SBT	SBR
Lane Configurations												
Traffic Volume (veh/h)	25	40	250	5	27	13	174	989	6	48	1476	57
Future Volume (veh/h)	25	40	250	5	27	13	174	989	6	48	1476	57
Initial Q (Qb), veh	0	0	0	0	0	0	0	0	0	0	0	0
Ped-Bike Adj(A_pbT)	1.00		0.94	1.00		0.96	1.00		0.96	1.00		0.98
Parking Bus, Adj	1.00	1.00	1.00	1.00	1.00	1.00	1.00	1.00	1.00	1.00	1.00	1.00
Work Zone On Approach		No			No			No			No	
Adj Sat Flow, veh/h/ln	1870	1870	1870	1870	1870	1870	1870	1870	1870	1870	1870	1870
Adj Flow Rate, veh/h	27	43	266	6	34	16	187	1063	6	51	1570	61
Peak Hour Factor	0.94	0.94	0.94	0.79	0.79	0.79	0.93	0.93	0.93	0.94	0.94	0.94
Percent Heavy Veh, %	2	2	2	2	2	2	2	2	2	2	2	2
Cap, veh/h	88	382	766	27	317	258	287	1759	10	121	1673	807
Arrive On Green	0.05	0.20	0.20	0.02	0.17	0.17	0.08	0.49	0.49	0.07	0.47	0.47
Sat Flow, veh/h	1781	1870	2617	1781	1870	1518	3456	3622	20	1781	3554	1549
Grp Volume(v), veh/h	27	43	266	6	34	16	187	521	548	51	1570	61
Grp Sat Flow(s),veh/h/ln	1781	1870	1309	1781	1870	1518	1728	1777	1866	1781	1777	1549
Q Serve(g_s), s	1.8	2.3	9.7	0.4	1.8	1.1	6.3	25.7	25.7	3.3	50.3	2.4
Cycle Q Clear(g_c), s	1.8	2.3	9.7	0.4	1.8	1.1	6.3	25.7	25.7	3.3	50.3	2.4
Prop In Lane	1.00		1.00	1.00		1.00	1.00		0.01	1.00		1.00
Lane Grp Cap(c), veh/h	88	382	766	27	317	258	287	863	906	121	1673	807
V/C Ratio(X)	0.31	0.11	0.35	0.22	0.11	0.06	0.65	0.60	0.60	0.42	0.94	0.08
Avail Cap(c_a), veh/h	148	716	1234	148	716	581	288	863	906	148	1677	809
HCM Platoon Ratio	1.00	1.00	1.00	1.00	1.00	1.00	1.00	1.00	1.00	1.00	1.00	1.00
Upstream Filter(I)	1.00	1.00	1.00	1.00	1.00	1.00	1.00	1.00	1.00	1.00	1.00	1.00
Uniform Delay (d), s/veh	55.1	39.0	34.0	58.5	42.2	41.9	53.4	22.5	22.5	53.7	30.2	14.4
Incr Delay (d2), s/veh	0.7	0.3	0.6	1.5	0.3	0.2	4.1	3.1	3.0	0.9	11.6	0.2
Initial Q Delay(d3),s/veh	0.0	0.0	0.0	0.0	0.0	0.0	0.0	0.0	0.0	0.0	0.0	0.0
%ile BackOfQ(50%),veh/ln	0.8	1.1	3.2	0.2	0.9	0.4	2.8	10.5	11.0	1.4	21.9	0.9
Unsig. Movement Delay, s/veh												
LnGrp Delay(d),s/veh	55.9	39.2	34.6	60.0	42.5	42.1	57.5	25.6	25.5	54.6	41.8	14.6
LnGrp LOS	E	D	C	E	D	D	E	C	C	D	D	B
Approach Vol, veh/h		336			56			1256			1682	
Approach Delay, s/veh		36.9			44.3			30.3			41.2	
Approach LOS		D			D			C			D	

Timer - Assigned Phs	1	2	3	4	5	6	7	8
Phs Duration (G+Y+Rc), s	13.9	66.8	7.5	32.0	15.7	65.0	11.6	27.9
Change Period (Y+Rc), s	* 5.7	* 8.4	* 5.7	7.5	* 5.7	* 8.4	* 5.7	7.5
Max Green Setting (Gmax), s	* 10	* 57	* 10	46.0	* 10	* 57	* 10	46.0
Max Q Clear Time (g_c+I1), s	5.3	27.7	2.4	11.7	8.3	52.3	3.8	3.8
Green Ext Time (p_c), s	0.0	19.5	0.0	3.0	0.1	4.2	0.0	0.4

Intersection Summary	
HCM 6th Ctrl Delay	36.7
HCM 6th LOS	D

Notes

* HCM 6th computational engine requires equal clearance times for the phases crossing the barrier.

Intersection	
Int Delay, s/veh	2.1

Movement	WBL	WBR	NBT	NBR	SBL	SBT
Lane Configurations						
Traffic Vol, veh/h	11	48	129	19	82	317
Future Vol, veh/h	11	48	129	19	82	317
Conflicting Peds, #/hr	10	10	0	10	10	0
Sign Control	Stop	Stop	Free	Free	Free	Free
RT Channelized	-	None	-	None	-	None
Storage Length	0	-	-	-	-	-
Veh in Median Storage, #	0	-	0	-	-	0
Grade, %	0	-	0	-	-	0
Peak Hour Factor	92	92	92	92	92	92
Heavy Vehicles, %	2	2	2	2	2	2
Mvmt Flow	12	52	140	21	89	345

Major/Minor	Minor1		Major1		Major2	
Conflicting Flow All	694	171	0	0	171	0
Stage 1	161	-	-	-	-	-
Stage 2	533	-	-	-	-	-
Critical Hdwy	6.42	6.22	-	-	4.12	-
Critical Hdwy Stg 1	5.42	-	-	-	-	-
Critical Hdwy Stg 2	5.42	-	-	-	-	-
Follow-up Hdwy	3.518	3.318	-	-	2.218	-
Pot Cap-1 Maneuver	409	873	-	-	1406	-
Stage 1	868	-	-	-	-	-
Stage 2	588	-	-	-	-	-
Platoon blocked, %			-	-		-
Mov Cap-1 Maneuver	369	856	-	-	1393	-
Mov Cap-2 Maneuver	369	-	-	-	-	-
Stage 1	859	-	-	-	-	-
Stage 2	536	-	-	-	-	-

Approach	WB	NB	SB
HCM Control Delay, s	10.8	0	1.6
HCM LOS	B		

Minor Lane/Major Mvmt	NBT	NBR	WBLn1	SBL	SBT
Capacity (veh/h)	-	-	687	1393	-
HCM Lane V/C Ratio	-	-	0.093	0.064	-
HCM Control Delay (s)	-	-	10.8	7.8	0
HCM Lane LOS	-	-	B	A	A
HCM 95th %tile Q(veh)	-	-	0.3	0.2	-

Intersection	
Int Delay, s/veh	3.7

Movement	EBL	EBR	NBL	NBT	SBT	SBR
Lane Configurations						
Traffic Vol, veh/h	71	24	32	503	694	96
Future Vol, veh/h	71	24	32	503	694	96
Conflicting Peds, #/hr	10	10	10	0	0	10
Sign Control	Stop	Stop	Free	Free	Free	Free
RT Channelized	-	None	-	None	-	None
Storage Length	0	-	410	-	-	80
Veh in Median Storage, #	0	-	-	0	0	-
Grade, %	0	-	-	0	0	-
Peak Hour Factor	92	92	92	92	92	92
Heavy Vehicles, %	2	2	2	2	2	2
Mvmt Flow	77	26	35	547	754	104

Major/Minor	Minor2		Major1		Major2	
Conflicting Flow All	1391	774	868	0	-	0
Stage 1	764	-	-	-	-	-
Stage 2	627	-	-	-	-	-
Critical Hdwy	6.42	6.22	4.12	-	-	-
Critical Hdwy Stg 1	5.42	-	-	-	-	-
Critical Hdwy Stg 2	5.42	-	-	-	-	-
Follow-up Hdwy	3.518	3.318	2.218	-	-	-
Pot Cap-1 Maneuver	157	398	776	-	-	-
Stage 1	460	-	-	-	-	-
Stage 2	532	-	-	-	-	-
Platoon blocked, %				-	-	-
Mov Cap-1 Maneuver	147	390	769	-	-	-
Mov Cap-2 Maneuver	147	-	-	-	-	-
Stage 1	434	-	-	-	-	-
Stage 2	527	-	-	-	-	-

Approach	EB	NB	SB
HCM Control Delay, s	52.1	0.6	0
HCM LOS	F		

Minor Lane/Major Mvmt	NBL	NBT	EBLn1	SBT	SBR
Capacity (veh/h)	769	-	174	-	-
HCM Lane V/C Ratio	0.045	-	0.593	-	-
HCM Control Delay (s)	9.9	-	52.1	-	-
HCM Lane LOS	A	-	F	-	-
HCM 95th %tile Q(veh)	0.1	-	3.2	-	-

Intersection	
Int Delay, s/veh	3.3

Movement	EBL	EBT	WBT	WBR	SBL	SBR
Lane Configurations						
Traffic Vol, veh/h	0	0	0	17	10	0
Future Vol, veh/h	0	0	0	17	10	0
Conflicting Peds, #/hr	10	0	0	10	10	10
Sign Control	Free	Free	Free	Free	Stop	Stop
RT Channelized	-	None	-	None	-	None
Storage Length	-	-	-	-	0	-
Veh in Median Storage, #	-	0	0	-	0	-
Grade, %	-	0	0	-	0	-
Peak Hour Factor	92	92	92	92	92	92
Heavy Vehicles, %	2	2	2	2	2	2
Mvmt Flow	0	0	0	18	11	0

Major/Minor	Major1		Major2		Minor2	
Conflicting Flow All	28	0	-	0	29	29
Stage 1	-	-	-	-	19	-
Stage 2	-	-	-	-	10	-
Critical Hdwy	4.12	-	-	-	6.42	6.22
Critical Hdwy Stg 1	-	-	-	-	5.42	-
Critical Hdwy Stg 2	-	-	-	-	5.42	-
Follow-up Hdwy	2.218	-	-	-	3.518	3.318
Pot Cap-1 Maneuver	1585	-	-	-	986	1046
Stage 1	-	-	-	-	1004	-
Stage 2	-	-	-	-	1013	-
Platoon blocked, %		-	-	-		
Mov Cap-1 Maneuver	1570	-	-	-	966	1026
Mov Cap-2 Maneuver	-	-	-	-	966	-
Stage 1	-	-	-	-	994	-
Stage 2	-	-	-	-	1003	-

Approach	EB	WB	SB
HCM Control Delay, s	0	0	8.8
HCM LOS			A

Minor Lane/Major Mvmt	EBL	EBT	WBT	WBR	SBLn1
Capacity (veh/h)	1570	-	-	-	966
HCM Lane V/C Ratio	-	-	-	-	0.011
HCM Control Delay (s)	0	-	-	-	8.8
HCM Lane LOS	A	-	-	-	A
HCM 95th %tile Q(veh)	0	-	-	-	0

Intersection	
Int Delay, s/veh	1.6

Movement	EBL	EBT	WBT	WBR	SBL	SBR
Lane Configurations						
Traffic Vol, veh/h	0	10	17	17	10	0
Future Vol, veh/h	0	10	17	17	10	0
Conflicting Peds, #/hr	10	0	0	10	10	10
Sign Control	Free	Free	Free	Free	Stop	Stop
RT Channelized	-	None	-	None	-	None
Storage Length	-	-	-	-	0	-
Veh in Median Storage, #	-	0	0	-	0	-
Grade, %	-	0	0	-	0	-
Peak Hour Factor	92	92	92	92	92	92
Heavy Vehicles, %	2	2	2	2	2	2
Mvmt Flow	0	11	18	18	11	0

Major/Minor	Major1		Major2		Minor2	
Conflicting Flow All	46	0	-	0	58	47
Stage 1	-	-	-	-	37	-
Stage 2	-	-	-	-	21	-
Critical Hdwy	4.12	-	-	-	6.42	6.22
Critical Hdwy Stg 1	-	-	-	-	5.42	-
Critical Hdwy Stg 2	-	-	-	-	5.42	-
Follow-up Hdwy	2.218	-	-	-	3.518	3.318
Pot Cap-1 Maneuver	1562	-	-	-	949	1022
Stage 1	-	-	-	-	985	-
Stage 2	-	-	-	-	1002	-
Platoon blocked, %		-	-	-		
Mov Cap-1 Maneuver	1547	-	-	-	930	1003
Mov Cap-2 Maneuver	-	-	-	-	930	-
Stage 1	-	-	-	-	975	-
Stage 2	-	-	-	-	992	-

Approach	EB	WB	SB
HCM Control Delay, s	0	0	8.9
HCM LOS			A

Minor Lane/Major Mvmt	EBL	EBT	WBT	WBR	SBLn1
Capacity (veh/h)	1547	-	-	-	930
HCM Lane V/C Ratio	-	-	-	-	0.012
HCM Control Delay (s)	0	-	-	-	8.9
HCM Lane LOS	A	-	-	-	A
HCM 95th %tile Q(veh)	0	-	-	-	0

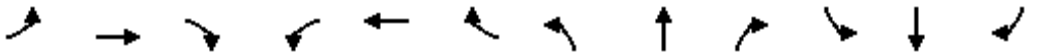

Movement	EBL	EBT	EBR	WBL	WBT	WBR	NBL	NBT	NBR	SBL	SBT	SBR
Lane Configurations												
Traffic Volume (veh/h)	100	35	46	49	45	101	61	260	20	141	305	121
Future Volume (veh/h)	100	35	46	49	45	101	61	260	20	141	305	121
Initial Q (Qb), veh	0	0	0	0	0	0	0	0	0	0	0	0
Ped-Bike Adj(A_pbT)	1.00		0.97	1.00		0.94	1.00		0.97	1.00		0.97
Parking Bus, Adj	1.00	1.00	1.00	1.00	1.00	1.00	1.00	1.00	1.00	1.00	1.00	1.00
Work Zone On Approach		No			No			No			No	
Adj Sat Flow, veh/h/ln	1870	1870	1870	1870	1870	1870	1870	1870	1870	1870	1870	1870
Adj Flow Rate, veh/h	135	47	62	73	67	151	72	306	24	148	321	127
Peak Hour Factor	0.74	0.74	0.74	0.67	0.67	0.67	0.85	0.85	0.85	0.95	0.95	0.95
Percent Heavy Veh, %	2	2	2	2	2	2	2	2	2	2	2	2
Cap, veh/h	263	424	347	214	373	296	232	434	34	244	647	250
Arrive On Green	0.15	0.23	0.23	0.12	0.20	0.20	0.13	0.25	0.25	0.14	0.26	0.26
Sat Flow, veh/h	1781	1870	1530	1781	1870	1486	1781	1707	134	1781	2480	958
Grp Volume(v), veh/h	135	47	62	73	67	151	72	0	330	148	228	220
Grp Sat Flow(s),veh/h/ln	1781	1870	1530	1781	1870	1486	1781	0	1841	1781	1777	1661
Q Serve(g_s), s	4.8	1.4	2.2	2.6	2.0	6.2	2.5	0.0	11.2	5.4	7.5	7.8
Cycle Q Clear(g_c), s	4.8	1.4	2.2	2.6	2.0	6.2	2.5	0.0	11.2	5.4	7.5	7.8
Prop In Lane	1.00		1.00	1.00		1.00	1.00		0.07	1.00		0.58
Lane Grp Cap(c), veh/h	263	424	347	214	373	296	232	0	468	244	463	433
V/C Ratio(X)	0.51	0.11	0.18	0.34	0.18	0.51	0.31	0.00	0.70	0.61	0.49	0.51
Avail Cap(c_a), veh/h	388	952	779	285	843	670	311	0	1017	466	1137	1062
HCM Platoon Ratio	1.00	1.00	1.00	1.00	1.00	1.00	1.00	1.00	1.00	1.00	1.00	1.00
Upstream Filter(I)	1.00	1.00	1.00	1.00	1.00	1.00	1.00	0.00	1.00	1.00	1.00	1.00
Uniform Delay (d), s/veh	27.0	21.1	21.4	27.8	22.9	24.5	27.1	0.0	23.3	28.0	21.6	21.7
Incr Delay (d2), s/veh	0.6	0.2	0.3	0.3	0.3	1.9	0.3	0.0	2.8	0.9	1.2	1.3
Initial Q Delay(d3),s/veh	0.0	0.0	0.0	0.0	0.0	0.0	0.0	0.0	0.0	0.0	0.0	0.0
%ile BackOfQ(50%),veh/ln	2.0	0.6	0.8	1.1	0.9	2.2	1.0	0.0	4.7	2.2	3.0	3.0
Unsig. Movement Delay, s/veh												
LnGrp Delay(d),s/veh	27.6	21.3	21.8	28.1	23.2	26.5	27.4	0.0	26.1	28.9	22.7	23.0
LnGrp LOS	C	C	C	C	C	C	C	A	C	C	C	C
Approach Vol, veh/h		244			291			402			596	
Approach Delay, s/veh		24.9			26.1			26.3			24.3	
Approach LOS		C			C			C			C	

Timer - Assigned Phs	1	2	3	4	5	6	7	8
Phs Duration (G+Y+Rc), s	13.4	23.5	12.3	19.6	13.0	23.9	14.2	17.7
Change Period (Y+Rc), s	4.0	6.0	4.0	4.0	4.0	6.0	4.0	4.0
Max Green Setting (Gmax), s	18.0	38.0	11.0	35.0	12.0	44.0	15.0	31.0
Max Q Clear Time (g_c+I1), s	7.4	13.2	4.6	4.2	4.5	9.8	6.8	8.2
Green Ext Time (p_c), s	0.1	2.7	0.0	0.6	0.0	4.2	0.1	1.3

Intersection Summary	
HCM 6th Ctrl Delay	25.3
HCM 6th LOS	C

Intersection	
Intersection Delay, s/veh	39.4
Intersection LOS	E

Movement	EBL	EBT	EBR	WBL	WBT	WBR	NBL	NBT	NBR	SBL	SBT	SBR
Lane Configurations												
Traffic Vol, veh/h	22	179	221	14	100	189	83	157	16	191	233	15
Future Vol, veh/h	22	179	221	14	100	189	83	157	16	191	233	15
Peak Hour Factor	0.83	0.83	0.83	0.90	0.90	0.90	0.89	0.89	0.89	0.91	0.91	0.91
Heavy Vehicles, %	2	2	2	2	2	2	2	2	2	2	2	2
Mvmt Flow	27	216	266	16	111	210	93	176	18	210	256	16
Number of Lanes	0	1	1	0	1	1	0	1	0	0	1	0

Approach	EB	WB	NB	SB
Opposing Approach	WB	EB	SB	NB
Opposing Lanes	2	2	1	1
Conflicting Approach Left	SB	NB	EB	WB
Conflicting Lanes Left	1	1	2	2
Conflicting Approach Right	NB	SB	WB	EB
Conflicting Lanes Right	1	1	2	2
HCM Control Delay	21.5	17.2	26.5	81.3
HCM LOS	C	C	D	F

Lane	NBLn1	EBLn1	EBLn2	WBLn1	WBLn2	SBLn1
Vol Left, %	32%	11%	0%	12%	0%	44%
Vol Thru, %	61%	89%	0%	88%	0%	53%
Vol Right, %	6%	0%	100%	0%	100%	3%
Sign Control	Stop	Stop	Stop	Stop	Stop	Stop
Traffic Vol by Lane	256	201	221	114	189	439
LT Vol	83	22	0	14	0	191
Through Vol	157	179	0	100	0	233
RT Vol	16	0	221	0	189	15
Lane Flow Rate	288	242	266	127	210	482
Geometry Grp	2	7	7	7	7	2
Degree of Util (X)	0.66	0.571	0.57	0.311	0.47	1.042
Departure Headway (Hd)	8.495	8.715	7.928	9.078	8.281	7.774
Convergence, Y/N	Yes	Yes	Yes	Yes	Yes	Yes
Cap	429	417	458	399	439	468
Service Time	6.495	6.415	5.628	6.778	5.981	5.774
HCM Lane V/C Ratio	0.671	0.58	0.581	0.318	0.478	1.03
HCM Control Delay	26.5	22.4	20.6	15.8	18.1	81.3
HCM Lane LOS	D	C	C	C	C	F
HCM 95th-tile Q	4.6	3.5	3.5	1.3	2.5	14.7

Intersection	
Int Delay, s/veh	1.6

Movement	EBL	EBT	EBR	WBL	WBT	WBR	NBL	NBT	NBR	SBL	SBT	SBR
Lane Configurations		↕			↕			↕			↕	
Traffic Vol, veh/h	3	306	15	5	249	8	7	4	1	6	3	2
Future Vol, veh/h	3	306	15	5	249	8	7	4	1	6	3	2
Conflicting Peds, #/hr	10	0	10	10	0	10	10	0	10	10	0	10
Sign Control	Free	Free	Free	Free	Free	Free	Stop	Stop	Stop	Stop	Stop	Stop
RT Channelized	-	-	None	-	-	None	-	-	None	-	-	None
Storage Length	-	-	-	-	-	-	-	-	-	-	-	-
Veh in Median Storage, #	-	0	-	-	0	-	-	0	-	-	0	-
Grade, %	-	0	-	-	0	-	-	0	-	-	0	-
Peak Hour Factor	85	85	85	87	87	87	50	50	50	25	25	25
Heavy Vehicles, %	2	2	2	2	2	2	2	2	2	2	2	2
Mvmt Flow	4	360	18	6	286	9	14	8	2	24	12	8

Major/Minor	Major1			Major2			Minor1			Minor2		
Conflicting Flow All	305	0	0	388	0	0	710	704	389	705	709	311
Stage 1	-	-	-	-	-	-	387	387	-	313	313	-
Stage 2	-	-	-	-	-	-	323	317	-	392	396	-
Critical Hdwy	4.12	-	-	4.12	-	-	7.12	6.52	6.22	7.12	6.52	6.22
Critical Hdwy Stg 1	-	-	-	-	-	-	6.12	5.52	-	6.12	5.52	-
Critical Hdwy Stg 2	-	-	-	-	-	-	6.12	5.52	-	6.12	5.52	-
Follow-up Hdwy	2.218	-	-	2.218	-	-	3.518	4.018	3.318	3.518	4.018	3.318
Pot Cap-1 Maneuver	1256	-	-	1170	-	-	348	361	659	351	359	729
Stage 1	-	-	-	-	-	-	637	610	-	698	657	-
Stage 2	-	-	-	-	-	-	689	654	-	633	604	-
Platoon blocked, %		-	-		-	-						
Mov Cap-1 Maneuver	1244	-	-	1159	-	-	326	350	647	335	348	715
Mov Cap-2 Maneuver	-	-	-	-	-	-	326	350	-	335	348	-
Stage 1	-	-	-	-	-	-	629	601	-	689	646	-
Stage 2	-	-	-	-	-	-	658	644	-	614	596	-

Approach	EB	WB	NB	SB
HCM Control Delay, s	0.1	0.2	16.1	15.9
HCM LOS			C	C

Minor Lane/Major Mvmt	NBLn1	EBL	EBT	EBR	WBL	WBT	WBR	SBLn1
Capacity (veh/h)	348	1244	-	-	1159	-	-	375
HCM Lane V/C Ratio	0.069	0.003	-	-	0.005	-	-	0.117
HCM Control Delay (s)	16.1	7.9	0	-	8.1	0	-	15.9
HCM Lane LOS	C	A	A	-	A	A	-	C
HCM 95th %tile Q(veh)	0.2	0	-	-	0	-	-	0.4

APPENDIX F

YEAR 2033 WITHOUT PROJECT INTERSECTION ANALYSIS WORKSHEETS

Movement	EBL	EBT	EBR	WBL	WBT	WBR	NBL	NBT	NBR	SBL	SBT	SBR
Lane Configurations												
Traffic Volume (veh/h)	107	227	198	93	236	61	130	775	84	92	548	99
Future Volume (veh/h)	107	227	198	93	236	61	130	775	84	92	548	99
Initial Q (Qb), veh	0	0	0	0	0	0	0	0	0	0	0	0
Ped-Bike Adj(A_pbT)	1.00		0.97	1.00		0.97	1.00		0.96	1.00		0.96
Parking Bus, Adj	1.00	1.00	1.00	1.00	1.00	1.00	1.00	1.00	1.00	1.00	1.00	1.00
Work Zone On Approach		No			No			No			No	
Adj Sat Flow, veh/h/ln	1870	1870	1870	1870	1870	1870	1870	1870	1870	1870	1870	1870
Adj Flow Rate, veh/h	151	320	279	145	369	95	167	994	108	135	806	146
Peak Hour Factor	0.71	0.71	0.71	0.64	0.64	0.64	0.78	0.78	0.78	0.68	0.68	0.68
Percent Heavy Veh, %	2	2	2	2	2	2	2	2	2	2	2	2
Cap, veh/h	177	433	354	171	427	349	193	1277	139	161	1129	205
Arrive On Green	0.10	0.23	0.23	0.10	0.23	0.23	0.11	0.40	0.40	0.09	0.38	0.38
Sat Flow, veh/h	1781	1870	1531	1781	1870	1530	1781	3217	349	1781	2982	540
Grp Volume(v), veh/h	151	320	279	145	369	95	167	549	553	135	480	472
Grp Sat Flow(s),veh/h/ln	1781	1870	1531	1781	1870	1530	1781	1777	1790	1781	1777	1745
Q Serve(g_s), s	10.2	19.4	20.9	9.8	23.1	6.2	11.3	32.9	32.9	9.1	28.1	28.1
Cycle Q Clear(g_c), s	10.2	19.4	20.9	9.8	23.1	6.2	11.3	32.9	32.9	9.1	28.1	28.1
Prop In Lane	1.00		1.00	1.00		1.00	1.00		0.20	1.00		0.31
Lane Grp Cap(c), veh/h	177	433	354	171	427	349	193	705	711	161	673	661
V/C Ratio(X)	0.85	0.74	0.79	0.85	0.87	0.27	0.86	0.78	0.78	0.84	0.71	0.71
Avail Cap(c_a), veh/h	201	497	407	197	492	403	216	705	711	181	673	661
HCM Platoon Ratio	1.00	1.00	1.00	1.00	1.00	1.00	1.00	1.00	1.00	1.00	1.00	1.00
Upstream Filter(I)	1.00	1.00	1.00	0.53	0.53	0.53	0.55	0.55	0.55	1.00	1.00	1.00
Uniform Delay (d), s/veh	54.1	43.5	44.1	54.3	45.3	38.8	53.5	32.1	32.1	54.6	32.3	32.3
Incr Delay (d2), s/veh	23.4	3.9	7.4	13.3	7.0	0.1	15.2	4.7	4.7	23.6	6.4	6.5
Initial Q Delay(d3),s/veh	0.0	0.0	0.0	0.0	0.0	0.0	0.0	0.0	0.0	0.0	0.0	0.0
%ile BackOfQ(50%),veh/ln	5.7	9.3	8.5	5.0	11.4	2.3	5.8	14.9	15.0	5.1	13.1	12.9
Unsig. Movement Delay, s/veh												
LnGrp Delay(d),s/veh	77.4	47.4	51.4	67.6	52.2	38.8	68.7	36.8	36.8	78.2	38.6	38.7
LnGrp LOS	E	D	D	E	D	D	E	D	D	E	D	D
Approach Vol, veh/h		750			609			1269			1087	
Approach Delay, s/veh		55.0			53.8			41.0			43.6	
Approach LOS		D			D			D			D	

Timer - Assigned Phs	1	2	3	4	5	6	7	8
Phs Duration (G+Y+Rc), s	16.6	54.1	17.3	33.9	18.8	51.9	17.7	33.5
Change Period (Y+Rc), s	5.6	5.7	5.6	5.7	5.6	5.7	5.6	5.7
Max Green Setting (Gmax), s	12.4	41.1	13.5	32.4	14.8	38.7	13.8	32.1
Max Q Clear Time (g_c+I1), s	11.1	34.9	11.8	22.9	13.3	30.1	12.2	25.1
Green Ext Time (p_c), s	0.0	2.7	0.0	1.3	0.0	2.9	0.0	0.9

Intersection Summary	
HCM 6th Ctrl Delay	46.7
HCM 6th LOS	D



Movement	EBL	EBT	EBR	WBL	WBT	WBR	NBL	NBT	NBR	SBL	SBT	SBR
Lane Configurations												
Traffic Volume (veh/h)	77	248	82	20	256	18	133	598	27	67	389	89
Future Volume (veh/h)	77	248	82	20	256	18	133	598	27	67	389	89
Initial Q (Qb), veh	0	0	0	0	0	0	0	0	0	0	0	0
Ped-Bike Adj(A_pbT)	1.00		0.98	0.99		0.97	1.00		0.95	1.00		0.95
Parking Bus, Adj	1.00	1.00	1.00	1.00	1.00	1.00	1.00	1.00	1.00	1.00	1.00	1.00
Work Zone On Approach		No			No			No			No	
Adj Sat Flow, veh/h/ln	1870	1870	1870	1870	1870	1870	1870	1870	1870	1870	1870	1870
Adj Flow Rate, veh/h	113	365	121	29	366	26	177	797	36	100	581	133
Peak Hour Factor	0.68	0.68	0.68	0.70	0.70	0.70	0.75	0.75	0.75	0.67	0.67	0.67
Percent Heavy Veh, %	2	2	2	2	2	2	2	2	2	2	2	2
Cap, veh/h	208	592	196	68	447	31	220	1110	50	130	769	175
Arrive On Green	0.12	0.44	0.44	0.28	0.28	0.28	0.12	0.32	0.32	0.07	0.27	0.27
Sat Flow, veh/h	1781	1335	443	67	1598	110	1781	3454	156	1781	2841	648
Grp Volume(v), veh/h	113	0	486	421	0	0	177	410	423	100	363	351
Grp Sat Flow(s),veh/h/ln	1781	0	1778	1775	0	0	1781	1777	1833	1781	1777	1712
Q Serve(g_s), s	4.7	0.0	16.4	7.9	0.0	0.0	7.6	15.9	15.9	4.3	14.6	14.7
Cycle Q Clear(g_c), s	4.7	0.0	16.4	17.4	0.0	0.0	7.6	15.9	15.9	4.3	14.6	14.7
Prop In Lane	1.00		0.25	0.07		0.06	1.00		0.09	1.00		0.38
Lane Grp Cap(c), veh/h	208	0	789	545	0	0	220	571	589	130	481	463
V/C Ratio(X)	0.54	0.00	0.62	0.77	0.00	0.00	0.81	0.72	0.72	0.77	0.75	0.76
Avail Cap(c_a), veh/h	303	0	1261	911	0	0	416	888	916	289	760	733
HCM Platoon Ratio	1.00	1.00	1.00	1.00	1.00	1.00	1.00	1.00	1.00	1.00	1.00	1.00
Upstream Filter(I)	1.00	0.00	1.00	1.00	0.00	0.00	1.00	1.00	1.00	1.00	1.00	1.00
Uniform Delay (d), s/veh	32.6	0.0	16.7	26.4	0.0	0.0	33.4	23.4	23.4	35.7	26.2	26.2
Incr Delay (d2), s/veh	2.2	0.0	0.8	2.4	0.0	0.0	6.8	1.7	1.7	9.3	2.4	2.6
Initial Q Delay(d3),s/veh	0.0	0.0	0.0	0.0	0.0	0.0	0.0	0.0	0.0	0.0	0.0	0.0
%ile BackOfQ(50%),veh/ln	2.1	0.0	6.2	7.2	0.0	0.0	3.6	6.6	6.8	2.2	6.2	6.1
Unsig. Movement Delay, s/veh												
LnGrp Delay(d),s/veh	34.8	0.0	17.5	28.8	0.0	0.0	40.2	25.1	25.1	45.0	28.6	28.8
LnGrp LOS	C	A	B	C	A	A	D	C	C	D	C	C
Approach Vol, veh/h		599			421			1010			814	
Approach Delay, s/veh		20.7			28.8			27.8			30.7	
Approach LOS		C			C			C			C	

Timer - Assigned Phs	1	2		4	5	6	7	8
Phs Duration (G+Y+Rc), s	9.4	29.7		39.2	13.4	25.7	12.8	26.4
Change Period (Y+Rc), s	3.7	4.5		4.5	3.7	4.5	3.7	4.5
Max Green Setting (Gmax), s	12.7	39.1		55.5	18.3	33.5	13.3	38.5
Max Q Clear Time (g_c+I1), s	6.3	17.9		18.4	9.6	16.7	6.7	19.4
Green Ext Time (p_c), s	0.1	5.4		3.4	0.3	4.2	0.1	2.5

Intersection Summary	
HCM 6th Ctrl Delay	27.3
HCM 6th LOS	C



Movement	EBL	EBT	EBR	WBL	WBT	WBR	NBL	NBT	NBR	SBL	SBT	SBR
Lane Configurations												
Traffic Volume (veh/h)	43	188	68	82	134	196	36	587	90	115	465	15
Future Volume (veh/h)	43	188	68	82	134	196	36	587	90	115	465	15
Initial Q (Qb), veh	0	0	0	0	0	0	0	0	0	0	0	0
Ped-Bike Adj(A_pbT)	1.00		0.97	1.00		0.96	1.00		0.95	1.00		0.95
Parking Bus, Adj	1.00	1.00	1.00	1.00	1.00	1.00	1.00	1.00	1.00	1.00	1.00	1.00
Work Zone On Approach		No			No			No			No	
Adj Sat Flow, veh/h/ln	1870	1870	1870	1870	1870	1870	1870	1870	1870	1870	1870	1870
Adj Flow Rate, veh/h	55	241	87	100	163	239	41	667	102	139	560	18
Peak Hour Factor	0.78	0.78	0.78	0.82	0.82	0.82	0.88	0.88	0.88	0.83	0.83	0.83
Percent Heavy Veh, %	2	2	2	2	2	2	2	2	2	2	2	2
Cap, veh/h	63	275	99	140	228	306	65	835	127	165	1152	37
Arrive On Green	0.25	0.25	0.25	0.20	0.20	0.20	0.04	0.27	0.27	0.09	0.33	0.33
Sat Flow, veh/h	254	1113	402	698	1138	1526	1781	3065	468	1781	3508	113
Grp Volume(v), veh/h	383	0	0	263	0	239	41	386	383	139	283	295
Grp Sat Flow(s),veh/h/ln	1769	0	0	1835	0	1526	1781	1777	1756	1781	1777	1844
Q Serve(g_s), s	25.8	0.0	0.0	16.6	0.0	18.4	2.8	25.1	25.2	9.5	15.8	15.9
Cycle Q Clear(g_c), s	25.8	0.0	0.0	16.6	0.0	18.4	2.8	25.1	25.2	9.5	15.8	15.9
Prop In Lane	0.14		0.23	0.38		1.00	1.00		0.27	1.00		0.06
Lane Grp Cap(c), veh/h	436	0	0	368	0	306	65	484	478	165	584	605
V/C Ratio(X)	0.88	0.00	0.00	0.71	0.00	0.78	0.63	0.80	0.80	0.84	0.49	0.49
Avail Cap(c_a), veh/h	528	0	0	547	0	455	128	535	529	220	627	651
HCM Platoon Ratio	1.00	1.00	1.00	1.00	1.00	1.00	1.00	1.00	1.00	1.00	1.00	1.00
Upstream Filter(I)	1.00	0.00	0.00	1.00	0.00	1.00	1.00	1.00	1.00	1.00	1.00	1.00
Uniform Delay (d), s/veh	45.0	0.0	0.0	46.3	0.0	47.0	58.9	42.0	42.0	55.4	33.3	33.3
Incr Delay (d2), s/veh	13.6	0.0	0.0	2.6	0.0	5.1	3.7	11.5	11.7	15.6	2.3	2.2
Initial Q Delay(d3),s/veh	0.0	0.0	0.0	0.0	0.0	0.0	0.0	0.0	0.0	0.0	0.0	0.0
%ile BackOfQ(50%),veh/ln	12.8	0.0	0.0	7.8	0.0	7.4	1.3	12.3	12.2	4.9	7.0	7.3
Unsig. Movement Delay, s/veh												
LnGrp Delay(d),s/veh	58.5	0.0	0.0	48.9	0.0	52.1	62.6	53.5	53.8	71.0	35.6	35.5
LnGrp LOS	E	A	A	D	A	D	E	D	D	E	D	D
Approach Vol, veh/h		383			502			810			717	
Approach Delay, s/veh		58.5			50.4			54.1			42.4	
Approach LOS		E			D			D			D	

Timer - Assigned Phs	1	2		4	5	6		8
Phs Duration (G+Y+Rc), s	10.2	46.2		31.0	17.2	39.2		36.7
Change Period (Y+Rc), s	* 5.7	5.4		6.1	* 5.7	5.4		6.1
Max Green Setting (Gmax), s	* 8.3	43.8		37.0	* 15	37.4		37.0
Max Q Clear Time (g_c+I1), s	14.8	17.9		20.4	11.5	27.2		27.8
Green Ext Time (p_c), s	0.0	8.4		2.2	0.1	6.1		1.5

Intersection Summary	
HCM 6th Ctrl Delay	50.5
HCM 6th LOS	D

Notes

* HCM 6th computational engine requires equal clearance times for the phases crossing the barrier.



Movement	EBL	EBT	EBR	WBL	WBT	WBR	NBL	NBT	NBR	SBL	SBT	SBR
Lane Configurations												
Traffic Volume (veh/h)	62	88	90	35	137	55	118	405	66	27	333	58
Future Volume (veh/h)	62	88	90	35	137	55	118	405	66	27	333	58
Initial Q (Qb), veh	0	0	0	0	0	0	0	0	0	0	0	0
Ped-Bike Adj(A_pbT)	1.00		0.91	1.00		0.94	1.00		0.96	1.00		0.95
Parking Bus, Adj	1.00	1.00	1.00	1.00	1.00	1.00	1.00	1.00	1.00	1.00	1.00	1.00
Work Zone On Approach		No			No			No			No	
Adj Sat Flow, veh/h/ln	1870	1870	1870	1870	1870	1870	1870	1870	1870	1870	1870	1870
Adj Flow Rate, veh/h	71	101	103	42	165	66	139	476	78	35	432	75
Peak Hour Factor	0.87	0.87	0.87	0.83	0.83	0.83	0.85	0.85	0.85	0.77	0.77	0.77
Percent Heavy Veh, %	2	2	2	2	2	2	2	2	2	2	2	2
Cap, veh/h	93	132	177	54	211	84	174	533	87	61	522	420
Arrive On Green	0.12	0.12	0.12	0.20	0.20	0.20	0.10	0.34	0.34	0.03	0.28	0.28
Sat Flow, veh/h	756	1076	1444	269	1056	422	1781	1555	255	1781	1870	1505
Grp Volume(v), veh/h	172	0	103	273	0	0	139	0	554	35	432	75
Grp Sat Flow(s),veh/h/ln	1833	0	1444	1748	0	0	1781	0	1810	1781	1870	1505
Q Serve(g_s), s	7.0	0.0	5.2	11.4	0.0	0.0	5.9	0.0	22.4	1.5	16.7	2.9
Cycle Q Clear(g_c), s	7.0	0.0	5.2	11.4	0.0	0.0	5.9	0.0	22.4	1.5	16.7	2.9
Prop In Lane	0.41		1.00	0.15		0.24	1.00		0.14	1.00		1.00
Lane Grp Cap(c), veh/h	225	0	177	349	0	0	174	0	620	61	522	420
V/C Ratio(X)	0.76	0.00	0.58	0.78	0.00	0.00	0.80	0.00	0.89	0.57	0.83	0.18
Avail Cap(c_a), veh/h	406	0	320	591	0	0	332	0	1131	125	950	764
HCM Platoon Ratio	1.00	1.00	1.00	1.00	1.00	1.00	1.00	1.00	1.00	1.00	1.00	1.00
Upstream Filter(I)	1.00	0.00	1.00	1.00	0.00	0.00	1.00	0.00	1.00	1.00	1.00	1.00
Uniform Delay (d), s/veh	32.8	0.0	32.0	29.3	0.0	0.0	34.1	0.0	24.0	36.7	26.1	21.1
Incr Delay (d2), s/veh	2.0	0.0	1.1	1.5	0.0	0.0	3.2	0.0	1.9	3.1	1.3	0.1
Initial Q Delay(d3),s/veh	0.0	0.0	0.0	0.0	0.0	0.0	0.0	0.0	0.0	0.0	0.0	0.0
%ile BackOfQ(50%),veh/ln	3.1	0.0	1.8	4.7	0.0	0.0	2.5	0.0	8.7	0.7	6.9	0.9
Unsig. Movement Delay, s/veh												
LnGrp Delay(d),s/veh	34.8	0.0	33.1	30.7	0.0	0.0	37.3	0.0	25.9	39.9	27.4	21.2
LnGrp LOS	C	A	C	C	A	A	D	A	C	D	C	C
Approach Vol, veh/h		275			273			693			542	
Approach Delay, s/veh		34.2			30.7			28.2			27.3	
Approach LOS		C			C			C			C	

Timer - Assigned Phs	1	2		4	5	6		8
Phs Duration (G+Y+Rc), s	8.2	32.2		15.4	13.1	27.4		21.3
Change Period (Y+Rc), s	5.6	5.8		5.9	5.6	5.8		5.9
Max Green Setting (Gmax), s	5.4	48.2		17.1	14.4	39.2		26.1
Max Q Clear Time (g_c+I1), s	3.5	24.4		9.0	7.9	18.7		13.4
Green Ext Time (p_c), s	0.0	2.1		0.5	0.0	1.5		0.8

Intersection Summary		
HCM 6th Ctrl Delay		29.2
HCM 6th LOS		C

Intersection	
Intersection Delay, s/veh	97.2
Intersection LOS	F

Movement	EBL	EBT	EBR	WBL	WBT	WBR	NBL	NBT	NBR	SBL	SBT	SBR
Lane Configurations												
Traffic Vol, veh/h	55	158	84	45	118	89	110	579	67	82	360	31
Future Vol, veh/h	55	158	84	45	118	89	110	579	67	82	360	31
Peak Hour Factor	0.73	0.73	0.73	0.74	0.74	0.74	0.78	0.78	0.78	0.66	0.66	0.66
Heavy Vehicles, %	2	2	2	2	2	2	2	2	2	2	2	2
Mvmt Flow	75	216	115	61	159	120	141	742	86	124	545	47
Number of Lanes	0	1	0	0	1	0	1	2	0	1	2	0

Approach	EB	WB	NB	SB
Opposing Approach	WB	EB	SB	NB
Opposing Lanes	1	1	3	3
Conflicting Approach Left	SB	NB	EB	WB
Conflicting Lanes Left	3	3	1	1
Conflicting Approach Right	NB	SB	WB	EB
Conflicting Lanes Right	3	3	1	1
HCM Control Delay	133.6	77.3	122.3	52
HCM LOS	F	F	F	F

Lane	NBLn1	NBLn2	NBLn3	EBLn1	WBLn1	SBLn1	SBLn2	SBLn3
Vol Left, %	100%	0%	0%	19%	18%	100%	0%	0%
Vol Thru, %	0%	100%	74%	53%	47%	0%	100%	79%
Vol Right, %	0%	0%	26%	28%	35%	0%	0%	21%
Sign Control	Stop	Stop	Stop	Stop	Stop	Stop	Stop	Stop
Traffic Vol by Lane	110	386	260	297	252	82	240	151
LT Vol	110	0	0	55	45	82	0	0
Through Vol	0	386	193	158	118	0	240	120
RT Vol	0	0	67	84	89	0	0	31
Lane Flow Rate	141	495	333	407	341	124	364	229
Geometry Grp	7	7	7	7	7	7	7	7
Degree of Util (X)	0.399	1.332	0.88	1.162	0.97	0.354	0.985	0.61
Departure Headway (Hd)	10.94	10.402	10.208	10.84	11.173	11.043	10.505	10.351
Convergence, Y/N	Yes	Yes	Yes	Yes	Yes	Yes	Yes	Yes
Cap	331	351	357	338	327	328	349	352
Service Time	8.64	8.102	7.908	8.54	8.873	8.743	8.205	8.051
HCM Lane V/C Ratio	0.426	1.41	0.933	1.204	1.043	0.378	1.043	0.651
HCM Control Delay	20.7	196.5	55	133.6	77.3	19.7	78.2	28
HCM Lane LOS	C	F	F	F	F	C	F	D
HCM 95th-tile Q	1.9	22.2	8.5	15.9	10.2	1.6	10.9	3.8



Movement	EBL	EBT	EBR	WBL	WBT	WBR	NBL	NBT	NBR	SBL	SBT	SBR
Lane Configurations												
Traffic Volume (veh/h)	106	81	150	61	84	20	69	585	29	12	515	34
Future Volume (veh/h)	106	81	150	61	84	20	69	585	29	12	515	34
Initial Q (Qb), veh	0	0	0	0	0	0	0	0	0	0	0	0
Ped-Bike Adj(A_pbT)	1.00		0.96	1.00		0.96	1.00		0.96	1.00		0.95
Parking Bus, Adj	1.00	1.00	1.00	1.00	1.00	1.00	1.00	1.00	1.00	1.00	1.00	1.00
Work Zone On Approach		No			No			No			No	
Adj Sat Flow, veh/h/ln	1870	1870	1870	1870	1870	1870	1870	1870	1870	1870	1870	1870
Adj Flow Rate, veh/h	129	99	183	95	131	31	82	696	35	14	620	41
Peak Hour Factor	0.82	0.82	0.82	0.64	0.64	0.64	0.84	0.84	0.84	0.83	0.83	0.83
Percent Heavy Veh, %	2	2	2	2	2	2	2	2	2	2	2	2
Cap, veh/h	173	133	255	129	177	42	135	1216	61	48	1030	68
Arrive On Green	0.17	0.17	0.17	0.19	0.19	0.19	0.08	0.35	0.35	0.03	0.31	0.31
Sat Flow, veh/h	1029	790	1518	661	912	216	1781	3434	173	1781	3371	223
Grp Volume(v), veh/h	228	0	183	257	0	0	82	360	371	14	326	335
Grp Sat Flow(s),veh/h/ln	1819	0	1518	1788	0	0	1781	1777	1830	1781	1777	1817
Q Serve(g_s), s	9.1	0.0	8.7	10.3	0.0	0.0	3.4	12.5	12.5	0.6	11.9	11.9
Cycle Q Clear(g_c), s	9.1	0.0	8.7	10.3	0.0	0.0	3.4	12.5	12.5	0.6	11.9	11.9
Prop In Lane	0.57		1.00	0.37		0.12	1.00		0.09	1.00		0.12
Lane Grp Cap(c), veh/h	305	0	255	348	0	0	135	629	648	48	543	555
V/C Ratio(X)	0.75	0.00	0.72	0.74	0.00	0.00	0.61	0.57	0.57	0.29	0.60	0.60
Avail Cap(c_a), veh/h	605	0	505	665	0	0	288	902	928	194	808	826
HCM Platoon Ratio	1.00	1.00	1.00	1.00	1.00	1.00	1.00	1.00	1.00	1.00	1.00	1.00
Upstream Filter(I)	1.00	0.00	1.00	1.00	0.00	0.00	1.00	1.00	1.00	1.00	1.00	1.00
Uniform Delay (d), s/veh	30.1	0.0	29.9	28.8	0.0	0.0	34.1	19.9	19.9	36.3	22.5	22.5
Incr Delay (d2), s/veh	3.6	0.0	3.8	3.1	0.0	0.0	1.6	3.0	2.9	1.2	3.9	3.8
Initial Q Delay(d3),s/veh	0.0	0.0	0.0	0.0	0.0	0.0	0.0	0.0	0.0	0.0	0.0	0.0
%ile BackOfQ(50%),veh/ln	4.1	0.0	3.3	4.5	0.0	0.0	1.5	5.2	5.3	0.3	5.1	5.2
Unsig. Movement Delay, s/veh												
LnGrp Delay(d),s/veh	33.7	0.0	33.7	31.9	0.0	0.0	35.7	22.9	22.8	37.5	26.3	26.3
LnGrp LOS	C	A	C	C	A	A	D	C	C	D	C	C
Approach Vol, veh/h		411			257			813			675	
Approach Delay, s/veh		33.7			31.9			24.1			26.5	
Approach LOS		C			C			C			C	

Timer - Assigned Phs	1	2		4	5	6		8
Phs Duration (G+Y+Rc), s	10.5	28.6		19.5	6.7	32.3		17.5
Change Period (Y+Rc), s	* 4.7	5.4		* 4.7	* 4.7	5.4		4.7
Max Green Setting (Gmax), s	* 12	34.6		* 28	* 8.3	38.6		25.3
Max Q Clear Time (g_c+I1), s	5.4	13.9		12.3	2.6	14.5		11.1
Green Ext Time (p_c), s	0.0	8.6		1.3	0.0	10.5		1.7

Intersection Summary	
HCM 6th Ctrl Delay	27.6
HCM 6th LOS	C

Notes

* HCM 6th computational engine requires equal clearance times for the phases crossing the barrier.



Movement	EBL	EBT	EBR	WBL	WBT	WBR	NBL	NBT	NBR	SBL	SBT	SBR
Lane Configurations												
Traffic Volume (veh/h)	169	124	332	46	115	57	246	766	48	30	489	97
Future Volume (veh/h)	169	124	332	46	115	57	246	766	48	30	489	97
Initial Q (Qb), veh	0	0	0	0	0	0	0	0	0	0	0	0
Ped-Bike Adj(A_pbT)	1.00		0.98	0.99		0.96	1.00		0.96	1.00		0.97
Parking Bus, Adj	1.00	1.00	1.00	1.00	1.00	1.00	1.00	1.00	1.00	1.00	1.00	1.00
Work Zone On Approach		No			No			No			No	
Adj Sat Flow, veh/h/ln	1870	1870	1870	1870	1870	1870	1870	1870	1870	1870	1870	1870
Adj Flow Rate, veh/h	235	172	461	54	135	67	328	1021	64	42	679	135
Peak Hour Factor	0.72	0.72	0.72	0.85	0.85	0.85	0.75	0.75	0.75	0.72	0.72	0.72
Percent Heavy Veh, %	2	2	2	2	2	2	2	2	2	2	2	2
Cap, veh/h	238	752	621	89	187	84	330	1376	86	58	746	148
Arrive On Green	0.13	0.40	0.40	0.22	0.22	0.22	0.19	0.41	0.41	0.03	0.25	0.25
Sat Flow, veh/h	1781	1870	1546	227	860	386	1781	3386	212	1781	2936	583
Grp Volume(v), veh/h	235	172	461	256	0	0	328	536	549	42	411	403
Grp Sat Flow(s),veh/h/ln	1781	1870	1546	1473	0	0	1781	1777	1821	1781	1777	1743
Q Serve(g_s), s	14.5	6.7	28.0	12.3	0.0	0.0	20.3	28.2	28.2	2.6	24.7	24.8
Cycle Q Clear(g_c), s	14.5	6.7	28.0	17.7	0.0	0.0	20.3	28.2	28.2	2.6	24.7	24.8
Prop In Lane	1.00		1.00	0.21		0.26	1.00		0.12	1.00		0.33
Lane Grp Cap(c), veh/h	238	752	621	360	0	0	330	722	740	58	452	443
V/C Ratio(X)	0.99	0.23	0.74	0.71	0.00	0.00	0.99	0.74	0.74	0.72	0.91	0.91
Avail Cap(c_a), veh/h	238	905	748	474	0	0	330	722	740	82	465	456
HCM Platoon Ratio	1.00	1.00	1.00	1.00	1.00	1.00	1.00	1.00	1.00	1.00	1.00	1.00
Upstream Filter(I)	1.00	1.00	1.00	1.00	0.00	0.00	1.00	1.00	1.00	1.00	1.00	1.00
Uniform Delay (d), s/veh	47.6	21.7	28.1	40.2	0.0	0.0	44.8	27.8	27.8	52.8	39.9	39.9
Incr Delay (d2), s/veh	54.9	0.1	2.4	1.9	0.0	0.0	47.9	4.4	4.3	7.2	21.8	22.4
Initial Q Delay(d3),s/veh	0.0	0.0	0.0	0.0	0.0	0.0	0.0	0.0	0.0	0.0	0.0	0.0
%ile BackOfQ(50%),veh/ln	10.0	2.9	10.5	6.7	0.0	0.0	13.3	12.6	12.9	1.3	13.4	13.2
Unsig. Movement Delay, s/veh												
LnGrp Delay(d),s/veh	102.6	21.8	30.5	42.1	0.0	0.0	92.8	32.2	32.1	60.0	61.7	62.3
LnGrp LOS	F	C	C	D	A	A	F	C	C	E	E	E
Approach Vol, veh/h		868			256			1413			856	
Approach Delay, s/veh		48.3			42.1			46.2			61.9	
Approach LOS		D			D			D			E	

Timer - Assigned Phs	1	2		4	5	6	7	8
Phs Duration (G+Y+Rc), s	9.2	50.5		50.5	26.0	33.7	20.3	30.2
Change Period (Y+Rc), s	5.6	5.7		6.2	5.6	5.7	5.6	6.2
Max Green Setting (Gmax), s	5.1	44.1		53.3	20.4	28.8	14.7	33.0
Max Q Clear Time (g_c+I1), s	4.6	30.2		30.0	22.3	26.8	16.5	19.7
Green Ext Time (p_c), s	0.0	7.9		1.5	0.0	1.2	0.0	1.0

Intersection Summary		
HCM 6th Ctrl Delay		50.4
HCM 6th LOS		D



Movement	EBL	EBT	EBR	WBL	WBT	WBR	NBL	NBT	NBR	SBL	SBT	SBR
Lane Configurations												
Traffic Volume (veh/h)	0	0	0	223	1	319	150	535	0	0	738	100
Future Volume (veh/h)	0	0	0	223	1	319	150	535	0	0	738	100
Initial Q (Qb), veh				0	0	0	0	0	0	0	0	0
Ped-Bike Adj(A_pbT)				1.00		0.97	1.00		1.00	1.00		0.96
Parking Bus, Adj				1.00	1.00	1.00	1.00	1.00	1.00	1.00	1.00	1.00
Work Zone On Approach					No			No			No	
Adj Sat Flow, veh/h/ln				1870	1870	1870	1870	1870	0	0	1870	1870
Adj Flow Rate, veh/h				286	1	409	160	569	0	0	858	116
Peak Hour Factor				0.78	0.78	0.78	0.94	0.94	0.94	0.86	0.86	0.86
Percent Heavy Veh, %				2	2	2	2	2	0	0	2	2
Cap, veh/h				560	2	486	195	2017	0	0	1269	172
Arrive On Green				0.32	0.32	0.32	0.11	0.57	0.00	0.00	0.41	0.41
Sat Flow, veh/h				1775	6	1540	1781	3647	0	0	3220	423
Grp Volume(v), veh/h				287	0	409	160	569	0	0	488	486
Grp Sat Flow(s),veh/h/ln				1782	0	1540	1781	1777	0	0	1777	1773
Q Serve(g_s), s				11.8	0.0	22.3	7.9	7.4	0.0	0.0	20.2	20.2
Cycle Q Clear(g_c), s				11.8	0.0	22.3	7.9	7.4	0.0	0.0	20.2	20.2
Prop In Lane				1.00		1.00	1.00		0.00	0.00		0.24
Lane Grp Cap(c), veh/h				562	0	486	195	2017	0	0	721	720
V/C Ratio(X)				0.51	0.00	0.84	0.82	0.28	0.00	0.00	0.68	0.68
Avail Cap(c_a), veh/h				770	0	666	382	2787	0	0	920	918
HCM Platoon Ratio				1.00	1.00	1.00	1.00	1.00	1.00	1.00	1.00	1.00
Upstream Filter(I)				1.00	0.00	1.00	1.00	1.00	0.00	0.00	1.00	1.00
Uniform Delay (d), s/veh				25.1	0.0	28.7	39.2	10.0	0.0	0.0	21.9	21.9
Incr Delay (d2), s/veh				0.7	0.0	7.1	3.2	0.3	0.0	0.0	4.0	4.1
Initial Q Delay(d3),s/veh				0.0	0.0	0.0	0.0	0.0	0.0	0.0	0.0	0.0
%ile BackOfQ(50%),veh/ln				5.0	0.0	8.9	3.5	2.6	0.0	0.0	8.5	8.5
Unsig. Movement Delay, s/veh												
LnGrp Delay(d),s/veh				25.8	0.0	35.8	42.5	10.3	0.0	0.0	25.9	25.9
LnGrp LOS				C	A	D	D	B	A	A	C	C
Approach Vol, veh/h					696			729			974	
Approach Delay, s/veh					31.7			17.3			25.9	
Approach LOS					C			B			C	

Timer - Assigned Phs	1	2		4		6						
Phs Duration (G+Y+Rc), s	14.6	41.9		33.5		56.5						
Change Period (Y+Rc), s	4.7	5.4		5.1		5.4						
Max Green Setting (Gmax), s	13.3	46.6		38.9		70.6						
Max Q Clear Time (g_c+I1), s	9.9	22.2		24.3		9.4						
Green Ext Time (p_c), s	0.1	14.3		3.0		11.3						

Intersection Summary	
HCM 6th Ctrl Delay	25.0
HCM 6th LOS	C

Notes

* HCM 6th computational engine requires equal clearance times for the phases crossing the barrier.



Movement	EBL	EBT	EBR	WBL	WBT	WBR	NBL	NBT	NBR	SBL	SBT	SBR
Lane Configurations												
Traffic Volume (veh/h)	77	1	222	0	0	0	0	608	162	246	715	0
Future Volume (veh/h)	77	1	222	0	0	0	0	608	162	246	715	0
Initial Q (Qb), veh	0	0	0				0	0	0	0	0	0
Ped-Bike Adj(A_pbT)	1.00		0.97				1.00		0.95	1.00		1.00
Parking Bus, Adj	1.00	1.00	1.00				1.00	1.00	1.00	1.00	1.00	1.00
Work Zone On Approach		No						No			No	
Adj Sat Flow, veh/h/ln	1870	1870	1870				0	1870	1870	1870	1870	0
Adj Flow Rate, veh/h	128	2	370				0	683	182	283	822	0
Peak Hour Factor	0.60	0.60	0.60				0.89	0.89	0.89	0.87	0.87	0.87
Percent Heavy Veh, %	2	2	2				0	2	2	2	2	0
Cap, veh/h	145	2	419				0	1034	439	323	1869	0
Arrive On Green	0.35	0.35	0.35				0.00	0.29	0.29	0.18	0.53	0.00
Sat Flow, veh/h	409	6	1183				0	3647	1507	1781	3647	0
Grp Volume(v), veh/h	500	0	0				0	683	182	283	822	0
Grp Sat Flow(s),veh/h/ln	1599	0	0				0	1777	1507	1781	1777	0
Q Serve(g_s), s	25.7	0.0	0.0				0.0	14.8	8.5	13.5	12.5	0.0
Cycle Q Clear(g_c), s	25.7	0.0	0.0				0.0	14.8	8.5	13.5	12.5	0.0
Prop In Lane	0.26		0.74				0.00		1.00	1.00		0.00
Lane Grp Cap(c), veh/h	566	0	0				0	1034	439	323	1869	0
V/C Ratio(X)	0.88	0.00	0.00				0.00	0.66	0.41	0.88	0.44	0.00
Avail Cap(c_a), veh/h	804	0	0				0	1279	542	596	2660	0
HCM Platoon Ratio	1.00	1.00	1.00				1.00	1.00	1.00	1.00	1.00	1.00
Upstream Filter(I)	1.00	0.00	0.00				0.00	1.00	1.00	1.00	1.00	0.00
Uniform Delay (d), s/veh	26.6	0.0	0.0				0.0	27.2	25.0	34.9	12.8	0.0
Incr Delay (d2), s/veh	8.4	0.0	0.0				0.0	2.7	2.3	3.0	0.6	0.0
Initial Q Delay(d3),s/veh	0.0	0.0	0.0				0.0	0.0	0.0	0.0	0.0	0.0
%ile BackOfQ(50%),veh/ln	10.7	0.0	0.0				0.0	6.3	3.1	5.8	4.5	0.0
Unsig. Movement Delay, s/veh												
LnGrp Delay(d),s/veh	35.0	0.0	0.0				0.0	29.9	27.3	37.9	13.4	0.0
LnGrp LOS	C	A	A				A	C	C	D	B	A
Approach Vol, veh/h		500						865			1105	
Approach Delay, s/veh		35.0						29.3			19.7	
Approach LOS		C						C			B	

Timer - Assigned Phs		2			5	6		8				
Phs Duration (G+Y+Rc), s		51.4			20.5	30.9		36.1				
Change Period (Y+Rc), s		5.4			* 4.7	5.4		5.1				
Max Green Setting (Gmax), s		65.5			* 29	31.5		44.0				
Max Q Clear Time (g_c+I1), s		14.5			15.5	16.8		27.7				
Green Ext Time (p_c), s		17.7			0.3	8.7		3.3				

Intersection Summary												
HCM 6th Ctrl Delay			26.2									
HCM 6th LOS			C									

Notes

* HCM 6th computational engine requires equal clearance times for the phases crossing the barrier.



Movement	EBL	EBT	EBR	WBL	WBT	WBR	NBL	NBT	NBR	SBL	SBT	SBR
Lane Configurations												
Traffic Volume (veh/h)	0	0	0	94	2	129	0	476	165	0	365	87
Future Volume (veh/h)	0	0	0	94	2	129	0	476	165	0	365	87
Initial Q (Qb), veh				0	0	0	0	0	0	0	0	0
Ped-Bike Adj(A_pbT)				1.00		0.97	1.00		0.96	1.00		0.96
Parking Bus, Adj				1.00	1.00	1.00	1.00	1.00	1.00	1.00	1.00	1.00
Work Zone On Approach					No			No			No	
Adj Sat Flow, veh/h/ln				1870	1870	1870	0	1870	1870	0	1870	1870
Adj Flow Rate, veh/h				127	3	174	0	553	192	0	440	105
Peak Hour Factor				0.74	0.74	0.74	0.86	0.86	0.86	0.83	0.83	0.83
Percent Heavy Veh, %				2	2	2	0	2	2	0	2	2
Cap, veh/h				395	9	347	0	1419	607	0	1642	377
Arrive On Green				0.23	0.23	0.23	0.00	0.40	0.40	0.00	0.40	0.40
Sat Flow, veh/h				1742	41	1530	0	3647	1519	0	4281	944
Grp Volume(v), veh/h				130	0	174	0	553	192	0	361	184
Grp Sat Flow(s),veh/h/ln				1783	0	1530	0	1777	1519	0	1702	1652
Q Serve(g_s), s				2.0	0.0	3.3	0.0	3.7	2.9	0.0	2.4	2.5
Cycle Q Clear(g_c), s				2.0	0.0	3.3	0.0	3.7	2.9	0.0	2.4	2.5
Prop In Lane				0.98		1.00	0.00		1.00	0.00		0.57
Lane Grp Cap(c), veh/h				405	0	347	0	1419	607	0	1359	660
V/C Ratio(X)				0.32	0.00	0.50	0.00	0.39	0.32	0.00	0.27	0.28
Avail Cap(c_a), veh/h				2555	0	2192	0	6334	2708	0	6067	2945
HCM Platoon Ratio				1.00	1.00	1.00	1.00	1.00	1.00	1.00	1.00	1.00
Upstream Filter(I)				1.00	0.00	1.00	0.00	1.00	1.00	0.00	1.00	1.00
Uniform Delay (d), s/veh				10.8	0.0	11.3	0.0	7.1	6.9	0.0	6.8	6.8
Incr Delay (d2), s/veh				0.5	0.0	1.1	0.0	0.2	0.3	0.0	0.1	0.2
Initial Q Delay(d3),s/veh				0.0	0.0	0.0	0.0	0.0	0.0	0.0	0.0	0.0
%ile BackOfQ(50%),veh/ln				0.7	0.0	0.9	0.0	0.8	0.5	0.0	0.5	0.5
Unsig. Movement Delay, s/veh												
LnGrp Delay(d),s/veh				11.2	0.0	12.4	0.0	7.3	7.2	0.0	6.9	7.0
LnGrp LOS				B	A	B	A	A	A	A	A	A
Approach Vol, veh/h					304			745			545	
Approach Delay, s/veh					11.9			7.3			6.9	
Approach LOS					B			A			A	

Timer - Assigned Phs	2		6		8			
Phs Duration (G+Y+Rc), s	19.8		19.8		13.7			
Change Period (Y+Rc), s	6.4		6.4		6.1			
Max Green Setting (Gmax), s	59.6		59.6		47.9			
Max Q Clear Time (g_c+I1), s	5.7		4.5		5.3			
Green Ext Time (p_c), s	4.7		3.7		1.4			

Intersection Summary		
HCM 6th Ctrl Delay	8.0	
HCM 6th LOS	A	



Movement	EBL	EBT	EBR	WBL	WBT	WBR	NBL	NBT	NBR	SBL	SBT	SBR
Lane Configurations												
Traffic Volume (veh/h)	88	2	176	0	0	0	0	554	54	73	384	0
Future Volume (veh/h)	88	2	176	0	0	0	0	554	54	73	384	0
Initial Q (Qb), veh	0	0	0				0	0	0	0	0	0
Ped-Bike Adj(A_pbT)	1.00		0.93				1.00		0.95	1.00		1.00
Parking Bus, Adj	1.00	1.00	1.00				1.00	1.00	1.00	1.00	1.00	1.00
Work Zone On Approach		No						No			No	
Adj Sat Flow, veh/h/ln	1870	1870	1870				0	1870	1870	1870	1870	0
Adj Flow Rate, veh/h	106	2	212				0	644	63	100	526	0
Peak Hour Factor	0.83	0.83	0.83				0.86	0.86	0.86	0.73	0.73	0.73
Percent Heavy Veh, %	2	2	2				0	2	2	2	2	0
Cap, veh/h	328	6	489				0	1178	501	141	1906	0
Arrive On Green	0.19	0.19	0.19				0.00	0.33	0.33	0.08	0.54	0.00
Sat Flow, veh/h	1750	33	2607				0	3647	1512	1781	3647	0
Grp Volume(v), veh/h	108	0	212				0	644	63	100	526	0
Grp Sat Flow(s),veh/h/ln	1783	0	1304				0	1777	1512	1781	1777	0
Q Serve(g_s), s	2.4	0.0	3.3				0.0	6.7	1.3	2.5	3.6	0.0
Cycle Q Clear(g_c), s	2.4	0.0	3.3				0.0	6.7	1.3	2.5	3.6	0.0
Prop In Lane	0.98		1.00				0.00		1.00	1.00		0.00
Lane Grp Cap(c), veh/h	335	0	489				0	1178	501	141	1906	0
V/C Ratio(X)	0.32	0.00	0.43				0.00	0.55	0.13	0.71	0.28	0.00
Avail Cap(c_a), veh/h	1492	0	2182				0	3422	1456	799	5462	0
HCM Platoon Ratio	1.00	1.00	1.00				1.00	1.00	1.00	1.00	1.00	1.00
Upstream Filter(I)	1.00	0.00	1.00				0.00	1.00	1.00	1.00	1.00	0.00
Uniform Delay (d), s/veh	15.9	0.0	16.3				0.0	12.4	10.6	20.3	5.7	0.0
Incr Delay (d2), s/veh	0.6	0.0	0.6				0.0	0.4	0.1	6.5	0.1	0.0
Initial Q Delay(d3),s/veh	0.0	0.0	0.0				0.0	0.0	0.0	0.0	0.0	0.0
%ile BackOfQ(50%),veh/ln	0.9	0.0	0.9				0.0	2.1	0.3	1.1	0.8	0.0
Unsig. Movement Delay, s/veh												
LnGrp Delay(d),s/veh	16.5	0.0	16.9				0.0	12.8	10.7	26.8	5.8	0.0
LnGrp LOS	B	A	B				A	B	B	C	A	A
Approach Vol, veh/h		320						707			626	
Approach Delay, s/veh		16.7						12.6			9.1	
Approach LOS		B						B			A	

Timer - Assigned Phs	1	2	4	6
Phs Duration (G+Y+Rc), s	9.3	21.4	14.6	30.7
Change Period (Y+Rc), s	5.7	6.4	6.1	6.4
Max Green Setting (Gmax), s	4.6	43.6	37.9	69.6
Max Q Clear Time (g_c+I1), s	4.4	8.7	5.3	5.6
Green Ext Time (p_c), s	0.2	4.8	1.6	3.7

Intersection Summary	
HCM 6th Ctrl Delay	12.1
HCM 6th LOS	B

Notes

* HCM 6th computational engine requires equal clearance times for the phases crossing the barrier.



Movement	EBL	EBT	EBR	WBL	WBT	WBR	NBL	NBT	NBR	SBL	SBT	SBR
Lane Configurations												
Traffic Volume (veh/h)	72	91	34	2	91	61	56	82	1	120	68	32
Future Volume (veh/h)	72	91	34	2	91	61	56	82	1	120	68	32
Initial Q (Qb), veh	0	0	0	0	0	0	0	0	0	0	0	0
Ped-Bike Adj(A_pbT)	1.00		0.96	1.00		0.95	1.00		0.98	1.00		0.96
Parking Bus, Adj	1.00	1.00	1.00	1.00	1.00	1.00	1.00	1.00	1.00	1.00	1.00	1.00
Work Zone On Approach		No			No			No			No	
Adj Sat Flow, veh/h/ln	1870	1870	1870	1870	1870	1870	1870	1870	1870	1870	1870	1870
Adj Flow Rate, veh/h	91	115	43	3	121	81	78	114	1	222	126	59
Peak Hour Factor	0.79	0.79	0.79	0.75	0.75	0.75	0.72	0.72	0.72	0.54	0.54	0.54
Percent Heavy Veh, %	2	2	2	2	2	2	2	2	2	2	2	2
Cap, veh/h	117	341	277	7	225	180	100	1431	623	256	1161	510
Arrive On Green	0.07	0.18	0.18	0.00	0.12	0.12	0.06	0.40	0.40	0.14	0.49	0.49
Sat Flow, veh/h	1781	1870	1522	1781	1870	1499	1781	3554	1546	1781	2371	1041
Grp Volume(v), veh/h	91	115	43	3	121	81	78	114	1	222	92	93
Grp Sat Flow(s),veh/h/ln	1781	1870	1522	1781	1870	1499	1781	1777	1546	1781	1777	1635
Q Serve(g_s), s	3.6	3.9	1.7	0.1	4.4	3.6	3.1	1.4	0.0	8.8	2.0	2.2
Cycle Q Clear(g_c), s	3.6	3.9	1.7	0.1	4.4	3.6	3.1	1.4	0.0	8.8	2.0	2.2
Prop In Lane	1.00		1.00	1.00		1.00	1.00		1.00	1.00		0.64
Lane Grp Cap(c), veh/h	117	341	277	7	225	180	100	1431	623	256	870	801
V/C Ratio(X)	0.78	0.34	0.16	0.42	0.54	0.45	0.78	0.08	0.00	0.87	0.11	0.12
Avail Cap(c_a), veh/h	258	929	756	123	787	631	241	1431	623	256	870	801
HCM Platoon Ratio	1.00	1.00	1.00	1.00	1.00	1.00	1.00	1.00	1.00	1.00	1.00	1.00
Upstream Filter(I)	1.00	1.00	1.00	1.00	1.00	1.00	1.00	1.00	1.00	1.00	1.00	1.00
Uniform Delay (d), s/veh	33.3	25.8	25.0	36.0	30.0	29.7	33.8	13.4	12.9	30.4	9.9	10.0
Incr Delay (d2), s/veh	4.1	0.6	0.3	13.6	2.0	1.7	4.8	0.1	0.0	24.9	0.2	0.3
Initial Q Delay(d3),s/veh	0.0	0.0	0.0	0.0	0.0	0.0	0.0	0.0	0.0	0.0	0.0	0.0
%ile BackOfQ(50%),veh/ln	1.7	1.7	0.6	0.1	2.0	1.4	1.4	0.6	0.0	5.4	0.8	0.8
Unsig. Movement Delay, s/veh												
LnGrp Delay(d),s/veh	37.4	26.4	25.2	49.6	32.0	31.4	38.5	13.5	12.9	55.3	10.2	10.3
LnGrp LOS	D	C	C	D	C	C	D	B	B	E	B	B
Approach Vol, veh/h		249			205			193			407	
Approach Delay, s/veh		30.2			32.0			23.6			34.8	
Approach LOS		C			C			C			C	

Timer - Assigned Phs	1	2	3	4	5	6	7	8
Phs Duration (G+Y+Rc), s	8.7	40.6	9.4	13.8	15.0	34.3	4.9	18.3
Change Period (Y+Rc), s	4.6	5.1	4.6	5.1	4.6	5.1	4.6	5.1
Max Green Setting (Gmax), s	4.1	29.8	10.5	30.5	10.4	29.2	5.0	36.0
Max Q Clear Time (g_c+I1), s	5.1	4.2	5.6	6.4	10.8	3.4	2.1	5.9
Green Ext Time (p_c), s	0.0	1.5	0.0	0.9	0.0	0.9	0.0	0.8

Intersection Summary	
HCM 6th Ctrl Delay	31.1
HCM 6th LOS	C



Movement	EBL	EBT	EBR	WBL	WBT	WBR	NBL	NBT	NBR	SBL	SBT	SBR
Lane Configurations												
Traffic Volume (veh/h)	143	77	70	44	62	176	67	315	63	367	407	189
Future Volume (veh/h)	143	77	70	44	62	176	67	315	63	367	407	189
Initial Q (Qb), veh	0	0	0	0	0	0	0	0	0	0	0	0
Ped-Bike Adj(A_pbT)	1.00		0.96	1.00		0.96	1.00		0.96	1.00		0.97
Parking Bus, Adj	1.00	1.00	1.00	1.00	1.00	1.00	1.00	1.00	1.00	1.00	1.00	1.00
Work Zone On Approach		No			No			No			No	
Adj Sat Flow, veh/h/ln	1870	1870	1870	1870	1870	1870	1870	1870	1870	1870	1870	1870
Adj Flow Rate, veh/h	188	101	92	53	75	212	78	366	73	459	509	236
Peak Hour Factor	0.76	0.76	0.76	0.83	0.83	0.83	0.86	0.86	0.86	0.80	0.80	0.80
Percent Heavy Veh, %	2	2	2	2	2	2	2	2	2	2	2	2
Cap, veh/h	287	301	244	276	290	601	121	598	118	412	874	403
Arrive On Green	0.16	0.16	0.16	0.15	0.15	0.15	0.07	0.20	0.20	0.23	0.37	0.37
Sat Flow, veh/h	1781	1870	1516	1781	1870	1514	1781	2938	579	1781	2340	1079
Grp Volume(v), veh/h	188	101	92	53	75	212	78	219	220	459	386	359
Grp Sat Flow(s),veh/h/ln	1781	1870	1516	1781	1870	1514	1781	1777	1740	1781	1777	1642
Q Serve(g_s), s	10.5	5.1	5.8	2.8	3.8	10.6	4.5	11.9	12.2	24.6	18.5	18.6
Cycle Q Clear(g_c), s	10.5	5.1	5.8	2.8	3.8	10.6	4.5	11.9	12.2	24.6	18.5	18.6
Prop In Lane	1.00		1.00	1.00		1.00	1.00		0.33	1.00		0.66
Lane Grp Cap(c), veh/h	287	301	244	276	290	601	121	361	354	412	664	614
V/C Ratio(X)	0.65	0.34	0.38	0.19	0.26	0.35	0.65	0.61	0.62	1.11	0.58	0.59
Avail Cap(c_a), veh/h	553	581	471	603	633	879	214	500	489	412	712	658
HCM Platoon Ratio	1.00	1.00	1.00	1.00	1.00	1.00	1.00	1.00	1.00	1.00	1.00	1.00
Upstream Filter(I)	1.00	1.00	1.00	1.00	1.00	1.00	1.00	1.00	1.00	1.00	1.00	1.00
Uniform Delay (d), s/veh	41.8	39.5	39.8	39.1	39.6	23.3	48.3	38.5	38.6	40.9	26.6	26.7
Incr Delay (d2), s/veh	3.6	0.9	1.4	0.1	0.2	0.1	2.2	5.9	6.3	78.9	3.0	3.3
Initial Q Delay(d3),s/veh	0.0	0.0	0.0	0.0	0.0	0.0	0.0	0.0	0.0	0.0	0.0	0.0
%ile BackOfQ(50%),veh/ln	4.8	2.4	2.2	1.2	1.7	3.7	2.0	5.6	5.7	19.4	8.0	7.5
Unsig. Movement Delay, s/veh												
LnGrp Delay(d),s/veh	45.4	40.5	41.2	39.3	39.7	23.4	50.5	44.3	44.9	119.8	29.6	30.0
LnGrp LOS	D	D	D	D	D	C	D	D	D	F	C	C
Approach Vol, veh/h		381			340			517			1204	
Approach Delay, s/veh		43.1			29.5			45.5			64.1	
Approach LOS		D			C			D			E	

Timer - Assigned Phs	1	2		4	5	6		8
Phs Duration (G+Y+Rc), s	11.9	47.0		22.9	30.0	28.9		24.5
Change Period (Y+Rc), s	* 4.7	* 7.3		6.4	5.4	7.3		7.4
Max Green Setting (Gmax), s	* 13	* 43		36.0	24.6	29.9		33.0
Max Q Clear Time (g_c+I1), s	10.5	20.6		12.6	26.6	14.2		12.5
Green Ext Time (p_c), s	0.0	10.3		0.7	0.0	4.8		2.0

Intersection Summary		
HCM 6th Ctrl Delay	52.1	
HCM 6th LOS	D	

Notes

* HCM 6th computational engine requires equal clearance times for the phases crossing the barrier.

Intersection	
Int Delay, s/veh	0.9

Movement	EBL	EBR	NBL	NBT	SBT	SBR
Lane Configurations						
Traffic Vol, veh/h	4	96	99	651	376	10
Future Vol, veh/h	4	96	99	651	376	10
Conflicting Peds, #/hr	10	10	10	0	0	10
Sign Control	Free	Free	Free	Free	Stop	Stop
RT Channelized	-	None	-	None	-	None
Storage Length	0	-	-	-	-	-
Veh in Median Storage, #	2	-	-	0	0	-
Grade, %	0	-	-	0	0	-
Peak Hour Factor	63	63	70	70	75	75
Heavy Vehicles, %	2	2	2	2	2	2
Mvmt Flow	6	152	141	930	501	13

Major/Minor	Major1		Minor2	
Conflicting Flow All	10	0	1222	20
Stage 1	-	-	10	-
Stage 2	-	-	1212	-
Critical Hdwy	4.14	-	6.54	6.94
Critical Hdwy Stg 1	-	-	-	-
Critical Hdwy Stg 2	-	-	5.54	-
Follow-up Hdwy	2.22	-	4.02	3.32
Pot Cap-1 Maneuver	1608	-	~ 178	1053
Stage 1	-	-	-	-
Stage 2	-	-	~ 253	-
Platoon blocked, %		-		
Mov Cap-1 Maneuver	1593	-	0	1033
Mov Cap-2 Maneuver	-	-	0	-
Stage 1	-	-	0	-
Stage 2	-	-	0	-

Approach	NB	SB
HCM Control Delay, s	1.4	
HCM LOS		-

Minor Lane/Major Mvmt	NBL	NBT	SBLn1	SBLn2
Capacity (veh/h)	1593	-	-	1033
HCM Lane V/C Ratio	0.089	-	-	0.256
HCM Control Delay (s)	7.5	0.5	-	9.7
HCM Lane LOS	A	A	-	A
HCM 95th %tile Q(veh)	0.3	-	-	1

Notes			
~: Volume exceeds capacity	$: Delay exceeds 300s	+: Computation Not Defined	*: All major volume in platoon



Movement	WBL	WBR	NBT	NBR	SBL	SBT
Lane Configurations						
Traffic Volume (veh/h)	11	68	414	53	75	223
Future Volume (veh/h)	11	68	414	53	75	223
Initial Q (Qb), veh	0	0	0	0	0	0
Ped-Bike Adj(A_pbT)	1.00	1.00		0.96	1.00	
Parking Bus, Adj	1.00	1.00	1.00	1.00	1.00	1.00
Work Zone On Approach	No		No			No
Adj Sat Flow, veh/h/ln	1870	1870	1870	1870	1870	1870
Adj Flow Rate, veh/h	12	75	531	68	87	259
Peak Hour Factor	0.91	0.91	0.78	0.78	0.86	0.86
Percent Heavy Veh, %	2	2	2	2	2	2
Cap, veh/h	152	135	1319	168	202	1175
Arrive On Green	0.09	0.09	0.42	0.42	0.11	0.63
Sat Flow, veh/h	1781	1585	3246	402	1781	1870
Grp Volume(v), veh/h	12	75	298	301	87	259
Grp Sat Flow(s),veh/h/ln	1781	1585	1777	1778	1781	1870
Q Serve(g_s), s	0.3	2.2	5.7	5.8	2.2	2.9
Cycle Q Clear(g_c), s	0.3	2.2	5.7	5.8	2.2	2.9
Prop In Lane	1.00	1.00		0.23	1.00	
Lane Grp Cap(c), veh/h	152	135	744	744	202	1175
V/C Ratio(X)	0.08	0.56	0.40	0.40	0.43	0.22
Avail Cap(c_a), veh/h	1014	902	2627	2629	1142	4197
HCM Platoon Ratio	1.00	1.00	1.00	1.00	1.00	1.00
Upstream Filter(I)	1.00	1.00	1.00	1.00	1.00	1.00
Uniform Delay (d), s/veh	20.6	21.5	9.9	9.9	20.2	3.9
Incr Delay (d2), s/veh	0.2	3.5	1.3	1.3	0.5	0.3
Initial Q Delay(d3),s/veh	0.0	0.0	0.0	0.0	0.0	0.0
%ile BackOfQ(50%),veh/ln	0.1	0.1	1.9	1.9	0.8	0.6
Unsig. Movement Delay, s/veh						
LnGrp Delay(d),s/veh	20.8	25.0	11.2	11.2	20.7	4.3
LnGrp LOS	C	C	B	B	C	A
Approach Vol, veh/h	87		599			346
Approach Delay, s/veh	24.4		11.2			8.4
Approach LOS	C		B			A

Timer - Assigned Phs		2		4	5	6
Phs Duration (G+Y+Rc), s		38.5		10.4	10.2	28.2
Change Period (Y+Rc), s		* 7.8		6.2	* 4.7	7.8
Max Green Setting (Gmax), s		* 1.1E2		27.8	* 31	72.2
Max Q Clear Time (g_c+I1), s		4.9		4.2	4.2	7.8
Green Ext Time (p_c), s		4.4		0.2	0.1	11.4

Intersection Summary	
HCM 6th Ctrl Delay	11.4
HCM 6th LOS	B

Notes

* HCM 6th computational engine requires equal clearance times for the phases crossing the barrier.

Intersection	
Int Delay, s/veh	2.6

Movement	EBT	EBR	WBL	WBT	NBL	NBR
Lane Configurations						
Traffic Vol, veh/h	77	13	11	134	25	42
Future Vol, veh/h	77	13	11	134	25	42
Conflicting Peds, #/hr	0	10	10	0	10	10
Sign Control	Free	Free	Free	Free	Stop	Stop
RT Channelized	-	None	-	None	-	None
Storage Length	-	-	-	-	0	-
Veh in Median Storage, #	0	-	-	0	0	-
Grade, %	0	-	-	0	0	-
Peak Hour Factor	91	91	57	57	70	70
Heavy Vehicles, %	2	2	2	2	2	2
Mvmt Flow	85	14	19	235	36	60

Major/Minor	Major1		Major2		Minor1	
Conflicting Flow All	0	0	109	0	385	112
Stage 1	-	-	-	-	102	-
Stage 2	-	-	-	-	283	-
Critical Hdwy	-	-	4.12	-	6.42	6.22
Critical Hdwy Stg 1	-	-	-	-	5.42	-
Critical Hdwy Stg 2	-	-	-	-	5.42	-
Follow-up Hdwy	-	-	2.218	-	3.518	3.318
Pot Cap-1 Maneuver	-	-	1481	-	618	941
Stage 1	-	-	-	-	922	-
Stage 2	-	-	-	-	765	-
Platoon blocked, %	-	-		-		
Mov Cap-1 Maneuver	-	-	1467	-	596	923
Mov Cap-2 Maneuver	-	-	-	-	596	-
Stage 1	-	-	-	-	913	-
Stage 2	-	-	-	-	747	-

Approach	EB	WB	NB
HCM Control Delay, s	0	0.6	10.4
HCM LOS			B

Minor Lane/Major Mvmt	NBLn1	EBT	EBR	WBL	WBT
Capacity (veh/h)	766	-	-	1467	-
HCM Lane V/C Ratio	0.125	-	-	0.013	-
HCM Control Delay (s)	10.4	-	-	7.5	0
HCM Lane LOS	B	-	-	A	A
HCM 95th %tile Q(veh)	0.4	-	-	0	-

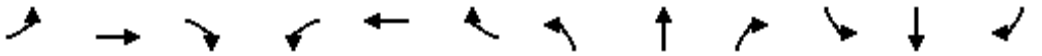

Movement	EBL	EBT	EBR	WBL	WBT	WBR	NBL	NBT	NBR	SBL	SBT	SBR
Lane Configurations												
Traffic Volume (veh/h)	46	47	27	5	49	83	30	430	11	97	226	70
Future Volume (veh/h)	46	47	27	5	49	83	30	430	11	97	226	70
Initial Q (Qb), veh	0	0	0	0	0	0	0	0	0	0	0	0
Ped-Bike Adj(A_pbT)	1.00		0.97	1.00		1.00	1.00		0.97	1.00		0.97
Parking Bus, Adj	1.00	1.00	1.00	1.00	1.00	1.00	1.00	1.00	1.00	1.00	1.00	1.00
Work Zone On Approach		No			No			No			No	
Adj Sat Flow, veh/h/ln	1870	1870	1870	1870	1870	1870	1870	1870	1870	1870	1870	1870
Adj Flow Rate, veh/h	48	49	28	6	61	0	35	506	13	126	294	91
Peak Hour Factor	0.95	0.95	0.95	0.80	0.80	0.80	0.85	0.85	0.85	0.77	0.77	0.77
Percent Heavy Veh, %	2	2	2	2	2	2	2	2	2	2	2	2
Cap, veh/h	85	535	278	14	710		68	973	421	169	882	267
Arrive On Green	0.05	0.24	0.24	0.01	0.20	0.00	0.04	0.27	0.27	0.09	0.33	0.33
Sat Flow, veh/h	1781	2233	1158	1781	3554	1585	1781	3554	1536	1781	2668	807
Grp Volume(v), veh/h	48	38	39	6	61	0	35	506	13	126	194	191
Grp Sat Flow(s),veh/h/ln	1781	1777	1615	1781	1777	1585	1781	1777	1536	1781	1777	1698
Q Serve(g_s), s	1.4	0.9	1.0	0.2	0.7	0.0	1.0	6.3	0.3	3.6	4.3	4.5
Cycle Q Clear(g_c), s	1.4	0.9	1.0	0.2	0.7	0.0	1.0	6.3	0.3	3.6	4.3	4.5
Prop In Lane	1.00		0.72	1.00		1.00	1.00		1.00	1.00		0.48
Lane Grp Cap(c), veh/h	85	426	387	14	710		68	973	421	169	587	561
V/C Ratio(X)	0.56	0.09	0.10	0.42	0.09		0.52	0.52	0.03	0.75	0.33	0.34
Avail Cap(c_a), veh/h	524	1523	1384	252	2503		422	3338	1443	966	2212	2114
HCM Platoon Ratio	1.00	1.00	1.00	1.00	1.00	1.00	1.00	1.00	1.00	1.00	1.00	1.00
Upstream Filter(I)	1.00	1.00	1.00	1.00	1.00	0.00	1.00	1.00	1.00	1.00	1.00	1.00
Uniform Delay (d), s/veh	24.4	15.5	15.5	25.9	17.1	0.0	24.7	16.1	13.9	23.1	13.2	13.2
Incr Delay (d2), s/veh	5.7	0.1	0.1	18.6	0.1	0.0	5.9	0.4	0.0	6.4	0.3	0.4
Initial Q Delay(d3),s/veh	0.0	0.0	0.0	0.0	0.0	0.0	0.0	0.0	0.0	0.0	0.0	0.0
%ile BackOfQ(50%),veh/ln	0.7	0.3	0.3	0.1	0.3	0.0	0.5	2.2	0.1	1.6	1.4	1.4
Unsig. Movement Delay, s/veh												
LnGrp Delay(d),s/veh	30.1	15.6	15.6	44.5	17.1	0.0	30.7	16.5	14.0	29.5	13.5	13.6
LnGrp LOS	C	B	B	D	B		C	B	B	C	B	B
Approach Vol, veh/h		125			67	A		554			511	
Approach Delay, s/veh		21.2			19.6			17.4			17.5	
Approach LOS		C			B			B			B	

Timer - Assigned Phs	1	2	3	4	5	6	7	8
Phs Duration (G+Y+Rc), s	9.6	20.1	5.0	17.7	6.6	23.1	7.1	15.6
Change Period (Y+Rc), s	4.6	5.8	4.6	5.1	4.6	5.8	4.6	5.1
Max Green Setting (Gmax), s	28.4	49.2	7.4	44.9	12.4	65.2	15.4	36.9
Max Q Clear Time (g_c+I1), s	5.6	8.3	2.2	3.0	3.0	6.5	3.4	2.7
Green Ext Time (p_c), s	0.3	3.5	0.0	0.4	0.0	2.3	0.1	0.3

Intersection Summary	
HCM 6th Ctrl Delay	17.9
HCM 6th LOS	B

Notes

Unsignalized Delay for [WBR] is excluded from calculations of the approach delay and intersection delay.

Intersection	
Intersection Delay, s/veh	75.8
Intersection LOS	F

Movement	EBL	EBT	EBR	WBL	WBT	WBR	NBL	NBT	NBR	SBL	SBT	SBR
Lane Configurations												
Traffic Vol, veh/h	125	151	25	32	227	22	47	121	100	59	47	215
Future Vol, veh/h	125	151	25	32	227	22	47	121	100	59	47	215
Peak Hour Factor	0.69	0.69	0.69	0.73	0.73	0.73	0.67	0.67	0.67	0.77	0.77	0.77
Heavy Vehicles, %	2	2	2	2	2	2	2	2	2	2	2	2
Mvmt Flow	181	219	36	44	311	30	70	181	149	77	61	279
Number of Lanes	0	1	1	0	1	0	0	1	0	0	1	1

Approach	EB	WB	NB	SB
Opposing Approach	WB	EB	SB	NB
Opposing Lanes	1	2	2	1
Conflicting Approach Left	SB	NB	EB	WB
Conflicting Lanes Left	2	1	2	1
Conflicting Approach Right	NB	SB	WB	EB
Conflicting Lanes Right	1	2	1	2
HCM Control Delay	90.2	89.9	96.9	27.6
HCM LOS	F	F	F	D

Lane	NBLn1	EBLn1	EBLn2	WBLn1	SBLn1	SBLn2
Vol Left, %	18%	45%	0%	11%	56%	0%
Vol Thru, %	45%	55%	0%	81%	44%	0%
Vol Right, %	37%	0%	100%	8%	0%	100%
Sign Control	Stop	Stop	Stop	Stop	Stop	Stop
Traffic Vol by Lane	268	276	25	281	106	215
LT Vol	47	125	0	32	59	0
Through Vol	121	151	0	227	47	0
RT Vol	100	0	25	22	0	215
Lane Flow Rate	400	400	36	385	138	279
Geometry Grp	6	7	7	6	7	7
Degree of Util (X)	1.06	1.062	0.088	1.032	0.381	0.697
Departure Headway (Hd)	10.01	9.996	9.025	10.269	10.59	9.561
Convergence, Y/N	Yes	Yes	Yes	Yes	Yes	Yes
Cap	364	368	399	358	341	380
Service Time	8.01	7.696	6.725	8.269	8.29	7.261
HCM Lane V/C Ratio	1.099	1.087	0.09	1.075	0.405	0.734
HCM Control Delay	96.9	97.2	12.6	89.9	19.7	31.5
HCM Lane LOS	F	F	B	F	C	D
HCM 95th-tile Q	13.4	13.5	0.3	12.4	1.7	5.1

Intersection	
Intersection Delay, s/veh	105
Intersection LOS	F

Movement	EBL	EBT	EBR	WBL	WBT	WBR	NBL	NBT	NBR	SBL	SBT	SBR
Lane Configurations												
Traffic Vol, veh/h	50	237	22	0	207	101	21	169	4	123	133	53
Future Vol, veh/h	50	237	22	0	207	101	21	169	4	123	133	53
Peak Hour Factor	0.68	0.68	0.68	0.70	0.70	0.70	0.64	0.64	0.64	0.69	0.69	0.69
Heavy Vehicles, %	2	2	2	2	2	2	2	2	2	2	2	2
Mvmt Flow	74	349	32	0	296	144	33	264	6	178	193	77
Number of Lanes	0	1	0	0	1	0	0	1	0	0	1	0

Approach	EB	WB	NB	SB
Opposing Approach	WB	EB	SB	NB
Opposing Lanes	1	1	1	1
Conflicting Approach Left	SB	NB	EB	WB
Conflicting Lanes Left	1	1	1	1
Conflicting Approach Right	NB	SB	WB	EB
Conflicting Lanes Right	1	1	1	1
HCM Control Delay	126.9	106.5	47.6	120.2
HCM LOS	F	F	E	F

Lane	NBLn1	EBLn1	WBLn1	SBLn1
Vol Left, %	11%	16%	0%	40%
Vol Thru, %	87%	77%	67%	43%
Vol Right, %	2%	7%	33%	17%
Sign Control	Stop	Stop	Stop	Stop
Traffic Vol by Lane	194	309	308	309
LT Vol	21	50	0	123
Through Vol	169	237	207	133
RT Vol	4	22	101	53
Lane Flow Rate	303	454	440	448
Geometry Grp	1	1	1	1
Degree of Util (X)	0.812	1.153	1.093	1.134
Departure Headway (Hd)	10.9	9.904	9.862	9.894
Convergence, Y/N	Yes	Yes	Yes	Yes
Cap	333	368	370	372
Service Time	8.9	7.904	7.862	7.894
HCM Lane V/C Ratio	0.91	1.234	1.189	1.204
HCM Control Delay	47.6	126.9	106.5	120.2
HCM Lane LOS	E	F	F	F
HCM 95th-tile Q	6.9	16.5	14.5	15.9

Intersection	
Intersection Delay, s/veh	68
Intersection LOS	F

Movement	EBL	EBT	EBR	WBL	WBT	WBR	NBL	NBT	NBR	SBL	SBT	SBR
Lane Configurations												
Traffic Vol, veh/h	100	195	13	24	225	81	8	175	9	48	156	181
Future Vol, veh/h	100	195	13	24	225	81	8	175	9	48	156	181
Peak Hour Factor	0.61	0.61	0.61	0.70	0.70	0.70	0.87	0.87	0.87	0.76	0.76	0.76
Heavy Vehicles, %	2	2	2	2	2	2	2	2	2	2	2	2
Mvmt Flow	164	320	21	34	321	116	9	201	10	63	205	238
Number of Lanes	1	1	0	0	1	0	1	1	0	1	1	0

Approach	EB	WB	NB	SB
Opposing Approach	WB	EB	SB	NB
Opposing Lanes	1	2	2	2
Conflicting Approach Left	SB	NB	EB	WB
Conflicting Lanes Left	2	2	2	1
Conflicting Approach Right	NB	SB	WB	EB
Conflicting Lanes Right	2	2	1	2
HCM Control Delay	36.2	120.1	24.3	70.2
HCM LOS	E	F	C	F

Lane	NBLn1	NBLn2	EBLn1	EBLn2	WBLn1	SBLn1	SBLn2
Vol Left, %	100%	0%	100%	0%	7%	100%	0%
Vol Thru, %	0%	95%	0%	94%	68%	0%	46%
Vol Right, %	0%	5%	0%	6%	25%	0%	54%
Sign Control	Stop	Stop	Stop	Stop	Stop	Stop	Stop
Traffic Vol by Lane	8	184	100	208	330	48	337
LT Vol	8	0	100	0	24	48	0
Through Vol	0	175	0	195	225	0	156
RT Vol	0	9	0	13	81	0	181
Lane Flow Rate	9	211	164	341	471	63	443
Geometry Grp	7	7	7	7	6	7	7
Degree of Util (X)	0.026	0.556	0.421	0.832	1.145	0.161	1.015
Departure Headway (Hd)	10.673	10.108	9.845	9.277	8.988	9.678	8.759
Convergence, Y/N	Yes	Yes	Yes	Yes	Yes	Yes	Yes
Cap	337	360	369	392	405	373	417
Service Time	8.373	7.808	7.545	6.977	6.988	7.378	6.459
HCM Lane V/C Ratio	0.027	0.586	0.444	0.87	1.163	0.169	1.062
HCM Control Delay	13.7	24.8	19.5	44.2	120.1	14.2	78.2
HCM Lane LOS	B	C	C	E	F	B	F
HCM 95th-tile Q	0.1	3.2	2	7.7	17.2	0.6	12.9



Movement	EBL	EBT	EBR	WBL	WBT	WBR	NBL	NBT	NBR	SBL	SBT	SBR
Lane Configurations												
Traffic Volume (veh/h)	65	159	21	4	219	76	10	179	1	40	126	101
Future Volume (veh/h)	65	159	21	4	219	76	10	179	1	40	126	101
Initial Q (Qb), veh	0	0	0	0	0	0	0	0	0	0	0	0
Ped-Bike Adj(A_pbT)	0.99		0.95	0.99		0.95	1.00		0.95	1.00		0.95
Parking Bus, Adj	1.00	1.00	1.00	1.00	1.00	1.00	1.00	1.00	1.00	1.00	1.00	1.00
Work Zone On Approach		No			No			No			No	
Adj Sat Flow, veh/h/ln	1870	1870	1870	1870	1870	1870	1870	1870	1870	1870	1870	1870
Adj Flow Rate, veh/h	96	234	31	6	327	113	14	259	1	43	137	110
Peak Hour Factor	0.68	0.68	0.68	0.67	0.67	0.67	0.69	0.69	0.69	0.92	0.92	0.92
Percent Heavy Veh, %	2	2	2	2	2	2	2	2	2	2	2	2
Cap, veh/h	175	349	42	67	424	145	44	476	2	109	274	220
Arrive On Green	0.32	0.32	0.32	0.32	0.32	0.32	0.02	0.26	0.26	0.06	0.29	0.29
Sat Flow, veh/h	289	1074	128	7	1307	446	1781	1861	7	1781	937	752
Grp Volume(v), veh/h	361	0	0	446	0	0	14	0	260	43	0	247
Grp Sat Flow(s),veh/h/ln	1491	0	0	1760	0	0	1781	0	1869	1781	0	1689
Q Serve(g_s), s	0.0	0.0	0.0	0.0	0.0	0.0	0.4	0.0	6.7	1.3	0.0	6.8
Cycle Q Clear(g_c), s	11.8	0.0	0.0	12.8	0.0	0.0	0.4	0.0	6.7	1.3	0.0	6.8
Prop In Lane	0.27		0.09	0.01		0.25	1.00		0.00	1.00		0.45
Lane Grp Cap(c), veh/h	565	0	0	636	0	0	44	0	478	109	0	493
V/C Ratio(X)	0.64	0.00	0.00	0.70	0.00	0.00	0.32	0.00	0.54	0.40	0.00	0.50
Avail Cap(c_a), veh/h	2007	0	0	2364	0	0	296	0	1485	391	0	1420
HCM Platoon Ratio	1.00	1.00	1.00	1.00	1.00	1.00	1.00	1.00	1.00	1.00	1.00	1.00
Upstream Filter(I)	1.00	0.00	0.00	1.00	0.00	0.00	1.00	0.00	1.00	1.00	0.00	1.00
Uniform Delay (d), s/veh	16.4	0.0	0.0	17.1	0.0	0.0	26.9	0.0	18.0	25.3	0.0	16.4
Incr Delay (d2), s/veh	1.2	0.0	0.0	1.4	0.0	0.0	1.6	0.0	4.4	0.9	0.0	3.6
Initial Q Delay(d3),s/veh	0.0	0.0	0.0	0.0	0.0	0.0	0.0	0.0	0.0	0.0	0.0	0.0
%ile BackOfQ(50%),veh/ln	3.7	0.0	0.0	4.8	0.0	0.0	0.2	0.0	3.1	0.5	0.0	2.7
Unsig. Movement Delay, s/veh												
LnGrp Delay(d),s/veh	17.6	0.0	0.0	18.5	0.0	0.0	28.4	0.0	22.4	26.2	0.0	20.0
LnGrp LOS	B	A	A	B	A	A	C	A	C	C	A	C
Approach Vol, veh/h		361			446			274			290	
Approach Delay, s/veh		17.6			18.5			22.7			20.9	
Approach LOS		B			B			C			C	

Timer - Assigned Phs	1	2		4	5	6		8
Phs Duration (G+Y+Rc), s	6.1	24.3		25.7	8.1	22.2		25.7
Change Period (Y+Rc), s	* 4.7	7.9		7.5	* 4.7	* 7.9		7.5
Max Green Setting (Gmax), s	* 9.3	47.1		73.5	* 12	* 45		73.5
Max Q Clear Time (g_c+I1), s	2.4	8.8		14.8	3.3	8.7		13.8
Green Ext Time (p_c), s	0.0	5.0		3.4	0.0	4.9		2.9

Intersection Summary	
HCM 6th Ctrl Delay	19.6
HCM 6th LOS	B

Notes

* HCM 6th computational engine requires equal clearance times for the phases crossing the barrier.

Intersection	
Int Delay, s/veh	2.6

Movement	EBL	EBT	EBR	WBL	WBT	WBR	NBL	NBT	NBR	SBL	SBT	SBR
Lane Configurations		↕			↕			↕			↕	
Traffic Vol, veh/h	14	184	0	0	259	36	0	0	0	33	0	35
Future Vol, veh/h	14	184	0	0	259	36	0	0	0	33	0	35
Conflicting Peds, #/hr	10	0	10	10	0	10	10	0	10	10	0	10
Sign Control	Free	Free	Free	Free	Free	Free	Stop	Stop	Stop	Stop	Stop	Stop
RT Channelized	-	-	None	-	-	None	-	-	None	-	-	None
Storage Length	-	-	-	-	-	-	-	-	-	-	-	-
Veh in Median Storage, #	-	0	-	-	0	-	-	0	-	-	0	-
Grade, %	-	0	-	-	0	-	-	0	-	-	0	-
Peak Hour Factor	75	75	92	92	77	77	92	92	92	57	92	57
Heavy Vehicles, %	2	2	2	2	2	2	2	2	2	2	2	2
Mvmt Flow	19	245	0	0	336	47	0	0	0	58	0	61

Major/Minor	Major1			Major2			Minor1			Minor2		
Conflicting Flow All	393	0	0	255	0	0	693	686	265	663	663	380
Stage 1	-	-	-	-	-	-	293	293	-	370	370	-
Stage 2	-	-	-	-	-	-	400	393	-	293	293	-
Critical Hdwy	4.12	-	-	4.12	-	-	7.12	6.52	6.22	7.12	6.52	6.22
Critical Hdwy Stg 1	-	-	-	-	-	-	6.12	5.52	-	6.12	5.52	-
Critical Hdwy Stg 2	-	-	-	-	-	-	6.12	5.52	-	6.12	5.52	-
Follow-up Hdwy	2.218	-	-	2.218	-	-	3.518	4.018	3.318	3.518	4.018	3.318
Pot Cap-1 Maneuver	1166	-	-	1310	-	-	358	370	774	375	382	667
Stage 1	-	-	-	-	-	-	715	670	-	650	620	-
Stage 2	-	-	-	-	-	-	626	606	-	715	670	-
Platoon blocked, %		-	-		-	-						
Mov Cap-1 Maneuver	1155	-	-	1298	-	-	314	356	759	363	367	654
Mov Cap-2 Maneuver	-	-	-	-	-	-	314	356	-	363	367	-
Stage 1	-	-	-	-	-	-	695	651	-	632	614	-
Stage 2	-	-	-	-	-	-	562	600	-	695	651	-

Approach	EB	WB	NB	SB
HCM Control Delay, s	0.6	0	0	15.2
HCM LOS			A	C

Minor Lane/Major Mvmt	NBLn1	EBL	EBT	EBR	WBL	WBT	WBR	SBLn1
Capacity (veh/h)	-	1155	-	-	1298	-	-	471
HCM Lane V/C Ratio	-	0.016	-	-	-	-	-	0.253
HCM Control Delay (s)	0	8.2	0	-	0	-	-	15.2
HCM Lane LOS	A	A	A	-	A	-	-	C
HCM 95th %tile Q(veh)	-	0	-	-	0	-	-	1

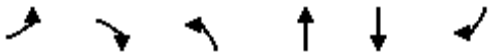

Movement	EBL	EBR	NBL	NBT	SBT	SBR
Lane Configurations						
Traffic Volume (veh/h)	58	162	242	496	197	50
Future Volume (veh/h)	58	162	242	496	197	50
Initial Q (Qb), veh	0	0	0	0	0	0
Ped-Bike Adj(A_pbT)	1.00	1.00	1.00			0.95
Parking Bus, Adj	1.00	1.00	1.00	1.00	1.00	1.00
Work Zone On Approach	No			No	No	
Adj Sat Flow, veh/h/ln	1870	1870	1870	1870	1870	1870
Adj Flow Rate, veh/h	71	198	295	605	243	62
Peak Hour Factor	0.82	0.82	0.82	0.82	0.81	0.81
Percent Heavy Veh, %	2	2	2	2	2	2
Cap, veh/h	268	585	390	1070	359	91
Arrive On Green	0.15	0.15	0.22	0.57	0.25	0.25
Sat Flow, veh/h	1781	1585	1781	1870	1419	362
Grp Volume(v), veh/h	71	198	295	605	0	305
Grp Sat Flow(s),veh/h/ln	1781	1585	1781	1870	0	1781
Q Serve(g_s), s	1.4	3.6	6.2	8.1	0.0	6.1
Cycle Q Clear(g_c), s	1.4	3.6	6.2	8.1	0.0	6.1
Prop In Lane	1.00	1.00	1.00			0.20
Lane Grp Cap(c), veh/h	268	585	390	1070	0	450
V/C Ratio(X)	0.26	0.34	0.76	0.57	0.00	0.68
Avail Cap(c_a), veh/h	898	1146	2515	5611	0	2649
HCM Platoon Ratio	1.00	1.00	1.00	1.00	1.00	1.00
Upstream Filter(I)	1.00	1.00	1.00	1.00	0.00	1.00
Uniform Delay (d), s/veh	14.9	9.0	14.5	5.4	0.0	13.4
Incr Delay (d2), s/veh	0.5	0.3	3.0	0.5	0.0	1.8
Initial Q Delay(d3),s/veh	0.0	0.0	0.0	0.0	0.0	0.0
%ile BackOfQ(50%),veh/ln	0.5	3.6	2.2	1.4	0.0	2.0
Unsig. Movement Delay, s/veh						
LnGrp Delay(d),s/veh	15.4	9.4	17.5	5.8	0.0	15.2
LnGrp LOS	B	A	B	A	A	B
Approach Vol, veh/h	269			900	305	
Approach Delay, s/veh	11.0			9.7	15.2	
Approach LOS	B			A	B	

Timer - Assigned Phs		2		4	5	6
Phs Duration (G+Y+Rc), s		28.7		11.0	12.7	16.0
Change Period (Y+Rc), s		6.0		5.0	4.0	6.0
Max Green Setting (Gmax), s		119.0		20.0	56.0	59.0
Max Q Clear Time (g_c+I1), s		10.1		5.6	8.2	8.1
Green Ext Time (p_c), s		4.3		0.7	0.9	1.9

Intersection Summary		
HCM 6th Ctrl Delay		11.0
HCM 6th LOS		B



Movement	WBL	WBR	NBT	NBR	SBL	SBT
Lane Configurations						
Traffic Volume (veh/h)	34	32	519	35	7	213
Future Volume (veh/h)	34	32	519	35	7	213
Initial Q (Qb), veh	0	0	0	0	0	0
Ped-Bike Adj(A_pbT)	1.00	1.00		0.96	1.00	
Parking Bus, Adj	1.00	1.00	1.00	1.00	1.00	1.00
Work Zone On Approach	No		No			No
Adj Sat Flow, veh/h/ln	1870	1870	1870	1870	1870	1870
Adj Flow Rate, veh/h	51	48	641	43	9	260
Peak Hour Factor	0.67	0.67	0.81	0.81	0.82	0.82
Percent Heavy Veh, %	2	2	2	2	2	2
Cap, veh/h	154	156	855	57	21	1151
Arrive On Green	0.09	0.09	0.49	0.49	0.01	0.62
Sat Flow, veh/h	1781	1585	1728	116	1781	1870
Grp Volume(v), veh/h	51	48	0	684	9	260
Grp Sat Flow(s),veh/h/ln	1781	1585	0	1844	1781	1870
Q Serve(g_s), s	1.0	1.0	0.0	11.0	0.2	2.3
Cycle Q Clear(g_c), s	1.0	1.0	0.0	11.0	0.2	2.3
Prop In Lane	1.00	1.00		0.06	1.00	
Lane Grp Cap(c), veh/h	154	156	0	912	21	1151
V/C Ratio(X)	0.33	0.31	0.00	0.75	0.42	0.23
Avail Cap(c_a), veh/h	725	664	0	5504	483	6292
HCM Platoon Ratio	1.00	1.00	1.00	1.00	1.00	1.00
Upstream Filter(I)	1.00	1.00	0.00	1.00	1.00	1.00
Uniform Delay (d), s/veh	15.8	15.5	0.0	7.5	18.1	3.2
Incr Delay (d2), s/veh	1.2	1.1	0.0	1.3	12.8	0.1
Initial Q Delay(d3),s/veh	0.0	0.0	0.0	0.0	0.0	0.0
%ile BackOfQ(50%),veh/ln	0.4	0.4	0.0	2.3	0.1	0.2
Unsig. Movement Delay, s/veh						
LnGrp Delay(d),s/veh	17.1	16.6	0.0	8.7	30.9	3.3
LnGrp LOS	B	B	A	A	C	A
Approach Vol, veh/h	99		684			269
Approach Delay, s/veh	16.8		8.7			4.2
Approach LOS	B		A			A

Timer - Assigned Phs	1	2				6	8
Phs Duration (G+Y+Rc), s	4.4	24.2				28.7	8.2
Change Period (Y+Rc), s	4.0	6.0				6.0	5.0
Max Green Setting (Gmax), s	10.0	110.0				124.0	15.0
Max Q Clear Time (g_c+I1), s	2.2	13.0				4.3	3.0
Green Ext Time (p_c), s	0.0	5.3				1.5	0.2

Intersection Summary	
HCM 6th Ctrl Delay	8.3
HCM 6th LOS	A



Movement	EBL	EBT	EBR	WBL	WBT	WBR	NBL	NBT	NBR	SBL	SBT	SBR
Lane Configurations												
Traffic Volume (veh/h)	1	38	2	22	60	122	4	22	41	15	4	3
Future Volume (veh/h)	1	38	2	22	60	122	4	22	41	15	4	3
Initial Q (Qb), veh	0	0	0	0	0	0	0	0	0	0	0	0
Ped-Bike Adj(A_pbT)	1.00		0.87	1.00		0.92	0.99		0.98	1.00		0.96
Parking Bus, Adj	1.00	1.00	1.00	1.00	1.00	1.00	1.00	1.00	1.00	1.00	1.00	1.00
Work Zone On Approach		No			No			No			No	
Adj Sat Flow, veh/h/ln	1870	1870	1870	1870	1870	1870	1870	1870	1870	1870	1870	1870
Adj Flow Rate, veh/h	2	70	4	27	74	151	5	30	56	22	6	4
Peak Hour Factor	0.54	0.54	0.54	0.81	0.81	0.81	0.73	0.73	0.73	0.69	0.69	0.69
Percent Heavy Veh, %	2	2	2	2	2	2	2	2	2	2	2	2
Cap, veh/h	4	132	8	71	195	211	69	333	570	832	579	386
Arrive On Green	0.08	0.08	0.08	0.14	0.14	0.14	0.56	0.56	0.56	0.56	0.56	0.56
Sat Flow, veh/h	48	1689	97	493	1352	1460	41	592	1014	1306	1030	687
Grp Volume(v), veh/h	76	0	0	101	0	151	91	0	0	22	0	10
Grp Sat Flow(s),veh/h/ln	1834	0	0	1846	0	1460	1648	0	0	1306	0	1717
Q Serve(g_s), s	3.3	0.0	0.0	4.1	0.0	8.3	0.0	0.0	0.0	0.0	0.0	0.2
Cycle Q Clear(g_c), s	3.3	0.0	0.0	4.1	0.0	8.3	2.1	0.0	0.0	0.5	0.0	0.2
Prop In Lane	0.03		0.05	0.27		1.00	0.05		0.62	1.00		0.40
Lane Grp Cap(c), veh/h	144	0	0	267	0	211	971	0	0	832	0	965
V/C Ratio(X)	0.53	0.00	0.00	0.38	0.00	0.72	0.09	0.00	0.00	0.03	0.00	0.01
Avail Cap(c_a), veh/h	789	0	0	1081	0	856	971	0	0	832	0	965
HCM Platoon Ratio	1.00	1.00	1.00	1.00	1.00	1.00	1.00	1.00	1.00	1.00	1.00	1.00
Upstream Filter(I)	1.00	0.00	0.00	1.00	0.00	1.00	1.00	0.00	0.00	1.00	0.00	1.00
Uniform Delay (d), s/veh	37.1	0.0	0.0	32.4	0.0	34.1	8.5	0.0	0.0	8.1	0.0	8.1
Incr Delay (d2), s/veh	1.1	0.0	0.0	0.3	0.0	1.7	0.2	0.0	0.0	0.1	0.0	0.0
Initial Q Delay(d3),s/veh	0.0	0.0	0.0	0.0	0.0	0.0	0.0	0.0	0.0	0.0	0.0	0.0
%ile BackOfQ(50%),veh/ln	1.5	0.0	0.0	1.8	0.0	2.9	0.8	0.0	0.0	0.2	0.0	0.1
Unsig. Movement Delay, s/veh												
LnGrp Delay(d),s/veh	38.2	0.0	0.0	32.7	0.0	35.8	8.7	0.0	0.0	8.2	0.0	8.1
LnGrp LOS	D	A	A	C	A	D	A	A	A	A	A	A
Approach Vol, veh/h		76			252			91			32	
Approach Delay, s/veh		38.2			34.6			8.7			8.2	
Approach LOS		D			C			A			A	

Timer - Assigned Phs	2	4	6	8
Phs Duration (G+Y+Rc), s	53.0	12.6	53.0	18.1
Change Period (Y+Rc), s	6.0	6.0	6.0	6.0
Max Green Setting (Gmax), s	47.0	36.0	47.0	49.0
Max Q Clear Time (g_c+I1), s	4.1	5.3	2.5	10.3
Green Ext Time (p_c), s	0.1	0.2	0.2	0.6

Intersection Summary	
HCM 6th Ctrl Delay	28.1
HCM 6th LOS	C



Movement	EBL	EBT	EBR	WBL	WBT	WBR	NBL	NBT	NBR	SBL	SBT	SBR
Lane Configurations												
Traffic Volume (veh/h)	52	16	31	1	44	28	127	1227	20	21	990	35
Future Volume (veh/h)	52	16	31	1	44	28	127	1227	20	21	990	35
Initial Q (Qb), veh	0	0	0	0	0	0	0	0	0	0	0	0
Ped-Bike Adj(A_pbT)	1.00		0.94	1.00		0.96	1.00		0.96	1.00		0.98
Parking Bus, Adj	1.00	1.00	1.00	1.00	1.00	1.00	1.00	1.00	1.00	1.00	1.00	1.00
Work Zone On Approach		No			No			No			No	
Adj Sat Flow, veh/h/ln	1870	1870	1870	1870	1870	1870	1870	1870	1870	1870	1870	1870
Adj Flow Rate, veh/h	67	21	40	1	56	36	159	1534	25	28	1303	46
Peak Hour Factor	0.78	0.78	0.78	0.78	0.78	0.78	0.80	0.80	0.80	0.76	0.76	0.76
Percent Heavy Veh, %	2	2	2	2	2	2	2	2	2	2	2	2
Cap, veh/h	132	448	860	5	315	256	284	1725	28	90	1601	814
Arrive On Green	0.07	0.24	0.24	0.00	0.17	0.17	0.08	0.48	0.48	0.05	0.45	0.45
Sat Flow, veh/h	1781	1870	2635	1781	1870	1518	3456	3576	58	1781	3554	1548
Grp Volume(v), veh/h	67	21	40	1	56	36	159	761	798	28	1303	46
Grp Sat Flow(s),veh/h/ln	1781	1870	1317	1781	1870	1518	1728	1777	1857	1781	1777	1548
Q Serve(g_s), s	4.4	1.0	1.3	0.1	3.1	2.4	5.4	47.1	47.3	1.8	38.6	1.8
Cycle Q Clear(g_c), s	4.4	1.0	1.3	0.1	3.1	2.4	5.4	47.1	47.3	1.8	38.6	1.8
Prop In Lane	1.00		1.00	1.00		1.00	1.00		0.03	1.00		1.00
Lane Grp Cap(c), veh/h	132	448	860	5	315	256	284	857	896	90	1601	814
V/C Ratio(X)	0.51	0.05	0.05	0.21	0.18	0.14	0.56	0.89	0.89	0.31	0.81	0.06
Avail Cap(c_a), veh/h	147	709	1228	147	709	576	285	857	896	147	1661	841
HCM Platoon Ratio	1.00	1.00	1.00	1.00	1.00	1.00	1.00	1.00	1.00	1.00	1.00	1.00
Upstream Filter(I)	1.00	1.00	1.00	1.00	1.00	1.00	1.00	1.00	1.00	1.00	1.00	1.00
Uniform Delay (d), s/veh	54.1	35.5	28.3	60.3	43.2	43.0	53.6	28.4	28.5	55.6	28.9	14.1
Incr Delay (d2), s/veh	1.1	0.1	0.0	7.5	0.6	0.5	1.5	13.2	13.0	0.7	4.7	0.1
Initial Q Delay(d3),s/veh	0.0	0.0	0.0	0.0	0.0	0.0	0.0	0.0	0.0	0.0	0.0	0.0
%ile BackOfQ(50%),veh/ln	2.0	0.5	0.4	0.0	1.5	1.0	2.3	21.0	22.0	0.8	15.9	0.7
Unsig. Movement Delay, s/veh												
LnGrp Delay(d),s/veh	55.2	35.6	28.4	67.9	43.8	43.5	55.1	41.7	41.4	56.3	33.6	14.3
LnGrp LOS	E	D	C	E	D	D	E	D	D	E	C	B
Approach Vol, veh/h		128			93			1718			1377	
Approach Delay, s/veh		43.6			43.9			42.8			33.4	
Approach LOS		D			D			D			C	

Timer - Assigned Phs	1	2	3	4	5	6	7	8
Phs Duration (G+Y+Rc), s	11.8	66.9	6.0	36.6	15.7	63.0	14.7	27.9
Change Period (Y+Rc), s	* 5.7	* 8.4	* 5.7	7.5	* 5.7	* 8.4	* 5.7	7.5
Max Green Setting (Gmax), s	* 10	* 57	* 10	46.0	* 10	* 57	* 10	46.0
Max Q Clear Time (g_c+I1), s	3.8	49.3	2.1	3.3	7.4	40.6	6.4	5.1
Green Ext Time (p_c), s	0.0	7.1	0.0	0.5	0.1	14.1	0.0	0.9

Intersection Summary	
HCM 6th Ctrl Delay	39.0
HCM 6th LOS	D

Notes

* HCM 6th computational engine requires equal clearance times for the phases crossing the barrier.

Intersection	
Int Delay, s/veh	2.6

Movement	EBL	EBR	NBL	NBT	SBT	SBR
Lane Configurations						
Traffic Vol, veh/h	59	53	20	738	339	19
Future Vol, veh/h	59	53	20	738	339	19
Conflicting Peds, #/hr	10	10	10	0	0	10
Sign Control	Stop	Stop	Free	Free	Free	Free
RT Channelized	-	None	-	None	-	None
Storage Length	0	-	410	-	-	80
Veh in Median Storage, #	0	-	-	0	0	-
Grade, %	0	-	-	0	0	-
Peak Hour Factor	92	92	92	92	92	92
Heavy Vehicles, %	2	2	2	2	2	2
Mvmt Flow	64	58	22	802	368	21

Major/Minor	Minor2		Major1		Major2	
Conflicting Flow All	1234	388	399	0	-	0
Stage 1	378	-	-	-	-	-
Stage 2	856	-	-	-	-	-
Critical Hdwy	6.42	6.22	4.12	-	-	-
Critical Hdwy Stg 1	5.42	-	-	-	-	-
Critical Hdwy Stg 2	5.42	-	-	-	-	-
Follow-up Hdwy	3.518	3.318	2.218	-	-	-
Pot Cap-1 Maneuver	195	660	1160	-	-	-
Stage 1	693	-	-	-	-	-
Stage 2	416	-	-	-	-	-
Platoon blocked, %				-	-	-
Mov Cap-1 Maneuver	187	647	1149	-	-	-
Mov Cap-2 Maneuver	187	-	-	-	-	-
Stage 1	673	-	-	-	-	-
Stage 2	412	-	-	-	-	-

Approach	EB	NB	SB
HCM Control Delay, s	27.1	0.2	0
HCM LOS	D		

Minor Lane/Major Mvmt	NBL	NBT	EBLn1	SBT	SBR
Capacity (veh/h)	1149	-	282	-	-
HCM Lane V/C Ratio	0.019	-	0.432	-	-
HCM Control Delay (s)	8.2	-	27.1	-	-
HCM Lane LOS	A	-	D	-	-
HCM 95th %tile Q(veh)	0.1	-	2.1	-	-

Movement	EBL	EBT	EBR	WBL	WBT	WBR	NBL	NBT	NBR	SBL	SBT	SBR
Lane Configurations												
Traffic Volume (veh/h)	116	102	105	208	75	258	40	315	36	140	164	37
Future Volume (veh/h)	116	102	105	208	75	258	40	315	36	140	164	37
Initial Q (Qb), veh	0	0	0	0	0	0	0	0	0	0	0	0
Ped-Bike Adj(A_pbT)	1.00		0.97	1.00		0.95	1.00		0.97	1.00		0.97
Parking Bus, Adj	1.00	1.00	1.00	1.00	1.00	1.00	1.00	1.00	1.00	1.00	1.00	1.00
Work Zone On Approach		No			No			No			No	
Adj Sat Flow, veh/h/ln	1870	1870	1870	1870	1870	1870	1870	1870	1870	1870	1870	1870
Adj Flow Rate, veh/h	159	140	144	270	97	335	47	371	42	167	195	44
Peak Hour Factor	0.73	0.73	0.73	0.77	0.77	0.77	0.85	0.85	0.85	0.84	0.84	0.84
Percent Heavy Veh, %	2	2	2	2	2	2	2	2	2	2	2	2
Cap, veh/h	223	427	349	310	518	417	168	450	51	203	846	186
Arrive On Green	0.13	0.23	0.23	0.17	0.28	0.28	0.09	0.27	0.27	0.11	0.29	0.29
Sat Flow, veh/h	1781	1870	1531	1781	1870	1505	1781	1644	186	1781	2878	633
Grp Volume(v), veh/h	159	140	144	270	97	335	47	0	413	167	118	121
Grp Sat Flow(s),veh/h/ln	1781	1870	1531	1781	1870	1505	1781	0	1830	1781	1777	1734
Q Serve(g_s), s	7.4	5.4	6.9	12.7	3.4	17.8	2.1	0.0	18.2	7.9	4.3	4.5
Cycle Q Clear(g_c), s	7.4	5.4	6.9	12.7	3.4	17.8	2.1	0.0	18.2	7.9	4.3	4.5
Prop In Lane	1.00		1.00	1.00		1.00	1.00		0.10	1.00		0.36
Lane Grp Cap(c), veh/h	223	427	349	310	518	417	168	0	501	203	523	510
V/C Ratio(X)	0.71	0.33	0.41	0.87	0.19	0.80	0.28	0.00	0.82	0.82	0.23	0.24
Avail Cap(c_a), veh/h	373	501	410	539	675	543	249	0	767	352	848	827
HCM Platoon Ratio	1.00	1.00	1.00	1.00	1.00	1.00	1.00	1.00	1.00	1.00	1.00	1.00
Upstream Filter(I)	1.00	1.00	1.00	1.00	1.00	1.00	1.00	0.00	1.00	1.00	1.00	1.00
Uniform Delay (d), s/veh	36.1	27.7	28.3	34.5	23.7	28.9	36.2	0.0	29.2	37.2	22.9	23.0
Incr Delay (d2), s/veh	1.6	0.6	1.1	3.0	0.2	7.6	0.3	0.0	5.7	3.1	0.3	0.3
Initial Q Delay(d3),s/veh	0.0	0.0	0.0	0.0	0.0	0.0	0.0	0.0	0.0	0.0	0.0	0.0
%ile BackOfQ(50%),veh/ln	3.2	2.4	2.6	5.6	1.5	7.1	0.9	0.0	8.2	3.5	1.8	1.8
Unsig. Movement Delay, s/veh												
LnGrp Delay(d),s/veh	37.7	28.3	29.4	37.6	23.9	36.5	36.5	0.0	34.9	40.3	23.3	23.3
LnGrp LOS	D	C	C	D	C	D	D	A	C	D	C	C
Approach Vol, veh/h		443			702			460			406	
Approach Delay, s/veh		32.0			35.2			35.1			30.3	
Approach LOS		C			D			D			C	

Timer - Assigned Phs	1	2	3	4	5	6	7	8
Phs Duration (G+Y+Rc), s	13.8	29.5	19.0	23.6	12.1	31.3	14.8	27.8
Change Period (Y+Rc), s	4.0	6.0	4.0	4.0	4.0	6.0	4.0	4.0
Max Green Setting (Gmax), s	17.0	36.0	26.0	23.0	12.0	41.0	18.0	31.0
Max Q Clear Time (g_c+I1), s	9.9	20.2	14.7	8.9	4.1	6.5	9.4	19.8
Green Ext Time (p_c), s	0.1	3.0	0.3	1.5	0.0	2.0	0.1	2.0

Intersection Summary	
HCM 6th Ctrl Delay	33.5
HCM 6th LOS	C

Intersection	
Intersection Delay, s/veh	52.3
Intersection LOS	F

Movement	EBL	EBT	EBR	WBL	WBT	WBR	NBL	NBT	NBR	SBL	SBT	SBR
Lane Configurations												
Traffic Vol, veh/h	11	128	106	31	205	146	139	144	14	223	139	66
Future Vol, veh/h	11	128	106	31	205	146	139	144	14	223	139	66
Peak Hour Factor	0.77	0.77	0.77	0.83	0.83	0.83	0.85	0.85	0.85	0.83	0.83	0.83
Heavy Vehicles, %	2	2	2	2	2	2	2	2	2	2	2	2
Mvmt Flow	14	166	138	37	247	176	164	169	16	269	167	80
Number of Lanes	0	1	1	0	1	1	0	1	0	0	1	0

Approach	EB	WB	NB	SB
Opposing Approach	WB	EB	SB	NB
Opposing Lanes	2	2	1	1
Conflicting Approach Left	SB	NB	EB	WB
Conflicting Lanes Left	1	1	2	2
Conflicting Approach Right	NB	SB	WB	EB
Conflicting Lanes Right	1	1	2	2
HCM Control Delay	17.8	24.2	37.7	108.7
HCM LOS	C	C	E	F

Lane	NBLn1	EBLn1	EBLn2	WBLn1	WBLn2	SBLn1
Vol Left, %	47%	8%	0%	13%	0%	52%
Vol Thru, %	48%	92%	0%	87%	0%	32%
Vol Right, %	5%	0%	100%	0%	100%	15%
Sign Control	Stop	Stop	Stop	Stop	Stop	Stop
Traffic Vol by Lane	297	139	106	236	146	428
LT Vol	139	11	0	31	0	223
Through Vol	144	128	0	205	0	139
RT Vol	14	0	106	0	146	66
Lane Flow Rate	349	181	138	284	176	516
Geometry Grp	2	7	7	7	7	2
Degree of Util (X)	0.795	0.45	0.313	0.682	0.383	1.126
Departure Headway (Hd)	8.635	9.464	8.687	9.107	8.305	7.862
Convergence, Y/N	Yes	Yes	Yes	Yes	Yes	Yes
Cap	423	383	417	401	436	464
Service Time	6.635	7.164	6.387	6.807	6.005	5.929
HCM Lane V/C Ratio	0.825	0.473	0.331	0.708	0.404	1.112
HCM Control Delay	37.7	19.7	15.3	29.2	16.1	108.7
HCM Lane LOS	E	C	C	D	C	F
HCM 95th-tile Q	7	2.3	1.3	4.9	1.8	17.9

Intersection	
Int Delay, s/veh	1.9

Movement	EBL	EBT	EBR	WBL	WBT	WBR	NBL	NBT	NBR	SBL	SBT	SBR
Lane Configurations		↕			↕			↕			↕	
Traffic Vol, veh/h	2	239	12	4	239	1	24	2	7	3	2	2
Future Vol, veh/h	2	239	12	4	239	1	24	2	7	3	2	2
Conflicting Peds, #/hr	10	0	10	10	0	10	10	0	10	10	0	10
Sign Control	Free	Free	Free	Free	Free	Free	Stop	Stop	Stop	Stop	Stop	Stop
RT Channelized	-	-	None	-	-	None	-	-	None	-	-	None
Storage Length	-	-	-	-	-	-	-	-	-	-	-	-
Veh in Median Storage, #	-	0	-	-	0	-	-	0	-	-	0	-
Grade, %	-	0	-	-	0	-	-	0	-	-	0	-
Peak Hour Factor	88	88	88	80	80	80	58	58	58	25	25	25
Heavy Vehicles, %	2	2	2	2	2	2	2	2	2	2	2	2
Mvmt Flow	2	272	14	5	299	1	41	3	12	12	8	8

Major/Minor	Major1			Major2			Minor1			Minor2		
Conflicting Flow All	310	0	0	296	0	0	621	613	299	621	620	320
Stage 1	-	-	-	-	-	-	293	293	-	320	320	-
Stage 2	-	-	-	-	-	-	328	320	-	301	300	-
Critical Hdwy	4.12	-	-	4.12	-	-	7.12	6.52	6.22	7.12	6.52	6.22
Critical Hdwy Stg 1	-	-	-	-	-	-	6.12	5.52	-	6.12	5.52	-
Critical Hdwy Stg 2	-	-	-	-	-	-	6.12	5.52	-	6.12	5.52	-
Follow-up Hdwy	2.218	-	-	2.218	-	-	3.518	4.018	3.318	3.518	4.018	3.318
Pot Cap-1 Maneuver	1250	-	-	1265	-	-	400	408	741	400	404	721
Stage 1	-	-	-	-	-	-	715	670	-	692	652	-
Stage 2	-	-	-	-	-	-	685	652	-	708	666	-
Platoon blocked, %		-	-		-	-						
Mov Cap-1 Maneuver	1238	-	-	1253	-	-	380	397	727	381	393	707
Mov Cap-2 Maneuver	-	-	-	-	-	-	380	397	-	381	393	-
Stage 1	-	-	-	-	-	-	706	662	-	684	642	-
Stage 2	-	-	-	-	-	-	659	642	-	685	658	-

Approach	EB	WB	NB	SB
HCM Control Delay, s	0.1	0.1	14.8	13.7
HCM LOS			B	B

Minor Lane/Major Mvmt	NBLn1	EBL	EBT	EBR	WBL	WBT	WBR	SBLn1
Capacity (veh/h)	424	1238	-	-	1253	-	-	443
HCM Lane V/C Ratio	0.134	0.002	-	-	0.004	-	-	0.063
HCM Control Delay (s)	14.8	7.9	0	-	7.9	0	-	13.7
HCM Lane LOS	B	A	A	-	A	A	-	B
HCM 95th %tile Q(veh)	0.5	0	-	-	0	-	-	0.2

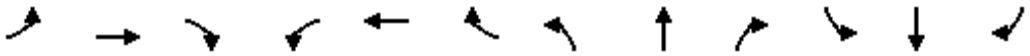

Movement	EBL	EBT	EBR	WBL	WBT	WBR	NBL	NBT	NBR	SBL	SBT	SBR
Lane Configurations												
Traffic Volume (veh/h)	70	122	101	70	148	96	122	652	65	79	795	48
Future Volume (veh/h)	70	122	101	70	148	96	122	652	65	79	795	48
Initial Q (Qb), veh	0	0	0	0	0	0	0	0	0	0	0	0
Ped-Bike Adj(A_pbT)	1.00		0.95	1.00		0.96	1.00		0.96	1.00		0.96
Parking Bus, Adj	1.00	1.00	1.00	1.00	1.00	1.00	1.00	1.00	1.00	1.00	1.00	1.00
Work Zone On Approach		No			No			No			No	
Adj Sat Flow, veh/h/ln	1870	1870	1870	1870	1870	1870	1870	1870	1870	1870	1870	1870
Adj Flow Rate, veh/h	76	133	110	89	187	122	127	679	68	86	864	52
Peak Hour Factor	0.92	0.92	0.92	0.79	0.79	0.79	0.96	0.96	0.96	0.92	0.92	0.92
Percent Heavy Veh, %	2	2	2	2	2	2	2	2	2	2	2	2
Cap, veh/h	97	283	229	112	299	242	153	1743	174	108	1737	105
Arrive On Green	0.05	0.15	0.15	0.06	0.16	0.16	0.09	0.54	0.54	0.06	0.51	0.51
Sat Flow, veh/h	1781	1870	1513	1781	1870	1516	1781	3249	325	1781	3397	204
Grp Volume(v), veh/h	76	133	110	89	187	122	127	371	376	86	452	464
Grp Sat Flow(s),veh/h/ln	1781	1870	1513	1781	1870	1516	1781	1777	1798	1781	1777	1824
Q Serve(g_s), s	5.1	7.8	8.0	5.9	11.2	8.8	8.4	14.7	14.7	5.7	20.0	20.0
Cycle Q Clear(g_c), s	5.1	7.8	8.0	5.9	11.2	8.8	8.4	14.7	14.7	5.7	20.0	20.0
Prop In Lane	1.00		1.00	1.00		1.00	1.00		0.18	1.00		0.11
Lane Grp Cap(c), veh/h	97	283	229	112	299	242	153	953	964	108	909	933
V/C Ratio(X)	0.79	0.47	0.48	0.80	0.63	0.50	0.83	0.39	0.39	0.79	0.50	0.50
Avail Cap(c_a), veh/h	154	500	405	169	516	418	214	953	964	181	909	933
HCM Platoon Ratio	1.00	1.00	1.00	1.00	1.00	1.00	1.00	1.00	1.00	1.00	1.00	1.00
Upstream Filter(I)	1.00	1.00	1.00	0.81	0.81	0.81	0.90	0.90	0.90	1.00	1.00	1.00
Uniform Delay (d), s/veh	56.1	46.5	46.6	55.5	47.0	46.1	54.0	16.3	16.3	55.6	19.2	19.2
Incr Delay (d2), s/veh	5.2	0.5	0.6	6.1	0.7	0.5	11.3	1.1	1.1	4.8	1.9	1.9
Initial Q Delay(d3),s/veh	0.0	0.0	0.0	0.0	0.0	0.0	0.0	0.0	0.0	0.0	0.0	0.0
%ile BackOfQ(50%),veh/ln	2.4	3.6	3.0	2.8	5.2	3.3	4.3	6.2	6.3	2.7	8.6	8.8
Unsig. Movement Delay, s/veh												
LnGrp Delay(d),s/veh	61.3	47.0	47.2	61.6	47.7	46.5	65.3	17.4	17.4	60.4	21.1	21.1
LnGrp LOS	E	D	D	E	D	D	E	B	B	E	C	C
Approach Vol, veh/h		319			398			874			1002	
Approach Delay, s/veh		50.4			50.4			24.3			24.5	
Approach LOS		D			D			C			C	

Timer - Assigned Phs	1	2	3	4	5	6	7	8
Phs Duration (G+Y+Rc), s	12.9	70.1	13.1	23.9	15.9	67.1	12.1	24.9
Change Period (Y+Rc), s	5.6	5.7	5.6	5.7	5.6	5.7	5.6	5.7
Max Green Setting (Gmax), s	12.2	41.7	11.4	32.1	14.4	39.5	10.4	33.1
Max Q Clear Time (g_c+I1), s	7.7	16.7	7.9	10.0	10.4	22.0	7.1	13.2
Green Ext Time (p_c), s	0.0	3.2	0.0	0.6	0.1	3.7	0.0	0.8

Intersection Summary	
HCM 6th Ctrl Delay	31.6
HCM 6th LOS	C



Movement	EBL	EBT	EBR	WBL	WBT	WBR	NBL	NBT	NBR	SBL	SBT	SBR
Lane Configurations												
Traffic Volume (veh/h)	38	177	80	23	161	24	87	403	27	56	583	52
Future Volume (veh/h)	38	177	80	23	161	24	87	403	27	56	583	52
Initial Q (Qb), veh	0	0	0	0	0	0	0	0	0	0	0	0
Ped-Bike Adj(A_pbT)	1.00		0.97	0.99		0.97	1.00		0.96	1.00		0.95
Parking Bus, Adj	1.00	1.00	1.00	1.00	1.00	1.00	1.00	1.00	1.00	1.00	1.00	1.00
Work Zone On Approach		No			No			No			No	
Adj Sat Flow, veh/h/ln	1870	1870	1870	1870	1870	1870	1870	1870	1870	1870	1870	1870
Adj Flow Rate, veh/h	46	216	98	31	218	32	101	469	31	74	767	68
Peak Hour Factor	0.82	0.82	0.82	0.74	0.74	0.74	0.86	0.86	0.86	0.76	0.76	0.76
Percent Heavy Veh, %	2	2	2	2	2	2	2	2	2	2	2	2
Cap, veh/h	158	457	207	90	329	46	132	1194	79	104	1112	99
Arrive On Green	0.09	0.38	0.38	0.23	0.23	0.23	0.07	0.35	0.35	0.06	0.34	0.34
Sat Flow, veh/h	1781	1207	548	108	1437	199	1781	3373	222	1781	3287	291
Grp Volume(v), veh/h	46	0	314	281	0	0	101	246	254	74	414	421
Grp Sat Flow(s),veh/h/ln	1781	0	1755	1743	0	0	1781	1777	1818	1781	1777	1802
Q Serve(g_s), s	1.5	0.0	8.2	2.9	0.0	0.0	3.4	6.3	6.4	2.5	12.3	12.3
Cycle Q Clear(g_c), s	1.5	0.0	8.2	8.8	0.0	0.0	3.4	6.3	6.4	2.5	12.3	12.3
Prop In Lane	1.00		0.31	0.11		0.11	1.00		0.12	1.00		0.16
Lane Grp Cap(c), veh/h	158	0	665	465	0	0	132	629	644	104	601	609
V/C Ratio(X)	0.29	0.00	0.47	0.60	0.00	0.00	0.76	0.39	0.39	0.71	0.69	0.69
Avail Cap(c_a), veh/h	331	0	1398	1006	0	0	418	1387	1419	331	1299	1317
HCM Platoon Ratio	1.00	1.00	1.00	1.00	1.00	1.00	1.00	1.00	1.00	1.00	1.00	1.00
Upstream Filter(I)	1.00	0.00	1.00	1.00	0.00	0.00	1.00	1.00	1.00	1.00	1.00	1.00
Uniform Delay (d), s/veh	25.9	0.0	14.3	21.4	0.0	0.0	27.6	14.7	14.8	28.1	17.4	17.4
Incr Delay (d2), s/veh	1.0	0.0	0.5	1.3	0.0	0.0	8.8	0.4	0.4	8.5	1.4	1.4
Initial Q Delay(d3),s/veh	0.0	0.0	0.0	0.0	0.0	0.0	0.0	0.0	0.0	0.0	0.0	0.0
%ile BackOfQ(50%),veh/ln	0.6	0.0	2.9	3.5	0.0	0.0	1.7	2.4	2.4	1.3	4.7	4.8
Unsig. Movement Delay, s/veh												
LnGrp Delay(d),s/veh	26.9	0.0	14.8	22.7	0.0	0.0	36.4	15.1	15.2	36.6	18.8	18.8
LnGrp LOS	C	A	B	C	A	A	D	B	B	D	B	B
Approach Vol, veh/h		360			281			601			909	
Approach Delay, s/veh		16.4			22.7			18.7			20.2	
Approach LOS		B			C			B			C	

Timer - Assigned Phs	1	2		4	5	6	7	8
Phs Duration (G+Y+Rc), s	7.3	26.0		27.6	8.2	25.1	9.1	18.5
Change Period (Y+Rc), s	3.7	4.5		4.5	3.7	4.5	3.7	4.5
Max Green Setting (Gmax), s	11.3	47.5		48.5	14.3	44.5	11.3	33.5
Max Q Clear Time (g_c+I1), s	14.5	8.4		10.2	5.4	14.3	3.5	10.8
Green Ext Time (p_c), s	0.1	3.3		2.0	0.1	6.1	0.0	1.6

Intersection Summary		
HCM 6th Ctrl Delay		19.5
HCM 6th LOS		B



Movement	EBL	EBT	EBR	WBL	WBT	WBR	NBL	NBT	NBR	SBL	SBT	SBR
Lane Configurations												
Traffic Volume (veh/h)	37	134	68	128	126	175	31	620	84	99	754	30
Future Volume (veh/h)	37	134	68	128	126	175	31	620	84	99	754	30
Initial Q (Qb), veh	0	0	0	0	0	0	0	0	0	0	0	0
Ped-Bike Adj(A_pbT)	1.00		0.96	1.00		0.96	1.00		0.95	1.00		0.96
Parking Bus, Adj	1.00	1.00	1.00	1.00	1.00	1.00	1.00	1.00	1.00	1.00	1.00	1.00
Work Zone On Approach		No			No			No			No	
Adj Sat Flow, veh/h/ln	1870	1870	1870	1870	1870	1870	1870	1870	1870	1870	1870	1870
Adj Flow Rate, veh/h	40	144	73	133	131	182	39	785	106	112	857	34
Peak Hour Factor	0.93	0.93	0.93	0.96	0.96	0.96	0.79	0.79	0.79	0.88	0.88	0.88
Percent Heavy Veh, %	2	2	2	2	2	2	2	2	2	2	2	2
Cap, veh/h	52	189	96	180	177	298	67	1014	137	138	1267	50
Arrive On Green	0.19	0.19	0.19	0.20	0.20	0.20	0.04	0.32	0.32	0.08	0.36	0.36
Sat Flow, veh/h	271	977	495	919	905	1525	1781	3125	422	1781	3477	138
Grp Volume(v), veh/h	257	0	0	264	0	182	39	446	445	112	438	453
Grp Sat Flow(s),veh/h/ln	1744	0	0	1824	0	1525	1781	1777	1770	1781	1777	1838
Q Serve(g_s), s	15.6	0.0	0.0	15.2	0.0	12.2	2.4	25.3	25.3	6.9	23.2	23.2
Cycle Q Clear(g_c), s	15.6	0.0	0.0	15.2	0.0	12.2	2.4	25.3	25.3	6.9	23.2	23.2
Prop In Lane	0.16		0.28	0.50		1.00	1.00		0.24	1.00		0.08
Lane Grp Cap(c), veh/h	337	0	0	357	0	298	67	577	574	138	647	670
V/C Ratio(X)	0.76	0.00	0.00	0.74	0.00	0.61	0.58	0.77	0.77	0.81	0.68	0.68
Avail Cap(c_a), veh/h	579	0	0	605	0	506	97	659	657	180	742	768
HCM Platoon Ratio	1.00	1.00	1.00	1.00	1.00	1.00	1.00	1.00	1.00	1.00	1.00	1.00
Upstream Filter(I)	1.00	0.00	0.00	1.00	0.00	1.00	1.00	1.00	1.00	1.00	1.00	1.00
Uniform Delay (d), s/veh	42.6	0.0	0.0	42.2	0.0	41.0	52.8	34.0	34.0	50.6	29.9	29.9
Incr Delay (d2), s/veh	3.6	0.0	0.0	3.0	0.0	2.0	2.9	8.5	8.5	14.4	4.6	4.5
Initial Q Delay(d3),s/veh	0.0	0.0	0.0	0.0	0.0	0.0	0.0	0.0	0.0	0.0	0.0	0.0
%ile BackOfQ(50%),veh/ln	6.9	0.0	0.0	7.0	0.0	4.7	1.1	11.8	11.8	3.6	10.3	10.7
Unsig. Movement Delay, s/veh												
LnGrp Delay(d),s/veh	46.1	0.0	0.0	45.2	0.0	43.0	55.7	42.5	42.5	65.1	34.6	34.4
LnGrp LOS	D	A	A	D	A	D	E	D	D	E	C	C
Approach Vol, veh/h		257			446			930			1003	
Approach Delay, s/veh		46.1			44.3			43.1			37.9	
Approach LOS		D			D			D			D	

Timer - Assigned Phs	1	2		4	5	6		8
Phs Duration (G+Y+Rc), s	9.9	46.0		27.9	14.4	41.6		27.7
Change Period (Y+Rc), s	* 5.7	5.4		6.1	* 5.7	5.4		6.1
Max Green Setting (Gmax), s	* 6.1	46.6		37.0	* 11	41.4		37.0
Max Q Clear Time (g_c+I1), s	11.4	25.2		17.2	8.9	27.3		17.6
Green Ext Time (p_c), s	0.0	12.0		2.1	0.0	8.9		1.4

Intersection Summary		
HCM 6th Ctrl Delay		41.6
HCM 6th LOS		D

Notes

* HCM 6th computational engine requires equal clearance times for the phases crossing the barrier.



Movement	EBL	EBT	EBR	WBL	WBT	WBR	NBL	NBT	NBR	SBL	SBT	SBR
Lane Configurations												
Traffic Volume (veh/h)	54	105	172	59	146	65	121	491	32	44	477	53
Future Volume (veh/h)	54	105	172	59	146	65	121	491	32	44	477	53
Initial Q (Qb), veh	0	0	0	0	0	0	0	0	0	0	0	0
Ped-Bike Adj(A_pbT)	1.00		0.92	1.00		0.95	1.00		0.96	1.00		0.95
Parking Bus, Adj	1.00	1.00	1.00	1.00	1.00	1.00	1.00	1.00	1.00	1.00	1.00	1.00
Work Zone On Approach		No			No			No			No	
Adj Sat Flow, veh/h/ln	1870	1870	1870	1870	1870	1870	1870	1870	1870	1870	1870	1870
Adj Flow Rate, veh/h	59	115	189	94	232	103	134	546	36	48	518	58
Peak Hour Factor	0.91	0.91	0.91	0.63	0.63	0.63	0.90	0.90	0.90	0.92	0.92	0.92
Percent Heavy Veh, %	2	2	2	2	2	2	2	2	2	2	2	2
Cap, veh/h	81	159	190	101	249	111	162	615	41	63	561	452
Arrive On Green	0.13	0.13	0.13	0.26	0.26	0.26	0.09	0.36	0.36	0.04	0.30	0.30
Sat Flow, veh/h	624	1216	1451	383	945	420	1781	1730	114	1781	1870	1508
Grp Volume(v), veh/h	174	0	189	429	0	0	134	0	582	48	518	58
Grp Sat Flow(s),veh/h/ln	1839	0	1451	1748	0	0	1781	0	1844	1781	1870	1508
Q Serve(g_s), s	9.8	0.0	14.1	25.8	0.0	0.0	8.0	0.0	32.1	2.9	28.9	3.0
Cycle Q Clear(g_c), s	9.8	0.0	14.1	25.8	0.0	0.0	8.0	0.0	32.1	2.9	28.9	3.0
Prop In Lane	0.34		1.00	0.22		0.24	1.00		0.06	1.00		1.00
Lane Grp Cap(c), veh/h	240	0	190	461	0	0	162	0	655	63	561	452
V/C Ratio(X)	0.72	0.00	1.00	0.93	0.00	0.00	0.83	0.00	0.89	0.76	0.92	0.13
Avail Cap(c_a), veh/h	240	0	190	504	0	0	188	0	783	96	697	562
HCM Platoon Ratio	1.00	1.00	1.00	1.00	1.00	1.00	1.00	1.00	1.00	1.00	1.00	1.00
Upstream Filter(I)	1.00	0.00	1.00	1.00	0.00	0.00	1.00	0.00	1.00	1.00	1.00	1.00
Uniform Delay (d), s/veh	45.0	0.0	46.9	38.8	0.0	0.0	48.2	0.0	32.8	51.6	36.6	27.5
Incr Delay (d2), s/veh	9.0	0.0	64.4	22.3	0.0	0.0	20.0	0.0	9.7	7.1	14.4	0.0
Initial Q Delay(d3),s/veh	0.0	0.0	0.0	0.0	0.0	0.0	0.0	0.0	0.0	0.0	0.0	0.0
%ile BackOfQ(50%),veh/ln	5.0	0.0	8.4	13.6	0.0	0.0	4.3	0.0	15.2	1.4	14.7	1.1
Unsig. Movement Delay, s/veh												
LnGrp Delay(d),s/veh	54.0	0.0	111.3	61.1	0.0	0.0	68.2	0.0	42.4	58.7	51.0	27.5
LnGrp LOS	D	A	F	E	A	A	E	A	D	E	D	C
Approach Vol, veh/h		363			429			716			624	
Approach Delay, s/veh		83.8			61.1			47.2			49.4	
Approach LOS		F			E			D			D	

Timer - Assigned Phs	1	2		4	5	6		8
Phs Duration (G+Y+Rc), s	9.4	44.2		20.0	15.4	38.2		34.3
Change Period (Y+Rc), s	5.6	5.8		5.9	5.6	5.8		5.9
Max Green Setting (Gmax), s	5.8	45.8		14.1	11.4	40.2		31.1
Max Q Clear Time (g_c+I1), s	4.9	34.1		16.0	10.0	30.9		27.8
Green Ext Time (p_c), s	0.0	1.8		0.0	0.0	1.4		0.6

Intersection Summary		
HCM 6th Ctrl Delay		56.9
HCM 6th LOS		E

Intersection	
Intersection Delay, s/veh	46.6
Intersection LOS	E

Movement	EBL	EBT	EBR	WBL	WBT	WBR	NBL	NBT	NBR	SBL	SBT	SBR
Lane Configurations												
Traffic Vol, veh/h	41	118	79	43	108	47	58	412	39	98	522	59
Future Vol, veh/h	41	118	79	43	108	47	58	412	39	98	522	59
Peak Hour Factor	0.81	0.81	0.81	0.89	0.89	0.89	0.86	0.86	0.86	0.73	0.73	0.73
Heavy Vehicles, %	2	2	2	2	2	2	2	2	2	2	2	2
Mvmt Flow	51	146	98	48	121	53	67	479	45	134	715	81
Number of Lanes	0	1	0	0	1	0	1	2	0	1	2	0

Approach	EB	WB	NB	SB
Opposing Approach	WB	EB	SB	NB
Opposing Lanes	1	1	3	3
Conflicting Approach Left	SB	NB	EB	WB
Conflicting Lanes Left	3	3	1	1
Conflicting Approach Right	NB	SB	WB	EB
Conflicting Lanes Right	3	3	1	1
HCM Control Delay	34	25	27.4	67.9
HCM LOS	D	C	D	F

Lane	NBLn1	NBLn2	NBLn3	EBLn1	WBLn1	SBLn1	SBLn2	SBLn3
Vol Left, %	100%	0%	0%	17%	22%	100%	0%	0%
Vol Thru, %	0%	100%	78%	50%	55%	0%	100%	75%
Vol Right, %	0%	0%	22%	33%	24%	0%	0%	25%
Sign Control	Stop	Stop	Stop	Stop	Stop	Stop	Stop	Stop
Traffic Vol by Lane	58	275	176	238	198	98	348	233
LT Vol	58	0	0	41	43	98	0	0
Through Vol	0	275	137	118	108	0	348	174
RT Vol	0	0	39	79	47	0	0	59
Lane Flow Rate	67	319	205	294	222	134	477	319
Geometry Grp	7	7	7	7	7	7	7	7
Degree of Util (X)	0.171	0.766	0.483	0.736	0.581	0.334	1.116	0.731
Departure Headway (Hd)	9.44	8.914	8.751	9.321	9.694	8.95	8.426	8.24
Convergence, Y/N	Yes	Yes	Yes	Yes	Yes	Yes	Yes	Yes
Cap	382	409	414	391	374	401	434	440
Service Time	7.14	6.614	6.451	7.021	7.394	6.704	6.179	5.993
HCM Lane V/C Ratio	0.175	0.78	0.495	0.752	0.594	0.334	1.099	0.725
HCM Control Delay	14.1	35.4	19.4	34	25	16.2	107.6	30.4
HCM Lane LOS	B	E	C	D	C	C	F	D
HCM 95th-tile Q	0.6	6.4	2.6	5.8	3.5	1.4	16.8	5.8



Movement	EBL	EBT	EBR	WBL	WBT	WBR	NBL	NBT	NBR	SBL	SBT	SBR
Lane Configurations												
Traffic Volume (veh/h)	75	49	186	58	28	16	70	626	35	18	751	54
Future Volume (veh/h)	75	49	186	58	28	16	70	626	35	18	751	54
Initial Q (Qb), veh	0	0	0	0	0	0	0	0	0	0	0	0
Ped-Bike Adj(A_pbT)	1.00		0.96	1.00		0.95	1.00		0.96	1.00		0.96
Parking Bus, Adj	1.00	1.00	1.00	1.00	1.00	1.00	1.00	1.00	1.00	1.00	1.00	1.00
Work Zone On Approach		No			No			No			No	
Adj Sat Flow, veh/h/ln	1870	1870	1870	1870	1870	1870	1870	1870	1870	1870	1870	1870
Adj Flow Rate, veh/h	96	63	238	76	37	21	72	645	36	20	816	59
Peak Hour Factor	0.78	0.78	0.78	0.76	0.76	0.76	0.97	0.97	0.97	0.92	0.92	0.92
Percent Heavy Veh, %	2	2	2	2	2	2	2	2	2	2	2	2
Cap, veh/h	205	134	284	136	66	38	121	1392	78	63	1257	91
Arrive On Green	0.19	0.19	0.19	0.14	0.14	0.14	0.07	0.41	0.41	0.04	0.38	0.38
Sat Flow, veh/h	1096	719	1523	995	484	275	1781	3413	190	1781	3349	242
Grp Volume(v), veh/h	159	0	238	134	0	0	72	335	346	20	433	442
Grp Sat Flow(s),veh/h/ln	1816	0	1523	1754	0	0	1781	1777	1827	1781	1777	1814
Q Serve(g_s), s	6.5	0.0	12.6	6.0	0.0	0.0	3.3	11.5	11.5	0.9	16.8	16.8
Cycle Q Clear(g_c), s	6.5	0.0	12.6	6.0	0.0	0.0	3.3	11.5	11.5	0.9	16.8	16.8
Prop In Lane	0.60		1.00	0.57		0.16	1.00		0.10	1.00		0.13
Lane Grp Cap(c), veh/h	339	0	284	239	0	0	121	725	745	63	667	681
V/C Ratio(X)	0.47	0.00	0.84	0.56	0.00	0.00	0.59	0.46	0.46	0.32	0.65	0.65
Avail Cap(c_a), veh/h	463	0	388	553	0	0	224	949	976	177	902	921
HCM Platoon Ratio	1.00	1.00	1.00	1.00	1.00	1.00	1.00	1.00	1.00	1.00	1.00	1.00
Upstream Filter(I)	1.00	0.00	1.00	1.00	0.00	0.00	1.00	1.00	1.00	1.00	1.00	1.00
Uniform Delay (d), s/veh	30.3	0.0	32.7	33.7	0.0	0.0	37.8	18.0	18.1	39.3	21.5	21.5
Incr Delay (d2), s/veh	1.0	0.0	11.1	2.0	0.0	0.0	1.7	1.7	1.6	1.0	3.8	3.8
Initial Q Delay(d3),s/veh	0.0	0.0	0.0	0.0	0.0	0.0	0.0	0.0	0.0	0.0	0.0	0.0
%ile BackOfQ(50%),veh/ln	2.9	0.0	5.4	2.6	0.0	0.0	1.4	4.6	4.8	0.4	7.1	7.2
Unsig. Movement Delay, s/veh												
LnGrp Delay(d),s/veh	31.3	0.0	43.9	35.8	0.0	0.0	39.5	19.7	19.7	40.3	25.4	25.3
LnGrp LOS	C	A	D	D	A	A	D	B	B	D	C	C
Approach Vol, veh/h		397			134			753			895	
Approach Delay, s/veh		38.8			35.8			21.6			25.7	
Approach LOS		D			D			C			C	

Timer - Assigned Phs	1	2		4	5	6		8
Phs Duration (G+Y+Rc), s	10.4	36.7		16.1	7.7	39.4		20.3
Change Period (Y+Rc), s	* 4.7	5.4		* 4.7	* 4.7	5.4		4.7
Max Green Setting (Gmax), s	* 11	42.4		* 26	* 8.3	44.6		21.3
Max Q Clear Time (g_c+I1), s	15.3	18.8		8.0	2.9	13.5		14.6
Green Ext Time (p_c), s	0.0	12.5		0.6	0.0	11.0		1.0

Intersection Summary	
HCM 6th Ctrl Delay	27.3
HCM 6th LOS	C

Notes

* HCM 6th computational engine requires equal clearance times for the phases crossing the barrier.



Movement	EBL	EBT	EBR	WBL	WBT	WBR	NBL	NBT	NBR	SBL	SBT	SBR
Lane Configurations												
Traffic Volume (veh/h)	99	58	237	75	63	53	192	517	40	58	719	90
Future Volume (veh/h)	99	58	237	75	63	53	192	517	40	58	719	90
Initial Q (Qb), veh	0	0	0	0	0	0	0	0	0	0	0	0
Ped-Bike Adj(A_pbT)	1.00		0.97	0.99		0.96	1.00		0.96	1.00		0.97
Parking Bus, Adj	1.00	1.00	1.00	1.00	1.00	1.00	1.00	1.00	1.00	1.00	1.00	1.00
Work Zone On Approach		No			No			No			No	
Adj Sat Flow, veh/h/ln	1870	1870	1870	1870	1870	1870	1870	1870	1870	1870	1870	1870
Adj Flow Rate, veh/h	110	64	263	87	73	62	206	556	43	62	765	96
Peak Hour Factor	0.90	0.90	0.90	0.86	0.86	0.86	0.93	0.93	0.93	0.94	0.94	0.94
Percent Heavy Veh, %	2	2	2	2	2	2	2	2	2	2	2	2
Cap, veh/h	139	669	552	155	123	86	245	1342	104	80	982	123
Arrive On Green	0.08	0.36	0.36	0.22	0.22	0.22	0.14	0.40	0.40	0.04	0.31	0.31
Sat Flow, veh/h	1781	1870	1543	457	566	397	1781	3331	257	1781	3165	397
Grp Volume(v), veh/h	110	64	263	222	0	0	206	296	303	62	429	432
Grp Sat Flow(s),veh/h/ln	1781	1870	1543	1420	0	0	1781	1777	1811	1781	1777	1785
Q Serve(g_s), s	5.5	2.0	11.9	9.9	0.0	0.0	10.1	10.7	10.8	3.1	19.7	19.8
Cycle Q Clear(g_c), s	5.5	2.0	11.9	12.7	0.0	0.0	10.1	10.7	10.8	3.1	19.7	19.8
Prop In Lane	1.00		1.00	0.39		0.28	1.00		0.14	1.00		0.22
Lane Grp Cap(c), veh/h	139	669	552	364	0	0	245	716	730	80	551	554
V/C Ratio(X)	0.79	0.10	0.48	0.61	0.00	0.00	0.84	0.41	0.42	0.78	0.78	0.78
Avail Cap(c_a), veh/h	208	1022	843	569	0	0	365	868	885	188	692	695
HCM Platoon Ratio	1.00	1.00	1.00	1.00	1.00	1.00	1.00	1.00	1.00	1.00	1.00	1.00
Upstream Filter(I)	1.00	1.00	1.00	1.00	0.00	0.00	1.00	1.00	1.00	1.00	1.00	1.00
Uniform Delay (d), s/veh	40.7	19.2	22.3	32.2	0.0	0.0	37.8	19.2	19.2	42.5	28.2	28.2
Incr Delay (d2), s/veh	6.1	0.0	0.2	0.6	0.0	0.0	10.7	0.5	0.5	5.9	5.2	5.2
Initial Q Delay(d3),s/veh	0.0	0.0	0.0	0.0	0.0	0.0	0.0	0.0	0.0	0.0	0.0	0.0
%ile BackOfQ(50%),veh/ln	2.6	0.9	4.2	4.4	0.0	0.0	5.1	4.4	4.5	1.5	8.9	9.0
Unsig. Movement Delay, s/veh												
LnGrp Delay(d),s/veh	46.8	19.2	22.6	32.8	0.0	0.0	48.5	19.8	19.8	48.4	33.4	33.4
LnGrp LOS	D	B	C	C	A	A	D	B	B	D	C	C
Approach Vol, veh/h		437			222			805			923	
Approach Delay, s/veh		28.2			32.8			27.1			34.4	
Approach LOS		C			C			C			C	

Timer - Assigned Phs	1	2		4	5	6	7	8
Phs Duration (G+Y+Rc), s	9.6	41.9		38.3	18.0	33.6	12.6	25.7
Change Period (Y+Rc), s	5.6	5.7		6.2	5.6	5.7	5.6	6.2
Max Green Setting (Gmax), s	9.5	43.9		49.1	18.4	35.0	10.5	33.0
Max Q Clear Time (g_c+I1), s	5.1	12.8		13.9	12.1	21.8	7.5	14.7
Green Ext Time (p_c), s	0.0	5.8		0.7	0.3	6.1	0.0	0.9

Intersection Summary		
HCM 6th Ctrl Delay		30.7
HCM 6th LOS		C



Movement	EBL	EBT	EBR	WBL	WBT	WBR	NBL	NBT	NBR	SBL	SBT	SBR
Lane Configurations												
Traffic Volume (veh/h)	0	0	0	204	2	270	191	743	0	0	1013	98
Future Volume (veh/h)	0	0	0	204	2	270	191	743	0	0	1013	98
Initial Q (Qb), veh				0	0	0	0	0	0	0	0	0
Ped-Bike Adj(A_pbT)				1.00		0.97	1.00		1.00	1.00		0.96
Parking Bus, Adj				1.00	1.00	1.00	1.00	1.00	1.00	1.00	1.00	1.00
Work Zone On Approach					No			No			No	
Adj Sat Flow, veh/h/ln				1870	1870	1870	1870	1870	0	0	1870	1870
Adj Flow Rate, veh/h				219	2	290	258	1004	0	0	1151	111
Peak Hour Factor				0.93	0.93	0.93	0.74	0.74	0.74	0.88	0.88	0.88
Percent Heavy Veh, %				2	2	2	2	2	0	0	2	2
Cap, veh/h				425	4	368	292	2321	0	0	1441	139
Arrive On Green				0.24	0.24	0.24	0.16	0.65	0.00	0.00	0.44	0.44
Sat Flow, veh/h				1766	16	1532	1781	3647	0	0	3355	314
Grp Volume(v), veh/h				221	0	290	258	1004	0	0	626	636
Grp Sat Flow(s),veh/h/ln				1782	0	1532	1781	1777	0	0	1777	1799
Q Serve(g_s), s				10.6	0.0	17.5	14.0	13.5	0.0	0.0	30.0	30.1
Cycle Q Clear(g_c), s				10.6	0.0	17.5	14.0	13.5	0.0	0.0	30.0	30.1
Prop In Lane				0.99		1.00	1.00		0.00	0.00		0.17
Lane Grp Cap(c), veh/h				429	0	368	292	2321	0	0	785	795
V/C Ratio(X)				0.52	0.00	0.79	0.89	0.43	0.00	0.00	0.80	0.80
Avail Cap(c_a), veh/h				670	0	576	388	2608	0	0	832	842
HCM Platoon Ratio				1.00	1.00	1.00	1.00	1.00	1.00	1.00	1.00	1.00
Upstream Filter(I)				1.00	0.00	1.00	1.00	1.00	0.00	0.00	1.00	1.00
Uniform Delay (d), s/veh				32.5	0.0	35.1	40.3	8.3	0.0	0.0	23.7	23.8
Incr Delay (d2), s/veh				1.0	0.0	3.8	14.3	0.5	0.0	0.0	7.5	7.5
Initial Q Delay(d3),s/veh				0.0	0.0	0.0	0.0	0.0	0.0	0.0	0.0	0.0
%ile BackOfQ(50%),veh/ln				4.6	0.0	6.8	7.1	4.5	0.0	0.0	13.2	13.4
Unsig. Movement Delay, s/veh												
LnGrp Delay(d),s/veh				33.4	0.0	38.9	54.6	8.7	0.0	0.0	31.2	31.3
LnGrp LOS				C	A	D	D	A	A	A	C	C
Approach Vol, veh/h					511			1262			1262	
Approach Delay, s/veh					36.6			18.1			31.2	
Approach LOS					D			B			C	

Timer - Assigned Phs	1	2		4		6						
Phs Duration (G+Y+Rc), s	20.8	49.0		28.8		69.8						
Change Period (Y+Rc), s	* 4.7	5.4		5.1		5.4						
Max Green Setting (Gmax), s	* 23	46.2		37.1		72.4						
Max Q Clear Time (g_c+I1), s	16.0	32.1		19.5		15.5						
Green Ext Time (p_c), s	0.2	11.5		2.2		24.3						

Intersection Summary	
HCM 6th Ctrl Delay	26.7
HCM 6th LOS	C

Notes

* HCM 6th computational engine requires equal clearance times for the phases crossing the barrier.



Movement	EBL	EBT	EBR	WBL	WBT	WBR	NBL	NBT	NBR	SBL	SBT	SBR
Lane Configurations												
Traffic Volume (veh/h)	71	3	249	0	0	0	0	861	302	383	834	0
Future Volume (veh/h)	71	3	249	0	0	0	0	861	302	383	834	0
Initial Q (Qb), veh	0	0	0				0	0	0	0	0	0
Ped-Bike Adj(A_pbT)	1.00		0.97				1.00		0.96	1.00		1.00
Parking Bus, Adj	1.00	1.00	1.00				1.00	1.00	1.00	1.00	1.00	1.00
Work Zone On Approach		No						No			No	
Adj Sat Flow, veh/h/ln	1870	1870	1870				0	1870	1870	1870	1870	0
Adj Flow Rate, veh/h	88	4	307				0	1076	378	461	1005	0
Peak Hour Factor	0.81	0.81	0.81				0.80	0.80	0.80	0.83	0.83	0.83
Percent Heavy Veh, %	2	2	2				0	2	2	2	2	0
Cap, veh/h	83	4	291				0	1257	536	489	2378	0
Arrive On Green	0.24	0.24	0.24				0.00	0.35	0.35	0.27	0.67	0.00
Sat Flow, veh/h	349	16	1219				0	3647	1515	1781	3647	0
Grp Volume(v), veh/h	399	0	0				0	1076	378	461	1005	0
Grp Sat Flow(s),veh/h/ln	1584	0	0				0	1777	1515	1781	1777	0
Q Serve(g_s), s	27.3	0.0	0.0				0.0	32.1	24.6	29.0	14.9	0.0
Cycle Q Clear(g_c), s	27.3	0.0	0.0				0.0	32.1	24.6	29.0	14.9	0.0
Prop In Lane	0.22		0.77				0.00		1.00	1.00		0.00
Lane Grp Cap(c), veh/h	378	0	0				0	1257	536	489	2378	0
V/C Ratio(X)	1.05	0.00	0.00				0.00	0.86	0.71	0.94	0.42	0.00
Avail Cap(c_a), veh/h	378	0	0				0	1281	546	566	2556	0
HCM Platoon Ratio	1.00	1.00	1.00				1.00	1.00	1.00	1.00	1.00	1.00
Upstream Filter(I)	1.00	0.00	0.00				0.00	1.00	1.00	1.00	1.00	0.00
Uniform Delay (d), s/veh	43.5	0.0	0.0				0.0	34.2	31.8	40.6	8.7	0.0
Incr Delay (d2), s/veh	61.3	0.0	0.0				0.0	7.1	6.7	21.8	0.4	0.0
Initial Q Delay(d3),s/veh	0.0	0.0	0.0				0.0	0.0	0.0	0.0	0.0	0.0
%ile BackOfQ(50%),veh/ln	17.0	0.0	0.0				0.0	14.5	9.6	15.2	5.2	0.0
Unsig. Movement Delay, s/veh												
LnGrp Delay(d),s/veh	104.8	0.0	0.0				0.0	41.4	38.5	62.4	9.2	0.0
LnGrp LOS	F	A	A				A	D	D	E	A	A
Approach Vol, veh/h		399						1454			1466	
Approach Delay, s/veh		104.8						40.6			25.9	
Approach LOS		F						D			C	

Timer - Assigned Phs	2		5	6		8
Phs Duration (G+Y+Rc), s	81.9		36.1	45.8		32.4
Change Period (Y+Rc), s	5.4		* 4.7	5.4		5.1
Max Green Setting (Gmax), s	82.2		* 36	41.2		27.3
Max Q Clear Time (g_c+I1), s	16.9		31.0	34.1		29.3
Green Ext Time (p_c), s	25.6		0.4	6.3		0.0

Intersection Summary	
HCM 6th Ctrl Delay	41.8
HCM 6th LOS	D

Notes

* HCM 6th computational engine requires equal clearance times for the phases crossing the barrier.



Movement	EBL	EBT	EBR	WBL	WBT	WBR	NBL	NBT	NBR	SBL	SBT	SBR
Lane Configurations												
Traffic Volume (veh/h)	0	0	0	151	6	60	0	578	309	0	708	69
Future Volume (veh/h)	0	0	0	151	6	60	0	578	309	0	708	69
Initial Q (Qb), veh				0	0	0	0	0	0	0	0	0
Ped-Bike Adj(A_pbT)				1.00		0.96	1.00		0.96	1.00		0.96
Parking Bus, Adj				1.00	1.00	1.00	1.00	1.00	1.00	1.00	1.00	1.00
Work Zone On Approach					No			No			No	
Adj Sat Flow, veh/h/ln				1870	1870	1870	0	1870	1870	0	1870	1870
Adj Flow Rate, veh/h				189	8	75	0	622	332	0	843	82
Peak Hour Factor				0.80	0.80	0.80	0.93	0.93	0.93	0.84	0.84	0.84
Percent Heavy Veh, %				2	2	2	0	2	2	0	2	2
Cap, veh/h				373	16	333	0	1561	669	0	2070	200
Arrive On Green				0.22	0.22	0.22	0.00	0.44	0.44	0.00	0.44	0.44
Sat Flow, veh/h				1712	72	1529	0	3647	1522	0	4882	456
Grp Volume(v), veh/h				197	0	75	0	622	332	0	607	318
Grp Sat Flow(s),veh/h/ln				1785	0	1529	0	1777	1522	0	1702	1766
Q Serve(g_s), s				3.5	0.0	1.5	0.0	4.3	5.7	0.0	4.4	4.5
Cycle Q Clear(g_c), s				3.5	0.0	1.5	0.0	4.3	5.7	0.0	4.4	4.5
Prop In Lane				0.96		1.00	0.00		1.00	0.00		0.26
Lane Grp Cap(c), veh/h				389	0	333	0	1561	669	0	1495	776
V/C Ratio(X)				0.51	0.00	0.23	0.00	0.40	0.50	0.00	0.41	0.41
Avail Cap(c_a), veh/h				2297	0	1967	0	5909	2532	0	5660	2937
HCM Platoon Ratio				1.00	1.00	1.00	1.00	1.00	1.00	1.00	1.00	1.00
Upstream Filter(I)				1.00	0.00	1.00	0.00	1.00	1.00	0.00	1.00	1.00
Uniform Delay (d), s/veh				12.5	0.0	11.7	0.0	6.9	7.3	0.0	7.0	7.0
Incr Delay (d2), s/veh				1.0	0.0	0.3	0.0	0.2	0.6	0.0	0.2	0.3
Initial Q Delay(d3),s/veh				0.0	0.0	0.0	0.0	0.0	0.0	0.0	0.0	0.0
%ile BackOfQ(50%),veh/ln				1.2	0.0	0.4	0.0	0.9	1.1	0.0	0.9	1.0
Unsig. Movement Delay, s/veh												
LnGrp Delay(d),s/veh				13.6	0.0	12.1	0.0	7.1	7.9	0.0	7.2	7.3
LnGrp LOS				B	A	B	A	A	A	A	A	A
Approach Vol, veh/h					272			954			925	
Approach Delay, s/veh					13.1			7.4			7.2	
Approach LOS					B			A			A	

Timer - Assigned Phs	2		6		8			
Phs Duration (G+Y+Rc), s	22.4		22.4		14.0			
Change Period (Y+Rc), s	6.4		6.4		6.1			
Max Green Setting (Gmax), s	60.6		60.6		46.9			
Max Q Clear Time (g_c+I1), s	7.7		6.5		5.5			
Green Ext Time (p_c), s	6.0		6.9		1.5			

Intersection Summary								
HCM 6th Ctrl Delay	8.0							
HCM 6th LOS	A							



Movement	EBL	EBT	EBR	WBL	WBT	WBR	NBL	NBT	NBR	SBL	SBT	SBR
Lane Configurations												
Traffic Volume (veh/h)	48	2	383	0	0	0	0	839	211	121	738	0
Future Volume (veh/h)	48	2	383	0	0	0	0	839	211	121	738	0
Initial Q (Qb), veh	0	0	0				0	0	0	0	0	0
Ped-Bike Adj(A_pbT)	1.00		0.95				1.00		0.96	1.00		1.00
Parking Bus, Adj	1.00	1.00	1.00				1.00	1.00	1.00	1.00	1.00	1.00
Work Zone On Approach		No						No			No	
Adj Sat Flow, veh/h/ln	1870	1870	1870				0	1870	1870	1870	1870	0
Adj Flow Rate, veh/h	56	2	445				0	883	222	134	820	0
Peak Hour Factor	0.86	0.86	0.86				0.95	0.95	0.95	0.90	0.90	0.90
Percent Heavy Veh, %	2	2	2				0	2	2	2	2	0
Cap, veh/h	424	15	650				0	1311	560	175	1979	0
Arrive On Green	0.25	0.25	0.25				0.00	0.37	0.37	0.10	0.56	0.00
Sat Flow, veh/h	1723	62	2637				0	3647	1517	1781	3647	0
Grp Volume(v), veh/h	58	0	445				0	883	222	134	820	0
Grp Sat Flow(s),veh/h/ln	1784	0	1319				0	1777	1517	1781	1777	0
Q Serve(g_s), s	1.6	0.0	9.7				0.0	13.3	6.9	4.7	8.4	0.0
Cycle Q Clear(g_c), s	1.6	0.0	9.7				0.0	13.3	6.9	4.7	8.4	0.0
Prop In Lane	0.97		1.00				0.00		1.00	1.00		0.00
Lane Grp Cap(c), veh/h	440	0	650				0	1311	560	175	1979	0
V/C Ratio(X)	0.13	0.00	0.68				0.00	0.67	0.40	0.76	0.41	0.00
Avail Cap(c_a), veh/h	1007	0	1489				0	2605	1112	541	4002	0
HCM Platoon Ratio	1.00	1.00	1.00				1.00	1.00	1.00	1.00	1.00	1.00
Upstream Filter(I)	1.00	0.00	1.00				0.00	1.00	1.00	1.00	1.00	0.00
Uniform Delay (d), s/veh	18.7	0.0	21.7				0.0	16.8	14.8	27.9	8.1	0.0
Incr Delay (d2), s/veh	0.1	0.0	1.3				0.0	0.6	0.5	6.8	0.1	0.0
Initial Q Delay(d3),s/veh	0.0	0.0	0.0				0.0	0.0	0.0	0.0	0.0	0.0
%ile BackOfQ(50%),veh/ln	0.6	0.0	2.9				0.0	4.7	2.1	2.2	2.4	0.0
Unsig. Movement Delay, s/veh												
LnGrp Delay(d),s/veh	18.8	0.0	23.0				0.0	17.5	15.3	34.7	8.2	0.0
LnGrp LOS	B	A	C				A	B	B	C	A	A
Approach Vol, veh/h		503						1105			954	
Approach Delay, s/veh		22.5						17.0			12.0	
Approach LOS		C						B			B	

Timer - Assigned Phs	1	2		4		6						
Phs Duration (G+Y+Rc), s	12.0	29.9		21.8		41.8						
Change Period (Y+Rc), s	* 5.7	6.4		6.1		6.4						
Max Green Setting (Gmax), s	* 13	46.6		35.9		71.6						
Max Q Clear Time (g_c+I1), s	10.7	15.3		11.7		10.4						
Green Ext Time (p_c), s	0.2	7.7		2.3		6.4						

Intersection Summary	
HCM 6th Ctrl Delay	16.2
HCM 6th LOS	B

Notes

* HCM 6th computational engine requires equal clearance times for the phases crossing the barrier.



Movement	EBL	EBT	EBR	WBL	WBT	WBR	NBL	NBT	NBR	SBL	SBT	SBR
Lane Configurations												
Traffic Volume (veh/h)	41	73	32	3	108	79	28	39	3	108	107	35
Future Volume (veh/h)	41	73	32	3	108	79	28	39	3	108	107	35
Initial Q (Qb), veh	0	0	0	0	0	0	0	0	0	0	0	0
Ped-Bike Adj(A_pbT)	1.00		0.96	1.00		0.95	1.00		0.98	1.00		0.96
Parking Bus, Adj	1.00	1.00	1.00	1.00	1.00	1.00	1.00	1.00	1.00	1.00	1.00	1.00
Work Zone On Approach		No			No			No			No	
Adj Sat Flow, veh/h/ln	1870	1870	1870	1870	1870	1870	1870	1870	1870	1870	1870	1870
Adj Flow Rate, veh/h	46	82	36	3	119	87	41	57	4	116	115	38
Peak Hour Factor	0.89	0.89	0.89	0.91	0.91	0.91	0.69	0.69	0.69	0.93	0.93	0.93
Percent Heavy Veh, %	2	2	2	2	2	2	2	2	2	2	2	2
Cap, veh/h	76	353	288	7	281	227	70	1566	682	149	1275	401
Arrive On Green	0.04	0.19	0.19	0.00	0.15	0.15	0.04	0.44	0.44	0.08	0.48	0.48
Sat Flow, veh/h	1781	1870	1523	1781	1870	1512	1781	3554	1548	1781	2632	828
Grp Volume(v), veh/h	46	82	36	3	119	87	41	57	4	116	76	77
Grp Sat Flow(s),veh/h/ln	1781	1870	1523	1781	1870	1512	1781	1777	1548	1781	1777	1683
Q Serve(g_s), s	1.7	2.5	1.3	0.1	4.0	3.6	1.6	0.6	0.1	4.4	1.6	1.7
Cycle Q Clear(g_c), s	1.7	2.5	1.3	0.1	4.0	3.6	1.6	0.6	0.1	4.4	1.6	1.7
Prop In Lane	1.00		1.00	1.00		1.00	1.00		1.00	1.00		0.49
Lane Grp Cap(c), veh/h	76	353	288	7	281	227	70	1566	682	149	861	815
V/C Ratio(X)	0.61	0.23	0.13	0.42	0.42	0.38	0.58	0.04	0.01	0.78	0.09	0.09
Avail Cap(c_a), veh/h	177	983	800	130	934	755	166	1566	682	270	861	815
HCM Platoon Ratio	1.00	1.00	1.00	1.00	1.00	1.00	1.00	1.00	1.00	1.00	1.00	1.00
Upstream Filter(I)	1.00	1.00	1.00	1.00	1.00	1.00	1.00	1.00	1.00	1.00	1.00	1.00
Uniform Delay (d), s/veh	32.2	23.6	23.1	34.0	26.4	26.2	32.4	10.9	10.7	30.8	9.5	9.5
Incr Delay (d2), s/veh	2.9	0.3	0.2	13.6	1.0	1.1	2.8	0.0	0.0	3.3	0.2	0.2
Initial Q Delay(d3),s/veh	0.0	0.0	0.0	0.0	0.0	0.0	0.0	0.0	0.0	0.0	0.0	0.0
%ile BackOfQ(50%),veh/ln	0.8	1.1	0.5	0.1	1.8	1.3	0.7	0.2	0.0	1.9	0.6	0.6
Unsig. Movement Delay, s/veh												
LnGrp Delay(d),s/veh	35.1	23.9	23.3	47.6	27.4	27.3	35.2	10.9	10.8	34.1	9.7	9.8
LnGrp LOS	D	C	C	D	C	C	D	B	B	C	A	A
Approach Vol, veh/h		164			209			102			269	
Approach Delay, s/veh		26.9			27.7			20.7			20.3	
Approach LOS		C			C			C			C	

Timer - Assigned Phs	1	2	3	4	5	6	7	8
Phs Duration (G+Y+Rc), s	7.3	38.3	7.5	15.4	10.3	35.3	4.9	18.0
Change Period (Y+Rc), s	4.6	5.1	4.6	5.1	4.6	5.1	4.6	5.1
Max Green Setting (Gmax), s	6.4	33.2	6.8	34.2	10.4	29.2	5.0	36.0
Max Q Clear Time (g_c+I1), s	3.6	3.7	3.7	6.0	6.4	2.6	2.1	4.5
Green Ext Time (p_c), s	0.0	1.2	0.0	1.0	0.0	0.4	0.0	0.5

Intersection Summary	
HCM 6th Ctrl Delay	23.9
HCM 6th LOS	C



Movement	EBL	EBT	EBR	WBL	WBT	WBR	NBL	NBT	NBR	SBL	SBT	SBR
Lane Configurations												
Traffic Volume (veh/h)	212	77	142	71	70	324	145	467	58	416	474	158
Future Volume (veh/h)	212	77	142	71	70	324	145	467	58	416	474	158
Initial Q (Qb), veh	0	0	0	0	0	0	0	0	0	0	0	0
Ped-Bike Adj(A_pbT)	1.00		0.96	1.00		0.97	1.00		0.96	1.00		0.97
Parking Bus, Adj	1.00	1.00	1.00	1.00	1.00	1.00	1.00	1.00	1.00	1.00	1.00	1.00
Work Zone On Approach		No			No			No			No	
Adj Sat Flow, veh/h/ln	1870	1870	1870	1870	1870	1870	1870	1870	1870	1870	1870	1870
Adj Flow Rate, veh/h	238	87	160	96	95	438	196	631	78	489	558	186
Peak Hour Factor	0.89	0.89	0.89	0.74	0.74	0.74	0.74	0.74	0.74	0.85	0.85	0.85
Percent Heavy Veh, %	2	2	2	2	2	2	2	2	2	2	2	2
Cap, veh/h	306	322	261	446	468	653	219	690	85	302	700	232
Arrive On Green	0.17	0.17	0.17	0.25	0.25	0.25	0.12	0.22	0.22	0.17	0.27	0.27
Sat Flow, veh/h	1781	1870	1519	1781	1870	1534	1781	3169	391	1781	2597	862
Grp Volume(v), veh/h	238	87	160	96	95	438	196	353	356	489	381	363
Grp Sat Flow(s),veh/h/ln	1781	1870	1519	1781	1870	1534	1781	1777	1783	1781	1777	1683
Q Serve(g_s), s	17.8	5.6	13.6	5.9	5.6	32.3	15.1	27.0	27.1	23.6	27.8	28.0
Cycle Q Clear(g_c), s	17.8	5.6	13.6	5.9	5.6	32.3	15.1	27.0	27.1	23.6	27.8	28.0
Prop In Lane	1.00		1.00	1.00		1.00	1.00		0.22	1.00		0.51
Lane Grp Cap(c), veh/h	306	322	261	446	468	653	219	387	388	302	479	454
V/C Ratio(X)	0.78	0.27	0.61	0.22	0.20	0.67	0.90	0.91	0.92	1.62	0.80	0.80
Avail Cap(c_a), veh/h	422	443	360	461	484	665	219	394	396	302	489	463
HCM Platoon Ratio	1.00	1.00	1.00	1.00	1.00	1.00	1.00	1.00	1.00	1.00	1.00	1.00
Upstream Filter(I)	1.00	1.00	1.00	1.00	1.00	1.00	1.00	1.00	1.00	1.00	1.00	1.00
Uniform Delay (d), s/veh	55.1	50.1	53.3	41.3	41.2	32.8	60.2	53.2	53.2	57.8	47.3	47.4
Incr Delay (d2), s/veh	7.5	0.6	3.3	0.1	0.1	2.1	33.5	27.4	27.8	293.6	11.8	12.6
Initial Q Delay(d3),s/veh	0.0	0.0	0.0	0.0	0.0	0.0	0.0	0.0	0.0	0.0	0.0	0.0
%ile BackOfQ(50%),veh/ln	8.5	2.7	5.4	2.6	2.6	12.1	8.8	14.8	15.0	35.1	13.7	13.1
Unsig. Movement Delay, s/veh												
LnGrp Delay(d),s/veh	62.6	50.7	56.6	41.4	41.3	34.9	93.7	80.6	81.1	351.4	59.0	60.0
LnGrp LOS	E	D	E	D	D	C	F	F	F	F	E	E
Approach Vol, veh/h		485			629			905			1233	
Approach Delay, s/veh		58.5			36.8			83.6			175.3	
Approach LOS		E			D			F			F	

Timer - Assigned Phs	1	2		4	5	6		8
Phs Duration (G+Y+Rc), s	21.8	44.8		41.3	29.0	37.6		31.3
Change Period (Y+Rc), s	4.7	* 7.3		6.4	5.4	7.3		7.4
Max Green Setting (Gmax), s	17.1	* 38		36.0	23.6	30.9		33.0
Max Q Clear Time (g_c+I1), s	7.9	30.0		34.3	25.6	29.1		19.8
Green Ext Time (p_c), s	0.0	5.1		0.3	0.0	1.2		2.2

Intersection Summary	
HCM 6th Ctrl Delay	105.6
HCM 6th LOS	F

Notes

* HCM 6th computational engine requires equal clearance times for the phases crossing the barrier.

Intersection	
Int Delay, s/veh	0.4

Movement	EBL	EBR	NBL	NBT	SBT	SBR
Lane Configurations						
Traffic Vol, veh/h	7	125	47	400	505	7
Future Vol, veh/h	7	125	47	400	505	7
Conflicting Peds, #/hr	10	10	10	0	0	10
Sign Control	Free	Free	Free	Free	Stop	Stop
RT Channelized	-	None	-	None	-	None
Storage Length	0	-	-	-	-	-
Veh in Median Storage, #	2	-	-	0	0	-
Grade, %	0	-	-	0	0	-
Peak Hour Factor	85	85	85	85	73	73
Heavy Vehicles, %	2	2	2	2	2	2
Mvmt Flow	8	147	55	471	692	10

Major/Minor	Major1		Minor2	
Conflicting Flow All	10	0	591	20
Stage 1	-	-	10	-
Stage 2	-	-	581	-
Critical Hdwy	4.14	-	6.54	6.94
Critical Hdwy Stg 1	-	-	-	-
Critical Hdwy Stg 2	-	-	5.54	-
Follow-up Hdwy	2.22	-	4.02	3.32
Pot Cap-1 Maneuver	1608	-	~ 418	1053
Stage 1	-	-	-	-
Stage 2	-	-	~ 498	-
Platoon blocked, %		-		
Mov Cap-1 Maneuver	1593	-	0	1033
Mov Cap-2 Maneuver	-	-	0	-
Stage 1	-	-	0	-
Stage 2	-	-	0	-

Approach	NB	SB
HCM Control Delay, s	0.9	
HCM LOS		-

Minor Lane/Major Mvmt	NBL	NBT	SBLn1	SBLn2
Capacity (veh/h)	1593	-	-	1033
HCM Lane V/C Ratio	0.035	-	-	0.344
HCM Control Delay (s)	7.3	0.1	-	10.3
HCM Lane LOS	A	A	-	B
HCM 95th %tile Q(veh)	0.1	-	-	1.5

Notes			
~: Volume exceeds capacity	$: Delay exceeds 300s	+: Computation Not Defined	*: All major volume in platoon



Movement	WBL	WBR	NBT	NBR	SBL	SBT
Lane Configurations						
Traffic Volume (veh/h)	108	227	256	62	198	452
Future Volume (veh/h)	108	227	256	62	198	452
Initial Q (Qb), veh	0	0	0	0	0	0
Ped-Bike Adj(A_pbT)	1.00	1.00		0.94	1.00	
Parking Bus, Adj	1.00	1.00	1.00	1.00	1.00	1.00
Work Zone On Approach	No		No			No
Adj Sat Flow, veh/h/ln	1870	1870	1870	1870	1870	1870
Adj Flow Rate, veh/h	200	420	278	67	213	486
Peak Hour Factor	0.54	0.54	0.92	0.92	0.93	0.93
Percent Heavy Veh, %	2	2	2	2	2	2
Cap, veh/h	558	496	682	160	264	869
Arrive On Green	0.31	0.31	0.24	0.24	0.15	0.46
Sat Flow, veh/h	1781	1585	2912	664	1781	1870
Grp Volume(v), veh/h	200	420	173	172	213	486
Grp Sat Flow(s),veh/h/ln	1781	1585	1777	1705	1781	1870
Q Serve(g_s), s	5.5	15.6	5.1	5.4	7.3	11.8
Cycle Q Clear(g_c), s	5.5	15.6	5.1	5.4	7.3	11.8
Prop In Lane	1.00	1.00		0.39	1.00	
Lane Grp Cap(c), veh/h	558	496	430	412	264	869
V/C Ratio(X)	0.36	0.85	0.40	0.42	0.81	0.56
Avail Cap(c_a), veh/h	1521	1353	1134	1088	1055	2482
HCM Platoon Ratio	1.00	1.00	1.00	1.00	1.00	1.00
Upstream Filter(I)	1.00	1.00	1.00	1.00	1.00	1.00
Uniform Delay (d), s/veh	16.7	20.2	20.1	20.1	26.0	12.2
Incr Delay (d2), s/veh	0.4	4.1	2.2	2.4	2.2	2.0
Initial Q Delay(d3),s/veh	0.0	0.0	0.0	0.0	0.0	0.0
%ile BackOfQ(50%),veh/ln	2.0	0.6	2.2	2.2	3.0	4.4
Unsig. Movement Delay, s/veh						
LnGrp Delay(d),s/veh	17.1	24.3	22.3	22.6	28.2	14.2
LnGrp LOS	B	C	C	C	C	B
Approach Vol, veh/h	620		345			699
Approach Delay, s/veh	22.0		22.4			18.5
Approach LOS	C		C			B

Timer - Assigned Phs		2		4	5	6
Phs Duration (G+Y+Rc), s		37.1		25.9	14.0	23.0
Change Period (Y+Rc), s		* 7.8		6.2	* 4.7	7.8
Max Green Setting (Gmax), s		* 84		53.8	* 37	40.2
Max Q Clear Time (g_c+I1), s		13.8		17.6	9.3	7.4
Green Ext Time (p_c), s		9.6		2.1	0.3	5.2

Intersection Summary	
HCM 6th Ctrl Delay	20.6
HCM 6th LOS	C

Notes

* HCM 6th computational engine requires equal clearance times for the phases crossing the barrier.

Intersection	
Int Delay, s/veh	1.6

Movement	EBT	EBR	WBL	WBT	NBL	NBR
Lane Configurations						
Traffic Vol, veh/h	326	41	47	219	15	42
Future Vol, veh/h	326	41	47	219	15	42
Conflicting Peds, #/hr	0	10	10	0	10	10
Sign Control	Free	Free	Free	Free	Stop	Stop
RT Channelized	-	None	-	None	-	None
Storage Length	-	-	-	-	0	-
Veh in Median Storage, #	0	-	-	0	0	-
Grade, %	0	-	-	0	0	-
Peak Hour Factor	67	67	91	91	86	86
Heavy Vehicles, %	2	2	2	2	2	2
Mvmt Flow	487	61	52	241	17	49

Major/Minor	Major1		Major2		Minor1	
Conflicting Flow All	0	0	558	0	883	538
Stage 1	-	-	-	-	528	-
Stage 2	-	-	-	-	355	-
Critical Hdwy	-	-	4.12	-	6.42	6.22
Critical Hdwy Stg 1	-	-	-	-	5.42	-
Critical Hdwy Stg 2	-	-	-	-	5.42	-
Follow-up Hdwy	-	-	2.218	-	3.518	3.318
Pot Cap-1 Maneuver	-	-	1013	-	316	543
Stage 1	-	-	-	-	592	-
Stage 2	-	-	-	-	710	-
Platoon blocked, %	-	-		-		
Mov Cap-1 Maneuver	-	-	1003	-	291	533
Mov Cap-2 Maneuver	-	-	-	-	291	-
Stage 1	-	-	-	-	586	-
Stage 2	-	-	-	-	661	-

Approach	EB	WB	NB
HCM Control Delay, s	0	1.6	14.7
HCM LOS			B

Minor Lane/Major Mvmt	NBLn1	EBT	EBR	WBL	WBT
Capacity (veh/h)	437	-	-	1003	-
HCM Lane V/C Ratio	0.152	-	-	0.051	-
HCM Control Delay (s)	14.7	-	-	8.8	0
HCM Lane LOS	B	-	-	A	A
HCM 95th %tile Q(veh)	0.5	-	-	0.2	-

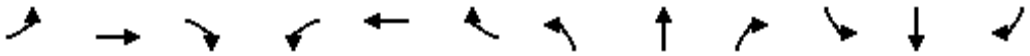

Movement	EBL	EBT	EBR	WBL	WBT	WBR	NBL	NBT	NBR	SBL	SBT	SBR
Lane Configurations												
Traffic Volume (veh/h)	86	194	87	41	106	188	96	367	35	276	458	63
Future Volume (veh/h)	86	194	87	41	106	188	96	367	35	276	458	63
Initial Q (Qb), veh	0	0	0	0	0	0	0	0	0	0	0	0
Ped-Bike Adj(A_pbT)	1.00		0.97	1.00		1.00	1.00		0.96	1.00		0.97
Parking Bus, Adj	1.00	1.00	1.00	1.00	1.00	1.00	1.00	1.00	1.00	1.00	1.00	1.00
Work Zone On Approach		No			No			No			No	
Adj Sat Flow, veh/h/ln	1870	1870	1870	1870	1870	1870	1870	1870	1870	1870	1870	1870
Adj Flow Rate, veh/h	126	285	128	46	118	0	98	374	36	294	487	67
Peak Hour Factor	0.68	0.68	0.68	0.90	0.90	0.90	0.98	0.98	0.98	0.94	0.94	0.94
Percent Heavy Veh, %	2	2	2	2	2	2	2	2	2	2	2	2
Cap, veh/h	165	559	243	77	658		129	753	324	358	1065	146
Arrive On Green	0.09	0.23	0.23	0.04	0.19	0.00	0.07	0.21	0.21	0.20	0.34	0.34
Sat Flow, veh/h	1781	2381	1037	1781	3554	1585	1781	3554	1528	1781	3128	428
Grp Volume(v), veh/h	126	210	203	46	118	0	98	374	36	294	276	278
Grp Sat Flow(s),veh/h/ln	1781	1777	1641	1781	1777	1585	1781	1777	1528	1781	1777	1779
Q Serve(g_s), s	4.5	6.7	7.0	1.6	1.8	0.0	3.5	6.0	1.2	10.3	7.9	8.0
Cycle Q Clear(g_c), s	4.5	6.7	7.0	1.6	1.8	0.0	3.5	6.0	1.2	10.3	7.9	8.0
Prop In Lane	1.00		0.63	1.00		1.00	1.00		1.00	1.00		0.24
Lane Grp Cap(c), veh/h	165	417	385	77	658		129	753	324	358	605	606
V/C Ratio(X)	0.76	0.50	0.53	0.59	0.18		0.76	0.50	0.11	0.82	0.46	0.46
Avail Cap(c_a), veh/h	559	1200	1109	285	1854		477	1925	828	1108	1591	1594
HCM Platoon Ratio	1.00	1.00	1.00	1.00	1.00	1.00	1.00	1.00	1.00	1.00	1.00	1.00
Upstream Filter(I)	1.00	1.00	1.00	1.00	1.00	0.00	1.00	1.00	1.00	1.00	1.00	1.00
Uniform Delay (d), s/veh	28.8	21.6	21.7	30.5	22.3	0.0	29.6	22.6	20.7	24.9	16.7	16.8
Incr Delay (d2), s/veh	7.1	0.9	1.1	7.1	0.1	0.0	8.9	0.5	0.2	4.7	0.5	0.5
Initial Q Delay(d3),s/veh	0.0	0.0	0.0	0.0	0.0	0.0	0.0	0.0	0.0	0.0	0.0	0.0
%ile BackOfQ(50%),veh/ln	2.1	2.6	2.5	0.8	0.7	0.0	1.7	2.3	0.4	4.4	2.9	2.9
Unsig. Movement Delay, s/veh												
LnGrp Delay(d),s/veh	35.8	22.5	22.8	37.6	22.4	0.0	38.5	23.1	20.8	29.6	17.3	17.3
LnGrp LOS	D	C	C	D	C		D	C	C	C	B	B
Approach Vol, veh/h		539			164	A		508			848	
Approach Delay, s/veh		25.8			26.7			25.9			21.6	
Approach LOS		C			C			C			C	

Timer - Assigned Phs	1	2	3	4	5	6	7	8
Phs Duration (G+Y+Rc), s	17.6	19.6	7.4	20.3	9.3	27.9	10.6	17.1
Change Period (Y+Rc), s	4.6	5.8	4.6	5.1	4.6	5.8	4.6	5.1
Max Green Setting (Gmax), s	40.4	35.2	10.4	43.9	17.4	58.2	20.4	33.9
Max Q Clear Time (g_c+I1), s	12.3	8.0	3.6	9.0	5.5	10.0	6.5	3.8
Green Ext Time (p_c), s	0.8	2.5	0.0	2.5	0.2	3.4	0.2	0.6

Intersection Summary	
HCM 6th Ctrl Delay	24.1
HCM 6th LOS	C

Notes

Unsignalized Delay for [WBR] is excluded from calculations of the approach delay and intersection delay.

Intersection	
Intersection Delay, s/veh	9.7
Intersection LOS	A

Movement	EBL	EBT	EBR	WBL	WBT	WBR	NBL	NBT	NBR	SBL	SBT	SBR
Lane Configurations												
Traffic Vol, veh/h	36	68	8	7	70	42	9	37	30	31	31	34
Future Vol, veh/h	36	68	8	7	70	42	9	37	30	31	31	34
Peak Hour Factor	0.74	0.74	0.74	0.79	0.79	0.79	0.45	0.45	0.45	0.87	0.87	0.87
Heavy Vehicles, %	2	2	2	2	2	2	2	2	2	2	2	2
Mvmt Flow	49	92	11	9	89	53	20	82	67	36	36	39
Number of Lanes	0	1	1	0	1	0	0	1	0	0	1	1

Approach	EB	WB	NB	SB
Opposing Approach	WB	EB	SB	NB
Opposing Lanes	1	2	2	1
Conflicting Approach Left	SB	NB	EB	WB
Conflicting Lanes Left	2	1	2	1
Conflicting Approach Right	NB	SB	WB	EB
Conflicting Lanes Right	1	2	1	2
HCM Control Delay	9.8	9.9	10.1	8.8
HCM LOS	A	A	B	A

Lane	NBLn1	EBLn1	EBLn2	WBLn1	SBLn1	SBLn2
Vol Left, %	12%	35%	0%	6%	50%	0%
Vol Thru, %	49%	65%	0%	59%	50%	0%
Vol Right, %	39%	0%	100%	35%	0%	100%
Sign Control	Stop	Stop	Stop	Stop	Stop	Stop
Traffic Vol by Lane	76	104	8	119	62	34
LT Vol	9	36	0	7	31	0
Through Vol	37	68	0	70	31	0
RT Vol	30	0	8	42	0	34
Lane Flow Rate	169	141	11	151	71	39
Geometry Grp	6	7	7	6	7	7
Degree of Util (X)	0.248	0.219	0.014	0.221	0.114	0.052
Departure Headway (Hd)	5.276	5.601	4.721	5.279	5.78	4.821
Convergence, Y/N	Yes	Yes	Yes	Yes	Yes	Yes
Cap	677	637	752	675	616	736
Service Time	3.342	3.368	2.487	3.347	3.552	2.593
HCM Lane V/C Ratio	0.25	0.221	0.015	0.224	0.115	0.053
HCM Control Delay	10.1	10	7.6	9.9	9.3	7.9
HCM Lane LOS	B	A	A	A	A	A
HCM 95th-tile Q	1	0.8	0	0.8	0.4	0.2

Intersection	
Intersection Delay, s/veh	10.5
Intersection LOS	B

Movement	EBL	EBT	EBR	WBL	WBT	WBR	NBL	NBT	NBR	SBL	SBT	SBR
Lane Configurations												
Traffic Vol, veh/h	4	60	22	2	67	126	20	70	1	77	115	8
Future Vol, veh/h	4	60	22	2	67	126	20	70	1	77	115	8
Peak Hour Factor	0.68	0.68	0.68	0.66	0.66	0.66	0.70	0.70	0.70	0.84	0.84	0.84
Heavy Vehicles, %	2	2	2	2	2	2	2	2	2	2	2	2
Mvmt Flow	6	88	32	3	102	191	29	100	1	92	137	10
Number of Lanes	0	1	0	0	1	0	0	1	0	0	1	0

Approach	EB	WB	NB	SB
Opposing Approach	WB	EB	SB	NB
Opposing Lanes	1	1	1	1
Conflicting Approach Left	SB	NB	EB	WB
Conflicting Lanes Left	1	1	1	1
Conflicting Approach Right	NB	SB	WB	EB
Conflicting Lanes Right	1	1	1	1
HCM Control Delay	9.4	10.8	9.8	11.1
HCM LOS	A	B	A	B

Lane	NBLn1	EBLn1	WBLn1	SBLn1
Vol Left, %	22%	5%	1%	39%
Vol Thru, %	77%	70%	34%	57%
Vol Right, %	1%	26%	65%	4%
Sign Control	Stop	Stop	Stop	Stop
Traffic Vol by Lane	91	86	195	200
LT Vol	20	4	2	77
Through Vol	70	60	67	115
RT Vol	1	22	126	8
Lane Flow Rate	130	126	295	238
Geometry Grp	1	1	1	1
Degree of Util (X)	0.196	0.183	0.392	0.348
Departure Headway (Hd)	5.416	5.217	4.771	5.261
Convergence, Y/N	Yes	Yes	Yes	Yes
Cap	663	687	759	683
Service Time	3.451	3.253	2.771	3.291
HCM Lane V/C Ratio	0.196	0.183	0.389	0.348
HCM Control Delay	9.8	9.4	10.8	11.1
HCM Lane LOS	A	A	B	B
HCM 95th-tile Q	0.7	0.7	1.9	1.6

Intersection	
Intersection Delay, s/veh	13.6
Intersection LOS	B

Movement	EBL	EBT	EBR	WBL	WBT	WBR	NBL	NBT	NBR	SBL	SBT	SBR
Lane Configurations												
Traffic Vol, veh/h	80	157	12	9	107	46	34	111	34	92	166	52
Future Vol, veh/h	80	157	12	9	107	46	34	111	34	92	166	52
Peak Hour Factor	0.86	0.86	0.86	0.86	0.86	0.86	0.65	0.65	0.65	0.85	0.85	0.85
Heavy Vehicles, %	2	2	2	2	2	2	2	2	2	2	2	2
Mvmt Flow	93	183	14	10	124	53	52	171	52	108	195	61
Number of Lanes	1	1	0	0	1	0	1	1	0	1	1	0

Approach	EB	WB	NB	SB
Opposing Approach	WB	EB	SB	NB
Opposing Lanes	1	2	2	2
Conflicting Approach Left	SB	NB	EB	WB
Conflicting Lanes Left	2	2	2	1
Conflicting Approach Right	NB	SB	WB	EB
Conflicting Lanes Right	2	2	1	2
HCM Control Delay	13.1	14	13.5	14
HCM LOS	B	B	B	B

Lane	NBLn1	NBLn2	EBLn1	EBLn2	WBLn1	SBLn1	SBLn2
Vol Left, %	100%	0%	100%	0%	6%	100%	0%
Vol Thru, %	0%	77%	0%	93%	66%	0%	76%
Vol Right, %	0%	23%	0%	7%	28%	0%	24%
Sign Control	Stop	Stop	Stop	Stop	Stop	Stop	Stop
Traffic Vol by Lane	34	145	80	169	162	92	218
LT Vol	34	0	80	0	9	92	0
Through Vol	0	111	0	157	107	0	166
RT Vol	0	34	0	12	46	0	52
Lane Flow Rate	52	223	93	197	188	108	256
Geometry Grp	7	7	7	7	6	7	7
Degree of Util (X)	0.107	0.414	0.192	0.375	0.365	0.218	0.467
Departure Headway (Hd)	7.357	6.678	7.431	6.871	6.982	7.238	6.556
Convergence, Y/N	Yes	Yes	Yes	Yes	Yes	Yes	Yes
Cap	488	540	484	525	516	499	554
Service Time	5.095	4.416	5.17	4.609	5.026	4.938	4.256
HCM Lane V/C Ratio	0.107	0.413	0.192	0.375	0.364	0.216	0.462
HCM Control Delay	11	14.1	11.9	13.7	14	11.9	14.9
HCM Lane LOS	B	B	B	B	B	B	B
HCM 95th-tile Q	0.4	2	0.7	1.7	1.7	0.8	2.5



Movement	EBL	EBT	EBR	WBL	WBT	WBR	NBL	NBT	NBR	SBL	SBT	SBR
Lane Configurations												
Traffic Volume (veh/h)	35	208	39	1	105	66	20	109	3	93	286	39
Future Volume (veh/h)	35	208	39	1	105	66	20	109	3	93	286	39
Initial Q (Qb), veh	0	0	0	0	0	0	0	0	0	0	0	0
Ped-Bike Adj(A_pbT)	0.99		0.95	0.99		0.95	1.00		0.95	1.00		0.96
Parking Bus, Adj	1.00	1.00	1.00	1.00	1.00	1.00	1.00	1.00	1.00	1.00	1.00	1.00
Work Zone On Approach		No			No			No			No	
Adj Sat Flow, veh/h/ln	1870	1870	1870	1870	1870	1870	1870	1870	1870	1870	1870	1870
Adj Flow Rate, veh/h	47	281	53	1	111	69	24	128	4	107	329	45
Peak Hour Factor	0.74	0.74	0.74	0.95	0.95	0.95	0.85	0.85	0.85	0.87	0.87	0.87
Percent Heavy Veh, %	2	2	2	2	2	2	2	2	2	2	2	2
Cap, veh/h	103	400	71	58	311	192	68	530	17	167	560	77
Arrive On Green	0.29	0.29	0.29	0.29	0.29	0.29	0.04	0.29	0.29	0.09	0.35	0.35
Sat Flow, veh/h	134	1360	241	2	1058	653	1781	1801	56	1781	1600	219
Grp Volume(v), veh/h	381	0	0	181	0	0	24	0	132	107	0	374
Grp Sat Flow(s),veh/h/ln	1736	0	0	1712	0	0	1781	0	1857	1781	0	1819
Q Serve(g_s), s	5.7	0.0	0.0	0.0	0.0	0.0	0.8	0.0	3.4	3.7	0.0	10.6
Cycle Q Clear(g_c), s	12.4	0.0	0.0	5.3	0.0	0.0	0.8	0.0	3.4	3.7	0.0	10.6
Prop In Lane	0.12		0.14	0.01		0.38	1.00		0.03	1.00		0.12
Lane Grp Cap(c), veh/h	574	0	0	560	0	0	68	0	547	167	0	637
V/C Ratio(X)	0.66	0.00	0.00	0.32	0.00	0.00	0.35	0.00	0.24	0.64	0.00	0.59
Avail Cap(c_a), veh/h	1697	0	0	1691	0	0	262	0	1424	600	0	1729
HCM Platoon Ratio	1.00	1.00	1.00	1.00	1.00	1.00	1.00	1.00	1.00	1.00	1.00	1.00
Upstream Filter(I)	1.00	0.00	0.00	1.00	0.00	0.00	1.00	0.00	1.00	1.00	0.00	1.00
Uniform Delay (d), s/veh	20.0	0.0	0.0	17.6	0.0	0.0	29.7	0.0	16.9	27.6	0.0	16.8
Incr Delay (d2), s/veh	1.3	0.0	0.0	0.3	0.0	0.0	1.2	0.0	1.0	1.5	0.0	3.9
Initial Q Delay(d3),s/veh	0.0	0.0	0.0	0.0	0.0	0.0	0.0	0.0	0.0	0.0	0.0	0.0
%ile BackOfQ(50%),veh/ln	4.8	0.0	0.0	2.0	0.0	0.0	0.4	0.0	1.4	1.5	0.0	4.5
Unsig. Movement Delay, s/veh												
LnGrp Delay(d),s/veh	21.4	0.0	0.0	18.0	0.0	0.0	30.8	0.0	18.0	29.1	0.0	20.7
LnGrp LOS	C	A	A	B	A	A	C	A	B	C	A	C
Approach Vol, veh/h		381			181			156			481	
Approach Delay, s/veh		21.4			18.0			20.0			22.6	
Approach LOS		C			B			B			C	

Timer - Assigned Phs	1	2		4	5	6		8
Phs Duration (G+Y+Rc), s	7.1	30.0		26.1	10.6	26.5		26.1
Change Period (Y+Rc), s	* 4.7	7.9		7.5	* 4.7	* 7.9		7.5
Max Green Setting (Gmax), s	* 9.3	60.1		60.5	* 21	* 49		60.5
Max Q Clear Time (g_c+I1), s	2.8	12.6		7.3	5.7	5.4		14.4
Green Ext Time (p_c), s	0.0	8.4		1.2	0.1	2.4		2.8

Intersection Summary		
HCM 6th Ctrl Delay	21.2	
HCM 6th LOS	C	

Notes

* HCM 6th computational engine requires equal clearance times for the phases crossing the barrier.

Intersection	
Int Delay, s/veh	2.5

Movement	EBL	EBT	EBR	WBL	WBT	WBR	NBL	NBT	NBR	SBL	SBT	SBR
Lane Configurations		⇕			⇕			⇕			⇕	
Traffic Vol, veh/h	14	291	0	0	168	35	0	0	0	57	0	10
Future Vol, veh/h	14	291	0	0	168	35	0	0	0	57	0	10
Conflicting Peds, #/hr	10	0	10	10	0	10	10	0	10	10	0	10
Sign Control	Free	Free	Free	Free	Free	Free	Stop	Stop	Stop	Stop	Stop	Stop
RT Channelized	-	-	None	-	-	None	-	-	None	-	-	None
Storage Length	-	-	-	-	-	-	-	-	-	-	-	-
Veh in Median Storage, #	-	0	-	-	0	-	-	0	-	-	0	-
Grade, %	-	0	-	-	0	-	-	0	-	-	0	-
Peak Hour Factor	82	82	82	95	95	95	92	92	92	68	68	68
Heavy Vehicles, %	2	2	2	2	2	2	2	2	2	2	2	2
Mvmt Flow	17	355	0	0	177	37	0	0	0	84	0	15

Major/Minor	Major1			Major2			Minor1			Minor2		
Conflicting Flow All	224	0	0	365	0	0	612	623	375	605	605	216
Stage 1	-	-	-	-	-	-	399	399	-	206	206	-
Stage 2	-	-	-	-	-	-	213	224	-	399	399	-
Critical Hdwy	4.12	-	-	4.12	-	-	7.12	6.52	6.22	7.12	6.52	6.22
Critical Hdwy Stg 1	-	-	-	-	-	-	6.12	5.52	-	6.12	5.52	-
Critical Hdwy Stg 2	-	-	-	-	-	-	6.12	5.52	-	6.12	5.52	-
Follow-up Hdwy	2.218	-	-	2.218	-	-	3.518	4.018	3.318	3.518	4.018	3.318
Pot Cap-1 Maneuver	1345	-	-	1194	-	-	405	402	671	410	412	824
Stage 1	-	-	-	-	-	-	627	602	-	796	731	-
Stage 2	-	-	-	-	-	-	789	718	-	627	602	-
Platoon blocked, %		-	-		-	-						
Mov Cap-1 Maneuver	1332	-	-	1183	-	-	385	388	658	397	397	808
Mov Cap-2 Maneuver	-	-	-	-	-	-	385	388	-	397	397	-
Stage 1	-	-	-	-	-	-	611	586	-	776	724	-
Stage 2	-	-	-	-	-	-	767	711	-	611	586	-

Approach	EB	WB	NB	SB
HCM Control Delay, s	0.4	0	0	15.8
HCM LOS			A	C

Minor Lane/Major Mvmt	NBLn1	EBL	EBT	EBR	WBL	WBT	WBR	SBLn1
Capacity (veh/h)	-	1332	-	-	1183	-	-	430
HCM Lane V/C Ratio	-	0.013	-	-	-	-	-	0.229
HCM Control Delay (s)	0	7.7	0	-	0	-	-	15.8
HCM Lane LOS	A	A	A	-	A	-	-	C
HCM 95th %tile Q(veh)	-	0	-	-	0	-	-	0.9

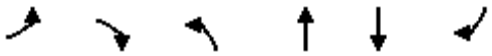

Movement	EBL	EBR	NBL	NBT	SBT	SBR
Lane Configurations						
Traffic Volume (veh/h)	80	272	143	366	482	50
Future Volume (veh/h)	80	272	143	366	482	50
Initial Q (Qb), veh	0	0	0	0	0	0
Ped-Bike Adj(A_pbT)	1.00	1.00	1.00			0.96
Parking Bus, Adj	1.00	1.00	1.00	1.00	1.00	1.00
Work Zone On Approach	No			No	No	
Adj Sat Flow, veh/h/ln	1870	1870	1870	1870	1870	1870
Adj Flow Rate, veh/h	103	349	154	394	518	54
Peak Hour Factor	0.78	0.78	0.93	0.93	0.93	0.93
Percent Heavy Veh, %	2	2	2	2	2	2
Cap, veh/h	420	556	205	1068	639	67
Arrive On Green	0.24	0.24	0.11	0.57	0.39	0.39
Sat Flow, veh/h	1781	1585	1781	1870	1657	173
Grp Volume(v), veh/h	103	349	154	394	0	572
Grp Sat Flow(s),veh/h/ln	1781	1585	1781	1870	0	1830
Q Serve(g_s), s	2.7	10.4	4.8	6.5	0.0	15.9
Cycle Q Clear(g_c), s	2.7	10.4	4.8	6.5	0.0	15.9
Prop In Lane	1.00	1.00	1.00			0.09
Lane Grp Cap(c), veh/h	420	556	205	1068	0	706
V/C Ratio(X)	0.25	0.63	0.75	0.37	0.00	0.81
Avail Cap(c_a), veh/h	626	739	1064	3911	0	2605
HCM Platoon Ratio	1.00	1.00	1.00	1.00	1.00	1.00
Upstream Filter(I)	1.00	1.00	1.00	1.00	0.00	1.00
Uniform Delay (d), s/veh	17.6	15.4	24.4	6.6	0.0	15.6
Incr Delay (d2), s/veh	0.3	1.2	5.5	0.2	0.0	2.3
Initial Q Delay(d3),s/veh	0.0	0.0	0.0	0.0	0.0	0.0
%ile BackOfQ(50%),veh/ln	1.0	0.2	2.1	1.8	0.0	5.7
Unsig. Movement Delay, s/veh						
LnGrp Delay(d),s/veh	17.9	16.6	29.9	6.9	0.0	17.9
LnGrp LOS	B	B	C	A	A	B
Approach Vol, veh/h	452			548	572	
Approach Delay, s/veh	16.9			13.3	17.9	
Approach LOS	B			B	B	

Timer - Assigned Phs		2		4	5	6
Phs Duration (G+Y+Rc), s		38.5		18.4	10.5	28.0
Change Period (Y+Rc), s		6.0		5.0	4.0	6.0
Max Green Setting (Gmax), s		119.0		20.0	34.0	81.0
Max Q Clear Time (g_c+I1), s		8.5		12.4	6.8	17.9
Green Ext Time (p_c), s		2.5		1.0	0.4	4.1

Intersection Summary		
HCM 6th Ctrl Delay		16.0
HCM 6th LOS		B



Movement	WBL	WBR	NBT	NBR	SBL	SBT
Lane Configurations						
Traffic Volume (veh/h)	25	48	421	24	39	508
Future Volume (veh/h)	25	48	421	24	39	508
Initial Q (Qb), veh	0	0	0	0	0	0
Ped-Bike Adj(A_pbT)	1.00	1.00		0.96	1.00	
Parking Bus, Adj	1.00	1.00	1.00	1.00	1.00	1.00
Work Zone On Approach	No		No			No
Adj Sat Flow, veh/h/ln	1870	1870	1870	1870	1870	1870
Adj Flow Rate, veh/h	30	58	463	26	41	535
Peak Hour Factor	0.83	0.83	0.91	0.91	0.95	0.95
Percent Heavy Veh, %	2	2	2	2	2	2
Cap, veh/h	152	211	679	38	85	1054
Arrive On Green	0.09	0.09	0.39	0.39	0.05	0.56
Sat Flow, veh/h	1781	1585	1749	98	1781	1870
Grp Volume(v), veh/h	30	58	0	489	41	535
Grp Sat Flow(s),veh/h/ln	1781	1585	0	1848	1781	1870
Q Serve(g_s), s	0.5	1.0	0.0	6.9	0.7	5.5
Cycle Q Clear(g_c), s	0.5	1.0	0.0	6.9	0.7	5.5
Prop In Lane	1.00	1.00		0.05	1.00	
Lane Grp Cap(c), veh/h	152	211	0	717	85	1054
V/C Ratio(X)	0.20	0.27	0.00	0.68	0.48	0.51
Avail Cap(c_a), veh/h	852	834	0	6012	1023	7398
HCM Platoon Ratio	1.00	1.00	1.00	1.00	1.00	1.00
Upstream Filter(I)	1.00	1.00	0.00	1.00	1.00	1.00
Uniform Delay (d), s/veh	13.3	12.2	0.0	8.0	14.5	4.2
Incr Delay (d2), s/veh	0.6	0.7	0.0	1.2	4.1	0.4
Initial Q Delay(d3),s/veh	0.0	0.0	0.0	0.0	0.0	0.0
%ile BackOfQ(50%),veh/ln	0.2	0.3	0.0	1.5	0.3	0.4
Unsig. Movement Delay, s/veh						
LnGrp Delay(d),s/veh	14.0	12.9	0.0	9.1	18.7	4.6
LnGrp LOS	B	B	A	A	B	A
Approach Vol, veh/h	88		489			576
Approach Delay, s/veh	13.3		9.1			5.6
Approach LOS	B		A			A

Timer - Assigned Phs	1	2			6	8
Phs Duration (G+Y+Rc), s	5.5	18.2			23.7	7.7
Change Period (Y+Rc), s	4.0	6.0			6.0	5.0
Max Green Setting (Gmax), s	18.0	102.0			124.0	15.0
Max Q Clear Time (g_c+I1), s	2.7	8.9			7.5	3.0
Green Ext Time (p_c), s	0.0	3.3			3.6	0.1

Intersection Summary	
HCM 6th Ctrl Delay	7.7
HCM 6th LOS	A



Movement	EBL	EBT	EBR	WBL	WBT	WBR	NBL	NBT	NBR	SBL	SBT	SBR
Lane Configurations												
Traffic Volume (veh/h)	3	69	1	33	67	149	2	6	9	232	25	2
Future Volume (veh/h)	3	69	1	33	67	149	2	6	9	232	25	2
Initial Q (Qb), veh	0	0	0	0	0	0	0	0	0	0	0	0
Ped-Bike Adj(A_pbT)	1.00		0.87	1.00		0.92	0.99		0.98	1.00		0.97
Parking Bus, Adj	1.00	1.00	1.00	1.00	1.00	1.00	1.00	1.00	1.00	1.00	1.00	1.00
Work Zone On Approach		No			No			No			No	
Adj Sat Flow, veh/h/ln	1870	1870	1870	1870	1870	1870	1870	1870	1870	1870	1870	1870
Adj Flow Rate, veh/h	3	78	1	35	72	160	4	11	17	258	28	2
Peak Hour Factor	0.88	0.88	0.88	0.93	0.93	0.93	0.53	0.53	0.53	0.90	0.90	0.90
Percent Heavy Veh, %	2	2	2	2	2	2	2	2	2	2	2	2
Cap, veh/h	5	138	2	84	173	204	137	374	537	919	1064	76
Arrive On Green	0.08	0.08	0.08	0.14	0.14	0.14	0.62	0.62	0.62	0.62	0.62	0.62
Sat Flow, veh/h	68	1768	23	602	1238	1457	161	605	868	1376	1720	123
Grp Volume(v), veh/h	82	0	0	107	0	160	32	0	0	258	0	30
Grp Sat Flow(s),veh/h/ln	1859	0	0	1840	0	1457	1634	0	0	1376	0	1843
Q Serve(g_s), s	4.7	0.0	0.0	5.8	0.0	11.7	0.0	0.0	0.0	8.6	0.0	0.7
Cycle Q Clear(g_c), s	4.7	0.0	0.0	5.8	0.0	11.7	0.8	0.0	0.0	9.4	0.0	0.7
Prop In Lane	0.04		0.01	0.33		1.00	0.12		0.53	1.00		0.07
Lane Grp Cap(c), veh/h	145	0	0	257	0	204	1047	0	0	919	0	1140
V/C Ratio(X)	0.56	0.00	0.00	0.42	0.00	0.78	0.03	0.00	0.00	0.28	0.00	0.03
Avail Cap(c_a), veh/h	490	0	0	586	0	464	1047	0	0	919	0	1140
HCM Platoon Ratio	1.00	1.00	1.00	1.00	1.00	1.00	1.00	1.00	1.00	1.00	1.00	1.00
Upstream Filter(I)	1.00	0.00	0.00	1.00	0.00	1.00	1.00	0.00	0.00	1.00	0.00	1.00
Uniform Delay (d), s/veh	48.9	0.0	0.0	43.2	0.0	45.7	8.2	0.0	0.0	9.8	0.0	8.1
Incr Delay (d2), s/veh	1.3	0.0	0.0	0.4	0.0	2.5	0.1	0.0	0.0	0.8	0.0	0.0
Initial Q Delay(d3),s/veh	0.0	0.0	0.0	0.0	0.0	0.0	0.0	0.0	0.0	0.0	0.0	0.0
%ile BackOfQ(50%),veh/ln	2.2	0.0	0.0	2.6	0.0	4.3	0.3	0.0	0.0	3.0	0.0	0.3
Unsig. Movement Delay, s/veh												
LnGrp Delay(d),s/veh	50.2	0.0	0.0	43.6	0.0	48.2	8.2	0.0	0.0	10.5	0.0	8.2
LnGrp LOS	D	A	A	D	A	D	A	A	A	B	A	A
Approach Vol, veh/h		82			267			32			288	
Approach Delay, s/veh		50.2			46.4			8.2			10.3	
Approach LOS		D			D			A			B	

Timer - Assigned Phs	2	4	6	8
Phs Duration (G+Y+Rc), s	74.0	14.6	74.0	21.4
Change Period (Y+Rc), s	6.0	6.0	6.0	6.0
Max Green Setting (Gmax), s	68.0	29.0	68.0	35.0
Max Q Clear Time (g_c+I1), s	2.8	6.7	11.4	13.7
Green Ext Time (p_c), s	0.0	0.2	2.5	0.6

Intersection Summary	
HCM 6th Ctrl Delay	29.5
HCM 6th LOS	C



Movement	EBL	EBT	EBR	WBL	WBT	WBR	NBL	NBT	NBR	SBL	SBT	SBR
Lane Configurations												
Traffic Volume (veh/h)	21	39	256	5	24	13	175	1019	6	49	1521	49
Future Volume (veh/h)	21	39	256	5	24	13	175	1019	6	49	1521	49
Initial Q (Qb), veh	0	0	0	0	0	0	0	0	0	0	0	0
Ped-Bike Adj(A_pbT)	1.00		0.94	1.00		0.96	1.00		0.96	1.00		0.98
Parking Bus, Adj	1.00	1.00	1.00	1.00	1.00	1.00	1.00	1.00	1.00	1.00	1.00	1.00
Work Zone On Approach		No			No			No			No	
Adj Sat Flow, veh/h/ln	1870	1870	1870	1870	1870	1870	1870	1870	1870	1870	1870	1870
Adj Flow Rate, veh/h	22	41	272	6	30	16	188	1096	6	52	1618	52
Peak Hour Factor	0.94	0.94	0.94	0.79	0.79	0.79	0.93	0.93	0.93	0.94	0.94	0.94
Percent Heavy Veh, %	2	2	2	2	2	2	2	2	2	2	2	2
Cap, veh/h	78	373	757	27	320	260	292	1758	10	123	1670	797
Arrive On Green	0.04	0.20	0.20	0.02	0.17	0.17	0.08	0.49	0.49	0.07	0.47	0.47
Sat Flow, veh/h	1781	1870	2615	1781	1870	1519	3456	3623	20	1781	3554	1549
Grp Volume(v), veh/h	22	41	272	6	30	16	188	538	564	52	1618	52
Grp Sat Flow(s),veh/h/ln	1781	1870	1307	1781	1870	1519	1728	1777	1866	1781	1777	1549
Q Serve(g_s), s	1.4	2.1	9.8	0.4	1.6	1.0	6.2	26.4	26.4	3.3	52.4	2.0
Cycle Q Clear(g_c), s	1.4	2.1	9.8	0.4	1.6	1.0	6.2	26.4	26.4	3.3	52.4	2.0
Prop In Lane	1.00		1.00	1.00		1.00	1.00		0.01	1.00		1.00
Lane Grp Cap(c), veh/h	78	373	757	27	320	260	292	862	905	123	1670	797
V/C Ratio(X)	0.28	0.11	0.36	0.22	0.09	0.06	0.64	0.62	0.62	0.42	0.97	0.07
Avail Cap(c_a), veh/h	167	728	1253	167	728	591	292	862	905	151	1671	797
HCM Platoon Ratio	1.00	1.00	1.00	1.00	1.00	1.00	1.00	1.00	1.00	1.00	1.00	1.00
Upstream Filter(I)	1.00	1.00	1.00	1.00	1.00	1.00	1.00	1.00	1.00	1.00	1.00	1.00
Uniform Delay (d), s/veh	54.8	38.7	33.8	57.5	41.3	41.0	52.4	22.5	22.5	52.8	30.5	14.5
Incr Delay (d2), s/veh	0.7	0.3	0.6	1.5	0.3	0.2	3.8	3.4	3.2	0.9	15.8	0.2
Initial Q Delay(d3),s/veh	0.0	0.0	0.0	0.0	0.0	0.0	0.0	0.0	0.0	0.0	0.0	0.0
%ile BackOfQ(50%),veh/ln	0.6	1.0	3.2	0.2	0.8	0.4	2.7	10.7	11.2	1.5	23.5	0.7
Unsig. Movement Delay, s/veh												
LnGrp Delay(d),s/veh	55.5	39.0	34.4	59.1	41.5	41.3	56.2	25.9	25.7	53.6	46.2	14.6
LnGrp LOS	E	D	C	E	D	D	E	C	C	D	D	B
Approach Vol, veh/h		335			52			1290			1722	
Approach Delay, s/veh		36.4			43.5			30.2			45.5	
Approach LOS		D			D			C			D	

Timer - Assigned Phs	1	2	3	4	5	6	7	8
Phs Duration (G+Y+Rc), s	13.9	65.8	7.5	31.1	15.7	64.0	10.8	27.7
Change Period (Y+Rc), s	* 5.7	* 8.4	* 5.7	7.5	* 5.7	* 8.4	* 5.7	7.5
Max Green Setting (Gmax), s	* 10	* 56	* 11	46.0	* 10	* 56	* 11	46.0
Max Q Clear Time (g_c+I1), s	5.3	28.4	2.4	11.8	8.2	54.4	3.4	3.6
Green Ext Time (p_c), s	0.0	19.1	0.0	3.0	0.1	1.2	0.0	0.4

Intersection Summary	
HCM 6th Ctrl Delay	38.8
HCM 6th LOS	D

Notes

* HCM 6th computational engine requires equal clearance times for the phases crossing the barrier.

Intersection	
Int Delay, s/veh	2

Movement	EBL	EBR	NBL	NBT	SBT	SBR
Lane Configurations						
Traffic Vol, veh/h	47	20	25	509	700	55
Future Vol, veh/h	47	20	25	509	700	55
Conflicting Peds, #/hr	10	10	10	0	0	10
Sign Control	Stop	Stop	Free	Free	Free	Free
RT Channelized	-	None	-	None	-	None
Storage Length	0	-	410	-	-	80
Veh in Median Storage, #	0	-	-	0	0	-
Grade, %	0	-	-	0	0	-
Peak Hour Factor	92	92	92	92	92	92
Heavy Vehicles, %	2	2	2	2	2	2
Mvmt Flow	51	22	27	553	761	60

Major/Minor	Minor2		Major1		Major2	
Conflicting Flow All	1388	781	831	0	-	0
Stage 1	771	-	-	-	-	-
Stage 2	617	-	-	-	-	-
Critical Hdwy	6.42	6.22	4.12	-	-	-
Critical Hdwy Stg 1	5.42	-	-	-	-	-
Critical Hdwy Stg 2	5.42	-	-	-	-	-
Follow-up Hdwy	3.518	3.318	2.218	-	-	-
Pot Cap-1 Maneuver	157	395	801	-	-	-
Stage 1	456	-	-	-	-	-
Stage 2	538	-	-	-	-	-
Platoon blocked, %				-	-	-
Mov Cap-1 Maneuver	149	388	793	-	-	-
Mov Cap-2 Maneuver	149	-	-	-	-	-
Stage 1	436	-	-	-	-	-
Stage 2	533	-	-	-	-	-

Approach	EB	NB	SB
HCM Control Delay, s	37.1	0.5	0
HCM LOS	E		

Minor Lane/Major Mvmt	NBL	NBT	EBLn1	SBT	SBR
Capacity (veh/h)	793	-	183	-	-
HCM Lane V/C Ratio	0.034	-	0.398	-	-
HCM Control Delay (s)	9.7	-	37.1	-	-
HCM Lane LOS	A	-	E	-	-
HCM 95th %tile Q(veh)	0.1	-	1.8	-	-

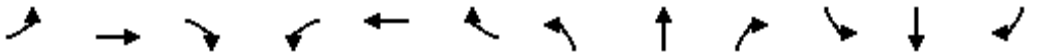

Movement	EBL	EBT	EBR	WBL	WBT	WBR	NBL	NBT	NBR	SBL	SBT	SBR
Lane Configurations												
Traffic Volume (veh/h)	94	33	39	50	40	100	49	262	21	143	311	109
Future Volume (veh/h)	94	33	39	50	40	100	49	262	21	143	311	109
Initial Q (Qb), veh	0	0	0	0	0	0	0	0	0	0	0	0
Ped-Bike Adj(A_pbT)	1.00		0.97	1.00		0.94	1.00		0.97	1.00		0.97
Parking Bus, Adj	1.00	1.00	1.00	1.00	1.00	1.00	1.00	1.00	1.00	1.00	1.00	1.00
Work Zone On Approach		No			No			No			No	
Adj Sat Flow, veh/h/ln	1870	1870	1870	1870	1870	1870	1870	1870	1870	1870	1870	1870
Adj Flow Rate, veh/h	127	45	53	75	60	149	58	308	25	151	327	115
Peak Hour Factor	0.74	0.74	0.74	0.67	0.67	0.67	0.85	0.85	0.85	0.95	0.95	0.95
Percent Heavy Veh, %	2	2	2	2	2	2	2	2	2	2	2	2
Cap, veh/h	260	418	342	217	373	296	208	436	35	244	710	245
Arrive On Green	0.15	0.22	0.22	0.12	0.20	0.20	0.12	0.26	0.26	0.14	0.28	0.28
Sat Flow, veh/h	1781	1870	1530	1781	1870	1486	1781	1702	138	1781	2570	885
Grp Volume(v), veh/h	127	45	53	75	60	149	58	0	333	151	224	218
Grp Sat Flow(s),veh/h/ln	1781	1870	1530	1781	1870	1486	1781	0	1840	1781	1777	1678
Q Serve(g_s), s	4.5	1.3	1.9	2.7	1.8	6.1	2.0	0.0	11.3	5.5	7.2	7.4
Cycle Q Clear(g_c), s	4.5	1.3	1.9	2.7	1.8	6.1	2.0	0.0	11.3	5.5	7.2	7.4
Prop In Lane	1.00		1.00	1.00		1.00	1.00		0.08	1.00		0.53
Lane Grp Cap(c), veh/h	260	418	342	217	373	296	208	0	471	244	491	464
V/C Ratio(X)	0.49	0.11	0.16	0.35	0.16	0.50	0.28	0.00	0.71	0.62	0.46	0.47
Avail Cap(c_a), veh/h	388	952	778	285	843	669	311	0	1016	466	1136	1073
HCM Platoon Ratio	1.00	1.00	1.00	1.00	1.00	1.00	1.00	1.00	1.00	1.00	1.00	1.00
Upstream Filter(I)	1.00	1.00	1.00	1.00	1.00	1.00	1.00	0.00	1.00	1.00	1.00	1.00
Uniform Delay (d), s/veh	27.0	21.3	21.5	27.7	22.8	24.5	27.7	0.0	23.2	28.0	20.6	20.7
Incr Delay (d2), s/veh	0.5	0.2	0.3	0.4	0.3	1.9	0.3	0.0	2.8	0.9	0.9	1.1
Initial Q Delay(d3),s/veh	0.0	0.0	0.0	0.0	0.0	0.0	0.0	0.0	0.0	0.0	0.0	0.0
%ile BackOfQ(50%),veh/ln	1.9	0.6	0.7	1.1	0.8	2.2	0.8	0.0	4.8	2.3	2.9	2.8
Unsig. Movement Delay, s/veh												
LnGrp Delay(d),s/veh	27.6	21.4	21.8	28.0	23.1	26.4	28.0	0.0	26.0	28.9	21.5	21.8
LnGrp LOS	C	C	C	C	C	C	C	A	C	C	C	C
Approach Vol, veh/h		225			284			391			593	
Approach Delay, s/veh		25.0			26.1			26.3			23.5	
Approach LOS		C			C			C			C	

Timer - Assigned Phs	1	2	3	4	5	6	7	8
Phs Duration (G+Y+Rc), s	13.4	23.6	12.4	19.4	12.0	25.0	14.0	17.7
Change Period (Y+Rc), s	4.0	6.0	4.0	4.0	4.0	6.0	4.0	4.0
Max Green Setting (Gmax), s	18.0	38.0	11.0	35.0	12.0	44.0	15.0	31.0
Max Q Clear Time (g_c+I1), s	7.5	13.3	4.7	3.9	4.0	9.4	6.5	8.1
Green Ext Time (p_c), s	0.1	2.7	0.0	0.6	0.0	4.1	0.1	1.2

Intersection Summary	
HCM 6th Ctrl Delay	25.0
HCM 6th LOS	C

Intersection	
Intersection Delay, s/veh	37.6
Intersection LOS	E

Movement	EBL	EBT	EBR	WBL	WBT	WBR	NBL	NBT	NBR	SBL	SBT	SBR
Lane Configurations												
Traffic Vol, veh/h	23	180	220	14	96	188	74	150	16	193	233	15
Future Vol, veh/h	23	180	220	14	96	188	74	150	16	193	233	15
Peak Hour Factor	0.83	0.83	0.83	0.90	0.90	0.90	0.89	0.89	0.89	0.91	0.91	0.91
Heavy Vehicles, %	2	2	2	2	2	2	2	2	2	2	2	2
Mvmt Flow	28	217	265	16	107	209	83	169	18	212	256	16
Number of Lanes	0	1	1	0	1	1	0	1	0	0	1	0

Approach	EB	WB	NB	SB
Opposing Approach	WB	EB	SB	NB
Opposing Lanes	2	2	1	1
Conflicting Approach Left	SB	NB	EB	WB
Conflicting Lanes Left	1	1	2	2
Conflicting Approach Right	NB	SB	WB	EB
Conflicting Lanes Right	1	1	2	2
HCM Control Delay	20.9	16.8	23.9	77
HCM LOS	C	C	C	F

Lane	NBLn1	EBLn1	EBLn2	WBLn1	WBLn2	SBLn1
Vol Left, %	31%	11%	0%	13%	0%	44%
Vol Thru, %	62%	89%	0%	87%	0%	53%
Vol Right, %	7%	0%	100%	0%	100%	3%
Sign Control	Stop	Stop	Stop	Stop	Stop	Stop
Traffic Vol by Lane	240	203	220	110	188	441
LT Vol	74	23	0	14	0	193
Through Vol	150	180	0	96	0	233
RT Vol	16	0	220	0	188	15
Lane Flow Rate	270	245	265	122	209	485
Geometry Grp	2	7	7	7	7	2
Degree of Util (X)	0.614	0.569	0.559	0.297	0.461	1.029
Departure Headway (Hd)	8.412	8.581	7.793	8.953	8.154	7.641
Convergence, Y/N	Yes	Yes	Yes	Yes	Yes	Yes
Cap	431	423	467	403	445	480
Service Time	6.412	6.281	5.493	6.653	5.854	5.641
HCM Lane V/C Ratio	0.626	0.579	0.567	0.303	0.47	1.01
HCM Control Delay	23.9	22	19.9	15.4	17.6	77
HCM Lane LOS	C	C	C	C	C	F
HCM 95th-tile Q	4	3.4	3.4	1.2	2.4	14.4

Intersection	
Int Delay, s/veh	1

Movement	EBL	EBT	EBR	WBL	WBT	WBR	NBL	NBT	NBR	SBL	SBT	SBR
Lane Configurations		↕			↕			↕			↕	
Traffic Vol, veh/h	3	307	14	5	243	1	5	2	1	2	2	2
Future Vol, veh/h	3	307	14	5	243	1	5	2	1	2	2	2
Conflicting Peds, #/hr	10	0	10	10	0	10	10	0	10	10	0	10
Sign Control	Free	Free	Free	Free	Free	Free	Stop	Stop	Stop	Stop	Stop	Stop
RT Channelized	-	-	None	-	-	None	-	-	None	-	-	None
Storage Length	-	-	-	-	-	-	-	-	-	-	-	-
Veh in Median Storage, #	-	0	-	-	0	-	-	0	-	-	0	-
Grade, %	-	0	-	-	0	-	-	0	-	-	0	-
Peak Hour Factor	85	85	85	87	87	87	50	50	50	25	25	25
Heavy Vehicles, %	2	2	2	2	2	2	2	2	2	2	2	2
Mvmt Flow	4	361	16	6	279	1	10	4	2	8	8	8

Major/Minor	Major1			Major2			Minor1			Minor2		
Conflicting Flow All	290	0	0	387	0	0	697	689	389	692	697	300
Stage 1	-	-	-	-	-	-	387	387	-	302	302	-
Stage 2	-	-	-	-	-	-	310	302	-	390	395	-
Critical Hdwy	4.12	-	-	4.12	-	-	7.12	6.52	6.22	7.12	6.52	6.22
Critical Hdwy Stg 1	-	-	-	-	-	-	6.12	5.52	-	6.12	5.52	-
Critical Hdwy Stg 2	-	-	-	-	-	-	6.12	5.52	-	6.12	5.52	-
Follow-up Hdwy	2.218	-	-	2.218	-	-	3.518	4.018	3.318	3.518	4.018	3.318
Pot Cap-1 Maneuver	1272	-	-	1171	-	-	356	369	659	358	365	740
Stage 1	-	-	-	-	-	-	637	610	-	707	664	-
Stage 2	-	-	-	-	-	-	700	664	-	634	605	-
Platoon blocked, %		-	-		-	-						
Mov Cap-1 Maneuver	1260	-	-	1160	-	-	337	358	647	344	354	726
Mov Cap-2 Maneuver	-	-	-	-	-	-	337	358	-	344	354	-
Stage 1	-	-	-	-	-	-	629	601	-	698	653	-
Stage 2	-	-	-	-	-	-	673	653	-	619	597	-

Approach	EB	WB	NB	SB
HCM Control Delay, s	0.1	0.2	15.3	14
HCM LOS			C	B

Minor Lane/Major Mvmt	NBLn1	EBL	EBT	EBR	WBL	WBT	WBR	SBLn1
Capacity (veh/h)	364	1260	-	-	1160	-	-	422
HCM Lane V/C Ratio	0.044	0.003	-	-	0.005	-	-	0.057
HCM Control Delay (s)	15.3	7.9	0	-	8.1	0	-	14
HCM Lane LOS	C	A	A	-	A	A	-	B
HCM 95th %tile Q(veh)	0.1	0	-	-	0	-	-	0.2

APPENDIX G

YEAR 2033 + PROJECT PHASES 1 AND 2 INTERSECTION ANALYSIS WORKSHEETS

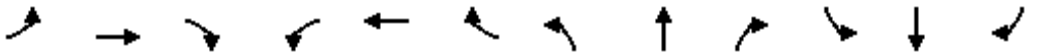

Movement	EBL	EBT	EBR	WBL	WBT	WBR	NBL	NBT	NBR	SBL	SBT	SBR
Lane Configurations												
Traffic Volume (veh/h)	107	227	198	93	236	80	130	787	84	103	556	99
Future Volume (veh/h)	107	227	198	93	236	80	130	787	84	103	556	99
Initial Q (Qb), veh	0	0	0	0	0	0	0	0	0	0	0	0
Ped-Bike Adj(A_pbT)	1.00		0.97	1.00		0.97	1.00		0.96	1.00		0.96
Parking Bus, Adj	1.00	1.00	1.00	1.00	1.00	1.00	1.00	1.00	1.00	1.00	1.00	1.00
Work Zone On Approach		No			No			No			No	
Adj Sat Flow, veh/h/ln	1870	1870	1870	1870	1870	1870	1870	1870	1870	1870	1870	1870
Adj Flow Rate, veh/h	151	320	279	145	369	125	167	1009	108	151	818	146
Peak Hour Factor	0.71	0.71	0.71	0.64	0.64	0.64	0.78	0.78	0.78	0.68	0.68	0.68
Percent Heavy Veh, %	2	2	2	2	2	2	2	2	2	2	2	2
Cap, veh/h	177	433	355	171	427	349	193	1250	134	177	1132	202
Arrive On Green	0.10	0.23	0.23	0.10	0.23	0.23	0.11	0.39	0.39	0.10	0.38	0.38
Sat Flow, veh/h	1781	1870	1531	1781	1870	1531	1781	3223	345	1781	2990	534
Grp Volume(v), veh/h	151	320	279	145	369	125	167	556	561	151	486	478
Grp Sat Flow(s),veh/h/ln	1781	1870	1531	1781	1870	1531	1781	1777	1790	1781	1777	1746
Q Serve(g_s), s	10.2	19.3	20.9	9.8	23.1	8.4	11.3	34.0	34.1	10.2	28.6	28.6
Cycle Q Clear(g_c), s	10.2	19.3	20.9	9.8	23.1	8.4	11.3	34.0	34.1	10.2	28.6	28.6
Prop In Lane	1.00		1.00	1.00		1.00	1.00		0.19	1.00		0.31
Lane Grp Cap(c), veh/h	177	433	355	171	427	349	193	689	694	177	673	661
V/C Ratio(X)	0.85	0.74	0.79	0.85	0.86	0.36	0.86	0.81	0.81	0.85	0.72	0.72
Avail Cap(c_a), veh/h	201	497	407	197	492	403	216	689	694	181	673	661
HCM Platoon Ratio	1.00	1.00	1.00	1.00	1.00	1.00	1.00	1.00	1.00	1.00	1.00	1.00
Upstream Filter(I)	1.00	1.00	1.00	0.49	0.49	0.49	0.54	0.54	0.54	1.00	1.00	1.00
Uniform Delay (d), s/veh	54.1	43.4	44.0	54.3	45.3	39.6	53.5	33.3	33.3	54.1	32.4	32.4
Incr Delay (d2), s/veh	23.4	3.9	7.3	12.5	6.4	0.1	14.9	5.5	5.5	28.8	6.6	6.7
Initial Q Delay(d3),s/veh	0.0	0.0	0.0	0.0	0.0	0.0	0.0	0.0	0.0	0.0	0.0	0.0
%ile BackOfQ(50%),veh/ln	5.7	9.3	8.5	4.9	11.4	3.1	5.8	15.5	15.7	6.0	13.4	13.2
Unsig. Movement Delay, s/veh												
LnGrp Delay(d),s/veh	77.4	47.4	51.4	66.7	51.7	39.7	68.4	38.8	38.8	82.8	39.1	39.2
LnGrp LOS	E	D	D	E	D	D	E	D	D	F	D	D
Approach Vol, veh/h		750			639			1284			1115	
Approach Delay, s/veh		54.9			52.7			42.7			45.0	
Approach LOS		D			D			D			D	

Timer - Assigned Phs	1	2	3	4	5	6	7	8
Phs Duration (G+Y+Rc), s	17.7	53.0	17.3	34.0	18.8	51.9	17.7	33.5
Change Period (Y+Rc), s	5.6	5.7	5.6	5.7	5.6	5.7	5.6	5.7
Max Green Setting (Gmax), s	12.4	41.1	13.5	32.4	14.8	38.7	13.8	32.1
Max Q Clear Time (g_c+I1), s	12.2	36.1	11.8	22.9	13.3	30.6	12.2	25.1
Green Ext Time (p_c), s	0.0	2.4	0.0	1.3	0.0	2.8	0.0	1.0

Intersection Summary	
HCM 6th Ctrl Delay	47.5
HCM 6th LOS	D



Movement	EBL	EBT	EBR	WBL	WBT	WBR	NBL	NBT	NBR	SBL	SBT	SBR
Lane Configurations												
Traffic Volume (veh/h)	77	252	90	20	262	24	145	617	27	71	400	89
Future Volume (veh/h)	77	252	90	20	262	24	145	617	27	71	400	89
Initial Q (Qb), veh	0	0	0	0	0	0	0	0	0	0	0	0
Ped-Bike Adj(A_pbT)	1.00		0.98	1.00		0.97	1.00		0.95	1.00		0.95
Parking Bus, Adj	1.00	1.00	1.00	1.00	1.00	1.00	1.00	1.00	1.00	1.00	1.00	1.00
Work Zone On Approach		No			No			No			No	
Adj Sat Flow, veh/h/ln	1870	1870	1870	1870	1870	1870	1870	1870	1870	1870	1870	1870
Adj Flow Rate, veh/h	113	371	132	29	374	34	193	823	36	106	597	133
Peak Hour Factor	0.68	0.68	0.68	0.70	0.70	0.70	0.75	0.75	0.75	0.67	0.67	0.67
Percent Heavy Veh, %	2	2	2	2	2	2	2	2	2	2	2	2
Cap, veh/h	200	581	207	65	450	39	235	1123	49	136	770	171
Arrive On Green	0.11	0.44	0.44	0.29	0.29	0.29	0.13	0.32	0.32	0.08	0.27	0.27
Sat Flow, veh/h	1781	1308	465	65	1567	138	1781	3460	151	1781	2858	635
Grp Volume(v), veh/h	113	0	503	437	0	0	193	423	436	106	370	360
Grp Sat Flow(s),veh/h/ln	1781	0	1773	1769	0	0	1781	1777	1834	1781	1777	1715
Q Serve(g_s), s	4.9	0.0	18.1	8.9	0.0	0.0	8.7	17.3	17.3	4.8	15.8	15.9
Cycle Q Clear(g_c), s	4.9	0.0	18.1	19.1	0.0	0.0	8.7	17.3	17.3	4.8	15.8	15.9
Prop In Lane	1.00		0.26	0.07		0.08	1.00		0.08	1.00		0.37
Lane Grp Cap(c), veh/h	200	0	788	554	0	0	235	577	596	136	479	462
V/C Ratio(X)	0.56	0.00	0.64	0.79	0.00	0.00	0.82	0.73	0.73	0.78	0.77	0.78
Avail Cap(c_a), veh/h	288	0	1197	866	0	0	396	845	872	275	724	699
HCM Platoon Ratio	1.00	1.00	1.00	1.00	1.00	1.00	1.00	1.00	1.00	1.00	1.00	1.00
Upstream Filter(I)	1.00	0.00	1.00	1.00	0.00	0.00	1.00	1.00	1.00	1.00	1.00	1.00
Uniform Delay (d), s/veh	34.6	0.0	17.7	27.5	0.0	0.0	34.7	24.6	24.6	37.3	27.7	27.8
Incr Delay (d2), s/veh	2.5	0.0	0.9	2.6	0.0	0.0	7.0	1.8	1.8	9.1	2.9	3.2
Initial Q Delay(d3),s/veh	0.0	0.0	0.0	0.0	0.0	0.0	0.0	0.0	0.0	0.0	0.0	0.0
%ile BackOfQ(50%),veh/ln	2.2	0.0	6.9	8.0	0.0	0.0	4.1	7.3	7.5	2.4	6.8	6.7
Unsig. Movement Delay, s/veh												
LnGrp Delay(d),s/veh	37.1	0.0	18.6	30.2	0.0	0.0	41.8	26.4	26.4	46.4	30.7	30.9
LnGrp LOS	D	A	B	C	A	A	D	C	C	D	C	C
Approach Vol, veh/h		616			437			1052			836	
Approach Delay, s/veh		22.0			30.2			29.2			32.8	
Approach LOS		C			C			C			C	

Timer - Assigned Phs	1	2		4	5	6	7	8
Phs Duration (G+Y+Rc), s	10.0	31.2		41.0	14.5	26.6	12.9	28.1
Change Period (Y+Rc), s	3.7	4.5		4.5	3.7	4.5	3.7	4.5
Max Green Setting (Gmax), s	12.3	39.1		55.5	18.3	33.5	13.3	38.5
Max Q Clear Time (g_c+I1), s	6.8	19.3		20.1	10.7	17.9	6.9	21.1
Green Ext Time (p_c), s	0.1	5.5		3.6	0.3	4.2	0.1	2.5

Intersection Summary		
HCM 6th Ctrl Delay	28.9	
HCM 6th LOS	C	



Movement	EBL	EBT	EBR	WBL	WBT	WBR	NBL	NBT	NBR	SBL	SBT	SBR
Lane Configurations												
Traffic Volume (veh/h)	43	188	76	90	134	196	48	630	102	115	491	15
Future Volume (veh/h)	43	188	76	90	134	196	48	630	102	115	491	15
Initial Q (Qb), veh	0	0	0	0	0	0	0	0	0	0	0	0
Ped-Bike Adj(A_pbT)	1.00		0.97	1.00		0.96	1.00		0.95	1.00		0.95
Parking Bus, Adj	1.00	1.00	1.00	1.00	1.00	1.00	1.00	1.00	1.00	1.00	1.00	1.00
Work Zone On Approach		No			No			No			No	
Adj Sat Flow, veh/h/ln	1870	1870	1870	1870	1870	1870	1870	1870	1870	1870	1870	1870
Adj Flow Rate, veh/h	55	241	97	110	163	239	55	716	82	139	592	18
Peak Hour Factor	0.78	0.78	0.78	0.82	0.82	0.82	0.88	0.88	0.88	0.83	0.83	0.83
Percent Heavy Veh, %	2	2	2	2	2	2	2	2	2	2	2	2
Cap, veh/h	62	272	109	148	220	306	73	859	98	165	1127	34
Arrive On Green	0.25	0.25	0.25	0.20	0.20	0.20	0.04	0.27	0.27	0.09	0.32	0.32
Sat Flow, veh/h	247	1081	435	739	1095	1526	1781	3193	365	1781	3515	107
Grp Volume(v), veh/h	393	0	0	273	0	239	55	398	400	139	299	311
Grp Sat Flow(s),veh/h/ln	1763	0	0	1833	0	1526	1781	1777	1781	1781	1777	1845
Q Serve(g_s), s	26.8	0.0	0.0	17.5	0.0	18.6	3.8	26.4	26.4	9.6	17.2	17.2
Cycle Q Clear(g_c), s	26.8	0.0	0.0	17.5	0.0	18.6	3.8	26.4	26.4	9.6	17.2	17.2
Prop In Lane	0.14		0.25	0.40		1.00	1.00		0.21	1.00		0.06
Lane Grp Cap(c), veh/h	443	0	0	368	0	306	73	478	479	165	570	592
V/C Ratio(X)	0.89	0.00	0.00	0.74	0.00	0.78	0.75	0.83	0.83	0.84	0.52	0.53
Avail Cap(c_a), veh/h	522	0	0	543	0	452	127	503	505	247	623	647
HCM Platoon Ratio	1.00	1.00	1.00	1.00	1.00	1.00	1.00	1.00	1.00	1.00	1.00	1.00
Upstream Filter(I)	1.00	0.00	0.00	1.00	0.00	1.00	1.00	1.00	1.00	1.00	1.00	1.00
Uniform Delay (d), s/veh	45.1	0.0	0.0	46.9	0.0	47.3	59.3	43.0	43.1	55.8	34.7	34.7
Incr Delay (d2), s/veh	15.1	0.0	0.0	3.0	0.0	5.2	5.8	14.4	14.5	10.1	2.7	2.6
Initial Q Delay(d3),s/veh	0.0	0.0	0.0	0.0	0.0	0.0	0.0	0.0	0.0	0.0	0.0	0.0
%ile BackOfQ(50%),veh/ln	13.4	0.0	0.0	8.2	0.0	7.4	1.8	13.2	13.3	4.7	7.7	8.0
Unsig. Movement Delay, s/veh												
LnGrp Delay(d),s/veh	60.2	0.0	0.0	49.9	0.0	52.6	65.1	57.4	57.5	65.9	37.4	37.3
LnGrp LOS	E	A	A	D	A	D	E	E	E	E	D	D
Approach Vol, veh/h		393			512			853			749	
Approach Delay, s/veh		60.2			51.2			58.0			42.6	
Approach LOS		E			D			E			D	

Timer - Assigned Phs	1	2		4	5	6		8
Phs Duration (G+Y+Rc), s	10.8	45.5		31.2	17.3	39.0		37.5
Change Period (Y+Rc), s	* 5.7	5.4		6.1	* 5.7	5.4		6.1
Max Green Setting (Gmax), s	* 8.3	43.8		37.0	* 17	35.4		37.0
Max Q Clear Time (g_c+I1), s	15.8	19.2		20.6	11.6	28.4		28.8
Green Ext Time (p_c), s	0.0	8.7		2.2	0.1	4.6		1.5

Intersection Summary	
HCM 6th Ctrl Delay	52.3
HCM 6th LOS	D

Notes

* HCM 6th computational engine requires equal clearance times for the phases crossing the barrier.



Movement	EBL	EBT	EBR	WBL	WBT	WBR	NBL	NBT	NBR	SBL	SBT	SBR
Lane Configurations												
Traffic Volume (veh/h)	62	88	98	43	137	55	130	455	78	27	363	58
Future Volume (veh/h)	62	88	98	43	137	55	130	455	78	27	363	58
Initial Q (Qb), veh	0	0	0	0	0	0	0	0	0	0	0	0
Ped-Bike Adj(A_pbT)	1.00		0.91	1.00		0.94	1.00		0.96	1.00		0.95
Parking Bus, Adj	1.00	1.00	1.00	1.00	1.00	1.00	1.00	1.00	1.00	1.00	1.00	1.00
Work Zone On Approach		No			No			No			No	
Adj Sat Flow, veh/h/ln	1870	1870	1870	1870	1870	1870	1870	1870	1870	1870	1870	1870
Adj Flow Rate, veh/h	71	101	113	52	165	66	153	535	92	35	471	75
Peak Hour Factor	0.87	0.87	0.87	0.83	0.83	0.83	0.85	0.85	0.85	0.77	0.77	0.77
Percent Heavy Veh, %	2	2	2	2	2	2	2	2	2	2	2	2
Cap, veh/h	91	129	173	64	204	81	187	585	101	59	574	464
Arrive On Green	0.12	0.12	0.12	0.20	0.20	0.20	0.10	0.38	0.38	0.03	0.31	0.31
Sat Flow, veh/h	756	1076	1442	321	1020	408	1781	1543	265	1781	1870	1509
Grp Volume(v), veh/h	172	0	113	283	0	0	153	0	627	35	471	75
Grp Sat Flow(s),veh/h/ln	1833	0	1442	1749	0	0	1781	0	1809	1781	1870	1509
Q Serve(g_s), s	7.9	0.0	6.5	13.3	0.0	0.0	7.3	0.0	28.5	1.7	20.1	3.1
Cycle Q Clear(g_c), s	7.9	0.0	6.5	13.3	0.0	0.0	7.3	0.0	28.5	1.7	20.1	3.1
Prop In Lane	0.41		1.00	0.18		0.23	1.00		0.15	1.00		1.00
Lane Grp Cap(c), veh/h	220	0	173	349	0	0	187	0	686	59	574	464
V/C Ratio(X)	0.78	0.00	0.65	0.81	0.00	0.00	0.82	0.00	0.91	0.60	0.82	0.16
Avail Cap(c_a), veh/h	363	0	285	528	0	0	297	0	1009	111	849	685
HCM Platoon Ratio	1.00	1.00	1.00	1.00	1.00	1.00	1.00	1.00	1.00	1.00	1.00	1.00
Upstream Filter(I)	1.00	0.00	1.00	1.00	0.00	0.00	1.00	0.00	1.00	1.00	1.00	1.00
Uniform Delay (d), s/veh	36.9	0.0	36.3	33.0	0.0	0.0	37.9	0.0	25.5	41.2	27.7	21.8
Incr Delay (d2), s/veh	2.3	0.0	1.6	3.1	0.0	0.0	4.5	0.0	7.2	3.6	2.5	0.1
Initial Q Delay(d3),s/veh	0.0	0.0	0.0	0.0	0.0	0.0	0.0	0.0	0.0	0.0	0.0	0.0
%ile BackOfQ(50%),veh/ln	3.6	0.0	2.3	5.7	0.0	0.0	3.2	0.0	12.3	0.8	8.6	1.0
Unsig. Movement Delay, s/veh												
LnGrp Delay(d),s/veh	39.3	0.0	37.9	36.1	0.0	0.0	42.3	0.0	32.7	44.8	30.2	21.9
LnGrp LOS	D	A	D	D	A	A	D	A	C	D	C	C
Approach Vol, veh/h		285			283			780			581	
Approach Delay, s/veh		38.7			36.1			34.6			30.0	
Approach LOS		D			D			C			C	

Timer - Assigned Phs	1	2		4	5	6		8				
Phs Duration (G+Y+Rc), s	8.4	38.5		16.2	14.7	32.3		23.1				
Change Period (Y+Rc), s	5.6	5.8		5.9	5.6	5.8		5.9				
Max Green Setting (Gmax), s	5.4	48.2		17.1	14.4	39.2		26.1				
Max Q Clear Time (g_c+I1), s	3.7	30.5		9.9	9.3	22.1		15.3				
Green Ext Time (p_c), s	0.0	2.3		0.5	0.0	1.6		0.8				

Intersection Summary		
HCM 6th Ctrl Delay		34.0
HCM 6th LOS		C

Intersection	
Intersection Delay, s/veh	108
Intersection LOS	F

Movement	EBL	EBT	EBR	WBL	WBT	WBR	NBL	NBT	NBR	SBL	SBT	SBR
Lane Configurations												
Traffic Vol, veh/h	55	158	84	45	118	101	110	598	67	90	371	31
Future Vol, veh/h	55	158	84	45	118	101	110	598	67	90	371	31
Peak Hour Factor	0.73	0.73	0.73	0.74	0.74	0.74	0.78	0.78	0.78	0.66	0.66	0.66
Heavy Vehicles, %	2	2	2	2	2	2	2	2	2	2	2	2
Mvmt Flow	75	216	115	61	159	136	141	767	86	136	562	47
Number of Lanes	0	1	0	0	1	0	1	2	0	1	2	0

Approach	EB	WB	NB	SB
Opposing Approach	WB	EB	SB	NB
Opposing Lanes	1	1	3	3
Conflicting Approach Left	SB	NB	EB	WB
Conflicting Lanes Left	3	3	1	1
Conflicting Approach Right	NB	SB	WB	EB
Conflicting Lanes Right	3	3	1	1
HCM Control Delay	141.1	92.8	137.8	57.6
HCM LOS	F	F	F	F

Lane	NBLn1	NBLn2	NBLn3	EBLn1	WBLn1	SBLn1	SBLn2	SBLn3
Vol Left, %	100%	0%	0%	19%	17%	100%	0%	0%
Vol Thru, %	0%	100%	75%	53%	45%	0%	100%	80%
Vol Right, %	0%	0%	25%	28%	38%	0%	0%	20%
Sign Control	Stop	Stop	Stop	Stop	Stop	Stop	Stop	Stop
Traffic Vol by Lane	110	399	266	297	264	90	247	155
LT Vol	110	0	0	55	45	90	0	0
Through Vol	0	399	199	158	118	0	247	124
RT Vol	0	0	67	84	101	0	0	31
Lane Flow Rate	141	511	341	407	357	136	375	234
Geometry Grp	7	7	7	7	7	7	7	7
Degree of Util (X)	0.403	1.391	0.912	1.18	1.027	0.391	1.023	0.631
Departure Headway (Hd)	11.104	10.565	10.376	11.111	11.35	11.154	10.615	10.464
Convergence, Y/N	Yes	Yes	Yes	Yes	Yes	Yes	Yes	Yes
Cap	326	348	352	330	321	325	345	347
Service Time	8.804	8.265	8.076	8.811	9.05	8.854	8.315	8.164
HCM Lane V/C Ratio	0.433	1.468	0.969	1.233	1.112	0.418	1.087	0.674
HCM Control Delay	21.1	221	61.5	141.1	92.8	20.8	88.6	29.5
HCM Lane LOS	C	F	F	F	F	C	F	D
HCM 95th-tile Q	1.9	24	9.2	16.2	11.6	1.8	11.9	4.1



Movement	EBL	EBT	EBR	WBL	WBT	WBR	NBL	NBT	NBR	SBL	SBT	SBR
Lane Configurations												
Traffic Volume (veh/h)	106	81	158	61	84	20	81	653	29	12	556	34
Future Volume (veh/h)	106	81	158	61	84	20	81	653	29	12	556	34
Initial Q (Qb), veh	0	0	0	0	0	0	0	0	0	0	0	0
Ped-Bike Adj(A_pbT)	1.00		0.96	1.00		0.96	1.00		0.96	1.00		0.95
Parking Bus, Adj	1.00	1.00	1.00	1.00	1.00	1.00	1.00	1.00	1.00	1.00	1.00	1.00
Work Zone On Approach		No			No			No			No	
Adj Sat Flow, veh/h/ln	1870	1870	1870	1870	1870	1870	1870	1870	1870	1870	1870	1870
Adj Flow Rate, veh/h	129	99	193	95	131	31	96	777	35	14	670	41
Peak Hour Factor	0.82	0.82	0.82	0.64	0.64	0.64	0.84	0.84	0.84	0.83	0.83	0.83
Percent Heavy Veh, %	2	2	2	2	2	2	2	2	2	2	2	2
Cap, veh/h	173	133	256	128	176	42	139	1258	57	48	1060	65
Arrive On Green	0.17	0.17	0.17	0.19	0.19	0.19	0.08	0.36	0.36	0.03	0.31	0.31
Sat Flow, veh/h	1029	790	1518	661	912	216	1781	3455	156	1781	3390	207
Grp Volume(v), veh/h	228	0	193	257	0	0	96	399	413	14	351	360
Grp Sat Flow(s),veh/h/ln	1819	0	1518	1788	0	0	1781	1777	1834	1781	1777	1821
Q Serve(g_s), s	9.4	0.0	9.5	10.7	0.0	0.0	4.1	14.5	14.5	0.6	13.3	13.3
Cycle Q Clear(g_c), s	9.4	0.0	9.5	10.7	0.0	0.0	4.1	14.5	14.5	0.6	13.3	13.3
Prop In Lane	0.57		1.00	0.37		0.12	1.00		0.08	1.00		0.11
Lane Grp Cap(c), veh/h	306	0	256	345	0	0	139	647	668	48	556	570
V/C Ratio(X)	0.74	0.00	0.76	0.74	0.00	0.00	0.69	0.62	0.62	0.29	0.63	0.63
Avail Cap(c_a), veh/h	585	0	488	643	0	0	279	872	900	188	781	801
HCM Platoon Ratio	1.00	1.00	1.00	1.00	1.00	1.00	1.00	1.00	1.00	1.00	1.00	1.00
Upstream Filter(I)	1.00	0.00	1.00	1.00	0.00	0.00	1.00	1.00	1.00	1.00	1.00	1.00
Uniform Delay (d), s/veh	31.1	0.0	31.2	29.9	0.0	0.0	35.3	20.5	20.5	37.6	23.1	23.2
Incr Delay (d2), s/veh	3.6	0.0	4.5	3.2	0.0	0.0	2.3	3.5	3.4	1.3	4.3	4.2
Initial Q Delay(d3),s/veh	0.0	0.0	0.0	0.0	0.0	0.0	0.0	0.0	0.0	0.0	0.0	0.0
%ile BackOfQ(50%),veh/ln	4.3	0.0	3.7	4.7	0.0	0.0	1.8	6.1	6.2	0.3	5.8	5.9
Unsig. Movement Delay, s/veh												
LnGrp Delay(d),s/veh	34.7	0.0	35.7	33.1	0.0	0.0	37.6	24.0	23.9	38.8	27.4	27.3
LnGrp LOS	C	A	D	C	A	A	D	C	C	D	C	C
Approach Vol, veh/h		421			257			908			725	
Approach Delay, s/veh		35.1			33.1			25.4			27.6	
Approach LOS		D			C			C			C	

Timer - Assigned Phs	1	2		4	5	6		8
Phs Duration (G+Y+Rc), s	10.8	30.0		19.9	6.8	34.0		17.9
Change Period (Y+Rc), s	* 4.7	5.4		* 4.7	* 4.7	5.4		4.7
Max Green Setting (Gmax), s	* 13	34.6		* 28	* 8.3	38.6		25.3
Max Q Clear Time (g_c+I1), s	6.1	15.3		12.7	2.6	16.5		11.5
Green Ext Time (p_c), s	0.0	8.9		1.3	0.0	11.1		1.7

Intersection Summary	
HCM 6th Ctrl Delay	28.7
HCM 6th LOS	C

Notes

* HCM 6th computational engine requires equal clearance times for the phases crossing the barrier.



Movement	EBL	EBT	EBR	WBL	WBT	WBR	NBL	NBT	NBR	SBL	SBT	SBR
Lane Configurations												
Traffic Volume (veh/h)	169	124	332	46	115	57	246	778	48	30	497	97
Future Volume (veh/h)	169	124	332	46	115	57	246	778	48	30	497	97
Initial Q (Qb), veh	0	0	0	0	0	0	0	0	0	0	0	0
Ped-Bike Adj(A_pbT)	1.00		0.98	0.99		0.96	1.00		0.96	1.00		0.97
Parking Bus, Adj	1.00	1.00	1.00	1.00	1.00	1.00	1.00	1.00	1.00	1.00	1.00	1.00
Work Zone On Approach		No			No			No			No	
Adj Sat Flow, veh/h/ln	1870	1870	1870	1870	1870	1870	1870	1870	1870	1870	1870	1870
Adj Flow Rate, veh/h	235	172	461	54	135	67	328	1037	64	42	690	135
Peak Hour Factor	0.72	0.72	0.72	0.85	0.85	0.85	0.75	0.75	0.75	0.72	0.72	0.72
Percent Heavy Veh, %	2	2	2	2	2	2	2	2	2	2	2	2
Cap, veh/h	237	751	620	89	187	84	329	1381	85	58	752	147
Arrive On Green	0.13	0.40	0.40	0.22	0.22	0.22	0.18	0.41	0.41	0.03	0.26	0.26
Sat Flow, veh/h	1781	1870	1546	227	860	386	1781	3390	209	1781	2945	576
Grp Volume(v), veh/h	235	172	461	256	0	0	328	543	558	42	416	409
Grp Sat Flow(s),veh/h/ln	1781	1870	1546	1473	0	0	1781	1777	1822	1781	1777	1744
Q Serve(g_s), s	14.5	6.7	28.1	12.4	0.0	0.0	20.3	28.8	28.8	2.6	25.1	25.2
Cycle Q Clear(g_c), s	14.5	6.7	28.1	17.7	0.0	0.0	20.3	28.8	28.8	2.6	25.1	25.2
Prop In Lane	1.00		1.00	0.21		0.26	1.00		0.11	1.00		0.33
Lane Grp Cap(c), veh/h	237	751	620	360	0	0	329	724	742	58	454	445
V/C Ratio(X)	0.99	0.23	0.74	0.71	0.00	0.00	1.00	0.75	0.75	0.72	0.92	0.92
Avail Cap(c_a), veh/h	237	903	746	473	0	0	329	724	742	82	464	455
HCM Platoon Ratio	1.00	1.00	1.00	1.00	1.00	1.00	1.00	1.00	1.00	1.00	1.00	1.00
Upstream Filter(I)	1.00	1.00	1.00	1.00	0.00	0.00	1.00	1.00	1.00	1.00	1.00	1.00
Uniform Delay (d), s/veh	47.8	21.8	28.2	40.3	0.0	0.0	45.0	27.9	27.9	52.9	40.0	40.0
Incr Delay (d2), s/veh	55.6	0.1	2.4	1.9	0.0	0.0	48.6	4.7	4.6	7.4	23.2	23.7
Initial Q Delay(d3),s/veh	0.0	0.0	0.0	0.0	0.0	0.0	0.0	0.0	0.0	0.0	0.0	0.0
%ile BackOfQ(50%),veh/ln	10.1	2.9	10.6	6.7	0.0	0.0	13.3	12.9	13.2	1.3	13.8	13.6
Unsig. Movement Delay, s/veh												
LnGrp Delay(d),s/veh	103.4	21.8	30.6	42.2	0.0	0.0	93.5	32.6	32.5	60.3	63.1	63.7
LnGrp LOS	F	C	C	D	A	A	F	C	C	E	E	E
Approach Vol, veh/h		868			256			1429			867	
Approach Delay, s/veh		48.6			42.2			46.6			63.3	
Approach LOS		D			D			D			E	

Timer - Assigned Phs	1	2		4	5	6	7	8
Phs Duration (G+Y+Rc), s	9.2	50.7		50.5	26.0	33.9	20.3	30.2
Change Period (Y+Rc), s	5.6	5.7		6.2	5.6	5.7	5.6	6.2
Max Green Setting (Gmax), s	5.1	44.1		53.3	20.4	28.8	14.7	33.0
Max Q Clear Time (g_c+I1), s	4.6	30.8		30.1	22.3	27.2	16.5	19.7
Green Ext Time (p_c), s	0.0	7.7		1.5	0.0	1.0	0.0	1.0

Intersection Summary		
HCM 6th Ctrl Delay		51.0
HCM 6th LOS		D



Movement	EBL	EBT	EBR	WBL	WBT	WBR	NBL	NBT	NBR	SBL	SBT	SBR
Lane Configurations												
Traffic Volume (veh/h)	0	0	0	234	1	319	206	615	0	0	787	100
Future Volume (veh/h)	0	0	0	234	1	319	206	615	0	0	787	100
Initial Q (Qb), veh				0	0	0	0	0	0	0	0	0
Ped-Bike Adj(A_pbT)				1.00		0.97	1.00		1.00	1.00		0.96
Parking Bus, Adj				1.00	1.00	1.00	1.00	1.00	1.00	1.00	1.00	1.00
Work Zone On Approach					No			No			No	
Adj Sat Flow, veh/h/ln				1870	1870	1870	1870	1870	0	0	1870	1870
Adj Flow Rate, veh/h				300	1	409	219	654	0	0	915	116
Peak Hour Factor				0.78	0.78	0.78	0.94	0.94	0.94	0.86	0.86	0.86
Percent Heavy Veh, %				2	2	2	2	2	0	0	2	2
Cap, veh/h				547	2	474	252	2085	0	0	1256	159
Arrive On Green				0.31	0.31	0.31	0.14	0.59	0.00	0.00	0.40	0.40
Sat Flow, veh/h				1776	6	1540	1781	3647	0	0	3248	400
Grp Volume(v), veh/h				301	0	409	219	654	0	0	515	516
Grp Sat Flow(s),veh/h/ln				1782	0	1540	1781	1777	0	0	1777	1778
Q Serve(g_s), s				14.0	0.0	25.0	12.0	9.3	0.0	0.0	24.5	24.5
Cycle Q Clear(g_c), s				14.0	0.0	25.0	12.0	9.3	0.0	0.0	24.5	24.5
Prop In Lane				1.00		1.00	1.00		0.00	0.00		0.22
Lane Grp Cap(c), veh/h				549	0	474	252	2085	0	0	707	708
V/C Ratio(X)				0.55	0.00	0.86	0.87	0.31	0.00	0.00	0.73	0.73
Avail Cap(c_a), veh/h				695	0	601	345	2516	0	0	830	831
HCM Platoon Ratio				1.00	1.00	1.00	1.00	1.00	1.00	1.00	1.00	1.00
Upstream Filter(I)				1.00	0.00	1.00	1.00	1.00	0.00	0.00	1.00	1.00
Uniform Delay (d), s/veh				28.7	0.0	32.5	41.9	10.4	0.0	0.0	25.4	25.4
Incr Delay (d2), s/veh				0.9	0.0	10.2	12.8	0.3	0.0	0.0	5.5	5.5
Initial Q Delay(d3),s/veh				0.0	0.0	0.0	0.0	0.0	0.0	0.0	0.0	0.0
%ile BackOfQ(50%),veh/ln				6.0	0.0	10.4	6.0	3.3	0.0	0.0	10.8	10.8
Unsig. Movement Delay, s/veh												
LnGrp Delay(d),s/veh				29.6	0.0	42.7	54.7	10.7	0.0	0.0	30.9	30.9
LnGrp LOS				C	A	D	D	B	A	A	C	C
Approach Vol, veh/h					710			873			1031	
Approach Delay, s/veh					37.2			21.8			30.9	
Approach LOS					D			C			C	

Timer - Assigned Phs	1	2		4		6			
Phs Duration (G+Y+Rc), s	18.8	45.1		35.8		63.9			
Change Period (Y+Rc), s	4.7	5.4		5.1		5.4			
Max Green Setting (Gmax), s	13.0	46.6		38.9		70.6			
Max Q Clear Time (g_c+I1), s	4.0	26.5		27.0		11.3			
Green Ext Time (p_c), s	0.1	13.2		2.8		13.5			

Intersection Summary	
HCM 6th Ctrl Delay	29.6
HCM 6th LOS	C

Notes

* HCM 6th computational engine requires equal clearance times for the phases crossing the barrier.



Movement	EBL	EBT	EBR	WBL	WBT	WBR	NBL	NBT	NBR	SBL	SBT	SBR
Lane Configurations												
Traffic Volume (veh/h)	77	1	256	0	0	0	0	744	181	246	775	0
Future Volume (veh/h)	77	1	256	0	0	0	0	744	181	246	775	0
Initial Q (Qb), veh	0	0	0				0	0	0	0	0	0
Ped-Bike Adj(A_pbT)	1.00		0.97				1.00		0.95	1.00		1.00
Parking Bus, Adj	1.00	1.00	1.00				1.00	1.00	1.00	1.00	1.00	1.00
Work Zone On Approach		No						No			No	
Adj Sat Flow, veh/h/ln	1870	1870	1870				0	1870	1870	1870	1870	0
Adj Flow Rate, veh/h	128	2	427				0	836	203	283	891	0
Peak Hour Factor	0.60	0.60	0.60				0.89	0.89	0.89	0.87	0.87	0.87
Percent Heavy Veh, %	2	2	2				0	2	2	2	2	0
Cap, veh/h	139	2	463				0	1043	442	317	1840	0
Arrive On Green	0.38	0.38	0.38				0.00	0.29	0.29	0.18	0.52	0.00
Sat Flow, veh/h	366	6	1222				0	3647	1507	1781	3647	0
Grp Volume(v), veh/h	557	0	0				0	836	203	283	891	0
Grp Sat Flow(s),veh/h/ln	1594	0	0				0	1777	1507	1781	1777	0
Q Serve(g_s), s	33.8	0.0	0.0				0.0	22.0	11.1	15.7	16.3	0.0
Cycle Q Clear(g_c), s	33.8	0.0	0.0				0.0	22.0	11.1	15.7	16.3	0.0
Prop In Lane	0.23		0.77				0.00		1.00	1.00		0.00
Lane Grp Cap(c), veh/h	603	0	0				0	1043	442	317	1840	0
V/C Ratio(X)	0.92	0.00	0.00				0.00	0.80	0.46	0.89	0.48	0.00
Avail Cap(c_a), veh/h	693	0	0				0	1105	469	515	2299	0
HCM Platoon Ratio	1.00	1.00	1.00				1.00	1.00	1.00	1.00	1.00	1.00
Upstream Filter(I)	1.00	0.00	0.00				0.00	1.00	1.00	1.00	1.00	0.00
Uniform Delay (d), s/veh	30.1	0.0	0.0				0.0	33.1	29.2	40.7	15.7	0.0
Incr Delay (d2), s/veh	16.7	0.0	0.0				0.0	5.9	2.7	7.0	0.7	0.0
Initial Q Delay(d3),s/veh	0.0	0.0	0.0				0.0	0.0	0.0	0.0	0.0	0.0
%ile BackOfQ(50%),veh/ln	15.3	0.0	0.0				0.0	9.9	4.2	7.3	6.3	0.0
Unsig. Movement Delay, s/veh												
LnGrp Delay(d),s/veh	46.8	0.0	0.0				0.0	38.9	31.9	47.7	16.4	0.0
LnGrp LOS	D	A	A				A	D	C	D	B	A
Approach Vol, veh/h		557						1039			1174	
Approach Delay, s/veh		46.8						37.5			24.0	
Approach LOS		D						D			C	

Timer - Assigned Phs		2			5	6		8				
Phs Duration (G+Y+Rc), s		57.8			22.7	35.1		43.4				
Change Period (Y+Rc), s		5.4			* 4.7	5.4		5.1				
Max Green Setting (Gmax), s		65.5			* 29	31.5		44.0				
Max Q Clear Time (g_c+I1), s		18.3			17.7	24.0		35.8				
Green Ext Time (p_c), s		19.1			0.3	5.7		2.5				

Intersection Summary												
HCM 6th Ctrl Delay			33.7									
HCM 6th LOS			C									

Notes

* HCM 6th computational engine requires equal clearance times for the phases crossing the barrier.



Movement	EBL	EBT	EBR	WBL	WBT	WBR	NBL	NBT	NBR	SBL	SBT	SBR
Lane Configurations												
Traffic Volume (veh/h)	0	0	0	105	2	129	0	550	184	0	410	87
Future Volume (veh/h)	0	0	0	105	2	129	0	550	184	0	410	87
Initial Q (Qb), veh				0	0	0	0	0	0	0	0	0
Ped-Bike Adj(A_pbT)				1.00		0.97	1.00		0.96	1.00		0.96
Parking Bus, Adj				1.00	1.00	1.00	1.00	1.00	1.00	1.00	1.00	1.00
Work Zone On Approach					No			No			No	
Adj Sat Flow, veh/h/ln				1870	1870	1870	0	1870	1870	0	1870	1870
Adj Flow Rate, veh/h				142	3	174	0	640	214	0	494	105
Peak Hour Factor				0.74	0.74	0.74	0.86	0.86	0.86	0.83	0.83	0.83
Percent Heavy Veh, %				2	2	2	0	2	2	0	2	2
Cap, veh/h				398	8	349	0	1469	629	0	1740	359
Arrive On Green				0.23	0.23	0.23	0.00	0.41	0.41	0.00	0.41	0.41
Sat Flow, veh/h				1746	37	1530	0	3647	1521	0	4376	867
Grp Volume(v), veh/h				145	0	174	0	640	214	0	397	202
Grp Sat Flow(s),veh/h/ln				1783	0	1530	0	1777	1521	0	1702	1671
Q Serve(g_s), s				2.4	0.0	3.5	0.0	4.5	3.3	0.0	2.7	2.8
Cycle Q Clear(g_c), s				2.4	0.0	3.5	0.0	4.5	3.3	0.0	2.7	2.8
Prop In Lane				0.98		1.00	0.00		1.00	0.00		0.52
Lane Grp Cap(c), veh/h				406	0	349	0	1469	629	0	1407	691
V/C Ratio(X)				0.36	0.00	0.50	0.00	0.44	0.34	0.00	0.28	0.29
Avail Cap(c_a), veh/h				2450	0	2103	0	6077	2600	0	5821	2857
HCM Platoon Ratio				1.00	1.00	1.00	1.00	1.00	1.00	1.00	1.00	1.00
Upstream Filter(I)				1.00	0.00	1.00	0.00	1.00	1.00	0.00	1.00	1.00
Uniform Delay (d), s/veh				11.3	0.0	11.7	0.0	7.3	7.0	0.0	6.8	6.8
Incr Delay (d2), s/veh				0.5	0.0	1.1	0.0	0.2	0.3	0.0	0.1	0.2
Initial Q Delay(d3),s/veh				0.0	0.0	0.0	0.0	0.0	0.0	0.0	0.0	0.0
%ile BackOfQ(50%),veh/ln				0.8	0.0	1.0	0.0	0.9	0.6	0.0	0.5	0.6
Unsig. Movement Delay, s/veh												
LnGrp Delay(d),s/veh				11.8	0.0	12.8	0.0	7.5	7.3	0.0	6.9	7.1
LnGrp LOS				B	A	B	A	A	A	A	A	A
Approach Vol, veh/h					319			854			599	
Approach Delay, s/veh					12.4			7.5			6.9	
Approach LOS					B			A			A	

Timer - Assigned Phs	2		6		8			
Phs Duration (G+Y+Rc), s	20.8		20.8		14.0			
Change Period (Y+Rc), s	6.4		6.4		6.1			
Max Green Setting (Gmax), s	59.6		59.6		47.9			
Max Q Clear Time (g_c+I1), s	6.5		4.8		5.5			
Green Ext Time (p_c), s	5.6		4.1		1.5			

Intersection Summary		
HCM 6th Ctrl Delay	8.2	
HCM 6th LOS	A	



Movement	EBL	EBT	EBR	WBL	WBT	WBR	NBL	NBT	NBR	SBL	SBT	SBR
Lane Configurations												
Traffic Volume (veh/h)	88	2	187	0	0	0	0	647	73	73	440	0
Future Volume (veh/h)	88	2	187	0	0	0	0	647	73	73	440	0
Initial Q (Qb), veh	0	0	0				0	0	0	0	0	0
Ped-Bike Adj(A_pbT)	1.00		0.93				1.00		0.96	1.00		1.00
Parking Bus, Adj	1.00	1.00	1.00				1.00	1.00	1.00	1.00	1.00	1.00
Work Zone On Approach		No						No			No	
Adj Sat Flow, veh/h/ln	1870	1870	1870				0	1870	1870	1870	1870	0
Adj Flow Rate, veh/h	106	2	225				0	752	85	100	603	0
Peak Hour Factor	0.83	0.83	0.83				0.86	0.86	0.86	0.73	0.73	0.73
Percent Heavy Veh, %	2	2	2				0	2	2	2	2	0
Cap, veh/h	326	6	485				0	1280	546	136	1972	0
Arrive On Green	0.19	0.19	0.19				0.00	0.36	0.36	0.08	0.55	0.00
Sat Flow, veh/h	1750	33	2606				0	3647	1516	1781	3647	0
Grp Volume(v), veh/h	108	0	225				0	752	85	100	603	0
Grp Sat Flow(s),veh/h/ln	1783	0	1303				0	1777	1516	1781	1777	0
Q Serve(g_s), s	2.5	0.0	3.7				0.0	8.3	1.8	2.6	4.4	0.0
Cycle Q Clear(g_c), s	2.5	0.0	3.7				0.0	8.3	1.8	2.6	4.4	0.0
Prop In Lane	0.98		1.00				0.00		1.00	1.00		0.00
Lane Grp Cap(c), veh/h	332	0	485				0	1280	546	136	1972	0
V/C Ratio(X)	0.33	0.00	0.46				0.00	0.59	0.16	0.73	0.31	0.00
Avail Cap(c_a), veh/h	1401	0	2048				0	3212	1370	750	5127	0
HCM Platoon Ratio	1.00	1.00	1.00				1.00	1.00	1.00	1.00	1.00	1.00
Upstream Filter(I)	1.00	0.00	1.00				0.00	1.00	1.00	1.00	1.00	0.00
Uniform Delay (d), s/veh	17.0	0.0	17.5				0.0	12.5	10.5	21.8	5.8	0.0
Incr Delay (d2), s/veh	0.6	0.0	0.7				0.0	0.4	0.1	7.4	0.1	0.0
Initial Q Delay(d3),s/veh	0.0	0.0	0.0				0.0	0.0	0.0	0.0	0.0	0.0
%ile BackOfQ(50%),veh/ln	1.0	0.0	1.0				0.0	2.6	0.5	1.2	1.0	0.0
Unsig. Movement Delay, s/veh												
LnGrp Delay(d),s/veh	17.6	0.0	18.2				0.0	13.0	10.6	29.2	5.8	0.0
LnGrp LOS	B	A	B				A	B	B	C	A	A
Approach Vol, veh/h		333						837			703	
Approach Delay, s/veh		18.0						12.7			9.2	
Approach LOS		B						B			A	

Timer - Assigned Phs	1	2	4	6
Phs Duration (G+Y+Rc), s	9.4	23.8	15.1	33.2
Change Period (Y+Rc), s	5.7	6.4	6.1	6.4
Max Green Setting (Gmax), s	3.8	43.6	37.9	69.6
Max Q Clear Time (g_c+I1), s	4.6	10.3	5.7	6.4
Green Ext Time (p_c), s	0.2	5.8	1.7	4.4

Intersection Summary	
HCM 6th Ctrl Delay	12.3
HCM 6th LOS	B

Notes

* HCM 6th computational engine requires equal clearance times for the phases crossing the barrier.



Movement	EBL	EBT	EBR	WBL	WBT	WBR	NBL	NBT	NBR	SBL	SBT	SBR
Lane Configurations												
Traffic Volume (veh/h)	72	91	34	2	91	61	56	101	1	120	79	32
Future Volume (veh/h)	72	91	34	2	91	61	56	101	1	120	79	32
Initial Q (Qb), veh	0	0	0	0	0	0	0	0	0	0	0	0
Ped-Bike Adj(A_pbT)	1.00		0.96	1.00		0.95	1.00		0.98	1.00		0.96
Parking Bus, Adj	1.00	1.00	1.00	1.00	1.00	1.00	1.00	1.00	1.00	1.00	1.00	1.00
Work Zone On Approach		No			No			No			No	
Adj Sat Flow, veh/h/ln	1870	1870	1870	1870	1870	1870	1870	1870	1870	1870	1870	1870
Adj Flow Rate, veh/h	91	115	43	3	121	81	78	140	1	222	146	59
Peak Hour Factor	0.79	0.79	0.79	0.75	0.75	0.75	0.72	0.72	0.72	0.54	0.54	0.54
Percent Heavy Veh, %	2	2	2	2	2	2	2	2	2	2	2	2
Cap, veh/h	117	341	277	7	225	180	100	1446	629	248	1215	466
Arrive On Green	0.07	0.18	0.18	0.00	0.12	0.12	0.06	0.41	0.41	0.14	0.49	0.49
Sat Flow, veh/h	1781	1870	1522	1781	1870	1499	1781	3554	1546	1781	2481	951
Grp Volume(v), veh/h	91	115	43	3	121	81	78	140	1	222	102	103
Grp Sat Flow(s),veh/h/ln	1781	1870	1522	1781	1870	1499	1781	1777	1546	1781	1777	1655
Q Serve(g_s), s	3.6	3.9	1.7	0.1	4.4	3.6	3.1	1.8	0.0	8.9	2.3	2.4
Cycle Q Clear(g_c), s	3.6	3.9	1.7	0.1	4.4	3.6	3.1	1.8	0.0	8.9	2.3	2.4
Prop In Lane	1.00		1.00	1.00		1.00	1.00		1.00	1.00		0.57
Lane Grp Cap(c), veh/h	117	341	277	7	225	180	100	1446	629	248	870	811
V/C Ratio(X)	0.78	0.34	0.16	0.42	0.54	0.45	0.78	0.10	0.00	0.89	0.12	0.13
Avail Cap(c_a), veh/h	258	929	756	123	787	631	241	1446	629	248	870	811
HCM Platoon Ratio	1.00	1.00	1.00	1.00	1.00	1.00	1.00	1.00	1.00	1.00	1.00	1.00
Upstream Filter(I)	1.00	1.00	1.00	1.00	1.00	1.00	1.00	1.00	1.00	1.00	1.00	1.00
Uniform Delay (d), s/veh	33.3	25.8	25.0	36.0	30.0	29.7	33.8	13.3	12.8	30.7	10.0	10.1
Incr Delay (d2), s/veh	4.1	0.6	0.3	13.6	2.0	1.7	4.8	0.1	0.0	30.3	0.3	0.3
Initial Q Delay(d3),s/veh	0.0	0.0	0.0	0.0	0.0	0.0	0.0	0.0	0.0	0.0	0.0	0.0
%ile BackOfQ(50%),veh/ln	1.7	1.7	0.6	0.1	2.0	1.4	1.4	0.7	0.0	5.7	0.9	0.9
Unsig. Movement Delay, s/veh												
LnGrp Delay(d),s/veh	37.4	26.4	25.2	49.6	32.0	31.4	38.5	13.4	12.8	60.9	10.3	10.4
LnGrp LOS	D	C	C	D	C	C	D	B	B	E	B	B
Approach Vol, veh/h		249			205			219			427	
Approach Delay, s/veh		30.2			32.0			22.3			36.6	
Approach LOS		C			C			C			D	

Timer - Assigned Phs	1	2	3	4	5	6	7	8
Phs Duration (G+Y+Rc), s	8.7	40.6	9.4	13.8	14.7	34.6	4.9	18.3
Change Period (Y+Rc), s	4.6	5.1	4.6	5.1	4.6	5.1	4.6	5.1
Max Green Setting (Gmax), s	9.8	29.8	10.5	30.5	10.1	29.5	5.0	36.0
Max Q Clear Time (g_c+I1), s	5.1	4.4	5.6	6.4	10.9	3.8	2.1	5.9
Green Ext Time (p_c), s	0.0	1.6	0.0	0.9	0.0	1.1	0.0	0.8

Intersection Summary	
HCM 6th Ctrl Delay	31.5
HCM 6th LOS	C



Movement	EBL	EBT	EBR	WBL	WBT	WBR	NBL	NBT	NBR	SBL	SBT	SBR
Lane Configurations												
Traffic Volume (veh/h)	143	77	70	44	62	176	67	470	63	367	501	189
Future Volume (veh/h)	143	77	70	44	62	176	67	470	63	367	501	189
Initial Q (Qb), veh	0	0	0	0	0	0	0	0	0	0	0	0
Ped-Bike Adj(A_pbT)	1.00		0.96	1.00		0.96	1.00		0.97	1.00		0.97
Parking Bus, Adj	1.00	1.00	1.00	1.00	1.00	1.00	1.00	1.00	1.00	1.00	1.00	1.00
Work Zone On Approach		No			No			No			No	
Adj Sat Flow, veh/h/ln	1870	1870	1870	1870	1870	1870	1870	1870	1870	1870	1870	1870
Adj Flow Rate, veh/h	188	101	92	53	75	212	78	547	73	459	626	236
Peak Hour Factor	0.76	0.76	0.76	0.83	0.83	0.83	0.86	0.86	0.86	0.80	0.80	0.80
Percent Heavy Veh, %	2	2	2	2	2	2	2	2	2	2	2	2
Cap, veh/h	282	296	240	275	289	580	116	731	97	390	984	371
Arrive On Green	0.16	0.16	0.16	0.15	0.15	0.15	0.06	0.23	0.23	0.22	0.39	0.39
Sat Flow, veh/h	1781	1870	1515	1781	1870	1514	1781	3138	417	1781	2505	944
Grp Volume(v), veh/h	188	101	92	53	75	212	78	309	311	459	444	418
Grp Sat Flow(s),veh/h/ln	1781	1870	1515	1781	1870	1514	1781	1777	1778	1781	1777	1672
Q Serve(g_s), s	11.2	5.4	6.1	2.9	4.0	11.5	4.8	18.1	18.3	24.6	22.7	22.8
Cycle Q Clear(g_c), s	11.2	5.4	6.1	2.9	4.0	11.5	4.8	18.1	18.3	24.6	22.7	22.8
Prop In Lane	1.00		1.00	1.00		1.00	1.00		0.23	1.00		0.56
Lane Grp Cap(c), veh/h	282	296	240	275	289	580	116	414	414	390	698	657
V/C Ratio(X)	0.67	0.34	0.38	0.19	0.26	0.37	0.67	0.75	0.75	1.18	0.64	0.64
Avail Cap(c_a), veh/h	523	549	445	570	599	832	203	473	473	390	698	657
HCM Platoon Ratio	1.00	1.00	1.00	1.00	1.00	1.00	1.00	1.00	1.00	1.00	1.00	1.00
Upstream Filter(I)	1.00	1.00	1.00	1.00	1.00	1.00	1.00	1.00	1.00	1.00	1.00	1.00
Uniform Delay (d), s/veh	44.5	42.1	42.4	41.4	41.9	25.7	51.4	40.0	40.1	43.9	27.6	27.6
Incr Delay (d2), s/veh	3.8	1.0	1.4	0.1	0.2	0.1	2.5	10.0	10.3	103.6	3.7	4.0
Initial Q Delay(d3),s/veh	0.0	0.0	0.0	0.0	0.0	0.0	0.0	0.0	0.0	0.0	0.0	0.0
%ile BackOfQ(50%),veh/ln	5.1	2.5	2.3	1.3	1.8	4.0	2.2	8.9	9.0	21.7	10.0	9.4
Unsig. Movement Delay, s/veh												
LnGrp Delay(d),s/veh	48.4	43.1	43.8	41.6	42.1	25.8	53.9	50.1	50.4	147.5	31.3	31.6
LnGrp LOS	D	D	D	D	D	C	D	D	D	F	C	C
Approach Vol, veh/h		381			340			698			1321	
Approach Delay, s/veh		45.9			31.9			50.7			71.8	
Approach LOS		D			C			D			E	

Timer - Assigned Phs	1	2		4	5	6		8
Phs Duration (G+Y+Rc), s	12.0	51.5		23.8	30.0	33.5		25.2
Change Period (Y+Rc), s	* 4.7	* 7.3		6.4	5.4	7.3		7.4
Max Green Setting (Gmax), s	* 13	* 43		36.0	24.6	29.9		33.0
Max Q Clear Time (g_c+I1), s	6.8	24.8		13.5	26.6	20.3		13.2
Green Ext Time (p_c), s	0.0	10.4		0.7	0.0	4.8		2.0

Intersection Summary		
HCM 6th Ctrl Delay	57.8	
HCM 6th LOS	E	

Notes

* HCM 6th computational engine requires equal clearance times for the phases crossing the barrier.

Intersection	
Int Delay, s/veh	1.2

Movement	EBL	EBR	NBL	NBT	SBT	SBR
Lane Configurations						
Traffic Vol, veh/h	4	111	124	670	387	10
Future Vol, veh/h	4	111	124	670	387	10
Conflicting Peds, #/hr	10	10	10	0	0	10
Sign Control	Free	Free	Free	Free	Stop	Stop
RT Channelized	-	None	-	None	-	None
Storage Length	0	-	-	-	-	-
Veh in Median Storage, #	2	-	-	0	0	-
Grade, %	0	-	-	0	0	-
Peak Hour Factor	63	63	70	70	75	75
Heavy Vehicles, %	2	2	2	2	2	2
Mvmt Flow	6	176	177	957	516	13

Major/Minor	Major1		Minor2	
Conflicting Flow All	10	0	1321	20
Stage 1	-	-	10	-
Stage 2	-	-	1311	-
Critical Hdwy	4.14	-	6.54	6.94
Critical Hdwy Stg 1	-	-	-	-
Critical Hdwy Stg 2	-	-	5.54	-
Follow-up Hdwy	2.22	-	4.02	3.32
Pot Cap-1 Maneuver	1608	-	~ 155	1053
Stage 1	-	-	-	-
Stage 2	-	-	~ 227	-
Platoon blocked, %		-		
Mov Cap-1 Maneuver	1593	-	0	1033
Mov Cap-2 Maneuver	-	-	0	-
Stage 1	-	-	0	-
Stage 2	-	-	0	-

Approach	NB	SB
HCM Control Delay, s	1.8	
HCM LOS		-

Minor Lane/Major Mvmt	NBL	NBT	SBLn1	SBLn2
Capacity (veh/h)	1593	-	-	1033
HCM Lane V/C Ratio	0.111	-	-	0.263
HCM Control Delay (s)	7.5	0.7	-	9.7
HCM Lane LOS	A	A	-	A
HCM 95th %tile Q(veh)	0.4	-	-	1.1

Notes			
~: Volume exceeds capacity	$: Delay exceeds 300s	+: Computation Not Defined	*: All major volume in platoon



Movement	WBL	WBR	NBT	NBR	SBL	SBT
Lane Configurations						
Traffic Volume (veh/h)	11	93	544	53	90	302
Future Volume (veh/h)	11	93	544	53	90	302
Initial Q (Qb), veh	0	0	0	0	0	0
Ped-Bike Adj(A_pbT)	1.00	1.00		0.96	1.00	
Parking Bus, Adj	1.00	1.00	1.00	1.00	1.00	1.00
Work Zone On Approach	No		No			No
Adj Sat Flow, veh/h/ln	1870	1870	1870	1870	1870	1870
Adj Flow Rate, veh/h	12	102	697	68	105	351
Peak Hour Factor	0.91	0.91	0.78	0.78	0.86	0.86
Percent Heavy Veh, %	2	2	2	2	2	2
Cap, veh/h	157	140	1524	149	203	1244
Arrive On Green	0.09	0.09	0.47	0.47	0.11	0.66
Sat Flow, veh/h	1781	1585	3351	318	1781	1870
Grp Volume(v), veh/h	12	102	380	385	105	351
Grp Sat Flow(s),veh/h/ln	1781	1585	1777	1798	1781	1870
Q Serve(g_s), s	0.4	3.6	8.2	8.2	3.1	4.4
Cycle Q Clear(g_c), s	0.4	3.6	8.2	8.2	3.1	4.4
Prop In Lane	1.00	1.00		0.18	1.00	
Lane Grp Cap(c), veh/h	157	140	831	841	203	1244
V/C Ratio(X)	0.08	0.73	0.46	0.46	0.52	0.28
Avail Cap(c_a), veh/h	873	777	2262	2289	983	3615
HCM Platoon Ratio	1.00	1.00	1.00	1.00	1.00	1.00
Upstream Filter(I)	1.00	1.00	1.00	1.00	1.00	1.00
Uniform Delay (d), s/veh	23.7	25.2	10.2	10.2	23.6	3.9
Incr Delay (d2), s/veh	0.2	7.1	1.4	1.4	0.8	0.4
Initial Q Delay(d3),s/veh	0.0	0.0	0.0	0.0	0.0	0.0
%ile BackOfQ(50%),veh/ln	0.1	0.3	2.8	2.8	1.2	1.0
Unsig. Movement Delay, s/veh						
LnGrp Delay(d),s/veh	23.9	32.3	11.6	11.6	24.4	4.4
LnGrp LOS	C	C	B	B	C	A
Approach Vol, veh/h	114		765			456
Approach Delay, s/veh	31.4		11.6			9.0
Approach LOS	C		B			A

Timer - Assigned Phs		2		4	5	6
Phs Duration (G+Y+Rc), s		45.5		11.2	11.2	34.3
Change Period (Y+Rc), s		* 7.8		6.2	* 4.7	7.8
Max Green Setting (Gmax), s		* 1.1E2		27.8	* 31	72.2
Max Q Clear Time (g_c+I1), s		6.4		5.6	5.1	10.2
Green Ext Time (p_c), s		6.3		0.3	0.1	15.9

Intersection Summary	
HCM 6th Ctrl Delay	12.4
HCM 6th LOS	B

Notes

* HCM 6th computational engine requires equal clearance times for the phases crossing the barrier.

Intersection	
Int Delay, s/veh	4.5

Movement	EBT	EBR	WBL	WBT	NBL	NBR
Lane Configurations						
Traffic Vol, veh/h	77	28	34	134	50	79
Future Vol, veh/h	77	28	34	134	50	79
Conflicting Peds, #/hr	0	10	10	0	10	10
Sign Control	Free	Free	Free	Free	Stop	Stop
RT Channelized	-	None	-	None	-	None
Storage Length	-	-	-	-	0	-
Veh in Median Storage, #	0	-	-	0	0	-
Grade, %	0	-	-	0	0	-
Peak Hour Factor	91	91	57	57	70	70
Heavy Vehicles, %	2	2	2	2	2	2
Mvmt Flow	85	31	60	235	71	113

Major/Minor	Major1		Major2		Minor1	
Conflicting Flow All	0	0	126	0	476	121
Stage 1	-	-	-	-	111	-
Stage 2	-	-	-	-	365	-
Critical Hdwy	-	-	4.12	-	6.42	6.22
Critical Hdwy Stg 1	-	-	-	-	5.42	-
Critical Hdwy Stg 2	-	-	-	-	5.42	-
Follow-up Hdwy	-	-	2.218	-	3.518	3.318
Pot Cap-1 Maneuver	-	-	1460	-	548	930
Stage 1	-	-	-	-	914	-
Stage 2	-	-	-	-	702	-
Platoon blocked, %	-	-		-		
Mov Cap-1 Maneuver	-	-	1446	-	511	912
Mov Cap-2 Maneuver	-	-	-	-	511	-
Stage 1	-	-	-	-	905	-
Stage 2	-	-	-	-	662	-

Approach	EB	WB	NB
HCM Control Delay, s	0	1.5	12
HCM LOS			B

Minor Lane/Major Mvmt	NBLn1	EBT	EBR	WBL	WBT
Capacity (veh/h)	699	-	-	1446	-
HCM Lane V/C Ratio	0.264	-	-	0.041	-
HCM Control Delay (s)	12	-	-	7.6	0
HCM Lane LOS	B	-	-	A	A
HCM 95th %tile Q(veh)	1.1	-	-	0.1	-

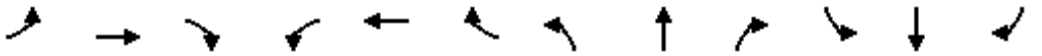

Movement	EBL	EBT	EBR	WBL	WBT	WBR	NBL	NBT	NBR	SBL	SBT	SBR
Lane Configurations												
Traffic Volume (veh/h)	83	47	27	5	49	83	30	504	11	97	271	93
Future Volume (veh/h)	83	47	27	5	49	83	30	504	11	97	271	93
Initial Q (Qb), veh	0	0	0	0	0	0	0	0	0	0	0	0
Ped-Bike Adj(A_pbT)	1.00		0.97	1.00		1.00	1.00		0.97	1.00		0.97
Parking Bus, Adj	1.00	1.00	1.00	1.00	1.00	1.00	1.00	1.00	1.00	1.00	1.00	1.00
Work Zone On Approach		No			No			No			No	
Adj Sat Flow, veh/h/ln	1870	1870	1870	1870	1870	1870	1870	1870	1870	1870	1870	1870
Adj Flow Rate, veh/h	87	49	28	6	61	0	35	593	13	126	352	121
Peak Hour Factor	0.95	0.95	0.95	0.80	0.80	0.80	0.85	0.85	0.85	0.77	0.77	0.77
Percent Heavy Veh, %	2	2	2	2	2	2	2	2	2	2	2	2
Cap, veh/h	117	557	289	14	681		67	1041	451	168	906	306
Arrive On Green	0.07	0.25	0.25	0.01	0.19	0.00	0.04	0.29	0.29	0.09	0.35	0.35
Sat Flow, veh/h	1781	2234	1159	1781	3554	1585	1781	3554	1538	1781	2588	874
Grp Volume(v), veh/h	87	38	39	6	61	0	35	593	13	126	240	233
Grp Sat Flow(s),veh/h/ln	1781	1777	1616	1781	1777	1585	1781	1777	1538	1781	1777	1685
Q Serve(g_s), s	2.7	0.9	1.1	0.2	0.8	0.0	1.1	8.0	0.3	3.9	5.7	5.9
Cycle Q Clear(g_c), s	2.7	0.9	1.1	0.2	0.8	0.0	1.1	8.0	0.3	3.9	5.7	5.9
Prop In Lane	1.00		0.72	1.00		1.00	1.00		1.00	1.00		0.52
Lane Grp Cap(c), veh/h	117	443	403	14	681		67	1041	451	168	622	590
V/C Ratio(X)	0.74	0.09	0.10	0.42	0.09		0.53	0.57	0.03	0.75	0.39	0.40
Avail Cap(c_a), veh/h	485	1410	1282	233	2317		390	3090	1337	894	2047	1941
HCM Platoon Ratio	1.00	1.00	1.00	1.00	1.00	1.00	1.00	1.00	1.00	1.00	1.00	1.00
Upstream Filter(I)	1.00	1.00	1.00	1.00	1.00	0.00	1.00	1.00	1.00	1.00	1.00	1.00
Uniform Delay (d), s/veh	26.0	16.3	16.3	27.9	18.8	0.0	26.7	17.0	14.3	25.0	13.8	13.9
Incr Delay (d2), s/veh	8.8	0.1	0.1	18.8	0.1	0.0	6.3	0.5	0.0	6.5	0.4	0.4
Initial Q Delay(d3),s/veh	0.0	0.0	0.0	0.0	0.0	0.0	0.0	0.0	0.0	0.0	0.0	0.0
%ile BackOfQ(50%),veh/ln	1.3	0.3	0.3	0.1	0.3	0.0	0.5	2.8	0.1	1.8	2.0	1.9
Unsig. Movement Delay, s/veh												
LnGrp Delay(d),s/veh	34.8	16.4	16.4	46.8	18.9	0.0	33.0	17.5	14.3	31.5	14.2	14.3
LnGrp LOS	C	B	B	D	B		C	B	B	C	B	B
Approach Vol, veh/h		164			67	A		641			599	
Approach Delay, s/veh		26.2			21.4			18.3			17.9	
Approach LOS		C			C			B			B	

Timer - Assigned Phs	1	2	3	4	5	6	7	8
Phs Duration (G+Y+Rc), s	9.9	22.4	5.1	19.2	6.7	25.6	8.3	15.9
Change Period (Y+Rc), s	4.6	5.8	4.6	5.1	4.6	5.8	4.6	5.1
Max Green Setting (Gmax), s	28.4	49.2	7.4	44.9	12.4	65.2	15.4	36.9
Max Q Clear Time (g_c+I1), s	5.9	10.0	2.2	3.1	3.1	7.9	4.7	2.8
Green Ext Time (p_c), s	0.3	4.2	0.0	0.4	0.0	2.9	0.1	0.3

Intersection Summary	
HCM 6th Ctrl Delay	19.1
HCM 6th LOS	B

Notes

Unsignalized Delay for [WBR] is excluded from calculations of the approach delay and intersection delay.

Intersection	
Intersection Delay, s/veh	102.5
Intersection LOS	F

Movement	EBL	EBT	EBR	WBL	WBT	WBR	NBL	NBT	NBR	SBL	SBT	SBR
Lane Configurations												
Traffic Vol, veh/h	125	174	25	38	264	28	47	121	104	63	47	215
Future Vol, veh/h	125	174	25	38	264	28	47	121	104	63	47	215
Peak Hour Factor	0.69	0.69	0.69	0.73	0.73	0.73	0.67	0.67	0.67	0.77	0.77	0.77
Heavy Vehicles, %	2	2	2	2	2	2	2	2	2	2	2	2
Mvmt Flow	181	252	36	52	362	38	70	181	155	82	61	279
Number of Lanes	0	1	1	0	1	0	0	1	0	0	1	1

Approach	EB	WB	NB	SB
Opposing Approach	WB	EB	SB	NB
Opposing Lanes	1	2	2	1
Conflicting Approach Left	SB	NB	EB	WB
Conflicting Lanes Left	2	1	2	1
Conflicting Approach Right	NB	SB	WB	EB
Conflicting Lanes Right	1	2	1	2
HCM Control Delay	118.1	153	104.4	29.3
HCM LOS	F	F	F	D

Lane	NBLn1	EBLn1	EBLn2	WBLn1	SBLn1	SBLn2
Vol Left, %	17%	42%	0%	12%	57%	0%
Vol Thru, %	44%	58%	0%	80%	43%	0%
Vol Right, %	38%	0%	100%	8%	0%	100%
Sign Control	Stop	Stop	Stop	Stop	Stop	Stop
Traffic Vol by Lane	272	299	25	330	110	215
LT Vol	47	125	0	38	63	0
Through Vol	121	174	0	264	47	0
RT Vol	104	0	25	28	0	215
Lane Flow Rate	406	433	36	452	143	279
Geometry Grp	6	7	7	6	7	7
Degree of Util (X)	1.075	1.148	0.087	1.218	0.397	0.7
Departure Headway (Hd)	10.675	10.407	9.451	10.526	11.213	10.171
Convergence, Y/N	Yes	Yes	Yes	Yes	Yes	Yes
Cap	345	351	382	348	323	357
Service Time	8.675	8.107	7.151	8.526	8.913	7.871
HCM Lane V/C Ratio	1.177	1.234	0.094	1.299	0.443	0.782
HCM Control Delay	104.4	126.9	13	153	21.1	33.5
HCM Lane LOS	F	F	B	F	C	D
HCM 95th-tile Q	13.3	15.8	0.3	18	1.8	5.1

Intersection	
Intersection Delay, s/veh	146.3
Intersection LOS	F

Movement	EBL	EBT	EBR	WBL	WBT	WBR	NBL	NBT	NBR	SBL	SBT	SBR
Lane Configurations		↕			↕			↕			↕	
Traffic Vol, veh/h	50	267	22	0	257	113	21	169	4	131	133	53
Future Vol, veh/h	50	267	22	0	257	113	21	169	4	131	133	53
Peak Hour Factor	0.68	0.68	0.68	0.70	0.70	0.70	0.64	0.64	0.64	0.69	0.69	0.69
Heavy Vehicles, %	2	2	2	2	2	2	2	2	2	2	2	2
Mvmt Flow	74	393	32	0	367	161	33	264	6	190	193	77
Number of Lanes	0	1	0	0	1	0	0	1	0	0	1	0

Approach	EB	WB	NB	SB
Opposing Approach	WB	EB	SB	NB
Opposing Lanes	1	1	1	1
Conflicting Approach Left	SB	NB	EB	WB
Conflicting Lanes Left	1	1	1	1
Conflicting Approach Right	NB	SB	WB	EB
Conflicting Lanes Right	1	1	1	1
HCM Control Delay	170.6	189	50.8	133.7
HCM LOS	F	F	F	F

Lane	NBLn1	EBLn1	WBLn1	SBLn1
Vol Left, %	11%	15%	0%	41%
Vol Thru, %	87%	79%	69%	42%
Vol Right, %	2%	6%	31%	17%
Sign Control	Stop	Stop	Stop	Stop
Traffic Vol by Lane	194	339	370	317
LT Vol	21	50	0	131
Through Vol	169	267	257	133
RT Vol	4	22	113	53
Lane Flow Rate	303	499	529	459
Geometry Grp	1	1	1	1
Degree of Util (X)	0.809	1.264	1.314	1.163
Departure Headway (Hd)	11.975	10.549	10.236	10.692
Convergence, Y/N	Yes	Yes	Yes	Yes
Cap	306	349	359	345
Service Time	9.975	8.549	8.236	8.692
HCM Lane V/C Ratio	0.99	1.43	1.474	1.33
HCM Control Delay	50.8	170.6	189	133.7
HCM Lane LOS	F	F	F	F
HCM 95th-tile Q	6.6	19.5	21.8	16

Intersection	
Intersection Delay, s/veh	139.1
Intersection LOS	F

Movement	EBL	EBT	EBR	WBL	WBT	WBR	NBL	NBT	NBR	SBL	SBT	SBR
Lane Configurations												
Traffic Vol, veh/h	100	233	13	36	287	124	8	175	17	74	156	181
Future Vol, veh/h	100	233	13	36	287	124	8	175	17	74	156	181
Peak Hour Factor	0.61	0.61	0.61	0.70	0.70	0.70	0.87	0.87	0.87	0.76	0.76	0.76
Heavy Vehicles, %	2	2	2	2	2	2	2	2	2	2	2	2
Mvmt Flow	164	382	21	51	410	177	9	201	20	97	205	238
Number of Lanes	1	1	0	0	1	0	1	1	0	1	1	0

Approach	EB	WB	NB	SB
Opposing Approach	WB	EB	SB	NB
Opposing Lanes	1	2	2	2
Conflicting Approach Left	SB	NB	EB	WB
Conflicting Lanes Left	2	2	2	1
Conflicting Approach Right	NB	SB	WB	EB
Conflicting Lanes Right	2	2	1	2
HCM Control Delay	62.1	298.8	28.4	78.4
HCM LOS	F	F	D	F

Lane	NBLn1	NBLn2	EBLn1	EBLn2	WBLn1	SBLn1	SBLn2
Vol Left, %	100%	0%	100%	0%	8%	100%	0%
Vol Thru, %	0%	91%	0%	95%	64%	0%	46%
Vol Right, %	0%	9%	0%	5%	28%	0%	54%
Sign Control	Stop	Stop	Stop	Stop	Stop	Stop	Stop
Traffic Vol by Lane	8	192	100	246	447	74	337
LT Vol	8	0	100	0	36	74	0
Through Vol	0	175	0	233	287	0	156
RT Vol	0	17	0	13	124	0	181
Lane Flow Rate	9	221	164	403	639	97	443
Geometry Grp	7	7	7	7	6	7	7
Degree of Util (X)	0.026	0.592	0.428	0.992	1.585	0.254	1.048
Departure Headway (Hd)	11.835	11.233	10.779	10.212	9.32	10.673	9.744
Convergence, Y/N	Yes	Yes	Yes	Yes	Yes	Yes	Yes
Cap	304	324	336	359	396	339	377
Service Time	9.535	8.933	8.479	7.912	7.32	8.373	7.444
HCM Lane V/C Ratio	0.03	0.682	0.488	1.123	1.614	0.286	1.175
HCM Control Delay	14.9	29	21.3	78.7	298.8	17	91.9
HCM Lane LOS	B	D	C	F	F	C	F
HCM 95th-tile Q	0.1	3.6	2.1	11.3	34.8	1	13.2



Movement	EBL	EBT	EBR	WBL	WBT	WBR	NBL	NBT	NBR	SBL	SBT	SBR
Lane Configurations												
Traffic Volume (veh/h)	65	193	59	4	275	138	72	247	1	78	167	101
Future Volume (veh/h)	65	193	59	4	275	138	72	247	1	78	167	101
Initial Q (Qb), veh	0	0	0	0	0	0	0	0	0	0	0	0
Ped-Bike Adj(A_pbT)	1.00		0.96	1.00		0.96	1.00		0.95	1.00		0.95
Parking Bus, Adj	1.00	1.00	1.00	1.00	1.00	1.00	1.00	1.00	1.00	1.00	1.00	1.00
Work Zone On Approach		No			No			No			No	
Adj Sat Flow, veh/h/ln	1870	1870	1870	1870	1870	1870	1870	1870	1870	1870	1870	1870
Adj Flow Rate, veh/h	96	284	87	6	410	206	104	358	1	85	182	110
Peak Hour Factor	0.68	0.68	0.68	0.67	0.67	0.67	0.69	0.69	0.69	0.92	0.92	0.92
Percent Heavy Veh, %	2	2	2	2	2	2	2	2	2	2	2	2
Cap, veh/h	130	352	99	43	506	252	132	503	1	123	283	171
Arrive On Green	0.43	0.43	0.43	0.43	0.43	0.43	0.07	0.27	0.27	0.07	0.26	0.26
Sat Flow, veh/h	187	811	228	5	1167	580	1781	1864	5	1781	1067	645
Grp Volume(v), veh/h	467	0	0	622	0	0	104	0	359	85	0	292
Grp Sat Flow(s),veh/h/ln	1226	0	0	1752	0	0	1781	0	1869	1781	0	1712
Q Serve(g_s), s	4.5	0.0	0.0	0.0	0.0	0.0	5.1	0.0	15.4	4.1	0.0	13.4
Cycle Q Clear(g_c), s	32.4	0.0	0.0	27.9	0.0	0.0	5.1	0.0	15.4	4.1	0.0	13.4
Prop In Lane	0.21		0.19	0.01		0.33	1.00		0.00	1.00		0.38
Lane Grp Cap(c), veh/h	581	0	0	801	0	0	132	0	504	123	0	454
V/C Ratio(X)	0.80	0.00	0.00	0.78	0.00	0.00	0.79	0.00	0.71	0.69	0.00	0.64
Avail Cap(c_a), veh/h	1145	0	0	1486	0	0	187	0	940	248	0	911
HCM Platoon Ratio	1.00	1.00	1.00	1.00	1.00	1.00	1.00	1.00	1.00	1.00	1.00	1.00
Upstream Filter(I)	1.00	0.00	0.00	1.00	0.00	0.00	1.00	0.00	1.00	1.00	0.00	1.00
Uniform Delay (d), s/veh	22.3	0.0	0.0	22.1	0.0	0.0	40.3	0.0	29.2	40.3	0.0	28.8
Incr Delay (d2), s/veh	2.7	0.0	0.0	1.7	0.0	0.0	8.5	0.0	8.3	2.5	0.0	6.9
Initial Q Delay(d3),s/veh	0.0	0.0	0.0	0.0	0.0	0.0	0.0	0.0	0.0	0.0	0.0	0.0
%ile BackOfQ(50%),veh/ln	9.1	0.0	0.0	11.1	0.0	0.0	2.5	0.0	7.7	1.8	0.0	6.0
Unsig. Movement Delay, s/veh												
LnGrp Delay(d),s/veh	24.9	0.0	0.0	23.7	0.0	0.0	48.8	0.0	37.5	42.8	0.0	35.7
LnGrp LOS	C	A	A	C	A	A	D	A	D	D	A	D
Approach Vol, veh/h		467			622			463			377	
Approach Delay, s/veh		24.9			23.7			40.1			37.3	
Approach LOS		C			C			D			D	

Timer - Assigned Phs	1	2		4	5	6		8
Phs Duration (G+Y+Rc), s	11.3	31.3		45.9	10.8	31.8		45.9
Change Period (Y+Rc), s	* 4.7	7.9		7.5	* 4.7	* 7.9		7.5
Max Green Setting (Gmax), s	* 9.3	47.1		73.5	* 12	* 45		73.5
Max Q Clear Time (g_c+I1), s	7.1	15.4		29.9	6.1	17.4		34.4
Green Ext Time (p_c), s	0.0	5.6		5.3	0.0	6.5		4.0

Intersection Summary	
HCM 6th Ctrl Delay	30.6
HCM 6th LOS	C

Notes

* HCM 6th computational engine requires equal clearance times for the phases crossing the barrier.

Intersection	
Int Delay, s/veh	32.4

Movement	EBL	EBT	EBR	WBL	WBT	WBR	NBL	NBT	NBR	SBL	SBT	SBR
Lane Configurations		⇕			⇕			⇕			⇕	
Traffic Vol, veh/h	14	184	71	60	259	36	118	62	99	33	38	35
Future Vol, veh/h	14	184	71	60	259	36	118	62	99	33	38	35
Conflicting Peds, #/hr	10	0	10	10	0	10	10	0	10	10	0	10
Sign Control	Free	Free	Free	Free	Free	Free	Stop	Stop	Stop	Stop	Stop	Stop
RT Channelized	-	-	None	-	-	None	-	-	None	-	-	None
Storage Length	-	-	-	-	-	-	-	-	-	-	-	-
Veh in Median Storage, #	-	0	-	-	0	-	-	0	-	-	0	-
Grade, %	-	0	-	-	0	-	-	0	-	-	0	-
Peak Hour Factor	75	75	92	92	77	77	92	92	92	57	92	57
Heavy Vehicles, %	2	2	2	2	2	2	2	2	2	2	2	2
Mvmt Flow	19	245	77	65	336	47	128	67	108	58	41	61

Major/Minor	Major1			Major2			Minor1			Minor2		
Conflicting Flow All	393	0	0	332	0	0	883	855	304	919	870	380
Stage 1	-	-	-	-	-	-	332	332	-	500	500	-
Stage 2	-	-	-	-	-	-	551	523	-	419	370	-
Critical Hdwy	4.12	-	-	4.12	-	-	7.12	6.52	6.22	7.12	6.52	6.22
Critical Hdwy Stg 1	-	-	-	-	-	-	6.12	5.52	-	6.12	5.52	-
Critical Hdwy Stg 2	-	-	-	-	-	-	6.12	5.52	-	6.12	5.52	-
Follow-up Hdwy	2.218	-	-	2.218	-	-	3.518	4.018	3.318	3.518	4.018	3.318
Pot Cap-1 Maneuver	1166	-	-	1227	-	-	266	296	736	252	290	667
Stage 1	-	-	-	-	-	-	681	644	-	553	543	-
Stage 2	-	-	-	-	-	-	519	530	-	612	620	-
Platoon blocked, %		-	-		-	-						
Mov Cap-1 Maneuver	1155	-	-	1215	-	-	194	265	722	158	260	654
Mov Cap-2 Maneuver	-	-	-	-	-	-	194	265	-	158	260	-
Stage 1	-	-	-	-	-	-	661	625	-	537	501	-
Stage 2	-	-	-	-	-	-	398	489	-	451	601	-

Approach	EB	WB	NB	SB
HCM Control Delay, s	0.4	1.2	111.1	39.2
HCM LOS			F	E

Minor Lane/Major Mvmt	NBLn1	EBL	EBT	EBR	WBL	WBT	WBR	SBLn1
Capacity (veh/h)	285	1155	-	-	1215	-	-	259
HCM Lane V/C Ratio	1.064	0.016	-	-	0.054	-	-	0.62
HCM Control Delay (s)	111.1	8.2	0	-	8.1	0	-	39.2
HCM Lane LOS	F	A	A	-	A	A	-	E
HCM 95th %tile Q(veh)	11.9	0	-	-	0.2	-	-	3.8

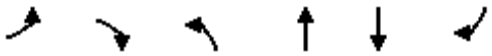

Movement	EBL	EBR	NBL	NBT	SBT	SBR
Lane Configurations						
Traffic Volume (veh/h)	157	162	242	552	231	110
Future Volume (veh/h)	157	162	242	552	231	110
Initial Q (Qb), veh	0	0	0	0	0	0
Ped-Bike Adj(A_pbT)	1.00	1.00	1.00			0.95
Parking Bus, Adj	1.00	1.00	1.00	1.00	1.00	1.00
Work Zone On Approach	No			No	No	
Adj Sat Flow, veh/h/ln	1870	1870	1870	1870	1870	1870
Adj Flow Rate, veh/h	191	198	295	673	285	136
Peak Hour Factor	0.82	0.82	0.82	0.82	0.81	0.81
Percent Heavy Veh, %	2	2	2	2	2	2
Cap, veh/h	289	593	377	1144	374	178
Arrive On Green	0.16	0.16	0.21	0.61	0.32	0.32
Sat Flow, veh/h	1781	1585	1781	1870	1176	561
Grp Volume(v), veh/h	191	198	295	673	0	421
Grp Sat Flow(s),veh/h/ln	1781	1585	1781	1870	0	1737
Q Serve(g_s), s	4.9	4.3	7.6	10.6	0.0	10.6
Cycle Q Clear(g_c), s	4.9	4.3	7.6	10.6	0.0	10.6
Prop In Lane	1.00	1.00	1.00			0.32
Lane Grp Cap(c), veh/h	289	593	377	1144	0	552
V/C Ratio(X)	0.66	0.33	0.78	0.59	0.00	0.76
Avail Cap(c_a), veh/h	733	987	2051	4577	0	2107
HCM Platoon Ratio	1.00	1.00	1.00	1.00	1.00	1.00
Upstream Filter(I)	1.00	1.00	1.00	1.00	0.00	1.00
Uniform Delay (d), s/veh	19.1	10.9	18.1	5.7	0.0	14.9
Incr Delay (d2), s/veh	2.6	0.3	3.6	0.5	0.0	2.2
Initial Q Delay(d3),s/veh	0.0	0.0	0.0	0.0	0.0	0.0
%ile BackOfQ(50%),veh/ln	2.0	0.1	3.0	2.1	0.0	3.6
Unsig. Movement Delay, s/veh						
LnGrp Delay(d),s/veh	21.7	11.2	21.7	6.2	0.0	17.2
LnGrp LOS	C	B	C	A	A	B
Approach Vol, veh/h	389			968	421	
Approach Delay, s/veh	16.4			10.9	17.2	
Approach LOS	B			B	B	

Timer - Assigned Phs		2		4	5	6
Phs Duration (G+Y+Rc), s		35.7		12.9	14.3	21.4
Change Period (Y+Rc), s		6.0		5.0	4.0	6.0
Max Green Setting (Gmax), s		119.0		20.0	56.0	59.0
Max Q Clear Time (g_c+I1), s		12.6		6.9	9.6	12.6
Green Ext Time (p_c), s		5.1		1.0	0.9	2.8

Intersection Summary		
HCM 6th Ctrl Delay		13.6
HCM 6th LOS		B



Movement	WBL	WBR	NBT	NBR	SBL	SBT
Lane Configurations						
Traffic Volume (veh/h)	83	32	593	115	7	258
Future Volume (veh/h)	83	32	593	115	7	258
Initial Q (Qb), veh	0	0	0	0	0	0
Ped-Bike Adj(A_pbT)	1.00	1.00		0.97	1.00	
Parking Bus, Adj	1.00	1.00	1.00	1.00	1.00	1.00
Work Zone On Approach	No		No			No
Adj Sat Flow, veh/h/ln	1870	1870	1870	1870	1870	1870
Adj Flow Rate, veh/h	124	48	732	142	9	315
Peak Hour Factor	0.67	0.67	0.81	0.81	0.82	0.82
Percent Heavy Veh, %	2	2	2	2	2	2
Cap, veh/h	183	181	889	173	21	1271
Arrive On Green	0.10	0.10	0.59	0.59	0.01	0.68
Sat Flow, veh/h	1781	1585	1512	293	1781	1870
Grp Volume(v), veh/h	124	48	0	874	9	315
Grp Sat Flow(s),veh/h/ln	1781	1585	0	1805	1781	1870
Q Serve(g_s), s	3.4	1.4	0.0	19.5	0.3	3.3
Cycle Q Clear(g_c), s	3.4	1.4	0.0	19.5	0.3	3.3
Prop In Lane	1.00	1.00		0.16	1.00	
Lane Grp Cap(c), veh/h	183	181	0	1062	21	1271
V/C Ratio(X)	0.68	0.26	0.00	0.82	0.43	0.25
Avail Cap(c_a), veh/h	529	490	0	3934	353	4595
HCM Platoon Ratio	1.00	1.00	1.00	1.00	1.00	1.00
Upstream Filter(I)	1.00	1.00	0.00	1.00	1.00	1.00
Uniform Delay (d), s/veh	21.8	20.4	0.0	8.3	24.8	3.1
Incr Delay (d2), s/veh	4.3	0.8	0.0	1.7	13.3	0.1
Initial Q Delay(d3),s/veh	0.0	0.0	0.0	0.0	0.0	0.0
%ile BackOfQ(50%),veh/ln	1.5	0.5	0.0	4.6	0.2	0.5
Unsig. Movement Delay, s/veh						
LnGrp Delay(d),s/veh	26.2	21.2	0.0	10.0	38.1	3.2
LnGrp LOS	C	C	A	A	D	A
Approach Vol, veh/h	172		874			324
Approach Delay, s/veh	24.8		10.0			4.2
Approach LOS	C		A			A

Timer - Assigned Phs	1	2				6	8
Phs Duration (G+Y+Rc), s	4.6	35.7				40.3	10.2
Change Period (Y+Rc), s	4.0	6.0				6.0	5.0
Max Green Setting (Gmax), s	10.6	110.0				124.0	15.0
Max Q Clear Time (g_c+I1), s	2.3	21.5				5.3	5.4
Green Ext Time (p_c), s	0.0	8.2				1.9	0.3

Intersection Summary	
HCM 6th Ctrl Delay	10.5
HCM 6th LOS	B



Movement	EBL	EBT	EBR	WBL	WBT	WBR	NBL	NBT	NBR	SBL	SBT	SBR
Lane Configurations												
Traffic Volume (veh/h)	13	94	14	22	94	122	12	22	41	15	4	11
Future Volume (veh/h)	13	94	14	22	94	122	12	22	41	15	4	11
Initial Q (Qb), veh	0	0	0	0	0	0	0	0	0	0	0	0
Ped-Bike Adj(A_pbT)	1.00		0.93	1.00		0.92	0.99		0.98	1.00		0.96
Parking Bus, Adj	1.00	1.00	1.00	1.00	1.00	1.00	1.00	1.00	1.00	1.00	1.00	1.00
Work Zone On Approach		No			No			No			No	
Adj Sat Flow, veh/h/ln	1870	1870	1870	1870	1870	1870	1870	1870	1870	1870	1870	1870
Adj Flow Rate, veh/h	24	174	26	27	116	151	16	30	56	22	6	16
Peak Hour Factor	0.54	0.54	0.54	0.81	0.81	0.81	0.73	0.73	0.73	0.69	0.69	0.69
Percent Heavy Veh, %	2	2	2	2	2	2	2	2	2	2	2	2
Cap, veh/h	31	224	33	50	213	207	143	270	448	751	221	590
Arrive On Green	0.16	0.16	0.16	0.14	0.14	0.14	0.50	0.50	0.50	0.50	0.50	0.50
Sat Flow, veh/h	193	1401	209	350	1503	1459	194	535	888	1305	438	1169
Grp Volume(v), veh/h	224	0	0	143	0	151	102	0	0	22	0	22
Grp Sat Flow(s),veh/h/ln	1804	0	0	1853	0	1459	1617	0	0	1305	0	1607
Q Serve(g_s), s	11.1	0.0	0.0	6.7	0.0	9.2	0.0	0.0	0.0	0.0	0.0	0.6
Cycle Q Clear(g_c), s	11.1	0.0	0.0	6.7	0.0	9.2	3.0	0.0	0.0	0.6	0.0	0.6
Prop In Lane	0.11		0.12	0.19		1.00	0.16		0.55	1.00		0.73
Lane Grp Cap(c), veh/h	288	0	0	263	0	207	861	0	0	751	0	811
V/C Ratio(X)	0.78	0.00	0.00	0.54	0.00	0.73	0.12	0.00	0.00	0.03	0.00	0.03
Avail Cap(c_a), veh/h	698	0	0	975	0	768	861	0	0	751	0	811
HCM Platoon Ratio	1.00	1.00	1.00	1.00	1.00	1.00	1.00	1.00	1.00	1.00	1.00	1.00
Upstream Filter(I)	1.00	0.00	0.00	1.00	0.00	1.00	1.00	0.00	0.00	1.00	0.00	1.00
Uniform Delay (d), s/veh	37.5	0.0	0.0	37.1	0.0	38.2	12.1	0.0	0.0	11.5	0.0	11.6
Incr Delay (d2), s/veh	1.7	0.0	0.0	0.7	0.0	1.9	0.3	0.0	0.0	0.1	0.0	0.1
Initial Q Delay(d3),s/veh	0.0	0.0	0.0	0.0	0.0	0.0	0.0	0.0	0.0	0.0	0.0	0.0
%ile BackOfQ(50%),veh/ln	5.0	0.0	0.0	3.0	0.0	3.3	1.1	0.0	0.0	0.2	0.0	0.2
Unsig. Movement Delay, s/veh												
LnGrp Delay(d),s/veh	39.2	0.0	0.0	37.8	0.0	40.1	12.4	0.0	0.0	11.6	0.0	11.6
LnGrp LOS	D	A	A	D	A	D	B	A	A	B	A	B
Approach Vol, veh/h		224			294			102			44	
Approach Delay, s/veh		39.2			39.0			12.4			11.6	
Approach LOS		D			D			B			B	

Timer - Assigned Phs	2	4	6	8
Phs Duration (G+Y+Rc), s	53.0	20.9	53.0	19.2
Change Period (Y+Rc), s	6.0	6.0	6.0	6.0
Max Green Setting (Gmax), s	47.0	36.0	47.0	49.0
Max Q Clear Time (g_c+I1), s	5.0	13.1	2.6	11.2
Green Ext Time (p_c), s	0.2	0.8	0.4	0.8

Intersection Summary	
HCM 6th Ctrl Delay	33.2
HCM 6th LOS	C



Movement	EBL	EBT	EBR	WBL	WBT	WBR	NBL	NBT	NBR	SBL	SBT	SBR
Lane Configurations												
Traffic Volume (veh/h)	83	28	43	1	52	28	135	1227	20	21	990	54
Future Volume (veh/h)	83	28	43	1	52	28	135	1227	20	21	990	54
Initial Q (Qb), veh	0	0	0	0	0	0	0	0	0	0	0	0
Ped-Bike Adj(A_pbT)	1.00		0.95	1.00		0.96	1.00		0.96	1.00		0.98
Parking Bus, Adj	1.00	1.00	1.00	1.00	1.00	1.00	1.00	1.00	1.00	1.00	1.00	1.00
Work Zone On Approach		No			No			No			No	
Adj Sat Flow, veh/h/ln	1870	1870	1870	1870	1870	1870	1870	1870	1870	1870	1870	1870
Adj Flow Rate, veh/h	106	36	55	1	67	36	169	1534	25	28	1303	71
Peak Hour Factor	0.78	0.78	0.78	0.78	0.78	0.78	0.80	0.80	0.80	0.76	0.76	0.76
Percent Heavy Veh, %	2	2	2	2	2	2	2	2	2	2	2	2
Cap, veh/h	142	458	872	5	314	255	282	1714	28	89	1592	820
Arrive On Green	0.08	0.24	0.24	0.00	0.17	0.17	0.08	0.48	0.48	0.05	0.45	0.45
Sat Flow, veh/h	1781	1870	2637	1781	1870	1518	3456	3576	58	1781	3554	1548
Grp Volume(v), veh/h	106	36	55	1	67	36	169	761	798	28	1303	71
Grp Sat Flow(s),veh/h/ln	1781	1870	1318	1781	1870	1518	1728	1777	1857	1781	1777	1548
Q Serve(g_s), s	7.1	1.8	1.8	0.1	3.8	2.5	5.8	47.8	48.0	1.9	39.1	2.8
Cycle Q Clear(g_c), s	7.1	1.8	1.8	0.1	3.8	2.5	5.8	47.8	48.0	1.9	39.1	2.8
Prop In Lane	1.00		1.00	1.00		1.00	1.00		0.03	1.00		1.00
Lane Grp Cap(c), veh/h	142	458	872	5	314	255	282	852	890	89	1592	820
V/C Ratio(X)	0.75	0.08	0.06	0.21	0.21	0.14	0.60	0.89	0.90	0.31	0.82	0.09
Avail Cap(c_a), veh/h	146	703	1219	146	703	571	282	852	890	146	1647	843
HCM Platoon Ratio	1.00	1.00	1.00	1.00	1.00	1.00	1.00	1.00	1.00	1.00	1.00	1.00
Upstream Filter(I)	1.00	1.00	1.00	1.00	1.00	1.00	1.00	1.00	1.00	1.00	1.00	1.00
Uniform Delay (d), s/veh	55.1	35.6	28.4	60.9	43.9	43.4	54.3	29.0	29.1	56.1	29.4	14.3
Incr Delay (d2), s/veh	16.5	0.2	0.1	7.5	0.7	0.5	2.5	13.8	13.5	0.7	4.8	0.2
Initial Q Delay(d3),s/veh	0.0	0.0	0.0	0.0	0.0	0.0	0.0	0.0	0.0	0.0	0.0	0.0
%ile BackOfQ(50%),veh/ln	3.8	0.8	0.6	0.0	1.8	1.0	2.5	21.5	22.5	0.8	16.2	1.0
Unsig. Movement Delay, s/veh												
LnGrp Delay(d),s/veh	71.6	35.7	28.4	68.4	44.7	43.9	56.7	42.8	42.6	56.8	34.2	14.5
LnGrp LOS	E	D	C	E	D	D	E	D	D	E	C	B
Approach Vol, veh/h		197			104			1728			1402	
Approach Delay, s/veh		53.0			44.6			44.1			33.7	
Approach LOS		D			D			D			C	

Timer - Assigned Phs	1	2	3	4	5	6	7	8
Phs Duration (G+Y+Rc), s	11.8	67.1	6.0	37.4	15.7	63.2	15.4	28.0
Change Period (Y+Rc), s	* 5.7	* 8.4	* 5.7	7.5	* 5.7	* 8.4	* 5.7	7.5
Max Green Setting (Gmax), s	* 10	* 57	* 10	46.0	* 10	* 57	* 10	46.0
Max Q Clear Time (g_c+I1), s	13.9	50.0	2.1	3.8	7.8	41.1	9.1	5.8
Green Ext Time (p_c), s	0.0	6.4	0.0	0.8	0.1	13.7	0.0	1.0

Intersection Summary	
HCM 6th Ctrl Delay	40.4
HCM 6th LOS	D

Notes

* HCM 6th computational engine requires equal clearance times for the phases crossing the barrier.

Intersection	
Int Delay, s/veh	2.4

Movement	WBL	WBR	NBT	NBR	SBL	SBT
Lane Configurations						
Traffic Vol, veh/h	25	68	254	15	41	189
Future Vol, veh/h	25	68	254	15	41	189
Conflicting Peds, #/hr	10	10	0	10	10	0
Sign Control	Stop	Stop	Free	Free	Free	Free
RT Channelized	-	None	-	None	-	None
Storage Length	0	-	-	-	-	-
Veh in Median Storage, #	0	-	0	-	-	0
Grade, %	0	-	0	-	-	0
Peak Hour Factor	92	92	92	92	92	92
Heavy Vehicles, %	2	2	2	2	2	2
Mvmt Flow	27	74	276	16	45	205

Major/Minor	Minor1		Major1		Major2	
Conflicting Flow All	599	304	0	0	302	0
Stage 1	294	-	-	-	-	-
Stage 2	305	-	-	-	-	-
Critical Hdwy	6.42	6.22	-	-	4.12	-
Critical Hdwy Stg 1	5.42	-	-	-	-	-
Critical Hdwy Stg 2	5.42	-	-	-	-	-
Follow-up Hdwy	3.518	3.318	-	-	2.218	-
Pot Cap-1 Maneuver	465	736	-	-	1259	-
Stage 1	756	-	-	-	-	-
Stage 2	748	-	-	-	-	-
Platoon blocked, %			-	-		-
Mov Cap-1 Maneuver	437	722	-	-	1247	-
Mov Cap-2 Maneuver	437	-	-	-	-	-
Stage 1	748	-	-	-	-	-
Stage 2	711	-	-	-	-	-

Approach	WB	NB	SB
HCM Control Delay, s	12	0	1.4
HCM LOS	B		

Minor Lane/Major Mvmt	NBT	NBR	WBLn1	SBL	SBT
Capacity (veh/h)	-	-	614	1247	-
HCM Lane V/C Ratio	-	-	0.165	0.036	-
HCM Control Delay (s)	-	-	12	8	0
HCM Lane LOS	-	-	B	A	A
HCM 95th %tile Q(veh)	-	-	0.6	0.1	-

Intersection	
Int Delay, s/veh	2.7

Movement	WBL	WBR	NBT	NBR	SBL	SBT
Lane Configurations						
Traffic Vol, veh/h	37	62	207	23	38	176
Future Vol, veh/h	37	62	207	23	38	176
Conflicting Peds, #/hr	10	10	0	10	10	0
Sign Control	Stop	Stop	Free	Free	Free	Free
RT Channelized	-	None	-	None	-	None
Storage Length	0	-	-	-	-	-
Veh in Median Storage, #	0	-	0	-	-	0
Grade, %	0	-	0	-	-	0
Peak Hour Factor	92	92	92	92	92	92
Heavy Vehicles, %	2	2	2	2	2	2
Mvmt Flow	40	67	225	25	41	191

Major/Minor	Minor1		Major1		Major2	
Conflicting Flow All	531	258	0	0	260	0
Stage 1	248	-	-	-	-	-
Stage 2	283	-	-	-	-	-
Critical Hdwy	6.42	6.22	-	-	4.12	-
Critical Hdwy Stg 1	5.42	-	-	-	-	-
Critical Hdwy Stg 2	5.42	-	-	-	-	-
Follow-up Hdwy	3.518	3.318	-	-	2.218	-
Pot Cap-1 Maneuver	509	781	-	-	1304	-
Stage 1	793	-	-	-	-	-
Stage 2	765	-	-	-	-	-
Platoon blocked, %			-	-		-
Mov Cap-1 Maneuver	481	766	-	-	1292	-
Mov Cap-2 Maneuver	481	-	-	-	-	-
Stage 1	785	-	-	-	-	-
Stage 2	731	-	-	-	-	-

Approach	WB	NB	SB
HCM Control Delay, s	11.9	0	1.4
HCM LOS	B		

Minor Lane/Major Mvmt	NBT	NBR	WBLn1	SBL	SBT
Capacity (veh/h)	-	-	627	1292	-
HCM Lane V/C Ratio	-	-	0.172	0.032	-
HCM Control Delay (s)	-	-	11.9	7.9	0
HCM Lane LOS	-	-	B	A	A
HCM 95th %tile Q(veh)	-	-	0.6	0.1	-

Intersection	
Int Delay, s/veh	9.9

Movement	EBL	EBR	NBL	NBT	SBT	SBR
Lane Configurations						
Traffic Vol, veh/h	96	108	53	757	350	42
Future Vol, veh/h	96	108	53	757	350	42
Conflicting Peds, #/hr	10	10	10	0	0	10
Sign Control	Stop	Stop	Free	Free	Free	Free
RT Channelized	-	None	-	None	-	None
Storage Length	0	-	410	-	-	80
Veh in Median Storage, #	0	-	-	0	0	-
Grade, %	0	-	-	0	0	-
Peak Hour Factor	92	92	92	92	92	92
Heavy Vehicles, %	2	2	2	2	2	2
Mvmt Flow	104	117	58	823	380	46

Major/Minor	Minor2		Major1		Major2	
Conflicting Flow All	1339	400	436	0	-	0
Stage 1	390	-	-	-	-	-
Stage 2	949	-	-	-	-	-
Critical Hdwy	6.42	6.22	4.12	-	-	-
Critical Hdwy Stg 1	5.42	-	-	-	-	-
Critical Hdwy Stg 2	5.42	-	-	-	-	-
Follow-up Hdwy	3.518	3.318	2.218	-	-	-
Pot Cap-1 Maneuver	168	650	1124	-	-	-
Stage 1	684	-	-	-	-	-
Stage 2	376	-	-	-	-	-
Platoon blocked, %				-	-	-
Mov Cap-1 Maneuver	156	638	1113	-	-	-
Mov Cap-2 Maneuver	156	-	-	-	-	-
Stage 1	642	-	-	-	-	-
Stage 2	372	-	-	-	-	-

Approach	EB	NB	SB
HCM Control Delay, s	65.8	0.6	0
HCM LOS	F		

Minor Lane/Major Mvmt	NBL	NBT	EBLn1	SBT	SBR
Capacity (veh/h)	1113	-	260	-	-
HCM Lane V/C Ratio	0.052	-	0.853	-	-
HCM Control Delay (s)	8.4	-	65.8	-	-
HCM Lane LOS	A	-	F	-	-
HCM 95th %tile Q(veh)	0.2	-	7	-	-

Intersection	
Int Delay, s/veh	5.5

Movement	EBL	EBT	WBT	WBR	SBL	SBR
Lane Configurations						
Traffic Vol, veh/h	0	0	0	15	25	0
Future Vol, veh/h	0	0	0	15	25	0
Conflicting Peds, #/hr	10	0	0	10	10	10
Sign Control	Free	Free	Free	Free	Stop	Stop
RT Channelized	-	None	-	None	-	None
Storage Length	-	-	-	-	0	-
Veh in Median Storage, #	-	0	0	-	0	-
Grade, %	-	0	0	-	0	-
Peak Hour Factor	92	92	92	92	92	92
Heavy Vehicles, %	2	2	2	2	2	2
Mvmt Flow	0	0	0	16	27	0

Major/Minor	Major1		Major2		Minor2	
Conflicting Flow All	26	0	-	0	28	28
Stage 1	-	-	-	-	18	-
Stage 2	-	-	-	-	10	-
Critical Hdwy	4.12	-	-	-	6.42	6.22
Critical Hdwy Stg 1	-	-	-	-	5.42	-
Critical Hdwy Stg 2	-	-	-	-	5.42	-
Follow-up Hdwy	2.218	-	-	-	3.518	3.318
Pot Cap-1 Maneuver	1588	-	-	-	987	1047
Stage 1	-	-	-	-	1005	-
Stage 2	-	-	-	-	1013	-
Platoon blocked, %		-	-	-		
Mov Cap-1 Maneuver	1573	-	-	-	967	1027
Mov Cap-2 Maneuver	-	-	-	-	967	-
Stage 1	-	-	-	-	995	-
Stage 2	-	-	-	-	1003	-

Approach	EB	WB	SB
HCM Control Delay, s	0	0	8.8
HCM LOS			A

Minor Lane/Major Mvmt	EBL	EBT	WBT	WBR	SBLn1
Capacity (veh/h)	1573	-	-	-	967
HCM Lane V/C Ratio	-	-	-	-	0.028
HCM Control Delay (s)	0	-	-	-	8.8
HCM Lane LOS	A	-	-	-	A
HCM 95th %tile Q(veh)	0	-	-	-	0.1

Intersection	
Int Delay, s/veh	3.1

Movement	EBL	EBT	WBT	WBR	SBL	SBR
Lane Configurations						
Traffic Vol, veh/h	0	25	15	19	31	0
Future Vol, veh/h	0	25	15	19	31	0
Conflicting Peds, #/hr	10	0	0	10	10	10
Sign Control	Free	Free	Free	Free	Stop	Stop
RT Channelized	-	None	-	None	-	None
Storage Length	-	-	-	-	0	-
Veh in Median Storage, #	-	0	0	-	0	-
Grade, %	-	0	0	-	0	-
Peak Hour Factor	92	92	92	92	92	92
Heavy Vehicles, %	2	2	2	2	2	2
Mvmt Flow	0	27	16	21	34	0

Major/Minor	Major1		Major2		Minor2	
Conflicting Flow All	47	0	-	0	74	47
Stage 1	-	-	-	-	37	-
Stage 2	-	-	-	-	37	-
Critical Hdwy	4.12	-	-	-	6.42	6.22
Critical Hdwy Stg 1	-	-	-	-	5.42	-
Critical Hdwy Stg 2	-	-	-	-	5.42	-
Follow-up Hdwy	2.218	-	-	-	3.518	3.318
Pot Cap-1 Maneuver	1560	-	-	-	930	1022
Stage 1	-	-	-	-	985	-
Stage 2	-	-	-	-	985	-
Platoon blocked, %		-	-	-		
Mov Cap-1 Maneuver	1545	-	-	-	911	1003
Mov Cap-2 Maneuver	-	-	-	-	911	-
Stage 1	-	-	-	-	975	-
Stage 2	-	-	-	-	975	-

Approach	EB	WB	SB
HCM Control Delay, s	0	0	9.1
HCM LOS			A

Minor Lane/Major Mvmt	EBL	EBT	WBT	WBR	SBLn1
Capacity (veh/h)	1545	-	-	-	911
HCM Lane V/C Ratio	-	-	-	-	0.037
HCM Control Delay (s)	0	-	-	-	9.1
HCM Lane LOS	A	-	-	-	A
HCM 95th %tile Q(veh)	0	-	-	-	0.1

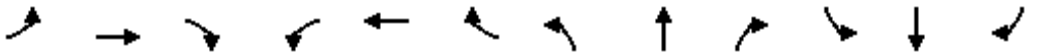

Movement	EBL	EBT	EBR	WBL	WBT	WBR	NBL	NBT	NBR	SBL	SBT	SBR
Lane Configurations												
Traffic Volume (veh/h)	135	114	130	208	83	269	55	338	36	159	201	48
Future Volume (veh/h)	135	114	130	208	83	269	55	338	36	159	201	48
Initial Q (Qb), veh	0	0	0	0	0	0	0	0	0	0	0	0
Ped-Bike Adj(A_pbT)	1.00		0.96	1.00		0.95	1.00		0.97	1.00		0.97
Parking Bus, Adj	1.00	1.00	1.00	1.00	1.00	1.00	1.00	1.00	1.00	1.00	1.00	1.00
Work Zone On Approach		No			No			No			No	
Adj Sat Flow, veh/h/ln	1870	1870	1870	1870	1870	1870	1870	1870	1870	1870	1870	1870
Adj Flow Rate, veh/h	185	156	178	270	108	297	65	398	42	189	239	57
Peak Hour Factor	0.73	0.73	0.73	0.77	0.77	0.77	0.85	0.85	0.85	0.84	0.84	0.84
Percent Heavy Veh, %	2	2	2	2	2	2	2	2	2	2	2	2
Cap, veh/h	222	390	318	310	482	386	194	472	50	226	859	200
Arrive On Green	0.12	0.21	0.21	0.17	0.26	0.26	0.11	0.28	0.28	0.13	0.30	0.30
Sat Flow, veh/h	1781	1870	1527	1781	1870	1501	1781	1658	175	1781	2842	662
Grp Volume(v), veh/h	185	156	178	270	108	297	65	0	440	189	147	149
Grp Sat Flow(s),veh/h/ln	1781	1870	1527	1781	1870	1501	1781	0	1832	1781	1777	1728
Q Serve(g_s), s	8.8	6.3	9.1	12.9	4.0	16.0	2.9	0.0	19.7	9.0	5.5	5.7
Cycle Q Clear(g_c), s	8.8	6.3	9.1	12.9	4.0	16.0	2.9	0.0	19.7	9.0	5.5	5.7
Prop In Lane	1.00		1.00	1.00		1.00	1.00		0.10	1.00		0.38
Lane Grp Cap(c), veh/h	222	390	318	310	482	386	194	0	521	226	537	522
V/C Ratio(X)	0.83	0.40	0.56	0.87	0.22	0.77	0.33	0.00	0.84	0.84	0.27	0.28
Avail Cap(c_a), veh/h	368	493	403	531	665	534	245	0	757	347	836	813
HCM Platoon Ratio	1.00	1.00	1.00	1.00	1.00	1.00	1.00	1.00	1.00	1.00	1.00	1.00
Upstream Filter(I)	1.00	1.00	1.00	1.00	1.00	1.00	1.00	0.00	1.00	1.00	1.00	1.00
Uniform Delay (d), s/veh	37.3	29.8	30.9	35.1	25.5	30.0	35.9	0.0	29.4	37.2	23.1	23.2
Incr Delay (d2), s/veh	3.3	0.9	2.2	3.6	0.3	5.7	0.4	0.0	7.1	6.1	0.4	0.4
Initial Q Delay(d3),s/veh	0.0	0.0	0.0	0.0	0.0	0.0	0.0	0.0	0.0	0.0	0.0	0.0
%ile BackOfQ(50%),veh/ln	4.0	2.9	3.5	5.8	1.8	6.2	1.2	0.0	9.1	4.2	2.3	2.3
Unsig. Movement Delay, s/veh												
LnGrp Delay(d),s/veh	40.6	30.7	33.1	38.6	25.8	35.6	36.3	0.0	36.5	43.3	23.5	23.6
LnGrp LOS	D	C	C	D	C	D	D	A	D	D	C	C
Approach Vol, veh/h		519			675			505			485	
Approach Delay, s/veh		35.1			35.3			36.5			31.3	
Approach LOS		D			D			D			C	

Timer - Assigned Phs	1	2	3	4	5	6	7	8
Phs Duration (G+Y+Rc), s	15.0	30.8	19.2	22.2	13.5	32.3	14.9	26.4
Change Period (Y+Rc), s	4.0	6.0	4.0	4.0	4.0	6.0	4.0	4.0
Max Green Setting (Gmax), s	17.0	36.0	26.0	23.0	12.0	41.0	18.0	31.0
Max Q Clear Time (g_c+I1), s	11.0	21.7	14.9	11.1	4.9	7.7	10.8	18.0
Green Ext Time (p_c), s	0.1	3.0	0.3	1.7	0.0	2.6	0.1	2.1

Intersection Summary	
HCM 6th Ctrl Delay	34.6
HCM 6th LOS	C

Intersection	
Intersection Delay, s/veh	103.4
Intersection LOS	F

Movement	EBL	EBT	EBR	WBL	WBT	WBR	NBL	NBT	NBR	SBL	SBT	SBR
Lane Configurations												
Traffic Vol, veh/h	11	153	143	31	220	161	162	167	14	248	176	66
Future Vol, veh/h	11	153	143	31	220	161	162	167	14	248	176	66
Peak Hour Factor	0.77	0.77	0.77	0.83	0.83	0.83	0.85	0.85	0.85	0.83	0.83	0.83
Heavy Vehicles, %	2	2	2	2	2	2	2	2	2	2	2	2
Mvmt Flow	14	199	186	37	265	194	191	196	16	299	212	80
Number of Lanes	0	1	1	0	1	1	0	1	0	0	1	0

Approach	EB	WB	NB	SB
Opposing Approach	WB	EB	SB	NB
Opposing Lanes	2	2	1	1
Conflicting Approach Left	SB	NB	EB	WB
Conflicting Lanes Left	1	1	2	2
Conflicting Approach Right	NB	SB	WB	EB
Conflicting Lanes Right	1	1	2	2
HCM Control Delay	23.2	32.4	73.2	237.9
HCM LOS	C	D	F	F

Lane	NBLn1	EBLn1	EBLn2	WBLn1	WBLn2	SBLn1
Vol Left, %	47%	7%	0%	12%	0%	51%
Vol Thru, %	49%	93%	0%	88%	0%	36%
Vol Right, %	4%	0%	100%	0%	100%	13%
Sign Control	Stop	Stop	Stop	Stop	Stop	Stop
Traffic Vol by Lane	343	164	143	251	161	490
LT Vol	162	11	0	31	0	248
Through Vol	167	153	0	220	0	176
RT Vol	14	0	143	0	161	66
Lane Flow Rate	404	213	186	302	194	590
Geometry Grp	2	7	7	7	7	2
Degree of Util (X)	0.974	0.556	0.447	0.77	0.453	1.446
Departure Headway (Hd)	9.91	10.606	9.828	10.337	9.53	8.816
Convergence, Y/N	Yes	Yes	Yes	Yes	Yes	Yes
Cap	371	343	370	354	380	419
Service Time	7.91	8.306	7.528	8.037	7.23	6.816
HCM Lane V/C Ratio	1.089	0.621	0.503	0.853	0.511	1.408
HCM Control Delay	73.2	25.8	20.2	40.4	19.9	237.9
HCM Lane LOS	F	D	C	E	C	F
HCM 95th-tile Q	10.9	3.2	2.2	6.2	2.3	30.1

Intersection	
Int Delay, s/veh	5.5

Movement	EBL	EBT	EBR	WBL	WBT	WBR	NBL	NBT	NBR	SBL	SBT	SBR
Lane Configurations		↕			↕			↕			↕	
Traffic Vol, veh/h	2	282	18	4	265	16	28	6	7	28	8	2
Future Vol, veh/h	2	282	18	4	265	16	28	6	7	28	8	2
Conflicting Peds, #/hr	10	0	10	10	0	10	10	0	10	10	0	10
Sign Control	Free	Free	Free	Free	Free	Free	Stop	Stop	Stop	Stop	Stop	Stop
RT Channelized	-	-	None	-	-	None	-	-	None	-	-	None
Storage Length	-	-	-	-	-	-	-	-	-	-	-	-
Veh in Median Storage, #	-	0	-	-	0	-	-	0	-	-	0	-
Grade, %	-	0	-	-	0	-	-	0	-	-	0	-
Peak Hour Factor	88	88	88	80	80	80	58	58	58	25	25	25
Heavy Vehicles, %	2	2	2	2	2	2	2	2	2	2	2	2
Mvmt Flow	2	320	20	5	331	20	48	10	12	112	32	8

Major/Minor	Major1			Major2			Minor1			Minor2		
Conflicting Flow All	361	0	0	350	0	0	725	715	350	716	715	361
Stage 1	-	-	-	-	-	-	344	344	-	361	361	-
Stage 2	-	-	-	-	-	-	381	371	-	355	354	-
Critical Hdwy	4.12	-	-	4.12	-	-	7.12	6.52	6.22	7.12	6.52	6.22
Critical Hdwy Stg 1	-	-	-	-	-	-	6.12	5.52	-	6.12	5.52	-
Critical Hdwy Stg 2	-	-	-	-	-	-	6.12	5.52	-	6.12	5.52	-
Follow-up Hdwy	2.218	-	-	2.218	-	-	3.518	4.018	3.318	3.518	4.018	3.318
Pot Cap-1 Maneuver	1198	-	-	1209	-	-	340	356	693	345	356	684
Stage 1	-	-	-	-	-	-	671	637	-	657	626	-
Stage 2	-	-	-	-	-	-	641	620	-	662	630	-
Platoon blocked, %		-	-		-	-						
Mov Cap-1 Maneuver	1187	-	-	1197	-	-	305	346	680	323	346	671
Mov Cap-2 Maneuver	-	-	-	-	-	-	305	346	-	323	346	-
Stage 1	-	-	-	-	-	-	663	629	-	649	617	-
Stage 2	-	-	-	-	-	-	592	611	-	632	622	-

Approach	EB	WB	NB	SB
HCM Control Delay, s	0.1	0.1	18.2	24.2
HCM LOS			C	C

Minor Lane/Major Mvmt	NBLn1	EBL	EBT	EBR	WBL	WBT	WBR	SBLn1
Capacity (veh/h)	343	1187	-	-	1197	-	-	337
HCM Lane V/C Ratio	0.206	0.002	-	-	0.004	-	-	0.451
HCM Control Delay (s)	18.2	8	0	-	8	0	-	24.2
HCM Lane LOS	C	A	A	-	A	A	-	C
HCM 95th %tile Q(veh)	0.8	0	-	-	0	-	-	2.2

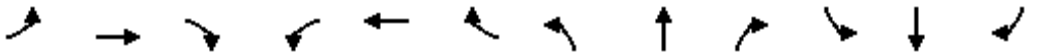

Movement	EBL	EBT	EBR	WBL	WBT	WBR	NBL	NBT	NBR	SBL	SBT	SBR
Lane Configurations												
Traffic Volume (veh/h)	70	122	101	70	148	106	122	659	65	95	806	48
Future Volume (veh/h)	70	122	101	70	148	106	122	659	65	95	806	48
Initial Q (Qb), veh	0	0	0	0	0	0	0	0	0	0	0	0
Ped-Bike Adj(A_pbT)	1.00		0.95	1.00		0.96	1.00		0.96	1.00		0.96
Parking Bus, Adj	1.00	1.00	1.00	1.00	1.00	1.00	1.00	1.00	1.00	1.00	1.00	1.00
Work Zone On Approach		No			No			No			No	
Adj Sat Flow, veh/h/ln	1870	1870	1870	1870	1870	1870	1870	1870	1870	1870	1870	1870
Adj Flow Rate, veh/h	76	133	110	89	187	134	127	686	68	103	876	52
Peak Hour Factor	0.92	0.92	0.92	0.79	0.79	0.79	0.96	0.96	0.96	0.92	0.92	0.92
Percent Heavy Veh, %	2	2	2	2	2	2	2	2	2	2	2	2
Cap, veh/h	97	283	229	112	299	243	153	1710	169	127	1738	103
Arrive On Green	0.05	0.15	0.15	0.06	0.16	0.16	0.09	0.53	0.53	0.07	0.51	0.51
Sat Flow, veh/h	1781	1870	1513	1781	1870	1516	1781	3253	322	1781	3400	202
Grp Volume(v), veh/h	76	133	110	89	187	134	127	374	380	103	458	470
Grp Sat Flow(s),veh/h/ln	1781	1870	1513	1781	1870	1516	1781	1777	1798	1781	1777	1825
Q Serve(g_s), s	5.1	7.8	8.0	5.9	11.2	9.8	8.4	15.2	15.2	6.8	20.4	20.4
Cycle Q Clear(g_c), s	5.1	7.8	8.0	5.9	11.2	9.8	8.4	15.2	15.2	6.8	20.4	20.4
Prop In Lane	1.00		1.00	1.00		1.00	1.00		0.18	1.00		0.11
Lane Grp Cap(c), veh/h	97	283	229	112	299	243	153	934	945	127	909	933
V/C Ratio(X)	0.79	0.47	0.48	0.80	0.62	0.55	0.83	0.40	0.40	0.81	0.50	0.50
Avail Cap(c_a), veh/h	154	500	405	169	516	418	214	934	945	181	909	933
HCM Platoon Ratio	1.00	1.00	1.00	1.00	1.00	1.00	1.00	1.00	1.00	1.00	1.00	1.00
Upstream Filter(I)	1.00	1.00	1.00	0.80	0.80	0.80	0.90	0.90	0.90	1.00	1.00	1.00
Uniform Delay (d), s/veh	56.1	46.5	46.6	55.5	47.0	46.4	54.0	17.1	17.1	54.9	19.3	19.3
Incr Delay (d2), s/veh	5.2	0.4	0.6	6.0	0.6	0.6	11.3	1.2	1.1	10.9	2.0	1.9
Initial Q Delay(d3),s/veh	0.0	0.0	0.0	0.0	0.0	0.0	0.0	0.0	0.0	0.0	0.0	0.0
%ile BackOfQ(50%),veh/ln	2.4	3.6	3.0	2.8	5.2	3.7	4.3	6.4	6.5	3.5	8.8	9.0
Unsig. Movement Delay, s/veh												
LnGrp Delay(d),s/veh	61.3	46.9	47.2	61.5	47.7	47.0	65.3	18.2	18.2	65.8	21.3	21.2
LnGrp LOS	E	D	D	E	D	D	E	B	B	E	C	C
Approach Vol, veh/h		319			410			881			1031	
Approach Delay, s/veh		50.4			50.5			25.0			25.7	
Approach LOS		D			D			C			C	

Timer - Assigned Phs	1	2	3	4	5	6	7	8
Phs Duration (G+Y+Rc), s	14.2	68.8	13.1	23.9	15.9	67.1	12.1	24.9
Change Period (Y+Rc), s	5.6	5.7	5.6	5.7	5.6	5.7	5.6	5.7
Max Green Setting (Gmax), s	12.2	41.7	11.4	32.1	14.4	39.5	10.4	33.1
Max Q Clear Time (g_c+I1), s	8.8	17.2	7.9	10.0	10.4	22.4	7.1	13.2
Green Ext Time (p_c), s	0.0	3.2	0.0	0.6	0.1	3.8	0.0	0.8

Intersection Summary	
HCM 6th Ctrl Delay	32.3
HCM 6th LOS	C



Movement	EBL	EBT	EBR	WBL	WBT	WBR	NBL	NBT	NBR	SBL	SBT	SBR
Lane Configurations												
Traffic Volume (veh/h)	38	182	91	23	164	27	94	413	27	61	599	52
Future Volume (veh/h)	38	182	91	23	164	27	94	413	27	61	599	52
Initial Q (Qb), veh	0	0	0	0	0	0	0	0	0	0	0	0
Ped-Bike Adj(A_pbT)	1.00		0.97	0.99		0.97	1.00		0.96	1.00		0.95
Parking Bus, Adj	1.00	1.00	1.00	1.00	1.00	1.00	1.00	1.00	1.00	1.00	1.00	1.00
Work Zone On Approach		No			No			No			No	
Adj Sat Flow, veh/h/ln	1870	1870	1870	1870	1870	1870	1870	1870	1870	1870	1870	1870
Adj Flow Rate, veh/h	46	222	111	31	222	36	109	480	31	80	788	68
Peak Hour Factor	0.82	0.82	0.82	0.74	0.74	0.74	0.86	0.86	0.86	0.76	0.76	0.76
Percent Heavy Veh, %	2	2	2	2	2	2	2	2	2	2	2	2
Cap, veh/h	156	440	220	88	328	50	143	1217	78	107	1121	97
Arrive On Green	0.09	0.38	0.38	0.23	0.23	0.23	0.08	0.36	0.36	0.06	0.34	0.34
Sat Flow, veh/h	1781	1165	582	105	1418	217	1781	3379	218	1781	3296	284
Grp Volume(v), veh/h	46	0	333	289	0	0	109	252	259	80	425	431
Grp Sat Flow(s),veh/h/ln	1781	0	1747	1739	0	0	1781	1777	1819	1781	1777	1803
Q Serve(g_s), s	1.5	0.0	9.2	3.3	0.0	0.0	3.8	6.6	6.7	2.8	13.0	13.1
Cycle Q Clear(g_c), s	1.5	0.0	9.2	9.4	0.0	0.0	3.8	6.6	6.7	2.8	13.0	13.1
Prop In Lane	1.00		0.33	0.11		0.12	1.00		0.12	1.00		0.16
Lane Grp Cap(c), veh/h	156	0	661	466	0	0	143	640	655	107	604	613
V/C Ratio(X)	0.29	0.00	0.50	0.62	0.00	0.00	0.76	0.39	0.40	0.75	0.70	0.70
Avail Cap(c_a), veh/h	320	0	1347	971	0	0	405	1342	1374	320	1257	1276
HCM Platoon Ratio	1.00	1.00	1.00	1.00	1.00	1.00	1.00	1.00	1.00	1.00	1.00	1.00
Upstream Filter(I)	1.00	0.00	1.00	1.00	0.00	0.00	1.00	1.00	1.00	1.00	1.00	1.00
Uniform Delay (d), s/veh	26.9	0.0	15.0	22.1	0.0	0.0	28.4	15.0	15.0	29.1	18.0	18.0
Incr Delay (d2), s/veh	1.0	0.0	0.6	1.4	0.0	0.0	8.2	0.4	0.4	10.1	1.5	1.5
Initial Q Delay(d3),s/veh	0.0	0.0	0.0	0.0	0.0	0.0	0.0	0.0	0.0	0.0	0.0	0.0
%ile BackOfQ(50%),veh/ln	0.7	0.0	3.3	3.7	0.0	0.0	1.9	2.5	2.6	1.4	5.1	5.2
Unsig. Movement Delay, s/veh												
LnGrp Delay(d),s/veh	27.9	0.0	15.6	23.5	0.0	0.0	36.6	15.4	15.4	39.2	19.5	19.5
LnGrp LOS	C	A	B	C	A	A	D	B	B	D	B	B
Approach Vol, veh/h		379			289			620			936	
Approach Delay, s/veh		17.1			23.5			19.1			21.2	
Approach LOS		B			C			B			C	

Timer - Assigned Phs	1	2		4	5	6	7	8
Phs Duration (G+Y+Rc), s	7.5	27.2		28.3	8.7	25.9	9.2	19.1
Change Period (Y+Rc), s	3.7	4.5		4.5	3.7	4.5	3.7	4.5
Max Green Setting (Gmax), s	11.3	47.5		48.5	14.3	44.5	11.3	33.5
Max Q Clear Time (g_c+I1), s	4.8	8.7		11.2	5.8	15.1	3.5	11.4
Green Ext Time (p_c), s	0.1	3.4		2.2	0.1	6.2	0.0	1.7

Intersection Summary	
HCM 6th Ctrl Delay	20.2
HCM 6th LOS	C



Movement	EBL	EBT	EBR	WBL	WBT	WBR	NBL	NBT	NBR	SBL	SBT	SBR
Lane Configurations												
Traffic Volume (veh/h)	37	134	79	139	126	175	38	643	91	99	791	30
Future Volume (veh/h)	37	134	79	139	126	175	38	643	91	99	791	30
Initial Q (Qb), veh	0	0	0	0	0	0	0	0	0	0	0	0
Ped-Bike Adj(A_pbT)	1.00		0.96	1.00		0.96	1.00		0.95	1.00		0.96
Parking Bus, Adj	1.00	1.00	1.00	1.00	1.00	1.00	1.00	1.00	1.00	1.00	1.00	1.00
Work Zone On Approach		No			No			No			No	
Adj Sat Flow, veh/h/ln	1870	1870	1870	1870	1870	1870	1870	1870	1870	1870	1870	1870
Adj Flow Rate, veh/h	40	144	85	145	131	182	48	814	52	112	899	34
Peak Hour Factor	0.93	0.93	0.93	0.96	0.96	0.96	0.79	0.79	0.79	0.88	0.88	0.88
Percent Heavy Veh, %	2	2	2	2	2	2	2	2	2	2	2	2
Cap, veh/h	51	185	109	192	174	307	74	1065	68	138	1224	46
Arrive On Green	0.20	0.20	0.20	0.20	0.20	0.20	0.04	0.32	0.32	0.08	0.35	0.35
Sat Flow, veh/h	258	928	548	957	865	1526	1781	3380	216	1781	3484	132
Grp Volume(v), veh/h	269	0	0	276	0	182	48	428	438	112	458	475
Grp Sat Flow(s),veh/h/ln	1734	0	0	1822	0	1526	1781	1777	1819	1781	1777	1839
Q Serve(g_s), s	16.6	0.0	0.0	16.1	0.0	12.2	3.0	24.5	24.5	7.0	25.4	25.4
Cycle Q Clear(g_c), s	16.6	0.0	0.0	16.1	0.0	12.2	3.0	24.5	24.5	7.0	25.4	25.4
Prop In Lane	0.15		0.32	0.53		1.00	1.00		0.12	1.00		0.07
Lane Grp Cap(c), veh/h	346	0	0	366	0	307	74	560	573	138	624	646
V/C Ratio(X)	0.78	0.00	0.00	0.75	0.00	0.59	0.65	0.76	0.76	0.81	0.73	0.73
Avail Cap(c_a), veh/h	569	0	0	598	0	501	96	652	668	179	734	760
HCM Platoon Ratio	1.00	1.00	1.00	1.00	1.00	1.00	1.00	1.00	1.00	1.00	1.00	1.00
Upstream Filter(I)	1.00	0.00	0.00	1.00	0.00	1.00	1.00	1.00	1.00	1.00	1.00	1.00
Uniform Delay (d), s/veh	42.7	0.0	0.0	42.4	0.0	40.9	53.2	34.8	34.8	51.2	32.0	32.0
Incr Delay (d2), s/veh	3.8	0.0	0.0	3.2	0.0	1.8	3.6	8.2	8.1	15.0	6.4	6.2
Initial Q Delay(d3),s/veh	0.0	0.0	0.0	0.0	0.0	0.0	0.0	0.0	0.0	0.0	0.0	0.0
%ile BackOfQ(50%),veh/ln	7.4	0.0	0.0	7.4	0.0	4.7	1.4	11.5	11.7	3.6	11.6	12.0
Unsig. Movement Delay, s/veh												
LnGrp Delay(d),s/veh	46.5	0.0	0.0	45.6	0.0	42.7	56.8	43.1	42.9	66.2	38.3	38.1
LnGrp LOS	D	A	A	D	A	D	E	D	D	E	D	D
Approach Vol, veh/h		269			458			914			1045	
Approach Delay, s/veh		46.5			44.4			43.7			41.2	
Approach LOS		D			D			D			D	

Timer - Assigned Phs	1	2		4	5	6		8
Phs Duration (G+Y+Rc), s	10.4	45.0		28.8	14.4	40.9		28.6
Change Period (Y+Rc), s	* 5.7	5.4		6.1	* 5.7	5.4		6.1
Max Green Setting (Gmax), s	* 6.1	46.6		37.0	* 11	41.4		37.0
Max Q Clear Time (g_c+I1), s	15.0	27.4		18.1	9.0	26.5		18.6
Green Ext Time (p_c), s	0.0	11.6		2.1	0.0	9.0		1.4

Intersection Summary	
HCM 6th Ctrl Delay	43.2
HCM 6th LOS	D

Notes

* HCM 6th computational engine requires equal clearance times for the phases crossing the barrier.



Movement	EBL	EBT	EBR	WBL	WBT	WBR	NBL	NBT	NBR	SBL	SBT	SBR
Lane Configurations												
Traffic Volume (veh/h)	54	105	183	70	146	65	128	518	39	44	519	53
Future Volume (veh/h)	54	105	183	70	146	65	128	518	39	44	519	53
Initial Q (Qb), veh	0	0	0	0	0	0	0	0	0	0	0	0
Ped-Bike Adj(A_pbT)	1.00		0.91	1.00		0.95	1.00		0.96	1.00		0.95
Parking Bus, Adj	1.00	1.00	1.00	1.00	1.00	1.00	1.00	1.00	1.00	1.00	1.00	1.00
Work Zone On Approach		No			No			No			No	
Adj Sat Flow, veh/h/ln	1870	1870	1870	1870	1870	1870	1870	1870	1870	1870	1870	1870
Adj Flow Rate, veh/h	59	115	201	111	232	103	142	576	43	48	564	58
Peak Hour Factor	0.91	0.91	0.91	0.63	0.63	0.63	0.90	0.90	0.90	0.92	0.92	0.92
Percent Heavy Veh, %	2	2	2	2	2	2	2	2	2	2	2	2
Cap, veh/h	75	147	174	116	243	108	169	649	48	62	597	482
Arrive On Green	0.12	0.12	0.12	0.27	0.27	0.27	0.09	0.38	0.38	0.03	0.32	0.32
Sat Flow, veh/h	624	1216	1443	435	910	404	1781	1713	128	1781	1870	1511
Grp Volume(v), veh/h	174	0	201	446	0	0	142	0	619	48	564	58
Grp Sat Flow(s),veh/h/ln	1839	0	1443	1750	0	0	1781	0	1841	1781	1870	1511
Q Serve(g_s), s	10.7	0.0	14.1	29.3	0.0	0.0	9.1	0.0	36.7	3.1	34.3	3.2
Cycle Q Clear(g_c), s	10.7	0.0	14.1	29.3	0.0	0.0	9.1	0.0	36.7	3.1	34.3	3.2
Prop In Lane	0.34		1.00	0.25		0.23	1.00		0.07	1.00		1.00
Lane Grp Cap(c), veh/h	222	0	174	467	0	0	169	0	698	62	597	482
V/C Ratio(X)	0.78	0.00	1.15	0.96	0.00	0.00	0.84	0.00	0.89	0.78	0.95	0.12
Avail Cap(c_a), veh/h	222	0	174	467	0	0	174	0	723	89	645	521
HCM Platoon Ratio	1.00	1.00	1.00	1.00	1.00	1.00	1.00	1.00	1.00	1.00	1.00	1.00
Upstream Filter(I)	1.00	0.00	1.00	1.00	0.00	0.00	1.00	0.00	1.00	1.00	1.00	1.00
Uniform Delay (d), s/veh	49.8	0.0	51.3	42.1	0.0	0.0	51.9	0.0	33.9	55.9	38.7	28.1
Incr Delay (d2), s/veh	15.1	0.0	115.2	30.4	0.0	0.0	27.3	0.0	12.1	14.1	21.5	0.0
Initial Q Delay(d3),s/veh	0.0	0.0	0.0	0.0	0.0	0.0	0.0	0.0	0.0	0.0	0.0	0.0
%ile BackOfQ(50%),veh/ln	5.8	0.0	10.6	16.3	0.0	0.0	5.3	0.0	17.8	1.6	18.5	1.1
Unsig. Movement Delay, s/veh												
LnGrp Delay(d),s/veh	64.9	0.0	166.5	72.5	0.0	0.0	79.2	0.0	46.0	70.0	60.2	28.2
LnGrp LOS	E	A	F	E	A	A	E	A	D	E	E	C
Approach Vol, veh/h		375			446			761			670	
Approach Delay, s/veh		119.3			72.5			52.2			58.1	
Approach LOS		F			E			D			E	

Timer - Assigned Phs	1	2		4	5	6		8
Phs Duration (G+Y+Rc), s	9.6	50.0		20.0	16.6	43.0		37.0
Change Period (Y+Rc), s	5.6	5.8		5.9	5.6	5.8		5.9
Max Green Setting (Gmax), s	5.8	45.8		14.1	11.4	40.2		31.1
Max Q Clear Time (g_c+I1), s	5.1	38.7		16.1	11.1	36.3		31.3
Green Ext Time (p_c), s	0.0	1.5		0.0	0.0	0.9		0.0

Intersection Summary		
HCM 6th Ctrl Delay		69.2
HCM 6th LOS		E

Intersection	
Intersection Delay, s/veh	50.8
Intersection LOS	F

Movement	EBL	EBT	EBR	WBL	WBT	WBR	NBL	NBT	NBR	SBL	SBT	SBR
Lane Configurations												
Traffic Vol, veh/h	41	118	79	43	108	54	58	422	39	109	538	59
Future Vol, veh/h	41	118	79	43	108	54	58	422	39	109	538	59
Peak Hour Factor	0.81	0.81	0.81	0.89	0.89	0.89	0.86	0.86	0.86	0.73	0.73	0.73
Heavy Vehicles, %	2	2	2	2	2	2	2	2	2	2	2	2
Mvmt Flow	51	146	98	48	121	61	67	491	45	149	737	81
Number of Lanes	0	1	0	0	1	0	1	2	0	1	2	0

Approach	EB	WB	NB	SB
Opposing Approach	WB	EB	SB	NB
Opposing Lanes	1	1	3	3
Conflicting Approach Left	SB	NB	EB	WB
Conflicting Lanes Left	3	3	1	1
Conflicting Approach Right	NB	SB	WB	EB
Conflicting Lanes Right	3	3	1	1
HCM Control Delay	34.9	26.2	29	75.2
HCM LOS	D	D	D	F

Lane	NBLn1	NBLn2	NBLn3	EBLn1	WBLn1	SBLn1	SBLn2	SBLn3
Vol Left, %	100%	0%	0%	17%	21%	100%	0%	0%
Vol Thru, %	0%	100%	78%	50%	53%	0%	100%	75%
Vol Right, %	0%	0%	22%	33%	26%	0%	0%	25%
Sign Control	Stop	Stop	Stop	Stop	Stop	Stop	Stop	Stop
Traffic Vol by Lane	58	281	180	238	205	109	359	238
LT Vol	58	0	0	41	43	109	0	0
Through Vol	0	281	141	118	108	0	359	179
RT Vol	0	0	39	79	54	0	0	59
Lane Flow Rate	67	327	209	294	230	149	491	326
Geometry Grp	7	7	7	7	7	7	7	7
Degree of Util (X)	0.172	0.786	0.493	0.742	0.601	0.373	1.155	0.751
Departure Headway (Hd)	9.541	9.014	8.854	9.447	9.774	8.988	8.464	8.282
Convergence, Y/N	Yes	Yes	Yes	Yes	Yes	Yes	Yes	Yes
Cap	378	406	409	385	371	399	427	434
Service Time	7.241	6.714	6.554	7.147	7.474	6.782	6.257	6.075
HCM Lane V/C Ratio	0.177	0.805	0.511	0.764	0.62	0.373	1.15	0.751
HCM Control Delay	14.2	37.8	19.9	34.9	26.2	17.1	121.4	32.3
HCM Lane LOS	B	E	C	D	D	C	F	D
HCM 95th-tile Q	0.6	6.8	2.6	5.8	3.8	1.7	18.2	6.2



Movement	EBL	EBT	EBR	WBL	WBT	WBR	NBL	NBT	NBR	SBL	SBT	SBR
Lane Configurations												
Traffic Volume (veh/h)	75	49	197	58	28	16	77	663	35	18	809	54
Future Volume (veh/h)	75	49	197	58	28	16	77	663	35	18	809	54
Initial Q (Qb), veh	0	0	0	0	0	0	0	0	0	0	0	0
Ped-Bike Adj(A_pbT)	1.00		0.96	1.00		0.95	1.00		0.96	1.00		0.96
Parking Bus, Adj	1.00	1.00	1.00	1.00	1.00	1.00	1.00	1.00	1.00	1.00	1.00	1.00
Work Zone On Approach		No			No			No			No	
Adj Sat Flow, veh/h/ln	1870	1870	1870	1870	1870	1870	1870	1870	1870	1870	1870	1870
Adj Flow Rate, veh/h	96	63	253	76	37	21	79	684	36	20	879	59
Peak Hour Factor	0.78	0.78	0.78	0.76	0.76	0.76	0.97	0.97	0.97	0.92	0.92	0.92
Percent Heavy Veh, %	2	2	2	2	2	2	2	2	2	2	2	2
Cap, veh/h	212	139	295	131	64	36	122	1429	75	63	1293	87
Arrive On Green	0.19	0.19	0.19	0.13	0.13	0.13	0.07	0.42	0.42	0.04	0.38	0.38
Sat Flow, veh/h	1096	719	1524	995	484	275	1781	3426	180	1781	3369	226
Grp Volume(v), veh/h	159	0	253	134	0	0	79	355	365	20	464	474
Grp Sat Flow(s),veh/h/ln	1816	0	1524	1754	0	0	1781	1777	1829	1781	1777	1818
Q Serve(g_s), s	6.8	0.0	14.1	6.3	0.0	0.0	3.8	12.7	12.7	1.0	19.0	19.0
Cycle Q Clear(g_c), s	6.8	0.0	14.1	6.3	0.0	0.0	3.8	12.7	12.7	1.0	19.0	19.0
Prop In Lane	0.60		1.00	0.57		0.16	1.00		0.10	1.00		0.12
Lane Grp Cap(c), veh/h	351	0	295	231	0	0	122	741	763	63	682	698
V/C Ratio(X)	0.45	0.00	0.86	0.58	0.00	0.00	0.65	0.48	0.48	0.32	0.68	0.68
Avail Cap(c_a), veh/h	442	0	371	527	0	0	214	905	932	169	861	880
HCM Platoon Ratio	1.00	1.00	1.00	1.00	1.00	1.00	1.00	1.00	1.00	1.00	1.00	1.00
Upstream Filter(I)	1.00	0.00	1.00	1.00	0.00	0.00	1.00	1.00	1.00	1.00	1.00	1.00
Uniform Delay (d), s/veh	31.2	0.0	34.1	35.7	0.0	0.0	39.8	18.6	18.6	41.2	22.5	22.5
Incr Delay (d2), s/veh	0.9	0.0	15.0	2.3	0.0	0.0	2.2	1.7	1.7	1.1	4.4	4.3
Initial Q Delay(d3),s/veh	0.0	0.0	0.0	0.0	0.0	0.0	0.0	0.0	0.0	0.0	0.0	0.0
%ile BackOfQ(50%),veh/ln	3.0	0.0	6.3	2.8	0.0	0.0	1.7	5.2	5.3	0.4	8.1	8.3
Unsig. Movement Delay, s/veh												
LnGrp Delay(d),s/veh	32.1	0.0	49.2	38.0	0.0	0.0	41.9	20.3	20.3	42.3	26.8	26.7
LnGrp LOS	C	A	D	D	A	A	D	C	C	D	C	C
Approach Vol, veh/h		412			134			799			958	
Approach Delay, s/veh		42.6			38.0			22.4			27.1	
Approach LOS		D			D			C			C	

Timer - Assigned Phs	1	2		4	5	6		8
Phs Duration (G+Y+Rc), s	10.7	39.0		16.2	7.8	41.9		21.6
Change Period (Y+Rc), s	* 4.7	5.4		* 4.7	* 4.7	5.4		4.7
Max Green Setting (Gmax), s	* 11	42.4		* 26	* 8.3	44.6		21.3
Max Q Clear Time (g_c+I1), s	5.8	21.0		8.3	3.0	14.7		16.1
Green Ext Time (p_c), s	0.0	12.6		0.6	0.0	11.5		0.9

Intersection Summary		
HCM 6th Ctrl Delay	28.9	
HCM 6th LOS	C	

Notes

* HCM 6th computational engine requires equal clearance times for the phases crossing the barrier.



Movement	EBL	EBT	EBR	WBL	WBT	WBR	NBL	NBT	NBR	SBL	SBT	SBR
Lane Configurations												
Traffic Volume (veh/h)	99	58	237	75	63	53	192	524	40	58	730	90
Future Volume (veh/h)	99	58	237	75	63	53	192	524	40	58	730	90
Initial Q (Qb), veh	0	0	0	0	0	0	0	0	0	0	0	0
Ped-Bike Adj(A_pbT)	1.00		0.97	0.99		0.96	1.00		0.96	1.00		0.97
Parking Bus, Adj	1.00	1.00	1.00	1.00	1.00	1.00	1.00	1.00	1.00	1.00	1.00	1.00
Work Zone On Approach		No			No			No			No	
Adj Sat Flow, veh/h/ln	1870	1870	1870	1870	1870	1870	1870	1870	1870	1870	1870	1870
Adj Flow Rate, veh/h	110	64	263	87	73	62	206	563	43	62	777	96
Peak Hour Factor	0.90	0.90	0.90	0.86	0.86	0.86	0.93	0.93	0.93	0.94	0.94	0.94
Percent Heavy Veh, %	2	2	2	2	2	2	2	2	2	2	2	2
Cap, veh/h	139	668	551	155	123	86	245	1349	103	80	990	122
Arrive On Green	0.08	0.36	0.36	0.22	0.22	0.22	0.14	0.40	0.40	0.04	0.31	0.31
Sat Flow, veh/h	1781	1870	1543	457	566	396	1781	3335	254	1781	3171	392
Grp Volume(v), veh/h	110	64	263	222	0	0	206	299	307	62	435	438
Grp Sat Flow(s),veh/h/ln	1781	1870	1543	1419	0	0	1781	1777	1812	1781	1777	1786
Q Serve(g_s), s	5.5	2.1	11.9	10.0	0.0	0.0	10.2	10.9	11.0	3.1	20.2	20.2
Cycle Q Clear(g_c), s	5.5	2.1	11.9	12.8	0.0	0.0	10.2	10.9	11.0	3.1	20.2	20.2
Prop In Lane	1.00		1.00	0.39		0.28	1.00		0.14	1.00		0.22
Lane Grp Cap(c), veh/h	139	668	551	363	0	0	245	719	733	80	554	557
V/C Ratio(X)	0.79	0.10	0.48	0.61	0.00	0.00	0.84	0.42	0.42	0.78	0.78	0.79
Avail Cap(c_a), veh/h	207	1016	839	565	0	0	363	863	880	187	688	692
HCM Platoon Ratio	1.00	1.00	1.00	1.00	1.00	1.00	1.00	1.00	1.00	1.00	1.00	1.00
Upstream Filter(I)	1.00	1.00	1.00	1.00	0.00	0.00	1.00	1.00	1.00	1.00	1.00	1.00
Uniform Delay (d), s/veh	40.9	19.3	22.5	32.4	0.0	0.0	38.0	19.3	19.3	42.7	28.3	28.3
Incr Delay (d2), s/veh	6.4	0.0	0.2	0.6	0.0	0.0	10.9	0.5	0.5	5.9	5.5	5.5
Initial Q Delay(d3),s/veh	0.0	0.0	0.0	0.0	0.0	0.0	0.0	0.0	0.0	0.0	0.0	0.0
%ile BackOfQ(50%),veh/ln	2.6	0.9	4.2	4.4	0.0	0.0	5.1	4.4	4.6	1.5	9.1	9.2
Unsig. Movement Delay, s/veh												
LnGrp Delay(d),s/veh	47.3	19.4	22.8	33.0	0.0	0.0	49.0	19.8	19.8	48.6	33.8	33.8
LnGrp LOS	D	B	C	C	A	A	D	B	B	D	C	C
Approach Vol, veh/h		437			222			812			935	
Approach Delay, s/veh		28.4			33.0			27.2			34.8	
Approach LOS		C			C			C			C	

Timer - Assigned Phs	1	2		4	5	6	7	8
Phs Duration (G+Y+Rc), s	9.6	42.3		38.4	18.0	33.9	12.6	25.8
Change Period (Y+Rc), s	5.6	5.7		6.2	5.6	5.7	5.6	6.2
Max Green Setting (Gmax), s	9.5	43.9		49.1	18.4	35.0	10.5	33.0
Max Q Clear Time (g_c+I1), s	5.1	13.0		13.9	12.2	22.2	7.5	14.8
Green Ext Time (p_c), s	0.0	5.9		0.7	0.3	6.0	0.0	0.9

Intersection Summary		
HCM 6th Ctrl Delay		30.9
HCM 6th LOS		C



Movement	EBL	EBT	EBR	WBL	WBT	WBR	NBL	NBT	NBR	SBL	SBT	SBR
Lane Configurations												
Traffic Volume (veh/h)	0	0	0	220	2	270	221	786	0	0	1081	98
Future Volume (veh/h)	0	0	0	220	2	270	221	786	0	0	1081	98
Initial Q (Qb), veh				0	0	0	0	0	0	0	0	0
Ped-Bike Adj(A_pbT)				1.00		0.97	1.00		1.00	1.00		0.96
Parking Bus, Adj				1.00	1.00	1.00	1.00	1.00	1.00	1.00	1.00	1.00
Work Zone On Approach					No			No			No	
Adj Sat Flow, veh/h/ln				1870	1870	1870	1870	1870	0	0	1870	1870
Adj Flow Rate, veh/h				237	2	290	299	1062	0	0	1228	111
Peak Hour Factor				0.93	0.93	0.93	0.74	0.74	0.74	0.88	0.88	0.88
Percent Heavy Veh, %				2	2	2	2	2	0	0	2	2
Cap, veh/h				420	4	364	329	2352	0	0	1419	128
Arrive On Green				0.24	0.24	0.24	0.18	0.66	0.00	0.00	0.43	0.43
Sat Flow, veh/h				1767	15	1532	1781	3647	0	0	3377	296
Grp Volume(v), veh/h				239	0	290	299	1062	0	0	663	676
Grp Sat Flow(s),veh/h/ln				1782	0	1532	1781	1777	0	0	1777	1803
Q Serve(g_s), s				12.3	0.0	18.6	17.2	15.1	0.0	0.0	35.3	35.6
Cycle Q Clear(g_c), s				12.3	0.0	18.6	17.2	15.1	0.0	0.0	35.3	35.6
Prop In Lane				0.99		1.00	1.00		0.00	0.00		0.16
Lane Grp Cap(c), veh/h				424	0	364	329	2352	0	0	768	779
V/C Ratio(X)				0.56	0.00	0.80	0.91	0.45	0.00	0.00	0.86	0.87
Avail Cap(c_a), veh/h				633	0	544	366	2462	0	0	786	797
HCM Platoon Ratio				1.00	1.00	1.00	1.00	1.00	1.00	1.00	1.00	1.00
Upstream Filter(I)				1.00	0.00	1.00	1.00	1.00	0.00	0.00	1.00	1.00
Uniform Delay (d), s/veh				35.1	0.0	37.4	41.7	8.5	0.0	0.0	26.9	27.0
Incr Delay (d2), s/veh				1.2	0.0	4.9	23.1	0.5	0.0	0.0	11.6	11.8
Initial Q Delay(d3),s/veh				0.0	0.0	0.0	0.0	0.0	0.0	0.0	0.0	0.0
%ile BackOfQ(50%),veh/ln				5.5	0.0	7.4	9.4	5.1	0.0	0.0	16.4	16.8
Unsig. Movement Delay, s/veh												
LnGrp Delay(d),s/veh				36.2	0.0	42.4	64.8	9.0	0.0	0.0	38.5	38.8
LnGrp LOS				D	A	D	E	A	A	A	D	D
Approach Vol, veh/h					529			1361			1339	
Approach Delay, s/veh					39.6			21.3			38.7	
Approach LOS					D			C			D	

Timer - Assigned Phs	1	2		4		6						
Phs Duration (G+Y+Rc), s	24.0	50.6		29.9		74.6						
Change Period (Y+Rc), s	* 4.7	5.4		5.1		5.4						
Max Green Setting (Gmax), s	* 23	46.2		37.1		72.4						
Max Q Clear Time (g_c+I1), s	19.2	37.6		20.6		17.1						
Green Ext Time (p_c), s	0.1	7.5		2.3		25.9						

Intersection Summary	
HCM 6th Ctrl Delay	31.5
HCM 6th LOS	C

Notes

* HCM 6th computational engine requires equal clearance times for the phases crossing the barrier.



Movement	EBL	EBT	EBR	WBL	WBT	WBR	NBL	NBT	NBR	SBL	SBT	SBR
Lane Configurations												
Traffic Volume (veh/h)	71	3	296	0	0	0	0	934	312	383	918	0
Future Volume (veh/h)	71	3	296	0	0	0	0	934	312	383	918	0
Initial Q (Qb), veh	0	0	0				0	0	0	0	0	0
Ped-Bike Adj(A_pbT)	1.00		0.97				1.00		0.96	1.00		1.00
Parking Bus, Adj	1.00	1.00	1.00				1.00	1.00	1.00	1.00	1.00	1.00
Work Zone On Approach		No						No			No	
Adj Sat Flow, veh/h/ln	1870	1870	1870				0	1870	1870	1870	1870	0
Adj Flow Rate, veh/h	88	4	365				0	1168	390	461	1106	0
Peak Hour Factor	0.81	0.81	0.81				0.80	0.80	0.80	0.83	0.83	0.83
Percent Heavy Veh, %	2	2	2				0	2	2	2	2	0
Cap, veh/h	72	3	299				0	1267	540	488	2386	0
Arrive On Green	0.24	0.24	0.24				0.00	0.36	0.36	0.27	0.67	0.00
Sat Flow, veh/h	304	14	1259				0	3647	1515	1781	3647	0
Grp Volume(v), veh/h	457	0	0				0	1168	390	461	1106	0
Grp Sat Flow(s),veh/h/ln	1577	0	0				0	1777	1515	1781	1777	0
Q Serve(g_s), s	27.3	0.0	0.0				0.0	36.3	25.7	29.2	17.1	0.0
Cycle Q Clear(g_c), s	27.3	0.0	0.0				0.0	36.3	25.7	29.2	17.1	0.0
Prop In Lane	0.19		0.80				0.00		1.00	1.00		0.00
Lane Grp Cap(c), veh/h	374	0	0				0	1267	540	488	2386	0
V/C Ratio(X)	1.22	0.00	0.00				0.00	0.92	0.72	0.94	0.46	0.00
Avail Cap(c_a), veh/h	374	0	0				0	1272	543	562	2539	0
HCM Platoon Ratio	1.00	1.00	1.00				1.00	1.00	1.00	1.00	1.00	1.00
Upstream Filter(I)	1.00	0.00	0.00				0.00	1.00	1.00	1.00	1.00	0.00
Uniform Delay (d), s/veh	43.9	0.0	0.0				0.0	35.5	32.1	40.9	9.0	0.0
Incr Delay (d2), s/veh	121.5	0.0	0.0				0.0	12.1	7.2	22.1	0.5	0.0
Initial Q Delay(d3),s/veh	0.0	0.0	0.0				0.0	0.0	0.0	0.0	0.0	0.0
%ile BackOfQ(50%),veh/ln	28.2	0.0	0.0				0.0	17.1	10.1	15.4	5.9	0.0
Unsig. Movement Delay, s/veh												
LnGrp Delay(d),s/veh	165.4	0.0	0.0				0.0	47.6	39.3	63.0	9.5	0.0
LnGrp LOS	F	A	A				A	D	D	E	A	A
Approach Vol, veh/h		457						1558			1567	
Approach Delay, s/veh		165.4						45.5			25.3	
Approach LOS		F						D			C	

Timer - Assigned Phs		2			5	6		8				
Phs Duration (G+Y+Rc), s		82.7			36.3	46.4		32.4				
Change Period (Y+Rc), s		5.4			* 4.7	5.4		5.1				
Max Green Setting (Gmax), s		82.2			* 36	41.2		27.3				
Max Q Clear Time (g_c+I1), s		19.1			31.2	38.3		29.3				
Green Ext Time (p_c), s		29.1			0.4	2.8		0.0				

Intersection Summary												
HCM 6th Ctrl Delay			51.9									
HCM 6th LOS			D									

Notes

* HCM 6th computational engine requires equal clearance times for the phases crossing the barrier.



Movement	EBL	EBT	EBR	WBL	WBT	WBR	NBL	NBT	NBR	SBL	SBT	SBR
Lane Configurations												
Traffic Volume (veh/h)	0	0	0	167	6	60	0	618	319	0	771	69
Future Volume (veh/h)	0	0	0	167	6	60	0	618	319	0	771	69
Initial Q (Qb), veh				0	0	0	0	0	0	0	0	0
Ped-Bike Adj(A_pbT)				1.00		0.97	1.00		0.96	1.00		0.96
Parking Bus, Adj				1.00	1.00	1.00	1.00	1.00	1.00	1.00	1.00	1.00
Work Zone On Approach					No			No			No	
Adj Sat Flow, veh/h/ln				1870	1870	1870	0	1870	1870	0	1870	1870
Adj Flow Rate, veh/h				209	8	75	0	665	343	0	918	82
Peak Hour Factor				0.80	0.80	0.80	0.93	0.93	0.93	0.84	0.84	0.84
Percent Heavy Veh, %				2	2	2	0	2	2	0	2	2
Cap, veh/h				393	15	350	0	1579	677	0	2112	188
Arrive On Green				0.23	0.23	0.23	0.00	0.44	0.44	0.00	0.44	0.44
Sat Flow, veh/h				1719	66	1531	0	3647	1523	0	4923	423
Grp Volume(v), veh/h				217	0	75	0	665	343	0	656	344
Grp Sat Flow(s),veh/h/ln				1784	0	1531	0	1777	1523	0	1702	1774
Q Serve(g_s), s				4.1	0.0	1.5	0.0	4.9	6.2	0.0	5.1	5.1
Cycle Q Clear(g_c), s				4.1	0.0	1.5	0.0	4.9	6.2	0.0	5.1	5.1
Prop In Lane				0.96		1.00	0.00		1.00	0.00		0.24
Lane Grp Cap(c), veh/h				408	0	350	0	1579	677	0	1512	788
V/C Ratio(X)				0.53	0.00	0.21	0.00	0.42	0.51	0.00	0.43	0.44
Avail Cap(c_a), veh/h				2189	0	1878	0	5633	2414	0	5396	2812
HCM Platoon Ratio				1.00	1.00	1.00	1.00	1.00	1.00	1.00	1.00	1.00
Upstream Filter(I)				1.00	0.00	1.00	0.00	1.00	1.00	0.00	1.00	1.00
Uniform Delay (d), s/veh				12.9	0.0	12.0	0.0	7.3	7.6	0.0	7.3	7.3
Incr Delay (d2), s/veh				1.1	0.0	0.3	0.0	0.2	0.6	0.0	0.2	0.4
Initial Q Delay(d3),s/veh				0.0	0.0	0.0	0.0	0.0	0.0	0.0	0.0	0.0
%ile BackOfQ(50%),veh/ln				1.4	0.0	0.4	0.0	1.1	1.2	0.0	1.1	1.2
Unsig. Movement Delay, s/veh												
LnGrp Delay(d),s/veh				14.0	0.0	12.3	0.0	7.4	8.2	0.0	7.5	7.7
LnGrp LOS				B	A	B	A	A	A	A	A	A
Approach Vol, veh/h					292			1008			1000	
Approach Delay, s/veh					13.6			7.7			7.6	
Approach LOS					B			A			A	

Timer - Assigned Phs	2		6		8			
Phs Duration (G+Y+Rc), s	23.4		23.4		14.8			
Change Period (Y+Rc), s	6.4		6.4		6.1			
Max Green Setting (Gmax), s	60.6		60.6		46.9			
Max Q Clear Time (g_c+I1), s	8.2		7.1		6.1			
Green Ext Time (p_c), s	6.5		7.7		1.7			

Intersection Summary		
HCM 6th Ctrl Delay	8.4	
HCM 6th LOS	A	



Movement	EBL	EBT	EBR	WBL	WBT	WBR	NBL	NBT	NBR	SBL	SBT	SBR
Lane Configurations												
Traffic Volume (veh/h)	48	2	399	0	0	0	0	889	221	121	817	0
Future Volume (veh/h)	48	2	399	0	0	0	0	889	221	121	817	0
Initial Q (Qb), veh	0	0	0				0	0	0	0	0	0
Ped-Bike Adj(A_pbT)	1.00		0.95				1.00		0.96	1.00		1.00
Parking Bus, Adj	1.00	1.00	1.00				1.00	1.00	1.00	1.00	1.00	1.00
Work Zone On Approach		No						No			No	
Adj Sat Flow, veh/h/ln	1870	1870	1870				0	1870	1870	1870	1870	0
Adj Flow Rate, veh/h	56	2	464				0	936	233	134	908	0
Peak Hour Factor	0.86	0.86	0.86				0.95	0.95	0.95	0.90	0.90	0.90
Percent Heavy Veh, %	2	2	2				0	2	2	2	2	0
Cap, veh/h	431	15	660				0	1344	574	175	1997	0
Arrive On Green	0.25	0.25	0.25				0.00	0.38	0.38	0.10	0.56	0.00
Sat Flow, veh/h	1723	62	2639				0	3647	1517	1781	3647	0
Grp Volume(v), veh/h	58	0	464				0	936	233	134	908	0
Grp Sat Flow(s),veh/h/ln	1784	0	1319				0	1777	1517	1781	1777	0
Q Serve(g_s), s	1.7	0.0	10.6				0.0	14.8	7.5	4.9	10.0	0.0
Cycle Q Clear(g_c), s	1.7	0.0	10.6				0.0	14.8	7.5	4.9	10.0	0.0
Prop In Lane	0.97		1.00				0.00		1.00	1.00		0.00
Lane Grp Cap(c), veh/h	446	0	660				0	1344	574	175	1997	0
V/C Ratio(X)	0.13	0.00	0.70				0.00	0.70	0.41	0.77	0.45	0.00
Avail Cap(c_a), veh/h	963	0	1424				0	2489	1063	517	3824	0
HCM Platoon Ratio	1.00	1.00	1.00				1.00	1.00	1.00	1.00	1.00	1.00
Upstream Filter(I)	1.00	0.00	1.00				0.00	1.00	1.00	1.00	1.00	0.00
Uniform Delay (d), s/veh	19.3	0.0	22.7				0.0	17.5	15.2	29.3	8.6	0.0
Incr Delay (d2), s/veh	0.1	0.0	1.4				0.0	0.7	0.5	6.9	0.2	0.0
Initial Q Delay(d3),s/veh	0.0	0.0	0.0				0.0	0.0	0.0	0.0	0.0	0.0
%ile BackOfQ(50%),veh/ln	0.7	0.0	3.2				0.0	5.3	2.3	2.3	2.9	0.0
Unsig. Movement Delay, s/veh												
LnGrp Delay(d),s/veh	19.5	0.0	24.1				0.0	18.1	15.7	36.1	8.7	0.0
LnGrp LOS	B	A	C				A	B	B	D	A	A
Approach Vol, veh/h		522						1169			1042	
Approach Delay, s/veh		23.6						17.6			12.3	
Approach LOS		C						B			B	

Timer - Assigned Phs	1	2	4	6
Phs Duration (G+Y+Rc), s	12.2	31.6	22.7	43.8
Change Period (Y+Rc), s	* 5.7	6.4	6.1	6.4
Max Green Setting (Gmax), s	* 13	46.6	35.9	71.6
Max Q Clear Time (g_c+I1), s	10.9	16.8	12.6	12.0
Green Ext Time (p_c), s	0.2	8.2	2.4	7.4

Intersection Summary	
HCM 6th Ctrl Delay	16.7
HCM 6th LOS	B

Notes

* HCM 6th computational engine requires equal clearance times for the phases crossing the barrier.



Movement	EBL	EBT	EBR	WBL	WBT	WBR	NBL	NBT	NBR	SBL	SBT	SBR
Lane Configurations												
Traffic Volume (veh/h)	41	73	32	3	108	79	28	49	3	108	123	35
Future Volume (veh/h)	41	73	32	3	108	79	28	49	3	108	123	35
Initial Q (Qb), veh	0	0	0	0	0	0	0	0	0	0	0	0
Ped-Bike Adj(A_pbT)	1.00		0.96	1.00		0.95	1.00		0.98	1.00		0.96
Parking Bus, Adj	1.00	1.00	1.00	1.00	1.00	1.00	1.00	1.00	1.00	1.00	1.00	1.00
Work Zone On Approach		No			No			No			No	
Adj Sat Flow, veh/h/ln	1870	1870	1870	1870	1870	1870	1870	1870	1870	1870	1870	1870
Adj Flow Rate, veh/h	46	82	36	3	119	87	41	71	4	116	132	38
Peak Hour Factor	0.89	0.89	0.89	0.91	0.91	0.91	0.69	0.69	0.69	0.93	0.93	0.93
Percent Heavy Veh, %	2	2	2	2	2	2	2	2	2	2	2	2
Cap, veh/h	75	348	283	7	277	224	70	1599	696	148	1345	372
Arrive On Green	0.04	0.19	0.19	0.00	0.15	0.15	0.04	0.45	0.45	0.08	0.49	0.49
Sat Flow, veh/h	1781	1870	1523	1781	1870	1512	1781	3554	1548	1781	2725	753
Grp Volume(v), veh/h	46	82	36	3	119	87	41	71	4	116	84	86
Grp Sat Flow(s),veh/h/ln	1781	1870	1523	1781	1870	1512	1781	1777	1548	1781	1777	1700
Q Serve(g_s), s	1.8	2.6	1.4	0.1	4.1	3.6	1.6	0.8	0.1	4.5	1.8	1.9
Cycle Q Clear(g_c), s	1.8	2.6	1.4	0.1	4.1	3.6	1.6	0.8	0.1	4.5	1.8	1.9
Prop In Lane	1.00		1.00	1.00		1.00	1.00		1.00	1.00		0.44
Lane Grp Cap(c), veh/h	75	348	283	7	277	224	70	1599	696	148	877	840
V/C Ratio(X)	0.61	0.24	0.13	0.42	0.43	0.39	0.59	0.04	0.01	0.78	0.10	0.10
Avail Cap(c_a), veh/h	173	961	782	127	913	738	127	1599	696	221	877	840
HCM Platoon Ratio	1.00	1.00	1.00	1.00	1.00	1.00	1.00	1.00	1.00	1.00	1.00	1.00
Upstream Filter(I)	1.00	1.00	1.00	1.00	1.00	1.00	1.00	1.00	1.00	1.00	1.00	1.00
Uniform Delay (d), s/veh	33.0	24.3	23.8	34.8	27.2	27.0	33.1	10.8	10.6	31.5	9.4	9.5
Incr Delay (d2), s/veh	3.0	0.3	0.2	13.6	1.1	1.1	2.9	0.1	0.0	5.2	0.2	0.2
Initial Q Delay(d3),s/veh	0.0	0.0	0.0	0.0	0.0	0.0	0.0	0.0	0.0	0.0	0.0	0.0
%ile BackOfQ(50%),veh/ln	0.8	1.1	0.5	0.1	1.8	1.3	0.7	0.3	0.0	2.1	0.7	0.7
Unsig. Movement Delay, s/veh												
LnGrp Delay(d),s/veh	36.0	24.6	24.0	48.4	28.2	28.1	36.0	10.9	10.6	36.7	9.6	9.7
LnGrp LOS	D	C	C	D	C	C	D	B	B	D	A	A
Approach Vol, veh/h		164			209			116			286	
Approach Delay, s/veh		27.7			28.5			19.7			20.6	
Approach LOS		C			C			B			C	

Timer - Assigned Phs	1	2	3	4	5	6	7	8
Phs Duration (G+Y+Rc), s	7.3	39.7	7.6	15.5	10.4	36.6	4.9	18.1
Change Period (Y+Rc), s	4.6	5.1	4.6	5.1	4.6	5.1	4.6	5.1
Max Green Setting (Gmax), s	5.0	34.6	6.8	34.2	8.7	30.9	5.0	36.0
Max Q Clear Time (g_c+I1), s	3.6	3.9	3.8	6.1	6.5	2.8	2.1	4.6
Green Ext Time (p_c), s	0.0	1.4	0.0	1.0	0.0	0.5	0.0	0.5

Intersection Summary	
HCM 6th Ctrl Delay	24.1
HCM 6th LOS	C



Movement	EBL	EBT	EBR	WBL	WBT	WBR	NBL	NBT	NBR	SBL	SBT	SBR
Lane Configurations												
Traffic Volume (veh/h)	212	77	142	71	70	324	145	550	58	416	605	158
Future Volume (veh/h)	212	77	142	71	70	324	145	550	58	416	605	158
Initial Q (Qb), veh	0	0	0	0	0	0	0	0	0	0	0	0
Ped-Bike Adj(A_pbT)	1.00		0.96	1.00		0.97	1.00		0.96	1.00		0.97
Parking Bus, Adj	1.00	1.00	1.00	1.00	1.00	1.00	1.00	1.00	1.00	1.00	1.00	1.00
Work Zone On Approach		No			No			No			No	
Adj Sat Flow, veh/h/ln	1870	1870	1870	1870	1870	1870	1870	1870	1870	1870	1870	1870
Adj Flow Rate, veh/h	238	87	160	96	95	438	196	743	78	489	712	186
Peak Hour Factor	0.89	0.89	0.89	0.74	0.74	0.74	0.74	0.74	0.74	0.85	0.85	0.85
Percent Heavy Veh, %	2	2	2	2	2	2	2	2	2	2	2	2
Cap, veh/h	306	321	261	446	468	651	217	713	75	300	753	197
Arrive On Green	0.17	0.17	0.17	0.25	0.25	0.25	0.12	0.22	0.22	0.17	0.27	0.27
Sat Flow, veh/h	1781	1870	1519	1781	1870	1534	1781	3232	339	1781	2767	723
Grp Volume(v), veh/h	238	87	160	96	95	438	196	408	413	489	457	441
Grp Sat Flow(s),veh/h/ln	1781	1870	1519	1781	1870	1534	1781	1777	1795	1781	1777	1713
Q Serve(g_s), s	17.9	5.7	13.7	6.0	5.6	32.6	15.2	30.9	30.9	23.6	35.3	35.3
Cycle Q Clear(g_c), s	17.9	5.7	13.7	6.0	5.6	32.6	15.2	30.9	30.9	23.6	35.3	35.3
Prop In Lane	1.00		1.00	1.00		1.00	1.00		0.19	1.00		0.42
Lane Grp Cap(c), veh/h	306	321	261	446	468	651	217	392	396	300	483	466
V/C Ratio(X)	0.78	0.27	0.61	0.22	0.20	0.67	0.90	1.04	1.04	1.63	0.95	0.95
Avail Cap(c_a), veh/h	420	441	358	458	481	661	217	392	396	300	486	468
HCM Platoon Ratio	1.00	1.00	1.00	1.00	1.00	1.00	1.00	1.00	1.00	1.00	1.00	1.00
Upstream Filter(I)	1.00	1.00	1.00	1.00	1.00	1.00	1.00	1.00	1.00	1.00	1.00	1.00
Uniform Delay (d), s/veh	55.5	50.4	53.7	41.6	41.5	33.1	60.7	54.6	54.6	58.3	50.0	50.0
Incr Delay (d2), s/veh	7.7	0.6	3.3	0.1	0.1	2.1	34.8	56.7	56.7	298.1	29.0	29.7
Initial Q Delay(d3),s/veh	0.0	0.0	0.0	0.0	0.0	0.0	0.0	0.0	0.0	0.0	0.0	0.0
%ile BackOfQ(50%),veh/ln	8.6	2.7	5.4	2.6	2.6	12.2	8.9	19.7	19.9	35.3	19.3	18.7
Unsig. Movement Delay, s/veh												
LnGrp Delay(d),s/veh	63.2	51.1	57.0	41.7	41.6	35.3	95.4	111.3	111.3	356.4	79.0	79.7
LnGrp LOS	E	D	E	D	D	D	F	F	F	F	E	E
Approach Vol, veh/h		485			629			1017			1387	
Approach Delay, s/veh		59.0			37.2			108.3			177.0	
Approach LOS		E			D			F			F	

Timer - Assigned Phs	1	2		4	5	6		8
Phs Duration (G+Y+Rc), s	21.8	45.4		41.4	29.0	38.2		31.4
Change Period (Y+Rc), s	4.7	* 7.3		6.4	5.4	7.3		7.4
Max Green Setting (Gmax), s	17.1	* 38		36.0	23.6	30.9		33.0
Max Q Clear Time (g_c+I1), s	17.9	37.3		34.6	25.6	32.9		19.9
Green Ext Time (p_c), s	0.0	0.8		0.3	0.0	0.0		2.2

Intersection Summary	
HCM 6th Ctrl Delay	115.9
HCM 6th LOS	F

Notes

* HCM 6th computational engine requires equal clearance times for the phases crossing the barrier.

Intersection	
Int Delay, s/veh	0.5

Movement	EBL	EBR	NBL	NBT	SBT	SBR
Lane Configurations						
Traffic Vol, veh/h	7	146	60	410	521	7
Future Vol, veh/h	7	146	60	410	521	7
Conflicting Peds, #/hr	10	10	10	0	0	10
Sign Control	Free	Free	Free	Free	Stop	Stop
RT Channelized	-	None	-	None	-	None
Storage Length	0	-	-	-	-	-
Veh in Median Storage, #	2	-	-	0	0	-
Grade, %	0	-	-	0	0	-
Peak Hour Factor	85	85	85	85	73	73
Heavy Vehicles, %	2	2	2	2	2	2
Mvmt Flow	8	172	71	482	714	10

Major/Minor	Major1		Minor2	
Conflicting Flow All	10	0	634	20
Stage 1	-	-	10	-
Stage 2	-	-	624	-
Critical Hdwy	4.14	-	6.54	6.94
Critical Hdwy Stg 1	-	-	-	-
Critical Hdwy Stg 2	-	-	5.54	-
Follow-up Hdwy	2.22	-	4.02	3.32
Pot Cap-1 Maneuver	1608	-	~ 395	1053
Stage 1	-	-	-	-
Stage 2	-	-	~ 476	-
Platoon blocked, %		-		
Mov Cap-1 Maneuver	1593	-	0	1033
Mov Cap-2 Maneuver	-	-	0	-
Stage 1	-	-	0	-
Stage 2	-	-	0	-

Approach	NB	SB
HCM Control Delay, s	1.1	
HCM LOS		-

Minor Lane/Major Mvmt	NBL	NBT	SBLn1	SBLn2
Capacity (veh/h)	1593	-	-	1033
HCM Lane V/C Ratio	0.044	-	-	0.355
HCM Control Delay (s)	7.4	0.2	-	10.4
HCM Lane LOS	A	A	-	B
HCM 95th %tile Q(veh)	0.1	-	-	1.6

Notes			
~: Volume exceeds capacity	$: Delay exceeds 300s	+: Computation Not Defined	*: All major volume in platoon



Movement	WBL	WBR	NBT	NBR	SBL	SBT
Lane Configurations						
Traffic Volume (veh/h)	108	240	326	62	219	562
Future Volume (veh/h)	108	240	326	62	219	562
Initial Q (Qb), veh	0	0	0	0	0	0
Ped-Bike Adj(A_pbT)	1.00	1.00		0.95	1.00	
Parking Bus, Adj	1.00	1.00	1.00	1.00	1.00	1.00
Work Zone On Approach	No		No			No
Adj Sat Flow, veh/h/ln	1870	1870	1870	1870	1870	1870
Adj Flow Rate, veh/h	200	444	354	67	235	604
Peak Hour Factor	0.54	0.54	0.92	0.92	0.93	0.93
Percent Heavy Veh, %	2	2	2	2	2	2
Cap, veh/h	575	512	754	141	283	897
Arrive On Green	0.32	0.32	0.25	0.25	0.16	0.48
Sat Flow, veh/h	1781	1585	3052	552	1781	1870
Grp Volume(v), veh/h	200	444	211	210	235	604
Grp Sat Flow(s),veh/h/ln	1781	1585	1777	1734	1781	1870
Q Serve(g_s), s	6.1	18.7	7.1	7.3	9.1	17.6
Cycle Q Clear(g_c), s	6.1	18.7	7.1	7.3	9.1	17.6
Prop In Lane	1.00	1.00		0.32	1.00	
Lane Grp Cap(c), veh/h	575	512	453	442	283	897
V/C Ratio(X)	0.35	0.87	0.47	0.48	0.83	0.67
Avail Cap(c_a), veh/h	1350	1201	1006	982	936	2203
HCM Platoon Ratio	1.00	1.00	1.00	1.00	1.00	1.00
Upstream Filter(I)	1.00	1.00	1.00	1.00	1.00	1.00
Uniform Delay (d), s/veh	18.3	22.6	22.4	22.4	28.9	14.2
Incr Delay (d2), s/veh	0.4	4.6	2.7	2.9	2.4	3.2
Initial Q Delay(d3),s/veh	0.0	0.0	0.0	0.0	0.0	0.0
%ile BackOfQ(50%),veh/ln	2.3	15.3	3.1	3.1	3.8	7.0
Unsig. Movement Delay, s/veh						
LnGrp Delay(d),s/veh	18.7	27.2	25.1	25.3	31.4	17.4
LnGrp LOS	B	C	C	C	C	B
Approach Vol, veh/h	644		421			839
Approach Delay, s/veh	24.5		25.2			21.3
Approach LOS	C		C			C

Timer - Assigned Phs		2		4	5	6
Phs Duration (G+Y+Rc), s		41.9		29.1	16.0	25.9
Change Period (Y+Rc), s		* 7.8		6.2	* 4.7	7.8
Max Green Setting (Gmax), s		* 84		53.8	* 37	40.2
Max Q Clear Time (g_c+I1), s		19.6		20.7	11.1	9.3
Green Ext Time (p_c), s		13.2		2.2	0.3	6.3

Intersection Summary	
HCM 6th Ctrl Delay	23.3
HCM 6th LOS	C

Notes

* HCM 6th computational engine requires equal clearance times for the phases crossing the barrier.

Intersection	
Int Delay, s/veh	2.6

Movement	EBT	EBR	WBL	WBT	NBL	NBR
Lane Configurations						
Traffic Vol, veh/h	326	62	79	219	28	62
Future Vol, veh/h	326	62	79	219	28	62
Conflicting Peds, #/hr	0	10	10	0	10	10
Sign Control	Free	Free	Free	Free	Stop	Stop
RT Channelized	-	None	-	None	-	None
Storage Length	-	-	-	-	0	-
Veh in Median Storage, #	0	-	-	0	0	-
Grade, %	0	-	-	0	0	-
Peak Hour Factor	67	67	91	91	86	86
Heavy Vehicles, %	2	2	2	2	2	2
Mvmt Flow	487	93	87	241	33	72

Major/Minor	Major1		Major2		Minor1	
Conflicting Flow All	0	0	590	0	969	554
Stage 1	-	-	-	-	544	-
Stage 2	-	-	-	-	425	-
Critical Hdwy	-	-	4.12	-	6.42	6.22
Critical Hdwy Stg 1	-	-	-	-	5.42	-
Critical Hdwy Stg 2	-	-	-	-	5.42	-
Follow-up Hdwy	-	-	2.218	-	3.518	3.318
Pot Cap-1 Maneuver	-	-	985	-	281	532
Stage 1	-	-	-	-	582	-
Stage 2	-	-	-	-	659	-
Platoon blocked, %	-	-		-		
Mov Cap-1 Maneuver	-	-	976	-	247	522
Mov Cap-2 Maneuver	-	-	-	-	247	-
Stage 1	-	-	-	-	576	-
Stage 2	-	-	-	-	585	-

Approach	EB	WB	NB
HCM Control Delay, s	0	2.4	17.7
HCM LOS			C

Minor Lane/Major Mvmt	NBLn1	EBT	EBR	WBL	WBT
Capacity (veh/h)	388	-	-	976	-
HCM Lane V/C Ratio	0.27	-	-	0.089	-
HCM Control Delay (s)	17.7	-	-	9	0
HCM Lane LOS	C	-	-	A	A
HCM 95th %tile Q(veh)	1.1	-	-	0.3	-

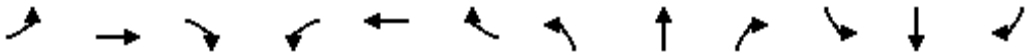

Movement	EBL	EBT	EBR	WBL	WBT	WBR	NBL	NBT	NBR	SBL	SBT	SBR
Lane Configurations												
Traffic Volume (veh/h)	106	194	87	41	106	188	96	407	35	276	521	95
Future Volume (veh/h)	106	194	87	41	106	188	96	407	35	276	521	95
Initial Q (Qb), veh	0	0	0	0	0	0	0	0	0	0	0	0
Ped-Bike Adj(A_pbT)	1.00		0.97	1.00		1.00	1.00		0.96	1.00		0.97
Parking Bus, Adj	1.00	1.00	1.00	1.00	1.00	1.00	1.00	1.00	1.00	1.00	1.00	1.00
Work Zone On Approach		No			No			No			No	
Adj Sat Flow, veh/h/ln	1870	1870	1870	1870	1870	1870	1870	1870	1870	1870	1870	1870
Adj Flow Rate, veh/h	156	285	128	46	118	0	98	415	36	294	554	101
Peak Hour Factor	0.68	0.68	0.68	0.90	0.90	0.90	0.98	0.98	0.98	0.94	0.94	0.94
Percent Heavy Veh, %	2	2	2	2	2	2	2	2	2	2	2	2
Cap, veh/h	200	591	257	76	632		129	777	334	354	1033	188
Arrive On Green	0.11	0.25	0.25	0.04	0.18	0.00	0.07	0.22	0.22	0.20	0.35	0.35
Sat Flow, veh/h	1781	2382	1037	1781	3554	1585	1781	3554	1529	1781	2989	543
Grp Volume(v), veh/h	156	210	203	46	118	0	98	415	36	294	328	327
Grp Sat Flow(s),veh/h/ln	1781	1777	1642	1781	1777	1585	1781	1777	1529	1781	1777	1755
Q Serve(g_s), s	5.9	7.0	7.3	1.7	1.9	0.0	3.7	7.1	1.3	10.9	10.2	10.3
Cycle Q Clear(g_c), s	5.9	7.0	7.3	1.7	1.9	0.0	3.7	7.1	1.3	10.9	10.2	10.3
Prop In Lane	1.00		0.63	1.00		1.00	1.00		1.00	1.00		0.31
Lane Grp Cap(c), veh/h	200	441	407	76	632		129	777	334	354	614	606
V/C Ratio(X)	0.78	0.48	0.50	0.61	0.19		0.76	0.53	0.11	0.83	0.54	0.54
Avail Cap(c_a), veh/h	528	1133	1047	269	1749		450	1816	782	1045	1502	1483
HCM Platoon Ratio	1.00	1.00	1.00	1.00	1.00	1.00	1.00	1.00	1.00	1.00	1.00	1.00
Upstream Filter(I)	1.00	1.00	1.00	1.00	1.00	0.00	1.00	1.00	1.00	1.00	1.00	1.00
Uniform Delay (d), s/veh	29.7	22.1	22.2	32.4	24.1	0.0	31.4	23.8	21.5	26.5	18.1	18.1
Incr Delay (d2), s/veh	6.4	0.8	0.9	7.6	0.1	0.0	9.0	0.6	0.1	5.0	0.7	0.7
Initial Q Delay(d3),s/veh	0.0	0.0	0.0	0.0	0.0	0.0	0.0	0.0	0.0	0.0	0.0	0.0
%ile BackOfQ(50%),veh/ln	2.7	2.7	2.7	0.9	0.8	0.0	1.8	2.8	0.4	4.7	3.8	3.8
Unsig. Movement Delay, s/veh												
LnGrp Delay(d),s/veh	36.1	22.9	23.2	40.0	24.2	0.0	40.3	24.4	21.7	31.5	18.8	18.9
LnGrp LOS	D	C	C	D	C		D	C	C	C	B	B
Approach Vol, veh/h		569			164	A		549			949	
Approach Delay, s/veh		26.6			28.6			27.0			22.8	
Approach LOS		C			C			C			C	

Timer - Assigned Phs	1	2	3	4	5	6	7	8
Phs Duration (G+Y+Rc), s	18.3	20.9	7.5	22.2	9.6	29.6	12.4	17.4
Change Period (Y+Rc), s	4.6	5.8	4.6	5.1	4.6	5.8	4.6	5.1
Max Green Setting (Gmax), s	40.4	35.2	10.4	43.9	17.4	58.2	20.4	33.9
Max Q Clear Time (g_c+I1), s	12.9	9.1	3.7	9.3	5.7	12.3	7.9	3.9
Green Ext Time (p_c), s	0.8	2.7	0.0	2.5	0.1	4.2	0.3	0.6

Intersection Summary	
HCM 6th Ctrl Delay	25.2
HCM 6th LOS	C

Notes

Unsignalized Delay for [WBR] is excluded from calculations of the approach delay and intersection delay.

Intersection	
Intersection Delay, s/veh	10.4
Intersection LOS	B

Movement	EBL	EBT	EBR	WBL	WBT	WBR	NBL	NBT	NBR	SBL	SBT	SBR
Lane Configurations												
Traffic Vol, veh/h	36	100	8	10	90	45	9	37	35	36	31	34
Future Vol, veh/h	36	100	8	10	90	45	9	37	35	36	31	34
Peak Hour Factor	0.74	0.74	0.74	0.79	0.79	0.79	0.45	0.45	0.45	0.87	0.87	0.87
Heavy Vehicles, %	2	2	2	2	2	2	2	2	2	2	2	2
Mvmt Flow	49	135	11	13	114	57	20	82	78	41	36	39
Number of Lanes	0	1	1	0	1	0	0	1	0	0	1	1

Approach	EB	WB	NB	SB
Opposing Approach	WB	EB	SB	NB
Opposing Lanes	1	2	2	1
Conflicting Approach Left	SB	NB	EB	WB
Conflicting Lanes Left	2	1	2	1
Conflicting Approach Right	NB	SB	WB	EB
Conflicting Lanes Right	1	2	1	2
HCM Control Delay	10.6	10.7	10.7	9.3
HCM LOS	B	B	B	A

Lane	NBLn1	EBLn1	EBLn2	WBLn1	SBLn1	SBLn2
Vol Left, %	11%	26%	0%	7%	54%	0%
Vol Thru, %	46%	74%	0%	62%	46%	0%
Vol Right, %	43%	0%	100%	31%	0%	100%
Sign Control	Stop	Stop	Stop	Stop	Stop	Stop
Traffic Vol by Lane	81	136	8	145	67	34
LT Vol	9	36	0	10	36	0
Through Vol	37	100	0	90	31	0
RT Vol	35	0	8	45	0	34
Lane Flow Rate	180	184	11	184	77	39
Geometry Grp	6	7	7	6	7	7
Degree of Util (X)	0.274	0.29	0.015	0.283	0.132	0.056
Departure Headway (Hd)	5.594	5.775	4.934	5.543	6.148	5.168
Convergence, Y/N	Yes	Yes	Yes	Yes	Yes	Yes
Cap	646	627	730	652	585	696
Service Time	3.594	3.475	2.634	3.543	3.86	2.88
HCM Lane V/C Ratio	0.279	0.293	0.015	0.282	0.132	0.056
HCM Control Delay	10.7	10.8	7.7	10.7	9.8	8.2
HCM Lane LOS	B	B	A	B	A	A
HCM 95th-tile Q	1.1	1.2	0	1.2	0.5	0.2

Intersection	
Intersection Delay, s/veh	11.9
Intersection LOS	B

Movement	EBL	EBT	EBR	WBL	WBT	WBR	NBL	NBT	NBR	SBL	SBT	SBR
Lane Configurations												
Traffic Vol, veh/h	4	102	22	2	94	133	20	70	1	88	115	8
Future Vol, veh/h	4	102	22	2	94	133	20	70	1	88	115	8
Peak Hour Factor	0.68	0.68	0.68	0.66	0.66	0.66	0.70	0.70	0.70	0.84	0.84	0.84
Heavy Vehicles, %	2	2	2	2	2	2	2	2	2	2	2	2
Mvmt Flow	6	150	32	3	142	202	29	100	1	105	137	10
Number of Lanes	0	1	0	0	1	0	0	1	0	0	1	0

Approach	EB	WB	NB	SB
Opposing Approach	WB	EB	SB	NB
Opposing Lanes	1	1	1	1
Conflicting Approach Left	SB	NB	EB	WB
Conflicting Lanes Left	1	1	1	1
Conflicting Approach Right	NB	SB	WB	EB
Conflicting Lanes Right	1	1	1	1
HCM Control Delay	10.7	12.7	10.5	12.3
HCM LOS	B	B	B	B

Lane	NBLn1	EBLn1	WBLn1	SBLn1
Vol Left, %	22%	3%	1%	42%
Vol Thru, %	77%	80%	41%	55%
Vol Right, %	1%	17%	58%	4%
Sign Control	Stop	Stop	Stop	Stop
Traffic Vol by Lane	91	128	229	211
LT Vol	20	4	2	88
Through Vol	70	102	94	115
RT Vol	1	22	133	8
Lane Flow Rate	130	188	347	251
Geometry Grp	1	1	1	1
Degree of Util (X)	0.211	0.286	0.482	0.393
Departure Headway (Hd)	5.837	5.476	5.001	5.632
Convergence, Y/N	Yes	Yes	Yes	Yes
Cap	612	653	718	638
Service Time	3.894	3.529	3.046	3.681
HCM Lane V/C Ratio	0.212	0.288	0.483	0.393
HCM Control Delay	10.5	10.7	12.7	12.3
HCM Lane LOS	B	B	B	B
HCM 95th-tile Q	0.8	1.2	2.6	1.9

Intersection	
Intersection Delay, s/veh	17.2
Intersection LOS	C

Movement	EBL	EBT	EBR	WBL	WBT	WBR	NBL	NBT	NBR	SBL	SBT	SBR
Lane Configurations												
Traffic Vol, veh/h	80	210	12	16	140	69	34	111	45	129	166	52
Future Vol, veh/h	80	210	12	16	140	69	34	111	45	129	166	52
Peak Hour Factor	0.86	0.86	0.86	0.86	0.86	0.86	0.65	0.65	0.65	0.85	0.85	0.85
Heavy Vehicles, %	2	2	2	2	2	2	2	2	2	2	2	2
Mvmt Flow	93	244	14	19	163	80	52	171	69	152	195	61
Number of Lanes	1	1	0	0	1	0	1	1	0	1	1	0

Approach	EB	WB	NB	SB
Opposing Approach	WB	EB	SB	NB
Opposing Lanes	1	2	2	2
Conflicting Approach Left	SB	NB	EB	WB
Conflicting Lanes Left	2	2	2	1
Conflicting Approach Right	NB	SB	WB	EB
Conflicting Lanes Right	2	2	1	2
HCM Control Delay	17.1	19.5	16.4	16.5
HCM LOS	C	C	C	C

Lane	NBLn1	NBLn2	EBLn1	EBLn2	WBLn1	SBLn1	SBLn2
Vol Left, %	100%	0%	100%	0%	7%	100%	0%
Vol Thru, %	0%	71%	0%	95%	62%	0%	76%
Vol Right, %	0%	29%	0%	5%	31%	0%	24%
Sign Control	Stop	Stop	Stop	Stop	Stop	Stop	Stop
Traffic Vol by Lane	34	156	80	222	225	129	218
LT Vol	34	0	80	0	16	129	0
Through Vol	0	111	0	210	140	0	166
RT Vol	0	45	0	12	69	0	52
Lane Flow Rate	52	240	93	258	262	152	256
Geometry Grp	7	7	7	7	6	7	7
Degree of Util (X)	0.118	0.495	0.207	0.536	0.548	0.335	0.516
Departure Headway (Hd)	8.153	7.429	8.022	7.47	7.54	7.935	7.249
Convergence, Y/N	Yes	Yes	Yes	Yes	Yes	Yes	Yes
Cap	438	482	447	483	476	452	495
Service Time	5.926	5.201	5.79	5.238	5.613	5.704	5.018
HCM Lane V/C Ratio	0.119	0.498	0.208	0.534	0.55	0.336	0.517
HCM Control Delay	12	17.3	12.9	18.6	19.5	14.7	17.6
HCM Lane LOS	B	C	B	C	C	B	C
HCM 95th-tile Q	0.4	2.7	0.8	3.1	3.2	1.5	2.9



Movement	EBL	EBT	EBR	WBL	WBT	WBR	NBL	NBT	NBR	SBL	SBT	SBR
Lane Configurations												
Traffic Volume (veh/h)	35	255	92	1	135	99	53	146	3	146	344	39
Future Volume (veh/h)	35	255	92	1	135	99	53	146	3	146	344	39
Initial Q (Qb), veh	0	0	0	0	0	0	0	0	0	0	0	0
Ped-Bike Adj(A_pbT)	0.99		0.96	1.00		0.96	1.00		0.95	1.00		0.96
Parking Bus, Adj	1.00	1.00	1.00	1.00	1.00	1.00	1.00	1.00	1.00	1.00	1.00	1.00
Work Zone On Approach		No			No			No			No	
Adj Sat Flow, veh/h/ln	1870	1870	1870	1870	1870	1870	1870	1870	1870	1870	1870	1870
Adj Flow Rate, veh/h	47	345	124	1	142	104	62	172	4	168	395	45
Peak Hour Factor	0.74	0.74	0.74	0.95	0.95	0.95	0.85	0.85	0.85	0.87	0.87	0.87
Percent Heavy Veh, %	2	2	2	2	2	2	2	2	2	2	2	2
Cap, veh/h	82	419	144	43	345	251	113	537	12	206	569	65
Arrive On Green	0.35	0.35	0.35	0.35	0.35	0.35	0.06	0.30	0.30	0.12	0.35	0.35
Sat Flow, veh/h	102	1195	410	1	984	716	1781	1818	42	1781	1640	187
Grp Volume(v), veh/h	516	0	0	247	0	0	62	0	176	168	0	440
Grp Sat Flow(s),veh/h/ln	1707	0	0	1701	0	0	1781	0	1860	1781	0	1826
Q Serve(g_s), s	13.7	0.0	0.0	0.0	0.0	0.0	2.8	0.0	6.2	7.8	0.0	17.5
Cycle Q Clear(g_c), s	23.6	0.0	0.0	9.3	0.0	0.0	2.8	0.0	6.2	7.8	0.0	17.5
Prop In Lane	0.09		0.24	0.00		0.42	1.00		0.02	1.00		0.10
Lane Grp Cap(c), veh/h	645	0	0	640	0	0	113	0	550	206	0	634
V/C Ratio(X)	0.80	0.00	0.00	0.39	0.00	0.00	0.55	0.00	0.32	0.82	0.00	0.69
Avail Cap(c_a), veh/h	1260	0	0	1262	0	0	196	0	1070	450	0	1302
HCM Platoon Ratio	1.00	1.00	1.00	1.00	1.00	1.00	1.00	1.00	1.00	1.00	1.00	1.00
Upstream Filter(I)	1.00	0.00	0.00	1.00	0.00	0.00	1.00	0.00	1.00	1.00	0.00	1.00
Uniform Delay (d), s/veh	25.3	0.0	0.0	20.8	0.0	0.0	38.3	0.0	23.1	36.4	0.0	23.7
Incr Delay (d2), s/veh	2.3	0.0	0.0	0.4	0.0	0.0	1.5	0.0	1.5	3.0	0.0	6.2
Initial Q Delay(d3),s/veh	0.0	0.0	0.0	0.0	0.0	0.0	0.0	0.0	0.0	0.0	0.0	0.0
%ile BackOfQ(50%),veh/ln	9.5	0.0	0.0	3.6	0.0	0.0	1.2	0.0	2.8	3.4	0.0	8.0
Unsig. Movement Delay, s/veh												
LnGrp Delay(d),s/veh	27.6	0.0	0.0	21.2	0.0	0.0	39.8	0.0	24.6	39.4	0.0	29.8
LnGrp LOS	C	A	A	C	A	A	D	A	C	D	A	C
Approach Vol, veh/h		516			247			238			608	
Approach Delay, s/veh		27.6			21.2			28.6			32.5	
Approach LOS		C			C			C			C	

Timer - Assigned Phs	1	2		4	5	6		8
Phs Duration (G+Y+Rc), s	10.1	37.2		37.1	14.4	32.8		37.1
Change Period (Y+Rc), s	* 4.7	7.9		7.5	* 4.7	* 7.9		7.5
Max Green Setting (Gmax), s	* 9.3	60.1		60.5	* 21	* 49		60.5
Max Q Clear Time (g_c+I1), s	11.8	19.5		11.3	9.8	8.2		25.6
Green Ext Time (p_c), s	0.0	9.8		1.7	0.2	3.3		4.0

Intersection Summary	
HCM 6th Ctrl Delay	28.6
HCM 6th LOS	C

Notes

* HCM 6th computational engine requires equal clearance times for the phases crossing the barrier.

Intersection	
Int Delay, s/veh	15.8

Movement	EBL	EBT	EBR	WBL	WBT	WBR	NBL	NBT	NBR	SBL	SBT	SBR
Lane Configurations		⇕			⇕			⇕			⇕	
Traffic Vol, veh/h	14	291	100	84	168	35	63	33	53	57	53	10
Future Vol, veh/h	14	291	100	84	168	35	63	33	53	57	53	10
Conflicting Peds, #/hr	10	0	10	10	0	10	10	0	10	10	0	10
Sign Control	Free	Free	Free	Free	Free	Free	Stop	Stop	Stop	Stop	Stop	Stop
RT Channelized	-	-	None	-	-	None	-	-	None	-	-	None
Storage Length	-	-	-	-	-	-	-	-	-	-	-	-
Veh in Median Storage, #	-	0	-	-	0	-	-	0	-	-	0	-
Grade, %	-	0	-	-	0	-	-	0	-	-	0	-
Peak Hour Factor	82	82	82	95	95	95	92	92	92	68	68	68
Heavy Vehicles, %	2	2	2	2	2	2	2	2	2	2	2	2
Mvmt Flow	17	355	122	88	177	37	68	36	58	84	78	15

Major/Minor	Major1			Major2			Minor1			Minor2		
Conflicting Flow All	224	0	0	487	0	0	888	860	436	889	903	216
Stage 1	-	-	-	-	-	-	460	460	-	382	382	-
Stage 2	-	-	-	-	-	-	428	400	-	507	521	-
Critical Hdwy	4.12	-	-	4.12	-	-	7.12	6.52	6.22	7.12	6.52	6.22
Critical Hdwy Stg 1	-	-	-	-	-	-	6.12	5.52	-	6.12	5.52	-
Critical Hdwy Stg 2	-	-	-	-	-	-	6.12	5.52	-	6.12	5.52	-
Follow-up Hdwy	2.218	-	-	2.218	-	-	3.518	4.018	3.318	3.518	4.018	3.318
Pot Cap-1 Maneuver	1345	-	-	1076	-	-	264	294	620	264	277	824
Stage 1	-	-	-	-	-	-	581	566	-	640	613	-
Stage 2	-	-	-	-	-	-	605	602	-	548	532	-
Platoon blocked, %		-	-		-	-						
Mov Cap-1 Maneuver	1332	-	-	1066	-	-	176	256	608	192	242	808
Mov Cap-2 Maneuver	-	-	-	-	-	-	176	256	-	192	242	-
Stage 1	-	-	-	-	-	-	565	550	-	623	550	-
Stage 2	-	-	-	-	-	-	457	540	-	451	517	-

Approach	EB	WB	NB	SB
HCM Control Delay, s	0.3	2.5	39.3	60.5
HCM LOS			E	F

Minor Lane/Major Mvmt	NBLn1	EBL	EBT	EBR	WBL	WBT	WBR	SBLn1
Capacity (veh/h)	260	1332	-	-	1066	-	-	227
HCM Lane V/C Ratio	0.623	0.013	-	-	0.083	-	-	0.777
HCM Control Delay (s)	39.3	7.7	0	-	8.7	0	-	60.5
HCM Lane LOS	E	A	A	-	A	A	-	F
HCM 95th %tile Q(veh)	3.8	0	-	-	0.3	-	-	5.6

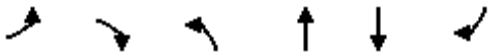

Movement	EBL	EBR	NBL	NBT	SBT	SBR
Lane Configurations						
Traffic Volume (veh/h)	133	272	143	396	529	134
Future Volume (veh/h)	133	272	143	396	529	134
Initial Q (Qb), veh	0	0	0	0	0	0
Ped-Bike Adj(A_pbT)	1.00	1.00	1.00			0.96
Parking Bus, Adj	1.00	1.00	1.00	1.00	1.00	1.00
Work Zone On Approach	No			No	No	
Adj Sat Flow, veh/h/ln	1870	1870	1870	1870	1870	1870
Adj Flow Rate, veh/h	171	349	154	426	569	144
Peak Hour Factor	0.78	0.78	0.93	0.93	0.93	0.93
Percent Heavy Veh, %	2	2	2	2	2	2
Cap, veh/h	400	533	199	1172	658	167
Arrive On Green	0.22	0.22	0.11	0.63	0.46	0.46
Sat Flow, veh/h	1781	1585	1781	1870	1427	361
Grp Volume(v), veh/h	171	349	154	426	0	713
Grp Sat Flow(s),veh/h/ln	1781	1585	1781	1870	0	1788
Q Serve(g_s), s	6.1	13.9	6.2	8.2	0.0	26.5
Cycle Q Clear(g_c), s	6.1	13.9	6.2	8.2	0.0	26.5
Prop In Lane	1.00	1.00	1.00			0.20
Lane Grp Cap(c), veh/h	400	533	199	1172	0	825
V/C Ratio(X)	0.43	0.65	0.78	0.36	0.00	0.86
Avail Cap(c_a), veh/h	481	604	817	3003	0	1954
HCM Platoon Ratio	1.00	1.00	1.00	1.00	1.00	1.00
Upstream Filter(I)	1.00	1.00	1.00	1.00	0.00	1.00
Uniform Delay (d), s/veh	24.6	20.9	32.0	6.7	0.0	17.9
Incr Delay (d2), s/veh	0.7	2.1	6.4	0.2	0.0	2.9
Initial Q Delay(d3),s/veh	0.0	0.0	0.0	0.0	0.0	0.0
%ile BackOfQ(50%),veh/ln	2.6	0.3	2.9	2.5	0.0	9.8
Unsig. Movement Delay, s/veh						
LnGrp Delay(d),s/veh	25.4	23.1	38.4	6.9	0.0	20.7
LnGrp LOS	C	C	D	A	A	C
Approach Vol, veh/h	520			580	713	
Approach Delay, s/veh	23.8			15.2	20.7	
Approach LOS	C			B	C	

Timer - Assigned Phs		2		4	5	6
Phs Duration (G+Y+Rc), s		52.5		21.7	12.3	40.2
Change Period (Y+Rc), s		6.0		5.0	4.0	6.0
Max Green Setting (Gmax), s		119.0		20.0	34.0	81.0
Max Q Clear Time (g_c+I1), s		10.2		15.9	8.2	28.5
Green Ext Time (p_c), s		2.7		0.8	0.4	5.7

Intersection Summary	
HCM 6th Ctrl Delay	19.9
HCM 6th LOS	B



Movement	WBL	WBR	NBT	NBR	SBL	SBT
Lane Configurations						
Traffic Volume (veh/h)	93	48	461	67	39	571
Future Volume (veh/h)	93	48	461	67	39	571
Initial Q (Qb), veh	0	0	0	0	0	0
Ped-Bike Adj(A_pbT)	1.00	1.00		0.96	1.00	
Parking Bus, Adj	1.00	1.00	1.00	1.00	1.00	1.00
Work Zone On Approach	No		No			No
Adj Sat Flow, veh/h/ln	1870	1870	1870	1870	1870	1870
Adj Flow Rate, veh/h	112	58	507	74	41	601
Peak Hour Factor	0.83	0.83	0.91	0.91	0.95	0.95
Percent Heavy Veh, %	2	2	2	2	2	2
Cap, veh/h	199	251	688	100	83	1102
Arrive On Green	0.11	0.11	0.43	0.43	0.05	0.59
Sat Flow, veh/h	1781	1585	1586	231	1781	1870
Grp Volume(v), veh/h	112	58	0	581	41	601
Grp Sat Flow(s),veh/h/ln	1781	1585	0	1817	1781	1870
Q Serve(g_s), s	2.2	1.2	0.0	9.8	0.8	7.2
Cycle Q Clear(g_c), s	2.2	1.2	0.0	9.8	0.8	7.2
Prop In Lane	1.00	1.00		0.13	1.00	
Lane Grp Cap(c), veh/h	199	251	0	789	83	1102
V/C Ratio(X)	0.56	0.23	0.00	0.74	0.49	0.55
Avail Cap(c_a), veh/h	726	720	0	5036	871	6301
HCM Platoon Ratio	1.00	1.00	1.00	1.00	1.00	1.00
Upstream Filter(I)	1.00	1.00	0.00	1.00	1.00	1.00
Uniform Delay (d), s/veh	15.5	13.5	0.0	8.7	17.1	4.6
Incr Delay (d2), s/veh	2.5	0.5	0.0	1.4	4.5	0.4
Initial Q Delay(d3),s/veh	0.0	0.0	0.0	0.0	0.0	0.0
%ile BackOfQ(50%),veh/ln	0.9	0.4	0.0	2.4	0.4	0.9
Unsig. Movement Delay, s/veh						
LnGrp Delay(d),s/veh	18.0	14.0	0.0	10.0	21.6	5.0
LnGrp LOS	B	B	A	B	C	A
Approach Vol, veh/h	170		581			642
Approach Delay, s/veh	16.6		10.0			6.1
Approach LOS	B		B			A

Timer - Assigned Phs	1	2			6	8
Phs Duration (G+Y+Rc), s	5.7	22.0			27.7	9.1
Change Period (Y+Rc), s	4.0	6.0			6.0	5.0
Max Green Setting (Gmax), s	18.0	102.0			124.0	15.0
Max Q Clear Time (g_c+I1), s	2.8	11.8			9.2	4.2
Green Ext Time (p_c), s	0.0	4.2			4.3	0.3

Intersection Summary	
HCM 6th Ctrl Delay	9.0
HCM 6th LOS	A



Movement	EBL	EBT	EBR	WBL	WBT	WBR	NBL	NBT	NBR	SBL	SBT	SBR
Lane Configurations												
Traffic Volume (veh/h)	10	99	8	33	114	149	13	6	9	232	25	13
Future Volume (veh/h)	10	99	8	33	114	149	13	6	9	232	25	13
Initial Q (Qb), veh	0	0	0	0	0	0	0	0	0	0	0	0
Ped-Bike Adj(A_pbT)	1.00		0.90	1.00		0.92	0.99		0.98	1.00		0.97
Parking Bus, Adj	1.00	1.00	1.00	1.00	1.00	1.00	1.00	1.00	1.00	1.00	1.00	1.00
Work Zone On Approach		No			No			No			No	
Adj Sat Flow, veh/h/ln	1870	1870	1870	1870	1870	1870	1870	1870	1870	1870	1870	1870
Adj Flow Rate, veh/h	11	112	9	35	123	160	25	11	17	258	28	14
Peak Hour Factor	0.88	0.88	0.88	0.93	0.93	0.93	0.53	0.53	0.53	0.90	0.90	0.90
Percent Heavy Veh, %	2	2	2	2	2	2	2	2	2	2	2	2
Cap, veh/h	16	162	13	57	201	204	456	203	289	890	693	347
Arrive On Green	0.10	0.10	0.10	0.14	0.14	0.14	0.60	0.60	0.60	0.60	0.60	0.60
Sat Flow, veh/h	152	1548	124	410	1440	1457	685	341	484	1376	1161	581
Grp Volume(v), veh/h	132	0	0	158	0	160	53	0	0	258	0	42
Grp Sat Flow(s),veh/h/ln	1824	0	0	1850	0	1457	1510	0	0	1376	0	1742
Q Serve(g_s), s	8.0	0.0	0.0	9.1	0.0	12.1	0.0	0.0	0.0	8.7	0.0	1.1
Cycle Q Clear(g_c), s	8.0	0.0	0.0	9.1	0.0	12.1	1.4	0.0	0.0	10.1	0.0	1.1
Prop In Lane	0.08		0.07	0.22		1.00	0.47		0.32	1.00		0.33
Lane Grp Cap(c), veh/h	191	0	0	259	0	204	948	0	0	890	0	1040
V/C Ratio(X)	0.69	0.00	0.00	0.61	0.00	0.79	0.06	0.00	0.00	0.29	0.00	0.04
Avail Cap(c_a), veh/h	465	0	0	569	0	448	948	0	0	890	0	1040
HCM Platoon Ratio	1.00	1.00	1.00	1.00	1.00	1.00	1.00	1.00	1.00	1.00	1.00	1.00
Upstream Filter(I)	1.00	0.00	0.00	1.00	0.00	1.00	1.00	0.00	0.00	1.00	0.00	1.00
Uniform Delay (d), s/veh	49.2	0.0	0.0	46.1	0.0	47.3	9.5	0.0	0.0	11.2	0.0	9.5
Incr Delay (d2), s/veh	1.7	0.0	0.0	0.9	0.0	2.5	0.1	0.0	0.0	0.8	0.0	0.1
Initial Q Delay(d3),s/veh	0.0	0.0	0.0	0.0	0.0	0.0	0.0	0.0	0.0	0.0	0.0	0.0
%ile BackOfQ(50%),veh/ln	3.7	0.0	0.0	4.2	0.0	4.4	0.6	0.0	0.0	3.3	0.0	0.4
Unsig. Movement Delay, s/veh												
LnGrp Delay(d),s/veh	50.8	0.0	0.0	46.9	0.0	49.9	9.6	0.0	0.0	12.0	0.0	9.5
LnGrp LOS	D	A	A	D	A	D	A	A	A	B	A	A
Approach Vol, veh/h		132			318			53			300	
Approach Delay, s/veh		50.8			48.4			9.6			11.7	
Approach LOS		D			D			A			B	

Timer - Assigned Phs	2	4	6	8
Phs Duration (G+Y+Rc), s	74.0	17.9	74.0	21.9
Change Period (Y+Rc), s	6.0	6.0	6.0	6.0
Max Green Setting (Gmax), s	68.0	29.0	68.0	35.0
Max Q Clear Time (g_c+I1), s	3.4	10.0	12.1	14.1
Green Ext Time (p_c), s	0.1	0.4	2.7	0.8

Intersection Summary	
HCM 6th Ctrl Delay	32.5
HCM 6th LOS	C



Movement	EBL	EBT	EBR	WBL	WBT	WBR	NBL	NBT	NBR	SBL	SBT	SBR
Lane Configurations												
Traffic Volume (veh/h)	38	46	263	5	35	13	186	1019	6	49	1521	75
Future Volume (veh/h)	38	46	263	5	35	13	186	1019	6	49	1521	75
Initial Q (Qb), veh	0	0	0	0	0	0	0	0	0	0	0	0
Ped-Bike Adj(A_pbT)	1.00		0.94	1.00		0.96	1.00		1.00	1.00		0.98
Parking Bus, Adj	1.00	1.00	1.00	1.00	1.00	1.00	1.00	1.00	1.00	1.00	1.00	1.00
Work Zone On Approach		No			No			No			No	
Adj Sat Flow, veh/h/ln	1870	1870	1870	1870	1870	1870	1870	1870	1870	1870	1870	1870
Adj Flow Rate, veh/h	40	49	280	6	44	16	200	1096	0	52	1618	80
Peak Hour Factor	0.94	0.94	0.94	0.79	0.79	0.79	0.93	0.93	0.93	0.94	0.94	0.94
Percent Heavy Veh, %	2	2	2	2	2	2	2	2	2	2	2	2
Cap, veh/h	108	400	790	27	315	255	283	1702	0	121	1653	817
Arrive On Green	0.06	0.21	0.21	0.02	0.17	0.17	0.08	0.48	0.00	0.07	0.47	0.47
Sat Flow, veh/h	1781	1870	2623	1781	1870	1518	3456	3647	0	1781	3554	1549
Grp Volume(v), veh/h	40	49	280	6	44	16	200	1096	0	52	1618	80
Grp Sat Flow(s),veh/h/ln	1781	1870	1311	1781	1870	1518	1728	1777	0	1781	1777	1549
Q Serve(g_s), s	2.6	2.6	10.3	0.4	2.4	1.1	6.9	28.3	0.0	3.4	54.5	3.1
Cycle Q Clear(g_c), s	2.6	2.6	10.3	0.4	2.4	1.1	6.9	28.3	0.0	3.4	54.5	3.1
Prop In Lane	1.00		1.00	1.00		1.00	1.00		0.00	1.00		1.00
Lane Grp Cap(c), veh/h	108	400	790	27	315	255	283	1702	0	121	1653	817
V/C Ratio(X)	0.37	0.12	0.35	0.22	0.14	0.06	0.71	0.64	0.00	0.43	0.98	0.10
Avail Cap(c_a), veh/h	146	706	1218	146	706	573	283	1702	0	146	1653	817
HCM Platoon Ratio	1.00	1.00	1.00	1.00	1.00	1.00	1.00	1.00	1.00	1.00	1.00	1.00
Upstream Filter(I)	1.00	1.00	1.00	1.00	1.00	1.00	1.00	1.00	0.00	1.00	1.00	1.00
Uniform Delay (d), s/veh	55.0	38.7	33.8	59.3	43.2	42.6	54.5	23.9	0.0	54.6	32.0	14.4
Incr Delay (d2), s/veh	0.8	0.3	0.6	1.5	0.4	0.2	6.7	1.9	0.0	0.9	17.7	0.2
Initial Q Delay(d3),s/veh	0.0	0.0	0.0	0.0	0.0	0.0	0.0	0.0	0.0	0.0	0.0	0.0
%ile BackOfQ(50%),veh/ln	1.2	1.2	3.3	0.2	1.2	0.4	3.1	11.3	0.0	1.5	25.0	1.2
Unsig. Movement Delay, s/veh												
LnGrp Delay(d),s/veh	55.8	39.0	34.4	60.9	43.6	42.8	61.2	25.8	0.0	55.4	49.7	14.7
LnGrp LOS	E	D	C	E	D	D	E	C	A	E	D	B
Approach Vol, veh/h		369			66			1296			1750	
Approach Delay, s/veh		37.3			45.0			31.3			48.3	
Approach LOS		D			D			C			D	

Timer - Assigned Phs	1	2	3	4	5	6	7	8
Phs Duration (G+Y+Rc), s	14.0	66.8	7.5	33.6	15.7	65.1	13.1	28.0
Change Period (Y+Rc), s	* 5.7	* 8.4	* 5.7	7.5	* 5.7	* 8.4	* 5.7	7.5
Max Green Setting (Gmax), s	* 10	* 57	* 10	46.0	* 10	* 57	* 10	46.0
Max Q Clear Time (g_c+I1), s	5.4	30.3	2.4	12.3	8.9	56.5	4.6	4.4
Green Ext Time (p_c), s	0.0	18.9	0.0	3.2	0.0	0.2	0.0	0.5

Intersection Summary	
HCM 6th Ctrl Delay	40.7
HCM 6th LOS	D

Notes

* HCM 6th computational engine requires equal clearance times for the phases crossing the barrier.

Intersection	
Int Delay, s/veh	1.5

Movement	WBL	WBR	NBT	NBR	SBL	SBT
Lane Configurations						
Traffic Vol, veh/h	13	37	166	21	58	380
Future Vol, veh/h	13	37	166	21	58	380
Conflicting Peds, #/hr	10	10	0	10	10	0
Sign Control	Stop	Stop	Free	Free	Free	Free
RT Channelized	-	None	-	None	-	None
Storage Length	0	-	-	-	-	-
Veh in Median Storage, #	0	-	0	-	-	0
Grade, %	0	-	0	-	-	0
Peak Hour Factor	92	92	92	92	92	92
Heavy Vehicles, %	2	2	2	2	2	2
Mvmt Flow	14	40	180	23	63	413

Major/Minor	Minor1		Major1		Major2	
Conflicting Flow All	751	212	0	0	213	0
Stage 1	202	-	-	-	-	-
Stage 2	549	-	-	-	-	-
Critical Hdwy	6.42	6.22	-	-	4.12	-
Critical Hdwy Stg 1	5.42	-	-	-	-	-
Critical Hdwy Stg 2	5.42	-	-	-	-	-
Follow-up Hdwy	3.518	3.318	-	-	2.218	-
Pot Cap-1 Maneuver	378	828	-	-	1357	-
Stage 1	832	-	-	-	-	-
Stage 2	579	-	-	-	-	-
Platoon blocked, %			-	-		-
Mov Cap-1 Maneuver	348	812	-	-	1344	-
Mov Cap-2 Maneuver	348	-	-	-	-	-
Stage 1	824	-	-	-	-	-
Stage 2	538	-	-	-	-	-

Approach	WB	NB	SB
HCM Control Delay, s	11.6	0	1
HCM LOS	B		

Minor Lane/Major Mvmt	NBT	NBR	WBLn1	SBL	SBT
Capacity (veh/h)	-	-	603	1344	-
HCM Lane V/C Ratio	-	-	0.09	0.047	-
HCM Control Delay (s)	-	-	11.6	7.8	0
HCM Lane LOS	-	-	B	A	A
HCM 95th %tile Q(veh)	-	-	0.3	0.1	-

Intersection	
Int Delay, s/veh	1.7

Movement	WBL	WBR	NBT	NBR	SBL	SBT
Lane Configurations						
Traffic Vol, veh/h	20	33	154	32	53	340
Future Vol, veh/h	20	33	154	32	53	340
Conflicting Peds, #/hr	10	10	0	10	10	0
Sign Control	Stop	Stop	Free	Free	Free	Free
RT Channelized	-	None	-	None	-	None
Storage Length	0	-	-	-	-	-
Veh in Median Storage, #	0	-	0	-	-	0
Grade, %	0	-	0	-	-	0
Peak Hour Factor	92	92	92	92	92	92
Heavy Vehicles, %	2	2	2	2	2	2
Mvmt Flow	22	36	167	35	58	370

Major/Minor	Minor1		Major1		Major2	
Conflicting Flow All	691	205	0	0	212	0
Stage 1	195	-	-	-	-	-
Stage 2	496	-	-	-	-	-
Critical Hdwy	6.42	6.22	-	-	4.12	-
Critical Hdwy Stg 1	5.42	-	-	-	-	-
Critical Hdwy Stg 2	5.42	-	-	-	-	-
Follow-up Hdwy	3.518	3.318	-	-	2.218	-
Pot Cap-1 Maneuver	410	836	-	-	1358	-
Stage 1	838	-	-	-	-	-
Stage 2	612	-	-	-	-	-
Platoon blocked, %			-	-		-
Mov Cap-1 Maneuver	380	820	-	-	1345	-
Mov Cap-2 Maneuver	380	-	-	-	-	-
Stage 1	830	-	-	-	-	-
Stage 2	573	-	-	-	-	-

Approach	WB	NB	SB
HCM Control Delay, s	12	0	1.1
HCM LOS	B		

Minor Lane/Major Mvmt	NBT	NBR	WBLn1	SBL	SBT
Capacity (veh/h)	-	-	571	1345	-
HCM Lane V/C Ratio	-	-	0.101	0.043	-
HCM Control Delay (s)	-	-	12	7.8	0
HCM Lane LOS	-	-	B	A	A
HCM 95th %tile Q(veh)	-	-	0.3	0.1	-

Intersection	
Int Delay, s/veh	6.5

Movement	EBL	EBR	NBL	NBT	SBT	SBR
Lane Configurations						
Traffic Vol, veh/h	67	51	71	519	716	86
Future Vol, veh/h	67	51	71	519	716	86
Conflicting Peds, #/hr	10	10	10	0	0	10
Sign Control	Stop	Stop	Free	Free	Free	Free
RT Channelized	-	None	-	None	-	None
Storage Length	0	-	410	-	-	80
Veh in Median Storage, #	0	-	-	0	0	-
Grade, %	0	-	-	0	0	-
Peak Hour Factor	92	92	92	92	92	92
Heavy Vehicles, %	2	2	2	2	2	2
Mvmt Flow	73	55	77	564	778	93

Major/Minor	Minor2		Major1		Major2	
Conflicting Flow All	1516	798	881	0	-	0
Stage 1	788	-	-	-	-	-
Stage 2	728	-	-	-	-	-
Critical Hdwy	6.42	6.22	4.12	-	-	-
Critical Hdwy Stg 1	5.42	-	-	-	-	-
Critical Hdwy Stg 2	5.42	-	-	-	-	-
Follow-up Hdwy	3.518	3.318	2.218	-	-	-
Pot Cap-1 Maneuver	131	386	767	-	-	-
Stage 1	448	-	-	-	-	-
Stage 2	478	-	-	-	-	-
Platoon blocked, %				-	-	-
Mov Cap-1 Maneuver	115	379	760	-	-	-
Mov Cap-2 Maneuver	115	-	-	-	-	-
Stage 1	399	-	-	-	-	-
Stage 2	473	-	-	-	-	-

Approach	EB	NB	SB
HCM Control Delay, s	77.4	1.2	0
HCM LOS	F		

Minor Lane/Major Mvmt	NBL	NBT	EBLn1	SBT	SBR
Capacity (veh/h)	760	-	165	-	-
HCM Lane V/C Ratio	0.102	-	0.777	-	-
HCM Control Delay (s)	10.3	-	77.4	-	-
HCM Lane LOS	B	-	F	-	-
HCM 95th %tile Q(veh)	0.3	-	5	-	-

Intersection	
Int Delay, s/veh	3.4

Movement	EBL	EBT	WBT	WBR	SBL	SBR
Lane Configurations						
Traffic Vol, veh/h	0	0	0	21	13	0
Future Vol, veh/h	0	0	0	21	13	0
Conflicting Peds, #/hr	10	0	0	10	10	10
Sign Control	Free	Free	Free	Free	Stop	Stop
RT Channelized	-	None	-	None	-	None
Storage Length	-	-	-	-	0	-
Veh in Median Storage, #	-	0	0	-	0	-
Grade, %	-	0	0	-	0	-
Peak Hour Factor	92	92	92	92	92	92
Heavy Vehicles, %	2	2	2	2	2	2
Mvmt Flow	0	0	0	23	14	0

Major/Minor	Major1		Major2		Minor2	
Conflicting Flow All	33	0	-	0	32	32
Stage 1	-	-	-	-	22	-
Stage 2	-	-	-	-	10	-
Critical Hdwy	4.12	-	-	-	6.42	6.22
Critical Hdwy Stg 1	-	-	-	-	5.42	-
Critical Hdwy Stg 2	-	-	-	-	5.42	-
Follow-up Hdwy	2.218	-	-	-	3.518	3.318
Pot Cap-1 Maneuver	1579	-	-	-	982	1042
Stage 1	-	-	-	-	1001	-
Stage 2	-	-	-	-	1013	-
Platoon blocked, %		-	-	-		
Mov Cap-1 Maneuver	1564	-	-	-	962	1022
Mov Cap-2 Maneuver	-	-	-	-	962	-
Stage 1	-	-	-	-	991	-
Stage 2	-	-	-	-	1003	-

Approach	EB	WB	SB
HCM Control Delay, s	0	0	8.8
HCM LOS			A

Minor Lane/Major Mvmt	EBL	EBT	WBT	WBR	SBLn1
Capacity (veh/h)	1564	-	-	-	962
HCM Lane V/C Ratio	-	-	-	-	0.015
HCM Control Delay (s)	0	-	-	-	8.8
HCM Lane LOS	A	-	-	-	A
HCM 95th %tile Q(veh)	0	-	-	-	0

Intersection	
Int Delay, s/veh	2

Movement	EBL	EBT	WBT	WBR	SBL	SBR
Lane Configurations						
Traffic Vol, veh/h	0	13	21	26	17	0
Future Vol, veh/h	0	13	21	26	17	0
Conflicting Peds, #/hr	10	0	0	10	10	10
Sign Control	Free	Free	Free	Free	Stop	Stop
RT Channelized	-	None	-	None	-	None
Storage Length	-	-	-	-	0	-
Veh in Median Storage, #	-	0	0	-	0	-
Grade, %	-	0	0	-	0	-
Peak Hour Factor	92	92	92	92	92	92
Heavy Vehicles, %	2	2	2	2	2	2
Mvmt Flow	0	14	23	28	18	0

Major/Minor	Major1		Major2		Minor2	
Conflicting Flow All	61	0	-	0	71	57
Stage 1	-	-	-	-	47	-
Stage 2	-	-	-	-	24	-
Critical Hdwy	4.12	-	-	-	6.42	6.22
Critical Hdwy Stg 1	-	-	-	-	5.42	-
Critical Hdwy Stg 2	-	-	-	-	5.42	-
Follow-up Hdwy	2.218	-	-	-	3.518	3.318
Pot Cap-1 Maneuver	1542	-	-	-	933	1009
Stage 1	-	-	-	-	975	-
Stage 2	-	-	-	-	999	-
Platoon blocked, %		-	-	-		
Mov Cap-1 Maneuver	1527	-	-	-	914	990
Mov Cap-2 Maneuver	-	-	-	-	914	-
Stage 1	-	-	-	-	965	-
Stage 2	-	-	-	-	989	-

Approach	EB	WB	SB
HCM Control Delay, s	0	0	9
HCM LOS			A

Minor Lane/Major Mvmt	EBL	EBT	WBT	WBR	SBLn1
Capacity (veh/h)	1527	-	-	-	914
HCM Lane V/C Ratio	-	-	-	-	0.02
HCM Control Delay (s)	0	-	-	-	9
HCM Lane LOS	A	-	-	-	A
HCM 95th %tile Q(veh)	0	-	-	-	0.1

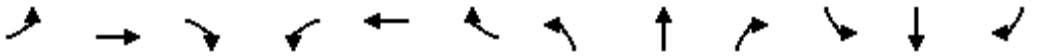

Movement	EBL	EBT	EBR	WBL	WBT	WBR	NBL	NBT	NBR	SBL	SBT	SBR
Lane Configurations												
Traffic Volume (veh/h)	104	40	52	50	51	116	70	294	21	153	331	125
Future Volume (veh/h)	104	40	52	50	51	116	70	294	21	153	331	125
Initial Q (Qb), veh	0	0	0	0	0	0	0	0	0	0	0	0
Ped-Bike Adj(A_pbT)	1.00		0.97	1.00		0.94	1.00		0.97	1.00		0.97
Parking Bus, Adj	1.00	1.00	1.00	1.00	1.00	1.00	1.00	1.00	1.00	1.00	1.00	1.00
Work Zone On Approach		No			No			No			No	
Adj Sat Flow, veh/h/ln	1870	1870	1870	1870	1870	1870	1870	1870	1870	1870	1870	1870
Adj Flow Rate, veh/h	141	54	70	75	76	173	82	346	25	161	348	132
Peak Hour Factor	0.74	0.74	0.74	0.67	0.67	0.67	0.85	0.85	0.85	0.95	0.95	0.95
Percent Heavy Veh, %	2	2	2	2	2	2	2	2	2	2	2	2
Cap, veh/h	255	428	350	211	382	303	239	465	34	237	676	251
Arrive On Green	0.14	0.23	0.23	0.12	0.20	0.20	0.13	0.27	0.27	0.13	0.27	0.27
Sat Flow, veh/h	1781	1870	1531	1781	1870	1487	1781	1719	124	1781	2510	933
Grp Volume(v), veh/h	141	54	70	75	76	173	82	0	371	161	244	236
Grp Sat Flow(s),veh/h/ln	1781	1870	1531	1781	1870	1487	1781	0	1843	1781	1777	1667
Q Serve(g_s), s	5.3	1.7	2.7	2.8	2.4	7.6	3.0	0.0	13.3	6.2	8.4	8.7
Cycle Q Clear(g_c), s	5.3	1.7	2.7	2.8	2.4	7.6	3.0	0.0	13.3	6.2	8.4	8.7
Prop In Lane	1.00		1.00	1.00		1.00	1.00		0.07	1.00		0.56
Lane Grp Cap(c), veh/h	255	428	350	211	382	303	239	0	498	237	478	449
V/C Ratio(X)	0.55	0.13	0.20	0.36	0.20	0.57	0.34	0.00	0.74	0.68	0.51	0.53
Avail Cap(c_a), veh/h	370	907	742	271	803	638	296	0	970	444	1083	1016
HCM Platoon Ratio	1.00	1.00	1.00	1.00	1.00	1.00	1.00	1.00	1.00	1.00	1.00	1.00
Upstream Filter(I)	1.00	1.00	1.00	1.00	1.00	1.00	1.00	0.00	1.00	1.00	1.00	1.00
Uniform Delay (d), s/veh	28.8	22.1	22.5	29.3	23.8	25.9	28.4	0.0	24.1	29.8	22.4	22.5
Incr Delay (d2), s/veh	0.7	0.2	0.4	0.4	0.4	2.4	0.3	0.0	3.2	1.3	1.2	1.4
Initial Q Delay(d3),s/veh	0.0	0.0	0.0	0.0	0.0	0.0	0.0	0.0	0.0	0.0	0.0	0.0
%ile BackOfQ(50%),veh/ln	2.2	0.7	1.0	1.2	1.1	2.8	1.2	0.0	5.7	2.6	3.4	3.3
Unsig. Movement Delay, s/veh												
LnGrp Delay(d),s/veh	29.5	22.3	22.9	29.7	24.2	28.3	28.7	0.0	27.2	31.1	23.6	23.8
LnGrp LOS	C	C	C	C	C	C	C	A	C	C	C	C
Approach Vol, veh/h		265			324			453			641	
Approach Delay, s/veh		26.3			27.6			27.5			25.5	
Approach LOS		C			C			C			C	

Timer - Assigned Phs	1	2	3	4	5	6	7	8
Phs Duration (G+Y+Rc), s	13.6	25.5	12.6	20.5	13.7	25.4	14.3	18.7
Change Period (Y+Rc), s	4.0	6.0	4.0	4.0	4.0	6.0	4.0	4.0
Max Green Setting (Gmax), s	18.0	38.0	11.0	35.0	12.0	44.0	15.0	31.0
Max Q Clear Time (g_c+I1), s	8.2	15.3	4.8	4.7	5.0	10.7	7.3	9.6
Green Ext Time (p_c), s	0.1	3.0	0.0	0.8	0.0	4.5	0.1	1.5

Intersection Summary	
HCM 6th Ctrl Delay	26.6
HCM 6th LOS	C

Intersection	
Intersection Delay, s/veh	59.9
Intersection LOS	F

Movement	EBL	EBT	EBR	WBL	WBT	WBR	NBL	NBT	NBR	SBL	SBT	SBR
Lane Configurations												
Traffic Vol, veh/h	23	193	240	14	117	209	106	182	16	206	253	15
Future Vol, veh/h	23	193	240	14	117	209	106	182	16	206	253	15
Peak Hour Factor	0.83	0.83	0.83	0.90	0.90	0.90	0.89	0.89	0.89	0.91	0.91	0.91
Heavy Vehicles, %	2	2	2	2	2	2	2	2	2	2	2	2
Mvmt Flow	28	233	289	16	130	232	119	204	18	226	278	16
Number of Lanes	0	1	1	0	1	1	0	1	0	0	1	0

Approach	EB	WB	NB	SB
Opposing Approach	WB	EB	SB	NB
Opposing Lanes	2	2	1	1
Conflicting Approach Left	SB	NB	EB	WB
Conflicting Lanes Left	1	1	2	2
Conflicting Approach Right	NB	SB	WB	EB
Conflicting Lanes Right	1	1	2	2
HCM Control Delay	26.4	20.3	41.1	136.2
HCM LOS	D	C	E	F

Lane	NBLn1	EBLn1	EBLn2	WBLn1	WBLn2	SBLn1
Vol Left, %	35%	11%	0%	11%	0%	43%
Vol Thru, %	60%	89%	0%	89%	0%	53%
Vol Right, %	5%	0%	100%	0%	100%	3%
Sign Control	Stop	Stop	Stop	Stop	Stop	Stop
Traffic Vol by Lane	304	216	240	131	209	474
LT Vol	106	23	0	14	0	206
Through Vol	182	193	0	117	0	253
RT Vol	16	0	240	0	209	15
Lane Flow Rate	342	260	289	146	232	521
Geometry Grp	2	7	7	7	7	2
Degree of Util (X)	0.808	0.634	0.644	0.367	0.538	1.197
Departure Headway (Hd)	9.178	9.439	8.648	9.788	8.995	8.276
Convergence, Y/N	Yes	Yes	Yes	Yes	Yes	Yes
Cap	396	385	419	370	404	438
Service Time	7.178	7.139	6.348	7.488	6.695	6.375
HCM Lane V/C Ratio	0.864	0.675	0.69	0.395	0.574	1.189
HCM Control Delay	41.1	27.1	25.7	18.1	21.7	136.2
HCM Lane LOS	E	D	D	C	C	F
HCM 95th-tile Q	7.2	4.2	4.4	1.6	3.1	20.2

Intersection	
Int Delay, s/veh	2.9

Movement	EBL	EBT	EBR	WBL	WBT	WBR	NBL	NBT	NBR	SBL	SBT	SBR
Lane Configurations		↕			↕			↕			↕	
Traffic Vol, veh/h	3	330	17	5	280	22	10	7	1	15	5	2
Future Vol, veh/h	3	330	17	5	280	22	10	7	1	15	5	2
Conflicting Peds, #/hr	10	0	10	10	0	10	10	0	10	10	0	10
Sign Control	Free	Free	Free	Free	Free	Free	Stop	Stop	Stop	Stop	Stop	Stop
RT Channelized	-	-	None	-	-	None	-	-	None	-	-	None
Storage Length	-	-	-	-	-	-	-	-	-	-	-	-
Veh in Median Storage, #	-	0	-	-	0	-	-	0	-	-	0	-
Grade, %	-	0	-	-	0	-	-	0	-	-	0	-
Peak Hour Factor	85	85	85	87	87	87	50	50	50	25	25	25
Heavy Vehicles, %	2	2	2	2	2	2	2	2	2	2	2	2
Mvmt Flow	4	388	20	6	322	25	20	14	2	60	20	8

Major/Minor	Major1			Major2			Minor1			Minor2		
Conflicting Flow All	357	0	0	418	0	0	787	785	418	781	783	355
Stage 1	-	-	-	-	-	-	416	416	-	357	357	-
Stage 2	-	-	-	-	-	-	371	369	-	424	426	-
Critical Hdwy	4.12	-	-	4.12	-	-	7.12	6.52	6.22	7.12	6.52	6.22
Critical Hdwy Stg 1	-	-	-	-	-	-	6.12	5.52	-	6.12	5.52	-
Critical Hdwy Stg 2	-	-	-	-	-	-	6.12	5.52	-	6.12	5.52	-
Follow-up Hdwy	2.218	-	-	2.218	-	-	3.518	4.018	3.318	3.518	4.018	3.318
Pot Cap-1 Maneuver	1202	-	-	1141	-	-	309	325	635	312	325	689
Stage 1	-	-	-	-	-	-	614	592	-	661	628	-
Stage 2	-	-	-	-	-	-	649	621	-	608	586	-
Platoon blocked, %		-	-		-	-						
Mov Cap-1 Maneuver	1191	-	-	1130	-	-	283	315	623	292	315	676
Mov Cap-2 Maneuver	-	-	-	-	-	-	283	315	-	292	315	-
Stage 1	-	-	-	-	-	-	606	584	-	652	617	-
Stage 2	-	-	-	-	-	-	610	610	-	584	578	-

Approach	EB	WB	NB	SB
HCM Control Delay, s	0.1	0.1	18.4	20.9
HCM LOS			C	C

Minor Lane/Major Mvmt	NBLn1	EBL	EBT	EBR	WBL	WBT	WBR	SBLn1
Capacity (veh/h)	304	1191	-	-	1130	-	-	313
HCM Lane V/C Ratio	0.118	0.003	-	-	0.005	-	-	0.281
HCM Control Delay (s)	18.4	8	0	-	8.2	0	-	20.9
HCM Lane LOS	C	A	A	-	A	A	-	C
HCM 95th %tile Q(veh)	0.4	0	-	-	0	-	-	1.1

APPENDIX H

YEAR 2039 WITHOUT PROJECT INTERSECTION ANALYSIS WORKSHEETS

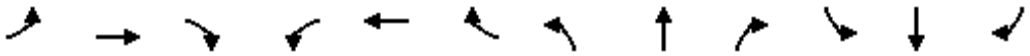

Movement	EBL	EBT	EBR	WBL	WBT	WBR	NBL	NBT	NBR	SBL	SBT	SBR
Lane Configurations												
Traffic Volume (veh/h)	112	239	208	98	248	64	137	815	88	97	576	104
Future Volume (veh/h)	112	239	208	98	248	64	137	815	88	97	576	104
Initial Q (Qb), veh	0	0	0	0	0	0	0	0	0	0	0	0
Ped-Bike Adj(A_pbT)	1.00		0.97	1.00		0.97	1.00		0.96	1.00		0.96
Parking Bus, Adj	1.00	1.00	1.00	1.00	1.00	1.00	1.00	1.00	1.00	1.00	1.00	1.00
Work Zone On Approach		No			No			No			No	
Adj Sat Flow, veh/h/ln	1870	1870	1870	1870	1870	1870	1870	1870	1870	1870	1870	1870
Adj Flow Rate, veh/h	158	337	293	153	388	100	176	1045	113	143	847	153
Peak Hour Factor	0.71	0.71	0.71	0.64	0.64	0.64	0.78	0.78	0.78	0.68	0.68	0.68
Percent Heavy Veh, %	2	2	2	2	2	2	2	2	2	2	2	2
Cap, veh/h	184	445	364	179	440	360	202	1228	133	169	1082	195
Arrive On Green	0.10	0.24	0.24	0.10	0.24	0.24	0.11	0.38	0.38	0.09	0.36	0.36
Sat Flow, veh/h	1781	1870	1532	1781	1870	1532	1781	3219	348	1781	2983	539
Grp Volume(v), veh/h	158	337	293	153	388	100	176	576	582	143	505	495
Grp Sat Flow(s),veh/h/ln	1781	1870	1532	1781	1870	1532	1781	1777	1790	1781	1777	1744
Q Serve(g_s), s	10.6	20.4	22.0	10.3	24.4	6.5	11.9	36.2	36.3	9.6	30.8	30.8
Cycle Q Clear(g_c), s	10.6	20.4	22.0	10.3	24.4	6.5	11.9	36.2	36.3	9.6	30.8	30.8
Prop In Lane	1.00		1.00	1.00		1.00	1.00		0.19	1.00		0.31
Lane Grp Cap(c), veh/h	184	445	364	179	440	360	202	678	683	169	645	633
V/C Ratio(X)	0.86	0.76	0.80	0.85	0.88	0.28	0.87	0.85	0.85	0.85	0.78	0.78
Avail Cap(c_a), veh/h	201	497	407	197	492	403	216	678	683	181	645	633
HCM Platoon Ratio	1.00	1.00	1.00	1.00	1.00	1.00	1.00	1.00	1.00	1.00	1.00	1.00
Upstream Filter(I)	1.00	1.00	1.00	0.49	0.49	0.49	0.48	0.48	0.48	1.00	1.00	1.00
Uniform Delay (d), s/veh	53.8	43.2	43.8	54.0	45.0	38.2	53.2	34.5	34.6	54.3	34.6	34.6
Incr Delay (d2), s/veh	25.5	4.9	8.9	14.0	8.0	0.1	15.0	6.6	6.6	26.2	9.2	9.4
Initial Q Delay(d3),s/veh	0.0	0.0	0.0	0.0	0.0	0.0	0.0	0.0	0.0	0.0	0.0	0.0
%ile BackOfQ(50%),veh/ln	6.0	9.9	9.1	5.3	12.2	2.4	6.1	16.7	16.8	5.6	14.8	14.6
Unsig. Movement Delay, s/veh												
LnGrp Delay(d),s/veh	79.3	48.1	52.7	68.0	53.0	38.3	68.2	41.1	41.2	80.6	43.8	43.9
LnGrp LOS	E	D	D	E	D	D	E	D	D	F	D	D
Approach Vol, veh/h		788			641			1334			1143	
Approach Delay, s/veh		56.1			54.3			44.7			48.5	
Approach LOS		E			D			D			D	

Timer - Assigned Phs	1	2	3	4	5	6	7	8
Phs Duration (G+Y+Rc), s	17.2	52.2	17.9	34.7	19.4	50.0	18.2	34.4
Change Period (Y+Rc), s	5.6	5.7	5.6	5.7	5.6	5.7	5.6	5.7
Max Green Setting (Gmax), s	12.4	41.1	13.5	32.4	14.8	38.7	13.8	32.1
Max Q Clear Time (g_c+I1), s	11.6	38.3	12.3	24.0	13.9	32.8	12.6	26.4
Green Ext Time (p_c), s	0.0	1.5	0.0	1.3	0.0	2.4	0.0	0.9

Intersection Summary	
HCM 6th Ctrl Delay	49.7
HCM 6th LOS	D



Movement	EBL	EBT	EBR	WBL	WBT	WBR	NBL	NBT	NBR	SBL	SBT	SBR
Lane Configurations												
Traffic Volume (veh/h)	81	261	86	21	269	19	140	629	28	70	409	94
Future Volume (veh/h)	81	261	86	21	269	19	140	629	28	70	409	94
Initial Q (Qb), veh	0	0	0	0	0	0	0	0	0	0	0	0
Ped-Bike Adj(A_pbT)	1.00		0.98	1.00		0.97	1.00		0.95	1.00		0.95
Parking Bus, Adj	1.00	1.00	1.00	1.00	1.00	1.00	1.00	1.00	1.00	1.00	1.00	1.00
Work Zone On Approach		No			No			No			No	
Adj Sat Flow, veh/h/ln	1870	1870	1870	1870	1870	1870	1870	1870	1870	1870	1870	1870
Adj Flow Rate, veh/h	119	384	126	30	384	27	187	839	37	104	610	140
Peak Hour Factor	0.68	0.68	0.68	0.70	0.70	0.70	0.75	0.75	0.75	0.67	0.67	0.67
Percent Heavy Veh, %	2	2	2	2	2	2	2	2	2	2	2	2
Cap, veh/h	200	596	196	66	460	31	228	1132	50	134	779	178
Arrive On Green	0.11	0.45	0.45	0.29	0.29	0.29	0.13	0.33	0.33	0.08	0.27	0.27
Sat Flow, veh/h	1781	1339	439	68	1596	108	1781	3459	153	1781	2839	650
Grp Volume(v), veh/h	119	0	510	441	0	0	187	431	445	104	381	369
Grp Sat Flow(s),veh/h/ln	1781	0	1779	1772	0	0	1781	1777	1834	1781	1777	1712
Q Serve(g_s), s	5.3	0.0	18.6	9.3	0.0	0.0	8.5	17.9	17.9	4.8	16.5	16.6
Cycle Q Clear(g_c), s	5.3	0.0	18.6	19.5	0.0	0.0	8.5	17.9	17.9	4.8	16.5	16.6
Prop In Lane	1.00		0.25	0.07		0.06	1.00		0.08	1.00		0.38
Lane Grp Cap(c), veh/h	200	0	792	557	0	0	228	582	600	134	488	470
V/C Ratio(X)	0.59	0.00	0.64	0.79	0.00	0.00	0.82	0.74	0.74	0.78	0.78	0.79
Avail Cap(c_a), veh/h	284	0	1185	856	0	0	391	834	861	272	715	688
HCM Platoon Ratio	1.00	1.00	1.00	1.00	1.00	1.00	1.00	1.00	1.00	1.00	1.00	1.00
Upstream Filter(I)	1.00	0.00	1.00	1.00	0.00	0.00	1.00	1.00	1.00	1.00	1.00	1.00
Uniform Delay (d), s/veh	35.2	0.0	18.0	27.9	0.0	0.0	35.4	24.9	24.9	37.8	27.9	28.0
Incr Delay (d2), s/veh	2.8	0.0	0.9	2.9	0.0	0.0	7.1	2.1	2.0	9.3	3.4	3.7
Initial Q Delay(d3),s/veh	0.0	0.0	0.0	0.0	0.0	0.0	0.0	0.0	0.0	0.0	0.0	0.0
%ile BackOfQ(50%),veh/ln	2.4	0.0	7.2	8.2	0.0	0.0	4.1	7.6	7.8	2.4	7.2	7.0
Unsig. Movement Delay, s/veh												
LnGrp Delay(d),s/veh	38.0	0.0	18.9	30.7	0.0	0.0	42.5	27.0	26.9	47.1	31.3	31.6
LnGrp LOS	D	A	B	C	A	A	D	C	C	D	C	C
Approach Vol, veh/h		629			441			1063			854	
Approach Delay, s/veh		22.5			30.7			29.7			33.4	
Approach LOS		C			C			C			C	

Timer - Assigned Phs	1	2		4	5	6	7	8
Phs Duration (G+Y+Rc), s	10.0	31.8		41.6	14.4	27.4	13.1	28.5
Change Period (Y+Rc), s	3.7	4.5		4.5	3.7	4.5	3.7	4.5
Max Green Setting (Gmax), s	12.3	39.1		55.5	18.3	33.5	13.3	38.5
Max Q Clear Time (g_c+I1), s	10.8	19.9		20.6	10.5	18.6	7.3	21.5
Green Ext Time (p_c), s	0.1	5.6		3.6	0.3	4.3	0.1	2.5

Intersection Summary	
HCM 6th Ctrl Delay	29.4
HCM 6th LOS	C



Movement	EBL	EBT	EBR	WBL	WBT	WBR	NBL	NBT	NBR	SBL	SBT	SBR
Lane Configurations												
Traffic Volume (veh/h)	45	198	71	86	141	206	38	617	95	121	489	16
Future Volume (veh/h)	45	198	71	86	141	206	38	617	95	121	489	16
Initial Q (Qb), veh	0	0	0	0	0	0	0	0	0	0	0	0
Ped-Bike Adj(A_pbT)	1.00		0.97	1.00		0.96	1.00		0.95	1.00		0.95
Parking Bus, Adj	1.00	1.00	1.00	1.00	1.00	1.00	1.00	1.00	1.00	1.00	1.00	1.00
Work Zone On Approach		No			No			No			No	
Adj Sat Flow, veh/h/ln	1870	1870	1870	1870	1870	1870	1870	1870	1870	1870	1870	1870
Adj Flow Rate, veh/h	58	254	91	105	172	251	43	701	108	146	589	19
Peak Hour Factor	0.78	0.78	0.78	0.82	0.82	0.82	0.88	0.88	0.88	0.83	0.83	0.83
Percent Heavy Veh, %	2	2	2	2	2	2	2	2	2	2	2	2
Cap, veh/h	64	281	101	142	233	312	65	823	127	171	1152	37
Arrive On Green	0.25	0.25	0.25	0.20	0.20	0.20	0.04	0.27	0.27	0.10	0.33	0.33
Sat Flow, veh/h	255	1116	400	696	1140	1526	1781	3061	471	1781	3507	113
Grp Volume(v), veh/h	403	0	0	277	0	251	43	407	402	146	298	310
Grp Sat Flow(s),veh/h/ln	1770	0	0	1836	0	1526	1781	1777	1755	1781	1777	1844
Q Serve(g_s), s	28.8	0.0	0.0	18.4	0.0	20.4	3.1	28.3	28.4	10.5	17.7	17.7
Cycle Q Clear(g_c), s	28.8	0.0	0.0	18.4	0.0	20.4	3.1	28.3	28.4	10.5	17.7	17.7
Prop In Lane	0.14		0.23	0.38		1.00	1.00		0.27	1.00		0.06
Lane Grp Cap(c), veh/h	446	0	0	376	0	312	65	477	472	171	583	605
V/C Ratio(X)	0.90	0.00	0.00	0.74	0.00	0.80	0.66	0.85	0.85	0.85	0.51	0.51
Avail Cap(c_a), veh/h	502	0	0	521	0	433	122	510	504	209	597	619
HCM Platoon Ratio	1.00	1.00	1.00	1.00	1.00	1.00	1.00	1.00	1.00	1.00	1.00	1.00
Upstream Filter(I)	1.00	0.00	0.00	1.00	0.00	1.00	1.00	1.00	1.00	1.00	1.00	1.00
Uniform Delay (d), s/veh	47.2	0.0	0.0	48.6	0.0	49.4	62.0	45.2	45.2	58.0	35.3	35.4
Incr Delay (d2), s/veh	18.3	0.0	0.0	3.5	0.0	7.4	4.3	16.0	16.3	20.9	2.5	2.4
Initial Q Delay(d3),s/veh	0.0	0.0	0.0	0.0	0.0	0.0	0.0	0.0	0.0	0.0	0.0	0.0
%ile BackOfQ(50%),veh/ln	14.8	0.0	0.0	8.7	0.0	8.4	1.5	14.3	14.2	5.7	7.9	8.2
Unsig. Movement Delay, s/veh												
LnGrp Delay(d),s/veh	65.6	0.0	0.0	52.0	0.0	56.8	66.3	61.2	61.5	78.9	37.8	37.8
LnGrp LOS	E	A	A	D	A	E	E	E	E	E	D	D
Approach Vol, veh/h		403			528			852			754	
Approach Delay, s/veh		65.6			54.3			61.6			45.8	
Approach LOS		E			D			E			D	

Timer - Assigned Phs	1	2		4	5	6		8
Phs Duration (G+Y+Rc), s	10.4	48.2		32.8	18.2	40.4		39.0
Change Period (Y+Rc), s	* 5.7	5.4		6.1	* 5.7	5.4		6.1
Max Green Setting (Gmax), s	* 8.3	43.8		37.0	* 15	37.4		37.0
Max Q Clear Time (g_c+I1), s	15.1	19.7		22.4	12.5	30.4		30.8
Green Ext Time (p_c), s	0.0	8.5		2.2	0.0	4.7		1.3

Intersection Summary	
HCM 6th Ctrl Delay	56.0
HCM 6th LOS	E

Notes

* HCM 6th computational engine requires equal clearance times for the phases crossing the barrier.



Movement	EBL	EBT	EBR	WBL	WBT	WBR	NBL	NBT	NBR	SBL	SBT	SBR
Lane Configurations												
Traffic Volume (veh/h)	65	92	95	37	144	58	124	426	69	28	350	61
Future Volume (veh/h)	65	92	95	37	144	58	124	426	69	28	350	61
Initial Q (Qb), veh	0	0	0	0	0	0	0	0	0	0	0	0
Ped-Bike Adj(A_pbT)	1.00		0.91	1.00		0.94	1.00		0.96	1.00		0.95
Parking Bus, Adj	1.00	1.00	1.00	1.00	1.00	1.00	1.00	1.00	1.00	1.00	1.00	1.00
Work Zone On Approach		No			No			No			No	
Adj Sat Flow, veh/h/ln	1870	1870	1870	1870	1870	1870	1870	1870	1870	1870	1870	1870
Adj Flow Rate, veh/h	75	106	109	45	173	70	146	501	81	36	455	79
Peak Hour Factor	0.87	0.87	0.87	0.83	0.83	0.83	0.85	0.85	0.85	0.77	0.77	0.77
Percent Heavy Veh, %	2	2	2	2	2	2	2	2	2	2	2	2
Cap, veh/h	96	135	182	56	215	87	180	554	90	61	539	434
Arrive On Green	0.13	0.13	0.13	0.20	0.20	0.20	0.10	0.36	0.36	0.03	0.29	0.29
Sat Flow, veh/h	759	1073	1447	273	1050	425	1781	1559	252	1781	1870	1506
Grp Volume(v), veh/h	181	0	109	288	0	0	146	0	582	36	455	79
Grp Sat Flow(s),veh/h/ln	1832	0	1447	1747	0	0	1781	0	1811	1781	1870	1506
Q Serve(g_s), s	7.9	0.0	5.9	13.0	0.0	0.0	6.6	0.0	25.3	1.6	18.9	3.3
Cycle Q Clear(g_c), s	7.9	0.0	5.9	13.0	0.0	0.0	6.6	0.0	25.3	1.6	18.9	3.3
Prop In Lane	0.41		1.00	0.16		0.24	1.00		0.14	1.00		1.00
Lane Grp Cap(c), veh/h	231	0	182	357	0	0	180	0	644	61	539	434
V/C Ratio(X)	0.79	0.00	0.60	0.81	0.00	0.00	0.81	0.00	0.90	0.59	0.84	0.18
Avail Cap(c_a), veh/h	379	0	299	551	0	0	310	0	1055	116	886	714
HCM Platoon Ratio	1.00	1.00	1.00	1.00	1.00	1.00	1.00	1.00	1.00	1.00	1.00	1.00
Upstream Filter(I)	1.00	0.00	1.00	1.00	0.00	0.00	1.00	0.00	1.00	1.00	1.00	1.00
Uniform Delay (d), s/veh	35.1	0.0	34.2	31.3	0.0	0.0	36.4	0.0	25.3	39.4	27.7	22.1
Incr Delay (d2), s/veh	2.2	0.0	1.2	2.5	0.0	0.0	3.3	0.0	4.2	3.4	1.8	0.1
Initial Q Delay(d3),s/veh	0.0	0.0	0.0	0.0	0.0	0.0	0.0	0.0	0.0	0.0	0.0	0.0
%ile BackOfQ(50%),veh/ln	3.6	0.0	2.1	5.5	0.0	0.0	2.9	0.0	10.4	0.7	8.0	1.1
Unsig. Movement Delay, s/veh												
LnGrp Delay(d),s/veh	37.3	0.0	35.4	33.8	0.0	0.0	39.7	0.0	29.5	42.8	29.5	22.2
LnGrp LOS	D	A	D	C	A	A	D	A	C	D	C	C
Approach Vol, veh/h		290			288			728			570	
Approach Delay, s/veh		36.6			33.8			31.6			29.4	
Approach LOS		D			C			C			C	

Timer - Assigned Phs	1	2		4	5	6		8
Phs Duration (G+Y+Rc), s	8.4	35.2		16.3	14.0	29.6		22.8
Change Period (Y+Rc), s	5.6	5.8		5.9	5.6	5.8		5.9
Max Green Setting (Gmax), s	5.4	48.2		17.1	14.4	39.2		26.1
Max Q Clear Time (g_c+I1), s	3.6	27.3		9.9	8.6	20.9		15.0
Green Ext Time (p_c), s	0.0	2.1		0.5	0.0	1.6		0.8

Intersection Summary		
HCM 6th Ctrl Delay	32.0	
HCM 6th LOS	C	

Intersection	
Intersection Delay, s/veh	116.4
Intersection LOS	F

Movement	EBL	EBT	EBR	WBL	WBT	WBR	NBL	NBT	NBR	SBL	SBT	SBR
Lane Configurations												
Traffic Vol, veh/h	58	166	88	47	124	94	116	609	70	86	378	33
Future Vol, veh/h	58	166	88	47	124	94	116	609	70	86	378	33
Peak Hour Factor	0.73	0.73	0.73	0.74	0.74	0.74	0.78	0.78	0.78	0.66	0.66	0.66
Heavy Vehicles, %	2	2	2	2	2	2	2	2	2	2	2	2
Mvmt Flow	79	227	121	64	168	127	149	781	90	130	573	50
Number of Lanes	0	1	0	0	1	0	1	2	0	1	2	0

Approach	EB	WB	NB	SB
Opposing Approach	WB	EB	SB	NB
Opposing Lanes	1	1	3	3
Conflicting Approach Left	SB	NB	EB	WB
Conflicting Lanes Left	3	3	1	1
Conflicting Approach Right	NB	SB	WB	EB
Conflicting Lanes Right	3	3	1	1
HCM Control Delay	165.5	96.8	144.5	59.8
HCM LOS	F	F	F	F

Lane	NBLn1	NBLn2	NBLn3	EBLn1	WBLn1	SBLn1	SBLn2	SBLn3
Vol Left, %	100%	0%	0%	19%	18%	100%	0%	0%
Vol Thru, %	0%	100%	74%	53%	47%	0%	100%	79%
Vol Right, %	0%	0%	26%	28%	35%	0%	0%	21%
Sign Control	Stop	Stop	Stop	Stop	Stop	Stop	Stop	Stop
Traffic Vol by Lane	116	406	273	312	265	86	252	159
LT Vol	116	0	0	58	47	86	0	0
Through Vol	0	406	203	166	124	0	252	126
RT Vol	0	0	70	88	94	0	0	33
Lane Flow Rate	149	521	350	427	358	130	382	241
Geometry Grp	7	7	7	7	7	7	7	7
Degree of Util (X)	0.425	1.416	0.935	1.245	1.038	0.371	1.033	0.642
Departure Headway (Hd)	11.25	10.71	10.517	11.187	11.566	11.259	10.719	10.562
Convergence, Y/N	Yes	Yes	Yes	Yes	Yes	Yes	Yes	Yes
Cap	323	344	346	329	315	322	340	345
Service Time	8.95	8.41	8.217	8.887	9.266	8.959	8.419	8.262
HCM Lane V/C Ratio	0.461	1.515	1.012	1.298	1.137	0.404	1.124	0.699
HCM Control Delay	22	231.9	66.7	165.5	96.8	20.5	91.8	30.4
HCM Lane LOS	C	F	F	F	F	C	F	D
HCM 95th-tile Q	2	24.7	9.7	18.1	11.8	1.7	12.1	4.2



Movement	EBL	EBT	EBR	WBL	WBT	WBR	NBL	NBT	NBR	SBL	SBT	SBR
Lane Configurations												
Traffic Volume (veh/h)	111	85	158	64	88	21	73	615	30	13	541	36
Future Volume (veh/h)	111	85	158	64	88	21	73	615	30	13	541	36
Initial Q (Qb), veh	0	0	0	0	0	0	0	0	0	0	0	0
Ped-Bike Adj(A_pbT)	1.00		0.96	1.00		0.96	1.00		0.96	1.00		0.95
Parking Bus, Adj	1.00	1.00	1.00	1.00	1.00	1.00	1.00	1.00	1.00	1.00	1.00	1.00
Work Zone On Approach		No			No			No			No	
Adj Sat Flow, veh/h/ln	1870	1870	1870	1870	1870	1870	1870	1870	1870	1870	1870	1870
Adj Flow Rate, veh/h	135	104	193	100	138	33	87	732	36	16	652	43
Peak Hour Factor	0.82	0.82	0.82	0.64	0.64	0.64	0.84	0.84	0.84	0.83	0.83	0.83
Percent Heavy Veh, %	2	2	2	2	2	2	2	2	2	2	2	2
Cap, veh/h	177	136	262	132	182	44	134	1211	60	53	1035	68
Arrive On Green	0.17	0.17	0.17	0.20	0.20	0.20	0.08	0.35	0.35	0.03	0.31	0.31
Sat Flow, veh/h	1027	792	1519	660	911	218	1781	3439	169	1781	3372	222
Grp Volume(v), veh/h	239	0	193	271	0	0	87	378	390	16	343	352
Grp Sat Flow(s),veh/h/ln	1819	0	1519	1788	0	0	1781	1777	1831	1781	1777	1817
Q Serve(g_s), s	9.9	0.0	9.6	11.4	0.0	0.0	3.8	13.9	13.9	0.7	13.2	13.2
Cycle Q Clear(g_c), s	9.9	0.0	9.6	11.4	0.0	0.0	3.8	13.9	13.9	0.7	13.2	13.2
Prop In Lane	0.56		1.00	0.37		0.12	1.00		0.09	1.00		0.12
Lane Grp Cap(c), veh/h	314	0	262	357	0	0	134	626	645	53	545	558
V/C Ratio(X)	0.76	0.00	0.74	0.76	0.00	0.00	0.65	0.60	0.60	0.30	0.63	0.63
Avail Cap(c_a), veh/h	579	0	484	637	0	0	276	863	890	186	774	792
HCM Platoon Ratio	1.00	1.00	1.00	1.00	1.00	1.00	1.00	1.00	1.00	1.00	1.00	1.00
Upstream Filter(I)	1.00	0.00	1.00	1.00	0.00	0.00	1.00	1.00	1.00	1.00	1.00	1.00
Uniform Delay (d), s/veh	31.3	0.0	31.2	30.0	0.0	0.0	35.7	21.2	21.2	37.7	23.6	23.7
Incr Delay (d2), s/veh	3.8	0.0	4.0	3.3	0.0	0.0	2.0	3.4	3.3	1.2	4.3	4.2
Initial Q Delay(d3),s/veh	0.0	0.0	0.0	0.0	0.0	0.0	0.0	0.0	0.0	0.0	0.0	0.0
%ile BackOfQ(50%),veh/ln	4.6	0.0	3.7	5.0	0.0	0.0	1.6	5.8	6.0	0.3	5.7	5.9
Unsig. Movement Delay, s/veh												
LnGrp Delay(d),s/veh	35.1	0.0	35.2	33.3	0.0	0.0	37.7	24.6	24.5	38.9	27.9	27.9
LnGrp LOS	D	A	D	C	A	A	D	C	C	D	C	C
Approach Vol, veh/h		432			271			855			711	
Approach Delay, s/veh		35.2			33.3			25.9			28.2	
Approach LOS		D			C			C			C	

Timer - Assigned Phs	1	2		4	5	6		8
Phs Duration (G+Y+Rc), s	10.7	29.8		20.6	7.1	33.4		18.4
Change Period (Y+Rc), s	* 4.7	5.4		* 4.7	* 4.7	5.4		4.7
Max Green Setting (Gmax), s	* 12	34.6		* 28	* 8.3	38.6		25.3
Max Q Clear Time (g_c+I1), s	5.8	15.2		13.4	2.7	15.9		11.9
Green Ext Time (p_c), s	0.0	8.8		1.4	0.0	10.7		1.8

Intersection Summary		
HCM 6th Ctrl Delay	29.2	
HCM 6th LOS	C	

Notes

* HCM 6th computational engine requires equal clearance times for the phases crossing the barrier.



Movement	EBL	EBT	EBR	WBL	WBT	WBR	NBL	NBT	NBR	SBL	SBT	SBR
Lane Configurations												
Traffic Volume (veh/h)	178	130	349	48	121	60	259	805	50	32	514	102
Future Volume (veh/h)	178	130	349	48	121	60	259	805	50	32	514	102
Initial Q (Qb), veh	0	0	0	0	0	0	0	0	0	0	0	0
Ped-Bike Adj(A_pbT)	1.00		0.98	0.99		0.97	1.00		0.96	1.00		0.97
Parking Bus, Adj	1.00	1.00	1.00	1.00	1.00	1.00	1.00	1.00	1.00	1.00	1.00	1.00
Work Zone On Approach		No			No			No			No	
Adj Sat Flow, veh/h/ln	1870	1870	1870	1870	1870	1870	1870	1870	1870	1870	1870	1870
Adj Flow Rate, veh/h	247	181	485	56	142	71	345	1073	67	44	714	142
Peak Hour Factor	0.72	0.72	0.72	0.85	0.85	0.85	0.75	0.75	0.75	0.72	0.72	0.72
Percent Heavy Veh, %	2	2	2	2	2	2	2	2	2	2	2	2
Cap, veh/h	234	758	626	89	191	86	324	1373	86	59	754	150
Arrive On Green	0.13	0.41	0.41	0.22	0.22	0.22	0.18	0.41	0.41	0.03	0.26	0.26
Sat Flow, veh/h	1781	1870	1546	225	850	385	1781	3387	211	1781	2936	584
Grp Volume(v), veh/h	247	181	485	269	0	0	345	563	577	44	432	424
Grp Sat Flow(s),veh/h/ln	1781	1870	1546	1461	0	0	1781	1777	1822	1781	1777	1743
Q Serve(g_s), s	14.7	7.1	30.5	13.8	0.0	0.0	20.4	30.9	30.9	2.7	26.8	26.8
Cycle Q Clear(g_c), s	14.7	7.1	30.5	19.2	0.0	0.0	20.4	30.9	30.9	2.7	26.8	26.8
Prop In Lane	1.00		1.00	0.21		0.26	1.00		0.12	1.00		0.33
Lane Grp Cap(c), veh/h	234	758	626	366	0	0	324	720	739	59	456	448
V/C Ratio(X)	1.06	0.24	0.77	0.73	0.00	0.00	1.06	0.78	0.78	0.74	0.95	0.95
Avail Cap(c_a), veh/h	234	889	735	463	0	0	324	720	739	81	456	448
HCM Platoon Ratio	1.00	1.00	1.00	1.00	1.00	1.00	1.00	1.00	1.00	1.00	1.00	1.00
Upstream Filter(I)	1.00	1.00	1.00	1.00	0.00	0.00	1.00	1.00	1.00	1.00	1.00	1.00
Uniform Delay (d), s/veh	48.7	22.0	28.9	40.7	0.0	0.0	45.9	29.0	29.0	53.7	40.9	40.9
Incr Delay (d2), s/veh	75.0	0.1	3.6	3.1	0.0	0.0	68.1	5.9	5.7	12.6	29.2	29.8
Initial Q Delay(d3),s/veh	0.0	0.0	0.0	0.0	0.0	0.0	0.0	0.0	0.0	0.0	0.0	0.0
%ile BackOfQ(50%),veh/ln	11.4	3.1	11.7	7.3	0.0	0.0	15.1	14.0	14.4	1.4	15.3	15.1
Unsig. Movement Delay, s/veh												
LnGrp Delay(d),s/veh	123.7	22.0	32.5	43.8	0.0	0.0	114.0	34.9	34.8	66.3	70.1	70.7
LnGrp LOS	F	C	C	D	A	A	F	C	C	E	E	E
Approach Vol, veh/h		913			269			1485			900	
Approach Delay, s/veh		55.1			43.8			53.2			70.2	
Approach LOS		E			D			D			E	

Timer - Assigned Phs	1	2		4	5	6	7	8
Phs Duration (G+Y+Rc), s	9.3	51.2		51.6	26.0	34.5	20.3	31.3
Change Period (Y+Rc), s	5.6	5.7		6.2	5.6	5.7	5.6	6.2
Max Green Setting (Gmax), s	5.1	44.1		53.3	20.4	28.8	14.7	33.0
Max Q Clear Time (g_c+I1), s	4.7	32.9		32.5	22.4	28.8	16.7	21.2
Green Ext Time (p_c), s	0.0	7.0		1.6	0.0	0.0	0.0	1.0

Intersection Summary		
HCM 6th Ctrl Delay	57.3	
HCM 6th LOS	E	



Movement	EBL	EBT	EBR	WBL	WBT	WBR	NBL	NBT	NBR	SBL	SBT	SBR
Lane Configurations												
Traffic Volume (veh/h)	0	0	0	234	1	335	158	562	0	0	776	105
Future Volume (veh/h)	0	0	0	234	1	335	158	562	0	0	776	105
Initial Q (Qb), veh				0	0	0	0	0	0	0	0	0
Ped-Bike Adj(A_pbT)				1.00		0.97	1.00		1.00	1.00		0.96
Parking Bus, Adj				1.00	1.00	1.00	1.00	1.00	1.00	1.00	1.00	1.00
Work Zone On Approach					No			No			No	
Adj Sat Flow, veh/h/ln				1870	1870	1870	1870	1870	0	0	1870	1870
Adj Flow Rate, veh/h				300	1	429	168	598	0	0	902	122
Peak Hour Factor				0.78	0.78	0.78	0.94	0.94	0.94	0.86	0.86	0.86
Percent Heavy Veh, %				2	2	2	2	2	0	0	2	2
Cap, veh/h				572	2	496	202	2020	0	0	1269	172
Arrive On Green				0.32	0.32	0.32	0.11	0.57	0.00	0.00	0.41	0.41
Sat Flow, veh/h				1776	6	1541	1781	3647	0	0	3220	423
Grp Volume(v), veh/h				301	0	429	168	598	0	0	513	511
Grp Sat Flow(s),veh/h/ln				1782	0	1541	1781	1777	0	0	1777	1773
Q Serve(g_s), s				13.2	0.0	25.0	8.8	8.4	0.0	0.0	23.0	23.0
Cycle Q Clear(g_c), s				13.2	0.0	25.0	8.8	8.4	0.0	0.0	23.0	23.0
Prop In Lane				1.00		1.00	1.00		0.00	0.00		0.24
Lane Grp Cap(c), veh/h				574	0	496	202	2020	0	0	721	720
V/C Ratio(X)				0.52	0.00	0.86	0.83	0.30	0.00	0.00	0.71	0.71
Avail Cap(c_a), veh/h				724	0	626	359	2622	0	0	865	863
HCM Platoon Ratio				1.00	1.00	1.00	1.00	1.00	1.00	1.00	1.00	1.00
Upstream Filter(I)				1.00	0.00	1.00	1.00	1.00	0.00	0.00	1.00	1.00
Uniform Delay (d), s/veh				26.5	0.0	30.5	41.5	10.7	0.0	0.0	23.7	23.7
Incr Delay (d2), s/veh				0.7	0.0	10.1	3.4	0.3	0.0	0.0	4.9	4.9
Initial Q Delay(d3),s/veh				0.0	0.0	0.0	0.0	0.0	0.0	0.0	0.0	0.0
%ile BackOfQ(50%),veh/ln				5.6	0.0	10.4	3.9	3.0	0.0	0.0	10.0	9.9
Unsig. Movement Delay, s/veh												
LnGrp Delay(d),s/veh				27.2	0.0	40.6	44.9	11.0	0.0	0.0	28.6	28.6
LnGrp LOS				C	A	D	D	B	A	A	C	C
Approach Vol, veh/h					730			766			1024	
Approach Delay, s/veh					35.1			18.5			28.6	
Approach LOS					D			B			C	

Timer - Assigned Phs	1	2		4		6						
Phs Duration (G+Y+Rc), s	15.5	44.2		35.9		59.8						
Change Period (Y+Rc), s	4.7	5.4		5.1		5.4						
Max Green Setting (Gmax), s	13.8	46.6		38.9		70.6						
Max Q Clear Time (g_c+I1), s	10.8	25.0		27.0		10.4						
Green Ext Time (p_c), s	0.1	13.8		2.9		12.0						

Intersection Summary	
HCM 6th Ctrl Delay	27.4
HCM 6th LOS	C

Notes

* HCM 6th computational engine requires equal clearance times for the phases crossing the barrier.



Movement	EBL	EBT	EBR	WBL	WBT	WBR	NBL	NBT	NBR	SBL	SBT	SBR
Lane Configurations												
Traffic Volume (veh/h)	81	1	233	0	0	0	0	639	170	259	751	0
Future Volume (veh/h)	81	1	233	0	0	0	0	639	170	259	751	0
Initial Q (Qb), veh	0	0	0				0	0	0	0	0	0
Ped-Bike Adj(A_pbT)	1.00		0.97				1.00		0.95	1.00		1.00
Parking Bus, Adj	1.00	1.00	1.00				1.00	1.00	1.00	1.00	1.00	1.00
Work Zone On Approach		No						No			No	
Adj Sat Flow, veh/h/ln	1870	1870	1870				0	1870	1870	1870	1870	0
Adj Flow Rate, veh/h	135	2	388				0	718	191	298	863	0
Peak Hour Factor	0.60	0.60	0.60				0.89	0.89	0.89	0.87	0.87	0.87
Percent Heavy Veh, %	2	2	2				0	2	2	2	2	0
Cap, veh/h	150	2	431				0	1018	432	335	1863	0
Arrive On Green	0.36	0.36	0.36				0.00	0.29	0.29	0.19	0.52	0.00
Sat Flow, veh/h	411	6	1182				0	3647	1506	1781	3647	0
Grp Volume(v), veh/h	525	0	0				0	718	191	298	863	0
Grp Sat Flow(s),veh/h/ln	1600	0	0				0	1777	1506	1781	1777	0
Q Serve(g_s), s	29.3	0.0	0.0				0.0	17.0	9.8	15.4	14.4	0.0
Cycle Q Clear(g_c), s	29.3	0.0	0.0				0.0	17.0	9.8	15.4	14.4	0.0
Prop In Lane	0.26		0.74				0.00		1.00	1.00		0.00
Lane Grp Cap(c), veh/h	583	0	0				0	1018	432	335	1863	0
V/C Ratio(X)	0.90	0.00	0.00				0.00	0.71	0.44	0.89	0.46	0.00
Avail Cap(c_a), veh/h	747	0	0				0	1187	503	554	2469	0
HCM Platoon Ratio	1.00	1.00	1.00				1.00	1.00	1.00	1.00	1.00	1.00
Upstream Filter(I)	1.00	0.00	0.00				0.00	1.00	1.00	1.00	1.00	0.00
Uniform Delay (d), s/veh	28.4	0.0	0.0				0.0	30.1	27.5	37.3	14.1	0.0
Incr Delay (d2), s/veh	11.8	0.0	0.0				0.0	3.4	2.6	5.9	0.7	0.0
Initial Q Delay(d3),s/veh	0.0	0.0	0.0				0.0	0.0	0.0	0.0	0.0	0.0
%ile BackOfQ(50%),veh/ln	12.7	0.0	0.0				0.0	7.4	3.7	7.0	5.4	0.0
Unsig. Movement Delay, s/veh												
LnGrp Delay(d),s/veh	40.2	0.0	0.0				0.0	33.5	30.1	43.2	14.7	0.0
LnGrp LOS	D	A	A				A	C	C	D	B	A
Approach Vol, veh/h		525						909			1161	
Approach Delay, s/veh		40.2						32.8			22.1	
Approach LOS		D						C			C	

Timer - Assigned Phs		2			5	6		8				
Phs Duration (G+Y+Rc), s		54.8			22.4	32.4		39.5				
Change Period (Y+Rc), s		5.4			* 4.7	5.4		5.1				
Max Green Setting (Gmax), s		65.5			* 29	31.5		44.0				
Max Q Clear Time (g_c+I1), s		16.4			17.4	19.0		31.3				
Green Ext Time (p_c), s		18.6			0.3	8.0		3.1				

Intersection Summary												
HCM 6th Ctrl Delay			29.5									
HCM 6th LOS			C									

Notes

* HCM 6th computational engine requires equal clearance times for the phases crossing the barrier.



Movement	EBL	EBT	EBR	WBL	WBT	WBR	NBL	NBT	NBR	SBL	SBT	SBR
Lane Configurations												
Traffic Volume (veh/h)	0	0	0	99	2	136	0	500	173	0	384	91
Future Volume (veh/h)	0	0	0	99	2	136	0	500	173	0	384	91
Initial Q (Qb), veh				0	0	0	0	0	0	0	0	0
Ped-Bike Adj(A_pbT)				1.00		0.97	1.00		0.96	1.00		0.96
Parking Bus, Adj				1.00	1.00	1.00	1.00	1.00	1.00	1.00	1.00	1.00
Work Zone On Approach					No			No			No	
Adj Sat Flow, veh/h/ln				1870	1870	1870	0	1870	1870	0	1870	1870
Adj Flow Rate, veh/h				134	3	184	0	581	201	0	463	110
Peak Hour Factor				0.74	0.74	0.74	0.86	0.86	0.86	0.83	0.83	0.83
Percent Heavy Veh, %				2	2	2	0	2	2	0	2	2
Cap, veh/h				410	9	360	0	1406	601	0	1627	373
Arrive On Green				0.23	0.23	0.23	0.00	0.40	0.40	0.00	0.40	0.40
Sat Flow, veh/h				1744	39	1532	0	3647	1519	0	4282	943
Grp Volume(v), veh/h				137	0	184	0	581	201	0	380	193
Grp Sat Flow(s),veh/h/ln				1783	0	1532	0	1777	1519	0	1702	1652
Q Serve(g_s), s				2.2	0.0	3.5	0.0	4.0	3.1	0.0	2.6	2.7
Cycle Q Clear(g_c), s				2.2	0.0	3.5	0.0	4.0	3.1	0.0	2.6	2.7
Prop In Lane				0.98		1.00	0.00		1.00	0.00		0.57
Lane Grp Cap(c), veh/h				419	0	360	0	1406	601	0	1346	654
V/C Ratio(X)				0.33	0.00	0.51	0.00	0.41	0.33	0.00	0.28	0.30
Avail Cap(c_a), veh/h				2526	0	2169	0	6263	2677	0	5999	2912
HCM Platoon Ratio				1.00	1.00	1.00	1.00	1.00	1.00	1.00	1.00	1.00
Upstream Filter(I)				1.00	0.00	1.00	0.00	1.00	1.00	0.00	1.00	1.00
Uniform Delay (d), s/veh				10.7	0.0	11.3	0.0	7.4	7.1	0.0	7.0	7.0
Incr Delay (d2), s/veh				0.5	0.0	1.1	0.0	0.2	0.3	0.0	0.1	0.2
Initial Q Delay(d3),s/veh				0.0	0.0	0.0	0.0	0.0	0.0	0.0	0.0	0.0
%ile BackOfQ(50%),veh/ln				0.7	0.0	1.0	0.0	0.8	0.6	0.0	0.5	0.6
Unsig. Movement Delay, s/veh												
LnGrp Delay(d),s/veh				11.2	0.0	12.4	0.0	7.6	7.4	0.0	7.1	7.2
LnGrp LOS				B	A	B	A	A	A	A	A	A
Approach Vol, veh/h					321			782			573	
Approach Delay, s/veh					11.9			7.5			7.1	
Approach LOS					B			A			A	

Timer - Assigned Phs	2		6		8			
Phs Duration (G+Y+Rc), s	19.8		19.8		14.0			
Change Period (Y+Rc), s	6.4		6.4		6.1			
Max Green Setting (Gmax), s	59.6		59.6		47.9			
Max Q Clear Time (g_c+I1), s	6.0		4.7		5.5			
Green Ext Time (p_c), s	5.0		3.9		1.5			

Intersection Summary		
HCM 6th Ctrl Delay	8.2	
HCM 6th LOS	A	



Movement	EBL	EBT	EBR	WBL	WBT	WBR	NBL	NBT	NBR	SBL	SBT	SBR
Lane Configurations												
Traffic Volume (veh/h)	92	2	185	0	0	0	0	582	57	77	404	0
Future Volume (veh/h)	92	2	185	0	0	0	0	582	57	77	404	0
Initial Q (Qb), veh	0	0	0				0	0	0	0	0	0
Ped-Bike Adj(A_pbT)	1.00		0.93				1.00		0.95	1.00		1.00
Parking Bus, Adj	1.00	1.00	1.00				1.00	1.00	1.00	1.00	1.00	1.00
Work Zone On Approach		No						No			No	
Adj Sat Flow, veh/h/ln	1870	1870	1870				0	1870	1870	1870	1870	0
Adj Flow Rate, veh/h	111	2	223				0	677	66	105	553	0
Peak Hour Factor	0.83	0.83	0.83				0.86	0.86	0.86	0.73	0.73	0.73
Percent Heavy Veh, %	2	2	2				0	2	2	2	2	0
Cap, veh/h	330	6	492				0	1206	514	142	1926	0
Arrive On Green	0.19	0.19	0.19				0.00	0.34	0.34	0.08	0.54	0.00
Sat Flow, veh/h	1751	32	2608				0	3647	1513	1781	3647	0
Grp Volume(v), veh/h	113	0	223				0	677	66	105	553	0
Grp Sat Flow(s),veh/h/ln	1783	0	1304				0	1777	1513	1781	1777	0
Q Serve(g_s), s	2.5	0.0	3.5				0.0	7.2	1.4	2.7	3.9	0.0
Cycle Q Clear(g_c), s	2.5	0.0	3.5				0.0	7.2	1.4	2.7	3.9	0.0
Prop In Lane	0.98		1.00				0.00		1.00	1.00		0.00
Lane Grp Cap(c), veh/h	336	0	492				0	1206	514	142	1926	0
V/C Ratio(X)	0.34	0.00	0.45				0.00	0.56	0.13	0.74	0.29	0.00
Avail Cap(c_a), veh/h	1456	0	2130				0	3339	1422	779	5330	0
HCM Platoon Ratio	1.00	1.00	1.00				1.00	1.00	1.00	1.00	1.00	1.00
Upstream Filter(I)	1.00	0.00	1.00				0.00	1.00	1.00	1.00	1.00	0.00
Uniform Delay (d), s/veh	16.3	0.0	16.7				0.0	12.5	10.6	20.9	5.8	0.0
Incr Delay (d2), s/veh	0.6	0.0	0.7				0.0	0.4	0.1	7.2	0.1	0.0
Initial Q Delay(d3),s/veh	0.0	0.0	0.0				0.0	0.0	0.0	0.0	0.0	0.0
%ile BackOfQ(50%),veh/ln	1.0	0.0	1.0				0.0	2.2	0.4	1.2	0.9	0.0
Unsig. Movement Delay, s/veh												
LnGrp Delay(d),s/veh	16.9	0.0	17.4				0.0	12.9	10.7	28.1	5.8	0.0
LnGrp LOS	B	A	B				A	B	B	C	A	A
Approach Vol, veh/h		336						743			658	
Approach Delay, s/veh		17.2						12.7			9.4	
Approach LOS		B						B			A	

Timer - Assigned Phs	1	2		4		6
Phs Duration (G+Y+Rc), s	9.4	22.1		14.9		31.6
Change Period (Y+Rc), s	* 5.7	6.4		6.1		6.4
Max Green Setting (Gmax), s	* 3.8	43.6		37.9		69.6
Max Q Clear Time (g_c+I1), s	4.7	9.2		5.5		5.9
Green Ext Time (p_c), s	0.2	5.1		1.7		3.9

Intersection Summary	
HCM 6th Ctrl Delay	12.3
HCM 6th LOS	B

Notes

* HCM 6th computational engine requires equal clearance times for the phases crossing the barrier.



Movement	EBL	EBT	EBR	WBL	WBT	WBR	NBL	NBT	NBR	SBL	SBT	SBR
Lane Configurations												
Traffic Volume (veh/h)	76	96	36	2	96	64	59	86	1	126	71	34
Future Volume (veh/h)	76	96	36	2	96	64	59	86	1	126	71	34
Initial Q (Qb), veh	0	0	0	0	0	0	0	0	0	0	0	0
Ped-Bike Adj(A_pbT)	1.00		0.96	1.00		0.94	1.00		0.98	1.00		0.96
Parking Bus, Adj	1.00	1.00	1.00	1.00	1.00	1.00	1.00	1.00	1.00	1.00	1.00	1.00
Work Zone On Approach		No			No			No			No	
Adj Sat Flow, veh/h/ln	1870	1870	1870	1870	1870	1870	1870	1870	1870	1870	1870	1870
Adj Flow Rate, veh/h	96	122	46	3	128	85	82	119	1	233	131	63
Peak Hour Factor	0.79	0.79	0.79	0.75	0.75	0.75	0.72	0.72	0.72	0.54	0.54	0.54
Percent Heavy Veh, %	2	2	2	2	2	2	2	2	2	2	2	2
Cap, veh/h	124	341	277	7	218	175	106	1431	623	256	1144	516
Arrive On Green	0.07	0.18	0.18	0.00	0.12	0.12	0.06	0.40	0.40	0.14	0.49	0.49
Sat Flow, veh/h	1781	1870	1522	1781	1870	1497	1781	3554	1546	1781	2348	1059
Grp Volume(v), veh/h	96	122	46	3	128	85	82	119	1	233	97	97
Grp Sat Flow(s),veh/h/ln	1781	1870	1522	1781	1870	1497	1781	1777	1546	1781	1777	1631
Q Serve(g_s), s	3.8	4.1	1.8	0.1	4.7	3.9	3.3	1.5	0.0	9.3	2.1	2.4
Cycle Q Clear(g_c), s	3.8	4.1	1.8	0.1	4.7	3.9	3.3	1.5	0.0	9.3	2.1	2.4
Prop In Lane	1.00		1.00	1.00		1.00	1.00		1.00	1.00		0.65
Lane Grp Cap(c), veh/h	124	341	277	7	218	175	106	1431	623	256	865	794
V/C Ratio(X)	0.78	0.36	0.17	0.42	0.59	0.49	0.78	0.08	0.00	0.91	0.11	0.12
Avail Cap(c_a), veh/h	258	929	756	123	787	630	241	1431	623	256	865	794
HCM Platoon Ratio	1.00	1.00	1.00	1.00	1.00	1.00	1.00	1.00	1.00	1.00	1.00	1.00
Upstream Filter(I)	1.00	1.00	1.00	1.00	1.00	1.00	1.00	1.00	1.00	1.00	1.00	1.00
Uniform Delay (d), s/veh	33.2	25.9	25.0	36.0	30.4	30.0	33.6	13.4	12.9	30.6	10.1	10.1
Incr Delay (d2), s/veh	3.9	0.6	0.3	13.6	2.5	2.1	4.5	0.1	0.0	33.2	0.3	0.3
Initial Q Delay(d3),s/veh	0.0	0.0	0.0	0.0	0.0	0.0	0.0	0.0	0.0	0.0	0.0	0.0
%ile BackOfQ(50%),veh/ln	1.7	1.8	0.7	0.1	2.2	1.4	1.5	0.6	0.0	6.2	0.8	0.8
Unsig. Movement Delay, s/veh												
LnGrp Delay(d),s/veh	37.1	26.6	25.3	49.6	32.8	32.1	38.2	13.5	12.9	63.8	10.4	10.5
LnGrp LOS	D	C	C	D	C	C	D	B	B	E	B	B
Approach Vol, veh/h		264			216			202			427	
Approach Delay, s/veh		30.2			32.8			23.5			39.5	
Approach LOS		C			C			C			D	

Timer - Assigned Phs	1	2	3	4	5	6	7	8
Phs Duration (G+Y+Rc), s	8.9	40.4	9.6	13.6	15.0	34.3	4.9	18.3
Change Period (Y+Rc), s	4.6	5.1	4.6	5.1	4.6	5.1	4.6	5.1
Max Green Setting (Gmax), s	4.3	29.8	10.5	30.5	10.4	29.2	5.0	36.0
Max Q Clear Time (g_c+I1), s	5.3	4.4	5.8	6.7	11.3	3.5	2.1	6.1
Green Ext Time (p_c), s	0.0	1.6	0.0	1.0	0.0	0.9	0.0	0.8

Intersection Summary	
HCM 6th Ctrl Delay	33.1
HCM 6th LOS	C



Movement	EBL	EBT	EBR	WBL	WBT	WBR	NBL	NBT	NBR	SBL	SBT	SBR
Lane Configurations												
Traffic Volume (veh/h)	150	81	74	46	65	185	70	331	66	386	428	199
Future Volume (veh/h)	150	81	74	46	65	185	70	331	66	386	428	199
Initial Q (Qb), veh	0	0	0	0	0	0	0	0	0	0	0	0
Ped-Bike Adj(A_pbT)	1.00		0.96	1.00		0.96	1.00		0.96	1.00		0.97
Parking Bus, Adj	1.00	1.00	1.00	1.00	1.00	1.00	1.00	1.00	1.00	1.00	1.00	1.00
Work Zone On Approach		No			No			No			No	
Adj Sat Flow, veh/h/ln	1870	1870	1870	1870	1870	1870	1870	1870	1870	1870	1870	1870
Adj Flow Rate, veh/h	197	107	97	55	78	223	81	385	77	482	535	249
Peak Hour Factor	0.76	0.76	0.76	0.83	0.83	0.83	0.86	0.86	0.86	0.80	0.80	0.80
Percent Heavy Veh, %	2	2	2	2	2	2	2	2	2	2	2	2
Cap, veh/h	294	308	250	284	298	600	120	606	120	403	868	402
Arrive On Green	0.16	0.16	0.16	0.16	0.16	0.16	0.07	0.21	0.21	0.23	0.37	0.37
Sat Flow, veh/h	1781	1870	1517	1781	1870	1515	1781	2936	580	1781	2335	1083
Grp Volume(v), veh/h	197	107	97	55	78	223	81	231	231	482	407	377
Grp Sat Flow(s),veh/h/ln	1781	1870	1517	1781	1870	1515	1781	1777	1740	1781	1777	1642
Q Serve(g_s), s	11.3	5.5	6.2	2.9	4.0	11.5	4.8	12.9	13.2	24.6	20.3	20.4
Cycle Q Clear(g_c), s	11.3	5.5	6.2	2.9	4.0	11.5	4.8	12.9	13.2	24.6	20.3	20.4
Prop In Lane	1.00		1.00	1.00		1.00	1.00		0.33	1.00		0.66
Lane Grp Cap(c), veh/h	294	308	250	284	298	600	120	367	359	403	660	610
V/C Ratio(X)	0.67	0.35	0.39	0.19	0.26	0.37	0.68	0.63	0.64	1.20	0.62	0.62
Avail Cap(c_a), veh/h	540	567	460	589	619	860	210	488	478	403	696	643
HCM Platoon Ratio	1.00	1.00	1.00	1.00	1.00	1.00	1.00	1.00	1.00	1.00	1.00	1.00
Upstream Filter(I)	1.00	1.00	1.00	1.00	1.00	1.00	1.00	1.00	1.00	1.00	1.00	1.00
Uniform Delay (d), s/veh	42.7	40.3	40.5	39.7	40.1	24.1	49.6	39.4	39.5	42.1	27.9	27.9
Incr Delay (d2), s/veh	3.8	1.0	1.4	0.1	0.2	0.1	2.5	6.4	6.8	110.5	3.5	3.9
Initial Q Delay(d3),s/veh	0.0	0.0	0.0	0.0	0.0	0.0	0.0	0.0	0.0	0.0	0.0	0.0
%ile BackOfQ(50%),veh/ln	5.2	2.6	2.4	1.3	1.8	4.0	2.2	6.1	6.2	22.8	8.9	8.3
Unsig. Movement Delay, s/veh												
LnGrp Delay(d),s/veh	46.4	41.2	41.9	39.8	40.3	24.2	52.1	45.8	46.3	152.6	31.4	31.8
LnGrp LOS	D	D	D	D	D	C	D	D	D	F	C	C
Approach Vol, veh/h		401			356			543			1266	
Approach Delay, s/veh		44.0			30.2			47.0			77.7	
Approach LOS		D			C			D			E	

Timer - Assigned Phs	1	2		4	5	6		8
Phs Duration (G+Y+Rc), s	12.0	47.7		23.7	30.0	29.8		25.3
Change Period (Y+Rc), s	* 4.7	* 7.3		6.4	5.4	7.3		7.4
Max Green Setting (Gmax), s	* 13	* 43		36.0	24.6	29.9		33.0
Max Q Clear Time (g_c+I1), s	6.8	22.4		13.5	26.6	15.2		13.3
Green Ext Time (p_c), s	0.0	10.3		0.7	0.0	4.9		2.1

Intersection Summary	
HCM 6th Ctrl Delay	59.3
HCM 6th LOS	E

Notes

* HCM 6th computational engine requires equal clearance times for the phases crossing the barrier.

Intersection	
Int Delay, s/veh	1

Movement	EBL	EBR	NBL	NBT	SBT	SBR
Lane Configurations						
Traffic Vol, veh/h	4	101	104	684	395	11
Future Vol, veh/h	4	101	104	684	395	11
Conflicting Peds, #/hr	10	10	10	0	0	10
Sign Control	Free	Free	Free	Free	Stop	Stop
RT Channelized	-	None	-	None	-	None
Storage Length	0	-	-	-	-	-
Veh in Median Storage, #	2	-	-	0	0	-
Grade, %	0	-	-	0	0	-
Peak Hour Factor	63	63	70	70	75	75
Heavy Vehicles, %	2	2	2	2	2	2
Mvmt Flow	6	160	149	977	527	15

Major/Minor	Major1		Minor2	
Conflicting Flow All	10	0	1285	20
Stage 1	-	-	10	-
Stage 2	-	-	1275	-
Critical Hdwy	4.14	-	6.54	6.94
Critical Hdwy Stg 1	-	-	-	-
Critical Hdwy Stg 2	-	-	5.54	-
Follow-up Hdwy	2.22	-	4.02	3.32
Pot Cap-1 Maneuver	1608	-	~ 163	1053
Stage 1	-	-	-	-
Stage 2	-	-	~ 236	-
Platoon blocked, %		-		
Mov Cap-1 Maneuver	1593	-	0	1033
Mov Cap-2 Maneuver	-	-	0	-
Stage 1	-	-	0	-
Stage 2	-	-	0	-

Approach	NB	SB
HCM Control Delay, s	1.5	
HCM LOS		-

Minor Lane/Major Mvmt	NBL	NBT	SBLn1	SBLn2
Capacity (veh/h)	1593	-	-	1033
HCM Lane V/C Ratio	0.093	-	-	0.269
HCM Control Delay (s)	7.5	0.6	-	9.8
HCM Lane LOS	A	A	-	A
HCM 95th %tile Q(veh)	0.3	-	-	1.1

Notes			
~: Volume exceeds capacity	$: Delay exceeds 300s	+: Computation Not Defined	*: All major volume in platoon



Movement	WBL	WBR	NBT	NBR	SBL	SBT
Lane Configurations						
Traffic Volume (veh/h)	12	71	435	56	79	234
Future Volume (veh/h)	12	71	435	56	79	234
Initial Q (Qb), veh	0	0	0	0	0	0
Ped-Bike Adj(A_pbT)	1.00	1.00		0.96	1.00	
Parking Bus, Adj	1.00	1.00	1.00	1.00	1.00	1.00
Work Zone On Approach	No		No			No
Adj Sat Flow, veh/h/ln	1870	1870	1870	1870	1870	1870
Adj Flow Rate, veh/h	13	78	558	72	92	272
Peak Hour Factor	0.91	0.91	0.78	0.78	0.86	0.86
Percent Heavy Veh, %	2	2	2	2	2	2
Cap, veh/h	153	136	1348	173	205	1190
Arrive On Green	0.09	0.09	0.43	0.43	0.11	0.64
Sat Flow, veh/h	1781	1585	3243	405	1781	1870
Grp Volume(v), veh/h	13	78	314	316	92	272
Grp Sat Flow(s),veh/h/ln	1781	1585	1777	1778	1781	1870
Q Serve(g_s), s	0.3	2.4	6.2	6.2	2.4	3.1
Cycle Q Clear(g_c), s	0.3	2.4	6.2	6.2	2.4	3.1
Prop In Lane	1.00	1.00		0.23	1.00	
Lane Grp Cap(c), veh/h	153	136	760	761	205	1190
V/C Ratio(X)	0.09	0.57	0.41	0.42	0.45	0.23
Avail Cap(c_a), veh/h	983	875	2547	2548	1107	4070
HCM Platoon Ratio	1.00	1.00	1.00	1.00	1.00	1.00
Upstream Filter(I)	1.00	1.00	1.00	1.00	1.00	1.00
Uniform Delay (d), s/veh	21.2	22.1	10.0	10.0	20.8	3.9
Incr Delay (d2), s/veh	0.2	3.8	1.3	1.3	0.6	0.4
Initial Q Delay(d3),s/veh	0.0	0.0	0.0	0.0	0.0	0.0
%ile BackOfQ(50%),veh/ln	0.1	2.2	2.1	2.1	0.9	0.7
Unsig. Movement Delay, s/veh						
LnGrp Delay(d),s/veh	21.4	25.9	11.3	11.3	21.4	4.3
LnGrp LOS	C	C	B	B	C	A
Approach Vol, veh/h	91		630			364
Approach Delay, s/veh	25.3		11.3			8.6
Approach LOS	C		B			A

Timer - Assigned Phs		2		4	5	6
Phs Duration (G+Y+Rc), s		39.8		10.5	10.5	29.4
Change Period (Y+Rc), s		* 7.8		6.2	* 4.7	7.8
Max Green Setting (Gmax), s		* 1.1E2		27.8	* 31	72.2
Max Q Clear Time (g_c+I1), s		5.1		4.4	4.4	8.2
Green Ext Time (p_c), s		4.7		0.2	0.1	12.2

Intersection Summary	
HCM 6th Ctrl Delay	11.6
HCM 6th LOS	B

Notes

* HCM 6th computational engine requires equal clearance times for the phases crossing the barrier.

Intersection	
Int Delay, s/veh	2.6

Movement	EBT	EBR	WBL	WBT	NBL	NBR
Lane Configurations						
Traffic Vol, veh/h	81	14	12	141	26	44
Future Vol, veh/h	81	14	12	141	26	44
Conflicting Peds, #/hr	0	10	10	0	10	10
Sign Control	Free	Free	Free	Free	Stop	Stop
RT Channelized	-	None	-	None	-	None
Storage Length	-	-	-	-	0	-
Veh in Median Storage, #	0	-	-	0	0	-
Grade, %	0	-	-	0	0	-
Peak Hour Factor	91	91	57	57	70	70
Heavy Vehicles, %	2	2	2	2	2	2
Mvmt Flow	89	15	21	247	37	63

Major/Minor	Major1		Major2		Minor1	
Conflicting Flow All	0	0	114	0	406	117
Stage 1	-	-	-	-	107	-
Stage 2	-	-	-	-	299	-
Critical Hdwy	-	-	4.12	-	6.42	6.22
Critical Hdwy Stg 1	-	-	-	-	5.42	-
Critical Hdwy Stg 2	-	-	-	-	5.42	-
Follow-up Hdwy	-	-	2.218	-	3.518	3.318
Pot Cap-1 Maneuver	-	-	1475	-	601	935
Stage 1	-	-	-	-	917	-
Stage 2	-	-	-	-	752	-
Platoon blocked, %	-	-		-		
Mov Cap-1 Maneuver	-	-	1461	-	579	917
Mov Cap-2 Maneuver	-	-	-	-	579	-
Stage 1	-	-	-	-	908	-
Stage 2	-	-	-	-	732	-

Approach	EB	WB	NB
HCM Control Delay, s	0	0.6	10.5
HCM LOS			B

Minor Lane/Major Mvmt	NBLn1	EBT	EBR	WBL	WBT
Capacity (veh/h)	754	-	-	1461	-
HCM Lane V/C Ratio	0.133	-	-	0.014	-
HCM Control Delay (s)	10.5	-	-	7.5	0
HCM Lane LOS	B	-	-	A	A
HCM 95th %tile Q(veh)	0.5	-	-	0	-

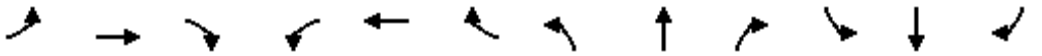

Movement	EBL	EBT	EBR	WBL	WBT	WBR	NBL	NBT	NBR	SBL	SBT	SBR
Lane Configurations												
Traffic Volume (veh/h)	48	49	28	5	51	87	32	452	12	102	238	74
Future Volume (veh/h)	48	49	28	5	51	87	32	452	12	102	238	74
Initial Q (Qb), veh	0	0	0	0	0	0	0	0	0	0	0	0
Ped-Bike Adj(A_pbT)	1.00		0.97	1.00		1.00	1.00		0.97	1.00		0.97
Parking Bus, Adj	1.00	1.00	1.00	1.00	1.00	1.00	1.00	1.00	1.00	1.00	1.00	1.00
Work Zone On Approach		No			No			No			No	
Adj Sat Flow, veh/h/ln	1870	1870	1870	1870	1870	1870	1870	1870	1870	1870	1870	1870
Adj Flow Rate, veh/h	51	52	29	6	64	0	38	532	14	132	309	96
Peak Hour Factor	0.95	0.95	0.95	0.80	0.80	0.80	0.85	0.85	0.85	0.77	0.77	0.77
Percent Heavy Veh, %	2	2	2	2	2	2	2	2	2	2	2	2
Cap, veh/h	88	540	274	14	705		72	993	429	176	901	274
Arrive On Green	0.05	0.24	0.24	0.01	0.20	0.00	0.04	0.28	0.28	0.10	0.34	0.34
Sat Flow, veh/h	1781	2252	1143	1781	3554	1585	1781	3554	1537	1781	2664	810
Grp Volume(v), veh/h	51	40	41	6	64	0	38	532	14	132	204	201
Grp Sat Flow(s),veh/h/ln	1781	1777	1618	1781	1777	1585	1781	1777	1537	1781	1777	1698
Q Serve(g_s), s	1.5	0.9	1.1	0.2	0.8	0.0	1.1	6.8	0.4	3.9	4.6	4.8
Cycle Q Clear(g_c), s	1.5	0.9	1.1	0.2	0.8	0.0	1.1	6.8	0.4	3.9	4.6	4.8
Prop In Lane	1.00		0.71	1.00		1.00	1.00		1.00	1.00		0.48
Lane Grp Cap(c), veh/h	88	426	388	14	705		72	993	429	176	601	574
V/C Ratio(X)	0.58	0.09	0.11	0.42	0.09		0.53	0.54	0.03	0.75	0.34	0.35
Avail Cap(c_a), veh/h	510	1483	1350	245	2437		411	3250	1406	940	2153	2058
HCM Platoon Ratio	1.00	1.00	1.00	1.00	1.00	1.00	1.00	1.00	1.00	1.00	1.00	1.00
Upstream Filter(I)	1.00	1.00	1.00	1.00	1.00	0.00	1.00	1.00	1.00	1.00	1.00	1.00
Uniform Delay (d), s/veh	25.0	15.9	15.9	26.6	17.6	0.0	25.3	16.4	14.1	23.6	13.3	13.4
Incr Delay (d2), s/veh	5.8	0.1	0.1	18.7	0.1	0.0	5.9	0.5	0.0	6.2	0.3	0.4
Initial Q Delay(d3),s/veh	0.0	0.0	0.0	0.0	0.0	0.0	0.0	0.0	0.0	0.0	0.0	0.0
%ile BackOfQ(50%),veh/ln	0.7	0.3	0.4	0.1	0.3	0.0	0.5	2.4	0.1	1.7	1.6	1.6
Unsig. Movement Delay, s/veh												
LnGrp Delay(d),s/veh	30.9	16.0	16.1	45.3	17.7	0.0	31.3	16.9	14.1	29.8	13.6	13.7
LnGrp LOS	C	B	B	D	B		C	B	B	C	B	B
Approach Vol, veh/h		132			70	A		584			537	
Approach Delay, s/veh		21.8			20.0			17.8			17.6	
Approach LOS		C			C			B			B	

Timer - Assigned Phs	1	2	3	4	5	6	7	8
Phs Duration (G+Y+Rc), s	9.9	20.8	5.0	18.0	6.8	24.0	7.3	15.8
Change Period (Y+Rc), s	4.6	5.8	4.6	5.1	4.6	5.8	4.6	5.1
Max Green Setting (Gmax), s	28.4	49.2	7.4	44.9	12.4	65.2	15.4	36.9
Max Q Clear Time (g_c+I1), s	5.9	8.8	2.2	3.1	3.1	6.8	3.5	2.8
Green Ext Time (p_c), s	0.3	3.7	0.0	0.4	0.0	2.5	0.1	0.3

Intersection Summary	
HCM 6th Ctrl Delay	18.2
HCM 6th LOS	B

Notes

Unsignalized Delay for [WBR] is excluded from calculations of the approach delay and intersection delay.

Intersection	
Intersection Delay, s/veh	91.8
Intersection LOS	F

Movement	EBL	EBT	EBR	WBL	WBT	WBR	NBL	NBT	NBR	SBL	SBT	SBR
Lane Configurations												
Traffic Vol, veh/h	131	159	26	34	239	23	49	127	105	62	49	226
Future Vol, veh/h	131	159	26	34	239	23	49	127	105	62	49	226
Peak Hour Factor	0.69	0.69	0.69	0.73	0.73	0.73	0.67	0.67	0.67	0.77	0.77	0.77
Heavy Vehicles, %	2	2	2	2	2	2	2	2	2	2	2	2
Mvmt Flow	190	230	38	47	327	32	73	190	157	81	64	294
Number of Lanes	0	1	1	0	1	0	0	1	0	0	1	1

Approach	EB	WB	NB	SB
Opposing Approach	WB	EB	SB	NB
Opposing Lanes	1	2	2	1
Conflicting Approach Left	SB	NB	EB	WB
Conflicting Lanes Left	2	1	2	1
Conflicting Approach Right	NB	SB	WB	EB
Conflicting Lanes Right	1	2	1	2
HCM Control Delay	108.8	112.2	117	30.9
HCM LOS	F	F	F	D

Lane	NBLn1	EBLn1	EBLn2	WBLn1	SBLn1	SBLn2
Vol Left, %	17%	45%	0%	11%	56%	0%
Vol Thru, %	45%	55%	0%	81%	44%	0%
Vol Right, %	37%	0%	100%	8%	0%	100%
Sign Control	Stop	Stop	Stop	Stop	Stop	Stop
Traffic Vol by Lane	281	290	26	296	111	226
LT Vol	49	131	0	34	62	0
Through Vol	127	159	0	239	49	0
RT Vol	105	0	26	23	0	226
Lane Flow Rate	419	420	38	405	144	294
Geometry Grp	6	7	7	6	7	7
Degree of Util (X)	1.118	1.121	0.091	1.1	0.397	0.736
Departure Headway (Hd)	10.393	10.331	9.358	10.65	10.995	9.962
Convergence, Y/N	Yes	Yes	Yes	Yes	Yes	Yes
Cap	352	353	385	345	330	367
Service Time	8.393	8.031	7.058	8.65	8.695	7.662
HCM Lane V/C Ratio	1.19	1.19	0.099	1.174	0.436	0.801
HCM Control Delay	117	117.4	13	112.2	20.8	35.9
HCM Lane LOS	F	F	B	F	C	E
HCM 95th-tile Q	14.9	15	0.3	14.1	1.8	5.7

Intersection	
Intersection Delay, s/veh	128.8
Intersection LOS	F

Movement	EBL	EBT	EBR	WBL	WBT	WBR	NBL	NBT	NBR	SBL	SBT	SBR
Lane Configurations												
Traffic Vol, veh/h	53	249	23	0	218	106	22	178	4	129	140	56
Future Vol, veh/h	53	249	23	0	218	106	22	178	4	129	140	56
Peak Hour Factor	0.68	0.68	0.68	0.70	0.70	0.70	0.64	0.64	0.64	0.69	0.69	0.69
Heavy Vehicles, %	2	2	2	2	2	2	2	2	2	2	2	2
Mvmt Flow	78	366	34	0	311	151	34	278	6	187	203	81
Number of Lanes	0	1	0	0	1	0	0	1	0	0	1	0

Approach	EB	WB	NB	SB
Opposing Approach	WB	EB	SB	NB
Opposing Lanes	1	1	1	1
Conflicting Approach Left	SB	NB	EB	WB
Conflicting Lanes Left	1	1	1	1
Conflicting Approach Right	NB	SB	WB	EB
Conflicting Lanes Right	1	1	1	1
HCM Control Delay	155.5	132.4	55.5	147.9
HCM LOS	F	F	F	F

Lane	NBLn1	EBLn1	WBLn1	SBLn1
Vol Left, %	11%	16%	0%	40%
Vol Thru, %	87%	77%	67%	43%
Vol Right, %	2%	7%	33%	17%
Sign Control	Stop	Stop	Stop	Stop
Traffic Vol by Lane	204	325	324	325
LT Vol	22	53	0	129
Through Vol	178	249	218	140
RT Vol	4	23	106	56
Lane Flow Rate	319	478	463	471
Geometry Grp	1	1	1	1
Degree of Util (X)	0.851	1.226	1.163	1.206
Departure Headway (Hd)	11.549	10.402	10.377	10.364
Convergence, Y/N	Yes	Yes	Yes	Yes
Cap	316	354	352	353
Service Time	9.549	8.402	8.377	8.364
HCM Lane V/C Ratio	1.009	1.35	1.315	1.334
HCM Control Delay	55.5	155.5	132.4	147.9
HCM Lane LOS	F	F	F	F
HCM 95th-tile Q	7.5	18.4	16.3	17.8

Intersection	
Intersection Delay, s/veh	82.8
Intersection LOS	F

Movement	EBL	EBT	EBR	WBL	WBT	WBR	NBL	NBT	NBR	SBL	SBT	SBR
Lane Configurations												
Traffic Vol, veh/h	105	205	14	25	236	85	8	184	9	50	164	190
Future Vol, veh/h	105	205	14	25	236	85	8	184	9	50	164	190
Peak Hour Factor	0.61	0.61	0.61	0.70	0.70	0.70	0.87	0.87	0.87	0.76	0.76	0.76
Heavy Vehicles, %	2	2	2	2	2	2	2	2	2	2	2	2
Mvmt Flow	172	336	23	36	337	121	9	211	10	66	216	250
Number of Lanes	1	1	0	0	1	0	1	1	0	1	1	0

Approach	EB	WB	NB	SB
Opposing Approach	WB	EB	SB	NB
Opposing Lanes	1	2	2	2
Conflicting Approach Left	SB	NB	EB	WB
Conflicting Lanes Left	2	2	2	1
Conflicting Approach Right	NB	SB	WB	EB
Conflicting Lanes Right	2	2	1	2
HCM Control Delay	42.5	145.3	26.6	89.5
HCM LOS	E	F	D	F

Lane	NBLn1	NBLn2	EBLn1	EBLn2	WBLn1	SBLn1	SBLn2
Vol Left, %	100%	0%	100%	0%	7%	100%	0%
Vol Thru, %	0%	95%	0%	94%	68%	0%	46%
Vol Right, %	0%	5%	0%	6%	25%	0%	54%
Sign Control	Stop	Stop	Stop	Stop	Stop	Stop	Stop
Traffic Vol by Lane	8	193	105	219	346	50	354
LT Vol	8	0	105	0	25	50	0
Through Vol	0	184	0	205	236	0	164
RT Vol	0	9	0	14	85	0	190
Lane Flow Rate	9	222	172	359	494	66	466
Geometry Grp	7	7	7	7	6	7	7
Degree of Util (X)	0.026	0.589	0.448	0.881	1.211	0.169	1.086
Departure Headway (Hd)	11.017	10.452	10.192	9.621	9.286	9.922	9.001
Convergence, Y/N	Yes	Yes	Yes	Yes	Yes	Yes	Yes
Cap	327	348	356	381	395	364	405
Service Time	8.717	8.152	7.892	7.321	7.286	7.622	6.701
HCM Lane V/C Ratio	0.028	0.638	0.483	0.942	1.251	0.181	1.151
HCM Control Delay	14	27.1	20.9	52.9	145.3	14.6	100.1
HCM Lane LOS	B	D	C	F	F	B	F
HCM 95th-tile Q	0.1	3.6	2.2	8.7	19.3	0.6	15.1



Movement	EBL	EBT	EBR	WBL	WBT	WBR	NBL	NBT	NBR	SBL	SBT	SBR
Lane Configurations												
Traffic Volume (veh/h)	68	167	22	4	230	80	11	188	1	42	132	106
Future Volume (veh/h)	68	167	22	4	230	80	11	188	1	42	132	106
Initial Q (Qb), veh	0	0	0	0	0	0	0	0	0	0	0	0
Ped-Bike Adj(A_pbT)	0.99		0.95	0.99		0.95	1.00		0.95	1.00		0.95
Parking Bus, Adj	1.00	1.00	1.00	1.00	1.00	1.00	1.00	1.00	1.00	1.00	1.00	1.00
Work Zone On Approach		No			No			No			No	
Adj Sat Flow, veh/h/ln	1870	1870	1870	1870	1870	1870	1870	1870	1870	1870	1870	1870
Adj Flow Rate, veh/h	100	246	32	6	343	119	16	272	1	46	143	115
Peak Hour Factor	0.68	0.68	0.68	0.67	0.67	0.67	0.69	0.69	0.69	0.92	0.92	0.92
Percent Heavy Veh, %	2	2	2	2	2	2	2	2	2	2	2	2
Cap, veh/h	172	353	41	64	442	151	49	480	2	112	275	221
Arrive On Green	0.34	0.34	0.34	0.34	0.34	0.34	0.03	0.26	0.26	0.06	0.29	0.29
Sat Flow, veh/h	281	1043	122	6	1306	448	1781	1862	7	1781	936	753
Grp Volume(v), veh/h	378	0	0	468	0	0	16	0	273	46	0	258
Grp Sat Flow(s),veh/h/ln	1447	0	0	1760	0	0	1781	0	1869	1781	0	1689
Q Serve(g_s), s	0.0	0.0	0.0	0.0	0.0	0.0	0.5	0.0	7.5	1.5	0.0	7.5
Cycle Q Clear(g_c), s	13.8	0.0	0.0	14.1	0.0	0.0	0.5	0.0	7.5	1.5	0.0	7.5
Prop In Lane	0.26		0.08	0.01		0.25	1.00		0.00	1.00		0.45
Lane Grp Cap(c), veh/h	567	0	0	657	0	0	49	0	482	112	0	495
V/C Ratio(X)	0.67	0.00	0.00	0.71	0.00	0.00	0.33	0.00	0.57	0.41	0.00	0.52
Avail Cap(c_a), veh/h	1884	0	0	2247	0	0	281	0	1411	372	0	1350
HCM Platoon Ratio	1.00	1.00	1.00	1.00	1.00	1.00	1.00	1.00	1.00	1.00	1.00	1.00
Upstream Filter(I)	1.00	0.00	0.00	1.00	0.00	0.00	1.00	0.00	1.00	1.00	0.00	1.00
Uniform Delay (d), s/veh	17.0	0.0	0.0	17.6	0.0	0.0	28.1	0.0	19.0	26.6	0.0	17.4
Incr Delay (d2), s/veh	1.4	0.0	0.0	1.4	0.0	0.0	1.4	0.0	4.8	0.9	0.0	3.9
Initial Q Delay(d3),s/veh	0.0	0.0	0.0	0.0	0.0	0.0	0.0	0.0	0.0	0.0	0.0	0.0
%ile BackOfQ(50%),veh/ln	4.2	0.0	0.0	5.3	0.0	0.0	0.2	0.0	3.5	0.6	0.0	3.0
Unsig. Movement Delay, s/veh												
LnGrp Delay(d),s/veh	18.3	0.0	0.0	19.0	0.0	0.0	29.6	0.0	23.8	27.5	0.0	21.3
LnGrp LOS	B	A	A	B	A	A	C	A	C	C	A	C
Approach Vol, veh/h		378			468			289			304	
Approach Delay, s/veh		18.3			19.0			24.1			22.2	
Approach LOS		B			B			C			C	

Timer - Assigned Phs	1	2		4	5	6		8
Phs Duration (G+Y+Rc), s	6.3	25.2		27.4	8.4	23.1		27.4
Change Period (Y+Rc), s	* 4.7	7.9		7.5	* 4.7	* 7.9		7.5
Max Green Setting (Gmax), s	* 9.3	47.1		73.5	* 12	* 45		73.5
Max Q Clear Time (g_c+I1), s	2.5	9.5		16.1	3.5	9.5		15.8
Green Ext Time (p_c), s	0.0	5.2		3.6	0.0	5.2		3.1

Intersection Summary		
HCM 6th Ctrl Delay	20.5	
HCM 6th LOS	C	

Notes

* HCM 6th computational engine requires equal clearance times for the phases crossing the barrier.

Intersection	
Int Delay, s/veh	2.7

Movement	EBL	EBT	EBR	WBL	WBT	WBR	NBL	NBT	NBR	SBL	SBT	SBR
Lane Configurations		↕			↕			↕			↕	
Traffic Vol, veh/h	15	193	0	0	272	38	0	0	0	35	0	37
Future Vol, veh/h	15	193	0	0	272	38	0	0	0	35	0	37
Conflicting Peds, #/hr	10	0	10	10	0	10	10	0	10	10	0	10
Sign Control	Free	Free	Free	Free	Free	Free	Stop	Stop	Stop	Stop	Stop	Stop
RT Channelized	-	-	None	-	-	None	-	-	None	-	-	None
Storage Length	-	-	-	-	-	-	-	-	-	-	-	-
Veh in Median Storage, #	-	0	-	-	0	-	-	0	-	-	0	-
Grade, %	-	0	-	-	0	-	-	0	-	-	0	-
Peak Hour Factor	75	75	92	92	77	77	92	92	92	57	92	57
Heavy Vehicles, %	2	2	2	2	2	2	2	2	2	2	2	2
Mvmt Flow	20	257	0	0	353	49	0	0	0	61	0	65

Major/Minor	Major1			Major2			Minor1			Minor2		
Conflicting Flow All	412	0	0	267	0	0	727	719	277	695	695	398
Stage 1	-	-	-	-	-	-	307	307	-	388	388	-
Stage 2	-	-	-	-	-	-	420	412	-	307	307	-
Critical Hdwy	4.12	-	-	4.12	-	-	7.12	6.52	6.22	7.12	6.52	6.22
Critical Hdwy Stg 1	-	-	-	-	-	-	6.12	5.52	-	6.12	5.52	-
Critical Hdwy Stg 2	-	-	-	-	-	-	6.12	5.52	-	6.12	5.52	-
Follow-up Hdwy	2.218	-	-	2.218	-	-	3.518	4.018	3.318	3.518	4.018	3.318
Pot Cap-1 Maneuver	1147	-	-	1297	-	-	339	354	762	357	366	652
Stage 1	-	-	-	-	-	-	703	661	-	636	609	-
Stage 2	-	-	-	-	-	-	611	594	-	703	661	-
Platoon blocked, %		-	-		-	-						
Mov Cap-1 Maneuver	1136	-	-	1285	-	-	294	340	748	345	351	640
Mov Cap-2 Maneuver	-	-	-	-	-	-	294	340	-	345	351	-
Stage 1	-	-	-	-	-	-	682	641	-	617	603	-
Stage 2	-	-	-	-	-	-	544	588	-	682	641	-

Approach	EB	WB	NB	SB
HCM Control Delay, s	0.6	0	0	16
HCM LOS			A	C

Minor Lane/Major Mvmt	NBLn1	EBL	EBT	EBR	WBL	WBT	WBR	SBLn1
Capacity (veh/h)	-	1136	-	-	1285	-	-	452
HCM Lane V/C Ratio	-	0.018	-	-	-	-	-	0.279
HCM Control Delay (s)	0	8.2	0	-	0	-	-	16
HCM Lane LOS	A	A	A	-	A	-	-	C
HCM 95th %tile Q(veh)	-	0.1	-	-	0	-	-	1.1

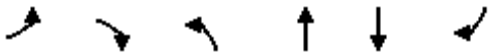

Movement	EBL	EBR	NBL	NBT	SBT	SBR
Lane Configurations						
Traffic Volume (veh/h)	61	170	254	521	207	53
Future Volume (veh/h)	61	170	254	521	207	53
Initial Q (Qb), veh	0	0	0	0	0	0
Ped-Bike Adj(A_pbT)	1.00	1.00	1.00			0.95
Parking Bus, Adj	1.00	1.00	1.00	1.00	1.00	1.00
Work Zone On Approach	No			No	No	
Adj Sat Flow, veh/h/ln	1870	1870	1870	1870	1870	1870
Adj Flow Rate, veh/h	74	207	310	635	256	65
Peak Hour Factor	0.82	0.82	0.82	0.82	0.81	0.81
Percent Heavy Veh, %	2	2	2	2	2	2
Cap, veh/h	273	602	404	1089	368	94
Arrive On Green	0.15	0.15	0.23	0.58	0.26	0.26
Sat Flow, veh/h	1781	1585	1781	1870	1421	361
Grp Volume(v), veh/h	74	207	310	635	0	321
Grp Sat Flow(s),veh/h/ln	1781	1585	1781	1870	0	1782
Q Serve(g_s), s	1.5	3.9	6.8	8.9	0.0	6.8
Cycle Q Clear(g_c), s	1.5	3.9	6.8	8.9	0.0	6.8
Prop In Lane	1.00	1.00	1.00			0.20
Lane Grp Cap(c), veh/h	273	602	404	1089	0	462
V/C Ratio(X)	0.27	0.34	0.77	0.58	0.00	0.69
Avail Cap(c_a), veh/h	857	1122	2400	5354	0	2529
HCM Platoon Ratio	1.00	1.00	1.00	1.00	1.00	1.00
Upstream Filter(I)	1.00	1.00	1.00	1.00	0.00	1.00
Uniform Delay (d), s/veh	15.6	9.2	15.0	5.5	0.0	13.9
Incr Delay (d2), s/veh	0.5	0.3	3.1	0.5	0.0	1.9
Initial Q Delay(d3),s/veh	0.0	0.0	0.0	0.0	0.0	0.0
%ile BackOfQ(50%),veh/ln	0.6	3.9	2.4	1.6	0.0	2.3
Unsig. Movement Delay, s/veh						
LnGrp Delay(d),s/veh	16.1	9.5	18.1	6.0	0.0	15.8
LnGrp LOS	B	A	B	A	A	B
Approach Vol, veh/h	281			945	321	
Approach Delay, s/veh	11.3			10.0	15.8	
Approach LOS	B			A	B	

Timer - Assigned Phs		2		4	5	6
Phs Duration (G+Y+Rc), s		30.2		11.4	13.4	16.8
Change Period (Y+Rc), s		6.0		5.0	4.0	6.0
Max Green Setting (Gmax), s		119.0		20.0	56.0	59.0
Max Q Clear Time (g_c+I1), s		10.9		5.9	8.8	8.8
Green Ext Time (p_c), s		4.6		0.8	0.9	2.0

Intersection Summary		
HCM 6th Ctrl Delay		11.4
HCM 6th LOS		B



Movement	WBL	WBR	NBT	NBR	SBL	SBT
Lane Configurations						
Traffic Volume (veh/h)	36	34	545	37	7	224
Future Volume (veh/h)	36	34	545	37	7	224
Initial Q (Qb), veh	0	0	0	0	0	0
Ped-Bike Adj(A_pbT)	1.00	1.00		0.96	1.00	
Parking Bus, Adj	1.00	1.00	1.00	1.00	1.00	1.00
Work Zone On Approach	No		No			No
Adj Sat Flow, veh/h/ln	1870	1870	1870	1870	1870	1870
Adj Flow Rate, veh/h	54	51	673	46	9	273
Peak Hour Factor	0.67	0.67	0.81	0.81	0.82	0.82
Percent Heavy Veh, %	2	2	2	2	2	2
Cap, veh/h	156	158	883	60	21	1173
Arrive On Green	0.09	0.09	0.51	0.51	0.01	0.63
Sat Flow, veh/h	1781	1585	1726	118	1781	1870
Grp Volume(v), veh/h	54	51	0	719	9	273
Grp Sat Flow(s),veh/h/ln	1781	1585	0	1844	1781	1870
Q Serve(g_s), s	1.1	1.2	0.0	12.0	0.2	2.5
Cycle Q Clear(g_c), s	1.1	1.2	0.0	12.0	0.2	2.5
Prop In Lane	1.00	1.00		0.06	1.00	
Lane Grp Cap(c), veh/h	156	158	0	943	21	1173
V/C Ratio(X)	0.35	0.32	0.00	0.76	0.42	0.23
Avail Cap(c_a), veh/h	693	635	0	5260	462	6014
HCM Platoon Ratio	1.00	1.00	1.00	1.00	1.00	1.00
Upstream Filter(I)	1.00	1.00	0.00	1.00	1.00	1.00
Uniform Delay (d), s/veh	16.6	16.2	0.0	7.5	18.9	3.1
Incr Delay (d2), s/veh	1.3	1.2	0.0	1.3	12.8	0.1
Initial Q Delay(d3),s/veh	0.0	0.0	0.0	0.0	0.0	0.0
%ile BackOfQ(50%),veh/ln	0.4	0.4	0.0	2.6	0.1	0.2
Unsig. Movement Delay, s/veh						
LnGrp Delay(d),s/veh	17.9	17.3	0.0	8.8	31.8	3.2
LnGrp LOS	B	B	A	A	C	A
Approach Vol, veh/h	105		719			282
Approach Delay, s/veh	17.6		8.8			4.1
Approach LOS	B		A			A

Timer - Assigned Phs	1	2				6	8
Phs Duration (G+Y+Rc), s	4.5	25.7				30.2	8.4
Change Period (Y+Rc), s	4.0	6.0				6.0	5.0
Max Green Setting (Gmax), s	10.0	110.0				124.0	15.0
Max Q Clear Time (g_c+I1), s	2.2	14.0				4.5	3.2
Green Ext Time (p_c), s	0.0	5.7				1.6	0.2

Intersection Summary	
HCM 6th Ctrl Delay	8.5
HCM 6th LOS	A



Movement	EBL	EBT	EBR	WBL	WBT	WBR	NBL	NBT	NBR	SBL	SBT	SBR
Lane Configurations												
Traffic Volume (veh/h)	1	40	2	23	63	128	4	23	43	16	4	3
Future Volume (veh/h)	1	40	2	23	63	128	4	23	43	16	4	3
Initial Q (Qb), veh	0	0	0	0	0	0	0	0	0	0	0	0
Ped-Bike Adj(A_pbT)	1.00		0.88	1.00		0.92	0.99		0.98	1.00		0.96
Parking Bus, Adj	1.00	1.00	1.00	1.00	1.00	1.00	1.00	1.00	1.00	1.00	1.00	1.00
Work Zone On Approach		No			No			No			No	
Adj Sat Flow, veh/h/ln	1870	1870	1870	1870	1870	1870	1870	1870	1870	1870	1870	1870
Adj Flow Rate, veh/h	2	74	4	28	78	158	5	32	59	23	6	4
Peak Hour Factor	0.54	0.54	0.54	0.81	0.81	0.81	0.73	0.73	0.73	0.69	0.69	0.69
Percent Heavy Veh, %	2	2	2	2	2	2	2	2	2	2	2	2
Cap, veh/h	4	137	7	72	202	217	66	333	565	823	574	383
Arrive On Green	0.08	0.08	0.08	0.15	0.15	0.15	0.56	0.56	0.56	0.56	0.56	0.56
Sat Flow, veh/h	46	1699	92	488	1358	1463	38	598	1013	1300	1030	687
Grp Volume(v), veh/h	80	0	0	106	0	158	96	0	0	23	0	10
Grp Sat Flow(s),veh/h/ln	1836	0	0	1846	0	1463	1649	0	0	1300	0	1717
Q Serve(g_s), s	3.5	0.0	0.0	4.4	0.0	8.7	0.0	0.0	0.0	0.0	0.0	0.2
Cycle Q Clear(g_c), s	3.5	0.0	0.0	4.4	0.0	8.7	2.3	0.0	0.0	0.5	0.0	0.2
Prop In Lane	0.02		0.05	0.26		1.00	0.05		0.61	1.00		0.40
Lane Grp Cap(c), veh/h	149	0	0	274	0	217	964	0	0	823	0	957
V/C Ratio(X)	0.54	0.00	0.00	0.39	0.00	0.73	0.10	0.00	0.00	0.03	0.00	0.01
Avail Cap(c_a), veh/h	784	0	0	1073	0	850	964	0	0	823	0	957
HCM Platoon Ratio	1.00	1.00	1.00	1.00	1.00	1.00	1.00	1.00	1.00	1.00	1.00	1.00
Upstream Filter(I)	1.00	0.00	0.00	1.00	0.00	1.00	1.00	0.00	0.00	1.00	0.00	1.00
Uniform Delay (d), s/veh	37.2	0.0	0.0	32.4	0.0	34.3	8.8	0.0	0.0	8.4	0.0	8.3
Incr Delay (d2), s/veh	1.1	0.0	0.0	0.3	0.0	1.8	0.2	0.0	0.0	0.1	0.0	0.0
Initial Q Delay(d3),s/veh	0.0	0.0	0.0	0.0	0.0	0.0	0.0	0.0	0.0	0.0	0.0	0.0
%ile BackOfQ(50%),veh/ln	1.6	0.0	0.0	1.9	0.0	3.0	0.8	0.0	0.0	0.2	0.0	0.1
Unsig. Movement Delay, s/veh												
LnGrp Delay(d),s/veh	38.4	0.0	0.0	32.8	0.0	36.0	9.0	0.0	0.0	8.4	0.0	8.3
LnGrp LOS	D	A	A	C	A	D	A	A	A	A	A	A
Approach Vol, veh/h		80			264			96			33	
Approach Delay, s/veh		38.4			34.7			9.0			8.4	
Approach LOS		D			C			A			A	

Timer - Assigned Phs	2	4	6	8
Phs Duration (G+Y+Rc), s	53.0	12.8	53.0	18.5
Change Period (Y+Rc), s	6.0	6.0	6.0	6.0
Max Green Setting (Gmax), s	47.0	36.0	47.0	49.0
Max Q Clear Time (g_c+I1), s	4.3	5.5	2.5	10.7
Green Ext Time (p_c), s	0.1	0.3	0.2	0.6

Intersection Summary	
HCM 6th Ctrl Delay	28.3
HCM 6th LOS	C



Movement	EBL	EBT	EBR	WBL	WBT	WBR	NBL	NBT	NBR	SBL	SBT	SBR
Lane Configurations												
Traffic Volume (veh/h)	55	17	33	1	46	29	133	1290	21	22	1040	37
Future Volume (veh/h)	55	17	33	1	46	29	133	1290	21	22	1040	37
Initial Q (Qb), veh	0	0	0	0	0	0	0	0	0	0	0	0
Ped-Bike Adj(A_pbT)	1.00		0.94	1.00		0.96	1.00		0.96	1.00		0.98
Parking Bus, Adj	1.00	1.00	1.00	1.00	1.00	1.00	1.00	1.00	1.00	1.00	1.00	1.00
Work Zone On Approach		No			No			No			No	
Adj Sat Flow, veh/h/ln	1870	1870	1870	1870	1870	1870	1870	1870	1870	1870	1870	1870
Adj Flow Rate, veh/h	71	22	42	1	59	37	166	1612	26	29	1368	49
Peak Hour Factor	0.78	0.78	0.78	0.78	0.78	0.78	0.80	0.80	0.80	0.76	0.76	0.76
Percent Heavy Veh, %	2	2	2	2	2	2	2	2	2	2	2	2
Cap, veh/h	133	448	858	5	314	255	281	1730	28	91	1611	820
Arrive On Green	0.07	0.24	0.24	0.00	0.17	0.17	0.08	0.48	0.48	0.05	0.45	0.45
Sat Flow, veh/h	1781	1870	2635	1781	1870	1518	3456	3577	58	1781	3554	1548
Grp Volume(v), veh/h	71	22	42	1	59	37	166	800	838	29	1368	49
Grp Sat Flow(s),veh/h/ln	1781	1870	1317	1781	1870	1518	1728	1777	1857	1781	1777	1548
Q Serve(g_s), s	4.7	1.1	1.3	0.1	3.3	2.5	5.7	51.7	52.0	1.9	41.9	1.9
Cycle Q Clear(g_c), s	4.7	1.1	1.3	0.1	3.3	2.5	5.7	51.7	52.0	1.9	41.9	1.9
Prop In Lane	1.00		1.00	1.00		1.00	1.00		0.03	1.00		1.00
Lane Grp Cap(c), veh/h	133	448	858	5	314	255	281	859	898	91	1611	820
V/C Ratio(X)	0.54	0.05	0.05	0.21	0.19	0.15	0.59	0.93	0.93	0.32	0.85	0.06
Avail Cap(c_a), veh/h	146	703	1217	146	703	571	282	859	898	146	1647	835
HCM Platoon Ratio	1.00	1.00	1.00	1.00	1.00	1.00	1.00	1.00	1.00	1.00	1.00	1.00
Upstream Filter(I)	1.00	1.00	1.00	1.00	1.00	1.00	1.00	1.00	1.00	1.00	1.00	1.00
Uniform Delay (d), s/veh	54.6	35.8	28.7	60.9	43.8	43.4	54.2	29.7	29.7	56.0	29.7	14.1
Incr Delay (d2), s/veh	1.2	0.1	0.0	7.5	0.6	0.6	2.2	17.8	17.7	0.7	5.8	0.1
Initial Q Delay(d3),s/veh	0.0	0.0	0.0	0.0	0.0	0.0	0.0	0.0	0.0	0.0	0.0	0.0
%ile BackOfQ(50%),veh/ln	2.1	0.5	0.4	0.0	1.6	1.0	2.5	23.9	25.1	0.9	17.5	0.7
Unsig. Movement Delay, s/veh												
LnGrp Delay(d),s/veh	55.8	35.9	28.7	68.4	44.4	44.0	56.4	47.5	47.4	56.7	35.5	14.2
LnGrp LOS	E	D	C	E	D	D	E	D	D	E	D	B
Approach Vol, veh/h		135			97			1804			1446	
Approach Delay, s/veh		44.2			44.5			48.3			35.2	
Approach LOS		D			D			D			D	

Timer - Assigned Phs	1	2	3	4	5	6	7	8
Phs Duration (G+Y+Rc), s	12.0	67.6	6.0	36.8	15.7	63.9	14.8	28.0
Change Period (Y+Rc), s	* 5.7	* 8.4	* 5.7	7.5	* 5.7	* 8.4	* 5.7	7.5
Max Green Setting (Gmax), s	* 10	* 57	* 10	46.0	* 10	* 57	* 10	46.0
Max Q Clear Time (g_c+I1), s	13.9	54.0	2.1	3.3	7.7	43.9	6.7	5.3
Green Ext Time (p_c), s	0.0	2.6	0.0	0.5	0.1	11.6	0.0	0.9

Intersection Summary	
HCM 6th Ctrl Delay	42.6
HCM 6th LOS	D

Notes

* HCM 6th computational engine requires equal clearance times for the phases crossing the barrier.

Intersection	
Int Delay, s/veh	3

Movement	EBL	EBR	NBL	NBT	SBT	SBR
Lane Configurations						
Traffic Vol, veh/h	62	56	21	776	356	20
Future Vol, veh/h	62	56	21	776	356	20
Conflicting Peds, #/hr	10	10	10	0	0	10
Sign Control	Stop	Stop	Free	Free	Free	Free
RT Channelized	-	None	-	None	-	None
Storage Length	0	-	410	-	-	80
Veh in Median Storage, #	0	-	-	0	0	-
Grade, %	0	-	-	0	0	-
Peak Hour Factor	92	92	92	92	92	92
Heavy Vehicles, %	2	2	2	2	2	2
Mvmt Flow	67	61	23	843	387	22

Major/Minor	Minor2		Major1		Major2	
Conflicting Flow All	1296	407	419	0	-	0
Stage 1	397	-	-	-	-	-
Stage 2	899	-	-	-	-	-
Critical Hdwy	6.42	6.22	4.12	-	-	-
Critical Hdwy Stg 1	5.42	-	-	-	-	-
Critical Hdwy Stg 2	5.42	-	-	-	-	-
Follow-up Hdwy	3.518	3.318	2.218	-	-	-
Pot Cap-1 Maneuver	179	644	1140	-	-	-
Stage 1	679	-	-	-	-	-
Stage 2	397	-	-	-	-	-
Platoon blocked, %				-	-	-
Mov Cap-1 Maneuver	172	632	1129	-	-	-
Mov Cap-2 Maneuver	172	-	-	-	-	-
Stage 1	659	-	-	-	-	-
Stage 2	393	-	-	-	-	-

Approach	EB	NB	SB
HCM Control Delay, s	31.1	0.2	0
HCM LOS	D		

Minor Lane/Major Mvmt	NBL	NBT	EBLn1	SBT	SBR
Capacity (veh/h)	1129	-	263	-	-
HCM Lane V/C Ratio	0.02	-	0.488	-	-
HCM Control Delay (s)	8.3	-	31.1	-	-
HCM Lane LOS	A	-	D	-	-
HCM 95th %tile Q(veh)	0.1	-	2.5	-	-

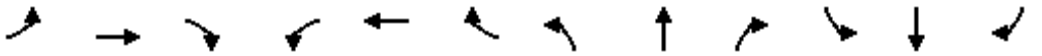

Movement	EBL	EBT	EBR	WBL	WBT	WBR	NBL	NBT	NBR	SBL	SBT	SBR
Lane Configurations												
Traffic Volume (veh/h)	122	107	110	219	79	271	42	331	38	147	172	39
Future Volume (veh/h)	122	107	110	219	79	271	42	331	38	147	172	39
Initial Q (Qb), veh	0	0	0	0	0	0	0	0	0	0	0	0
Ped-Bike Adj(A_pbT)	1.00		0.96	1.00		0.95	1.00		0.97	1.00		0.97
Parking Bus, Adj	1.00	1.00	1.00	1.00	1.00	1.00	1.00	1.00	1.00	1.00	1.00	1.00
Work Zone On Approach		No			No			No			No	
Adj Sat Flow, veh/h/ln	1870	1870	1870	1870	1870	1870	1870	1870	1870	1870	1870	1870
Adj Flow Rate, veh/h	167	147	151	284	103	352	49	389	45	175	205	46
Peak Hour Factor	0.73	0.73	0.73	0.77	0.77	0.77	0.85	0.85	0.85	0.84	0.84	0.84
Percent Heavy Veh, %	2	2	2	2	2	2	2	2	2	2	2	2
Cap, veh/h	215	414	338	322	527	424	168	458	53	210	873	191
Arrive On Green	0.12	0.22	0.22	0.18	0.28	0.28	0.09	0.28	0.28	0.12	0.30	0.30
Sat Flow, veh/h	1781	1870	1529	1781	1870	1505	1781	1640	190	1781	2881	631
Grp Volume(v), veh/h	167	147	151	284	103	352	49	0	434	175	124	127
Grp Sat Flow(s),veh/h/ln	1781	1870	1529	1781	1870	1505	1781	0	1829	1781	1777	1735
Q Serve(g_s), s	8.2	6.0	7.7	14.0	3.8	19.7	2.3	0.0	20.1	8.6	4.7	4.9
Cycle Q Clear(g_c), s	8.2	6.0	7.7	14.0	3.8	19.7	2.3	0.0	20.1	8.6	4.7	4.9
Prop In Lane	1.00		1.00	1.00		1.00	1.00		0.10	1.00		0.36
Lane Grp Cap(c), veh/h	215	414	338	322	527	424	168	0	511	210	539	526
V/C Ratio(X)	0.78	0.36	0.45	0.88	0.20	0.83	0.29	0.00	0.85	0.83	0.23	0.24
Avail Cap(c_a), veh/h	357	479	392	516	645	520	238	0	733	337	811	792
HCM Platoon Ratio	1.00	1.00	1.00	1.00	1.00	1.00	1.00	1.00	1.00	1.00	1.00	1.00
Upstream Filter(I)	1.00	1.00	1.00	1.00	1.00	1.00	1.00	0.00	1.00	1.00	1.00	1.00
Uniform Delay (d), s/veh	38.3	29.6	30.2	35.8	24.5	30.3	37.9	0.0	30.6	38.7	23.5	23.5
Incr Delay (d2), s/veh	2.3	0.7	1.3	6.4	0.3	10.2	0.4	0.0	7.8	4.6	0.3	0.3
Initial Q Delay(d3),s/veh	0.0	0.0	0.0	0.0	0.0	0.0	0.0	0.0	0.0	0.0	0.0	0.0
%ile BackOfQ(50%),veh/ln	3.6	2.7	2.9	6.5	1.7	8.1	1.0	0.0	9.4	3.9	2.0	2.0
Unsig. Movement Delay, s/veh												
LnGrp Delay(d),s/veh	40.6	30.3	31.5	42.3	24.8	40.4	38.2	0.0	38.4	43.3	23.8	23.9
LnGrp LOS	D	C	C	D	C	D	D	A	D	D	C	C
Approach Vol, veh/h		465			739			483			426	
Approach Delay, s/veh		34.4			38.9			38.4			31.8	
Approach LOS		C			D			D			C	

Timer - Assigned Phs	1	2	3	4	5	6	7	8
Phs Duration (G+Y+Rc), s	14.6	31.1	20.3	23.9	12.5	33.2	14.8	29.3
Change Period (Y+Rc), s	4.0	6.0	4.0	4.0	4.0	6.0	4.0	4.0
Max Green Setting (Gmax), s	17.0	36.0	26.0	23.0	12.0	41.0	18.0	31.0
Max Q Clear Time (g_c+I1), s	10.6	22.1	16.0	9.7	4.3	6.9	10.2	21.7
Green Ext Time (p_c), s	0.1	2.9	0.3	1.6	0.0	2.1	0.1	2.0

Intersection Summary	
HCM 6th Ctrl Delay	36.4
HCM 6th LOS	D

Intersection	
Intersection Delay, s/veh	67.7
Intersection LOS	F

Movement	EBL	EBT	EBR	WBL	WBT	WBR	NBL	NBT	NBR	SBL	SBT	SBR
Lane Configurations												
Traffic Vol, veh/h	12	135	111	33	215	153	146	151	15	234	146	69
Future Vol, veh/h	12	135	111	33	215	153	146	151	15	234	146	69
Peak Hour Factor	0.77	0.77	0.77	0.83	0.83	0.83	0.85	0.85	0.85	0.83	0.83	0.83
Heavy Vehicles, %	2	2	2	2	2	2	2	2	2	2	2	2
Mvmt Flow	16	175	144	40	259	184	172	178	18	282	176	83
Number of Lanes	0	1	1	0	1	1	0	1	0	0	1	0

Approach	EB	WB	NB	SB
Opposing Approach	WB	EB	SB	NB
Opposing Lanes	2	2	1	1
Conflicting Approach Left	SB	NB	EB	WB
Conflicting Lanes Left	1	1	2	2
Conflicting Approach Right	NB	SB	WB	EB
Conflicting Lanes Right	1	1	2	2
HCM Control Delay	19.2	27.3	45.9	148.7
HCM LOS	C	D	E	F

Lane	NBLn1	EBLn1	EBLn2	WBLn1	WBLn2	SBLn1
Vol Left, %	47%	8%	0%	13%	0%	52%
Vol Thru, %	48%	92%	0%	87%	0%	33%
Vol Right, %	5%	0%	100%	0%	100%	15%
Sign Control	Stop	Stop	Stop	Stop	Stop	Stop
Traffic Vol by Lane	312	147	111	248	153	449
LT Vol	146	12	0	33	0	234
Through Vol	151	135	0	215	0	146
RT Vol	15	0	111	0	153	69
Lane Flow Rate	367	191	144	299	184	541
Geometry Grp	2	7	7	7	7	2
Degree of Util (X)	0.849	0.482	0.334	0.726	0.409	1.232
Departure Headway (Hd)	9.036	9.859	9.078	9.478	8.672	8.199
Convergence, Y/N	Yes	Yes	Yes	Yes	Yes	Yes
Cap	404	368	399	385	418	449
Service Time	7.036	7.559	6.778	7.178	6.372	6.199
HCM Lane V/C Ratio	0.908	0.519	0.361	0.777	0.44	1.205
HCM Control Delay	45.9	21.4	16.3	33.6	17.2	148.7
HCM Lane LOS	E	C	C	D	C	F
HCM 95th-tile Q	8.1	2.5	1.4	5.6	2	22

Intersection	
Intersection Delay, s/veh	4.7
Intersection LOS	A

Approach	EB	WB	NB	SB
Entry Lanes	1	1	1	1
Conflicting Circle Lanes	1	1	1	1
Adj Approach Flow, veh/h	302	320	58	28
Demand Flow Rate, veh/h	308	326	59	28
Vehicles Circulating, veh/h	25	49	305	369
Vehicles Exiting, veh/h	372	315	28	6
Ped Vol Crossing Leg, #/h	10	10	10	10
Ped Cap Adj	0.999	0.999	0.999	0.999
Approach Delay, s/veh	4.7	5.0	4.1	4.1
Approach LOS	A	A	A	A

Lane	Left	Left	Left	Left
Designated Moves	LTR	LTR	LTR	LTR
Assumed Moves	LTR	LTR	LTR	LTR
RT Channelized				
Lane Util	1.000	1.000	1.000	1.000
Follow-Up Headway, s	2.609	2.609	2.609	2.609
Critical Headway, s	4.976	4.976	4.976	4.976
Entry Flow, veh/h	308	326	59	28
Cap Entry Lane, veh/h	1345	1313	1011	947
Entry HV Adj Factor	0.981	0.981	0.982	0.994
Flow Entry, veh/h	302	320	58	28
Cap Entry, veh/h	1318	1286	991	940
V/C Ratio	0.229	0.249	0.058	0.030
Control Delay, s/veh	4.7	5.0	4.1	4.1
LOS	A	A	A	A
95th %tile Queue, veh	1	1	0	0

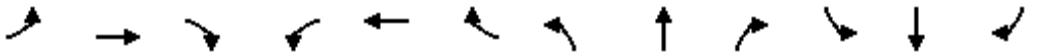

Movement	EBL	EBT	EBR	WBL	WBT	WBR	NBL	NBT	NBR	SBL	SBT	SBR
Lane Configurations												
Traffic Volume (veh/h)	74	128	106	74	156	101	128	685	68	83	836	50
Future Volume (veh/h)	74	128	106	74	156	101	128	685	68	83	836	50
Initial Q (Qb), veh	0	0	0	0	0	0	0	0	0	0	0	0
Ped-Bike Adj(A_pbT)	1.00		0.96	1.00		0.96	1.00		0.96	1.00		0.96
Parking Bus, Adj	1.00	1.00	1.00	1.00	1.00	1.00	1.00	1.00	1.00	1.00	1.00	1.00
Work Zone On Approach		No			No			No			No	
Adj Sat Flow, veh/h/ln	1870	1870	1870	1870	1870	1870	1870	1870	1870	1870	1870	1870
Adj Flow Rate, veh/h	80	139	115	94	197	128	133	714	71	90	909	54
Peak Hour Factor	0.92	0.92	0.92	0.79	0.79	0.79	0.96	0.96	0.96	0.92	0.92	0.92
Percent Heavy Veh, %	2	2	2	2	2	2	2	2	2	2	2	2
Cap, veh/h	101	290	234	117	306	248	159	1715	170	113	1705	101
Arrive On Green	0.06	0.15	0.15	0.07	0.16	0.16	0.09	0.53	0.53	0.06	0.50	0.50
Sat Flow, veh/h	1781	1870	1514	1781	1870	1517	1781	3252	323	1781	3400	202
Grp Volume(v), veh/h	80	139	115	94	197	128	133	390	395	90	475	488
Grp Sat Flow(s),veh/h/ln	1781	1870	1514	1781	1870	1517	1781	1777	1798	1781	1777	1825
Q Serve(g_s), s	5.3	8.1	8.3	6.2	11.8	9.2	8.8	15.9	16.0	6.0	21.8	21.8
Cycle Q Clear(g_c), s	5.3	8.1	8.3	6.2	11.8	9.2	8.8	15.9	16.0	6.0	21.8	21.8
Prop In Lane	1.00		1.00	1.00		1.00	1.00		0.18	1.00		0.11
Lane Grp Cap(c), veh/h	101	290	234	117	306	248	159	937	948	113	891	915
V/C Ratio(X)	0.79	0.48	0.49	0.80	0.64	0.52	0.83	0.42	0.42	0.80	0.53	0.53
Avail Cap(c_a), veh/h	154	500	405	169	516	418	214	937	948	181	891	915
HCM Platoon Ratio	1.00	1.00	1.00	1.00	1.00	1.00	1.00	1.00	1.00	1.00	1.00	1.00
Upstream Filter(I)	1.00	1.00	1.00	0.79	0.79	0.79	0.89	0.89	0.89	1.00	1.00	1.00
Uniform Delay (d), s/veh	55.9	46.3	46.4	55.3	46.9	45.8	53.8	17.2	17.2	55.4	20.4	20.4
Incr Delay (d2), s/veh	7.0	0.5	0.6	8.1	0.7	0.5	13.1	1.2	1.2	4.7	2.3	2.2
Initial Q Delay(d3),s/veh	0.0	0.0	0.0	0.0	0.0	0.0	0.0	0.0	0.0	0.0	0.0	0.0
%ile BackOfQ(50%),veh/ln	2.6	3.8	3.2	3.0	5.5	3.5	4.5	6.7	6.8	2.8	9.5	9.7
Unsig. Movement Delay, s/veh												
LnGrp Delay(d),s/veh	62.9	46.8	47.0	63.4	47.6	46.3	66.9	18.4	18.4	60.2	22.6	22.6
LnGrp LOS	E	D	D	E	D	D	E	B	B	E	C	C
Approach Vol, veh/h		334			419			918			1053	
Approach Delay, s/veh		50.7			50.7			25.4			25.8	
Approach LOS		D			D			C			C	

Timer - Assigned Phs	1	2	3	4	5	6	7	8
Phs Duration (G+Y+Rc), s	13.2	69.0	13.5	24.3	16.3	65.9	12.4	25.4
Change Period (Y+Rc), s	5.6	5.7	5.6	5.7	5.6	5.7	5.6	5.7
Max Green Setting (Gmax), s	12.2	41.7	11.4	32.1	14.4	39.5	10.4	33.1
Max Q Clear Time (g_c+I1), s	8.0	18.0	8.2	10.3	10.8	23.8	7.3	13.8
Green Ext Time (p_c), s	0.0	3.3	0.0	0.6	0.1	3.8	0.0	0.8

Intersection Summary	
HCM 6th Ctrl Delay	32.6
HCM 6th LOS	C



Movement	EBL	EBT	EBR	WBL	WBT	WBR	NBL	NBT	NBR	SBL	SBT	SBR
Lane Configurations												
Traffic Volume (veh/h)	40	186	84	24	169	25	91	424	28	59	613	55
Future Volume (veh/h)	40	186	84	24	169	25	91	424	28	59	613	55
Initial Q (Qb), veh	0	0	0	0	0	0	0	0	0	0	0	0
Ped-Bike Adj(A_pbT)	1.00		0.97	0.99		0.97	1.00		0.96	1.00		0.96
Parking Bus, Adj	1.00	1.00	1.00	1.00	1.00	1.00	1.00	1.00	1.00	1.00	1.00	1.00
Work Zone On Approach		No			No			No			No	
Adj Sat Flow, veh/h/ln	1870	1870	1870	1870	1870	1870	1870	1870	1870	1870	1870	1870
Adj Flow Rate, veh/h	49	227	102	32	228	34	106	493	33	78	807	72
Peak Hour Factor	0.82	0.82	0.82	0.74	0.74	0.74	0.86	0.86	0.86	0.76	0.76	0.76
Percent Heavy Veh, %	2	2	2	2	2	2	2	2	2	2	2	2
Cap, veh/h	162	461	207	87	332	47	139	1226	82	104	1131	101
Arrive On Green	0.09	0.38	0.38	0.23	0.23	0.23	0.08	0.36	0.36	0.06	0.34	0.34
Sat Flow, veh/h	1781	1211	544	108	1431	201	1781	3370	225	1781	3285	293
Grp Volume(v), veh/h	49	0	329	294	0	0	106	259	267	78	436	443
Grp Sat Flow(s),veh/h/ln	1781	0	1756	1740	0	0	1781	1777	1818	1781	1777	1801
Q Serve(g_s), s	1.7	0.0	9.2	3.7	0.0	0.0	3.8	7.0	7.0	2.8	13.7	13.7
Cycle Q Clear(g_c), s	1.7	0.0	9.2	9.8	0.0	0.0	3.8	7.0	7.0	2.8	13.7	13.7
Prop In Lane	1.00		0.31	0.11		0.12	1.00		0.12	1.00		0.16
Lane Grp Cap(c), veh/h	162	0	668	466	0	0	139	646	661	104	612	620
V/C Ratio(X)	0.30	0.00	0.49	0.63	0.00	0.00	0.76	0.40	0.40	0.75	0.71	0.71
Avail Cap(c_a), veh/h	313	0	1323	951	0	0	396	1312	1342	313	1229	1246
HCM Platoon Ratio	1.00	1.00	1.00	1.00	1.00	1.00	1.00	1.00	1.00	1.00	1.00	1.00
Upstream Filter(I)	1.00	0.00	1.00	1.00	0.00	0.00	1.00	1.00	1.00	1.00	1.00	1.00
Uniform Delay (d), s/veh	27.4	0.0	15.2	22.7	0.0	0.0	29.1	15.2	15.3	29.8	18.3	18.3
Incr Delay (d2), s/veh	1.0	0.0	0.6	1.4	0.0	0.0	8.4	0.4	0.4	10.2	1.6	1.5
Initial Q Delay(d3),s/veh	0.0	0.0	0.0	0.0	0.0	0.0	0.0	0.0	0.0	0.0	0.0	0.0
%ile BackOfQ(50%),veh/ln	0.7	0.0	3.3	3.9	0.0	0.0	1.9	2.7	2.7	1.4	5.4	5.4
Unsig. Movement Delay, s/veh												
LnGrp Delay(d),s/veh	28.4	0.0	15.8	24.1	0.0	0.0	37.5	15.7	15.7	40.1	19.9	19.9
LnGrp LOS	C	A	B	C	A	A	D	B	B	D	B	B
Approach Vol, veh/h		378			294			632			957	
Approach Delay, s/veh		17.4			24.1			19.3			21.5	
Approach LOS		B			C			B			C	

Timer - Assigned Phs	1	2		4	5	6	7	8
Phs Duration (G+Y+Rc), s	7.5	27.9		29.0	8.7	26.7	9.5	19.4
Change Period (Y+Rc), s	3.7	4.5		4.5	3.7	4.5	3.7	4.5
Max Green Setting (Gmax), s	11.3	47.5		48.5	14.3	44.5	11.3	33.5
Max Q Clear Time (g_c+I1), s	4.8	9.0		11.2	5.8	15.7	3.7	11.8
Green Ext Time (p_c), s	0.1	3.5		2.2	0.1	6.4	0.0	1.7

Intersection Summary	
HCM 6th Ctrl Delay	20.6
HCM 6th LOS	C



Movement	EBL	EBT	EBR	WBL	WBT	WBR	NBL	NBT	NBR	SBL	SBT	SBR
Lane Configurations												
Traffic Volume (veh/h)	39	141	71	135	132	184	33	652	88	104	792	32
Future Volume (veh/h)	39	141	71	135	132	184	33	652	88	104	792	32
Initial Q (Qb), veh	0	0	0	0	0	0	0	0	0	0	0	0
Ped-Bike Adj(A_pbT)	1.00		0.96	1.00		0.96	1.00		0.95	1.00		0.96
Parking Bus, Adj	1.00	1.00	1.00	1.00	1.00	1.00	1.00	1.00	1.00	1.00	1.00	1.00
Work Zone On Approach		No			No			No			No	
Adj Sat Flow, veh/h/ln	1870	1870	1870	1870	1870	1870	1870	1870	1870	1870	1870	1870
Adj Flow Rate, veh/h	42	152	76	141	138	192	42	825	111	118	900	36
Peak Hour Factor	0.93	0.93	0.93	0.96	0.96	0.96	0.79	0.79	0.79	0.88	0.88	0.88
Percent Heavy Veh, %	2	2	2	2	2	2	2	2	2	2	2	2
Cap, veh/h	54	194	97	185	181	306	68	1012	136	144	1273	51
Arrive On Green	0.20	0.20	0.20	0.20	0.20	0.20	0.04	0.32	0.32	0.08	0.37	0.37
Sat Flow, veh/h	272	983	491	922	902	1526	1781	3127	421	1781	3476	139
Grp Volume(v), veh/h	270	0	0	279	0	192	42	469	467	118	460	476
Grp Sat Flow(s),veh/h/ln	1746	0	0	1824	0	1526	1781	1777	1770	1781	1777	1838
Q Serve(g_s), s	17.3	0.0	0.0	17.0	0.0	13.5	2.7	28.5	28.5	7.7	26.0	26.0
Cycle Q Clear(g_c), s	17.3	0.0	0.0	17.0	0.0	13.5	2.7	28.5	28.5	7.7	26.0	26.0
Prop In Lane	0.16		0.28	0.51		1.00	1.00		0.24	1.00		0.08
Lane Grp Cap(c), veh/h	344	0	0	365	0	306	68	575	573	144	651	673
V/C Ratio(X)	0.78	0.00	0.00	0.76	0.00	0.63	0.62	0.82	0.82	0.82	0.71	0.71
Avail Cap(c_a), veh/h	549	0	0	574	0	480	92	626	624	171	704	729
HCM Platoon Ratio	1.00	1.00	1.00	1.00	1.00	1.00	1.00	1.00	1.00	1.00	1.00	1.00
Upstream Filter(I)	1.00	0.00	0.00	1.00	0.00	1.00	1.00	1.00	1.00	1.00	1.00	1.00
Uniform Delay (d), s/veh	44.8	0.0	0.0	44.4	0.0	43.0	55.7	36.5	36.5	53.2	31.9	31.9
Incr Delay (d2), s/veh	3.9	0.0	0.0	3.3	0.0	2.1	3.4	10.9	11.0	19.8	5.5	5.3
Initial Q Delay(d3),s/veh	0.0	0.0	0.0	0.0	0.0	0.0	0.0	0.0	0.0	0.0	0.0	0.0
%ile BackOfQ(50%),veh/ln	7.8	0.0	0.0	7.9	0.0	5.2	1.3	13.7	13.6	4.2	11.8	12.1
Unsig. Movement Delay, s/veh												
LnGrp Delay(d),s/veh	48.8	0.0	0.0	47.7	0.0	45.1	59.1	47.4	47.5	73.0	37.3	37.2
LnGrp LOS	D	A	A	D	A	D	E	D	D	E	D	D
Approach Vol, veh/h		270			471			978			1054	
Approach Delay, s/veh		48.8			46.7			48.0			41.2	
Approach LOS		D			D			D			D	

Timer - Assigned Phs	1	2		4	5	6		8
Phs Duration (G+Y+Rc), s	10.2	48.4		29.6	15.2	43.4		29.3
Change Period (Y+Rc), s	* 5.7	5.4		6.1	* 5.7	5.4		6.1
Max Green Setting (Gmax), s	* 6.1	46.6		37.0	* 11	41.4		37.0
Max Q Clear Time (g_c+I1), s	14.7	28.0		19.0	9.7	30.5		19.3
Green Ext Time (p_c), s	0.0	11.4		2.1	0.0	7.5		1.4

Intersection Summary	
HCM 6th Ctrl Delay	45.3
HCM 6th LOS	D

Notes

* HCM 6th computational engine requires equal clearance times for the phases crossing the barrier.



Movement	EBL	EBT	EBR	WBL	WBT	WBR	NBL	NBT	NBR	SBL	SBT	SBR
Lane Configurations												
Traffic Volume (veh/h)	57	110	181	62	153	68	127	516	34	46	501	56
Future Volume (veh/h)	57	110	181	62	153	68	127	516	34	46	501	56
Initial Q (Qb), veh	0	0	0	0	0	0	0	0	0	0	0	0
Ped-Bike Adj(A_pbT)	1.00		0.91	1.00		0.95	1.00		0.96	1.00		0.95
Parking Bus, Adj	1.00	1.00	1.00	1.00	1.00	1.00	1.00	1.00	1.00	1.00	1.00	1.00
Work Zone On Approach		No			No			No			No	
Adj Sat Flow, veh/h/ln	1870	1870	1870	1870	1870	1870	1870	1870	1870	1870	1870	1870
Adj Flow Rate, veh/h	63	121	199	98	243	108	141	573	38	50	545	61
Peak Hour Factor	0.91	0.91	0.91	0.63	0.63	0.63	0.90	0.90	0.90	0.92	0.92	0.92
Percent Heavy Veh, %	2	2	2	2	2	2	2	2	2	2	2	2
Cap, veh/h	77	149	177	103	255	114	168	638	42	64	581	469
Arrive On Green	0.12	0.12	0.12	0.27	0.27	0.27	0.09	0.37	0.37	0.04	0.31	0.31
Sat Flow, veh/h	630	1209	1444	382	946	421	1781	1729	115	1781	1870	1510
Grp Volume(v), veh/h	184	0	199	449	0	0	141	0	611	50	545	61
Grp Sat Flow(s),veh/h/ln	1839	0	1444	1749	0	0	1781	0	1844	1781	1870	1510
Q Serve(g_s), s	11.2	0.0	14.1	28.9	0.0	0.0	8.9	0.0	35.9	3.2	32.5	3.3
Cycle Q Clear(g_c), s	11.2	0.0	14.1	28.9	0.0	0.0	8.9	0.0	35.9	3.2	32.5	3.3
Prop In Lane	0.34		1.00	0.22		0.24	1.00		0.06	1.00		1.00
Lane Grp Cap(c), veh/h	226	0	177	472	0	0	168	0	680	64	581	469
V/C Ratio(X)	0.81	0.00	1.12	0.95	0.00	0.00	0.84	0.00	0.90	0.78	0.94	0.13
Avail Cap(c_a), veh/h	226	0	177	474	0	0	177	0	736	90	655	529
HCM Platoon Ratio	1.00	1.00	1.00	1.00	1.00	1.00	1.00	1.00	1.00	1.00	1.00	1.00
Upstream Filter(I)	1.00	0.00	1.00	1.00	0.00	0.00	1.00	0.00	1.00	1.00	1.00	1.00
Uniform Delay (d), s/veh	49.1	0.0	50.3	41.1	0.0	0.0	51.1	0.0	34.2	54.9	38.5	28.4
Incr Delay (d2), s/veh	18.8	0.0	103.9	29.0	0.0	0.0	25.9	0.0	12.6	15.5	19.1	0.0
Initial Q Delay(d3),s/veh	0.0	0.0	0.0	0.0	0.0	0.0	0.0	0.0	0.0	0.0	0.0	0.0
%ile BackOfQ(50%),veh/ln	6.3	0.0	10.1	16.0	0.0	0.0	5.1	0.0	17.5	1.7	17.2	1.2
Unsig. Movement Delay, s/veh												
LnGrp Delay(d),s/veh	67.9	0.0	154.3	70.1	0.0	0.0	77.0	0.0	46.8	70.3	57.6	28.5
LnGrp LOS	E	A	F	E	A	A	E	A	D	E	E	C
Approach Vol, veh/h		383			449			752			656	
Approach Delay, s/veh		112.8			70.1			52.5			55.8	
Approach LOS		F			E			D			E	

Timer - Assigned Phs	1	2		4	5	6		8
Phs Duration (G+Y+Rc), s	9.7	48.1		20.0	16.4	41.5		36.9
Change Period (Y+Rc), s	5.6	5.8		5.9	5.6	5.8		5.9
Max Green Setting (Gmax), s	5.8	45.8		14.1	11.4	40.2		31.1
Max Q Clear Time (g_c+I1), s	5.2	37.9		16.1	10.9	34.5		30.9
Green Ext Time (p_c), s	0.0	1.5		0.0	0.0	1.1		0.0

Intersection Summary	
HCM 6th Ctrl Delay	67.3
HCM 6th LOS	E

Intersection	
Intersection Delay, s/veh	57.6
Intersection LOS	F

Movement	EBL	EBT	EBR	WBL	WBT	WBR	NBL	NBT	NBR	SBL	SBT	SBR
Lane Configurations												
Traffic Vol, veh/h	43	124	83	45	114	49	61	433	41	103	549	62
Future Vol, veh/h	43	124	83	45	114	49	61	433	41	103	549	62
Peak Hour Factor	0.81	0.81	0.81	0.89	0.89	0.89	0.86	0.86	0.86	0.73	0.73	0.73
Heavy Vehicles, %	2	2	2	2	2	2	2	2	2	2	2	2
Mvmt Flow	53	153	102	51	128	55	71	503	48	141	752	85
Number of Lanes	0	1	0	0	1	0	1	2	0	1	2	0

Approach	EB	WB	NB	SB
Opposing Approach	WB	EB	SB	NB
Opposing Lanes	1	1	3	3
Conflicting Approach Left	SB	NB	EB	WB
Conflicting Lanes Left	3	3	1	1
Conflicting Approach Right	NB	SB	WB	EB
Conflicting Lanes Right	3	3	1	1
HCM Control Delay	39.9	27.7	31.6	86.8
HCM LOS	E	D	D	F

Lane	NBLn1	NBLn2	NBLn3	EBLn1	WBLn1	SBLn1	SBLn2	SBLn3
Vol Left, %	100%	0%	0%	17%	22%	100%	0%	0%
Vol Thru, %	0%	100%	78%	50%	55%	0%	100%	75%
Vol Right, %	0%	0%	22%	33%	24%	0%	0%	25%
Sign Control	Stop	Stop	Stop	Stop	Stop	Stop	Stop	Stop
Traffic Vol by Lane	61	289	185	250	208	103	366	245
LT Vol	61	0	0	43	45	103	0	0
Through Vol	0	289	144	124	114	0	366	183
RT Vol	0	0	41	83	49	0	0	62
Lane Flow Rate	71	336	216	309	234	141	501	336
Geometry Grp	7	7	7	7	7	7	7	7
Degree of Util (X)	0.183	0.819	0.516	0.788	0.62	0.359	1.204	0.788
Departure Headway (Hd)	9.696	9.169	9.005	9.583	9.984	9.168	8.642	8.456
Convergence, Y/N	Yes	Yes	Yes	Yes	Yes	Yes	Yes	Yes
Cap	372	396	403	380	365	391	421	426
Service Time	7.396	6.869	6.705	7.283	7.684	6.966	6.44	6.253
HCM Lane V/C Ratio	0.191	0.848	0.536	0.813	0.641	0.361	1.19	0.789
HCM Control Delay	14.6	42.1	20.9	39.9	27.7	17.1	140.1	36.4
HCM Lane LOS	B	E	C	E	D	C	F	E
HCM 95th-tile Q	0.7	7.4	2.9	6.7	4	1.6	19.9	6.9



Movement	EBL	EBT	EBR	WBL	WBT	WBR	NBL	NBT	NBR	SBL	SBT	SBR
Lane Configurations												
Traffic Volume (veh/h)	79	51	195	61	29	17	74	658	37	19	789	57
Future Volume (veh/h)	79	51	195	61	29	17	74	658	37	19	789	57
Initial Q (Qb), veh	0	0	0	0	0	0	0	0	0	0	0	0
Ped-Bike Adj(A_pbT)	1.00		0.96	1.00		0.95	1.00		0.96	1.00		0.96
Parking Bus, Adj	1.00	1.00	1.00	1.00	1.00	1.00	1.00	1.00	1.00	1.00	1.00	1.00
Work Zone On Approach		No			No			No			No	
Adj Sat Flow, veh/h/ln	1870	1870	1870	1870	1870	1870	1870	1870	1870	1870	1870	1870
Adj Flow Rate, veh/h	101	65	250	80	38	22	76	678	38	21	858	62
Peak Hour Factor	0.78	0.78	0.78	0.76	0.76	0.76	0.97	0.97	0.97	0.92	0.92	0.92
Percent Heavy Veh, %	2	2	2	2	2	2	2	2	2	2	2	2
Cap, veh/h	212	137	293	134	63	37	121	1408	79	65	1277	92
Arrive On Green	0.19	0.19	0.19	0.13	0.13	0.13	0.07	0.41	0.41	0.04	0.38	0.38
Sat Flow, veh/h	1104	711	1524	1002	476	276	1781	3412	191	1781	3349	242
Grp Volume(v), veh/h	166	0	250	140	0	0	76	353	363	21	455	465
Grp Sat Flow(s),veh/h/ln	1815	0	1524	1754	0	0	1781	1777	1826	1781	1777	1814
Q Serve(g_s), s	7.0	0.0	13.7	6.5	0.0	0.0	3.6	12.6	12.6	1.0	18.5	18.5
Cycle Q Clear(g_c), s	7.0	0.0	13.7	6.5	0.0	0.0	3.6	12.6	12.6	1.0	18.5	18.5
Prop In Lane	0.61		1.00	0.57		0.16	1.00		0.10	1.00		0.13
Lane Grp Cap(c), veh/h	349	0	293	234	0	0	121	733	754	65	678	692
V/C Ratio(X)	0.48	0.00	0.85	0.60	0.00	0.00	0.63	0.48	0.48	0.32	0.67	0.67
Avail Cap(c_a), veh/h	446	0	375	533	0	0	216	915	941	171	870	888
HCM Platoon Ratio	1.00	1.00	1.00	1.00	1.00	1.00	1.00	1.00	1.00	1.00	1.00	1.00
Upstream Filter(I)	1.00	0.00	1.00	1.00	0.00	0.00	1.00	1.00	1.00	1.00	1.00	1.00
Uniform Delay (d), s/veh	31.1	0.0	33.8	35.4	0.0	0.0	39.3	18.6	18.7	40.7	22.3	22.3
Incr Delay (d2), s/veh	1.0	0.0	14.0	2.5	0.0	0.0	2.0	1.8	1.7	1.0	4.2	4.1
Initial Q Delay(d3),s/veh	0.0	0.0	0.0	0.0	0.0	0.0	0.0	0.0	0.0	0.0	0.0	0.0
%ile BackOfQ(50%),veh/ln	3.1	0.0	6.1	2.9	0.0	0.0	1.6	5.1	5.2	0.4	7.8	8.0
Unsig. Movement Delay, s/veh												
LnGrp Delay(d),s/veh	32.1	0.0	47.8	37.8	0.0	0.0	41.3	20.4	20.4	41.7	26.5	26.4
LnGrp LOS	C	A	D	D	A	A	D	C	C	D	C	C
Approach Vol, veh/h		416			140			792			941	
Approach Delay, s/veh		41.5			37.8			22.4			26.8	
Approach LOS		D			D			C			C	

Timer - Assigned Phs	1	2		4	5	6		8
Phs Duration (G+Y+Rc), s	10.6	38.4		16.2	7.9	41.1		21.4
Change Period (Y+Rc), s	* 4.7	5.4		* 4.7	* 4.7	5.4		4.7
Max Green Setting (Gmax), s	* 11	42.4		* 26	* 8.3	44.6		21.3
Max Q Clear Time (g_c+I1), s	15.6	20.5		8.5	3.0	14.6		15.7
Green Ext Time (p_c), s	0.0	12.6		0.6	0.0	11.4		0.9

Intersection Summary	
HCM 6th Ctrl Delay	28.6
HCM 6th LOS	C

Notes

* HCM 6th computational engine requires equal clearance times for the phases crossing the barrier.



Movement	EBL	EBT	EBR	WBL	WBT	WBR	NBL	NBT	NBR	SBL	SBT	SBR
Lane Configurations												
Traffic Volume (veh/h)	104	61	249	79	66	56	202	543	42	61	756	95
Future Volume (veh/h)	104	61	249	79	66	56	202	543	42	61	756	95
Initial Q (Qb), veh	0	0	0	0	0	0	0	0	0	0	0	0
Ped-Bike Adj(A_pbT)	1.00		0.97	0.99		0.96	1.00		0.96	1.00		0.97
Parking Bus, Adj	1.00	1.00	1.00	1.00	1.00	1.00	1.00	1.00	1.00	1.00	1.00	1.00
Work Zone On Approach		No			No			No			No	
Adj Sat Flow, veh/h/ln	1870	1870	1870	1870	1870	1870	1870	1870	1870	1870	1870	1870
Adj Flow Rate, veh/h	116	68	277	92	77	65	217	584	45	65	804	101
Peak Hour Factor	0.90	0.90	0.90	0.86	0.86	0.86	0.93	0.93	0.93	0.94	0.94	0.94
Percent Heavy Veh, %	2	2	2	2	2	2	2	2	2	2	2	2
Cap, veh/h	145	677	559	155	122	86	253	1359	104	84	989	124
Arrive On Green	0.08	0.36	0.36	0.22	0.22	0.22	0.14	0.41	0.41	0.05	0.31	0.31
Sat Flow, veh/h	1781	1870	1544	464	550	390	1781	3332	256	1781	3164	397
Grp Volume(v), veh/h	116	68	277	234	0	0	217	311	318	65	451	454
Grp Sat Flow(s),veh/h/ln	1781	1870	1544	1403	0	0	1781	1777	1811	1781	1777	1785
Q Serve(g_s), s	6.1	2.3	13.3	11.9	0.0	0.0	11.4	12.0	12.0	3.4	22.4	22.4
Cycle Q Clear(g_c), s	6.1	2.3	13.3	14.6	0.0	0.0	11.4	12.0	12.0	3.4	22.4	22.4
Prop In Lane	1.00		1.00	0.39		0.28	1.00		0.14	1.00		0.22
Lane Grp Cap(c), veh/h	145	677	559	364	0	0	253	725	739	84	555	558
V/C Ratio(X)	0.80	0.10	0.50	0.64	0.00	0.00	0.86	0.43	0.43	0.78	0.81	0.81
Avail Cap(c_a), veh/h	196	962	794	531	0	0	343	817	833	177	651	654
HCM Platoon Ratio	1.00	1.00	1.00	1.00	1.00	1.00	1.00	1.00	1.00	1.00	1.00	1.00
Upstream Filter(I)	1.00	1.00	1.00	1.00	0.00	0.00	1.00	1.00	1.00	1.00	1.00	1.00
Uniform Delay (d), s/veh	43.1	20.2	23.7	34.3	0.0	0.0	40.0	20.3	20.3	45.0	30.2	30.2
Incr Delay (d2), s/veh	11.1	0.0	0.3	0.7	0.0	0.0	14.6	0.6	0.6	5.7	7.4	7.4
Initial Q Delay(d3),s/veh	0.0	0.0	0.0	0.0	0.0	0.0	0.0	0.0	0.0	0.0	0.0	0.0
%ile BackOfQ(50%),veh/ln	3.1	1.0	4.8	5.0	0.0	0.0	5.9	4.9	5.1	1.6	10.4	10.5
Unsig. Movement Delay, s/veh												
LnGrp Delay(d),s/veh	54.2	20.2	23.9	35.0	0.0	0.0	54.6	20.9	20.9	50.7	37.7	37.7
LnGrp LOS	D	C	C	C	A	A	D	C	C	D	D	D
Approach Vol, veh/h		461			234			846			970	
Approach Delay, s/veh		31.0			35.0			29.5			38.5	
Approach LOS		C			C			C			D	

Timer - Assigned Phs	1	2		4	5	6	7	8
Phs Duration (G+Y+Rc), s	10.1	44.6		40.7	19.2	35.5	13.4	27.4
Change Period (Y+Rc), s	5.6	5.7		6.2	5.6	5.7	5.6	6.2
Max Green Setting (Gmax), s	9.5	43.9		49.1	18.4	35.0	10.5	33.0
Max Q Clear Time (g_c+I1), s	15.4	14.0		15.3	13.4	24.4	8.1	16.6
Green Ext Time (p_c), s	0.0	6.1		0.8	0.3	5.5	0.0	0.9

Intersection Summary		
HCM 6th Ctrl Delay		33.8
HCM 6th LOS		C



Movement	EBL	EBT	EBR	WBL	WBT	WBR	NBL	NBT	NBR	SBL	SBT	SBR
Lane Configurations												
Traffic Volume (veh/h)	0	0	0	214	2	284	201	781	0	0	1065	103
Future Volume (veh/h)	0	0	0	214	2	284	201	781	0	0	1065	103
Initial Q (Qb), veh				0	0	0	0	0	0	0	0	0
Ped-Bike Adj(A_pbT)				1.00		0.97	1.00		1.00	1.00		0.96
Parking Bus, Adj				1.00	1.00	1.00	1.00	1.00	1.00	1.00	1.00	1.00
Work Zone On Approach					No			No			No	
Adj Sat Flow, veh/h/ln				1870	1870	1870	1870	1870	0	0	1870	1870
Adj Flow Rate, veh/h				230	2	305	272	1055	0	0	1210	117
Peak Hour Factor				0.93	0.93	0.93	0.74	0.74	0.74	0.88	0.88	0.88
Percent Heavy Veh, %				2	2	2	2	2	0	0	2	2
Cap, veh/h				435	4	378	304	2316	0	0	1421	137
Arrive On Green				0.25	0.25	0.25	0.17	0.65	0.00	0.00	0.44	0.44
Sat Flow, veh/h				1767	15	1533	1781	3647	0	0	3354	314
Grp Volume(v), veh/h				232	0	305	272	1055	0	0	658	669
Grp Sat Flow(s),veh/h/ln				1782	0	1533	1781	1777	0	0	1777	1798
Q Serve(g_s), s				11.6	0.0	19.3	15.4	15.2	0.0	0.0	34.2	34.5
Cycle Q Clear(g_c), s				11.6	0.0	19.3	15.4	15.2	0.0	0.0	34.2	34.5
Prop In Lane				0.99		1.00	1.00		0.00	0.00		0.17
Lane Grp Cap(c), veh/h				439	0	378	304	2316	0	0	774	784
V/C Ratio(X)				0.53	0.00	0.81	0.90	0.46	0.00	0.00	0.85	0.85
Avail Cap(c_a), veh/h				641	0	552	372	2496	0	0	796	806
HCM Platoon Ratio				1.00	1.00	1.00	1.00	1.00	1.00	1.00	1.00	1.00
Upstream Filter(I)				1.00	0.00	1.00	1.00	1.00	0.00	0.00	1.00	1.00
Uniform Delay (d), s/veh				33.6	0.0	36.5	41.9	8.9	0.0	0.0	26.1	26.1
Incr Delay (d2), s/veh				1.0	0.0	5.6	18.6	0.5	0.0	0.0	10.5	10.7
Initial Q Delay(d3),s/veh				0.0	0.0	0.0	0.0	0.0	0.0	0.0	0.0	0.0
%ile BackOfQ(50%),veh/ln				5.1	0.0	7.7	8.1	5.1	0.0	0.0	15.7	16.0
Unsig. Movement Delay, s/veh												
LnGrp Delay(d),s/veh				34.6	0.0	42.1	60.4	9.4	0.0	0.0	36.6	36.9
LnGrp LOS				C	A	D	E	A	A	A	D	D
Approach Vol, veh/h					537			1327			1327	
Approach Delay, s/veh					38.9			19.9			36.7	
Approach LOS					D			B			D	

Timer - Assigned Phs	1	2		4		6						
Phs Duration (G+Y+Rc), s	22.3	50.3		30.5		72.6						
Change Period (Y+Rc), s	4.7	5.4		5.1		5.4						
Max Green Setting (Gmax), s	17.6	46.2		37.1		72.4						
Max Q Clear Time (g_c+I1), s	17.4	36.5		21.3		17.2						
Green Ext Time (p_c), s	0.2	8.4		2.3		25.7						

Intersection Summary	
HCM 6th Ctrl Delay	30.1
HCM 6th LOS	C

Notes

* HCM 6th computational engine requires equal clearance times for the phases crossing the barrier.



Movement	EBL	EBT	EBR	WBL	WBT	WBR	NBL	NBT	NBR	SBL	SBT	SBR
Lane Configurations												
Traffic Volume (veh/h)	75	3	262	0	0	0	0	905	317	403	877	0
Future Volume (veh/h)	75	3	262	0	0	0	0	905	317	403	877	0
Initial Q (Qb), veh	0	0	0				0	0	0	0	0	0
Ped-Bike Adj(A_pbT)	1.00		0.97				1.00		0.96	1.00		1.00
Parking Bus, Adj	1.00	1.00	1.00				1.00	1.00	1.00	1.00	1.00	1.00
Work Zone On Approach		No						No			No	
Adj Sat Flow, veh/h/ln	1870	1870	1870				0	1870	1870	1870	1870	0
Adj Flow Rate, veh/h	93	4	323				0	1131	396	486	1057	0
Peak Hour Factor	0.81	0.81	0.81				0.80	0.80	0.80	0.83	0.83	0.83
Percent Heavy Veh, %	2	2	2				0	2	2	2	2	0
Cap, veh/h	82	4	284				0	1243	530	511	2406	0
Arrive On Green	0.23	0.23	0.23				0.00	0.35	0.35	0.29	0.68	0.00
Sat Flow, veh/h	351	15	1218				0	3647	1515	1781	3647	0
Grp Volume(v), veh/h	420	0	0				0	1131	396	486	1057	0
Grp Sat Flow(s),veh/h/ln	1583	0	0				0	1777	1515	1781	1777	0
Q Serve(g_s), s	27.3	0.0	0.0				0.0	35.5	26.9	31.3	16.0	0.0
Cycle Q Clear(g_c), s	27.3	0.0	0.0				0.0	35.5	26.9	31.3	16.0	0.0
Prop In Lane	0.22		0.77				0.00		1.00	1.00		0.00
Lane Grp Cap(c), veh/h	369	0	0				0	1243	530	511	2406	0
V/C Ratio(X)	1.14	0.00	0.00				0.00	0.91	0.75	0.95	0.44	0.00
Avail Cap(c_a), veh/h	369	0	0				0	1251	533	553	2496	0
HCM Platoon Ratio	1.00	1.00	1.00				1.00	1.00	1.00	1.00	1.00	1.00
Upstream Filter(I)	1.00	0.00	0.00				0.00	1.00	1.00	1.00	1.00	0.00
Uniform Delay (d), s/veh	44.9	0.0	0.0				0.0	36.3	33.5	40.9	8.7	0.0
Incr Delay (d2), s/veh	89.6	0.0	0.0				0.0	11.0	8.3	24.8	0.5	0.0
Initial Q Delay(d3),s/veh	0.0	0.0	0.0				0.0	0.0	0.0	0.0	0.0	0.0
%ile BackOfQ(50%),veh/ln	9.8	0.0	0.0				0.0	16.7	10.8	16.8	5.5	0.0
Unsig. Movement Delay, s/veh												
LnGrp Delay(d),s/veh	134.5	0.0	0.0				0.0	47.3	41.8	65.7	9.1	0.0
LnGrp LOS	F	A	A				A	D	D	E	A	A
Approach Vol, veh/h		420						1527			1543	
Approach Delay, s/veh		134.5						45.9			27.0	
Approach LOS		F						D			C	

Timer - Assigned Phs	2		5	6		8
Phs Duration (G+Y+Rc), s	84.6		38.3	46.3		32.4
Change Period (Y+Rc), s	5.4		* 4.7	5.4		5.1
Max Green Setting (Gmax), s	82.2		* 36	41.2		27.3
Max Q Clear Time (g_c+I1), s	18.0		33.3	37.5		29.3
Green Ext Time (p_c), s	27.4		0.3	3.4		0.0

Intersection Summary		
HCM 6th Ctrl Delay		48.2
HCM 6th LOS		D

Notes

* HCM 6th computational engine requires equal clearance times for the phases crossing the barrier.



Movement	EBL	EBT	EBR	WBL	WBT	WBR	NBL	NBT	NBR	SBL	SBT	SBR
Lane Configurations												
Traffic Volume (veh/h)	0	0	0	159	6	63	0	607	325	0	744	73
Future Volume (veh/h)	0	0	0	159	6	63	0	607	325	0	744	73
Initial Q (Qb), veh				0	0	0	0	0	0	0	0	0
Ped-Bike Adj(A_pbT)				1.00		0.97	1.00		0.96	1.00		0.96
Parking Bus, Adj				1.00	1.00	1.00	1.00	1.00	1.00	1.00	1.00	1.00
Work Zone On Approach					No			No			No	
Adj Sat Flow, veh/h/ln				1870	1870	1870	0	1870	1870	0	1870	1870
Adj Flow Rate, veh/h				199	8	79	0	653	349	0	886	87
Peak Hour Factor				0.80	0.80	0.80	0.93	0.93	0.93	0.84	0.84	0.84
Percent Heavy Veh, %				2	2	2	0	2	2	0	2	2
Cap, veh/h				383	15	341	0	1588	681	0	2105	206
Arrive On Green				0.22	0.22	0.22	0.00	0.45	0.45	0.00	0.45	0.45
Sat Flow, veh/h				1716	69	1530	0	3647	1523	0	4877	460
Grp Volume(v), veh/h				207	0	79	0	653	349	0	639	334
Grp Sat Flow(s),veh/h/ln				1785	0	1530	0	1777	1523	0	1702	1765
Q Serve(g_s), s				3.9	0.0	1.6	0.0	4.7	6.2	0.0	4.8	4.9
Cycle Q Clear(g_c), s				3.9	0.0	1.6	0.0	4.7	6.2	0.0	4.8	4.9
Prop In Lane				0.96		1.00	0.00		1.00	0.00		0.26
Lane Grp Cap(c), veh/h				398	0	341	0	1588	681	0	1521	789
V/C Ratio(X)				0.52	0.00	0.23	0.00	0.41	0.51	0.00	0.42	0.42
Avail Cap(c_a), veh/h				2209	0	1894	0	5684	2436	0	5445	2824
HCM Platoon Ratio				1.00	1.00	1.00	1.00	1.00	1.00	1.00	1.00	1.00
Upstream Filter(I)				1.00	0.00	1.00	0.00	1.00	1.00	0.00	1.00	1.00
Uniform Delay (d), s/veh				12.9	0.0	12.1	0.0	7.1	7.5	0.0	7.1	7.1
Incr Delay (d2), s/veh				1.1	0.0	0.3	0.0	0.2	0.6	0.0	0.2	0.4
Initial Q Delay(d3),s/veh				0.0	0.0	0.0	0.0	0.0	0.0	0.0	0.0	0.0
%ile BackOfQ(50%),veh/ln				1.4	0.0	0.5	0.0	1.0	1.2	0.0	1.0	1.1
Unsig. Movement Delay, s/veh												
LnGrp Delay(d),s/veh				14.0	0.0	12.4	0.0	7.3	8.1	0.0	7.3	7.5
LnGrp LOS				B	A	B	A	A	A	A	A	A
Approach Vol, veh/h					286			1002			973	
Approach Delay, s/veh					13.5			7.6			7.4	
Approach LOS					B			A			A	

Timer - Assigned Phs	2		6		8	
Phs Duration (G+Y+Rc), s	23.3		23.3		14.6	
Change Period (Y+Rc), s	6.4		6.4		6.1	
Max Green Setting (Gmax), s	60.6		60.6		46.9	
Max Q Clear Time (g_c+I1), s	8.2		6.9		5.9	
Green Ext Time (p_c), s	6.4		7.4		1.6	

Intersection Summary		
HCM 6th Ctrl Delay	8.2	
HCM 6th LOS	A	



Movement	EBL	EBT	EBR	WBL	WBT	WBR	NBL	NBT	NBR	SBL	SBT	SBR
Lane Configurations												
Traffic Volume (veh/h)	50	2	403	0	0	0	0	882	222	127	776	0
Future Volume (veh/h)	50	2	403	0	0	0	0	882	222	127	776	0
Initial Q (Qb), veh	0	0	0				0	0	0	0	0	0
Ped-Bike Adj(A_pbT)	1.00		0.95				1.00		0.96	1.00		1.00
Parking Bus, Adj	1.00	1.00	1.00				1.00	1.00	1.00	1.00	1.00	1.00
Work Zone On Approach		No						No			No	
Adj Sat Flow, veh/h/ln	1870	1870	1870				0	1870	1870	1870	1870	0
Adj Flow Rate, veh/h	58	2	469				0	928	234	141	862	0
Peak Hour Factor	0.86	0.86	0.86				0.95	0.95	0.95	0.90	0.90	0.90
Percent Heavy Veh, %	2	2	2				0	2	2	2	2	0
Cap, veh/h	434	15	664				0	1331	568	183	1998	0
Arrive On Green	0.25	0.25	0.25				0.00	0.37	0.37	0.10	0.56	0.00
Sat Flow, veh/h	1725	59	2639				0	3647	1517	1781	3647	0
Grp Volume(v), veh/h	60	0	469				0	928	234	141	862	0
Grp Sat Flow(s),veh/h/ln	1784	0	1320				0	1777	1517	1781	1777	0
Q Serve(g_s), s	1.7	0.0	10.9				0.0	14.8	7.7	5.2	9.4	0.0
Cycle Q Clear(g_c), s	1.7	0.0	10.9				0.0	14.8	7.7	5.2	9.4	0.0
Prop In Lane	0.97		1.00				0.00		1.00	1.00		0.00
Lane Grp Cap(c), veh/h	449	0	664				0	1331	568	183	1998	0
V/C Ratio(X)	0.13	0.00	0.71				0.00	0.70	0.41	0.77	0.43	0.00
Avail Cap(c_a), veh/h	954	0	1412				0	2468	1053	512	3792	0
HCM Platoon Ratio	1.00	1.00	1.00				1.00	1.00	1.00	1.00	1.00	1.00
Upstream Filter(I)	1.00	0.00	1.00				0.00	1.00	1.00	1.00	1.00	0.00
Uniform Delay (d), s/veh	19.5	0.0	22.9				0.0	17.8	15.5	29.3	8.5	0.0
Incr Delay (d2), s/veh	0.1	0.0	1.4				0.0	0.7	0.5	6.7	0.1	0.0
Initial Q Delay(d3),s/veh	0.0	0.0	0.0				0.0	0.0	0.0	0.0	0.0	0.0
%ile BackOfQ(50%),veh/ln	0.7	0.0	3.3				0.0	5.3	2.4	2.4	2.8	0.0
Unsig. Movement Delay, s/veh												
LnGrp Delay(d),s/veh	19.6	0.0	24.3				0.0	18.4	16.0	36.0	8.6	0.0
LnGrp LOS	B	A	C				A	B	B	D	A	A
Approach Vol, veh/h		529						1162			1003	
Approach Delay, s/veh		23.7						17.9			12.5	
Approach LOS		C						B			B	

Timer - Assigned Phs	1	2	4	6
Phs Duration (G+Y+Rc), s	12.6	31.5	23.0	44.1
Change Period (Y+Rc), s	5.7	6.4	6.1	6.4
Max Green Setting (Gmax), s	13.3	46.6	35.9	71.6
Max Q Clear Time (g_c+I1), s	11.2	16.8	12.9	11.4
Green Ext Time (p_c), s	0.3	8.1	2.4	6.9

Intersection Summary	
HCM 6th Ctrl Delay	17.0
HCM 6th LOS	B

Notes

* HCM 6th computational engine requires equal clearance times for the phases crossing the barrier.



Movement	EBL	EBT	EBR	WBL	WBT	WBR	NBL	NBT	NBR	SBL	SBT	SBR
Lane Configurations												
Traffic Volume (veh/h)	43	77	34	3	114	83	29	41	3	114	112	37
Future Volume (veh/h)	43	77	34	3	114	83	29	41	3	114	112	37
Initial Q (Qb), veh	0	0	0	0	0	0	0	0	0	0	0	0
Ped-Bike Adj(A_pbT)	1.00		0.96	1.00		0.95	1.00		0.98	1.00		0.96
Parking Bus, Adj	1.00	1.00	1.00	1.00	1.00	1.00	1.00	1.00	1.00	1.00	1.00	1.00
Work Zone On Approach		No			No			No			No	
Adj Sat Flow, veh/h/ln	1870	1870	1870	1870	1870	1870	1870	1870	1870	1870	1870	1870
Adj Flow Rate, veh/h	48	87	38	3	125	91	42	59	4	123	120	40
Peak Hour Factor	0.89	0.89	0.89	0.91	0.91	0.91	0.69	0.69	0.69	0.93	0.93	0.93
Percent Heavy Veh, %	2	2	2	2	2	2	2	2	2	2	2	2
Cap, veh/h	78	353	287	7	279	225	72	1550	675	157	1271	404
Arrive On Green	0.04	0.19	0.19	0.00	0.15	0.15	0.04	0.44	0.44	0.09	0.48	0.48
Sat Flow, veh/h	1781	1870	1523	1781	1870	1512	1781	3554	1547	1781	2625	833
Grp Volume(v), veh/h	48	87	38	3	125	91	42	59	4	123	79	81
Grp Sat Flow(s),veh/h/ln	1781	1870	1523	1781	1870	1512	1781	1777	1547	1781	1777	1682
Q Serve(g_s), s	1.8	2.7	1.4	0.1	4.2	3.7	1.6	0.7	0.1	4.6	1.7	1.8
Cycle Q Clear(g_c), s	1.8	2.7	1.4	0.1	4.2	3.7	1.6	0.7	0.1	4.6	1.7	1.8
Prop In Lane	1.00		1.00	1.00		1.00	1.00		1.00	1.00		0.50
Lane Grp Cap(c), veh/h	78	353	287	7	279	225	72	1550	675	157	860	814
V/C Ratio(X)	0.62	0.25	0.13	0.42	0.45	0.40	0.59	0.04	0.01	0.78	0.09	0.10
Avail Cap(c_a), veh/h	177	982	800	130	933	754	166	1550	675	270	860	814
HCM Platoon Ratio	1.00	1.00	1.00	1.00	1.00	1.00	1.00	1.00	1.00	1.00	1.00	1.00
Upstream Filter(I)	1.00	1.00	1.00	1.00	1.00	1.00	1.00	1.00	1.00	1.00	1.00	1.00
Uniform Delay (d), s/veh	32.2	23.7	23.1	34.1	26.6	26.4	32.4	11.1	10.9	30.6	9.5	9.6
Incr Delay (d2), s/veh	2.9	0.4	0.2	13.6	1.1	1.2	2.8	0.0	0.0	3.2	0.2	0.2
Initial Q Delay(d3),s/veh	0.0	0.0	0.0	0.0	0.0	0.0	0.0	0.0	0.0	0.0	0.0	0.0
%ile BackOfQ(50%),veh/ln	0.8	1.2	0.5	0.1	1.9	1.4	0.7	0.2	0.0	2.1	0.6	0.6
Unsig. Movement Delay, s/veh												
LnGrp Delay(d),s/veh	35.2	24.0	23.3	47.6	27.7	27.6	35.2	11.1	10.9	33.8	9.8	9.8
LnGrp LOS	D	C	C	D	C	C	D	B	B	C	A	A
Approach Vol, veh/h		173			219			105			283	
Approach Delay, s/veh		27.0			27.9			20.7			20.2	
Approach LOS		C			C			C			C	

Timer - Assigned Phs	1	2	3	4	5	6	7	8
Phs Duration (G+Y+Rc), s	7.4	38.3	7.6	15.3	10.6	35.0	4.9	18.0
Change Period (Y+Rc), s	4.6	5.1	4.6	5.1	4.6	5.1	4.6	5.1
Max Green Setting (Gmax), s	6.4	33.2	6.8	34.2	10.4	29.2	5.0	36.0
Max Q Clear Time (g_c+I1), s	3.6	3.8	3.8	6.2	6.6	2.7	2.1	4.7
Green Ext Time (p_c), s	0.0	1.3	0.0	1.0	0.0	0.4	0.0	0.6

Intersection Summary	
HCM 6th Ctrl Delay	24.0
HCM 6th LOS	C



Movement	EBL	EBT	EBR	WBL	WBT	WBR	NBL	NBT	NBR	SBL	SBT	SBR
Lane Configurations												
Traffic Volume (veh/h)	223	81	149	75	74	341	152	491	61	437	498	166
Future Volume (veh/h)	223	81	149	75	74	341	152	491	61	437	498	166
Initial Q (Qb), veh	0	0	0	0	0	0	0	0	0	0	0	0
Ped-Bike Adj(A_pbT)	1.00		0.96	1.00		0.97	1.00		0.96	1.00		0.97
Parking Bus, Adj	1.00	1.00	1.00	1.00	1.00	1.00	1.00	1.00	1.00	1.00	1.00	1.00
Work Zone On Approach		No			No			No			No	
Adj Sat Flow, veh/h/ln	1870	1870	1870	1870	1870	1870	1870	1870	1870	1870	1870	1870
Adj Flow Rate, veh/h	251	91	167	101	100	461	205	664	82	514	586	195
Peak Hour Factor	0.89	0.89	0.89	0.74	0.74	0.74	0.74	0.74	0.74	0.85	0.85	0.85
Percent Heavy Veh, %	2	2	2	2	2	2	2	2	2	2	2	2
Cap, veh/h	315	331	269	451	474	652	214	689	85	296	696	231
Arrive On Green	0.18	0.18	0.18	0.25	0.25	0.25	0.12	0.22	0.22	0.17	0.27	0.27
Sat Flow, veh/h	1781	1870	1520	1781	1870	1534	1781	3169	391	1781	2597	862
Grp Volume(v), veh/h	251	91	167	101	100	461	205	372	374	514	400	381
Grp Sat Flow(s),veh/h/ln	1781	1870	1520	1781	1870	1534	1781	1777	1783	1781	1777	1683
Q Serve(g_s), s	19.2	6.0	14.4	6.4	6.0	35.5	16.3	29.4	29.5	23.6	30.3	30.4
Cycle Q Clear(g_c), s	19.2	6.0	14.4	6.4	6.0	35.5	16.3	29.4	29.5	23.6	30.3	30.4
Prop In Lane	1.00		1.00	1.00		1.00	1.00		0.22	1.00		0.51
Lane Grp Cap(c), veh/h	315	331	269	451	474	652	214	386	388	296	476	451
V/C Ratio(X)	0.80	0.28	0.62	0.22	0.21	0.71	0.96	0.96	0.97	1.74	0.84	0.84
Avail Cap(c_a), veh/h	414	434	353	451	474	652	214	386	388	296	479	453
HCM Platoon Ratio	1.00	1.00	1.00	1.00	1.00	1.00	1.00	1.00	1.00	1.00	1.00	1.00
Upstream Filter(I)	1.00	1.00	1.00	1.00	1.00	1.00	1.00	1.00	1.00	1.00	1.00	1.00
Uniform Delay (d), s/veh	56.1	50.6	54.1	42.0	41.9	34.3	62.2	55.0	55.1	59.3	49.2	49.2
Incr Delay (d2), s/veh	9.3	0.6	3.3	0.1	0.1	3.0	48.7	37.0	37.4	345.8	15.3	16.3
Initial Q Delay(d3),s/veh	0.0	0.0	0.0	0.0	0.0	0.0	0.0	0.0	0.0	0.0	0.0	0.0
%ile BackOfQ(50%),veh/ln	9.3	2.8	5.7	2.8	2.8	13.5	10.2	16.9	17.1	38.9	15.2	14.6
Unsig. Movement Delay, s/veh												
LnGrp Delay(d),s/veh	65.3	51.3	57.4	42.1	41.9	37.3	110.9	92.0	92.5	405.1	64.4	65.5
LnGrp LOS	E	D	E	D	D	D	F	F	F	F	E	E
Approach Vol, veh/h		509			662			951			1295	
Approach Delay, s/veh		60.2			38.7			96.3			200.0	
Approach LOS		E			D			F			F	

Timer - Assigned Phs	1	2		4	5	6		8
Phs Duration (G+Y+Rc), s	21.8	45.4		42.4	29.0	38.2		32.5
Change Period (Y+Rc), s	* 4.7	* 7.3		6.4	5.4	7.3		7.4
Max Green Setting (Gmax), s	* 17	* 38		36.0	23.6	30.9		33.0
Max Q Clear Time (g_c+I1), s	8.3	32.4		37.5	25.6	31.5		21.2
Green Ext Time (p_c), s	0.0	3.9		0.0	0.0	0.0		2.2

Intersection Summary		
HCM 6th Ctrl Delay	119.0	
HCM 6th LOS	F	

Notes

* HCM 6th computational engine requires equal clearance times for the phases crossing the barrier.

Intersection	
Int Delay, s/veh	0.4

Movement	EBL	EBR	NBL	NBT	SBT	SBR
Lane Configurations						
Traffic Vol, veh/h	7	131	49	420	531	7
Future Vol, veh/h	7	131	49	420	531	7
Conflicting Peds, #/hr	10	10	10	0	0	10
Sign Control	Free	Free	Free	Free	Stop	Stop
RT Channelized	-	None	-	None	-	None
Storage Length	0	-	-	-	-	-
Veh in Median Storage, #	2	-	-	0	0	-
Grade, %	0	-	-	0	0	-
Peak Hour Factor	85	85	85	85	73	73
Heavy Vehicles, %	2	2	2	2	2	2
Mvmt Flow	8	154	58	494	727	10

Major/Minor	Major1		Minor2	
Conflicting Flow All	10	0	620	20
Stage 1	-	-	10	-
Stage 2	-	-	610	-
Critical Hdwy	4.14	-	6.54	6.94
Critical Hdwy Stg 1	-	-	-	-
Critical Hdwy Stg 2	-	-	5.54	-
Follow-up Hdwy	2.22	-	4.02	3.32
Pot Cap-1 Maneuver	1608	-	~ 402	1053
Stage 1	-	-	-	-
Stage 2	-	-	~ 483	-
Platoon blocked, %		-		
Mov Cap-1 Maneuver	1593	-	0	1033
Mov Cap-2 Maneuver	-	-	0	-
Stage 1	-	-	0	-
Stage 2	-	-	0	-

Approach	NB	SB
HCM Control Delay, s	0.9	
HCM LOS		-

Minor Lane/Major Mvmt	NBL	NBT	SBLn1	SBLn2
Capacity (veh/h)	1593	-	-	1033
HCM Lane V/C Ratio	0.036	-	-	0.361
HCM Control Delay (s)	7.3	0.1	-	10.4
HCM Lane LOS	A	A	-	B
HCM 95th %tile Q(veh)	0.1	-	-	1.7

Notes			
~: Volume exceeds capacity	$: Delay exceeds 300s	+: Computation Not Defined	*: All major volume in platoon

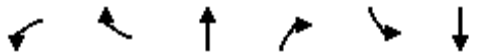

Movement	WBL	WBR	NBT	NBR	SBL	SBT
Lane Configurations						
Traffic Volume (veh/h)	114	239	269	65	208	475
Future Volume (veh/h)	114	239	269	65	208	475
Initial Q (Qb), veh	0	0	0	0	0	0
Ped-Bike Adj(A_pbT)	1.00	1.00		0.94	1.00	
Parking Bus, Adj	1.00	1.00	1.00	1.00	1.00	1.00
Work Zone On Approach	No		No			No
Adj Sat Flow, veh/h/ln	1870	1870	1870	1870	1870	1870
Adj Flow Rate, veh/h	211	443	292	71	224	511
Peak Hour Factor	0.54	0.54	0.92	0.92	0.93	0.93
Percent Heavy Veh, %	2	2	2	2	2	2
Cap, veh/h	580	516	679	162	273	870
Arrive On Green	0.33	0.33	0.24	0.24	0.15	0.47
Sat Flow, veh/h	1781	1585	2906	669	1781	1870
Grp Volume(v), veh/h	211	443	182	181	224	511
Grp Sat Flow(s),veh/h/ln	1781	1585	1777	1704	1781	1870
Q Serve(g_s), s	6.1	17.5	5.8	6.0	8.1	13.5
Cycle Q Clear(g_c), s	6.1	17.5	5.8	6.0	8.1	13.5
Prop In Lane	1.00	1.00		0.39	1.00	
Lane Grp Cap(c), veh/h	580	516	429	412	273	870
V/C Ratio(X)	0.36	0.86	0.42	0.44	0.82	0.59
Avail Cap(c_a), veh/h	1432	1274	1067	1023	993	2337
HCM Platoon Ratio	1.00	1.00	1.00	1.00	1.00	1.00
Upstream Filter(I)	1.00	1.00	1.00	1.00	1.00	1.00
Uniform Delay (d), s/veh	17.3	21.1	21.4	21.5	27.4	13.2
Incr Delay (d2), s/veh	0.4	4.3	2.4	2.7	2.3	2.3
Initial Q Delay(d3),s/veh	0.0	0.0	0.0	0.0	0.0	0.0
%ile BackOfQ(50%),veh/ln	2.3	0.6	2.5	2.5	3.3	5.2
Unsig. Movement Delay, s/veh						
LnGrp Delay(d),s/veh	17.7	25.4	23.9	24.2	29.7	15.4
LnGrp LOS	B	C	C	C	C	B
Approach Vol, veh/h	654		363			735
Approach Delay, s/veh	22.9		24.0			19.8
Approach LOS	C		C			B

Timer - Assigned Phs		2		4	5	6
Phs Duration (G+Y+Rc), s		38.9		28.0	15.0	24.0
Change Period (Y+Rc), s		* 7.8		6.2	* 4.7	7.8
Max Green Setting (Gmax), s		* 84		53.8	* 37	40.2
Max Q Clear Time (g_c+I1), s		15.5		19.5	10.1	8.0
Green Ext Time (p_c), s		10.3		2.3	0.3	5.5

Intersection Summary	
HCM 6th Ctrl Delay	21.8
HCM 6th LOS	C

Notes

* HCM 6th computational engine requires equal clearance times for the phases crossing the barrier.

Intersection	
Int Delay, s/veh	1.6

Movement	EBT	EBR	WBL	WBT	NBL	NBR
Lane Configurations						
Traffic Vol, veh/h	343	43	49	230	16	44
Future Vol, veh/h	343	43	49	230	16	44
Conflicting Peds, #/hr	0	10	10	0	10	10
Sign Control	Free	Free	Free	Free	Stop	Stop
RT Channelized	-	None	-	None	-	None
Storage Length	-	-	-	-	0	-
Veh in Median Storage, #	0	-	-	0	0	-
Grade, %	0	-	-	0	0	-
Peak Hour Factor	67	67	91	91	86	86
Heavy Vehicles, %	2	2	2	2	2	2
Mvmt Flow	512	64	54	253	19	51

Major/Minor	Major1		Major2		Minor1	
Conflicting Flow All	0	0	586	0	925	564
Stage 1	-	-	-	-	554	-
Stage 2	-	-	-	-	371	-
Critical Hdwy	-	-	4.12	-	6.42	6.22
Critical Hdwy Stg 1	-	-	-	-	5.42	-
Critical Hdwy Stg 2	-	-	-	-	5.42	-
Follow-up Hdwy	-	-	2.218	-	3.518	3.318
Pot Cap-1 Maneuver	-	-	989	-	299	525
Stage 1	-	-	-	-	575	-
Stage 2	-	-	-	-	698	-
Platoon blocked, %	-	-		-		
Mov Cap-1 Maneuver	-	-	980	-	274	515
Mov Cap-2 Maneuver	-	-	-	-	274	-
Stage 1	-	-	-	-	569	-
Stage 2	-	-	-	-	647	-

Approach	EB	WB	NB
HCM Control Delay, s	0	1.6	15.4
HCM LOS			C

Minor Lane/Major Mvmt	NBLn1	EBT	EBR	WBL	WBT
Capacity (veh/h)	417	-	-	980	-
HCM Lane V/C Ratio	0.167	-	-	0.055	-
HCM Control Delay (s)	15.4	-	-	8.9	0
HCM Lane LOS	C	-	-	A	A
HCM 95th %tile Q(veh)	0.6	-	-	0.2	-

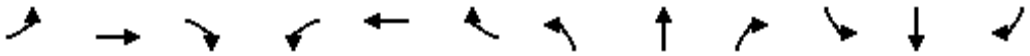

Movement	EBL	EBT	EBR	WBL	WBT	WBR	NBL	NBT	NBR	SBL	SBT	SBR
Lane Configurations												
Traffic Volume (veh/h)	90	204	91	43	111	198	101	386	37	290	481	66
Future Volume (veh/h)	90	204	91	43	111	198	101	386	37	290	481	66
Initial Q (Qb), veh	0	0	0	0	0	0	0	0	0	0	0	0
Ped-Bike Adj(A_pbT)	1.00		0.97	1.00		1.00	1.00		0.96	1.00		0.97
Parking Bus, Adj	1.00	1.00	1.00	1.00	1.00	1.00	1.00	1.00	1.00	1.00	1.00	1.00
Work Zone On Approach		No			No			No			No	
Adj Sat Flow, veh/h/ln	1870	1870	1870	1870	1870	1870	1870	1870	1870	1870	1870	1870
Adj Flow Rate, veh/h	132	300	134	48	123	0	103	394	38	309	512	70
Peak Hour Factor	0.68	0.68	0.68	0.90	0.90	0.90	0.98	0.98	0.98	0.94	0.94	0.94
Percent Heavy Veh, %	2	2	2	2	2	2	2	2	2	2	2	2
Cap, veh/h	172	557	242	78	643		135	764	328	371	1088	148
Arrive On Green	0.10	0.23	0.23	0.04	0.18	0.00	0.08	0.21	0.21	0.21	0.35	0.35
Sat Flow, veh/h	1781	2383	1035	1781	3554	1585	1781	3554	1528	1781	3131	426
Grp Volume(v), veh/h	132	221	213	48	123	0	103	394	38	309	290	292
Grp Sat Flow(s),veh/h/ln	1781	1777	1641	1781	1777	1585	1781	1777	1528	1781	1777	1780
Q Serve(g_s), s	4.9	7.3	7.7	1.8	2.0	0.0	3.8	6.6	1.3	11.2	8.5	8.6
Cycle Q Clear(g_c), s	4.9	7.3	7.7	1.8	2.0	0.0	3.8	6.6	1.3	11.2	8.5	8.6
Prop In Lane	1.00		0.63	1.00		1.00	1.00		1.00	1.00		0.24
Lane Grp Cap(c), veh/h	172	415	384	78	643		135	764	328	371	617	618
V/C Ratio(X)	0.77	0.53	0.55	0.61	0.19		0.76	0.52	0.12	0.83	0.47	0.47
Avail Cap(c_a), veh/h	540	1160	1072	276	1792		461	1860	800	1070	1538	1541
HCM Platoon Ratio	1.00	1.00	1.00	1.00	1.00	1.00	1.00	1.00	1.00	1.00	1.00	1.00
Upstream Filter(I)	1.00	1.00	1.00	1.00	1.00	0.00	1.00	1.00	1.00	1.00	1.00	1.00
Uniform Delay (d), s/veh	29.6	22.6	22.7	31.6	23.4	0.0	30.5	23.3	21.3	25.5	17.1	17.1
Incr Delay (d2), s/veh	6.9	1.1	1.3	7.5	0.1	0.0	8.5	0.5	0.2	4.9	0.6	0.6
Initial Q Delay(d3),s/veh	0.0	0.0	0.0	0.0	0.0	0.0	0.0	0.0	0.0	0.0	0.0	0.0
%ile BackOfQ(50%),veh/ln	2.3	2.9	2.8	0.9	0.8	0.0	1.8	2.6	0.5	4.8	3.2	3.2
Unsig. Movement Delay, s/veh												
LnGrp Delay(d),s/veh	36.6	23.6	23.9	39.1	23.5	0.0	39.0	23.8	21.4	30.4	17.7	17.7
LnGrp LOS	D	C	C	D	C		D	C	C	C	B	B
Approach Vol, veh/h		566			171	A		535			891	
Approach Delay, s/veh		26.8			27.9			26.6			22.1	
Approach LOS		C			C			C			C	

Timer - Assigned Phs	1	2	3	4	5	6	7	8
Phs Duration (G+Y+Rc), s	18.6	20.2	7.6	20.8	9.7	29.2	11.1	17.3
Change Period (Y+Rc), s	4.6	5.8	4.6	5.1	4.6	5.8	4.6	5.1
Max Green Setting (Gmax), s	40.4	35.2	10.4	43.9	17.4	58.2	20.4	33.9
Max Q Clear Time (g_c+I1), s	13.2	8.6	3.8	9.7	5.8	10.6	6.9	4.0
Green Ext Time (p_c), s	0.9	2.6	0.0	2.6	0.2	3.6	0.2	0.7

Intersection Summary	
HCM 6th Ctrl Delay	24.9
HCM 6th LOS	C

Notes

Unsignalized Delay for [WBR] is excluded from calculations of the approach delay and intersection delay.

Intersection	
Intersection Delay, s/veh	9.9
Intersection LOS	A

Movement	EBL	EBT	EBR	WBL	WBT	WBR	NBL	NBT	NBR	SBL	SBT	SBR
Lane Configurations												
Traffic Vol, veh/h	38	71	8	7	74	44	9	39	32	33	33	36
Future Vol, veh/h	38	71	8	7	74	44	9	39	32	33	33	36
Peak Hour Factor	0.74	0.74	0.74	0.79	0.79	0.79	0.45	0.45	0.45	0.87	0.87	0.87
Heavy Vehicles, %	2	2	2	2	2	2	2	2	2	2	2	2
Mvmt Flow	51	96	11	9	94	56	20	87	71	38	38	41
Number of Lanes	0	1	1	0	1	0	0	1	0	0	1	1

Approach	EB	WB	NB	SB
Opposing Approach	WB	EB	SB	NB
Opposing Lanes	1	2	2	1
Conflicting Approach Left	SB	NB	EB	WB
Conflicting Lanes Left	2	1	2	1
Conflicting Approach Right	NB	SB	WB	EB
Conflicting Lanes Right	1	2	1	2
HCM Control Delay	10	10.1	10.3	8.9
HCM LOS	A	B	B	A

Lane	NBLn1	EBLn1	EBLn2	WBLn1	SBLn1	SBLn2
Vol Left, %	11%	35%	0%	6%	50%	0%
Vol Thru, %	49%	65%	0%	59%	50%	0%
Vol Right, %	40%	0%	100%	35%	0%	100%
Sign Control	Stop	Stop	Stop	Stop	Stop	Stop
Traffic Vol by Lane	80	109	8	125	66	36
LT Vol	9	38	0	7	33	0
Through Vol	39	71	0	74	33	0
RT Vol	32	0	8	44	0	36
Lane Flow Rate	178	147	11	158	76	41
Geometry Grp	6	7	7	6	7	7
Degree of Util (X)	0.263	0.232	0.014	0.235	0.123	0.056
Departure Headway (Hd)	5.327	5.66	4.779	5.338	5.837	4.878
Convergence, Y/N	Yes	Yes	Yes	Yes	Yes	Yes
Cap	668	630	742	668	609	727
Service Time	3.402	3.436	2.553	3.414	3.619	2.66
HCM Lane V/C Ratio	0.266	0.233	0.015	0.237	0.125	0.056
HCM Control Delay	10.3	10.2	7.6	10.1	9.4	8
HCM Lane LOS	B	B	A	B	A	A
HCM 95th-tile Q	1.1	0.9	0	0.9	0.4	0.2

Intersection	
Intersection Delay, s/veh	10.9
Intersection LOS	B

Movement	EBL	EBT	EBR	WBL	WBT	WBR	NBL	NBT	NBR	SBL	SBT	SBR
Lane Configurations												
Traffic Vol, veh/h	4	63	23	2	70	132	21	74	1	81	121	8
Future Vol, veh/h	4	63	23	2	70	132	21	74	1	81	121	8
Peak Hour Factor	0.68	0.68	0.68	0.66	0.66	0.66	0.70	0.70	0.70	0.84	0.84	0.84
Heavy Vehicles, %	2	2	2	2	2	2	2	2	2	2	2	2
Mvmt Flow	6	93	34	3	106	200	30	106	1	96	144	10
Number of Lanes	0	1	0	0	1	0	0	1	0	0	1	0

Approach	EB	WB	NB	SB
Opposing Approach	WB	EB	SB	NB
Opposing Lanes	1	1	1	1
Conflicting Approach Left	SB	NB	EB	WB
Conflicting Lanes Left	1	1	1	1
Conflicting Approach Right	NB	SB	WB	EB
Conflicting Lanes Right	1	1	1	1
HCM Control Delay	9.7	11.3	10	11.5
HCM LOS	A	B	A	B

Lane	NBLn1	EBLn1	WBLn1	SBLn1
Vol Left, %	22%	4%	1%	39%
Vol Thru, %	77%	70%	34%	58%
Vol Right, %	1%	26%	65%	4%
Sign Control	Stop	Stop	Stop	Stop
Traffic Vol by Lane	96	90	204	210
LT Vol	21	4	2	81
Through Vol	74	63	70	121
RT Vol	1	23	132	8
Lane Flow Rate	137	132	309	250
Geometry Grp	1	1	1	1
Degree of Util (X)	0.21	0.196	0.417	0.371
Departure Headway (Hd)	5.513	5.318	4.856	5.345
Convergence, Y/N	Yes	Yes	Yes	Yes
Cap	650	674	745	673
Service Time	3.555	3.357	2.856	3.382
HCM Lane V/C Ratio	0.211	0.196	0.415	0.371
HCM Control Delay	10	9.7	11.3	11.5
HCM Lane LOS	A	A	B	B
HCM 95th-tile Q	0.8	0.7	2.1	1.7

Intersection	
Intersection Delay, s/veh	14.5
Intersection LOS	B

Movement	EBL	EBT	EBR	WBL	WBT	WBR	NBL	NBT	NBR	SBL	SBT	SBR
Lane Configurations												
Traffic Vol, veh/h	84	165	13	9	112	48	36	117	36	97	174	55
Future Vol, veh/h	84	165	13	9	112	48	36	117	36	97	174	55
Peak Hour Factor	0.86	0.86	0.86	0.86	0.86	0.86	0.65	0.65	0.65	0.85	0.85	0.85
Heavy Vehicles, %	2	2	2	2	2	2	2	2	2	2	2	2
Mvmt Flow	98	192	15	10	130	56	55	180	55	114	205	65
Number of Lanes	1	1	0	0	1	0	1	1	0	1	1	0

Approach	EB	WB	NB	SB
Opposing Approach	WB	EB	SB	NB
Opposing Lanes	1	2	2	2
Conflicting Approach Left	SB	NB	EB	WB
Conflicting Lanes Left	2	2	2	1
Conflicting Approach Right	NB	SB	WB	EB
Conflicting Lanes Right	2	2	1	2
HCM Control Delay	13.8	14.8	14.4	14.9
HCM LOS	B	B	B	B

Lane	NBLn1	NBLn2	EBLn1	EBLn2	WBLn1	SBLn1	SBLn2
Vol Left, %	100%	0%	100%	0%	5%	100%	0%
Vol Thru, %	0%	76%	0%	93%	66%	0%	76%
Vol Right, %	0%	24%	0%	7%	28%	0%	24%
Sign Control	Stop	Stop	Stop	Stop	Stop	Stop	Stop
Traffic Vol by Lane	36	153	84	178	169	97	229
LT Vol	36	0	84	0	9	97	0
Through Vol	0	117	0	165	112	0	174
RT Vol	0	36	0	13	48	0	55
Lane Flow Rate	55	235	98	207	197	114	269
Geometry Grp	7	7	7	7	6	7	7
Degree of Util (X)	0.116	0.448	0.206	0.405	0.392	0.234	0.5
Departure Headway (Hd)	7.53	6.849	7.603	7.04	7.176	7.37	6.686
Convergence, Y/N	Yes	Yes	Yes	Yes	Yes	Yes	Yes
Cap	476	525	473	511	501	487	539
Service Time	5.274	4.592	5.346	4.783	5.222	5.111	4.427
HCM Lane V/C Ratio	0.116	0.448	0.207	0.405	0.393	0.234	0.499
HCM Control Delay	11.3	15.1	12.3	14.5	14.8	12.4	16
HCM Lane LOS	B	C	B	B	B	B	C
HCM 95th-tile Q	0.4	2.3	0.8	1.9	1.8	0.9	2.8



Movement	EBL	EBT	EBR	WBL	WBT	WBR	NBL	NBT	NBR	SBL	SBT	SBR
Lane Configurations												
Traffic Volume (veh/h)	37	219	41	1	110	69	21	115	3	98	301	41
Future Volume (veh/h)	37	219	41	1	110	69	21	115	3	98	301	41
Initial Q (Qb), veh	0	0	0	0	0	0	0	0	0	0	0	0
Ped-Bike Adj(A_pbT)	0.99		0.95	0.99		0.95	1.00		0.95	1.00		0.96
Parking Bus, Adj	1.00	1.00	1.00	1.00	1.00	1.00	1.00	1.00	1.00	1.00	1.00	1.00
Work Zone On Approach		No			No			No			No	
Adj Sat Flow, veh/h/ln	1870	1870	1870	1870	1870	1870	1870	1870	1870	1870	1870	1870
Adj Flow Rate, veh/h	50	296	55	1	116	73	25	135	4	113	346	47
Peak Hour Factor	0.74	0.74	0.74	0.95	0.95	0.95	0.85	0.85	0.85	0.87	0.87	0.87
Percent Heavy Veh, %	2	2	2	2	2	2	2	2	2	2	2	2
Cap, veh/h	103	408	72	55	317	198	69	545	16	165	570	77
Arrive On Green	0.30	0.30	0.30	0.30	0.30	0.30	0.04	0.30	0.30	0.09	0.36	0.36
Sat Flow, veh/h	139	1356	238	2	1052	658	1781	1804	53	1781	1602	218
Grp Volume(v), veh/h	401	0	0	190	0	0	25	0	139	113	0	393
Grp Sat Flow(s),veh/h/ln	1732	0	0	1711	0	0	1781	0	1858	1781	0	1819
Q Serve(g_s), s	6.9	0.0	0.0	0.0	0.0	0.0	0.9	0.0	3.7	4.1	0.0	11.7
Cycle Q Clear(g_c), s	13.7	0.0	0.0	5.8	0.0	0.0	0.9	0.0	3.7	4.1	0.0	11.7
Prop In Lane	0.12		0.14	0.01		0.38	1.00		0.03	1.00		0.12
Lane Grp Cap(c), veh/h	583	0	0	570	0	0	69	0	561	165	0	647
V/C Ratio(X)	0.69	0.00	0.00	0.33	0.00	0.00	0.36	0.00	0.25	0.68	0.00	0.61
Avail Cap(c_a), veh/h	1622	0	0	1618	0	0	251	0	1363	574	0	1655
HCM Platoon Ratio	1.00	1.00	1.00	1.00	1.00	1.00	1.00	1.00	1.00	1.00	1.00	1.00
Upstream Filter(I)	1.00	0.00	0.00	1.00	0.00	0.00	1.00	0.00	1.00	1.00	0.00	1.00
Uniform Delay (d), s/veh	20.8	0.0	0.0	18.2	0.0	0.0	30.9	0.0	17.4	29.0	0.0	17.5
Incr Delay (d2), s/veh	1.5	0.0	0.0	0.3	0.0	0.0	1.2	0.0	1.1	1.9	0.0	4.2
Initial Q Delay(d3),s/veh	0.0	0.0	0.0	0.0	0.0	0.0	0.0	0.0	0.0	0.0	0.0	0.0
%ile BackOfQ(50%),veh/ln	5.4	0.0	0.0	2.2	0.0	0.0	0.4	0.0	1.6	1.7	0.0	5.0
Unsig. Movement Delay, s/veh												
LnGrp Delay(d),s/veh	22.3	0.0	0.0	18.5	0.0	0.0	32.1	0.0	18.5	30.9	0.0	21.7
LnGrp LOS	C	A	A	B	A	A	C	A	B	C	A	C
Approach Vol, veh/h		401			190			164			506	
Approach Delay, s/veh		22.3			18.5			20.5			23.8	
Approach LOS		C			B			C			C	

Timer - Assigned Phs	1	2		4	5	6		8
Phs Duration (G+Y+Rc), s	7.3	31.4		27.4	10.8	27.9		27.4
Change Period (Y+Rc), s	* 4.7	7.9		7.5	* 4.7	* 7.9		7.5
Max Green Setting (Gmax), s	* 9.3	60.1		60.5	* 21	* 49		60.5
Max Q Clear Time (g_c+I1), s	2.9	13.7		7.8	6.1	5.7		15.7
Green Ext Time (p_c), s	0.0	8.8		1.3	0.1	2.5		2.9

Intersection Summary		
HCM 6th Ctrl Delay	22.1	
HCM 6th LOS	C	

Notes

* HCM 6th computational engine requires equal clearance times for the phases crossing the barrier.

Intersection	
Int Delay, s/veh	2.6

Movement	EBL	EBT	EBR	WBL	WBT	WBR	NBL	NBT	NBR	SBL	SBT	SBR
Lane Configurations		⇕			⇕			⇕			⇕	
Traffic Vol, veh/h	15	306	0	0	177	37	0	0	0	60	0	11
Future Vol, veh/h	15	306	0	0	177	37	0	0	0	60	0	11
Conflicting Peds, #/hr	10	0	10	10	0	10	10	0	10	10	0	10
Sign Control	Free	Free	Free	Free	Free	Free	Stop	Stop	Stop	Stop	Stop	Stop
RT Channelized	-	-	None	-	-	None	-	-	None	-	-	None
Storage Length	-	-	-	-	-	-	-	-	-	-	-	-
Veh in Median Storage, #	-	0	-	-	0	-	-	0	-	-	0	-
Grade, %	-	0	-	-	0	-	-	0	-	-	0	-
Peak Hour Factor	82	82	82	95	95	95	92	92	92	68	68	68
Heavy Vehicles, %	2	2	2	2	2	2	2	2	2	2	2	2
Mvmt Flow	18	373	0	0	186	39	0	0	0	88	0	16

Major/Minor	Major1			Major2			Minor1			Minor2		
Conflicting Flow All	235	0	0	383	0	0	643	654	393	635	635	226
Stage 1	-	-	-	-	-	-	419	419	-	216	216	-
Stage 2	-	-	-	-	-	-	224	235	-	419	419	-
Critical Hdwy	4.12	-	-	4.12	-	-	7.12	6.52	6.22	7.12	6.52	6.22
Critical Hdwy Stg 1	-	-	-	-	-	-	6.12	5.52	-	6.12	5.52	-
Critical Hdwy Stg 2	-	-	-	-	-	-	6.12	5.52	-	6.12	5.52	-
Follow-up Hdwy	2.218	-	-	2.218	-	-	3.518	4.018	3.318	3.518	4.018	3.318
Pot Cap-1 Maneuver	1332	-	-	1175	-	-	386	386	656	391	396	813
Stage 1	-	-	-	-	-	-	612	590	-	786	724	-
Stage 2	-	-	-	-	-	-	779	710	-	612	590	-
Platoon blocked, %		-	-		-	-						
Mov Cap-1 Maneuver	1319	-	-	1164	-	-	366	372	644	378	381	798
Mov Cap-2 Maneuver	-	-	-	-	-	-	366	372	-	378	381	-
Stage 1	-	-	-	-	-	-	596	574	-	766	717	-
Stage 2	-	-	-	-	-	-	756	703	-	596	574	-

Approach	EB	WB	NB	SB
HCM Control Delay, s	0.4	0	0	16.7
HCM LOS			A	C

Minor Lane/Major Mvmt	NBLn1	EBL	EBT	EBR	WBL	WBT	WBR	SBLn1
Capacity (veh/h)	-	1319	-	-	1164	-	-	412
HCM Lane V/C Ratio	-	0.014	-	-	-	-	-	0.253
HCM Control Delay (s)	0	7.8	0	-	0	-	-	16.7
HCM Lane LOS	A	A	A	-	A	-	-	C
HCM 95th %tile Q(veh)	-	0	-	-	0	-	-	1

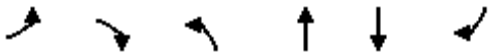

Movement	EBL	EBR	NBL	NBT	SBT	SBR
Lane Configurations						
Traffic Volume (veh/h)	84	286	150	385	507	53
Future Volume (veh/h)	84	286	150	385	507	53
Initial Q (Qb), veh	0	0	0	0	0	0
Ped-Bike Adj(A_pbT)	1.00	1.00	1.00			0.96
Parking Bus, Adj	1.00	1.00	1.00	1.00	1.00	1.00
Work Zone On Approach	No			No	No	
Adj Sat Flow, veh/h/ln	1870	1870	1870	1870	1870	1870
Adj Flow Rate, veh/h	108	367	161	414	545	57
Peak Hour Factor	0.78	0.78	0.93	0.93	0.93	0.93
Percent Heavy Veh, %	2	2	2	2	2	2
Cap, veh/h	428	569	211	1088	660	69
Arrive On Green	0.24	0.24	0.12	0.58	0.40	0.40
Sat Flow, veh/h	1781	1585	1781	1870	1657	173
Grp Volume(v), veh/h	108	367	161	414	0	602
Grp Sat Flow(s),veh/h/ln	1781	1585	1781	1870	0	1830
Q Serve(g_s), s	3.0	11.9	5.4	7.3	0.0	18.2
Cycle Q Clear(g_c), s	3.0	11.9	5.4	7.3	0.0	18.2
Prop In Lane	1.00	1.00	1.00			0.09
Lane Grp Cap(c), veh/h	428	569	211	1088	0	729
V/C Ratio(X)	0.25	0.64	0.76	0.38	0.00	0.83
Avail Cap(c_a), veh/h	577	701	981	3603	0	2400
HCM Platoon Ratio	1.00	1.00	1.00	1.00	1.00	1.00
Upstream Filter(I)	1.00	1.00	1.00	1.00	0.00	1.00
Uniform Delay (d), s/veh	19.0	16.5	26.4	6.9	0.0	16.7
Incr Delay (d2), s/veh	0.3	1.4	5.6	0.2	0.0	2.5
Initial Q Delay(d3),s/veh	0.0	0.0	0.0	0.0	0.0	0.0
%ile BackOfQ(50%),veh/ln	1.2	10.6	2.4	2.1	0.0	6.8
Unsig. Movement Delay, s/veh						
LnGrp Delay(d),s/veh	19.3	17.9	32.0	7.2	0.0	19.1
LnGrp LOS	B	B	C	A	A	B
Approach Vol, veh/h	475			575	602	
Approach Delay, s/veh	18.2			14.1	19.1	
Approach LOS	B			B	B	

Timer - Assigned Phs		2		4	5	6
Phs Duration (G+Y+Rc), s		41.9		19.9	11.3	30.6
Change Period (Y+Rc), s		6.0		5.0	4.0	6.0
Max Green Setting (Gmax), s		119.0		20.0	34.0	81.0
Max Q Clear Time (g_c+I1), s		9.3		13.9	7.4	20.2
Green Ext Time (p_c), s		2.6		0.9	0.4	4.4

Intersection Summary		
HCM 6th Ctrl Delay		17.1
HCM 6th LOS		B



Movement	WBL	WBR	NBT	NBR	SBL	SBT
Lane Configurations						
Traffic Volume (veh/h)	26	50	442	25	41	534
Future Volume (veh/h)	26	50	442	25	41	534
Initial Q (Qb), veh	0	0	0	0	0	0
Ped-Bike Adj(A_pbT)	1.00	1.00		0.96	1.00	
Parking Bus, Adj	1.00	1.00	1.00	1.00	1.00	1.00
Work Zone On Approach	No		No			No
Adj Sat Flow, veh/h/ln	1870	1870	1870	1870	1870	1870
Adj Flow Rate, veh/h	31	60	486	27	43	562
Peak Hour Factor	0.83	0.83	0.91	0.91	0.95	0.95
Percent Heavy Veh, %	2	2	2	2	2	2
Cap, veh/h	154	215	700	39	88	1072
Arrive On Green	0.09	0.09	0.40	0.40	0.05	0.57
Sat Flow, veh/h	1781	1585	1751	97	1781	1870
Grp Volume(v), veh/h	31	60	0	513	43	562
Grp Sat Flow(s),veh/h/ln	1781	1585	0	1848	1781	1870
Q Serve(g_s), s	0.5	1.1	0.0	7.5	0.8	5.9
Cycle Q Clear(g_c), s	0.5	1.1	0.0	7.5	0.8	5.9
Prop In Lane	1.00	1.00		0.05	1.00	
Lane Grp Cap(c), veh/h	154	215	0	739	88	1072
V/C Ratio(X)	0.20	0.28	0.00	0.69	0.49	0.52
Avail Cap(c_a), veh/h	827	814	0	5831	992	7175
HCM Platoon Ratio	1.00	1.00	1.00	1.00	1.00	1.00
Upstream Filter(I)	1.00	1.00	0.00	1.00	1.00	1.00
Uniform Delay (d), s/veh	13.7	12.5	0.0	8.1	15.0	4.2
Incr Delay (d2), s/veh	0.6	0.7	0.0	1.2	4.1	0.4
Initial Q Delay(d3),s/veh	0.0	0.0	0.0	0.0	0.0	0.0
%ile BackOfQ(50%),veh/ln	0.2	0.3	0.0	1.7	0.3	0.5
Unsig. Movement Delay, s/veh						
LnGrp Delay(d),s/veh	14.4	13.2	0.0	9.2	19.1	4.6
LnGrp LOS	B	B	A	A	B	A
Approach Vol, veh/h	91		513			605
Approach Delay, s/veh	13.6		9.2			5.6
Approach LOS	B		A			A

Timer - Assigned Phs	1	2				6	8
Phs Duration (G+Y+Rc), s	5.6	18.9				24.5	7.8
Change Period (Y+Rc), s	4.0	6.0				6.0	5.0
Max Green Setting (Gmax), s	18.0	102.0				124.0	15.0
Max Q Clear Time (g_c+I1), s	2.8	9.5				7.9	3.1
Green Ext Time (p_c), s	0.1	3.5				3.9	0.2

Intersection Summary	
HCM 6th Ctrl Delay	7.8
HCM 6th LOS	A



Movement	EBL	EBT	EBR	WBL	WBT	WBR	NBL	NBT	NBR	SBL	SBT	SBR
Lane Configurations												
Traffic Volume (veh/h)	3	73	1	35	70	157	2	6	9	244	26	2
Future Volume (veh/h)	3	73	1	35	70	157	2	6	9	244	26	2
Initial Q (Qb), veh	0	0	0	0	0	0	0	0	0	0	0	0
Ped-Bike Adj(A_pbT)	1.00		0.88	1.00		0.92	0.99		0.98	1.00		0.97
Parking Bus, Adj	1.00	1.00	1.00	1.00	1.00	1.00	1.00	1.00	1.00	1.00	1.00	1.00
Work Zone On Approach		No			No			No			No	
Adj Sat Flow, veh/h/ln	1870	1870	1870	1870	1870	1870	1870	1870	1870	1870	1870	1870
Adj Flow Rate, veh/h	3	83	1	38	75	169	4	11	17	271	29	2
Peak Hour Factor	0.88	0.88	0.88	0.93	0.93	0.93	0.53	0.53	0.53	0.90	0.90	0.90
Percent Heavy Veh, %	2	2	2	2	2	2	2	2	2	2	2	2
Cap, veh/h	5	143	2	90	177	211	135	370	531	910	1056	73
Arrive On Green	0.08	0.08	0.08	0.14	0.14	0.14	0.61	0.61	0.61	0.61	0.61	0.61
Sat Flow, veh/h	64	1774	21	619	1221	1461	161	605	868	1376	1725	119
Grp Volume(v), veh/h	87	0	0	113	0	169	32	0	0	271	0	31
Grp Sat Flow(s),veh/h/ln	1860	0	0	1839	0	1461	1634	0	0	1376	0	1844
Q Serve(g_s), s	5.0	0.0	0.0	6.2	0.0	12.4	0.0	0.0	0.0	9.4	0.0	0.7
Cycle Q Clear(g_c), s	5.0	0.0	0.0	6.2	0.0	12.4	0.8	0.0	0.0	10.3	0.0	0.7
Prop In Lane	0.03		0.01	0.34		1.00	0.12		0.53	1.00		0.06
Lane Grp Cap(c), veh/h	150	0	0	266	0	211	1037	0	0	910	0	1129
V/C Ratio(X)	0.58	0.00	0.00	0.42	0.00	0.80	0.03	0.00	0.00	0.30	0.00	0.03
Avail Cap(c_a), veh/h	486	0	0	580	0	460	1037	0	0	910	0	1129
HCM Platoon Ratio	1.00	1.00	1.00	1.00	1.00	1.00	1.00	1.00	1.00	1.00	1.00	1.00
Upstream Filter(I)	1.00	0.00	0.00	1.00	0.00	1.00	1.00	0.00	0.00	1.00	0.00	1.00
Uniform Delay (d), s/veh	49.2	0.0	0.0	43.3	0.0	45.9	8.5	0.0	0.0	10.3	0.0	8.5
Incr Delay (d2), s/veh	1.3	0.0	0.0	0.4	0.0	2.6	0.1	0.0	0.0	0.8	0.0	0.0
Initial Q Delay(d3),s/veh	0.0	0.0	0.0	0.0	0.0	0.0	0.0	0.0	0.0	0.0	0.0	0.0
%ile BackOfQ(50%),veh/ln	2.4	0.0	0.0	2.8	0.0	4.6	0.3	0.0	0.0	3.3	0.0	0.3
Unsig. Movement Delay, s/veh												
LnGrp Delay(d),s/veh	50.5	0.0	0.0	43.7	0.0	48.6	8.6	0.0	0.0	11.1	0.0	8.5
LnGrp LOS	D	A	A	D	A	D	A	A	A	B	A	A
Approach Vol, veh/h		87			282			32			302	
Approach Delay, s/veh		50.5			46.6			8.6			10.9	
Approach LOS		D			D			A			B	

Timer - Assigned Phs	2	4	6	8
Phs Duration (G+Y+Rc), s	74.0	15.0	74.0	22.1
Change Period (Y+Rc), s	6.0	6.0	6.0	6.0
Max Green Setting (Gmax), s	68.0	29.0	68.0	35.0
Max Q Clear Time (g_c+I1), s	2.8	7.0	12.3	14.4
Green Ext Time (p_c), s	0.0	0.2	2.6	0.6

Intersection Summary	
HCM 6th Ctrl Delay	30.0
HCM 6th LOS	C



Movement	EBL	EBT	EBR	WBL	WBT	WBR	NBL	NBT	NBR	SBL	SBT	SBR
Lane Configurations												
Traffic Volume (veh/h)	22	41	269	5	25	14	184	1071	6	51	1599	51
Future Volume (veh/h)	22	41	269	5	25	14	184	1071	6	51	1599	51
Initial Q (Qb), veh	0	0	0	0	0	0	0	0	0	0	0	0
Ped-Bike Adj(A_pbT)	1.00		0.94	1.00		0.96	1.00		0.96	1.00		0.98
Parking Bus, Adj	1.00	1.00	1.00	1.00	1.00	1.00	1.00	1.00	1.00	1.00	1.00	1.00
Work Zone On Approach		No			No			No			No	
Adj Sat Flow, veh/h/ln	1870	1870	1870	1870	1870	1870	1870	1870	1870	1870	1870	1870
Adj Flow Rate, veh/h	23	44	286	6	32	18	198	1152	6	54	1701	54
Peak Hour Factor	0.94	0.94	0.94	0.79	0.79	0.79	0.93	0.93	0.93	0.94	0.94	0.94
Percent Heavy Veh, %	2	2	2	2	2	2	2	2	2	2	2	2
Cap, veh/h	80	373	755	27	318	258	288	1767	9	124	1684	805
Arrive On Green	0.04	0.20	0.20	0.02	0.17	0.17	0.08	0.49	0.49	0.07	0.47	0.47
Sat Flow, veh/h	1781	1870	2615	1781	1870	1519	3456	3624	19	1781	3554	1549
Grp Volume(v), veh/h	23	44	286	6	32	18	198	565	593	54	1701	54
Grp Sat Flow(s),veh/h/ln	1781	1870	1307	1781	1870	1519	1728	1777	1866	1781	1777	1549
Q Serve(g_s), s	1.5	2.3	10.5	0.4	1.7	1.2	6.7	28.6	28.6	3.5	56.7	2.1
Cycle Q Clear(g_c), s	1.5	2.3	10.5	0.4	1.7	1.2	6.7	28.6	28.6	3.5	56.7	2.1
Prop In Lane	1.00		1.00	1.00		1.00	1.00		0.01	1.00		1.00
Lane Grp Cap(c), veh/h	80	373	755	27	318	258	288	866	910	124	1684	805
V/C Ratio(X)	0.29	0.12	0.38	0.22	0.10	0.07	0.69	0.65	0.65	0.44	1.01	0.07
Avail Cap(c_a), veh/h	149	719	1238	149	719	584	289	866	910	149	1684	805
HCM Platoon Ratio	1.00	1.00	1.00	1.00	1.00	1.00	1.00	1.00	1.00	1.00	1.00	1.00
Upstream Filter(I)	1.00	1.00	1.00	1.00	1.00	1.00	1.00	1.00	1.00	1.00	1.00	1.00
Uniform Delay (d), s/veh	55.3	39.3	34.5	58.2	41.9	41.7	53.3	23.0	23.0	53.4	31.5	14.4
Incr Delay (d2), s/veh	0.7	0.3	0.7	1.5	0.3	0.2	5.6	3.8	3.6	0.9	24.5	0.2
Initial Q Delay(d3),s/veh	0.0	0.0	0.0	0.0	0.0	0.0	0.0	0.0	0.0	0.0	0.0	0.0
%ile BackOfQ(50%),veh/ln	0.7	1.1	3.4	0.2	0.8	0.5	3.0	11.7	12.3	1.5	27.3	0.8
Unsig. Movement Delay, s/veh												
LnGrp Delay(d),s/veh	56.1	39.6	35.2	59.8	42.2	42.0	58.9	26.8	26.7	54.3	56.0	14.5
LnGrp LOS	E	D	D	E	D	D	E	C	C	D	F	B
Approach Vol, veh/h		353			56			1356			1809	
Approach Delay, s/veh		37.1			44.0			31.4			54.7	
Approach LOS		D			D			C			D	

Timer - Assigned Phs	1	2	3	4	5	6	7	8
Phs Duration (G+Y+Rc), s	14.0	66.7	7.5	31.4	15.7	65.1	11.0	27.9
Change Period (Y+Rc), s	* 5.7	* 8.4	* 5.7	7.5	* 5.7	* 8.4	* 5.7	7.5
Max Green Setting (Gmax), s	* 10	* 57	* 10	46.0	* 10	* 57	* 10	46.0
Max Q Clear Time (g_c+I1), s	5.5	30.6	2.4	12.5	8.7	58.7	3.5	3.7
Green Ext Time (p_c), s	0.0	19.3	0.0	3.2	0.0	0.0	0.0	0.4

Intersection Summary	
HCM 6th Ctrl Delay	44.0
HCM 6th LOS	D

Notes

* HCM 6th computational engine requires equal clearance times for the phases crossing the barrier.

Intersection	
Int Delay, s/veh	2.3

Movement	EBL	EBR	NBL	NBT	SBT	SBR
Lane Configurations						
Traffic Vol, veh/h	49	21	26	535	736	58
Future Vol, veh/h	49	21	26	535	736	58
Conflicting Peds, #/hr	10	10	10	0	0	10
Sign Control	Stop	Stop	Free	Free	Free	Free
RT Channelized	-	None	-	None	-	None
Storage Length	0	-	410	-	-	80
Veh in Median Storage, #	0	-	-	0	0	-
Grade, %	0	-	-	0	0	-
Peak Hour Factor	92	92	92	92	92	92
Heavy Vehicles, %	2	2	2	2	2	2
Mvmt Flow	53	23	28	582	800	63

Major/Minor	Minor2		Major1		Major2	
Conflicting Flow All	1458	820	873	0	-	0
Stage 1	810	-	-	-	-	-
Stage 2	648	-	-	-	-	-
Critical Hdwy	6.42	6.22	4.12	-	-	-
Critical Hdwy Stg 1	5.42	-	-	-	-	-
Critical Hdwy Stg 2	5.42	-	-	-	-	-
Follow-up Hdwy	3.518	3.318	2.218	-	-	-
Pot Cap-1 Maneuver	143	375	773	-	-	-
Stage 1	438	-	-	-	-	-
Stage 2	521	-	-	-	-	-
Platoon blocked, %				-	-	-
Mov Cap-1 Maneuver	135	368	766	-	-	-
Mov Cap-2 Maneuver	135	-	-	-	-	-
Stage 1	417	-	-	-	-	-
Stage 2	516	-	-	-	-	-

Approach	EB	NB	SB
HCM Control Delay, s	43.4	0.5	0
HCM LOS	E		

Minor Lane/Major Mvmt	NBL	NBT	EBLn1	SBT	SBR
Capacity (veh/h)	766	-	167	-	-
HCM Lane V/C Ratio	0.037	-	0.456	-	-
HCM Control Delay (s)	9.9	-	43.4	-	-
HCM Lane LOS	A	-	E	-	-
HCM 95th %tile Q(veh)	0.1	-	2.1	-	-

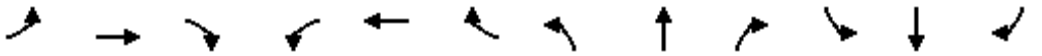

Movement	EBL	EBT	EBR	WBL	WBT	WBR	NBL	NBT	NBR	SBL	SBT	SBR
Lane Configurations												
Traffic Volume (veh/h)	99	35	41	53	42	105	51	275	22	150	327	115
Future Volume (veh/h)	99	35	41	53	42	105	51	275	22	150	327	115
Initial Q (Qb), veh	0	0	0	0	0	0	0	0	0	0	0	0
Ped-Bike Adj(A_pbT)	1.00		0.96	1.00		0.94	1.00		0.97	1.00		0.97
Parking Bus, Adj	1.00	1.00	1.00	1.00	1.00	1.00	1.00	1.00	1.00	1.00	1.00	1.00
Work Zone On Approach		No			No			No			No	
Adj Sat Flow, veh/h/ln	1870	1870	1870	1870	1870	1870	1870	1870	1870	1870	1870	1870
Adj Flow Rate, veh/h	134	47	55	79	63	157	60	324	26	158	344	121
Peak Hour Factor	0.74	0.74	0.74	0.67	0.67	0.67	0.85	0.85	0.85	0.95	0.95	0.95
Percent Heavy Veh, %	2	2	2	2	2	2	2	2	2	2	2	2
Cap, veh/h	260	410	335	220	369	293	210	448	36	243	723	249
Arrive On Green	0.15	0.22	0.22	0.12	0.20	0.20	0.12	0.26	0.26	0.14	0.28	0.28
Sat Flow, veh/h	1781	1870	1529	1781	1870	1485	1781	1704	137	1781	2569	886
Grp Volume(v), veh/h	134	47	55	79	63	157	60	0	350	158	236	229
Grp Sat Flow(s),veh/h/ln	1781	1870	1529	1781	1870	1485	1781	0	1841	1781	1777	1678
Q Serve(g_s), s	4.9	1.4	2.0	2.8	2.0	6.6	2.1	0.0	12.1	5.9	7.7	7.9
Cycle Q Clear(g_c), s	4.9	1.4	2.0	2.8	2.0	6.6	2.1	0.0	12.1	5.9	7.7	7.9
Prop In Lane	1.00		1.00	1.00		1.00	1.00		0.07	1.00		0.53
Lane Grp Cap(c), veh/h	260	410	335	220	369	293	210	0	484	243	500	472
V/C Ratio(X)	0.52	0.11	0.16	0.36	0.17	0.54	0.29	0.00	0.72	0.65	0.47	0.49
Avail Cap(c_a), veh/h	382	937	766	280	830	659	306	0	1001	459	1119	1057
HCM Platoon Ratio	1.00	1.00	1.00	1.00	1.00	1.00	1.00	1.00	1.00	1.00	1.00	1.00
Upstream Filter(I)	1.00	1.00	1.00	1.00	1.00	1.00	1.00	0.00	1.00	1.00	1.00	1.00
Uniform Delay (d), s/veh	27.6	21.8	22.1	28.1	23.3	25.2	28.1	0.0	23.4	28.6	20.8	20.9
Incr Delay (d2), s/veh	0.6	0.2	0.3	0.4	0.3	2.2	0.3	0.0	2.9	1.1	1.0	1.1
Initial Q Delay(d3),s/veh	0.0	0.0	0.0	0.0	0.0	0.0	0.0	0.0	0.0	0.0	0.0	0.0
%ile BackOfQ(50%),veh/ln	2.0	0.6	0.7	1.2	0.9	2.4	0.9	0.0	5.1	2.4	3.1	3.0
Unsig. Movement Delay, s/veh												
LnGrp Delay(d),s/veh	28.2	22.0	22.4	28.5	23.6	27.4	28.4	0.0	26.3	29.7	21.8	22.0
LnGrp LOS	C	C	C	C	C	C	C	A	C	C	C	C
Approach Vol, veh/h		236			299			410			623	
Approach Delay, s/veh		25.6			26.9			26.6			23.9	
Approach LOS		C			C			C			C	

Timer - Assigned Phs	1	2	3	4	5	6	7	8
Phs Duration (G+Y+Rc), s	13.5	24.4	12.6	19.3	12.3	25.7	14.2	17.8
Change Period (Y+Rc), s	4.0	6.0	4.0	4.0	4.0	6.0	4.0	4.0
Max Green Setting (Gmax), s	18.0	38.0	11.0	35.0	12.0	44.0	15.0	31.0
Max Q Clear Time (g_c+I1), s	7.9	14.1	4.8	4.0	4.1	9.9	6.9	8.6
Green Ext Time (p_c), s	0.1	2.9	0.0	0.6	0.0	4.3	0.1	1.3

Intersection Summary	
HCM 6th Ctrl Delay	25.4
HCM 6th LOS	C

Intersection	
Intersection Delay, s/veh	46.3
Intersection LOS	E

Movement	EBL	EBT	EBR	WBL	WBT	WBR	NBL	NBT	NBR	SBL	SBT	SBR
Lane Configurations												
Traffic Vol, veh/h	24	189	231	15	101	198	78	158	17	203	245	16
Future Vol, veh/h	24	189	231	15	101	198	78	158	17	203	245	16
Peak Hour Factor	0.83	0.83	0.83	0.90	0.90	0.90	0.89	0.89	0.89	0.91	0.91	0.91
Heavy Vehicles, %	2	2	2	2	2	2	2	2	2	2	2	2
Mvmt Flow	29	228	278	17	112	220	88	178	19	223	269	18
Number of Lanes	0	1	1	0	1	1	0	1	0	0	1	0

Approach	EB	WB	NB	SB
Opposing Approach	WB	EB	SB	NB
Opposing Lanes	2	2	1	1
Conflicting Approach Left	SB	NB	EB	WB
Conflicting Lanes Left	1	1	2	2
Conflicting Approach Right	NB	SB	WB	EB
Conflicting Lanes Right	1	1	2	2
HCM Control Delay	22.9	17.9	26.8	101.3
HCM LOS	C	C	D	F

Lane	NBLn1	EBLn1	EBLn2	WBLn1	WBLn2	SBLn1
Vol Left, %	31%	11%	0%	13%	0%	44%
Vol Thru, %	62%	89%	0%	87%	0%	53%
Vol Right, %	7%	0%	100%	0%	100%	3%
Sign Control	Stop	Stop	Stop	Stop	Stop	Stop
Traffic Vol by Lane	253	213	231	116	198	464
LT Vol	78	24	0	15	0	203
Through Vol	158	189	0	101	0	245
RT Vol	17	0	231	0	198	16
Lane Flow Rate	284	257	278	129	220	510
Geometry Grp	2	7	7	7	7	2
Degree of Util (X)	0.656	0.602	0.592	0.312	0.489	1.105
Departure Headway (Hd)	8.712	8.863	8.072	9.248	8.447	7.799
Convergence, Y/N	Yes	Yes	Yes	Yes	Yes	Yes
Cap	418	411	451	392	429	464
Service Time	6.712	6.563	5.772	6.948	6.147	5.846
HCM Lane V/C Ratio	0.679	0.625	0.616	0.329	0.513	1.099
HCM Control Delay	26.8	24.1	21.8	16.1	19	101.3
HCM Lane LOS	D	C	C	C	C	F
HCM 95th-tile Q	4.6	3.8	3.7	1.3	2.6	17.1

Intersection	
Intersection Delay, s/veh	5.0
Intersection LOS	A

Approach	EB	WB	NB	SB
Entry Lanes	1	1	1	1
Conflicting Circle Lanes	1	1	1	1
Adj Approach Flow, veh/h	402	300	16	24
Demand Flow Rate, veh/h	410	306	16	24
Vehicles Circulating, veh/h	22	18	400	315
Vehicles Exiting, veh/h	317	398	32	9
Ped Vol Crossing Leg, #/h	10	10	10	10
Ped Cap Adj	0.999	0.999	0.999	0.999
Approach Delay, s/veh	5.4	4.6	4.1	3.8
Approach LOS	A	A	A	A

Lane	Left	Left	Left	Left
Designated Moves	LTR	LTR	LTR	LTR
Assumed Moves	LTR	LTR	LTR	LTR
RT Channelized				
Lane Util	1.000	1.000	1.000	1.000
Follow-Up Headway, s	2.609	2.609	2.609	2.609
Critical Headway, s	4.976	4.976	4.976	4.976
Entry Flow, veh/h	410	306	16	24
Cap Entry Lane, veh/h	1349	1355	918	1001
Entry HV Adj Factor	0.981	0.981	0.995	0.993
Flow Entry, veh/h	402	300	16	24
Cap Entry, veh/h	1322	1327	912	993
V/C Ratio	0.304	0.226	0.017	0.024
Control Delay, s/veh	5.4	4.6	4.1	3.8
LOS	A	A	A	A
95th %tile Queue, veh	1	1	0	0

APPENDIX I

YEAR 2039 + PROJECT PHASES 1, 2 AND 3 (TM 994 BUILDOUT) INTERSECTION ANALYSIS WORKSHEETS

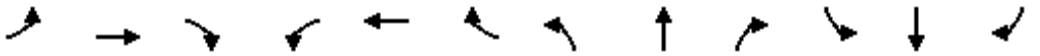

Movement	EBL	EBT	EBR	WBL	WBT	WBR	NBL	NBT	NBR	SBL	SBT	SBR
Lane Configurations												
Traffic Volume (veh/h)	112	239	208	98	248	91	137	833	88	111	585	104
Future Volume (veh/h)	112	239	208	98	248	91	137	833	88	111	585	104
Initial Q (Qb), veh	0	0	0	0	0	0	0	0	0	0	0	0
Ped-Bike Adj(A_pbT)	1.00		0.97	1.00		0.97	1.00		0.96	1.00		0.96
Parking Bus, Adj	1.00	1.00	1.00	1.00	1.00	1.00	1.00	1.00	1.00	1.00	1.00	1.00
Work Zone On Approach		No			No			No			No	
Adj Sat Flow, veh/h/ln	1870	1870	1870	1870	1870	1870	1870	1870	1870	1870	1870	1870
Adj Flow Rate, veh/h	158	337	293	153	388	142	176	1068	113	163	860	153
Peak Hour Factor	0.71	0.71	0.71	0.64	0.64	0.64	0.78	0.78	0.78	0.68	0.68	0.68
Percent Heavy Veh, %	2	2	2	2	2	2	2	2	2	2	2	2
Cap, veh/h	184	446	365	179	440	361	202	1208	128	181	1084	193
Arrive On Green	0.10	0.24	0.24	0.10	0.24	0.24	0.11	0.37	0.37	0.10	0.36	0.36
Sat Flow, veh/h	1781	1870	1532	1781	1870	1532	1781	3227	341	1781	2991	532
Grp Volume(v), veh/h	158	337	293	153	388	142	176	588	593	163	511	502
Grp Sat Flow(s),veh/h/ln	1781	1870	1532	1781	1870	1532	1781	1777	1791	1781	1777	1746
Q Serve(g_s), s	10.6	20.4	22.0	10.3	24.4	9.5	11.9	37.7	37.8	11.0	31.4	31.4
Cycle Q Clear(g_c), s	10.6	20.4	22.0	10.3	24.4	9.5	11.9	37.7	37.8	11.0	31.4	31.4
Prop In Lane	1.00		1.00	1.00		1.00	1.00		0.19	1.00		0.30
Lane Grp Cap(c), veh/h	184	446	365	179	440	361	202	665	670	181	644	633
V/C Ratio(X)	0.86	0.76	0.80	0.85	0.88	0.39	0.87	0.88	0.89	0.90	0.79	0.79
Avail Cap(c_a), veh/h	201	497	407	197	492	403	216	665	670	181	644	633
HCM Platoon Ratio	1.00	1.00	1.00	1.00	1.00	1.00	1.00	1.00	1.00	1.00	1.00	1.00
Upstream Filter(I)	1.00	1.00	1.00	0.42	0.42	0.42	0.46	0.46	0.46	1.00	1.00	1.00
Uniform Delay (d), s/veh	53.8	43.2	43.8	54.0	45.0	39.3	53.2	35.7	35.7	54.2	34.8	34.8
Incr Delay (d2), s/veh	25.5	4.9	8.9	12.3	6.9	0.1	14.5	8.2	8.2	39.2	9.7	9.9
Initial Q Delay(d3),s/veh	0.0	0.0	0.0	0.0	0.0	0.0	0.0	0.0	0.0	0.0	0.0	0.0
%ile BackOfQ(50%),veh/ln	6.0	9.9	9.1	5.2	12.0	3.6	6.1	17.6	17.8	6.9	15.2	14.9
Unsig. Movement Delay, s/veh												
LnGrp Delay(d),s/veh	79.3	48.1	52.6	66.3	51.9	39.4	67.7	43.8	43.9	93.3	44.5	44.7
LnGrp LOS	E	D	D	E	D	D	E	D	D	F	D	D
Approach Vol, veh/h		788			683			1357			1176	
Approach Delay, s/veh		56.0			52.5			47.0			51.3	
Approach LOS		E			D			D			D	

Timer - Assigned Phs	1	2	3	4	5	6	7	8
Phs Duration (G+Y+Rc), s	18.0	51.4	17.9	34.8	19.4	49.9	18.2	34.4
Change Period (Y+Rc), s	5.6	5.7	5.6	5.7	5.6	5.7	5.6	5.7
Max Green Setting (Gmax), s	12.4	41.1	13.5	32.4	14.8	38.7	13.8	32.1
Max Q Clear Time (g_c+I1), s	13.0	39.8	12.3	24.0	13.9	33.4	12.6	26.4
Green Ext Time (p_c), s	0.0	0.8	0.0	1.3	0.0	2.2	0.0	0.9

Intersection Summary	
HCM 6th Ctrl Delay	51.0
HCM 6th LOS	D



Movement	EBL	EBT	EBR	WBL	WBT	WBR	NBL	NBT	NBR	SBL	SBT	SBR
Lane Configurations												
Traffic Volume (veh/h)	81	266	95	21	278	28	158	656	28	75	423	94
Future Volume (veh/h)	81	266	95	21	278	28	158	656	28	75	423	94
Initial Q (Qb), veh	0	0	0	0	0	0	0	0	0	0	0	0
Ped-Bike Adj(A_pbT)	1.00		0.98	1.00		0.97	1.00		0.95	1.00		0.95
Parking Bus, Adj	1.00	1.00	1.00	1.00	1.00	1.00	1.00	1.00	1.00	1.00	1.00	1.00
Work Zone On Approach		No			No			No			No	
Adj Sat Flow, veh/h/ln	1870	1870	1870	1870	1870	1870	1870	1870	1870	1870	1870	1870
Adj Flow Rate, veh/h	119	391	140	30	397	40	211	875	37	112	631	140
Peak Hour Factor	0.68	0.68	0.68	0.70	0.70	0.70	0.75	0.75	0.75	0.67	0.67	0.67
Percent Heavy Veh, %	2	2	2	2	2	2	2	2	2	2	2	2
Cap, veh/h	187	582	208	62	464	45	250	1157	49	142	782	173
Arrive On Green	0.11	0.45	0.45	0.30	0.30	0.30	0.14	0.33	0.33	0.08	0.27	0.27
Sat Flow, veh/h	1781	1305	467	65	1548	151	1781	3466	147	1781	2860	633
Grp Volume(v), veh/h	119	0	531	467	0	0	211	449	463	112	392	379
Grp Sat Flow(s),veh/h/ln	1781	0	1773	1764	0	0	1781	1777	1836	1781	1777	1716
Q Serve(g_s), s	5.8	0.0	21.4	11.4	0.0	0.0	10.4	20.3	20.3	5.6	18.6	18.7
Cycle Q Clear(g_c), s	5.8	0.0	21.4	22.6	0.0	0.0	10.4	20.3	20.3	5.6	18.6	18.7
Prop In Lane	1.00		0.26	0.06		0.09	1.00		0.08	1.00		0.37
Lane Grp Cap(c), veh/h	187	0	791	571	0	0	250	593	613	142	486	469
V/C Ratio(X)	0.64	0.00	0.67	0.82	0.00	0.00	0.85	0.76	0.76	0.79	0.81	0.81
Avail Cap(c_a), veh/h	262	0	1088	787	0	0	361	768	794	250	658	636
HCM Platoon Ratio	1.00	1.00	1.00	1.00	1.00	1.00	1.00	1.00	1.00	1.00	1.00	1.00
Upstream Filter(I)	1.00	0.00	1.00	1.00	0.00	0.00	1.00	1.00	1.00	1.00	1.00	1.00
Uniform Delay (d), s/veh	38.8	0.0	19.8	29.9	0.0	0.0	37.9	26.8	26.8	40.8	30.6	30.6
Incr Delay (d2), s/veh	3.6	0.0	1.0	4.8	0.0	0.0	11.8	3.2	3.1	9.2	5.3	5.6
Initial Q Delay(d3),s/veh	0.0	0.0	0.0	0.0	0.0	0.0	0.0	0.0	0.0	0.0	0.0	0.0
%ile BackOfQ(50%),veh/ln	2.7	0.0	8.4	9.9	0.0	0.0	5.3	8.8	9.1	2.8	8.4	8.2
Unsig. Movement Delay, s/veh												
LnGrp Delay(d),s/veh	42.4	0.0	20.8	34.7	0.0	0.0	49.7	30.0	29.9	50.1	35.9	36.2
LnGrp LOS	D	A	C	C	A	A	D	C	C	D	D	D
Approach Vol, veh/h		650			467			1123			883	
Approach Delay, s/veh		24.8			34.7			33.7			37.8	
Approach LOS		C			C			C			D	

Timer - Assigned Phs	1	2		4	5	6	7	8
Phs Duration (G+Y+Rc), s	10.9	34.7		44.8	16.4	29.2	13.2	31.6
Change Period (Y+Rc), s	3.7	4.5		4.5	3.7	4.5	3.7	4.5
Max Green Setting (Gmax), s	12.3	39.1		55.5	18.3	33.5	13.3	38.5
Max Q Clear Time (g_c+I1), s	7.6	22.3		23.4	12.4	20.7	7.8	24.6
Green Ext Time (p_c), s	0.1	5.5		3.8	0.3	4.1	0.1	2.5

Intersection Summary	
HCM 6th Ctrl Delay	33.2
HCM 6th LOS	C



Movement	EBL	EBT	EBR	WBL	WBT	WBR	NBL	NBT	NBR	SBL	SBT	SBR
Lane Configurations												
Traffic Volume (veh/h)	45	198	80	95	141	206	56	680	113	121	522	16
Future Volume (veh/h)	45	198	80	95	141	206	56	680	113	121	522	16
Initial Q (Qb), veh	0	0	0	0	0	0	0	0	0	0	0	0
Ped-Bike Adj(A_pbT)	1.00		0.97	1.00		0.96	1.00		0.95	1.00		0.95
Parking Bus, Adj	1.00	1.00	1.00	1.00	1.00	1.00	1.00	1.00	1.00	1.00	1.00	1.00
Work Zone On Approach		No			No			No			No	
Adj Sat Flow, veh/h/ln	1870	1870	1870	1870	1870	1870	1870	1870	1870	1870	1870	1870
Adj Flow Rate, veh/h	58	254	103	116	172	251	64	773	128	146	629	19
Peak Hour Factor	0.78	0.78	0.78	0.82	0.82	0.82	0.88	0.88	0.88	0.83	0.83	0.83
Percent Heavy Veh, %	2	2	2	2	2	2	2	2	2	2	2	2
Cap, veh/h	63	275	112	150	222	310	82	829	137	170	1138	34
Arrive On Green	0.26	0.26	0.26	0.20	0.20	0.20	0.05	0.27	0.27	0.10	0.32	0.32
Sat Flow, veh/h	246	1079	437	738	1095	1526	1781	3025	501	1781	3516	106
Grp Volume(v), veh/h	415	0	0	288	0	251	64	454	447	146	318	330
Grp Sat Flow(s),veh/h/ln	1762	0	0	1833	0	1526	1781	1777	1748	1781	1777	1845
Q Serve(g_s), s	31.0	0.0	0.0	20.1	0.0	21.2	4.8	33.7	33.7	10.9	19.9	19.9
Cycle Q Clear(g_c), s	31.0	0.0	0.0	20.1	0.0	21.2	4.8	33.7	33.7	10.9	19.9	19.9
Prop In Lane	0.14		0.25	0.40		1.00	1.00		0.29	1.00		0.06
Lane Grp Cap(c), veh/h	450	0	0	372	0	310	82	487	479	170	575	597
V/C Ratio(X)	0.92	0.00	0.00	0.77	0.00	0.81	0.78	0.93	0.93	0.86	0.55	0.55
Avail Cap(c_a), veh/h	483	0	0	502	0	418	117	492	484	202	576	598
HCM Platoon Ratio	1.00	1.00	1.00	1.00	1.00	1.00	1.00	1.00	1.00	1.00	1.00	1.00
Upstream Filter(I)	1.00	0.00	0.00	1.00	0.00	1.00	1.00	1.00	1.00	1.00	1.00	1.00
Uniform Delay (d), s/veh	49.0	0.0	0.0	50.9	0.0	51.4	63.8	47.8	47.8	60.2	37.6	37.6
Incr Delay (d2), s/veh	22.7	0.0	0.0	5.2	0.0	8.5	11.7	26.4	26.7	23.2	3.1	3.0
Initial Q Delay(d3),s/veh	0.0	0.0	0.0	0.0	0.0	0.0	0.0	0.0	0.0	0.0	0.0	0.0
%ile BackOfQ(50%),veh/ln	16.3	0.0	0.0	9.7	0.0	8.8	2.4	18.1	17.9	6.0	9.0	9.4
Unsig. Movement Delay, s/veh												
LnGrp Delay(d),s/veh	71.7	0.0	0.0	56.1	0.0	59.8	75.4	74.2	74.6	83.4	40.7	40.6
LnGrp LOS	E	A	A	E	A	E	E	E	E	F	D	D
Approach Vol, veh/h		415			539			965			794	
Approach Delay, s/veh		71.7			57.9			74.5			48.5	
Approach LOS		E			E			E			D	

Timer - Assigned Phs	1	2		4	5	6		8
Phs Duration (G+Y+Rc), s	11.9	49.1		33.5	18.6	42.4		40.6
Change Period (Y+Rc), s	* 5.7	5.4		6.1	* 5.7	5.4		6.1
Max Green Setting (Gmax), s	* 8.3	43.8		37.0	* 15	37.4		37.0
Max Q Clear Time (g_c+I1), s	10.8	21.9		23.2	12.9	35.7		33.0
Green Ext Time (p_c), s	0.0	8.7		2.2	0.0	1.3		0.9

Intersection Summary	
HCM 6th Ctrl Delay	63.1
HCM 6th LOS	E

Notes

* HCM 6th computational engine requires equal clearance times for the phases crossing the barrier.



Movement	EBL	EBT	EBR	WBL	WBT	WBR	NBL	NBT	NBR	SBL	SBT	SBR
Lane Configurations												
Traffic Volume (veh/h)	65	92	104	46	144	58	142	498	87	28	388	61
Future Volume (veh/h)	65	92	104	46	144	58	142	498	87	28	388	61
Initial Q (Qb), veh	0	0	0	0	0	0	0	0	0	0	0	0
Ped-Bike Adj(A_pbT)	1.00		0.91	1.00		0.94	1.00		0.96	1.00		0.95
Parking Bus, Adj	1.00	1.00	1.00	1.00	1.00	1.00	1.00	1.00	1.00	1.00	1.00	1.00
Work Zone On Approach		No			No			No			No	
Adj Sat Flow, veh/h/ln	1870	1870	1870	1870	1870	1870	1870	1870	1870	1870	1870	1870
Adj Flow Rate, veh/h	75	106	120	55	173	70	167	586	102	36	504	79
Peak Hour Factor	0.87	0.87	0.87	0.83	0.83	0.83	0.85	0.85	0.85	0.77	0.77	0.77
Percent Heavy Veh, %	2	2	2	2	2	2	2	2	2	2	2	2
Cap, veh/h	92	130	175	65	205	83	199	627	109	57	612	495
Arrive On Green	0.12	0.12	0.12	0.20	0.20	0.20	0.11	0.41	0.41	0.03	0.33	0.33
Sat Flow, veh/h	759	1073	1443	323	1015	411	1781	1540	268	1781	1870	1512
Grp Volume(v), veh/h	181	0	120	298	0	0	167	0	688	36	504	79
Grp Sat Flow(s),veh/h/ln	1832	0	1443	1748	0	0	1781	0	1809	1781	1870	1512
Q Serve(g_s), s	9.4	0.0	7.8	16.0	0.0	0.0	8.9	0.0	35.5	1.9	24.2	3.6
Cycle Q Clear(g_c), s	9.4	0.0	7.8	16.0	0.0	0.0	8.9	0.0	35.5	1.9	24.2	3.6
Prop In Lane	0.41		1.00	0.18		0.23	1.00		0.15	1.00		1.00
Lane Grp Cap(c), veh/h	222	0	175	352	0	0	199	0	736	57	612	495
V/C Ratio(X)	0.81	0.00	0.69	0.85	0.00	0.00	0.84	0.00	0.94	0.63	0.82	0.16
Avail Cap(c_a), veh/h	322	0	253	469	0	0	263	0	895	99	753	609
HCM Platoon Ratio	1.00	1.00	1.00	1.00	1.00	1.00	1.00	1.00	1.00	1.00	1.00	1.00
Upstream Filter(I)	1.00	0.00	1.00	1.00	0.00	0.00	1.00	0.00	1.00	1.00	1.00	1.00
Uniform Delay (d), s/veh	41.7	0.0	41.0	37.4	0.0	0.0	42.4	0.0	27.6	46.6	30.1	23.2
Incr Delay (d2), s/veh	6.4	0.0	1.8	8.3	0.0	0.0	13.2	0.0	13.7	4.2	5.0	0.1
Initial Q Delay(d3),s/veh	0.0	0.0	0.0	0.0	0.0	0.0	0.0	0.0	0.0	0.0	0.0	0.0
%ile BackOfQ(50%),veh/ln	4.5	0.0	2.8	7.4	0.0	0.0	4.5	0.0	16.7	0.9	10.9	1.2
Unsig. Movement Delay, s/veh												
LnGrp Delay(d),s/veh	48.1	0.0	42.8	45.7	0.0	0.0	55.6	0.0	41.4	50.8	35.2	23.3
LnGrp LOS	D	A	D	D	A	A	E	A	D	D	D	C
Approach Vol, veh/h		301			298			855			619	
Approach Delay, s/veh		46.0			45.7			44.2			34.6	
Approach LOS		D			D			D			C	

Timer - Assigned Phs	1	2		4	5	6		8
Phs Duration (G+Y+Rc), s	8.7	45.4		17.7	16.5	37.7		25.5
Change Period (Y+Rc), s	5.6	5.8		5.9	5.6	5.8		5.9
Max Green Setting (Gmax), s	5.4	48.2		17.1	14.4	39.2		26.1
Max Q Clear Time (g_c+I1), s	3.9	37.5		11.4	10.9	26.2		18.0
Green Ext Time (p_c), s	0.0	2.2		0.4	0.0	1.6		0.7

Intersection Summary		
HCM 6th Ctrl Delay		41.8
HCM 6th LOS		D

Intersection	
Intersection Delay, s/veh	129.5
Intersection LOS	F

Movement	EBL	EBT	EBR	WBL	WBT	WBR	NBL	NBT	NBR	SBL	SBT	SBR
Lane Configurations												
Traffic Vol, veh/h	58	166	88	47	124	112	116	636	70	95	392	33
Future Vol, veh/h	58	166	88	47	124	112	116	636	70	95	392	33
Peak Hour Factor	0.73	0.73	0.73	0.74	0.74	0.74	0.78	0.78	0.78	0.66	0.66	0.66
Heavy Vehicles, %	2	2	2	2	2	2	2	2	2	2	2	2
Mvmt Flow	79	227	121	64	168	151	149	815	90	144	594	50
Number of Lanes	0	1	0	0	1	0	1	2	0	1	2	0

Approach	EB	WB	NB	SB
Opposing Approach	WB	EB	SB	NB
Opposing Lanes	1	1	3	3
Conflicting Approach Left	SB	NB	EB	WB
Conflicting Lanes Left	3	3	1	1
Conflicting Approach Right	NB	SB	WB	EB
Conflicting Lanes Right	3	3	1	1
HCM Control Delay	170.6	121	162.2	67.7
HCM LOS	F	F	F	F

Lane	NBLn1	NBLn2	NBLn3	EBLn1	WBLn1	SBLn1	SBLn2	SBLn3
Vol Left, %	100%	0%	0%	19%	17%	100%	0%	0%
Vol Thru, %	0%	100%	75%	53%	44%	0%	100%	80%
Vol Right, %	0%	0%	25%	28%	40%	0%	0%	20%
Sign Control	Stop	Stop	Stop	Stop	Stop	Stop	Stop	Stop
Traffic Vol by Lane	116	424	282	312	283	95	261	164
LT Vol	116	0	0	58	47	95	0	0
Through Vol	0	424	212	166	124	0	261	131
RT Vol	0	0	70	88	112	0	0	33
Lane Flow Rate	149	544	362	427	382	144	396	248
Geometry Grp	7	7	7	7	7	7	7	7
Degree of Util (X)	0.425	1.479	0.967	1.255	1.114	0.413	1.081	0.667
Departure Headway (Hd)	11.418	10.877	10.689	11.535	11.751	11.351	10.81	10.657
Convergence, Y/N	Yes	Yes	Yes	Yes	Yes	Yes	Yes	Yes
Cap	318	337	343	321	314	320	341	342
Service Time	9.118	8.577	8.389	9.235	9.451	9.051	8.51	8.357
HCM Lane V/C Ratio	0.469	1.614	1.055	1.33	1.217	0.45	1.161	0.725
HCM Control Delay	22.3	258.7	74.6	170.6	121	21.8	106.5	32.3
HCM Lane LOS	C	F	F	F	F	C	F	D
HCM 95th-tile Q	2	26.7	10.4	18.1	13.7	1.9	13.4	4.5



Movement	EBL	EBT	EBR	WBL	WBT	WBR	NBL	NBT	NBR	SBL	SBT	SBR
Lane Configurations												
Traffic Volume (veh/h)	111	85	167	64	88	21	91	714	30	13	593	36
Future Volume (veh/h)	111	85	167	64	88	21	91	714	30	13	593	36
Initial Q (Qb), veh	0	0	0	0	0	0	0	0	0	0	0	0
Ped-Bike Adj(A_pbT)	1.00		0.96	1.00		0.96	1.00		0.96	1.00		0.95
Parking Bus, Adj	1.00	1.00	1.00	1.00	1.00	1.00	1.00	1.00	1.00	1.00	1.00	1.00
Work Zone On Approach		No			No			No			No	
Adj Sat Flow, veh/h/ln	1870	1870	1870	1870	1870	1870	1870	1870	1870	1870	1870	1870
Adj Flow Rate, veh/h	135	104	204	100	138	33	108	850	36	16	714	43
Peak Hour Factor	0.82	0.82	0.82	0.64	0.64	0.64	0.84	0.84	0.84	0.83	0.83	0.83
Percent Heavy Veh, %	2	2	2	2	2	2	2	2	2	2	2	2
Cap, veh/h	178	137	263	130	180	43	138	1264	54	53	1076	65
Arrive On Green	0.17	0.17	0.17	0.20	0.20	0.20	0.08	0.36	0.36	0.03	0.32	0.32
Sat Flow, veh/h	1027	792	1519	660	911	218	1781	3466	147	1781	3394	204
Grp Volume(v), veh/h	239	0	204	271	0	0	108	436	450	16	374	383
Grp Sat Flow(s),veh/h/ln	1819	0	1519	1788	0	0	1781	1777	1836	1781	1777	1822
Q Serve(g_s), s	10.4	0.0	10.7	11.9	0.0	0.0	4.9	17.1	17.2	0.7	15.1	15.1
Cycle Q Clear(g_c), s	10.4	0.0	10.7	11.9	0.0	0.0	4.9	17.1	17.2	0.7	15.1	15.1
Prop In Lane	0.56		1.00	0.37		0.12	1.00		0.08	1.00		0.11
Lane Grp Cap(c), veh/h	315	0	263	353	0	0	138	648	670	53	564	578
V/C Ratio(X)	0.76	0.00	0.77	0.77	0.00	0.00	0.78	0.67	0.67	0.30	0.66	0.66
Avail Cap(c_a), veh/h	554	0	463	609	0	0	264	826	853	178	740	759
HCM Platoon Ratio	1.00	1.00	1.00	1.00	1.00	1.00	1.00	1.00	1.00	1.00	1.00	1.00
Upstream Filter(I)	1.00	0.00	1.00	1.00	0.00	0.00	1.00	1.00	1.00	1.00	1.00	1.00
Uniform Delay (d), s/veh	32.7	0.0	32.8	31.5	0.0	0.0	37.7	22.2	22.2	39.5	24.5	24.5
Incr Delay (d2), s/veh	3.7	0.0	4.8	3.5	0.0	0.0	3.7	4.4	4.3	1.2	4.8	4.7
Initial Q Delay(d3),s/veh	0.0	0.0	0.0	0.0	0.0	0.0	0.0	0.0	0.0	0.0	0.0	0.0
%ile BackOfQ(50%),veh/ln	4.8	0.0	4.2	5.3	0.0	0.0	2.2	7.3	7.5	0.3	6.6	6.8
Unsig. Movement Delay, s/veh												
LnGrp Delay(d),s/veh	36.4	0.0	37.6	35.0	0.0	0.0	41.3	26.6	26.5	40.6	29.3	29.2
LnGrp LOS	D	A	D	D	A	A	D	C	C	D	C	C
Approach Vol, veh/h		443			271			994			773	
Approach Delay, s/veh		37.0			35.0			28.2			29.5	
Approach LOS		D			D			C			C	

Timer - Assigned Phs	1	2		4	5	6		8
Phs Duration (G+Y+Rc), s	11.1	31.7		21.1	7.2	35.7		19.1
Change Period (Y+Rc), s	* 4.7	5.4		* 4.7	* 4.7	5.4		4.7
Max Green Setting (Gmax), s	* 12	34.6		* 28	* 8.3	38.6		25.3
Max Q Clear Time (g_c+I1), s	6.9	17.1		13.9	2.7	19.2		12.7
Green Ext Time (p_c), s	0.1	8.9		1.3	0.0	11.1		1.8

Intersection Summary	
HCM 6th Ctrl Delay	30.9
HCM 6th LOS	C

Notes

* HCM 6th computational engine requires equal clearance times for the phases crossing the barrier.



Movement	EBL	EBT	EBR	WBL	WBT	WBR	NBL	NBT	NBR	SBL	SBT	SBR
Lane Configurations												
Traffic Volume (veh/h)	178	130	349	48	121	60	259	823	50	32	523	102
Future Volume (veh/h)	178	130	349	48	121	60	259	823	50	32	523	102
Initial Q (Qb), veh	0	0	0	0	0	0	0	0	0	0	0	0
Ped-Bike Adj(A_pbT)	1.00		0.98	0.99		0.97	1.00		0.96	1.00		0.97
Parking Bus, Adj	1.00	1.00	1.00	1.00	1.00	1.00	1.00	1.00	1.00	1.00	1.00	1.00
Work Zone On Approach		No			No			No			No	
Adj Sat Flow, veh/h/ln	1870	1870	1870	1870	1870	1870	1870	1870	1870	1870	1870	1870
Adj Flow Rate, veh/h	247	181	485	56	142	71	345	1097	67	44	726	142
Peak Hour Factor	0.72	0.72	0.72	0.85	0.85	0.85	0.75	0.75	0.75	0.72	0.72	0.72
Percent Heavy Veh, %	2	2	2	2	2	2	2	2	2	2	2	2
Cap, veh/h	234	758	626	89	191	86	324	1376	84	59	756	148
Arrive On Green	0.13	0.41	0.41	0.22	0.22	0.22	0.18	0.41	0.41	0.03	0.26	0.26
Sat Flow, veh/h	1781	1870	1546	225	850	385	1781	3392	207	1781	2945	576
Grp Volume(v), veh/h	247	181	485	269	0	0	345	574	590	44	438	430
Grp Sat Flow(s),veh/h/ln	1781	1870	1546	1461	0	0	1781	1777	1823	1781	1777	1744
Q Serve(g_s), s	14.7	7.1	30.5	13.8	0.0	0.0	20.4	31.8	31.9	2.7	27.3	27.3
Cycle Q Clear(g_c), s	14.7	7.1	30.5	19.2	0.0	0.0	20.4	31.8	31.9	2.7	27.3	27.3
Prop In Lane	1.00		1.00	0.21		0.26	1.00		0.11	1.00		0.33
Lane Grp Cap(c), veh/h	234	758	626	366	0	0	324	720	739	59	456	448
V/C Ratio(X)	1.06	0.24	0.77	0.73	0.00	0.00	1.06	0.80	0.80	0.74	0.96	0.96
Avail Cap(c_a), veh/h	234	889	735	463	0	0	324	720	739	81	456	448
HCM Platoon Ratio	1.00	1.00	1.00	1.00	1.00	1.00	1.00	1.00	1.00	1.00	1.00	1.00
Upstream Filter(I)	1.00	1.00	1.00	1.00	0.00	0.00	1.00	1.00	1.00	1.00	1.00	1.00
Uniform Delay (d), s/veh	48.7	22.0	28.9	40.7	0.0	0.0	45.9	29.3	29.3	53.7	41.1	41.1
Incr Delay (d2), s/veh	75.0	0.1	3.6	3.1	0.0	0.0	68.1	6.6	6.5	12.6	32.0	32.5
Initial Q Delay(d3),s/veh	0.0	0.0	0.0	0.0	0.0	0.0	0.0	0.0	0.0	0.0	0.0	0.0
%ile BackOfQ(50%),veh/ln	11.4	3.1	11.7	7.3	0.0	0.0	15.1	14.6	15.0	1.4	15.8	15.6
Unsig. Movement Delay, s/veh												
LnGrp Delay(d),s/veh	123.7	22.0	32.5	43.8	0.0	0.0	114.0	35.9	35.8	66.3	73.1	73.6
LnGrp LOS	F	C	C	D	A	A	F	D	D	E	E	E
Approach Vol, veh/h		913			269			1509			912	
Approach Delay, s/veh		55.1			43.8			53.7			73.0	
Approach LOS		E			D			D			E	

Timer - Assigned Phs	1	2		4	5	6	7	8
Phs Duration (G+Y+Rc), s	9.3	51.2		51.6	26.0	34.5	20.3	31.3
Change Period (Y+Rc), s	5.6	5.7		6.2	5.6	5.7	5.6	6.2
Max Green Setting (Gmax), s	5.1	44.1		53.3	20.4	28.8	14.7	33.0
Max Q Clear Time (g_c+I1), s	4.7	33.9		32.5	22.4	29.3	16.7	21.2
Green Ext Time (p_c), s	0.0	6.7		1.6	0.0	0.0	0.0	1.0

Intersection Summary		
HCM 6th Ctrl Delay		58.2
HCM 6th LOS		E



Movement	EBL	EBT	EBR	WBL	WBT	WBR	NBL	NBT	NBR	SBL	SBT	SBR
Lane Configurations												
Traffic Volume (veh/h)	0	0	0	248	1	335	239	679	0	0	837	105
Future Volume (veh/h)	0	0	0	248	1	335	239	679	0	0	837	105
Initial Q (Qb), veh				0	0	0	0	0	0	0	0	0
Ped-Bike Adj(A_pbT)				1.00		0.97	1.00		1.00	1.00		0.96
Parking Bus, Adj				1.00	1.00	1.00	1.00	1.00	1.00	1.00	1.00	1.00
Work Zone On Approach					No			No			No	
Adj Sat Flow, veh/h/ln				1870	1870	1870	1870	1870	0	0	1870	1870
Adj Flow Rate, veh/h				318	1	429	254	722	0	0	973	122
Peak Hour Factor				0.78	0.78	0.78	0.94	0.94	0.94	0.86	0.86	0.86
Percent Heavy Veh, %				2	2	2	2	2	0	0	2	2
Cap, veh/h				580	2	503	287	2009	0	0	1124	141
Arrive On Green				0.33	0.33	0.33	0.16	0.57	0.00	0.00	0.36	0.36
Sat Flow, veh/h				1776	6	1541	1781	3647	0	0	3252	396
Grp Volume(v), veh/h				319	0	429	254	722	0	0	547	548
Grp Sat Flow(s),veh/h/ln				1782	0	1541	1781	1777	0	0	1777	1778
Q Serve(g_s), s				14.3	0.0	25.3	13.6	10.8	0.0	0.0	27.9	27.9
Cycle Q Clear(g_c), s				14.3	0.0	25.3	13.6	10.8	0.0	0.0	27.9	27.9
Prop In Lane				1.00		1.00	1.00		0.00	0.00		0.22
Lane Grp Cap(c), veh/h				582	0	503	287	2009	0	0	632	632
V/C Ratio(X)				0.55	0.00	0.85	0.88	0.36	0.00	0.00	0.87	0.87
Avail Cap(c_a), veh/h				914	0	791	354	2178	0	0	651	651
HCM Platoon Ratio				1.00	1.00	1.00	1.00	1.00	1.00	1.00	1.00	1.00
Upstream Filter(I)				1.00	0.00	1.00	1.00	1.00	0.00	0.00	1.00	1.00
Uniform Delay (d), s/veh				26.8	0.0	30.5	39.9	11.5	0.0	0.0	29.2	29.2
Incr Delay (d2), s/veh				0.8	0.0	5.4	17.3	0.4	0.0	0.0	13.9	14.0
Initial Q Delay(d3),s/veh				0.0	0.0	0.0	0.0	0.0	0.0	0.0	0.0	0.0
%ile BackOfQ(50%),veh/ln				6.1	0.0	9.8	7.1	3.9	0.0	0.0	13.6	13.6
Unsig. Movement Delay, s/veh												
LnGrp Delay(d),s/veh				27.7	0.0	35.9	57.2	11.9	0.0	0.0	43.1	43.1
LnGrp LOS				C	A	D	E	B	A	A	D	D
Approach Vol, veh/h					748			976			1095	
Approach Delay, s/veh					32.4			23.7			43.1	
Approach LOS					C			C			D	

Timer - Assigned Phs	1	2		4		6						
Phs Duration (G+Y+Rc), s	20.4	40.0		36.9		60.4						
Change Period (Y+Rc), s	* 4.7	5.4		5.1		5.4						
Max Green Setting (Gmax), s	* 13	35.6		49.9		59.6						
Max Q Clear Time (g_c+I1), s	15.6	29.9		27.3		12.8						
Green Ext Time (p_c), s	0.1	4.7		3.7		14.5						

Intersection Summary	
HCM 6th Ctrl Delay	33.5
HCM 6th LOS	C

Notes

* HCM 6th computational engine requires equal clearance times for the phases crossing the barrier.



Movement	EBL	EBT	EBR	WBL	WBT	WBR	NBL	NBT	NBR	SBL	SBT	SBR
Lane Configurations												
Traffic Volume (veh/h)	81	1	275	0	0	0	0	837	197	259	826	0
Future Volume (veh/h)	81	1	275	0	0	0	0	837	197	259	826	0
Initial Q (Qb), veh	0	0	0				0	0	0	0	0	0
Ped-Bike Adj(A_pbT)	1.00		0.97				1.00		0.95	1.00		1.00
Parking Bus, Adj	1.00	1.00	1.00				1.00	1.00	1.00	1.00	1.00	1.00
Work Zone On Approach		No						No			No	
Adj Sat Flow, veh/h/ln	1870	1870	1870				0	1870	1870	1870	1870	0
Adj Flow Rate, veh/h	135	2	391				0	940	221	298	949	0
Peak Hour Factor	0.60	0.60	0.60				0.89	0.89	0.89	0.87	0.87	0.87
Percent Heavy Veh, %	2	2	2				0	2	2	2	2	0
Cap, veh/h	148	2	427				0	1078	458	332	1904	0
Arrive On Green	0.36	0.36	0.36				0.00	0.30	0.30	0.19	0.54	0.00
Sat Flow, veh/h	409	6	1184				0	3647	1509	1781	3647	0
Grp Volume(v), veh/h	528	0	0				0	940	221	298	949	0
Grp Sat Flow(s),veh/h/ln	1599	0	0				0	1777	1509	1781	1777	0
Q Serve(g_s), s	32.1	0.0	0.0				0.0	25.5	12.2	16.6	17.2	0.0
Cycle Q Clear(g_c), s	32.1	0.0	0.0				0.0	25.5	12.2	16.6	17.2	0.0
Prop In Lane	0.26		0.74				0.00		1.00	1.00		0.00
Lane Grp Cap(c), veh/h	577	0	0				0	1078	458	332	1904	0
V/C Ratio(X)	0.91	0.00	0.00				0.00	0.87	0.48	0.90	0.50	0.00
Avail Cap(c_a), veh/h	691	0	0				0	1100	467	513	2287	0
HCM Platoon Ratio	1.00	1.00	1.00				1.00	1.00	1.00	1.00	1.00	1.00
Upstream Filter(I)	1.00	0.00	0.00				0.00	1.00	1.00	1.00	1.00	0.00
Uniform Delay (d), s/veh	31.0	0.0	0.0				0.0	33.6	28.9	40.5	15.0	0.0
Incr Delay (d2), s/veh	15.1	0.0	0.0				0.0	9.2	2.9	9.2	0.7	0.0
Initial Q Delay(d3),s/veh	0.0	0.0	0.0				0.0	0.0	0.0	0.0	0.0	0.0
%ile BackOfQ(50%),veh/ln	14.4	0.0	0.0				0.0	11.8	4.6	7.9	6.5	0.0
Unsig. Movement Delay, s/veh												
LnGrp Delay(d),s/veh	46.1	0.0	0.0				0.0	42.8	31.8	49.6	15.7	0.0
LnGrp LOS	D	A	A				A	D	C	D	B	A
Approach Vol, veh/h		528						1161			1247	
Approach Delay, s/veh		46.1						40.7			23.8	
Approach LOS		D						D			C	

Timer - Assigned Phs		2			5	6		8				
Phs Duration (G+Y+Rc), s		59.9			23.7	36.3		41.8				
Change Period (Y+Rc), s		5.4			* 4.7	5.4		5.1				
Max Green Setting (Gmax), s		65.5			* 29	31.5		44.0				
Max Q Clear Time (g_c+I1), s		19.2			18.6	27.5		34.1				
Green Ext Time (p_c), s		20.6			0.3	3.4		2.7				

Intersection Summary												
HCM 6th Ctrl Delay			34.5									
HCM 6th LOS			C									

Notes

* HCM 6th computational engine requires equal clearance times for the phases crossing the barrier.



Movement	EBL	EBT	EBR	WBL	WBT	WBR	NBL	NBT	NBR	SBL	SBT	SBR
Lane Configurations												
Traffic Volume (veh/h)	0	0	0	113	2	136	0	608	200	0	441	91
Future Volume (veh/h)	0	0	0	113	2	136	0	608	200	0	441	91
Initial Q (Qb), veh				0	0	0	0	0	0	0	0	0
Ped-Bike Adj(A_pbT)				1.00		0.97	1.00		0.96	1.00		0.96
Parking Bus, Adj				1.00	1.00	1.00	1.00	1.00	1.00	1.00	1.00	1.00
Work Zone On Approach					No			No			No	
Adj Sat Flow, veh/h/ln				1870	1870	1870	0	1870	1870	0	1870	1870
Adj Flow Rate, veh/h				153	3	184	0	707	233	0	531	110
Peak Hour Factor				0.74	0.74	0.74	0.86	0.86	0.86	0.83	0.83	0.83
Percent Heavy Veh, %				2	2	2	0	2	2	0	2	2
Cap, veh/h				407	8	356	0	1527	654	0	1816	366
Arrive On Green				0.23	0.23	0.23	0.00	0.43	0.43	0.00	0.43	0.43
Sat Flow, veh/h				1749	34	1531	0	3647	1522	0	4395	852
Grp Volume(v), veh/h				156	0	184	0	707	233	0	425	216
Grp Sat Flow(s),veh/h/ln				1783	0	1531	0	1777	1522	0	1702	1675
Q Serve(g_s), s				2.7	0.0	3.9	0.0	5.2	3.8	0.0	3.0	3.1
Cycle Q Clear(g_c), s				2.7	0.0	3.9	0.0	5.2	3.8	0.0	3.0	3.1
Prop In Lane				0.98		1.00	0.00		1.00	0.00		0.51
Lane Grp Cap(c), veh/h				415	0	356	0	1527	654	0	1463	720
V/C Ratio(X)				0.38	0.00	0.52	0.00	0.46	0.36	0.00	0.29	0.30
Avail Cap(c_a), veh/h				2306	0	1981	0	5720	2449	0	5479	2696
HCM Platoon Ratio				1.00	1.00	1.00	1.00	1.00	1.00	1.00	1.00	1.00
Upstream Filter(I)				1.00	0.00	1.00	0.00	1.00	1.00	0.00	1.00	1.00
Uniform Delay (d), s/veh				11.9	0.0	12.4	0.0	7.5	7.1	0.0	6.9	6.9
Incr Delay (d2), s/veh				0.6	0.0	1.2	0.0	0.2	0.3	0.0	0.1	0.2
Initial Q Delay(d3),s/veh				0.0	0.0	0.0	0.0	0.0	0.0	0.0	0.0	0.0
%ile BackOfQ(50%),veh/ln				0.9	0.0	1.2	0.0	1.2	0.8	0.0	0.6	0.7
Unsig. Movement Delay, s/veh												
LnGrp Delay(d),s/veh				12.5	0.0	13.5	0.0	7.7	7.4	0.0	7.0	7.1
LnGrp LOS				B	A	B	A	A	A	A	A	A
Approach Vol, veh/h					340			940			641	
Approach Delay, s/veh					13.1			7.7			7.0	
Approach LOS					B			A			A	

Timer - Assigned Phs	2		6		8			
Phs Duration (G+Y+Rc), s	22.3		22.3		14.7			
Change Period (Y+Rc), s	6.4		6.4		6.1			
Max Green Setting (Gmax), s	59.6		59.6		47.9			
Max Q Clear Time (g_c+I1), s	7.2		5.1		5.9			
Green Ext Time (p_c), s	6.3		4.4		1.7			

Intersection Summary								
HCM 6th Ctrl Delay	8.4							
HCM 6th LOS	A							



Movement	EBL	EBT	EBR	WBL	WBT	WBR	NBL	NBT	NBR	SBL	SBT	SBR
Lane Configurations												
Traffic Volume (veh/h)	92	2	199	0	0	0	0	717	84	77	475	0
Future Volume (veh/h)	92	2	199	0	0	0	0	717	84	77	475	0
Initial Q (Qb), veh	0	0	0				0	0	0	0	0	0
Ped-Bike Adj(A_pbT)	1.00		0.93				1.00		0.96	1.00		1.00
Parking Bus, Adj	1.00	1.00	1.00				1.00	1.00	1.00	1.00	1.00	1.00
Work Zone On Approach		No						No			No	
Adj Sat Flow, veh/h/ln	1870	1870	1870				0	1870	1870	1870	1870	0
Adj Flow Rate, veh/h	111	2	240				0	834	98	105	651	0
Peak Hour Factor	0.83	0.83	0.83				0.86	0.86	0.86	0.73	0.73	0.73
Percent Heavy Veh, %	2	2	2				0	2	2	2	2	0
Cap, veh/h	330	6	492				0	1345	574	139	2017	0
Arrive On Green	0.19	0.19	0.19				0.00	0.38	0.38	0.08	0.57	0.00
Sat Flow, veh/h	1751	32	2608				0	3647	1518	1781	3647	0
Grp Volume(v), veh/h	113	0	240				0	834	98	105	651	0
Grp Sat Flow(s),veh/h/ln	1783	0	1304				0	1777	1518	1781	1777	0
Q Serve(g_s), s	2.8	0.0	4.2				0.0	9.8	2.2	3.0	5.0	0.0
Cycle Q Clear(g_c), s	2.8	0.0	4.2				0.0	9.8	2.2	3.0	5.0	0.0
Prop In Lane	0.98		1.00				0.00		1.00	1.00		0.00
Lane Grp Cap(c), veh/h	336	0	492				0	1345	574	139	2017	0
V/C Ratio(X)	0.34	0.00	0.49				0.00	0.62	0.17	0.76	0.32	0.00
Avail Cap(c_a), veh/h	1317	0	1927				0	3020	1290	705	4821	0
HCM Platoon Ratio	1.00	1.00	1.00				1.00	1.00	1.00	1.00	1.00	1.00
Upstream Filter(I)	1.00	0.00	1.00				0.00	1.00	1.00	1.00	1.00	0.00
Uniform Delay (d), s/veh	18.0	0.0	18.6				0.0	12.9	10.6	23.2	5.9	0.0
Incr Delay (d2), s/veh	0.6	0.0	0.8				0.0	0.5	0.1	8.1	0.1	0.0
Initial Q Delay(d3),s/veh	0.0	0.0	0.0				0.0	0.0	0.0	0.0	0.0	0.0
%ile BackOfQ(50%),veh/ln	1.1	0.0	1.2				0.0	3.1	0.6	1.4	1.1	0.0
Unsig. Movement Delay, s/veh												
LnGrp Delay(d),s/veh	18.6	0.0	19.3				0.0	13.4	10.7	31.2	6.0	0.0
LnGrp LOS	B	A	B				A	B	B	C	A	A
Approach Vol, veh/h		353						932			756	
Approach Delay, s/veh		19.1						13.1			9.5	
Approach LOS		B						B			A	

Timer - Assigned Phs	1	2	4	6
Phs Duration (G+Y+Rc), s	9.7	25.8	15.8	35.5
Change Period (Y+Rc), s	* 5.7	6.4	6.1	6.4
Max Green Setting (Gmax), s	* 4.0	43.6	37.9	69.6
Max Q Clear Time (g_c+I1), s	5.0	11.8	6.2	7.0
Green Ext Time (p_c), s	0.2	6.6	1.8	4.8

Intersection Summary	
HCM 6th Ctrl Delay	12.8
HCM 6th LOS	B

Notes

* HCM 6th computational engine requires equal clearance times for the phases crossing the barrier.



Movement	EBL	EBT	EBR	WBL	WBT	WBR	NBL	NBT	NBR	SBL	SBT	SBR
Lane Configurations												
Traffic Volume (veh/h)	76	96	36	2	96	64	59	113	1	126	85	34
Future Volume (veh/h)	76	96	36	2	96	64	59	113	1	126	85	34
Initial Q (Qb), veh	0	0	0	0	0	0	0	0	0	0	0	0
Ped-Bike Adj(A_pbT)	1.00		0.96	1.00		0.94	1.00		0.98	1.00		0.96
Parking Bus, Adj	1.00	1.00	1.00	1.00	1.00	1.00	1.00	1.00	1.00	1.00	1.00	1.00
Work Zone On Approach		No			No			No			No	
Adj Sat Flow, veh/h/ln	1870	1870	1870	1870	1870	1870	1870	1870	1870	1870	1870	1870
Adj Flow Rate, veh/h	96	122	46	3	128	85	82	157	1	233	157	63
Peak Hour Factor	0.79	0.79	0.79	0.75	0.75	0.75	0.72	0.72	0.72	0.54	0.54	0.54
Percent Heavy Veh, %	2	2	2	2	2	2	2	2	2	2	2	2
Cap, veh/h	124	341	277	7	218	175	106	1446	629	248	1210	462
Arrive On Green	0.07	0.18	0.18	0.00	0.12	0.12	0.06	0.41	0.41	0.14	0.49	0.49
Sat Flow, veh/h	1781	1870	1522	1781	1870	1497	1781	3554	1546	1781	2485	948
Grp Volume(v), veh/h	96	122	46	3	128	85	82	157	1	233	110	110
Grp Sat Flow(s),veh/h/ln	1781	1870	1522	1781	1870	1497	1781	1777	1546	1781	1777	1656
Q Serve(g_s), s	3.8	4.1	1.8	0.1	4.7	3.9	3.3	2.0	0.0	9.4	2.5	2.6
Cycle Q Clear(g_c), s	3.8	4.1	1.8	0.1	4.7	3.9	3.3	2.0	0.0	9.4	2.5	2.6
Prop In Lane	1.00		1.00	1.00		1.00	1.00		1.00	1.00		0.57
Lane Grp Cap(c), veh/h	124	341	277	7	218	175	106	1446	629	248	865	806
V/C Ratio(X)	0.78	0.36	0.17	0.42	0.59	0.49	0.78	0.11	0.00	0.94	0.13	0.14
Avail Cap(c_a), veh/h	258	929	756	123	787	630	241	1446	629	248	865	806
HCM Platoon Ratio	1.00	1.00	1.00	1.00	1.00	1.00	1.00	1.00	1.00	1.00	1.00	1.00
Upstream Filter(I)	1.00	1.00	1.00	1.00	1.00	1.00	1.00	1.00	1.00	1.00	1.00	1.00
Uniform Delay (d), s/veh	33.2	25.9	25.0	36.0	30.4	30.0	33.6	13.3	12.8	30.9	10.2	10.2
Incr Delay (d2), s/veh	3.9	0.6	0.3	13.6	2.5	2.1	4.5	0.2	0.0	40.2	0.3	0.4
Initial Q Delay(d3),s/veh	0.0	0.0	0.0	0.0	0.0	0.0	0.0	0.0	0.0	0.0	0.0	0.0
%ile BackOfQ(50%),veh/ln	1.7	1.8	0.7	0.1	2.2	1.4	1.5	0.8	0.0	6.6	0.9	1.0
Unsig. Movement Delay, s/veh												
LnGrp Delay(d),s/veh	37.1	26.6	25.3	49.6	32.8	32.1	38.2	13.5	12.8	71.1	10.5	10.6
LnGrp LOS	D	C	C	D	C	C	D	B	B	E	B	B
Approach Vol, veh/h		264			216			240			453	
Approach Delay, s/veh		30.2			32.8			21.9			41.7	
Approach LOS		C			C			C			D	

Timer - Assigned Phs	1	2	3	4	5	6	7	8
Phs Duration (G+Y+Rc), s	8.9	40.4	9.6	13.6	14.7	34.6	4.9	18.3
Change Period (Y+Rc), s	4.6	5.1	4.6	5.1	4.6	5.1	4.6	5.1
Max Green Setting (Gmax), s	4.3	29.8	10.5	30.5	10.1	29.5	5.0	36.0
Max Q Clear Time (g_c+I1), s	5.3	4.6	5.8	6.7	11.4	4.0	2.1	6.1
Green Ext Time (p_c), s	0.0	1.8	0.0	1.0	0.0	1.3	0.0	0.8

Intersection Summary	
HCM 6th Ctrl Delay	33.4
HCM 6th LOS	C



Movement	EBL	EBT	EBR	WBL	WBT	WBR	NBL	NBT	NBR	SBL	SBT	SBR
Lane Configurations												
Traffic Volume (veh/h)	150	81	74	46	65	185	70	556	66	386	546	199
Future Volume (veh/h)	150	81	74	46	65	185	70	556	66	386	546	199
Initial Q (Qb), veh	0	0	0	0	0	0	0	0	0	0	0	0
Ped-Bike Adj(A_pbT)	1.00		0.96	1.00		0.96	1.00		0.97	1.00		0.98
Parking Bus, Adj	1.00	1.00	1.00	1.00	1.00	1.00	1.00	1.00	1.00	1.00	1.00	1.00
Work Zone On Approach		No			No			No			No	
Adj Sat Flow, veh/h/ln	1870	1870	1870	1870	1870	1870	1870	1870	1870	1870	1870	1870
Adj Flow Rate, veh/h	197	107	97	55	78	223	81	647	77	482	682	249
Peak Hour Factor	0.76	0.76	0.76	0.83	0.83	0.83	0.86	0.86	0.86	0.80	0.80	0.80
Percent Heavy Veh, %	2	2	2	2	2	2	2	2	2	2	2	2
Cap, veh/h	287	302	244	283	297	575	113	771	92	376	1000	365
Arrive On Green	0.16	0.16	0.16	0.16	0.16	0.16	0.06	0.24	0.24	0.21	0.40	0.40
Sat Flow, veh/h	1781	1870	1516	1781	1870	1515	1781	3185	378	1781	2530	923
Grp Volume(v), veh/h	197	107	97	55	78	223	81	360	364	482	479	452
Grp Sat Flow(s),veh/h/ln	1781	1870	1516	1781	1870	1515	1781	1777	1787	1781	1777	1676
Q Serve(g_s), s	12.2	5.9	6.7	3.1	4.3	12.7	5.2	22.5	22.6	24.6	26.0	26.0
Cycle Q Clear(g_c), s	12.2	5.9	6.7	3.1	4.3	12.7	5.2	22.5	22.6	24.6	26.0	26.0
Prop In Lane	1.00		1.00	1.00		1.00	1.00		0.21	1.00		0.55
Lane Grp Cap(c), veh/h	287	302	244	283	297	575	113	430	433	376	702	663
V/C Ratio(X)	0.69	0.35	0.40	0.19	0.26	0.39	0.71	0.84	0.84	1.28	0.68	0.68
Avail Cap(c_a), veh/h	504	529	429	550	577	802	195	455	458	376	702	663
HCM Platoon Ratio	1.00	1.00	1.00	1.00	1.00	1.00	1.00	1.00	1.00	1.00	1.00	1.00
Upstream Filter(I)	1.00	1.00	1.00	1.00	1.00	1.00	1.00	1.00	1.00	1.00	1.00	1.00
Uniform Delay (d), s/veh	46.1	43.5	43.8	42.6	43.1	27.2	53.6	42.0	42.1	46.0	29.2	29.2
Incr Delay (d2), s/veh	4.1	1.0	1.5	0.1	0.2	0.2	3.1	16.2	16.3	146.4	4.6	4.9
Initial Q Delay(d3),s/veh	0.0	0.0	0.0	0.0	0.0	0.0	0.0	0.0	0.0	0.0	0.0	0.0
%ile BackOfQ(50%),veh/ln	5.6	2.8	2.6	1.4	2.0	4.5	2.4	11.5	11.7	25.9	11.6	11.0
Unsig. Movement Delay, s/veh												
LnGrp Delay(d),s/veh	50.2	44.5	45.3	42.7	43.3	27.3	56.7	58.2	58.4	192.4	33.8	34.1
LnGrp LOS	D	D	D	D	D	C	E	E	E	F	C	C
Approach Vol, veh/h		401			356			805			1413	
Approach Delay, s/veh		47.5			33.2			58.1			88.0	
Approach LOS		D			C			E			F	

Timer - Assigned Phs	1	2		4	5	6		8
Phs Duration (G+Y+Rc), s	12.1	53.4		24.9	30.0	35.5		26.2
Change Period (Y+Rc), s	* 4.7	* 7.3		6.4	5.4	7.3		7.4
Max Green Setting (Gmax), s	* 13	* 43		36.0	24.6	29.9		33.0
Max Q Clear Time (g_c+I1), s	7.2	28.0		14.7	26.6	24.6		14.2
Green Ext Time (p_c), s	0.0	9.5		0.7	0.0	3.4		2.1

Intersection Summary	
HCM 6th Ctrl Delay	67.9
HCM 6th LOS	E

Notes

* HCM 6th computational engine requires equal clearance times for the phases crossing the barrier.

Intersection	
Int Delay, s/veh	1.3

Movement	EBL	EBR	NBL	NBT	SBT	SBR
Lane Configurations						
Traffic Vol, veh/h	4	120	140	711	409	11
Future Vol, veh/h	4	120	140	711	409	11
Conflicting Peds, #/hr	10	10	10	0	0	10
Sign Control	Free	Free	Free	Free	Stop	Stop
RT Channelized	-	None	-	None	-	None
Storage Length	0	-	-	-	-	-
Veh in Median Storage, #	2	-	-	0	0	-
Grade, %	0	-	-	0	0	-
Peak Hour Factor	63	63	70	70	75	75
Heavy Vehicles, %	2	2	2	2	2	2
Mvmt Flow	6	190	200	1016	545	15

Major/Minor	Major1		Minor2	
Conflicting Flow All	10	0	1426	20
Stage 1	-	-	10	-
Stage 2	-	-	1416	-
Critical Hdwy	4.14	-	6.54	6.94
Critical Hdwy Stg 1	-	-	-	-
Critical Hdwy Stg 2	-	-	5.54	-
Follow-up Hdwy	2.22	-	4.02	3.32
Pot Cap-1 Maneuver	1608	-	~ 134	1053
Stage 1	-	-	-	-
Stage 2	-	-	~ 202	-
Platoon blocked, %		-		
Mov Cap-1 Maneuver	1593	-	0	1033
Mov Cap-2 Maneuver	-	-	0	-
Stage 1	-	-	0	-
Stage 2	-	-	0	-

Approach	NB	SB
HCM Control Delay, s	1.9	
HCM LOS		-

Minor Lane/Major Mvmt	NBL	NBT	SBLn1	SBLn2
Capacity (veh/h)	1593	-	-	1033
HCM Lane V/C Ratio	0.126	-	-	0.278
HCM Control Delay (s)	7.6	0.8	-	9.8
HCM Lane LOS	A	A	-	A
HCM 95th %tile Q(veh)	0.4	-	-	1.1

Notes			
~: Volume exceeds capacity	$: Delay exceeds 300s	+: Computation Not Defined	*: All major volume in platoon



Movement	WBL	WBR	NBT	NBR	SBL	SBT
Lane Configurations						
Traffic Volume (veh/h)	12	107	624	56	98	333
Future Volume (veh/h)	12	107	624	56	98	333
Initial Q (Qb), veh	0	0	0	0	0	0
Ped-Bike Adj(A_pbT)	1.00	1.00		0.96	1.00	
Parking Bus, Adj	1.00	1.00	1.00	1.00	1.00	1.00
Work Zone On Approach	No		No			No
Adj Sat Flow, veh/h/ln	1870	1870	1870	1870	1870	1870
Adj Flow Rate, veh/h	13	118	800	72	114	387
Peak Hour Factor	0.91	0.91	0.78	0.78	0.86	0.86
Percent Heavy Veh, %	2	2	2	2	2	2
Cap, veh/h	176	156	1630	147	195	1272
Arrive On Green	0.10	0.10	0.50	0.50	0.11	0.68
Sat Flow, veh/h	1781	1585	3378	296	1781	1870
Grp Volume(v), veh/h	13	118	433	439	114	387
Grp Sat Flow(s),veh/h/ln	1781	1585	1777	1804	1781	1870
Q Serve(g_s), s	0.4	4.6	10.3	10.3	3.8	5.3
Cycle Q Clear(g_c), s	0.4	4.6	10.3	10.3	3.8	5.3
Prop In Lane	1.00	1.00		0.16	1.00	
Lane Grp Cap(c), veh/h	176	156	882	895	195	1272
V/C Ratio(X)	0.07	0.76	0.49	0.49	0.58	0.30
Avail Cap(c_a), veh/h	783	697	2029	2060	882	3242
HCM Platoon Ratio	1.00	1.00	1.00	1.00	1.00	1.00
Upstream Filter(I)	1.00	1.00	1.00	1.00	1.00	1.00
Uniform Delay (d), s/veh	25.9	27.8	10.6	10.6	26.8	4.1
Incr Delay (d2), s/veh	0.2	7.2	1.5	1.5	1.0	0.5
Initial Q Delay(d3),s/veh	0.0	0.0	0.0	0.0	0.0	0.0
%ile BackOfQ(50%),veh/ln	0.2	0.3	3.5	3.6	1.6	1.3
Unsig. Movement Delay, s/veh						
LnGrp Delay(d),s/veh	26.1	35.0	12.1	12.1	27.8	4.6
LnGrp LOS	C	C	B	B	C	A
Approach Vol, veh/h	131		872			501
Approach Delay, s/veh	34.1		12.1			9.9
Approach LOS	C		B			A

Timer - Assigned Phs		2		4	5	6
Phs Duration (G+Y+Rc), s		50.8		12.4	11.6	39.2
Change Period (Y+Rc), s		* 7.8		6.2	* 4.7	7.8
Max Green Setting (Gmax), s		* 1.1E2		27.8	* 31	72.2
Max Q Clear Time (g_c+I1), s		7.3		6.6	5.8	12.3
Green Ext Time (p_c), s		7.2		0.3	0.1	19.1

Intersection Summary	
HCM 6th Ctrl Delay	13.3
HCM 6th LOS	B

Notes

* HCM 6th computational engine requires equal clearance times for the phases crossing the barrier.

Intersection	
Int Delay, s/veh	4.7

Movement	EBT	EBR	WBL	WBT	NBL	NBR
Lane Configurations						
Traffic Vol, veh/h	81	33	31	141	62	80
Future Vol, veh/h	81	33	31	141	62	80
Conflicting Peds, #/hr	0	10	10	0	10	10
Sign Control	Free	Free	Free	Free	Stop	Stop
RT Channelized	-	None	-	None	-	None
Storage Length	-	-	-	-	0	-
Veh in Median Storage, #	0	-	-	0	0	-
Grade, %	0	-	-	0	0	-
Peak Hour Factor	91	91	57	57	70	70
Heavy Vehicles, %	2	2	2	2	2	2
Mvmt Flow	89	36	54	247	89	114

Major/Minor	Major1		Major2		Minor1	
Conflicting Flow All	0	0	135	0	482	127
Stage 1	-	-	-	-	117	-
Stage 2	-	-	-	-	365	-
Critical Hdwy	-	-	4.12	-	6.42	6.22
Critical Hdwy Stg 1	-	-	-	-	5.42	-
Critical Hdwy Stg 2	-	-	-	-	5.42	-
Follow-up Hdwy	-	-	2.218	-	3.518	3.318
Pot Cap-1 Maneuver	-	-	1449	-	543	923
Stage 1	-	-	-	-	908	-
Stage 2	-	-	-	-	702	-
Platoon blocked, %	-	-		-		
Mov Cap-1 Maneuver	-	-	1435	-	509	906
Mov Cap-2 Maneuver	-	-	-	-	509	-
Stage 1	-	-	-	-	899	-
Stage 2	-	-	-	-	665	-

Approach	EB	WB	NB
HCM Control Delay, s	0	1.4	12.6
HCM LOS			B

Minor Lane/Major Mvmt	NBLn1	EBT	EBR	WBL	WBT
Capacity (veh/h)	676	-	-	1435	-
HCM Lane V/C Ratio	0.3	-	-	0.038	-
HCM Control Delay (s)	12.6	-	-	7.6	0
HCM Lane LOS	B	-	-	A	A
HCM 95th %tile Q(veh)	1.3	-	-	0.1	-

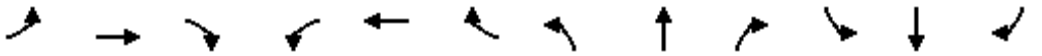

Movement	EBL	EBT	EBR	WBL	WBT	WBR	NBL	NBT	NBR	SBL	SBT	SBR
Lane Configurations												
Traffic Volume (veh/h)	84	49	28	5	51	87	32	578	12	102	304	93
Future Volume (veh/h)	84	49	28	5	51	87	32	578	12	102	304	93
Initial Q (Qb), veh	0	0	0	0	0	0	0	0	0	0	0	0
Ped-Bike Adj(A_pbT)	1.00		0.97	1.00		1.00	1.00		0.97	1.00		0.97
Parking Bus, Adj	1.00	1.00	1.00	1.00	1.00	1.00	1.00	1.00	1.00	1.00	1.00	1.00
Work Zone On Approach		No			No			No			No	
Adj Sat Flow, veh/h/ln	1870	1870	1870	1870	1870	1870	1870	1870	1870	1870	1870	1870
Adj Flow Rate, veh/h	88	52	29	6	64	0	38	680	14	132	395	121
Peak Hour Factor	0.95	0.95	0.95	0.80	0.80	0.80	0.85	0.85	0.85	0.77	0.77	0.77
Percent Heavy Veh, %	2	2	2	2	2	2	2	2	2	2	2	2
Cap, veh/h	115	549	279	14	665		70	1115	483	175	996	301
Arrive On Green	0.06	0.24	0.24	0.01	0.19	0.00	0.04	0.31	0.31	0.10	0.37	0.37
Sat Flow, veh/h	1781	2252	1144	1781	3554	1585	1781	3554	1540	1781	2670	807
Grp Volume(v), veh/h	88	40	41	6	64	0	38	680	14	132	261	255
Grp Sat Flow(s),veh/h/ln	1781	1777	1618	1781	1777	1585	1781	1777	1540	1781	1777	1700
Q Serve(g_s), s	2.9	1.0	1.2	0.2	0.9	0.0	1.3	9.7	0.4	4.3	6.5	6.6
Cycle Q Clear(g_c), s	2.9	1.0	1.2	0.2	0.9	0.0	1.3	9.7	0.4	4.3	6.5	6.6
Prop In Lane	1.00		0.71	1.00		1.00	1.00		1.00	1.00		0.47
Lane Grp Cap(c), veh/h	115	433	395	14	665		70	1115	483	175	663	634
V/C Ratio(X)	0.77	0.09	0.10	0.42	0.10		0.55	0.61	0.03	0.75	0.39	0.40
Avail Cap(c_a), veh/h	459	1334	1215	220	2193		369	2924	1267	846	1938	1854
HCM Platoon Ratio	1.00	1.00	1.00	1.00	1.00	1.00	1.00	1.00	1.00	1.00	1.00	1.00
Upstream Filter(I)	1.00	1.00	1.00	1.00	1.00	0.00	1.00	1.00	1.00	1.00	1.00	1.00
Uniform Delay (d), s/veh	27.5	17.5	17.5	29.5	20.1	0.0	28.2	17.4	14.2	26.2	13.8	13.8
Incr Delay (d2), s/veh	10.1	0.1	0.1	18.9	0.1	0.0	6.5	0.5	0.0	6.4	0.4	0.4
Initial Q Delay(d3),s/veh	0.0	0.0	0.0	0.0	0.0	0.0	0.0	0.0	0.0	0.0	0.0	0.0
%ile BackOfQ(50%),veh/ln	1.5	0.4	0.4	0.2	0.3	0.0	0.6	3.5	0.1	2.0	2.2	2.2
Unsig. Movement Delay, s/veh												
LnGrp Delay(d),s/veh	37.6	17.6	17.7	48.5	20.2	0.0	34.7	18.0	14.2	32.6	14.2	14.2
LnGrp LOS	D	B	B	D	C		C	B	B	C	B	B
Approach Vol, veh/h		169			70	A		732			648	
Approach Delay, s/veh		28.0			22.6			18.8			18.0	
Approach LOS		C			C			B			B	

Timer - Assigned Phs	1	2	3	4	5	6	7	8
Phs Duration (G+Y+Rc), s	10.5	24.6	5.1	19.7	6.9	28.1	8.5	16.3
Change Period (Y+Rc), s	4.6	5.8	4.6	5.1	4.6	5.8	4.6	5.1
Max Green Setting (Gmax), s	28.4	49.2	7.4	44.9	12.4	65.2	15.4	36.9
Max Q Clear Time (g_c+I1), s	6.3	11.7	2.2	3.2	3.3	8.6	4.9	2.9
Green Ext Time (p_c), s	0.3	5.0	0.0	0.4	0.0	3.2	0.1	0.3

Intersection Summary	
HCM 6th Ctrl Delay	19.6
HCM 6th LOS	B

Notes

Unsignalized Delay for [WBR] is excluded from calculations of the approach delay and intersection delay.

Intersection	
Intersection Delay, s/veh	133
Intersection LOS	F

Movement	EBL	EBT	EBR	WBL	WBT	WBR	NBL	NBT	NBR	SBL	SBT	SBR
Lane Configurations												
Traffic Vol, veh/h	131	187	26	43	293	32	49	127	110	67	49	226
Future Vol, veh/h	131	187	26	43	293	32	49	127	110	67	49	226
Peak Hour Factor	0.69	0.69	0.69	0.73	0.73	0.73	0.67	0.67	0.67	0.77	0.77	0.77
Heavy Vehicles, %	2	2	2	2	2	2	2	2	2	2	2	2
Mvmt Flow	190	271	38	59	401	44	73	190	164	87	64	294
Number of Lanes	0	1	1	0	1	0	0	1	0	0	1	1

Approach	EB	WB	NB	SB
Opposing Approach	WB	EB	SB	NB
Opposing Lanes	1	2	2	1
Conflicting Approach Left	SB	NB	EB	WB
Conflicting Lanes Left	2	1	2	1
Conflicting Approach Right	NB	SB	WB	EB
Conflicting Lanes Right	1	2	1	2
HCM Control Delay	143.4	214.6	128.6	33.1
HCM LOS	F	F	F	D

Lane	NBLn1	EBLn1	EBLn2	WBLn1	SBLn1	SBLn2
Vol Left, %	17%	41%	0%	12%	58%	0%
Vol Thru, %	44%	59%	0%	80%	42%	0%
Vol Right, %	38%	0%	100%	9%	0%	100%
Sign Control	Stop	Stop	Stop	Stop	Stop	Stop
Traffic Vol by Lane	286	318	26	368	116	226
LT Vol	49	131	0	43	67	0
Through Vol	127	187	0	293	49	0
RT Vol	110	0	26	32	0	226
Lane Flow Rate	427	461	38	504	151	294
Geometry Grp	6	7	7	6	7	7
Degree of Util (X)	1.141	1.217	0.09	1.371	0.419	0.736
Departure Headway (Hd)	11.305	10.954	9.997	10.96	11.854	10.805
Convergence, Y/N	Yes	Yes	Yes	Yes	Yes	Yes
Cap	324	336	361	338	306	338
Service Time	9.305	8.654	7.697	8.96	9.554	8.505
HCM Lane V/C Ratio	1.318	1.372	0.105	1.491	0.493	0.87
HCM Control Delay	128.6	154	13.7	214.6	22.8	38.4
HCM Lane LOS	F	F	B	F	C	E
HCM 95th-tile Q	14.8	17.5	0.3	22.7	2	5.6

Intersection	
Intersection Delay, s/veh	192.7
Intersection LOS	F

Movement	EBL	EBT	EBR	WBL	WBT	WBR	NBL	NBT	NBR	SBL	SBT	SBR
Lane Configurations												
Traffic Vol, veh/h	53	287	23	0	290	124	22	178	4	138	140	56
Future Vol, veh/h	53	287	23	0	290	124	22	178	4	138	140	56
Peak Hour Factor	0.68	0.68	0.68	0.70	0.70	0.70	0.64	0.64	0.64	0.69	0.69	0.69
Heavy Vehicles, %	2	2	2	2	2	2	2	2	2	2	2	2
Mvmt Flow	78	422	34	0	414	177	34	278	6	200	203	81
Number of Lanes	0	1	0	0	1	0	0	1	0	0	1	0

Approach	EB	WB	NB	SB
Opposing Approach	WB	EB	SB	NB
Opposing Lanes	1	1	1	1
Conflicting Approach Left	SB	NB	EB	WB
Conflicting Lanes Left	1	1	1	1
Conflicting Approach Right	NB	SB	WB	EB
Conflicting Lanes Right	1	1	1	1
HCM Control Delay	216.3	263.7	61.6	166.1
HCM LOS	F	F	F	F

Lane	NBLn1	EBLn1	WBLn1	SBLn1
Vol Left, %	11%	15%	0%	41%
Vol Thru, %	87%	79%	70%	42%
Vol Right, %	2%	6%	30%	17%
Sign Control	Stop	Stop	Stop	Stop
Traffic Vol by Lane	204	363	414	334
LT Vol	22	53	0	138
Through Vol	178	287	290	140
RT Vol	4	23	124	56
Lane Flow Rate	319	534	591	484
Geometry Grp	1	1	1	1
Degree of Util (X)	0.854	1.371	1.49	1.242
Departure Headway (Hd)	13.153	11.417	10.908	11.559
Convergence, Y/N	Yes	Yes	Yes	Yes
Cap	277	326	337	319
Service Time	11.153	9.417	8.908	9.559
HCM Lane V/C Ratio	1.152	1.638	1.754	1.517
HCM Control Delay	61.6	216.3	263.7	166.1
HCM Lane LOS	F	F	F	F
HCM 95th-tile Q	7.2	22	27	17.6

Intersection	
Intersection Delay, s/veh	193.1
Intersection LOS	F

Movement	EBL	EBT	EBR	WBL	WBT	WBR	NBL	NBT	NBR	SBL	SBT	SBR
Lane Configurations												
Traffic Vol, veh/h	105	252	14	43	326	148	8	184	18	83	164	190
Future Vol, veh/h	105	252	14	43	326	148	8	184	18	83	164	190
Peak Hour Factor	0.61	0.61	0.61	0.70	0.70	0.70	0.87	0.87	0.87	0.76	0.76	0.76
Heavy Vehicles, %	2	2	2	2	2	2	2	2	2	2	2	2
Mvmt Flow	172	413	23	61	466	211	9	211	21	109	216	250
Number of Lanes	1	1	0	0	1	0	1	1	0	1	1	0

Approach	EB	WB	NB	SB
Opposing Approach	WB	EB	SB	NB
Opposing Lanes	1	2	2	2
Conflicting Approach Left	SB	NB	EB	WB
Conflicting Lanes Left	2	2	2	1
Conflicting Approach Right	NB	SB	WB	EB
Conflicting Lanes Right	2	2	1	2
HCM Control Delay	81.6	414.5	32	94.3
HCM LOS	F	F	D	F

Lane	NBLn1	NBLn2	EBLn1	EBLn2	WBLn1	SBLn1	SBLn2
Vol Left, %	100%	0%	100%	0%	8%	100%	0%
Vol Thru, %	0%	91%	0%	95%	63%	0%	46%
Vol Right, %	0%	9%	0%	5%	29%	0%	54%
Sign Control	Stop	Stop	Stop	Stop	Stop	Stop	Stop
Traffic Vol by Lane	8	202	105	266	517	83	354
LT Vol	8	0	105	0	43	83	0
Through Vol	0	184	0	252	326	0	164
RT Vol	0	18	0	14	148	0	190
Lane Flow Rate	9	232	172	436	739	109	466
Geometry Grp	7	7	7	7	6	7	7
Degree of Util (X)	0.026	0.625	0.45	1.074	1.849	0.286	1.105
Departure Headway (Hd)	12.558	11.952	11.461	10.89	9.606	11.272	10.337
Convergence, Y/N	Yes	Yes	Yes	Yes	Yes	Yes	Yes
Cap	287	304	317	336	384	321	354
Service Time	10.258	9.652	9.161	8.59	7.606	8.972	8.037
HCM Lane V/C Ratio	0.031	0.763	0.543	1.298	1.924	0.34	1.316
HCM Control Delay	15.6	32.7	23.2	104.7	414.5	18.4	112.1
HCM Lane LOS	C	D	C	F	F	C	F
HCM 95th-tile Q	0.1	3.9	2.2	13.2	45.5	1.2	14.5



Movement	EBL	EBT	EBR	WBL	WBT	WBR	NBL	NBT	NBR	SBL	SBT	SBR
Lane Configurations												
Traffic Volume (veh/h)	68	209	69	4	311	170	101	287	1	89	184	106
Future Volume (veh/h)	68	209	69	4	311	170	101	287	1	89	184	106
Initial Q (Qb), veh	0	0	0	0	0	0	0	0	0	0	0	0
Ped-Bike Adj(A_pbT)	1.00		0.96	1.00		0.96	1.00		0.95	1.00		0.94
Parking Bus, Adj	1.00	1.00	1.00	1.00	1.00	1.00	1.00	1.00	1.00	1.00	1.00	1.00
Work Zone On Approach		No			No			No			No	
Adj Sat Flow, veh/h/ln	1870	1870	1870	1870	1870	1870	1870	1870	1870	1870	1870	1870
Adj Flow Rate, veh/h	100	307	27	6	464	179	146	416	1	97	200	72
Peak Hour Factor	0.68	0.68	0.68	0.67	0.67	0.67	0.69	0.69	0.69	0.92	0.92	0.92
Percent Heavy Veh, %	2	2	2	2	2	2	2	2	2	2	2	2
Cap, veh/h	135	385	31	44	550	210	179	490	1	130	304	109
Arrive On Green	0.43	0.43	0.43	0.43	0.43	0.43	0.10	0.26	0.26	0.07	0.24	0.24
Sat Flow, veh/h	194	893	72	5	1278	488	1781	1865	4	1781	1290	464
Grp Volume(v), veh/h	434	0	0	649	0	0	146	0	417	97	0	272
Grp Sat Flow(s),veh/h/ln	1159	0	0	1770	0	0	1781	0	1869	1781	0	1754
Q Serve(g_s), s	2.8	0.0	0.0	0.0	0.0	0.0	6.9	0.0	18.2	4.6	0.0	12.1
Cycle Q Clear(g_c), s	31.3	0.0	0.0	28.5	0.0	0.0	6.9	0.0	18.2	4.6	0.0	12.1
Prop In Lane	0.23		0.06	0.01		0.28	1.00		0.00	1.00		0.26
Lane Grp Cap(c), veh/h	551	0	0	805	0	0	179	0	491	130	0	413
V/C Ratio(X)	0.79	0.00	0.00	0.81	0.00	0.00	0.82	0.00	0.85	0.74	0.00	0.66
Avail Cap(c_a), veh/h	1452	0	0	1927	0	0	192	0	553	254	0	572
HCM Platoon Ratio	1.00	1.00	1.00	1.00	1.00	1.00	1.00	1.00	1.00	1.00	1.00	1.00
Upstream Filter(I)	1.00	0.00	0.00	1.00	0.00	0.00	1.00	0.00	1.00	1.00	0.00	1.00
Uniform Delay (d), s/veh	21.4	0.0	0.0	22.1	0.0	0.0	38.0	0.0	30.2	39.2	0.0	29.8
Incr Delay (d2), s/veh	2.6	0.0	0.0	2.0	0.0	0.0	20.0	0.0	16.6	3.1	0.0	8.0
Initial Q Delay(d3),s/veh	0.0	0.0	0.0	0.0	0.0	0.0	0.0	0.0	0.0	0.0	0.0	0.0
%ile BackOfQ(50%),veh/ln	8.0	0.0	0.0	11.5	0.0	0.0	3.9	0.0	9.9	2.0	0.0	5.7
Unsig. Movement Delay, s/veh												
LnGrp Delay(d),s/veh	23.9	0.0	0.0	24.1	0.0	0.0	58.0	0.0	46.7	42.3	0.0	37.8
LnGrp LOS	C	A	A	C	A	A	E	A	D	D	A	D
Approach Vol, veh/h		434			649			563			369	
Approach Delay, s/veh		23.9			24.1			49.6			39.0	
Approach LOS		C			C			D			D	

Timer - Assigned Phs	1	2		4	5	6		8
Phs Duration (G+Y+Rc), s	13.4	28.2		44.6	11.0	30.6		44.6
Change Period (Y+Rc), s	* 4.7	7.9		7.5	* 4.7	* 7.9		7.5
Max Green Setting (Gmax), s	* 9.3	28.1		92.5	* 12	* 26		92.5
Max Q Clear Time (g_c+I1), s	8.9	14.1		30.5	6.6	20.2		33.3
Green Ext Time (p_c), s	0.0	3.3		5.7	0.0	2.4		3.8

Intersection Summary		
HCM 6th Ctrl Delay	33.9	
HCM 6th LOS	C	

Notes

* HCM 6th computational engine requires equal clearance times for the phases crossing the barrier.

Intersection	
Int Delay, s/veh	85.7

Movement	EBL	EBT	EBR	WBL	WBT	WBR	NBL	NBT	NBR	SBL	SBT	SBR
Lane Configurations		↕			↕			↕			↕	
Traffic Vol, veh/h	15	193	89	57	272	38	171	72	108	35	38	37
Future Vol, veh/h	15	193	89	57	272	38	171	72	108	35	38	37
Conflicting Peds, #/hr	10	0	10	10	0	10	10	0	10	10	0	10
Sign Control	Free	Free	Free	Free	Free	Free	Stop	Stop	Stop	Stop	Stop	Stop
RT Channelized	-	-	None	-	-	None	-	-	None	-	-	None
Storage Length	-	-	-	-	-	-	-	-	-	-	-	-
Veh in Median Storage, #	-	0	-	-	0	-	-	0	-	-	0	-
Grade, %	-	0	-	-	0	-	-	0	-	-	0	-
Peak Hour Factor	75	75	92	92	77	77	92	92	92	57	92	57
Heavy Vehicles, %	2	2	2	2	2	2	2	2	2	2	2	2
Mvmt Flow	20	257	97	62	353	49	186	78	117	61	41	65

Major/Minor	Major1			Major2			Minor1			Minor2		
Conflicting Flow All	412	0	0	364	0	0	921	892	326	965	916	398
Stage 1	-	-	-	-	-	-	356	356	-	512	512	-
Stage 2	-	-	-	-	-	-	565	536	-	453	404	-
Critical Hdwy	4.12	-	-	4.12	-	-	7.12	6.52	6.22	7.12	6.52	6.22
Critical Hdwy Stg 1	-	-	-	-	-	-	6.12	5.52	-	6.12	5.52	-
Critical Hdwy Stg 2	-	-	-	-	-	-	6.12	5.52	-	6.12	5.52	-
Follow-up Hdwy	2.218	-	-	2.218	-	-	3.518	4.018	3.318	3.518	4.018	3.318
Pot Cap-1 Maneuver	1147	-	-	1195	-	-	251	281	715	234	272	652
Stage 1	-	-	-	-	-	-	661	629	-	545	536	-
Stage 2	-	-	-	-	-	-	510	523	-	586	599	-
Platoon blocked, %		-	-		-	-						
Mov Cap-1 Maneuver	1136	-	-	1184	-	-	~ 180	251	701	136	243	640
Mov Cap-2 Maneuver	-	-	-	-	-	-	~ 180	251	-	136	243	-
Stage 1	-	-	-	-	-	-	641	609	-	528	495	-
Stage 2	-	-	-	-	-	-	388	483	-	412	580	-

Approach	EB	WB	NB	SB
HCM Control Delay, s	0.4	1.1	286.9	52.7
HCM LOS			F	F

Minor Lane/Major Mvmt	NBLn1	EBL	EBT	EBR	WBL	WBT	WBR	SBLn1
Capacity (veh/h)	252	1136	-	-	1184	-	-	232
HCM Lane V/C Ratio	1.514	0.018	-	-	0.052	-	-	0.723
HCM Control Delay (s)	286.9	8.2	0	-	8.2	0	-	52.7
HCM Lane LOS	F	A	A	-	A	A	-	F
HCM 95th %tile Q(veh)	22.5	0.1	-	-	0.2	-	-	4.9

Notes			
~: Volume exceeds capacity	$: Delay exceeds 300s	+: Computation Not Defined	*: All major volume in platoon

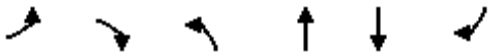

Movement	EBL	EBR	NBL	NBT	SBT	SBR
Lane Configurations						
Traffic Volume (veh/h)	169	170	254	656	278	110
Future Volume (veh/h)	169	170	254	656	278	110
Initial Q (Qb), veh	0	0	0	0	0	0
Ped-Bike Adj(A_pbT)	1.00	1.00	1.00			0.96
Parking Bus, Adj	1.00	1.00	1.00	1.00	1.00	1.00
Work Zone On Approach	No			No	No	
Adj Sat Flow, veh/h/ln	1870	1870	1870	1870	1870	1870
Adj Flow Rate, veh/h	206	207	310	800	343	136
Peak Hour Factor	0.82	0.82	0.82	0.82	0.81	0.81
Percent Heavy Veh, %	2	2	2	2	2	2
Cap, veh/h	294	605	386	1185	431	171
Arrive On Green	0.17	0.17	0.22	0.63	0.34	0.34
Sat Flow, veh/h	1781	1585	1781	1870	1255	498
Grp Volume(v), veh/h	206	207	310	800	0	479
Grp Sat Flow(s),veh/h/ln	1781	1585	1781	1870	0	1753
Q Serve(g_s), s	6.0	5.1	9.0	15.0	0.0	13.5
Cycle Q Clear(g_c), s	6.0	5.1	9.0	15.0	0.0	13.5
Prop In Lane	1.00	1.00	1.00			0.28
Lane Grp Cap(c), veh/h	294	605	386	1185	0	602
V/C Ratio(X)	0.70	0.34	0.80	0.68	0.00	0.80
Avail Cap(c_a), veh/h	652	924	1826	4074	0	1893
HCM Platoon Ratio	1.00	1.00	1.00	1.00	1.00	1.00
Upstream Filter(I)	1.00	1.00	1.00	1.00	0.00	1.00
Uniform Delay (d), s/veh	21.5	12.0	20.3	6.4	0.0	16.2
Incr Delay (d2), s/veh	3.0	0.3	3.9	0.7	0.0	2.4
Initial Q Delay(d3),s/veh	0.0	0.0	0.0	0.0	0.0	0.0
%ile BackOfQ(50%),veh/ln	2.5	0.1	3.6	3.3	0.0	4.8
Unsig. Movement Delay, s/veh						
LnGrp Delay(d),s/veh	24.5	12.3	24.2	7.1	0.0	18.6
LnGrp LOS	C	B	C	A	A	B
Approach Vol, veh/h	413			1110	479	
Approach Delay, s/veh	18.4			11.9	18.6	
Approach LOS	B			B	B	

Timer - Assigned Phs		2		4	5	6
Phs Duration (G+Y+Rc), s		40.6		14.0	15.8	24.8
Change Period (Y+Rc), s		6.0		5.0	4.0	6.0
Max Green Setting (Gmax), s		119.0		20.0	56.0	59.0
Max Q Clear Time (g_c+I1), s		17.0		8.0	11.0	15.5
Green Ext Time (p_c), s		6.7		1.1	0.9	3.3

Intersection Summary		
HCM 6th Ctrl Delay		14.8
HCM 6th LOS		B



Movement	WBL	WBR	NBT	NBR	SBL	SBT
Lane Configurations						
Traffic Volume (veh/h)	97	34	671	154	7	290
Future Volume (veh/h)	97	34	671	154	7	290
Initial Q (Qb), veh	0	0	0	0	0	0
Ped-Bike Adj(A_pbT)	1.00	1.00		0.97	1.00	
Parking Bus, Adj	1.00	1.00	1.00	1.00	1.00	1.00
Work Zone On Approach	No		No			No
Adj Sat Flow, veh/h/ln	1870	1870	1870	1870	1870	1870
Adj Flow Rate, veh/h	145	51	828	190	9	354
Peak Hour Factor	0.67	0.67	0.81	0.81	0.82	0.82
Percent Heavy Veh, %	2	2	2	2	2	2
Cap, veh/h	197	193	955	219	21	1356
Arrive On Green	0.11	0.11	0.65	0.65	0.01	0.72
Sat Flow, veh/h	1781	1585	1461	335	1781	1870
Grp Volume(v), veh/h	145	51	0	1018	9	354
Grp Sat Flow(s),veh/h/ln	1781	1585	0	1796	1781	1870
Q Serve(g_s), s	5.3	1.9	0.0	30.3	0.3	4.3
Cycle Q Clear(g_c), s	5.3	1.9	0.0	30.3	0.3	4.3
Prop In Lane	1.00	1.00		0.19	1.00	
Lane Grp Cap(c), veh/h	197	193	0	1174	21	1356
V/C Ratio(X)	0.74	0.26	0.00	0.87	0.44	0.26
Avail Cap(c_a), veh/h	400	374	0	2958	267	3471
HCM Platoon Ratio	1.00	1.00	1.00	1.00	1.00	1.00
Upstream Filter(I)	1.00	1.00	0.00	1.00	1.00	1.00
Uniform Delay (d), s/veh	28.8	26.6	0.0	9.3	32.8	3.1
Incr Delay (d2), s/veh	5.3	0.7	0.0	2.1	14.1	0.1
Initial Q Delay(d3),s/veh	0.0	0.0	0.0	0.0	0.0	0.0
%ile BackOfQ(50%),veh/ln	2.4	0.7	0.0	7.9	0.2	0.8
Unsig. Movement Delay, s/veh						
LnGrp Delay(d),s/veh	34.0	27.3	0.0	11.4	46.9	3.2
LnGrp LOS	C	C	A	B	D	A
Approach Vol, veh/h	196		1018			363
Approach Delay, s/veh	32.3		11.4			4.3
Approach LOS	C		B			A

Timer - Assigned Phs	1	2				6	8
Phs Duration (G+Y+Rc), s	4.8	49.7				54.4	12.4
Change Period (Y+Rc), s	4.0	6.0				6.0	5.0
Max Green Setting (Gmax), s	10.8	110.0				124.0	15.0
Max Q Clear Time (g_c+I1), s	2.3	32.3				6.3	7.3
Green Ext Time (p_c), s	0.0	11.4				2.2	0.3

Intersection Summary	
HCM 6th Ctrl Delay	12.3
HCM 6th LOS	B



Movement	EBL	EBT	EBR	WBL	WBT	WBR	NBL	NBT	NBR	SBL	SBT	SBR
Lane Configurations												
Traffic Volume (veh/h)	19	121	20	23	105	128	13	23	43	16	4	12
Future Volume (veh/h)	19	121	20	23	105	128	13	23	43	16	4	12
Initial Q (Qb), veh	0	0	0	0	0	0	0	0	0	0	0	0
Ped-Bike Adj(A_pbT)	1.00		0.94	1.00		0.92	0.99		0.98	0.99		0.96
Parking Bus, Adj	1.00	1.00	1.00	1.00	1.00	1.00	1.00	1.00	1.00	1.00	1.00	1.00
Work Zone On Approach		No			No			No			No	
Adj Sat Flow, veh/h/ln	1870	1870	1870	1870	1870	1870	1870	1870	1870	1870	1870	1870
Adj Flow Rate, veh/h	35	224	37	28	130	158	18	32	59	23	6	17
Peak Hour Factor	0.54	0.54	0.54	0.81	0.81	0.81	0.73	0.73	0.73	0.69	0.69	0.69
Percent Heavy Veh, %	2	2	2	2	2	2	2	2	2	2	2	2
Cap, veh/h	42	269	44	48	223	214	139	249	405	696	193	548
Arrive On Green	0.20	0.20	0.20	0.15	0.15	0.15	0.46	0.46	0.46	0.46	0.46	0.46
Sat Flow, veh/h	213	1363	225	329	1525	1462	203	538	874	1299	418	1184
Grp Volume(v), veh/h	296	0	0	158	0	158	109	0	0	23	0	23
Grp Sat Flow(s),veh/h/ln	1801	0	0	1854	0	1462	1615	0	0	1299	0	1601
Q Serve(g_s), s	14.7	0.0	0.0	7.4	0.0	9.6	0.0	0.0	0.0	0.0	0.0	0.7
Cycle Q Clear(g_c), s	14.7	0.0	0.0	7.4	0.0	9.6	3.5	0.0	0.0	0.7	0.0	0.7
Prop In Lane	0.12		0.12	0.18		1.00	0.17		0.54	1.00		0.74
Lane Grp Cap(c), veh/h	355	0	0	271	0	214	793	0	0	696	0	741
V/C Ratio(X)	0.83	0.00	0.00	0.58	0.00	0.74	0.14	0.00	0.00	0.03	0.00	0.03
Avail Cap(c_a), veh/h	775	0	0	978	0	771	793	0	0	696	0	741
HCM Platoon Ratio	1.00	1.00	1.00	1.00	1.00	1.00	1.00	1.00	1.00	1.00	1.00	1.00
Upstream Filter(I)	1.00	0.00	0.00	1.00	0.00	1.00	1.00	0.00	0.00	1.00	0.00	1.00
Uniform Delay (d), s/veh	35.8	0.0	0.0	37.0	0.0	38.0	14.3	0.0	0.0	13.6	0.0	13.6
Incr Delay (d2), s/veh	2.0	0.0	0.0	0.7	0.0	1.9	0.4	0.0	0.0	0.1	0.0	0.1
Initial Q Delay(d3),s/veh	0.0	0.0	0.0	0.0	0.0	0.0	0.0	0.0	0.0	0.0	0.0	0.0
%ile BackOfQ(50%),veh/ln	6.5	0.0	0.0	3.3	0.0	3.4	1.4	0.0	0.0	0.3	0.0	0.3
Unsig. Movement Delay, s/veh												
LnGrp Delay(d),s/veh	37.8	0.0	0.0	37.7	0.0	39.8	14.7	0.0	0.0	13.7	0.0	13.7
LnGrp LOS	D	A	A	D	A	D	B	A	A	B	A	B
Approach Vol, veh/h		296			316			109			46	
Approach Delay, s/veh		37.8			38.8			14.7			13.7	
Approach LOS		D			D			B			B	

Timer - Assigned Phs	2	4	6	8
Phs Duration (G+Y+Rc), s	49.0	24.3	49.0	19.6
Change Period (Y+Rc), s	6.0	6.0	6.0	6.0
Max Green Setting (Gmax), s	43.0	40.0	43.0	49.0
Max Q Clear Time (g_c+I1), s	5.5	16.7	2.7	11.6
Green Ext Time (p_c), s	0.2	1.1	0.4	0.8

Intersection Summary	
HCM 6th Ctrl Delay	33.5
HCM 6th LOS	C



Movement	EBL	EBT	EBR	WBL	WBT	WBR	NBL	NBT	NBR	SBL	SBT	SBR
Lane Configurations												
Traffic Volume (veh/h)	100	35	51	1	55	29	142	1290	21	22	1040	61
Future Volume (veh/h)	100	35	51	1	55	29	142	1290	21	22	1040	61
Initial Q (Qb), veh	0	0	0	0	0	0	0	0	0	0	0	0
Ped-Bike Adj(A_pbT)	1.00		0.95	1.00		0.96	1.00		0.96	1.00		0.98
Parking Bus, Adj	1.00	1.00	1.00	1.00	1.00	1.00	1.00	1.00	1.00	1.00	1.00	1.00
Work Zone On Approach		No			No			No			No	
Adj Sat Flow, veh/h/ln	1870	1870	1870	1870	1870	1870	1870	1870	1870	1870	1870	1870
Adj Flow Rate, veh/h	128	45	65	1	71	37	178	1580	26	29	1368	80
Peak Hour Factor	0.78	0.78	0.78	0.78	0.78	0.78	0.80	0.80	0.80	0.76	0.76	0.76
Percent Heavy Veh, %	2	2	2	2	2	2	2	2	2	2	2	2
Cap, veh/h	144	459	872	5	312	253	279	1716	28	91	1600	825
Arrive On Green	0.08	0.25	0.25	0.00	0.17	0.17	0.08	0.48	0.48	0.05	0.45	0.45
Sat Flow, veh/h	1781	1870	2637	1781	1870	1518	3456	3575	59	1781	3554	1548
Grp Volume(v), veh/h	128	45	65	1	71	37	178	784	822	29	1368	80
Grp Sat Flow(s),veh/h/ln	1781	1870	1318	1781	1870	1518	1728	1777	1857	1781	1777	1548
Q Serve(g_s), s	8.8	2.3	2.1	0.1	4.1	2.6	6.2	50.7	51.0	1.9	42.5	3.2
Cycle Q Clear(g_c), s	8.8	2.3	2.1	0.1	4.1	2.6	6.2	50.7	51.0	1.9	42.5	3.2
Prop In Lane	1.00		1.00	1.00		1.00	1.00		0.03	1.00		1.00
Lane Grp Cap(c), veh/h	144	459	872	5	312	253	279	853	892	91	1600	825
V/C Ratio(X)	0.89	0.10	0.07	0.21	0.23	0.15	0.64	0.92	0.92	0.32	0.85	0.10
Avail Cap(c_a), veh/h	144	696	1207	144	696	565	280	853	892	144	1631	839
HCM Platoon Ratio	1.00	1.00	1.00	1.00	1.00	1.00	1.00	1.00	1.00	1.00	1.00	1.00
Upstream Filter(I)	1.00	1.00	1.00	1.00	1.00	1.00	1.00	1.00	1.00	1.00	1.00	1.00
Uniform Delay (d), s/veh	56.2	36.1	28.8	61.5	44.6	43.9	55.0	29.9	30.0	56.5	30.3	14.3
Incr Delay (d2), s/veh	42.5	0.2	0.1	7.5	0.8	0.6	3.7	16.5	16.3	0.7	6.1	0.2
Initial Q Delay(d3),s/veh	0.0	0.0	0.0	0.0	0.0	0.0	0.0	0.0	0.0	0.0	0.0	0.0
%ile BackOfQ(50%),veh/ln	5.6	1.1	0.7	0.0	2.0	1.0	2.7	23.3	24.4	0.9	17.9	1.2
Unsig. Movement Delay, s/veh												
LnGrp Delay(d),s/veh	98.7	36.3	28.8	69.0	45.3	44.5	58.7	46.4	46.2	57.3	36.4	14.5
LnGrp LOS	F	D	C	E	D	D	E	D	D	E	D	B
Approach Vol, veh/h		238			109			1784			1477	
Approach Delay, s/veh		67.8			45.3			47.6			35.6	
Approach LOS		E			D			D			D	

Timer - Assigned Phs	1	2	3	4	5	6	7	8
Phs Duration (G+Y+Rc), s	12.0	67.7	6.0	37.8	15.7	64.0	15.7	28.1
Change Period (Y+Rc), s	* 5.7	* 8.4	* 5.7	7.5	* 5.7	* 8.4	* 5.7	7.5
Max Green Setting (Gmax), s	* 10	* 57	* 10	46.0	* 10	* 57	* 10	46.0
Max Q Clear Time (g_c+I1), s	10.8	53.0	2.1	4.3	8.2	44.5	10.8	6.1
Green Ext Time (p_c), s	0.0	3.6	0.0	1.0	0.1	11.1	0.0	1.1

Intersection Summary	
HCM 6th Ctrl Delay	43.9
HCM 6th LOS	D

Notes

* HCM 6th computational engine requires equal clearance times for the phases crossing the barrier.

Intersection	
Int Delay, s/veh	2.8

Movement	WBL	WBR	NBT	NBR	SBL	SBT
Lane Configurations						
Traffic Vol, veh/h	18	99	292	9	52	206
Future Vol, veh/h	18	99	292	9	52	206
Conflicting Peds, #/hr	10	10	0	10	10	0
Sign Control	Stop	Stop	Free	Free	Free	Free
RT Channelized	-	None	-	None	-	None
Storage Length	0	-	-	-	-	-
Veh in Median Storage, #	0	-	0	-	-	0
Grade, %	0	-	0	-	-	0
Peak Hour Factor	92	92	92	92	92	92
Heavy Vehicles, %	2	2	2	2	2	2
Mvmt Flow	20	108	317	10	57	224

Major/Minor	Minor1		Major1		Major2	
Conflicting Flow All	680	342	0	0	337	0
Stage 1	332	-	-	-	-	-
Stage 2	348	-	-	-	-	-
Critical Hdwy	6.42	6.22	-	-	4.12	-
Critical Hdwy Stg 1	5.42	-	-	-	-	-
Critical Hdwy Stg 2	5.42	-	-	-	-	-
Follow-up Hdwy	3.518	3.318	-	-	2.218	-
Pot Cap-1 Maneuver	417	701	-	-	1222	-
Stage 1	727	-	-	-	-	-
Stage 2	715	-	-	-	-	-
Platoon blocked, %			-	-		-
Mov Cap-1 Maneuver	387	688	-	-	1210	-
Mov Cap-2 Maneuver	387	-	-	-	-	-
Stage 1	720	-	-	-	-	-
Stage 2	670	-	-	-	-	-

Approach	WB	NB	SB
HCM Control Delay, s	12.4	0	1.6
HCM LOS	B		

Minor Lane/Major Mvmt	NBT	NBR	WBLn1	SBL	SBT
Capacity (veh/h)	-	-	614	1210	-
HCM Lane V/C Ratio	-	-	0.207	0.047	-
HCM Control Delay (s)	-	-	12.4	8.1	0
HCM Lane LOS	-	-	B	A	A
HCM 95th %tile Q(veh)	-	-	0.8	0.1	-

Intersection	
Int Delay, s/veh	15.7

Movement	EBL	EBR	NBL	NBT	SBT	SBR
Lane Configurations						
Traffic Vol, veh/h	99	90	47	812	396	52
Future Vol, veh/h	99	90	47	812	396	52
Conflicting Peds, #/hr	10	10	10	0	0	10
Sign Control	Stop	Stop	Free	Free	Free	Free
RT Channelized	-	None	-	None	-	None
Storage Length	0	-	-	-	-	-
Veh in Median Storage, #	0	-	-	0	0	-
Grade, %	0	-	-	0	0	-
Peak Hour Factor	92	92	92	92	92	92
Heavy Vehicles, %	2	2	2	2	2	2
Mvmt Flow	108	98	51	883	430	57

Major/Minor	Minor2		Major1		Major2	
Conflicting Flow All	1464	479	497	0	-	0
Stage 1	469	-	-	-	-	-
Stage 2	995	-	-	-	-	-
Critical Hdwy	6.42	6.22	4.12	-	-	-
Critical Hdwy Stg 1	5.42	-	-	-	-	-
Critical Hdwy Stg 2	5.42	-	-	-	-	-
Follow-up Hdwy	3.518	3.318	2.218	-	-	-
Pot Cap-1 Maneuver	141	587	1067	-	-	-
Stage 1	630	-	-	-	-	-
Stage 2	358	-	-	-	-	-
Platoon blocked, %				-	-	-
Mov Cap-1 Maneuver	125	576	1057	-	-	-
Mov Cap-2 Maneuver	125	-	-	-	-	-
Stage 1	564	-	-	-	-	-
Stage 2	354	-	-	-	-	-

Approach	EB	NB	SB
HCM Control Delay, s	122.3	0.5	0
HCM LOS	F		

Minor Lane/Major Mvmt	NBL	NBT	EBLn1	SBT	SBR
Capacity (veh/h)	1057	-	199	-	-
HCM Lane V/C Ratio	0.048	-	1.032	-	-
HCM Control Delay (s)	8.6	0	122.3	-	-
HCM Lane LOS	A	A	F	-	-
HCM 95th %tile Q(veh)	0.2	-	9.2	-	-

Intersection	
Int Delay, s/veh	3.1

Movement	WBL	WBR	NBT	NBR	SBL	SBT
Lane Configurations						
Traffic Vol, veh/h	27	90	211	14	47	177
Future Vol, veh/h	27	90	211	14	47	177
Conflicting Peds, #/hr	10	10	0	10	10	0
Sign Control	Stop	Stop	Free	Free	Free	Free
RT Channelized	-	None	-	None	-	None
Storage Length	0	-	-	-	-	-
Veh in Median Storage, #	0	-	0	-	-	0
Grade, %	0	-	0	-	-	0
Peak Hour Factor	92	92	92	92	92	92
Heavy Vehicles, %	2	2	2	2	2	2
Mvmt Flow	29	98	229	15	51	192

Major/Minor	Minor1		Major1		Major2	
Conflicting Flow All	551	257	0	0	254	0
Stage 1	247	-	-	-	-	-
Stage 2	304	-	-	-	-	-
Critical Hdwy	6.42	6.22	-	-	4.12	-
Critical Hdwy Stg 1	5.42	-	-	-	-	-
Critical Hdwy Stg 2	5.42	-	-	-	-	-
Follow-up Hdwy	3.518	3.318	-	-	2.218	-
Pot Cap-1 Maneuver	495	782	-	-	1311	-
Stage 1	794	-	-	-	-	-
Stage 2	748	-	-	-	-	-
Platoon blocked, %			-	-		-
Mov Cap-1 Maneuver	464	767	-	-	1299	-
Mov Cap-2 Maneuver	464	-	-	-	-	-
Stage 1	786	-	-	-	-	-
Stage 2	708	-	-	-	-	-

Approach	WB	NB	SB
HCM Control Delay, s	11.7	0	1.7
HCM LOS	B		

Minor Lane/Major Mvmt	NBT	NBR	WBLn1	SBL	SBT
Capacity (veh/h)	-	-	667	1299	-
HCM Lane V/C Ratio	-	-	0.191	0.039	-
HCM Control Delay (s)	-	-	11.7	7.9	0
HCM Lane LOS	-	-	B	A	A
HCM 95th %tile Q(veh)	-	-	0.7	0.1	-

Intersection	
Int Delay, s/veh	10.8

Movement	EBL	EBR	NBL	NBT	SBT	SBR
Lane Configurations						
Traffic Vol, veh/h	80	101	45	841	455	29
Future Vol, veh/h	80	101	45	841	455	29
Conflicting Peds, #/hr	10	10	10	0	0	10
Sign Control	Stop	Stop	Free	Free	Free	Free
RT Channelized	-	None	-	None	-	None
Storage Length	0	-	410	-	-	80
Veh in Median Storage, #	0	-	-	0	0	-
Grade, %	0	-	-	0	0	-
Peak Hour Factor	92	92	92	92	92	92
Heavy Vehicles, %	2	2	2	2	2	2
Mvmt Flow	87	110	49	914	495	32

Major/Minor	Minor2		Major1		Major2	
Conflicting Flow All	1527	515	537	0	-	0
Stage 1	505	-	-	-	-	-
Stage 2	1022	-	-	-	-	-
Critical Hdwy	6.42	6.22	4.12	-	-	-
Critical Hdwy Stg 1	5.42	-	-	-	-	-
Critical Hdwy Stg 2	5.42	-	-	-	-	-
Follow-up Hdwy	3.518	3.318	2.218	-	-	-
Pot Cap-1 Maneuver	129	560	1031	-	-	-
Stage 1	606	-	-	-	-	-
Stage 2	347	-	-	-	-	-
Platoon blocked, %				-	-	-
Mov Cap-1 Maneuver	120	549	1021	-	-	-
Mov Cap-2 Maneuver	120	-	-	-	-	-
Stage 1	571	-	-	-	-	-
Stage 2	344	-	-	-	-	-

Approach	EB	NB	SB
HCM Control Delay, s	90.3	0.4	0
HCM LOS	F		

Minor Lane/Major Mvmt	NBL	NBT	EBLn1	SBT	SBR
Capacity (veh/h)	1021	-	213	-	-
HCM Lane V/C Ratio	0.048	-	0.924	-	-
HCM Control Delay (s)	8.7	-	90.3	-	-
HCM Lane LOS	A	-	F	-	-
HCM 95th %tile Q(veh)	0.2	-	7.6	-	-

Intersection	
Int Delay, s/veh	5.8

Movement	EBL	EBT	WBT	WBR	SBL	SBR
Lane Configurations						
Traffic Vol, veh/h	0	0	0	14	27	0
Future Vol, veh/h	0	0	0	14	27	0
Conflicting Peds, #/hr	10	0	0	10	10	10
Sign Control	Free	Free	Free	Free	Stop	Stop
RT Channelized	-	None	-	None	-	None
Storage Length	-	-	-	-	0	-
Veh in Median Storage, #	-	0	0	-	0	-
Grade, %	-	0	0	-	0	-
Peak Hour Factor	92	92	92	92	92	92
Heavy Vehicles, %	2	2	2	2	2	2
Mvmt Flow	0	0	0	15	29	0

Major/Minor	Major1		Major2		Minor2	
Conflicting Flow All	25	0	-	0	28	28
Stage 1	-	-	-	-	18	-
Stage 2	-	-	-	-	10	-
Critical Hdwy	4.12	-	-	-	6.42	6.22
Critical Hdwy Stg 1	-	-	-	-	5.42	-
Critical Hdwy Stg 2	-	-	-	-	5.42	-
Follow-up Hdwy	2.218	-	-	-	3.518	3.318
Pot Cap-1 Maneuver	1589	-	-	-	987	1047
Stage 1	-	-	-	-	1005	-
Stage 2	-	-	-	-	1013	-
Platoon blocked, %		-	-	-		
Mov Cap-1 Maneuver	1574	-	-	-	967	1027
Mov Cap-2 Maneuver	-	-	-	-	967	-
Stage 1	-	-	-	-	995	-
Stage 2	-	-	-	-	1003	-

Approach	EB	WB	SB
HCM Control Delay, s	0	0	8.8
HCM LOS			A

Minor Lane/Major Mvmt	EBL	EBT	WBT	WBR	SBLn1
Capacity (veh/h)	1574	-	-	-	967
HCM Lane V/C Ratio	-	-	-	-	0.03
HCM Control Delay (s)	0	-	-	-	8.8
HCM Lane LOS	A	-	-	-	A
HCM 95th %tile Q(veh)	0	-	-	-	0.1

Intersection	
Int Delay, s/veh	3.4

Movement	EBL	EBT	WBT	WBR	SBL	SBR
Lane Configurations						
Traffic Vol, veh/h	0	27	14	19	36	0
Future Vol, veh/h	0	27	14	19	36	0
Conflicting Peds, #/hr	10	0	0	10	10	10
Sign Control	Free	Free	Free	Free	Stop	Stop
RT Channelized	-	None	-	None	-	None
Storage Length	-	-	-	-	0	-
Veh in Median Storage, #	-	0	0	-	0	-
Grade, %	-	0	0	-	0	-
Peak Hour Factor	92	92	92	92	92	92
Heavy Vehicles, %	2	2	2	2	2	2
Mvmt Flow	0	29	15	21	39	0

Major/Minor	Major1		Major2		Minor2	
Conflicting Flow All	46	0	-	0	75	46
Stage 1	-	-	-	-	36	-
Stage 2	-	-	-	-	39	-
Critical Hdwy	4.12	-	-	-	6.42	6.22
Critical Hdwy Stg 1	-	-	-	-	5.42	-
Critical Hdwy Stg 2	-	-	-	-	5.42	-
Follow-up Hdwy	2.218	-	-	-	3.518	3.318
Pot Cap-1 Maneuver	1562	-	-	-	928	1023
Stage 1	-	-	-	-	986	-
Stage 2	-	-	-	-	983	-
Platoon blocked, %		-	-	-		
Mov Cap-1 Maneuver	1547	-	-	-	909	1004
Mov Cap-2 Maneuver	-	-	-	-	909	-
Stage 1	-	-	-	-	976	-
Stage 2	-	-	-	-	973	-

Approach	EB	WB	SB
HCM Control Delay, s	0	0	9.1
HCM LOS			A

Minor Lane/Major Mvmt	EBL	EBT	WBT	WBR	SBLn1
Capacity (veh/h)	1547	-	-	-	909
HCM Lane V/C Ratio	-	-	-	-	0.043
HCM Control Delay (s)	0	-	-	-	9.1
HCM Lane LOS	A	-	-	-	A
HCM 95th %tile Q(veh)	0	-	-	-	0.1

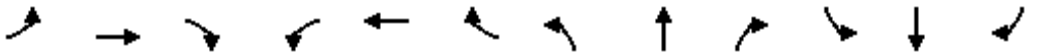

Movement	EBL	EBT	EBR	WBL	WBT	WBR	NBL	NBT	NBR	SBL	SBT	SBR
Lane Configurations												
Traffic Volume (veh/h)	140	125	137	219	88	285	56	388	38	174	280	48
Future Volume (veh/h)	140	125	137	219	88	285	56	388	38	174	280	48
Initial Q (Qb), veh	0	0	0	0	0	0	0	0	0	0	0	0
Ped-Bike Adj(A_pbT)	1.00		0.96	1.00		0.95	1.00		0.97	1.00		0.97
Parking Bus, Adj	1.00	1.00	1.00	1.00	1.00	1.00	1.00	1.00	1.00	1.00	1.00	1.00
Work Zone On Approach		No			No			No			No	
Adj Sat Flow, veh/h/ln	1870	1870	1870	1870	1870	1870	1870	1870	1870	1870	1870	1870
Adj Flow Rate, veh/h	192	171	188	284	114	370	66	456	45	207	333	57
Peak Hour Factor	0.73	0.73	0.73	0.77	0.77	0.77	0.85	0.85	0.85	0.84	0.84	0.84
Percent Heavy Veh, %	2	2	2	2	2	2	2	2	2	2	2	2
Cap, veh/h	223	412	337	316	510	410	172	501	49	237	1019	172
Arrive On Green	0.13	0.22	0.22	0.18	0.27	0.27	0.10	0.30	0.30	0.13	0.34	0.34
Sat Flow, veh/h	1781	1870	1529	1781	1870	1504	1781	1670	165	1781	3027	512
Grp Volume(v), veh/h	192	171	188	284	114	370	66	0	501	207	194	196
Grp Sat Flow(s),veh/h/ln	1781	1870	1529	1781	1870	1504	1781	0	1835	1781	1777	1761
Q Serve(g_s), s	11.3	8.4	11.6	16.6	5.0	25.3	3.7	0.0	28.0	12.1	8.7	8.9
Cycle Q Clear(g_c), s	11.3	8.4	11.6	16.6	5.0	25.3	3.7	0.0	28.0	12.1	8.7	8.9
Prop In Lane	1.00		1.00	1.00		1.00	1.00		0.09	1.00		0.29
Lane Grp Cap(c), veh/h	223	412	337	316	510	410	172	0	551	237	599	593
V/C Ratio(X)	0.86	0.41	0.56	0.90	0.22	0.90	0.38	0.00	0.91	0.87	0.32	0.33
Avail Cap(c_a), veh/h	301	412	337	434	544	437	201	0	620	284	683	677
HCM Platoon Ratio	1.00	1.00	1.00	1.00	1.00	1.00	1.00	1.00	1.00	1.00	1.00	1.00
Upstream Filter(I)	1.00	1.00	1.00	1.00	1.00	1.00	1.00	0.00	1.00	1.00	1.00	1.00
Uniform Delay (d), s/veh	45.7	35.7	36.9	42.9	30.0	37.4	45.2	0.0	35.9	45.3	26.3	26.4
Incr Delay (d2), s/veh	13.8	0.9	2.6	14.1	0.3	21.5	0.5	0.0	17.0	19.4	0.4	0.5
Initial Q Delay(d3),s/veh	0.0	0.0	0.0	0.0	0.0	0.0	0.0	0.0	0.0	0.0	0.0	0.0
%ile BackOfQ(50%),veh/ln	5.8	3.9	4.6	8.5	2.3	11.6	1.6	0.0	14.6	6.6	3.7	3.7
Unsig. Movement Delay, s/veh												
LnGrp Delay(d),s/veh	59.5	36.6	39.5	57.0	30.3	58.9	45.7	0.0	52.9	64.7	26.8	26.8
LnGrp LOS	E	D	D	E	C	E	D	A	D	E	C	C
Approach Vol, veh/h		551			768			567			597	
Approach Delay, s/veh		45.6			54.0			52.1			39.9	
Approach LOS		D			D			D			D	

Timer - Assigned Phs	1	2	3	4	5	6	7	8
Phs Duration (G+Y+Rc), s	18.2	38.0	22.9	27.5	14.3	41.9	17.3	33.1
Change Period (Y+Rc), s	4.0	6.0	4.0	4.0	4.0	6.0	4.0	4.0
Max Green Setting (Gmax), s	17.0	36.0	26.0	23.0	12.0	41.0	18.0	31.0
Max Q Clear Time (g_c+I1), s	14.1	30.0	18.6	13.6	5.7	10.9	13.3	27.3
Green Ext Time (p_c), s	0.1	2.0	0.3	1.6	0.0	3.4	0.1	1.1

Intersection Summary	
HCM 6th Ctrl Delay	48.3
HCM 6th LOS	D

Intersection	
Intersection Delay, s/veh	156
Intersection LOS	F

Movement	EBL	EBT	EBR	WBL	WBT	WBR	NBL	NBT	NBR	SBL	SBT	SBR
Lane Configurations												
Traffic Vol, veh/h	12	153	138	33	224	181	160	193	15	288	227	69
Future Vol, veh/h	12	153	138	33	224	181	160	193	15	288	227	69
Peak Hour Factor	0.77	0.77	0.77	0.83	0.83	0.83	0.85	0.85	0.85	0.83	0.83	0.83
Heavy Vehicles, %	2	2	2	2	2	2	2	2	2	2	2	2
Mvmt Flow	16	199	179	40	270	218	188	227	18	347	273	83
Number of Lanes	0	1	1	0	1	1	0	1	0	0	1	0

Approach	EB	WB	NB	SB
Opposing Approach	WB	EB	SB	NB
Opposing Lanes	2	2	1	1
Conflicting Approach Left	SB	NB	EB	WB
Conflicting Lanes Left	1	1	2	2
Conflicting Approach Right	NB	SB	WB	EB
Conflicting Lanes Right	1	1	2	2
HCM Control Delay	24.9	36.4	98	354.8
HCM LOS	C	E	F	F

Lane	NBLn1	EBLn1	EBLn2	WBLn1	WBLn2	SBLn1
Vol Left, %	43%	7%	0%	13%	0%	49%
Vol Thru, %	52%	93%	0%	87%	0%	39%
Vol Right, %	4%	0%	100%	0%	100%	12%
Sign Control	Stop	Stop	Stop	Stop	Stop	Stop
Traffic Vol by Lane	368	165	138	257	181	584
LT Vol	160	12	0	33	0	288
Through Vol	193	153	0	224	0	227
RT Vol	15	0	138	0	181	69
Lane Flow Rate	433	214	179	310	218	704
Geometry Grp	2	7	7	7	7	2
Degree of Util (X)	1.055	0.568	0.438	0.797	0.515	1.716
Departure Headway (Hd)	10.603	11.372	10.586	11.002	10.189	9.083
Convergence, Y/N	Yes	Yes	Yes	Yes	Yes	Yes
Cap	346	319	342	331	358	408
Service Time	8.603	9.072	8.286	8.702	7.889	7.083
HCM Lane V/C Ratio	1.251	0.671	0.523	0.937	0.609	1.725
HCM Control Delay	98	28	21.3	45.7	23.2	354.8
HCM Lane LOS	F	D	C	E	C	F
HCM 95th-tile Q	12.8	3.3	2.1	6.6	2.8	41.6

Intersection	
Intersection Delay, s/veh	6.2
Intersection LOS	A

Approach	EB	WB	NB	SB
Entry Lanes	1	1	1	1
Conflicting Circle Lanes	1	1	1	1
Adj Approach Flow, veh/h	384	385	76	208
Demand Flow Rate, veh/h	392	393	77	212
Vehicles Circulating, veh/h	209	67	525	420
Vehicles Exiting, veh/h	423	535	75	39
Ped Vol Crossing Leg, #/h	10	10	10	10
Ped Cap Adj	0.999	0.999	0.999	0.999
Approach Delay, s/veh	6.8	5.6	5.5	6.5
Approach LOS	A	A	A	A

Lane	Left	Left	Left	Left
Designated Moves	LTR	LTR	LTR	LTR
Assumed Moves	LTR	LTR	LTR	LTR
RT Channelized				
Lane Util	1.000	1.000	1.000	1.000
Follow-Up Headway, s	2.609	2.609	2.609	2.609
Critical Headway, s	4.976	4.976	4.976	4.976
Entry Flow, veh/h	392	393	77	212
Cap Entry Lane, veh/h	1115	1289	808	899
Entry HV Adj Factor	0.979	0.979	0.984	0.982
Flow Entry, veh/h	384	385	76	208
Cap Entry, veh/h	1090	1260	794	881
V/C Ratio	0.352	0.305	0.095	0.236
Control Delay, s/veh	6.8	5.6	5.5	6.5
LOS	A	A	A	A
95th %tile Queue, veh	2	1	0	1

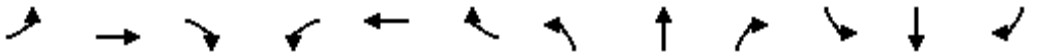

Movement	EBL	EBT	EBR	WBL	WBT	WBR	NBL	NBT	NBR	SBL	SBT	SBR
Lane Configurations												
Traffic Volume (veh/h)	74	128	106	74	156	116	128	695	68	108	853	50
Future Volume (veh/h)	74	128	106	74	156	116	128	695	68	108	853	50
Initial Q (Qb), veh	0	0	0	0	0	0	0	0	0	0	0	0
Ped-Bike Adj(A_pbT)	1.00		0.96	1.00		0.96	1.00		0.96	1.00		0.96
Parking Bus, Adj	1.00	1.00	1.00	1.00	1.00	1.00	1.00	1.00	1.00	1.00	1.00	1.00
Work Zone On Approach		No			No			No			No	
Adj Sat Flow, veh/h/ln	1870	1870	1870	1870	1870	1870	1870	1870	1870	1870	1870	1870
Adj Flow Rate, veh/h	80	139	115	94	197	147	133	724	71	117	927	54
Peak Hour Factor	0.92	0.92	0.92	0.79	0.79	0.79	0.96	0.96	0.96	0.92	0.92	0.92
Percent Heavy Veh, %	2	2	2	2	2	2	2	2	2	2	2	2
Cap, veh/h	101	290	235	117	307	249	159	1663	163	142	1706	99
Arrive On Green	0.06	0.16	0.16	0.07	0.16	0.16	0.09	0.51	0.51	0.08	0.50	0.50
Sat Flow, veh/h	1781	1870	1514	1781	1870	1517	1781	3256	319	1781	3404	198
Grp Volume(v), veh/h	80	139	115	94	197	147	133	395	400	117	484	497
Grp Sat Flow(s),veh/h/ln	1781	1870	1514	1781	1870	1517	1781	1777	1799	1781	1777	1826
Q Serve(g_s), s	5.3	8.1	8.3	6.2	11.8	10.8	8.8	16.8	16.8	7.8	22.4	22.4
Cycle Q Clear(g_c), s	5.3	8.1	8.3	6.2	11.8	10.8	8.8	16.8	16.8	7.8	22.4	22.4
Prop In Lane	1.00		1.00	1.00		1.00	1.00		0.18	1.00		0.11
Lane Grp Cap(c), veh/h	101	290	235	117	307	249	159	908	919	142	891	915
V/C Ratio(X)	0.79	0.48	0.49	0.80	0.64	0.59	0.83	0.44	0.44	0.82	0.54	0.54
Avail Cap(c_a), veh/h	154	500	405	169	516	418	214	908	919	181	891	915
HCM Platoon Ratio	1.00	1.00	1.00	1.00	1.00	1.00	1.00	1.00	1.00	1.00	1.00	1.00
Upstream Filter(I)	1.00	1.00	1.00	0.77	0.77	0.77	0.88	0.88	0.88	1.00	1.00	1.00
Uniform Delay (d), s/veh	55.9	46.3	46.4	55.3	46.9	46.4	53.8	18.5	18.5	54.4	20.5	20.5
Incr Delay (d2), s/veh	7.0	0.5	0.6	7.9	0.6	0.6	13.0	1.3	1.3	16.8	2.4	2.3
Initial Q Delay(d3),s/veh	0.0	0.0	0.0	0.0	0.0	0.0	0.0	0.0	0.0	0.0	0.0	0.0
%ile BackOfQ(50%),veh/ln	2.6	3.8	3.2	3.0	5.5	4.1	4.5	7.2	7.3	4.1	9.7	10.0
Unsig. Movement Delay, s/veh												
LnGrp Delay(d),s/veh	62.9	46.7	47.0	63.2	47.5	47.1	66.7	19.8	19.8	71.1	22.9	22.8
LnGrp LOS	E	D	D	E	D	D	E	B	B	E	C	C
Approach Vol, veh/h		334			438			928			1098	
Approach Delay, s/veh		50.7			50.7			26.5			28.0	
Approach LOS		D			D			C			C	

Timer - Assigned Phs	1	2	3	4	5	6	7	8
Phs Duration (G+Y+Rc), s	15.2	67.0	13.5	24.3	16.3	65.8	12.4	25.4
Change Period (Y+Rc), s	5.6	5.7	5.6	5.7	5.6	5.7	5.6	5.7
Max Green Setting (Gmax), s	12.2	41.7	11.4	32.1	14.4	39.5	10.4	33.1
Max Q Clear Time (g_c+I1), s	9.8	18.8	8.2	10.3	10.8	24.4	7.3	13.8
Green Ext Time (p_c), s	0.0	3.4	0.0	0.6	0.1	3.9	0.0	0.9

Intersection Summary	
HCM 6th Ctrl Delay	33.8
HCM 6th LOS	C



Movement	EBL	EBT	EBR	WBL	WBT	WBR	NBL	NBT	NBR	SBL	SBT	SBR
Lane Configurations												
Traffic Volume (veh/h)	40	194	101	24	174	30	101	439	28	67	638	55
Future Volume (veh/h)	40	194	101	24	174	30	101	439	28	67	638	55
Initial Q (Qb), veh	0	0	0	0	0	0	0	0	0	0	0	0
Ped-Bike Adj(A_pbT)	1.00		0.97	0.99		0.97	1.00		0.96	1.00		0.96
Parking Bus, Adj	1.00	1.00	1.00	1.00	1.00	1.00	1.00	1.00	1.00	1.00	1.00	1.00
Work Zone On Approach		No			No			No			No	
Adj Sat Flow, veh/h/ln	1870	1870	1870	1870	1870	1870	1870	1870	1870	1870	1870	1870
Adj Flow Rate, veh/h	49	237	123	32	235	41	117	510	33	88	839	72
Peak Hour Factor	0.82	0.82	0.82	0.74	0.74	0.74	0.86	0.86	0.86	0.76	0.76	0.76
Percent Heavy Veh, %	2	2	2	2	2	2	2	2	2	2	2	2
Cap, veh/h	158	435	226	83	330	54	152	1251	81	114	1151	99
Arrive On Green	0.09	0.38	0.38	0.24	0.24	0.24	0.09	0.37	0.37	0.06	0.35	0.35
Sat Flow, veh/h	1781	1149	596	103	1399	231	1781	3378	218	1781	3298	283
Grp Volume(v), veh/h	49	0	360	308	0	0	117	268	275	88	452	459
Grp Sat Flow(s),veh/h/ln	1781	0	1745	1733	0	0	1781	1777	1820	1781	1777	1804
Q Serve(g_s), s	1.8	0.0	11.0	4.5	0.0	0.0	4.4	7.6	7.7	3.3	15.1	15.1
Cycle Q Clear(g_c), s	1.8	0.0	11.0	11.0	0.0	0.0	4.4	7.6	7.7	3.3	15.1	15.1
Prop In Lane	1.00		0.34	0.10		0.13	1.00		0.12	1.00		0.16
Lane Grp Cap(c), veh/h	158	0	661	467	0	0	152	658	674	114	620	629
V/C Ratio(X)	0.31	0.00	0.54	0.66	0.00	0.00	0.77	0.41	0.41	0.77	0.73	0.73
Avail Cap(c_a), veh/h	296	0	1243	896	0	0	374	1239	1269	296	1161	1179
HCM Platoon Ratio	1.00	1.00	1.00	1.00	1.00	1.00	1.00	1.00	1.00	1.00	1.00	1.00
Upstream Filter(I)	1.00	0.00	1.00	1.00	0.00	0.00	1.00	1.00	1.00	1.00	1.00	1.00
Uniform Delay (d), s/veh	29.1	0.0	16.5	24.0	0.0	0.0	30.5	15.9	15.9	31.4	19.4	19.4
Incr Delay (d2), s/veh	1.1	0.0	0.7	1.6	0.0	0.0	7.9	0.4	0.4	10.3	1.7	1.6
Initial Q Delay(d3),s/veh	0.0	0.0	0.0	0.0	0.0	0.0	0.0	0.0	0.0	0.0	0.0	0.0
%ile BackOfQ(50%),veh/ln	0.8	0.0	4.0	4.4	0.0	0.0	2.1	2.9	3.0	1.7	6.0	6.1
Unsig. Movement Delay, s/veh												
LnGrp Delay(d),s/veh	30.2	0.0	17.2	25.6	0.0	0.0	38.4	16.3	16.3	41.7	21.0	21.0
LnGrp LOS	C	A	B	C	A	A	D	B	B	D	C	C
Approach Vol, veh/h		409			308			660			999	
Approach Delay, s/veh		18.8			25.6			20.2			22.8	
Approach LOS		B			C			C			C	

Timer - Assigned Phs	1	2		4	5	6	7	8
Phs Duration (G+Y+Rc), s	8.1	29.7		30.3	9.5	28.3	9.7	20.6
Change Period (Y+Rc), s	3.7	4.5		4.5	3.7	4.5	3.7	4.5
Max Green Setting (Gmax), s	11.3	47.5		48.5	14.3	44.5	11.3	33.5
Max Q Clear Time (g_c+I1), s	5.3	9.7		13.0	6.4	17.1	3.8	13.0
Green Ext Time (p_c), s	0.1	3.6		2.4	0.2	6.6	0.0	1.8

Intersection Summary		
HCM 6th Ctrl Delay		21.8
HCM 6th LOS		C



Movement	EBL	EBT	EBR	WBL	WBT	WBR	NBL	NBT	NBR	SBL	SBT	SBR
Lane Configurations												
Traffic Volume (veh/h)	39	141	88	152	132	184	43	688	98	104	851	32
Future Volume (veh/h)	39	141	88	152	132	184	43	688	98	104	851	32
Initial Q (Qb), veh	0	0	0	0	0	0	0	0	0	0	0	0
Ped-Bike Adj(A_pbT)	1.00		0.96	1.00		0.96	1.00		0.95	1.00		0.96
Parking Bus, Adj	1.00	1.00	1.00	1.00	1.00	1.00	1.00	1.00	1.00	1.00	1.00	1.00
Work Zone On Approach		No			No			No			No	
Adj Sat Flow, veh/h/ln	1870	1870	1870	1870	1870	1870	1870	1870	1870	1870	1870	1870
Adj Flow Rate, veh/h	42	152	95	158	138	192	54	871	124	118	967	36
Peak Hour Factor	0.93	0.93	0.93	0.96	0.96	0.96	0.79	0.79	0.79	0.88	0.88	0.88
Percent Heavy Veh, %	2	2	2	2	2	2	2	2	2	2	2	2
Cap, veh/h	52	187	117	200	174	314	73	997	142	143	1258	47
Arrive On Green	0.21	0.21	0.21	0.21	0.21	0.21	0.04	0.32	0.32	0.08	0.36	0.36
Sat Flow, veh/h	251	910	569	972	849	1527	1781	3101	441	1781	3487	130
Grp Volume(v), veh/h	289	0	0	296	0	192	54	499	496	118	493	510
Grp Sat Flow(s),veh/h/ln	1730	0	0	1822	0	1527	1781	1777	1765	1781	1777	1840
Q Serve(g_s), s	19.8	0.0	0.0	19.1	0.0	14.2	3.7	32.9	32.9	8.1	30.4	30.4
Cycle Q Clear(g_c), s	19.8	0.0	0.0	19.1	0.0	14.2	3.7	32.9	32.9	8.1	30.4	30.4
Prop In Lane	0.15		0.33	0.53		1.00	1.00		0.25	1.00		0.07
Lane Grp Cap(c), veh/h	355	0	0	374	0	314	73	571	568	143	641	664
V/C Ratio(X)	0.81	0.00	0.00	0.79	0.00	0.61	0.74	0.87	0.87	0.83	0.77	0.77
Avail Cap(c_a), veh/h	516	0	0	543	0	455	88	593	589	162	667	691
HCM Platoon Ratio	1.00	1.00	1.00	1.00	1.00	1.00	1.00	1.00	1.00	1.00	1.00	1.00
Upstream Filter(I)	1.00	0.00	0.00	1.00	0.00	1.00	1.00	1.00	1.00	1.00	1.00	1.00
Uniform Delay (d), s/veh	47.1	0.0	0.0	46.8	0.0	44.8	58.9	39.7	39.7	56.2	35.1	35.1
Incr Delay (d2), s/veh	6.4	0.0	0.0	5.0	0.0	1.9	18.2	15.9	15.9	23.2	7.7	7.5
Initial Q Delay(d3),s/veh	0.0	0.0	0.0	0.0	0.0	0.0	0.0	0.0	0.0	0.0	0.0	0.0
%ile BackOfQ(50%),veh/ln	9.1	0.0	0.0	9.1	0.0	5.5	2.0	16.4	16.3	4.5	14.1	14.6
Unsig. Movement Delay, s/veh												
LnGrp Delay(d),s/veh	53.5	0.0	0.0	51.7	0.0	46.7	77.0	55.6	55.7	79.4	42.8	42.5
LnGrp LOS	D	A	A	D	A	D	E	E	E	E	D	D
Approach Vol, veh/h		289			488			1049			1121	
Approach Delay, s/veh		53.5			49.8			56.7			46.5	
Approach LOS		D			D			E			D	

Timer - Assigned Phs	1	2		4	5	6		8
Phs Duration (G+Y+Rc), s	10.8	50.2		31.6	15.6	45.3		31.6
Change Period (Y+Rc), s	* 5.7	5.4		6.1	* 5.7	5.4		6.1
Max Green Setting (Gmax), s	* 6.1	46.6		37.0	* 11	41.4		37.0
Max Q Clear Time (g_c+I1), s	15.7	32.4		21.1	10.1	34.9		21.8
Green Ext Time (p_c), s	0.0	9.8		2.1	0.0	5.0		1.5

Intersection Summary	
HCM 6th Ctrl Delay	51.4
HCM 6th LOS	D

Notes

* HCM 6th computational engine requires equal clearance times for the phases crossing the barrier.



Movement	EBL	EBT	EBR	WBL	WBT	WBR	NBL	NBT	NBR	SBL	SBT	SBR
Lane Configurations												
Traffic Volume (veh/h)	57	110	198	79	153	68	137	557	44	46	568	56
Future Volume (veh/h)	57	110	198	79	153	68	137	557	44	46	568	56
Initial Q (Qb), veh	0	0	0	0	0	0	0	0	0	0	0	0
Ped-Bike Adj(A_pbT)	1.00		0.91	1.00		0.95	1.00		0.96	1.00		0.95
Parking Bus, Adj	1.00	1.00	1.00	1.00	1.00	1.00	1.00	1.00	1.00	1.00	1.00	1.00
Work Zone On Approach		No			No			No			No	
Adj Sat Flow, veh/h/ln	1870	1870	1870	1870	1870	1870	1870	1870	1870	1870	1870	1870
Adj Flow Rate, veh/h	63	121	218	125	243	108	152	619	49	50	617	61
Peak Hour Factor	0.91	0.91	0.91	0.63	0.63	0.63	0.90	0.90	0.90	0.92	0.92	0.92
Percent Heavy Veh, %	2	2	2	2	2	2	2	2	2	2	2	2
Cap, veh/h	74	142	169	119	232	103	169	671	53	64	627	507
Arrive On Green	0.12	0.12	0.12	0.26	0.26	0.26	0.09	0.39	0.39	0.04	0.34	0.34
Sat Flow, veh/h	630	1209	1439	459	893	397	1781	1704	135	1781	1870	1513
Grp Volume(v), veh/h	184	0	218	476	0	0	152	0	668	50	617	61
Grp Sat Flow(s),veh/h/ln	1839	0	1439	1750	0	0	1781	0	1839	1781	1870	1513
Q Serve(g_s), s	11.8	0.0	14.1	31.1	0.0	0.0	10.1	0.0	41.5	3.3	39.3	3.4
Cycle Q Clear(g_c), s	11.8	0.0	14.1	31.1	0.0	0.0	10.1	0.0	41.5	3.3	39.3	3.4
Prop In Lane	0.34		1.00	0.26		0.23	1.00		0.07	1.00		1.00
Lane Grp Cap(c), veh/h	216	0	169	453	0	0	169	0	724	64	627	507
V/C Ratio(X)	0.85	0.00	1.29	1.05	0.00	0.00	0.90	0.00	0.92	0.78	0.98	0.12
Avail Cap(c_a), veh/h	216	0	169	453	0	0	169	0	724	86	627	507
HCM Platoon Ratio	1.00	1.00	1.00	1.00	1.00	1.00	1.00	1.00	1.00	1.00	1.00	1.00
Upstream Filter(I)	1.00	0.00	1.00	1.00	0.00	0.00	1.00	0.00	1.00	1.00	1.00	1.00
Uniform Delay (d), s/veh	51.9	0.0	53.0	44.5	0.0	0.0	53.7	0.0	34.6	57.4	39.6	27.6
Incr Delay (d2), s/veh	25.2	0.0	167.0	55.9	0.0	0.0	40.5	0.0	17.0	18.8	31.9	0.0
Initial Q Delay(d3),s/veh	0.0	0.0	0.0	0.0	0.0	0.0	0.0	0.0	0.0	0.0	0.0	0.0
%ile BackOfQ(50%),veh/ln	6.9	0.0	12.9	20.2	0.0	0.0	6.3	0.0	20.9	1.8	22.7	1.2
Unsig. Movement Delay, s/veh												
LnGrp Delay(d),s/veh	77.1	0.0	219.9	100.3	0.0	0.0	94.2	0.0	51.6	76.2	71.5	27.7
LnGrp LOS	E	A	F	F	A	A	F	A	D	E	E	C
Approach Vol, veh/h		402			476			820			728	
Approach Delay, s/veh		154.6			100.3			59.5			68.2	
Approach LOS		F			F			E			E	

Timer - Assigned Phs	1	2		4	5	6		8
Phs Duration (G+Y+Rc), s	9.9	53.1		20.0	17.0	46.0		37.0
Change Period (Y+Rc), s	5.6	5.8		5.9	5.6	5.8		5.9
Max Green Setting (Gmax), s	5.8	45.8		14.1	11.4	40.2		31.1
Max Q Clear Time (g_c+I1), s	5.3	43.5		16.1	12.1	41.3		33.1
Green Ext Time (p_c), s	0.0	0.7		0.0	0.0	0.0		0.0

Intersection Summary		
HCM 6th Ctrl Delay		85.9
HCM 6th LOS		F

Intersection	
Intersection Delay, s/veh	69.2
Intersection LOS	F

Movement	EBL	EBT	EBR	WBL	WBT	WBR	NBL	NBT	NBR	SBL	SBT	SBR
Lane Configurations												
Traffic Vol, veh/h	43	124	83	45	114	59	61	448	41	120	574	62
Future Vol, veh/h	43	124	83	45	114	59	61	448	41	120	574	62
Peak Hour Factor	0.81	0.81	0.81	0.89	0.89	0.89	0.86	0.86	0.86	0.73	0.73	0.73
Heavy Vehicles, %	2	2	2	2	2	2	2	2	2	2	2	2
Mvmt Flow	53	153	102	51	128	66	71	521	48	164	786	85
Number of Lanes	0	1	0	0	1	0	1	2	0	1	2	0

Approach	EB	WB	NB	SB
Opposing Approach	WB	EB	SB	NB
Opposing Lanes	1	1	3	3
Conflicting Approach Left	SB	NB	EB	WB
Conflicting Lanes Left	3	3	1	1
Conflicting Approach Right	NB	SB	WB	EB
Conflicting Lanes Right	3	3	1	1
HCM Control Delay	42.6	30.9	35.8	106.8
HCM LOS	E	D	E	F

Lane	NBLn1	NBLn2	NBLn3	EBLn1	WBLn1	SBLn1	SBLn2	SBLn3
Vol Left, %	100%	0%	0%	17%	21%	100%	0%	0%
Vol Thru, %	0%	100%	78%	50%	52%	0%	100%	76%
Vol Right, %	0%	0%	22%	33%	27%	0%	0%	24%
Sign Control	Stop	Stop	Stop	Stop	Stop	Stop	Stop	Stop
Traffic Vol by Lane	61	299	190	250	218	120	383	253
LT Vol	61	0	0	43	45	120	0	0
Through Vol	0	299	149	124	114	0	383	191
RT Vol	0	0	41	83	59	0	0	62
Lane Flow Rate	71	347	221	309	245	164	524	347
Geometry Grp	7	7	7	7	7	7	7	7
Degree of Util (X)	0.186	0.861	0.539	0.803	0.665	0.43	1.296	0.84
Departure Headway (Hd)	9.905	9.377	9.217	9.86	10.181	9.424	8.897	8.716
Convergence, Y/N	Yes	Yes	Yes	Yes	Yes	Yes	Yes	Yes
Cap	365	389	394	370	358	385	414	416
Service Time	7.605	7.077	6.917	7.56	7.881	7.139	6.611	6.431
HCM Lane V/C Ratio	0.195	0.892	0.561	0.835	0.684	0.426	1.266	0.834
HCM Control Delay	14.9	48.7	22.2	42.6	30.9	19.1	176.4	43.2
HCM Lane LOS	B	E	C	E	D	C	F	E
HCM 95th-tile Q	0.7	8.3	3.1	6.9	4.6	2.1	23.4	8



Movement	EBL	EBT	EBR	WBL	WBT	WBR	NBL	NBT	NBR	SBL	SBT	SBR
Lane Configurations												
Traffic Volume (veh/h)	79	51	212	61	29	17	84	715	37	19	881	57
Future Volume (veh/h)	79	51	212	61	29	17	84	715	37	19	881	57
Initial Q (Qb), veh	0	0	0	0	0	0	0	0	0	0	0	0
Ped-Bike Adj(A_pbT)	1.00		0.96	1.00		0.95	1.00		0.96	1.00		0.96
Parking Bus, Adj	1.00	1.00	1.00	1.00	1.00	1.00	1.00	1.00	1.00	1.00	1.00	1.00
Work Zone On Approach		No			No			No			No	
Adj Sat Flow, veh/h/ln	1870	1870	1870	1870	1870	1870	1870	1870	1870	1870	1870	1870
Adj Flow Rate, veh/h	101	65	272	80	38	22	87	737	38	21	958	62
Peak Hour Factor	0.78	0.78	0.78	0.76	0.76	0.76	0.97	0.97	0.97	0.92	0.92	0.92
Percent Heavy Veh, %	2	2	2	2	2	2	2	2	2	2	2	2
Cap, veh/h	223	143	308	127	60	35	120	1455	75	64	1327	86
Arrive On Green	0.20	0.20	0.20	0.13	0.13	0.13	0.07	0.42	0.42	0.04	0.39	0.39
Sat Flow, veh/h	1104	711	1526	1002	476	275	1781	3430	177	1781	3378	219
Grp Volume(v), veh/h	166	0	272	140	0	0	87	382	393	21	504	516
Grp Sat Flow(s),veh/h/ln	1815	0	1526	1753	0	0	1781	1777	1830	1781	1777	1820
Q Serve(g_s), s	7.4	0.0	16.0	7.0	0.0	0.0	4.4	14.6	14.6	1.1	22.2	22.2
Cycle Q Clear(g_c), s	7.4	0.0	16.0	7.0	0.0	0.0	4.4	14.6	14.6	1.1	22.2	22.2
Prop In Lane	0.61		1.00	0.57		0.16	1.00		0.10	1.00		0.12
Lane Grp Cap(c), veh/h	366	0	308	222	0	0	120	754	776	64	698	715
V/C Ratio(X)	0.45	0.00	0.88	0.63	0.00	0.00	0.72	0.51	0.51	0.33	0.72	0.72
Avail Cap(c_a), veh/h	418	0	352	499	0	0	202	857	883	160	815	835
HCM Platoon Ratio	1.00	1.00	1.00	1.00	1.00	1.00	1.00	1.00	1.00	1.00	1.00	1.00
Upstream Filter(I)	1.00	0.00	1.00	1.00	0.00	0.00	1.00	1.00	1.00	1.00	1.00	1.00
Uniform Delay (d), s/veh	32.4	0.0	35.8	38.3	0.0	0.0	42.2	19.5	19.5	43.5	23.8	23.8
Incr Delay (d2), s/veh	0.9	0.0	20.5	2.9	0.0	0.0	3.0	1.9	1.9	1.1	5.4	5.3
Initial Q Delay(d3),s/veh	0.0	0.0	0.0	0.0	0.0	0.0	0.0	0.0	0.0	0.0	0.0	0.0
%ile BackOfQ(50%),veh/ln	3.3	0.0	7.6	3.2	0.0	0.0	2.0	6.0	6.1	0.5	9.7	9.9
Unsig. Movement Delay, s/veh												
LnGrp Delay(d),s/veh	33.3	0.0	56.3	41.2	0.0	0.0	45.3	21.4	21.4	44.5	29.2	29.0
LnGrp LOS	C	A	E	D	A	A	D	C	C	D	C	C
Approach Vol, veh/h		438			140			862			1041	
Approach Delay, s/veh		47.6			41.2			23.8			29.4	
Approach LOS		D			D			C			C	

Timer - Assigned Phs	1	2		4	5	6		8
Phs Duration (G+Y+Rc), s	11.0	41.7		16.4	8.0	44.6		23.4
Change Period (Y+Rc), s	* 4.7	5.4		* 4.7	* 4.7	5.4		4.7
Max Green Setting (Gmax), s	* 11	42.4		* 26	* 8.3	44.6		21.3
Max Q Clear Time (g_c+I1), s	6.4	24.2		9.0	3.1	16.6		18.0
Green Ext Time (p_c), s	0.0	12.1		0.6	0.0	12.1		0.7

Intersection Summary	
HCM 6th Ctrl Delay	31.3
HCM 6th LOS	C

Notes

* HCM 6th computational engine requires equal clearance times for the phases crossing the barrier.



Movement	EBL	EBT	EBR	WBL	WBT	WBR	NBL	NBT	NBR	SBL	SBT	SBR
Lane Configurations												
Traffic Volume (veh/h)	104	61	249	79	66	56	202	553	42	61	773	95
Future Volume (veh/h)	104	61	249	79	66	56	202	553	42	61	773	95
Initial Q (Qb), veh	0	0	0	0	0	0	0	0	0	0	0	0
Ped-Bike Adj(A_pbT)	1.00		0.97	0.99		0.96	1.00		0.96	1.00		0.97
Parking Bus, Adj	1.00	1.00	1.00	1.00	1.00	1.00	1.00	1.00	1.00	1.00	1.00	1.00
Work Zone On Approach		No			No			No			No	
Adj Sat Flow, veh/h/ln	1870	1870	1870	1870	1870	1870	1870	1870	1870	1870	1870	1870
Adj Flow Rate, veh/h	116	68	277	92	77	65	217	595	45	65	822	101
Peak Hour Factor	0.90	0.90	0.90	0.86	0.86	0.86	0.93	0.93	0.93	0.94	0.94	0.94
Percent Heavy Veh, %	2	2	2	2	2	2	2	2	2	2	2	2
Cap, veh/h	145	675	557	155	121	86	253	1370	103	84	1001	123
Arrive On Green	0.08	0.36	0.36	0.22	0.22	0.22	0.14	0.41	0.41	0.05	0.32	0.32
Sat Flow, veh/h	1781	1870	1543	464	549	390	1781	3337	252	1781	3174	390
Grp Volume(v), veh/h	116	68	277	234	0	0	217	316	324	65	460	463
Grp Sat Flow(s),veh/h/ln	1781	1870	1543	1402	0	0	1781	1777	1812	1781	1777	1787
Q Serve(g_s), s	6.2	2.3	13.5	12.0	0.0	0.0	11.5	12.3	12.3	3.5	23.0	23.0
Cycle Q Clear(g_c), s	6.2	2.3	13.5	14.7	0.0	0.0	11.5	12.3	12.3	3.5	23.0	23.0
Prop In Lane	1.00		1.00	0.39		0.28	1.00		0.14	1.00		0.22
Lane Grp Cap(c), veh/h	145	675	557	363	0	0	253	729	744	84	560	564
V/C Ratio(X)	0.80	0.10	0.50	0.65	0.00	0.00	0.86	0.43	0.44	0.78	0.82	0.82
Avail Cap(c_a), veh/h	194	954	787	526	0	0	340	810	826	176	646	649
HCM Platoon Ratio	1.00	1.00	1.00	1.00	1.00	1.00	1.00	1.00	1.00	1.00	1.00	1.00
Upstream Filter(I)	1.00	1.00	1.00	1.00	0.00	0.00	1.00	1.00	1.00	1.00	1.00	1.00
Uniform Delay (d), s/veh	43.5	20.4	24.0	34.6	0.0	0.0	40.4	20.4	20.4	45.4	30.5	30.5
Incr Delay (d2), s/veh	11.5	0.0	0.3	0.7	0.0	0.0	15.0	0.6	0.6	5.7	8.1	8.0
Initial Q Delay(d3),s/veh	0.0	0.0	0.0	0.0	0.0	0.0	0.0	0.0	0.0	0.0	0.0	0.0
%ile BackOfQ(50%),veh/ln	3.2	1.0	4.8	5.1	0.0	0.0	6.0	5.1	5.2	1.7	10.8	10.9
Unsig. Movement Delay, s/veh												
LnGrp Delay(d),s/veh	55.0	20.4	24.2	35.3	0.0	0.0	55.3	20.9	20.9	51.0	38.5	38.5
LnGrp LOS	D	C	C	D	A	A	E	C	C	D	D	D
Approach Vol, veh/h		461			234			857			988	
Approach Delay, s/veh		31.4			35.3			29.6			39.3	
Approach LOS		C			D			C			D	

Timer - Assigned Phs	1	2		4	5	6	7	8
Phs Duration (G+Y+Rc), s	10.1	45.2		40.9	19.3	36.1	13.4	27.5
Change Period (Y+Rc), s	5.6	5.7		6.2	5.6	5.7	5.6	6.2
Max Green Setting (Gmax), s	9.5	43.9		49.1	18.4	35.0	10.5	33.0
Max Q Clear Time (g_c+I1), s	15.5	14.3		15.5	13.5	25.0	8.2	16.7
Green Ext Time (p_c), s	0.0	6.2		0.8	0.3	5.3	0.0	0.9

Intersection Summary		
HCM 6th Ctrl Delay		34.3
HCM 6th LOS		C



Movement	EBL	EBT	EBR	WBL	WBT	WBR	NBL	NBT	NBR	SBL	SBT	SBR
Lane Configurations												
Traffic Volume (veh/h)	0	0	0	239	2	284	247	848	0	0	1174	103
Future Volume (veh/h)	0	0	0	239	2	284	247	848	0	0	1174	103
Initial Q (Qb), veh				0	0	0	0	0	0	0	0	0
Ped-Bike Adj(A_pbT)				1.00		0.96	1.00		1.00	1.00		0.96
Parking Bus, Adj				1.00	1.00	1.00	1.00	1.00	1.00	1.00	1.00	1.00
Work Zone On Approach					No			No			No	
Adj Sat Flow, veh/h/ln				1870	1870	1870	1870	1870	0	0	1870	1870
Adj Flow Rate, veh/h				257	2	240	334	1146	0	0	1334	117
Peak Hour Factor				0.93	0.93	0.93	0.74	0.74	0.74	0.88	0.88	0.88
Percent Heavy Veh, %				2	2	2	2	2	0	0	2	2
Cap, veh/h				374	3	323	330	2444	0	0	1508	132
Arrive On Green				0.21	0.21	0.21	0.19	0.69	0.00	0.00	0.46	0.46
Sat Flow, veh/h				1768	14	1528	1781	3647	0	0	3388	288
Grp Volume(v), veh/h				259	0	240	334	1146	0	0	717	734
Grp Sat Flow(s),veh/h/ln				1782	0	1528	1781	1777	0	0	1777	1805
Q Serve(g_s), s				14.0	0.0	15.3	19.3	15.5	0.0	0.0	38.2	38.8
Cycle Q Clear(g_c), s				14.0	0.0	15.3	19.3	15.5	0.0	0.0	38.2	38.8
Prop In Lane				0.99		1.00	1.00		0.00	0.00		0.16
Lane Grp Cap(c), veh/h				377	0	323	330	2444	0	0	813	826
V/C Ratio(X)				0.69	0.00	0.74	1.01	0.47	0.00	0.00	0.88	0.89
Avail Cap(c_a), veh/h				634	0	543	330	2467	0	0	825	838
HCM Platoon Ratio				1.00	1.00	1.00	1.00	1.00	1.00	1.00	1.00	1.00
Upstream Filter(I)				1.00	0.00	1.00	1.00	1.00	0.00	0.00	1.00	1.00
Uniform Delay (d), s/veh				37.9	0.0	38.5	42.5	7.5	0.0	0.0	25.7	25.9
Incr Delay (d2), s/veh				2.2	0.0	3.4	53.0	0.5	0.0	0.0	12.6	13.1
Initial Q Delay(d3),s/veh				0.0	0.0	0.0	0.0	0.0	0.0	0.0	0.0	0.0
%ile BackOfQ(50%),veh/ln				6.3	0.0	6.0	13.0	5.0	0.0	0.0	17.7	18.3
Unsig. Movement Delay, s/veh												
LnGrp Delay(d),s/veh				40.2	0.0	41.8	95.5	8.0	0.0	0.0	38.3	38.9
LnGrp LOS				D	A	D	F	A	A	A	D	D
Approach Vol, veh/h					499			1480			1451	
Approach Delay, s/veh					41.0			27.8			38.6	
Approach LOS					D			C			D	

Timer - Assigned Phs	1	2		4		6						
Phs Duration (G+Y+Rc), s	24.0	53.1		27.2		77.1						
Change Period (Y+Rc), s	4.7	5.4		5.1		5.4						
Max Green Setting (Gmax), s	19.3	48.4		37.1		72.4						
Max Q Clear Time (g_c+I1), s	21.3	40.8		17.3		17.5						
Green Ext Time (p_c), s	0.0	6.9		2.4		28.7						

Intersection Summary	
HCM 6th Ctrl Delay	34.3
HCM 6th LOS	C

Notes

* HCM 6th computational engine requires equal clearance times for the phases crossing the barrier.



Movement	EBL	EBT	EBR	WBL	WBT	WBR	NBL	NBT	NBR	SBL	SBT	SBR
Lane Configurations												
Traffic Volume (veh/h)	75	3	337	0	0	0	0	1019	332	403	1011	0
Future Volume (veh/h)	75	3	337	0	0	0	0	1019	332	403	1011	0
Initial Q (Qb), veh	0	0	0				0	0	0	0	0	0
Ped-Bike Adj(A_pbT)	1.00		0.97				1.00		0.96	1.00		1.00
Parking Bus, Adj	1.00	1.00	1.00				1.00	1.00	1.00	1.00	1.00	1.00
Work Zone On Approach		No						No			No	
Adj Sat Flow, veh/h/ln	1870	1870	1870				0	1870	1870	1870	1870	0
Adj Flow Rate, veh/h	93	4	323				0	1274	415	486	1218	0
Peak Hour Factor	0.81	0.81	0.81				0.80	0.80	0.80	0.83	0.83	0.83
Percent Heavy Veh, %	2	2	2				0	2	2	2	2	0
Cap, veh/h	82	4	283				0	1247	532	511	2409	0
Arrive On Green	0.23	0.23	0.23				0.00	0.35	0.35	0.29	0.68	0.00
Sat Flow, veh/h	351	15	1218				0	3647	1515	1781	3647	0
Grp Volume(v), veh/h	420	0	0				0	1274	415	486	1218	0
Grp Sat Flow(s),veh/h/ln	1583	0	0				0	1777	1515	1781	1777	0
Q Serve(g_s), s	27.3	0.0	0.0				0.0	41.2	28.8	31.4	19.7	0.0
Cycle Q Clear(g_c), s	27.3	0.0	0.0				0.0	41.2	28.8	31.4	19.7	0.0
Prop In Lane	0.22		0.77				0.00		1.00	1.00		0.00
Lane Grp Cap(c), veh/h	368	0	0				0	1247	532	511	2409	0
V/C Ratio(X)	1.14	0.00	0.00				0.00	1.02	0.78	0.95	0.51	0.00
Avail Cap(c_a), veh/h	368	0	0				0	1247	532	551	2488	0
HCM Platoon Ratio	1.00	1.00	1.00				1.00	1.00	1.00	1.00	1.00	1.00
Upstream Filter(I)	1.00	0.00	0.00				0.00	1.00	1.00	1.00	1.00	0.00
Uniform Delay (d), s/veh	45.0	0.0	0.0				0.0	38.1	34.1	41.0	9.3	0.0
Incr Delay (d2), s/veh	90.9	0.0	0.0				0.0	31.0	9.9	25.0	0.6	0.0
Initial Q Delay(d3),s/veh	0.0	0.0	0.0				0.0	0.0	0.0	0.0	0.0	0.0
%ile BackOfQ(50%),veh/ln	19.9	0.0	0.0				0.0	22.5	11.7	16.9	6.8	0.0
Unsig. Movement Delay, s/veh												
LnGrp Delay(d),s/veh	136.0	0.0	0.0				0.0	69.1	44.0	66.0	9.9	0.0
LnGrp LOS	F	A	A				A	F	D	E	A	A
Approach Vol, veh/h		420						1689			1704	
Approach Delay, s/veh		136.0						62.9			25.9	
Approach LOS		F						E			C	

Timer - Assigned Phs		2			5	6		8				
Phs Duration (G+Y+Rc), s		85.0			38.4	46.6		32.4				
Change Period (Y+Rc), s		5.4			* 4.7	5.4		5.1				
Max Green Setting (Gmax), s		82.2			* 36	41.2		27.3				
Max Q Clear Time (g_c+I1), s		21.7			33.4	43.2		29.3				
Green Ext Time (p_c), s		32.8			0.3	0.0		0.0				

Intersection Summary												
HCM 6th Ctrl Delay			54.4									
HCM 6th LOS			D									

Notes

* HCM 6th computational engine requires equal clearance times for the phases crossing the barrier.



Movement	EBL	EBT	EBR	WBL	WBT	WBR	NBL	NBT	NBR	SBL	SBT	SBR
Lane Configurations												
Traffic Volume (veh/h)	0	0	0	184	6	63	0	669	340	0	845	73
Future Volume (veh/h)	0	0	0	184	6	63	0	669	340	0	845	73
Initial Q (Qb), veh				0	0	0	0	0	0	0	0	0
Ped-Bike Adj(A_pbT)				1.00		0.97	1.00		0.96	1.00		0.96
Parking Bus, Adj				1.00	1.00	1.00	1.00	1.00	1.00	1.00	1.00	1.00
Work Zone On Approach					No			No			No	
Adj Sat Flow, veh/h/ln				1870	1870	1870	0	1870	1870	0	1870	1870
Adj Flow Rate, veh/h				230	8	79	0	719	366	0	1006	87
Peak Hour Factor				0.80	0.80	0.80	0.93	0.93	0.93	0.84	0.84	0.84
Percent Heavy Veh, %				2	2	2	0	2	2	0	2	2
Cap, veh/h				412	14	366	0	1614	692	0	2167	187
Arrive On Green				0.24	0.24	0.24	0.00	0.45	0.45	0.00	0.45	0.45
Sat Flow, veh/h				1724	60	1532	0	3647	1523	0	4938	412
Grp Volume(v), veh/h				238	0	79	0	719	366	0	717	376
Grp Sat Flow(s),veh/h/ln				1784	0	1532	0	1777	1523	0	1702	1777
Q Serve(g_s), s				4.8	0.0	1.7	0.0	5.6	7.0	0.0	5.9	6.0
Cycle Q Clear(g_c), s				4.8	0.0	1.7	0.0	5.6	7.0	0.0	5.9	6.0
Prop In Lane				0.97		1.00	0.00		1.00	0.00		0.23
Lane Grp Cap(c), veh/h				427	0	366	0	1614	692	0	1546	807
V/C Ratio(X)				0.56	0.00	0.22	0.00	0.45	0.53	0.00	0.46	0.47
Avail Cap(c_a), veh/h				2052	0	1762	0	5282	2264	0	5059	2641
HCM Platoon Ratio				1.00	1.00	1.00	1.00	1.00	1.00	1.00	1.00	1.00
Upstream Filter(I)				1.00	0.00	1.00	0.00	1.00	1.00	0.00	1.00	1.00
Uniform Delay (d), s/veh				13.6	0.0	12.4	0.0	7.6	8.0	0.0	7.7	7.7
Incr Delay (d2), s/veh				1.1	0.0	0.3	0.0	0.2	0.6	0.0	0.2	0.4
Initial Q Delay(d3),s/veh				0.0	0.0	0.0	0.0	0.0	0.0	0.0	0.0	0.0
%ile BackOfQ(50%),veh/ln				1.7	0.0	0.5	0.0	1.3	1.5	0.0	1.3	1.4
Unsig. Movement Delay, s/veh												
LnGrp Delay(d),s/veh				14.8	0.0	12.7	0.0	7.8	8.6	0.0	7.9	8.1
LnGrp LOS				B	A	B	A	A	A	A	A	A
Approach Vol, veh/h					317			1085			1093	
Approach Delay, s/veh					14.3			8.1			8.0	
Approach LOS					B			A			A	

Timer - Assigned Phs	2		6		8			
Phs Duration (G+Y+Rc), s	24.9		24.9		15.9			
Change Period (Y+Rc), s	6.4		6.4		6.1			
Max Green Setting (Gmax), s	60.6		60.6		46.9			
Max Q Clear Time (g_c+I1), s	9.0		8.0		6.8			
Green Ext Time (p_c), s	7.2		8.7		1.8			

Intersection Summary		
HCM 6th Ctrl Delay	8.8	
HCM 6th LOS	A	



Movement	EBL	EBT	EBR	WBL	WBT	WBR	NBL	NBT	NBR	SBL	SBT	SBR
Lane Configurations												
Traffic Volume (veh/h)	50	2	428	0	0	0	0	959	237	127	902	0
Future Volume (veh/h)	50	2	428	0	0	0	0	959	237	127	902	0
Initial Q (Qb), veh	0	0	0				0	0	0	0	0	0
Ped-Bike Adj(A_pbT)	1.00		0.95				1.00		0.96	1.00		1.00
Parking Bus, Adj	1.00	1.00	1.00				1.00	1.00	1.00	1.00	1.00	1.00
Work Zone On Approach		No						No			No	
Adj Sat Flow, veh/h/ln	1870	1870	1870				0	1870	1870	1870	1870	0
Adj Flow Rate, veh/h	58	2	498				0	1009	249	141	1002	0
Peak Hour Factor	0.86	0.86	0.86				0.95	0.95	0.95	0.90	0.90	0.90
Percent Heavy Veh, %	2	2	2				0	2	2	2	2	0
Cap, veh/h	443	15	678				0	1388	593	182	2029	0
Arrive On Green	0.26	0.26	0.26				0.00	0.39	0.39	0.10	0.57	0.00
Sat Flow, veh/h	1725	59	2641				0	3647	1519	1781	3647	0
Grp Volume(v), veh/h	60	0	498				0	1009	249	141	1002	0
Grp Sat Flow(s),veh/h/ln	1784	0	1321				0	1777	1519	1781	1777	0
Q Serve(g_s), s	1.9	0.0	12.5				0.0	17.5	8.7	5.6	12.2	0.0
Cycle Q Clear(g_c), s	1.9	0.0	12.5				0.0	17.5	8.7	5.6	12.2	0.0
Prop In Lane	0.97		1.00				0.00		1.00	1.00		0.00
Lane Grp Cap(c), veh/h	458	0	678				0	1388	593	182	2029	0
V/C Ratio(X)	0.13	0.00	0.73				0.00	0.73	0.42	0.78	0.49	0.00
Avail Cap(c_a), veh/h	883	0	1308				0	2284	976	474	3509	0
HCM Platoon Ratio	1.00	1.00	1.00				1.00	1.00	1.00	1.00	1.00	1.00
Upstream Filter(I)	1.00	0.00	1.00				0.00	1.00	1.00	1.00	1.00	0.00
Uniform Delay (d), s/veh	20.7	0.0	24.7				0.0	18.8	16.1	31.8	9.3	0.0
Incr Delay (d2), s/veh	0.1	0.0	1.6				0.0	0.7	0.5	7.0	0.2	0.0
Initial Q Delay(d3),s/veh	0.0	0.0	0.0				0.0	0.0	0.0	0.0	0.0	0.0
%ile BackOfQ(50%),veh/ln	0.8	0.0	3.9				0.0	6.4	2.7	2.6	3.8	0.0
Unsig. Movement Delay, s/veh												
LnGrp Delay(d),s/veh	20.9	0.0	26.3				0.0	19.6	16.6	38.7	9.5	0.0
LnGrp LOS	C	A	C				A	B	B	D	A	A
Approach Vol, veh/h		558						1258			1143	
Approach Delay, s/veh		25.7						19.0			13.1	
Approach LOS		C						B			B	

Timer - Assigned Phs	1	2	4	6
Phs Duration (G+Y+Rc), s	13.1	34.7	24.7	47.8
Change Period (Y+Rc), s	5.7	6.4	6.1	6.4
Max Green Setting (Gmax), s	7.4	46.6	35.9	71.6
Max Q Clear Time (g_c+I1), s	7.6	19.5	14.5	14.2
Green Ext Time (p_c), s	0.2	8.8	2.5	8.5

Intersection Summary	
HCM 6th Ctrl Delay	18.0
HCM 6th LOS	B

Notes

* HCM 6th computational engine requires equal clearance times for the phases crossing the barrier.



Movement	EBL	EBT	EBR	WBL	WBT	WBR	NBL	NBT	NBR	SBL	SBT	SBR
Lane Configurations												
Traffic Volume (veh/h)	43	77	34	3	114	83	29	56	3	114	137	37
Future Volume (veh/h)	43	77	34	3	114	83	29	56	3	114	137	37
Initial Q (Qb), veh	0	0	0	0	0	0	0	0	0	0	0	0
Ped-Bike Adj(A_pbT)	1.00		0.96	1.00		0.95	1.00		0.98	1.00		0.96
Parking Bus, Adj	1.00	1.00	1.00	1.00	1.00	1.00	1.00	1.00	1.00	1.00	1.00	1.00
Work Zone On Approach		No			No			No			No	
Adj Sat Flow, veh/h/ln	1870	1870	1870	1870	1870	1870	1870	1870	1870	1870	1870	1870
Adj Flow Rate, veh/h	48	87	38	3	125	91	42	81	4	123	147	40
Peak Hour Factor	0.89	0.89	0.89	0.91	0.91	0.91	0.69	0.69	0.69	0.93	0.93	0.93
Percent Heavy Veh, %	2	2	2	2	2	2	2	2	2	2	2	2
Cap, veh/h	77	348	283	7	275	222	71	1582	689	156	1361	357
Arrive On Green	0.04	0.19	0.19	0.00	0.15	0.15	0.04	0.45	0.45	0.09	0.49	0.49
Sat Flow, veh/h	1781	1870	1523	1781	1870	1511	1781	3554	1548	1781	2760	724
Grp Volume(v), veh/h	48	87	38	3	125	91	42	81	4	123	93	94
Grp Sat Flow(s),veh/h/ln	1781	1870	1523	1781	1870	1511	1781	1777	1548	1781	1777	1707
Q Serve(g_s), s	1.9	2.8	1.5	0.1	4.3	3.8	1.6	0.9	0.1	4.7	2.0	2.1
Cycle Q Clear(g_c), s	1.9	2.8	1.5	0.1	4.3	3.8	1.6	0.9	0.1	4.7	2.0	2.1
Prop In Lane	1.00		1.00	1.00		1.00	1.00		1.00	1.00		0.42
Lane Grp Cap(c), veh/h	77	348	283	7	275	222	71	1582	689	156	876	842
V/C Ratio(X)	0.62	0.25	0.13	0.42	0.46	0.41	0.59	0.05	0.01	0.79	0.11	0.11
Avail Cap(c_a), veh/h	173	961	782	127	913	738	163	1582	689	214	876	842
HCM Platoon Ratio	1.00	1.00	1.00	1.00	1.00	1.00	1.00	1.00	1.00	1.00	1.00	1.00
Upstream Filter(I)	1.00	1.00	1.00	1.00	1.00	1.00	1.00	1.00	1.00	1.00	1.00	1.00
Uniform Delay (d), s/veh	33.0	24.3	23.8	34.8	27.3	27.1	33.1	11.0	10.8	31.3	9.5	9.5
Incr Delay (d2), s/veh	3.0	0.4	0.2	13.6	1.2	1.2	2.9	0.1	0.0	8.6	0.2	0.3
Initial Q Delay(d3),s/veh	0.0	0.0	0.0	0.0	0.0	0.0	0.0	0.0	0.0	0.0	0.0	0.0
%ile BackOfQ(50%),veh/ln	0.8	1.2	0.5	0.1	1.9	1.4	0.7	0.3	0.0	2.3	0.7	0.8
Unsig. Movement Delay, s/veh												
LnGrp Delay(d),s/veh	36.0	24.7	24.0	48.4	28.5	28.4	36.0	11.1	10.8	39.9	9.7	9.8
LnGrp LOS	D	C	C	D	C	C	D	B	B	D	A	A
Approach Vol, veh/h		173			219			127			310	
Approach Delay, s/veh		27.7			28.7			19.3			21.7	
Approach LOS		C			C			B			C	

Timer - Assigned Phs	1	2	3	4	5	6	7	8
Phs Duration (G+Y+Rc), s	7.4	39.7	7.6	15.4	10.7	36.3	4.9	18.1
Change Period (Y+Rc), s	4.6	5.1	4.6	5.1	4.6	5.1	4.6	5.1
Max Green Setting (Gmax), s	6.4	33.2	6.8	34.2	8.4	31.2	5.0	36.0
Max Q Clear Time (g_c+I1), s	3.6	4.1	3.9	6.3	6.7	2.9	2.1	4.8
Green Ext Time (p_c), s	0.0	1.5	0.0	1.0	0.0	0.6	0.0	0.6

Intersection Summary	
HCM 6th Ctrl Delay	24.4
HCM 6th LOS	C



Movement	EBL	EBT	EBR	WBL	WBT	WBR	NBL	NBT	NBR	SBL	SBT	SBR
Lane Configurations												
Traffic Volume (veh/h)	223	81	149	75	74	341	152	620	61	437	708	166
Future Volume (veh/h)	223	81	149	75	74	341	152	620	61	437	708	166
Initial Q (Qb), veh	0	0	0	0	0	0	0	0	0	0	0	0
Ped-Bike Adj(A_pbT)	1.00		0.96	1.00		0.97	1.00		0.96	1.00		0.97
Parking Bus, Adj	1.00	1.00	1.00	1.00	1.00	1.00	1.00	1.00	1.00	1.00	1.00	1.00
Work Zone On Approach		No			No			No			No	
Adj Sat Flow, veh/h/ln	1870	1870	1870	1870	1870	1870	1870	1870	1870	1870	1870	1870
Adj Flow Rate, veh/h	251	91	167	101	100	461	205	838	82	514	833	195
Peak Hour Factor	0.89	0.89	0.89	0.74	0.74	0.74	0.74	0.74	0.74	0.85	0.85	0.85
Percent Heavy Veh, %	2	2	2	2	2	2	2	2	2	2	2	2
Cap, veh/h	315	331	269	450	473	651	214	712	70	295	764	179
Arrive On Green	0.18	0.18	0.18	0.25	0.25	0.25	0.12	0.22	0.22	0.17	0.27	0.27
Sat Flow, veh/h	1781	1870	1520	1781	1870	1534	1781	3257	319	1781	2838	664
Grp Volume(v), veh/h	251	91	167	101	100	461	205	457	463	514	521	507
Grp Sat Flow(s),veh/h/ln	1781	1870	1520	1781	1870	1534	1781	1777	1799	1781	1777	1726
Q Serve(g_s), s	19.2	6.0	14.5	6.4	6.0	35.6	16.3	31.1	31.1	23.6	38.3	38.3
Cycle Q Clear(g_c), s	19.2	6.0	14.5	6.4	6.0	35.6	16.3	31.1	31.1	23.6	38.3	38.3
Prop In Lane	1.00		1.00	1.00		1.00	1.00		0.18	1.00		0.38
Lane Grp Cap(c), veh/h	315	331	269	450	473	651	214	388	393	295	478	464
V/C Ratio(X)	0.80	0.28	0.62	0.22	0.21	0.71	0.96	1.18	1.18	1.74	1.09	1.09
Avail Cap(c_a), veh/h	413	434	352	450	473	651	214	388	393	295	478	464
HCM Platoon Ratio	1.00	1.00	1.00	1.00	1.00	1.00	1.00	1.00	1.00	1.00	1.00	1.00
Upstream Filter(I)	1.00	1.00	1.00	1.00	1.00	1.00	1.00	1.00	1.00	1.00	1.00	1.00
Uniform Delay (d), s/veh	56.2	50.7	54.2	42.1	42.0	34.4	62.3	55.6	55.6	59.4	52.0	52.0
Incr Delay (d2), s/veh	9.3	0.6	3.3	0.1	0.1	3.0	49.2	103.6	103.5	347.1	68.0	68.7
Initial Q Delay(d3),s/veh	0.0	0.0	0.0	0.0	0.0	0.0	0.0	0.0	0.0	0.0	0.0	0.0
%ile BackOfQ(50%),veh/ln	9.4	2.9	5.7	2.8	2.8	13.5	10.2	24.9	25.2	39.0	25.7	25.1
Unsig. Movement Delay, s/veh												
LnGrp Delay(d),s/veh	65.5	51.3	57.5	42.2	42.1	37.4	111.5	159.3	159.1	406.4	120.1	120.7
LnGrp LOS	E	D	E	D	D	D	F	F	F	F	F	F
Approach Vol, veh/h		509			662			1125			1542	
Approach Delay, s/veh		60.3			38.9			150.5			215.8	
Approach LOS		E			D			F			F	

Timer - Assigned Phs	1	2		4	5	6		8
Phs Duration (G+Y+Rc), s	21.8	45.6		42.4	29.0	38.4		32.6
Change Period (Y+Rc), s	* 4.7	* 7.3		6.4	5.4	7.3		7.4
Max Green Setting (Gmax), s	* 17	* 38		36.0	23.6	30.9		33.0
Max Q Clear Time (g_c+I1), s	8.3	40.3		37.6	25.6	33.1		21.2
Green Ext Time (p_c), s	0.0	0.0		0.0	0.0	0.0		2.2

Intersection Summary	
HCM 6th Ctrl Delay	145.5
HCM 6th LOS	F

Notes

* HCM 6th computational engine requires equal clearance times for the phases crossing the barrier.

Intersection	
Int Delay, s/veh	0.5

Movement	EBL	EBR	NBL	NBT	SBT	SBR
Lane Configurations						
Traffic Vol, veh/h	7	165	70	435	556	7
Future Vol, veh/h	7	165	70	435	556	7
Conflicting Peds, #/hr	10	10	10	0	0	10
Sign Control	Free	Free	Free	Free	Stop	Stop
RT Channelized	-	None	-	None	-	None
Storage Length	0	-	-	-	-	-
Veh in Median Storage, #	2	-	-	0	0	-
Grade, %	0	-	-	0	0	-
Peak Hour Factor	85	85	85	85	73	73
Heavy Vehicles, %	2	2	2	2	2	2
Mvmt Flow	8	194	82	512	762	10

Major/Minor	Major1		Minor2	
Conflicting Flow All	10	0	686	20
Stage 1	-	-	10	-
Stage 2	-	-	676	-
Critical Hdwy	4.14	-	6.54	6.94
Critical Hdwy Stg 1	-	-	-	-
Critical Hdwy Stg 2	-	-	5.54	-
Follow-up Hdwy	2.22	-	4.02	3.32
Pot Cap-1 Maneuver	1608	-	~ 369	1053
Stage 1	-	-	-	-
Stage 2	-	-	~ 451	-
Platoon blocked, %		-		
Mov Cap-1 Maneuver	1593	-	0	1033
Mov Cap-2 Maneuver	-	-	0	-
Stage 1	-	-	0	-
Stage 2	-	-	0	-

Approach	NB	SB
HCM Control Delay, s	1.2	
HCM LOS		-

Minor Lane/Major Mvmt	NBL	NBT	SBLn1	SBLn2
Capacity (veh/h)	1593	-	-	1033
HCM Lane V/C Ratio	0.052	-	-	0.378
HCM Control Delay (s)	7.4	0.2	-	10.6
HCM Lane LOS	A	A	-	B
HCM 95th %tile Q(veh)	0.2	-	-	1.8

Notes			
~: Volume exceeds capacity	$: Delay exceeds 300s	+: Computation Not Defined	*: All major volume in platoon

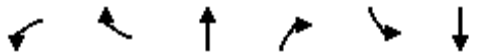

Movement	WBL	WBR	NBT	NBR	SBL	SBT
Lane Configurations						
Traffic Volume (veh/h)	114	260	377	65	242	651
Future Volume (veh/h)	114	260	377	65	242	651
Initial Q (Qb), veh	0	0	0	0	0	0
Ped-Bike Adj(A_pbT)	1.00	1.00		0.95	1.00	
Parking Bus, Adj	1.00	1.00	1.00	1.00	1.00	1.00
Work Zone On Approach	No		No			No
Adj Sat Flow, veh/h/ln	1870	1870	1870	1870	1870	1870
Adj Flow Rate, veh/h	211	481	410	71	260	700
Peak Hour Factor	0.54	0.54	0.92	0.92	0.93	0.93
Percent Heavy Veh, %	2	2	2	2	2	2
Cap, veh/h	603	536	846	145	300	941
Arrive On Green	0.34	0.34	0.28	0.28	0.17	0.50
Sat Flow, veh/h	1781	1585	3100	515	1781	1870
Grp Volume(v), veh/h	211	481	241	240	260	700
Grp Sat Flow(s),veh/h/ln	1781	1585	1777	1745	1781	1870
Q Serve(g_s), s	7.8	25.4	9.9	10.1	12.5	26.2
Cycle Q Clear(g_c), s	7.8	25.4	9.9	10.1	12.5	26.2
Prop In Lane	1.00	1.00		0.30	1.00	
Lane Grp Cap(c), veh/h	603	536	500	491	300	941
V/C Ratio(X)	0.35	0.90	0.48	0.49	0.87	0.74
Avail Cap(c_a), veh/h	1086	967	810	795	753	1772
HCM Platoon Ratio	1.00	1.00	1.00	1.00	1.00	1.00
Upstream Filter(I)	1.00	1.00	1.00	1.00	1.00	1.00
Uniform Delay (d), s/veh	21.9	27.7	26.3	26.4	35.7	17.4
Incr Delay (d2), s/veh	0.3	5.6	2.6	2.7	3.0	4.2
Initial Q Delay(d3),s/veh	0.0	0.0	0.0	0.0	0.0	0.0
%ile BackOfQ(50%),veh/ln	3.1	0.8	4.3	4.3	5.4	11.0
Unsig. Movement Delay, s/veh						
LnGrp Delay(d),s/veh	22.3	33.4	28.9	29.1	38.7	21.6
LnGrp LOS	C	C	C	C	D	C
Approach Vol, veh/h	692		481			960
Approach Delay, s/veh	30.0		29.0			26.3
Approach LOS	C		C			C

Timer - Assigned Phs		2		4	5	6
Phs Duration (G+Y+Rc), s		52.2		36.0	19.6	32.6
Change Period (Y+Rc), s		* 7.8		6.2	* 4.7	7.8
Max Green Setting (Gmax), s		* 84		53.8	* 37	40.2
Max Q Clear Time (g_c+I1), s		28.2		27.4	14.5	12.1
Green Ext Time (p_c), s		16.2		2.4	0.3	7.1

Intersection Summary	
HCM 6th Ctrl Delay	28.1
HCM 6th LOS	C

Notes

* HCM 6th computational engine requires equal clearance times for the phases crossing the barrier.

Intersection	
Int Delay, s/veh	3

Movement	EBT	EBR	WBL	WBT	NBL	NBR
Lane Configurations						
Traffic Vol, veh/h	343	77	83	230	37	65
Future Vol, veh/h	343	77	83	230	37	65
Conflicting Peds, #/hr	0	10	10	0	10	10
Sign Control	Free	Free	Free	Free	Stop	Stop
RT Channelized	-	None	-	None	-	None
Storage Length	-	-	-	-	0	-
Veh in Median Storage, #	0	-	-	0	0	-
Grade, %	0	-	-	0	0	-
Peak Hour Factor	67	67	91	91	86	86
Heavy Vehicles, %	2	2	2	2	2	2
Mvmt Flow	512	115	91	253	43	76

Major/Minor	Major1		Major2		Minor1	
Conflicting Flow All	0	0	637	0	1025	590
Stage 1	-	-	-	-	580	-
Stage 2	-	-	-	-	445	-
Critical Hdwy	-	-	4.12	-	6.42	6.22
Critical Hdwy Stg 1	-	-	-	-	5.42	-
Critical Hdwy Stg 2	-	-	-	-	5.42	-
Follow-up Hdwy	-	-	2.218	-	3.518	3.318
Pot Cap-1 Maneuver	-	-	947	-	260	508
Stage 1	-	-	-	-	560	-
Stage 2	-	-	-	-	646	-
Platoon blocked, %	-	-		-		
Mov Cap-1 Maneuver	-	-	938	-	226	498
Mov Cap-2 Maneuver	-	-	-	-	226	-
Stage 1	-	-	-	-	554	-
Stage 2	-	-	-	-	568	-

Approach	EB	WB	NB
HCM Control Delay, s	0	2.5	20.7
HCM LOS			C

Minor Lane/Major Mvmt	NBLn1	EBT	EBR	WBL	WBT
Capacity (veh/h)	347	-	-	938	-
HCM Lane V/C Ratio	0.342	-	-	0.097	-
HCM Control Delay (s)	20.7	-	-	9.3	0
HCM Lane LOS	C	-	-	A	A
HCM 95th %tile Q(veh)	1.5	-	-	0.3	-

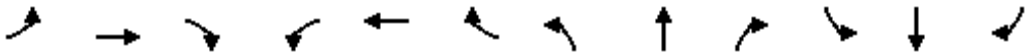

Movement	EBL	EBT	EBR	WBL	WBT	WBR	NBL	NBT	NBR	SBL	SBT	SBR
Lane Configurations												
Traffic Volume (veh/h)	111	204	91	43	111	198	101	458	37	290	598	100
Future Volume (veh/h)	111	204	91	43	111	198	101	458	37	290	598	100
Initial Q (Qb), veh	0	0	0	0	0	0	0	0	0	0	0	0
Ped-Bike Adj(A_pbT)	1.00		0.97	1.00		1.00	1.00		0.97	1.00		0.97
Parking Bus, Adj	1.00	1.00	1.00	1.00	1.00	1.00	1.00	1.00	1.00	1.00	1.00	1.00
Work Zone On Approach		No			No			No			No	
Adj Sat Flow, veh/h/ln	1870	1870	1870	1870	1870	1870	1870	1870	1870	1870	1870	1870
Adj Flow Rate, veh/h	163	300	134	48	123	0	103	467	38	309	636	106
Peak Hour Factor	0.68	0.68	0.68	0.90	0.90	0.90	0.98	0.98	0.98	0.94	0.94	0.94
Percent Heavy Veh, %	2	2	2	2	2	2	2	2	2	2	2	2
Cap, veh/h	207	585	254	76	610		135	813	350	367	1090	181
Arrive On Green	0.12	0.25	0.25	0.04	0.17	0.00	0.08	0.23	0.23	0.21	0.36	0.36
Sat Flow, veh/h	1781	2384	1035	1781	3554	1585	1781	3554	1531	1781	3035	505
Grp Volume(v), veh/h	163	221	213	48	123	0	103	467	38	309	372	370
Grp Sat Flow(s),veh/h/ln	1781	1777	1643	1781	1777	1585	1781	1777	1531	1781	1777	1763
Q Serve(g_s), s	6.5	7.8	8.1	1.9	2.2	0.0	4.1	8.5	1.4	12.1	12.3	12.4
Cycle Q Clear(g_c), s	6.5	7.8	8.1	1.9	2.2	0.0	4.1	8.5	1.4	12.1	12.3	12.4
Prop In Lane	1.00		0.63	1.00		1.00	1.00		1.00	1.00		0.29
Lane Grp Cap(c), veh/h	207	436	403	76	610		135	813	350	367	638	633
V/C Ratio(X)	0.79	0.51	0.53	0.63	0.20		0.76	0.57	0.11	0.84	0.58	0.58
Avail Cap(c_a), veh/h	501	1075	994	255	1661		427	1724	743	992	1426	1415
HCM Platoon Ratio	1.00	1.00	1.00	1.00	1.00	1.00	1.00	1.00	1.00	1.00	1.00	1.00
Upstream Filter(I)	1.00	1.00	1.00	1.00	1.00	0.00	1.00	1.00	1.00	1.00	1.00	1.00
Uniform Delay (d), s/veh	31.2	23.6	23.7	34.2	25.8	0.0	32.9	24.8	22.1	27.7	18.8	18.8
Incr Delay (d2), s/veh	6.5	0.9	1.1	8.3	0.2	0.0	8.7	0.6	0.1	5.3	0.8	0.9
Initial Q Delay(d3),s/veh	0.0	0.0	0.0	0.0	0.0	0.0	0.0	0.0	0.0	0.0	0.0	0.0
%ile BackOfQ(50%),veh/ln	3.0	3.1	3.0	1.0	0.9	0.0	2.0	3.3	0.5	5.3	4.6	4.6
Unsig. Movement Delay, s/veh												
LnGrp Delay(d),s/veh	37.7	24.5	24.8	42.5	25.9	0.0	41.6	25.5	22.3	32.9	19.7	19.7
LnGrp LOS	D	C	C	D	C		D	C	C	C	B	B
Approach Vol, veh/h		597			171	A		608			1051	
Approach Delay, s/veh		28.2			30.6			28.0			23.6	
Approach LOS		C			C			C			C	

Timer - Assigned Phs	1	2	3	4	5	6	7	8
Phs Duration (G+Y+Rc), s	19.5	22.4	7.7	22.9	10.1	31.9	13.0	17.6
Change Period (Y+Rc), s	4.6	5.8	4.6	5.1	4.6	5.8	4.6	5.1
Max Green Setting (Gmax), s	40.4	35.2	10.4	43.9	17.4	58.2	20.4	33.9
Max Q Clear Time (g_c+I1), s	14.1	10.5	3.9	10.1	6.1	14.4	8.5	4.2
Green Ext Time (p_c), s	0.9	3.1	0.0	2.6	0.2	4.9	0.3	0.7

Intersection Summary	
HCM 6th Ctrl Delay	26.3
HCM 6th LOS	C

Notes

Unsignalized Delay for [WBR] is excluded from calculations of the approach delay and intersection delay.

Intersection	
Intersection Delay, s/veh	11.3
Intersection LOS	B

Movement	EBL	EBT	EBR	WBL	WBT	WBR	NBL	NBT	NBR	SBL	SBT	SBR
Lane Configurations												
Traffic Vol, veh/h	38	121	8	12	105	49	9	39	40	41	33	36
Future Vol, veh/h	38	121	8	12	105	49	9	39	40	41	33	36
Peak Hour Factor	0.74	0.74	0.74	0.79	0.79	0.79	0.45	0.45	0.45	0.87	0.87	0.87
Heavy Vehicles, %	2	2	2	2	2	2	2	2	2	2	2	2
Mvmt Flow	51	164	11	15	133	62	20	87	89	47	38	41
Number of Lanes	0	1	1	0	1	0	0	1	0	0	1	1

Approach	EB	WB	NB	SB
Opposing Approach	WB	EB	SB	NB
Opposing Lanes	1	2	2	1
Conflicting Approach Left	SB	NB	EB	WB
Conflicting Lanes Left	2	1	2	1
Conflicting Approach Right	NB	SB	WB	EB
Conflicting Lanes Right	1	2	1	2
HCM Control Delay	11.6	11.6	11.5	9.7
HCM LOS	B	B	B	A

Lane	NBLn1	EBLn1	EBLn2	WBLn1	SBLn1	SBLn2
Vol Left, %	10%	24%	0%	7%	55%	0%
Vol Thru, %	44%	76%	0%	63%	45%	0%
Vol Right, %	45%	0%	100%	30%	0%	100%
Sign Control	Stop	Stop	Stop	Stop	Stop	Stop
Traffic Vol by Lane	88	159	8	166	74	36
LT Vol	9	38	0	12	41	0
Through Vol	39	121	0	105	33	0
RT Vol	40	0	8	49	0	36
Lane Flow Rate	196	215	11	210	85	41
Geometry Grp	6	7	7	6	7	7
Degree of Util (X)	0.314	0.353	0.015	0.334	0.151	0.062
Departure Headway (Hd)	5.786	5.909	5.08	5.719	6.395	5.404
Convergence, Y/N	Yes	Yes	Yes	Yes	Yes	Yes
Cap	622	610	705	628	561	662
Service Time	3.82	3.638	2.809	3.75	4.134	3.143
HCM Lane V/C Ratio	0.315	0.352	0.016	0.334	0.152	0.062
HCM Control Delay	11.5	11.8	7.9	11.6	10.3	8.5
HCM Lane LOS	B	B	A	B	B	A
HCM 95th-tile Q	1.3	1.6	0	1.5	0.5	0.2

Intersection	
Intersection Delay, s/veh	13.5
Intersection LOS	B

Movement	EBL	EBT	EBR	WBL	WBT	WBR	NBL	NBT	NBR	SBL	SBT	SBR
Lane Configurations												
Traffic Vol, veh/h	4	130	23	2	111	142	21	74	1	98	121	8
Future Vol, veh/h	4	130	23	2	111	142	21	74	1	98	121	8
Peak Hour Factor	0.68	0.68	0.68	0.66	0.66	0.66	0.70	0.70	0.70	0.84	0.84	0.84
Heavy Vehicles, %	2	2	2	2	2	2	2	2	2	2	2	2
Mvmt Flow	6	191	34	3	168	215	30	106	1	117	144	10
Number of Lanes	0	1	0	0	1	0	0	1	0	0	1	0

Approach	EB	WB	NB	SB
Opposing Approach	WB	EB	SB	NB
Opposing Lanes	1	1	1	1
Conflicting Approach Left	SB	NB	EB	WB
Conflicting Lanes Left	1	1	1	1
Conflicting Approach Right	NB	SB	WB	EB
Conflicting Lanes Right	1	1	1	1
HCM Control Delay	12.1	14.9	11.2	13.8
HCM LOS	B	B	B	B

Lane	NBLn1	EBLn1	WBLn1	SBLn1
Vol Left, %	22%	3%	1%	43%
Vol Thru, %	77%	83%	44%	53%
Vol Right, %	1%	15%	56%	4%
Sign Control	Stop	Stop	Stop	Stop
Traffic Vol by Lane	96	157	255	227
LT Vol	21	4	2	98
Through Vol	74	130	111	121
RT Vol	1	23	142	8
Lane Flow Rate	137	231	386	270
Geometry Grp	1	1	1	1
Degree of Util (X)	0.236	0.367	0.563	0.446
Departure Headway (Hd)	6.204	5.727	5.245	5.945
Convergence, Y/N	Yes	Yes	Yes	Yes
Cap	575	623	684	603
Service Time	4.294	3.808	3.313	4.02
HCM Lane V/C Ratio	0.238	0.371	0.564	0.448
HCM Control Delay	11.2	12.1	14.9	13.8
HCM Lane LOS	B	B	B	B
HCM 95th-tile Q	0.9	1.7	3.5	2.3

Intersection	
Intersection Delay, s/veh	23.5
Intersection LOS	C

Movement	EBL	EBT	EBR	WBL	WBT	WBR	NBL	NBT	NBR	SBL	SBT	SBR
Lane Configurations												
Traffic Vol, veh/h	84	249	13	19	164	84	36	117	53	156	174	55
Future Vol, veh/h	84	249	13	19	164	84	36	117	53	156	174	55
Peak Hour Factor	0.86	0.86	0.86	0.86	0.86	0.86	0.65	0.65	0.65	0.85	0.85	0.85
Heavy Vehicles, %	2	2	2	2	2	2	2	2	2	2	2	2
Mvmt Flow	98	290	15	22	191	98	55	180	82	184	205	65
Number of Lanes	1	1	0	0	1	0	1	1	0	1	1	0

Approach	EB	WB	NB	SB
Opposing Approach	WB	EB	SB	NB
Opposing Lanes	1	2	2	2
Conflicting Approach Left	SB	NB	EB	WB
Conflicting Lanes Left	2	2	2	1
Conflicting Approach Right	NB	SB	WB	EB
Conflicting Lanes Right	2	2	1	2
HCM Control Delay	24.2	29.3	21	20.6
HCM LOS	C	D	C	C

Lane	NBLn1	NBLn2	EBLn1	EBLn2	WBLn1	SBLn1	SBLn2
Vol Left, %	100%	0%	100%	0%	7%	100%	0%
Vol Thru, %	0%	69%	0%	95%	61%	0%	76%
Vol Right, %	0%	31%	0%	5%	31%	0%	24%
Sign Control	Stop	Stop	Stop	Stop	Stop	Stop	Stop
Traffic Vol by Lane	36	170	84	262	267	156	229
LT Vol	36	0	84	0	19	156	0
Through Vol	0	117	0	249	164	0	174
RT Vol	0	53	0	13	84	0	55
Lane Flow Rate	55	262	98	305	310	184	269
Geometry Grp	7	7	7	7	6	7	7
Degree of Util (X)	0.138	0.598	0.237	0.691	0.712	0.444	0.6
Departure Headway (Hd)	8.973	8.226	8.72	8.167	8.253	8.716	8.023
Convergence, Y/N	Yes	Yes	Yes	Yes	Yes	Yes	Yes
Cap	400	439	412	442	438	413	450
Service Time	6.726	5.979	6.471	5.918	6.305	6.471	5.777
HCM Lane V/C Ratio	0.138	0.597	0.238	0.69	0.708	0.446	0.598
HCM Control Delay	13.2	22.6	14.2	27.4	29.3	18.3	22.2
HCM Lane LOS	B	C	B	D	D	C	C
HCM 95th-tile Q	0.5	3.8	0.9	5.1	5.5	2.2	3.8



Movement	EBL	EBT	EBR	WBL	WBT	WBR	NBL	NBT	NBR	SBL	SBT	SBR
Lane Configurations												
Traffic Volume (veh/h)	37	294	125	1	156	121	73	172	3	182	393	41
Future Volume (veh/h)	37	294	125	1	156	121	73	172	3	182	393	41
Initial Q (Qb), veh	0	0	0	0	0	0	0	0	0	0	0	0
Ped-Bike Adj(A_pbT)	0.99		0.96	1.00		0.96	1.00		0.95	1.00		0.95
Parking Bus, Adj	1.00	1.00	1.00	1.00	1.00	1.00	1.00	1.00	1.00	1.00	1.00	1.00
Work Zone On Approach		No			No			No			No	
Adj Sat Flow, veh/h/ln	1870	1870	1870	1870	1870	1870	1870	1870	1870	1870	1870	1870
Adj Flow Rate, veh/h	50	397	155	1	164	127	86	202	4	209	452	47
Peak Hour Factor	0.74	0.74	0.74	0.95	0.95	0.95	0.85	0.85	0.85	0.87	0.87	0.87
Percent Heavy Veh, %	2	2	2	2	2	2	2	2	2	2	2	2
Cap, veh/h	80	468	176	38	385	297	118	454	9	244	530	55
Arrive On Green	0.40	0.40	0.40	0.40	0.40	0.40	0.07	0.25	0.25	0.14	0.32	0.32
Sat Flow, veh/h	96	1166	438	1	959	739	1781	1825	36	1781	1657	172
Grp Volume(v), veh/h	602	0	0	292	0	0	86	0	206	209	0	499
Grp Sat Flow(s),veh/h/ln	1699	0	0	1699	0	0	1781	0	1861	1781	0	1829
Q Serve(g_s), s	19.1	0.0	0.0	0.0	0.0	0.0	4.5	0.0	8.9	10.9	0.0	24.2
Cycle Q Clear(g_c), s	30.9	0.0	0.0	11.7	0.0	0.0	4.5	0.0	8.9	10.9	0.0	24.2
Prop In Lane	0.08		0.26	0.00		0.43	1.00		0.02	1.00		0.09
Lane Grp Cap(c), veh/h	724	0	0	721	0	0	118	0	463	244	0	585
V/C Ratio(X)	0.83	0.00	0.00	0.41	0.00	0.00	0.73	0.00	0.44	0.86	0.00	0.85
Avail Cap(c_a), veh/h	1579	0	0	1587	0	0	175	0	463	401	0	659
HCM Platoon Ratio	1.00	1.00	1.00	1.00	1.00	1.00	1.00	1.00	1.00	1.00	1.00	1.00
Upstream Filter(I)	1.00	0.00	0.00	1.00	0.00	0.00	1.00	0.00	1.00	1.00	0.00	1.00
Uniform Delay (d), s/veh	26.0	0.0	0.0	20.5	0.0	0.0	43.4	0.0	30.0	39.9	0.0	30.1
Incr Delay (d2), s/veh	2.6	0.0	0.0	0.4	0.0	0.0	3.2	0.0	3.1	4.9	0.0	14.6
Initial Q Delay(d3),s/veh	0.0	0.0	0.0	0.0	0.0	0.0	0.0	0.0	0.0	0.0	0.0	0.0
%ile BackOfQ(50%),veh/ln	12.4	0.0	0.0	4.6	0.0	0.0	2.0	0.0	4.2	4.9	0.0	12.4
Unsig. Movement Delay, s/veh												
LnGrp Delay(d),s/veh	28.6	0.0	0.0	20.8	0.0	0.0	46.6	0.0	33.1	44.8	0.0	44.8
LnGrp LOS	C	A	A	C	A	A	D	A	C	D	A	D
Approach Vol, veh/h		602			292			292			708	
Approach Delay, s/veh		28.6			20.8			37.1			44.8	
Approach LOS		C			C			D			D	

Timer - Assigned Phs	1	2		4	5	6		8
Phs Duration (G+Y+Rc), s	11.0	38.2		45.5	17.7	31.5		45.5
Change Period (Y+Rc), s	* 4.7	7.9		7.5	* 4.7	* 7.9		7.5
Max Green Setting (Gmax), s	* 9.3	34.1		86.5	* 21	* 23		86.5
Max Q Clear Time (g_c+I1), s	10.5	26.2		13.7	12.9	10.9		32.9
Green Ext Time (p_c), s	0.0	4.1		2.1	0.2	2.1		5.2

Intersection Summary		
HCM 6th Ctrl Delay		34.7
HCM 6th LOS		C

Notes

* HCM 6th computational engine requires equal clearance times for the phases crossing the barrier.

Intersection	
Int Delay, s/veh	59.5

Movement	EBL	EBT	EBR	WBL	WBT	WBR	NBL	NBT	NBR	SBL	SBT	SBR
Lane Configurations		↕			↕			↕			↕	
Traffic Vol, veh/h	15	306	159	101	177	37	98	41	62	60	67	11
Future Vol, veh/h	15	306	159	101	177	37	98	41	62	60	67	11
Conflicting Peds, #/hr	10	0	10	10	0	10	10	0	10	10	0	10
Sign Control	Free	Free	Free	Free	Free	Free	Stop	Stop	Stop	Stop	Stop	Stop
RT Channelized	-	-	None	-	-	None	-	-	None	-	-	None
Storage Length	-	-	-	-	-	-	-	-	-	-	-	-
Veh in Median Storage, #	-	0	-	-	0	-	-	0	-	-	0	-
Grade, %	-	0	-	-	0	-	-	0	-	-	0	-
Peak Hour Factor	82	82	82	95	95	95	92	92	92	68	68	68
Heavy Vehicles, %	2	2	2	2	2	2	2	2	2	2	2	2
Mvmt Flow	18	373	194	106	186	39	107	45	67	88	99	16

Major/Minor	Major1			Major2			Minor1			Minor2		
Conflicting Flow All	235	0	0	577	0	0	1001	963	490	1000	1041	226
Stage 1	-	-	-	-	-	-	516	516	-	428	428	-
Stage 2	-	-	-	-	-	-	485	447	-	572	613	-
Critical Hdwy	4.12	-	-	4.12	-	-	7.12	6.52	6.22	7.12	6.52	6.22
Critical Hdwy Stg 1	-	-	-	-	-	-	6.12	5.52	-	6.12	5.52	-
Critical Hdwy Stg 2	-	-	-	-	-	-	6.12	5.52	-	6.12	5.52	-
Follow-up Hdwy	2.218	-	-	2.218	-	-	3.518	4.018	3.318	3.518	4.018	3.318
Pot Cap-1 Maneuver	1332	-	-	996	-	-	222	256	578	222	230	813
Stage 1	-	-	-	-	-	-	542	534	-	605	585	-
Stage 2	-	-	-	-	-	-	563	573	-	505	483	-
Platoon blocked, %		-	-		-	-						
Mov Cap-1 Maneuver	1319	-	-	987	-	-	115	215	567	144	193	798
Mov Cap-2 Maneuver	-	-	-	-	-	-	115	215	-	144	193	-
Stage 1	-	-	-	-	-	-	526	517	-	587	508	-
Stage 2	-	-	-	-	-	-	386	497	-	394	468	-

Approach	EB	WB	NB	SB
HCM Control Delay, s	0.2	2.9	205.7	165.9
HCM LOS			F	F

Minor Lane/Major Mvmt	NBLn1	EBL	EBT	EBR	WBL	WBT	WBR	SBLn1
Capacity (veh/h)	174	1319	-	-	987	-	-	177
HCM Lane V/C Ratio	1.256	0.014	-	-	0.108	-	-	1.147
HCM Control Delay (s)	205.7	7.8	0	-	9.1	0	-	165.9
HCM Lane LOS	F	A	A	-	A	A	-	F
HCM 95th %tile Q(veh)	12.2	0	-	-	0.4	-	-	10.5

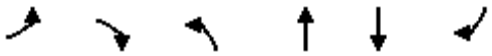

Movement	EBL	EBR	NBL	NBT	SBT	SBR
Lane Configurations						
Traffic Volume (veh/h)	146	286	150	462	633	154
Future Volume (veh/h)	146	286	150	462	633	154
Initial Q (Qb), veh	0	0	0	0	0	0
Ped-Bike Adj(A_pbT)	1.00	1.00	1.00			0.96
Parking Bus, Adj	1.00	1.00	1.00	1.00	1.00	1.00
Work Zone On Approach	No			No	No	
Adj Sat Flow, veh/h/ln	1870	1870	1870	1870	1870	1870
Adj Flow Rate, veh/h	187	367	161	497	681	166
Peak Hour Factor	0.78	0.78	0.93	0.93	0.93	0.93
Percent Heavy Veh, %	2	2	2	2	2	2
Cap, veh/h	371	507	199	1267	755	184
Arrive On Green	0.21	0.21	0.11	0.68	0.52	0.52
Sat Flow, veh/h	1781	1585	1781	1870	1440	351
Grp Volume(v), veh/h	187	367	161	497	0	847
Grp Sat Flow(s),veh/h/ln	1781	1585	1781	1870	0	1792
Q Serve(g_s), s	8.9	19.7	8.5	11.2	0.0	41.0
Cycle Q Clear(g_c), s	8.9	19.7	8.5	11.2	0.0	41.0
Prop In Lane	1.00	1.00	1.00			0.20
Lane Grp Cap(c), veh/h	371	507	199	1267	0	939
V/C Ratio(X)	0.50	0.72	0.81	0.39	0.00	0.90
Avail Cap(c_a), veh/h	371	507	630	2315	0	1509
HCM Platoon Ratio	1.00	1.00	1.00	1.00	1.00	1.00
Upstream Filter(I)	1.00	1.00	1.00	1.00	0.00	1.00
Uniform Delay (d), s/veh	33.7	28.9	41.7	6.8	0.0	20.6
Incr Delay (d2), s/veh	1.1	5.1	7.6	0.2	0.0	4.9
Initial Q Delay(d3),s/veh	0.0	0.0	0.0	0.0	0.0	0.0
%ile BackOfQ(50%),veh/ln	3.9	0.7	4.0	3.6	0.0	16.3
Unsig. Movement Delay, s/veh						
LnGrp Delay(d),s/veh	34.8	34.0	49.3	7.0	0.0	25.6
LnGrp LOS	C	C	D	A	A	C
Approach Vol, veh/h	554			658	847	
Approach Delay, s/veh	34.3			17.4	25.6	
Approach LOS	C			B	C	

Timer - Assigned Phs		2		4	5	6
Phs Duration (G+Y+Rc), s		71.1		25.0	14.7	56.4
Change Period (Y+Rc), s		6.0		5.0	4.0	6.0
Max Green Setting (Gmax), s		119.0		20.0	34.0	81.0
Max Q Clear Time (g_c+I1), s		13.2		21.7	10.5	43.0
Green Ext Time (p_c), s		3.3		0.0	0.4	7.4

Intersection Summary		
HCM 6th Ctrl Delay		25.3
HCM 6th LOS		C



Movement	WBL	WBR	NBT	NBR	SBL	SBT	
Lane Configurations							
Traffic Volume (veh/h)	135	50	514	92	41	651	
Future Volume (veh/h)	135	50	514	92	41	651	
Initial Q (Qb), veh	0	0	0	0	0	0	
Ped-Bike Adj(A_pbT)	1.00	1.00		0.96	1.00		
Parking Bus, Adj	1.00	1.00	1.00	1.00	1.00	1.00	
Work Zone On Approach	No		No			No	
Adj Sat Flow, veh/h/ln	1870	1870	1870	1870	1870	1870	
Adj Flow Rate, veh/h	163	60	565	101	43	685	
Peak Hour Factor	0.83	0.83	0.91	0.91	0.95	0.95	
Percent Heavy Veh, %	2	2	2	2	2	2	
Cap, veh/h	238	286	725	130	83	1144	
Arrive On Green	0.13	0.13	0.47	0.47	0.05	0.61	
Sat Flow, veh/h	1781	1585	1534	274	1781	1870	
Grp Volume(v), veh/h	163	60	0	666	43	685	
Grp Sat Flow(s),veh/h/ln	1781	1585	0	1808	1781	1870	
Q Serve(g_s), s	3.8	1.4	0.0	13.3	1.0	9.7	
Cycle Q Clear(g_c), s	3.8	1.4	0.0	13.3	1.0	9.7	
Prop In Lane	1.00	1.00		0.15	1.00		
Lane Grp Cap(c), veh/h	238	286	0	855	83	1144	
V/C Ratio(X)	0.69	0.21	0.00	0.78	0.52	0.60	
Avail Cap(c_a), veh/h	618	624	0	4268	742	5367	
HCM Platoon Ratio	1.00	1.00	1.00	1.00	1.00	1.00	
Upstream Filter(I)	1.00	1.00	0.00	1.00	1.00	1.00	
Uniform Delay (d), s/veh	17.9	15.1	0.0	9.5	20.1	5.1	
Incr Delay (d2), s/veh	3.5	0.4	0.0	1.6	4.9	0.5	
Initial Q Delay(d3),s/veh	0.0	0.0	0.0	0.0	0.0	0.0	
%ile BackOfQ(50%),veh/ln	1.6	0.5	0.0	3.5	0.5	1.6	
Unsig. Movement Delay, s/veh							
LnGrp Delay(d),s/veh	21.3	15.5	0.0	11.1	25.0	5.6	
LnGrp LOS	C	B	A	B	C	A	
Approach Vol, veh/h	223		666			728	
Approach Delay, s/veh	19.7		11.1			6.8	
Approach LOS	B		B			A	

Timer - Assigned Phs	1	2				6	8
Phs Duration (G+Y+Rc), s	6.0	26.4				32.4	10.8
Change Period (Y+Rc), s	4.0	6.0				6.0	5.0
Max Green Setting (Gmax), s	18.0	102.0				124.0	15.0
Max Q Clear Time (g_c+I1), s	3.0	15.3				11.7	5.8
Green Ext Time (p_c), s	0.1	5.1				5.2	0.4

Intersection Summary		
HCM 6th Ctrl Delay	10.3	
HCM 6th LOS	B	



Movement	EBL	EBT	EBR	WBL	WBT	WBR	NBL	NBT	NBR	SBL	SBT	SBR
Lane Configurations												
Traffic Volume (veh/h)	13	119	11	35	145	157	19	6	9	244	26	19
Future Volume (veh/h)	13	119	11	35	145	157	19	6	9	244	26	19
Initial Q (Qb), veh	0	0	0	0	0	0	0	0	0	0	0	0
Ped-Bike Adj(A_pbT)	1.00		0.91	1.00		0.92	0.99		0.98	1.00		0.96
Parking Bus, Adj	1.00	1.00	1.00	1.00	1.00	1.00	1.00	1.00	1.00	1.00	1.00	1.00
Work Zone On Approach		No			No			No			No	
Adj Sat Flow, veh/h/ln	1870	1870	1870	1870	1870	1870	1870	1870	1870	1870	1870	1870
Adj Flow Rate, veh/h	15	135	12	38	156	169	36	11	17	271	29	21
Peak Hour Factor	0.88	0.88	0.88	0.93	0.93	0.93	0.53	0.53	0.53	0.90	0.90	0.90
Percent Heavy Veh, %	2	2	2	2	2	2	2	2	2	2	2	2
Cap, veh/h	20	184	16	53	219	214	509	158	223	855	565	409
Arrive On Green	0.12	0.12	0.12	0.15	0.15	0.15	0.57	0.57	0.57	0.57	0.57	0.57
Sat Flow, veh/h	169	1518	135	363	1489	1462	805	278	392	1376	992	718
Grp Volume(v), veh/h	162	0	0	194	0	169	64	0	0	271	0	50
Grp Sat Flow(s),veh/h/ln	1822	0	0	1852	0	1462	1475	0	0	1376	0	1710
Q Serve(g_s), s	9.5	0.0	0.0	11.0	0.0	12.3	0.3	0.0	0.0	9.2	0.0	1.4
Cycle Q Clear(g_c), s	9.5	0.0	0.0	11.0	0.0	12.3	1.8	0.0	0.0	11.0	0.0	1.4
Prop In Lane	0.09		0.07	0.20		1.00	0.56		0.27	1.00		0.42
Lane Grp Cap(c), veh/h	221	0	0	272	0	214	891	0	0	855	0	974
V/C Ratio(X)	0.73	0.00	0.00	0.71	0.00	0.79	0.07	0.00	0.00	0.32	0.00	0.05
Avail Cap(c_a), veh/h	560	0	0	586	0	462	891	0	0	855	0	974
HCM Platoon Ratio	1.00	1.00	1.00	1.00	1.00	1.00	1.00	1.00	1.00	1.00	1.00	1.00
Upstream Filter(I)	1.00	0.00	0.00	1.00	0.00	1.00	1.00	0.00	0.00	1.00	0.00	1.00
Uniform Delay (d), s/veh	46.9	0.0	0.0	45.0	0.0	45.5	10.6	0.0	0.0	12.5	0.0	10.6
Incr Delay (d2), s/veh	1.8	0.0	0.0	1.3	0.0	2.4	0.2	0.0	0.0	1.0	0.0	0.1
Initial Q Delay(d3),s/veh	0.0	0.0	0.0	0.0	0.0	0.0	0.0	0.0	0.0	0.0	0.0	0.0
%ile BackOfQ(50%),veh/ln	4.4	0.0	0.0	5.1	0.0	4.5	0.7	0.0	0.0	3.7	0.0	0.6
Unsig. Movement Delay, s/veh												
LnGrp Delay(d),s/veh	48.7	0.0	0.0	46.3	0.0	48.0	10.8	0.0	0.0	13.5	0.0	10.7
LnGrp LOS	D	A	A	D	A	D	B	A	A	B	A	B
Approach Vol, veh/h		162			363			64			321	
Approach Delay, s/veh		48.7			47.1			10.8			13.1	
Approach LOS		D			D			B			B	

Timer - Assigned Phs	2	4	6	8
Phs Duration (G+Y+Rc), s	69.0	19.4	69.0	22.2
Change Period (Y+Rc), s	6.0	6.0	6.0	6.0
Max Green Setting (Gmax), s	63.0	34.0	63.0	35.0
Max Q Clear Time (g_c+I1), s	3.8	11.5	13.0	14.3
Green Ext Time (p_c), s	0.1	0.5	2.9	0.9

Intersection Summary	
HCM 6th Ctrl Delay	32.8
HCM 6th LOS	C



Movement	EBL	EBT	EBR	WBL	WBT	WBR	NBL	NBT	NBR	SBL	SBT	SBR
Lane Configurations												
Traffic Volume (veh/h)	48	51	279	5	42	14	201	1071	6	51	1599	93
Future Volume (veh/h)	48	51	279	5	42	14	201	1071	6	51	1599	93
Initial Q (Qb), veh	0	0	0	0	0	0	0	0	0	0	0	0
Ped-Bike Adj(A_pbT)	1.00		0.94	1.00		0.96	1.00		1.00	1.00		0.98
Parking Bus, Adj	1.00	1.00	1.00	1.00	1.00	1.00	1.00	1.00	1.00	1.00	1.00	1.00
Work Zone On Approach		No			No			No			No	
Adj Sat Flow, veh/h/ln	1870	1870	1870	1870	1870	1870	1870	1870	1870	1870	1870	1870
Adj Flow Rate, veh/h	51	54	297	6	53	18	216	1152	0	54	1667	99
Peak Hour Factor	0.94	0.94	0.94	0.79	0.79	0.79	0.93	0.93	0.93	0.94	0.94	0.94
Percent Heavy Veh, %	2	2	2	2	2	2	2	2	2	2	2	2
Cap, veh/h	120	411	804	27	313	254	281	1686	0	122	1641	821
Arrive On Green	0.07	0.22	0.22	0.02	0.17	0.17	0.08	0.47	0.00	0.07	0.46	0.46
Sat Flow, veh/h	1781	1870	2626	1781	1870	1518	3456	3647	0	1781	3554	1548
Grp Volume(v), veh/h	51	54	297	6	53	18	216	1152	0	54	1667	99
Grp Sat Flow(s),veh/h/ln	1781	1870	1313	1781	1870	1518	1728	1777	0	1781	1777	1548
Q Serve(g_s), s	3.4	2.8	10.9	0.4	3.0	1.2	7.5	31.0	0.0	3.6	56.7	4.0
Cycle Q Clear(g_c), s	3.4	2.8	10.9	0.4	3.0	1.2	7.5	31.0	0.0	3.6	56.7	4.0
Prop In Lane	1.00		1.00	1.00		1.00	1.00		0.00	1.00		1.00
Lane Grp Cap(c), veh/h	120	411	804	27	313	254	281	1686	0	122	1641	821
V/C Ratio(X)	0.43	0.13	0.37	0.22	0.17	0.07	0.77	0.68	0.00	0.44	1.02	0.12
Avail Cap(c_a), veh/h	145	701	1210	145	701	568	281	1686	0	145	1641	821
HCM Platoon Ratio	1.00	1.00	1.00	1.00	1.00	1.00	1.00	1.00	1.00	1.00	1.00	1.00
Upstream Filter(I)	1.00	1.00	1.00	1.00	1.00	1.00	1.00	1.00	0.00	1.00	1.00	1.00
Uniform Delay (d), s/veh	55.0	38.5	33.8	59.8	43.8	43.1	55.3	25.1	0.0	54.9	33.1	14.6
Incr Delay (d2), s/veh	0.9	0.3	0.6	1.5	0.5	0.2	11.0	2.3	0.0	0.9	26.3	0.3
Initial Q Delay(d3),s/veh	0.0	0.0	0.0	0.0	0.0	0.0	0.0	0.0	0.0	0.0	0.0	0.0
%ile BackOfQ(50%),veh/ln	1.5	1.3	3.6	0.2	1.4	0.5	3.6	12.4	0.0	1.6	27.9	1.5
Unsig. Movement Delay, s/veh												
LnGrp Delay(d),s/veh	55.9	38.8	34.4	61.3	44.3	43.3	66.3	27.4	0.0	55.9	59.4	14.9
LnGrp LOS	E	D	C	E	D	D	E	C	A	E	F	B
Approach Vol, veh/h		402			77			1368			1820	
Approach Delay, s/veh		37.8			45.4			33.5			56.8	
Approach LOS		D			D			C			E	

Timer - Assigned Phs	1	2	3	4	5	6	7	8
Phs Duration (G+Y+Rc), s	14.1	66.7	7.6	34.5	15.7	65.1	13.9	28.1
Change Period (Y+Rc), s	* 5.7	* 8.4	* 5.7	7.5	* 5.7	* 8.4	* 5.7	7.5
Max Green Setting (Gmax), s	* 10	* 57	* 10	46.0	* 10	* 57	* 10	46.0
Max Q Clear Time (g_c+I1), s	5.6	33.0	2.4	12.9	9.5	58.7	5.4	5.0
Green Ext Time (p_c), s	0.0	18.1	0.0	3.4	0.0	0.0	0.0	0.7

Intersection Summary	
HCM 6th Ctrl Delay	45.8
HCM 6th LOS	D

Notes

* HCM 6th computational engine requires equal clearance times for the phases crossing the barrier.

Intersection	
Int Delay, s/veh	1.9

Movement	WBL	WBR	NBT	NBR	SBL	SBT
Lane Configurations						
Traffic Vol, veh/h	10	57	192	17	92	428
Future Vol, veh/h	10	57	192	17	92	428
Conflicting Peds, #/hr	10	10	0	10	10	0
Sign Control	Stop	Stop	Free	Free	Free	Free
RT Channelized	-	None	-	None	-	None
Storage Length	0	-	-	-	-	-
Veh in Median Storage, #	0	-	0	-	-	0
Grade, %	0	-	0	-	-	0
Peak Hour Factor	92	92	92	92	92	92
Heavy Vehicles, %	2	2	2	2	2	2
Mvmt Flow	11	62	209	18	100	465

Major/Minor	Minor1		Major1		Major2	
Conflicting Flow All	903	238	0	0	237	0
Stage 1	228	-	-	-	-	-
Stage 2	675	-	-	-	-	-
Critical Hdwy	6.42	6.22	-	-	4.12	-
Critical Hdwy Stg 1	5.42	-	-	-	-	-
Critical Hdwy Stg 2	5.42	-	-	-	-	-
Follow-up Hdwy	3.518	3.318	-	-	2.218	-
Pot Cap-1 Maneuver	308	801	-	-	1330	-
Stage 1	810	-	-	-	-	-
Stage 2	506	-	-	-	-	-
Platoon blocked, %			-	-		-
Mov Cap-1 Maneuver	271	786	-	-	1317	-
Mov Cap-2 Maneuver	271	-	-	-	-	-
Stage 1	802	-	-	-	-	-
Stage 2	450	-	-	-	-	-

Approach	WB	NB	SB
HCM Control Delay, s	11.7	0	1.4
HCM LOS	B		

Minor Lane/Major Mvmt	NBT	NBR	WBLn1	SBL	SBT
Capacity (veh/h)	-	-	612	1317	-
HCM Lane V/C Ratio	-	-	0.119	0.076	-
HCM Control Delay (s)	-	-	11.7	8	0
HCM Lane LOS	-	-	B	A	A
HCM 95th %tile Q(veh)	-	-	0.4	0.2	-

Intersection	
Int Delay, s/veh	11.1

Movement	EBL	EBR	NBL	NBT	SBT	SBR
Lane Configurations						
Traffic Vol, veh/h	57	52	84	556	826	92
Future Vol, veh/h	57	52	84	556	826	92
Conflicting Peds, #/hr	10	10	10	0	0	10
Sign Control	Stop	Stop	Free	Free	Free	Free
RT Channelized	-	None	-	None	-	None
Storage Length	0	-	-	-	-	-
Veh in Median Storage, #	0	-	-	0	0	-
Grade, %	0	-	-	0	0	-
Peak Hour Factor	92	92	92	92	92	92
Heavy Vehicles, %	2	2	2	2	2	2
Mvmt Flow	62	57	91	604	898	100

Major/Minor	Minor2		Major1		Major2	
Conflicting Flow All	1754	968	1008	0	-	0
Stage 1	958	-	-	-	-	-
Stage 2	796	-	-	-	-	-
Critical Hdwy	6.42	6.22	4.12	-	-	-
Critical Hdwy Stg 1	5.42	-	-	-	-	-
Critical Hdwy Stg 2	5.42	-	-	-	-	-
Follow-up Hdwy	3.518	3.318	2.218	-	-	-
Pot Cap-1 Maneuver	94	308	687	-	-	-
Stage 1	373	-	-	-	-	-
Stage 2	444	-	-	-	-	-
Platoon blocked, %				-	-	-
Mov Cap-1 Maneuver	74	302	680	-	-	-
Mov Cap-2 Maneuver	74	-	-	-	-	-
Stage 1	295	-	-	-	-	-
Stage 2	440	-	-	-	-	-

Approach	EB	NB	SB
HCM Control Delay, s	160.4	1.5	0
HCM LOS	F		

Minor Lane/Major Mvmt	NBL	NBT	EBLn1	SBT	SBR
Capacity (veh/h)	680	-	116	-	-
HCM Lane V/C Ratio	0.134	-	1.021	-	-
HCM Control Delay (s)	11.1	0	160.4	-	-
HCM Lane LOS	B	A	F	-	-
HCM 95th %tile Q(veh)	0.5	-	6.8	-	-

Intersection	
Int Delay, s/veh	2.1

Movement	WBL	WBR	NBT	NBR	SBL	SBT
Lane Configurations						
Traffic Vol, veh/h	15	52	157	25	84	354
Future Vol, veh/h	15	52	157	25	84	354
Conflicting Peds, #/hr	10	10	0	10	10	0
Sign Control	Stop	Stop	Free	Free	Free	Free
RT Channelized	-	None	-	None	-	None
Storage Length	0	-	-	-	-	-
Veh in Median Storage, #	0	-	0	-	-	0
Grade, %	0	-	0	-	-	0
Peak Hour Factor	92	92	92	92	92	92
Heavy Vehicles, %	2	2	2	2	2	2
Mvmt Flow	16	57	171	27	91	385

Major/Minor	Minor1		Major1		Major2	
Conflicting Flow All	772	205	0	0	208	0
Stage 1	195	-	-	-	-	-
Stage 2	577	-	-	-	-	-
Critical Hdwy	6.42	6.22	-	-	4.12	-
Critical Hdwy Stg 1	5.42	-	-	-	-	-
Critical Hdwy Stg 2	5.42	-	-	-	-	-
Follow-up Hdwy	3.518	3.318	-	-	2.218	-
Pot Cap-1 Maneuver	368	836	-	-	1363	-
Stage 1	838	-	-	-	-	-
Stage 2	562	-	-	-	-	-
Platoon blocked, %			-	-		-
Mov Cap-1 Maneuver	330	820	-	-	1350	-
Mov Cap-2 Maneuver	330	-	-	-	-	-
Stage 1	830	-	-	-	-	-
Stage 2	509	-	-	-	-	-

Approach	WB	NB	SB
HCM Control Delay, s	11.6	0	1.5
HCM LOS	B		

Minor Lane/Major Mvmt	NBT	NBR	WBLn1	SBL	SBT
Capacity (veh/h)	-	-	615	1350	-
HCM Lane V/C Ratio	-	-	0.118	0.068	-
HCM Control Delay (s)	-	-	11.6	7.9	0
HCM Lane LOS	-	-	B	A	A
HCM 95th %tile Q(veh)	-	-	0.4	0.2	-

Intersection	
Int Delay, s/veh	8

Movement	EBL	EBR	NBL	NBT	SBT	SBR
Lane Configurations						
Traffic Vol, veh/h	59	47	67	629	805	75
Future Vol, veh/h	59	47	67	629	805	75
Conflicting Peds, #/hr	10	10	10	0	0	10
Sign Control	Stop	Stop	Free	Free	Free	Free
RT Channelized	-	None	-	None	-	None
Storage Length	0	-	410	-	-	80
Veh in Median Storage, #	0	-	-	0	0	-
Grade, %	0	-	-	0	0	-
Peak Hour Factor	92	92	92	92	92	92
Heavy Vehicles, %	2	2	2	2	2	2
Mvmt Flow	64	51	73	684	875	82

Major/Minor	Minor2		Major1		Major2	
Conflicting Flow All	1725	895	967	0	-	0
Stage 1	885	-	-	-	-	-
Stage 2	840	-	-	-	-	-
Critical Hdwy	6.42	6.22	4.12	-	-	-
Critical Hdwy Stg 1	5.42	-	-	-	-	-
Critical Hdwy Stg 2	5.42	-	-	-	-	-
Follow-up Hdwy	3.518	3.318	2.218	-	-	-
Pot Cap-1 Maneuver	98	339	712	-	-	-
Stage 1	403	-	-	-	-	-
Stage 2	424	-	-	-	-	-
Platoon blocked, %				-	-	-
Mov Cap-1 Maneuver	86	333	705	-	-	-
Mov Cap-2 Maneuver	86	-	-	-	-	-
Stage 1	357	-	-	-	-	-
Stage 2	420	-	-	-	-	-

Approach	EB	NB	SB
HCM Control Delay, s	119.7	1	0
HCM LOS	F		

Minor Lane/Major Mvmt	NBL	NBT	EBLn1	SBT	SBR
Capacity (veh/h)	705	-	128	-	-
HCM Lane V/C Ratio	0.103	-	0.9	-	-
HCM Control Delay (s)	10.7	-	119.7	-	-
HCM Lane LOS	B	-	F	-	-
HCM 95th %tile Q(veh)	0.3	-	5.8	-	-

Intersection	
Int Delay, s/veh	3.3

Movement	EBL	EBT	WBT	WBR	SBL	SBR
Lane Configurations						
Traffic Vol, veh/h	0	0	0	25	15	0
Future Vol, veh/h	0	0	0	25	15	0
Conflicting Peds, #/hr	10	0	0	10	10	10
Sign Control	Free	Free	Free	Free	Stop	Stop
RT Channelized	-	None	-	None	-	None
Storage Length	-	-	-	-	0	-
Veh in Median Storage, #	-	0	0	-	0	-
Grade, %	-	0	0	-	0	-
Peak Hour Factor	92	92	92	92	92	92
Heavy Vehicles, %	2	2	2	2	2	2
Mvmt Flow	0	0	0	27	16	0

Major/Minor	Major1		Major2		Minor2	
Conflicting Flow All	37	0	-	0	34	34
Stage 1	-	-	-	-	24	-
Stage 2	-	-	-	-	10	-
Critical Hdwy	4.12	-	-	-	6.42	6.22
Critical Hdwy Stg 1	-	-	-	-	5.42	-
Critical Hdwy Stg 2	-	-	-	-	5.42	-
Follow-up Hdwy	2.218	-	-	-	3.518	3.318
Pot Cap-1 Maneuver	1574	-	-	-	979	1039
Stage 1	-	-	-	-	999	-
Stage 2	-	-	-	-	1013	-
Platoon blocked, %		-	-	-		
Mov Cap-1 Maneuver	1559	-	-	-	959	1019
Mov Cap-2 Maneuver	-	-	-	-	959	-
Stage 1	-	-	-	-	989	-
Stage 2	-	-	-	-	1003	-

Approach	EB	WB	SB
HCM Control Delay, s	0	0	8.8
HCM LOS			A

Minor Lane/Major Mvmt	EBL	EBT	WBT	WBR	SBLn1
Capacity (veh/h)	1559	-	-	-	959
HCM Lane V/C Ratio	-	-	-	-	0.017
HCM Control Delay (s)	0	-	-	-	8.8
HCM Lane LOS	A	-	-	-	A
HCM 95th %tile Q(veh)	0	-	-	-	0.1

Intersection	
Int Delay, s/veh	2

Movement	EBL	EBT	WBT	WBR	SBL	SBR
Lane Configurations						
Traffic Vol, veh/h	0	15	25	34	21	0
Future Vol, veh/h	0	15	25	34	21	0
Conflicting Peds, #/hr	10	0	0	10	10	10
Sign Control	Free	Free	Free	Free	Stop	Stop
RT Channelized	-	None	-	None	-	None
Storage Length	-	-	-	-	0	-
Veh in Median Storage, #	-	0	0	-	0	-
Grade, %	-	0	0	-	0	-
Peak Hour Factor	92	92	92	92	92	92
Heavy Vehicles, %	2	2	2	2	2	2
Mvmt Flow	0	16	27	37	23	0

Major/Minor	Major1		Major2		Minor2	
Conflicting Flow All	74	0	-	0	82	66
Stage 1	-	-	-	-	56	-
Stage 2	-	-	-	-	26	-
Critical Hdwy	4.12	-	-	-	6.42	6.22
Critical Hdwy Stg 1	-	-	-	-	5.42	-
Critical Hdwy Stg 2	-	-	-	-	5.42	-
Follow-up Hdwy	2.218	-	-	-	3.518	3.318
Pot Cap-1 Maneuver	1526	-	-	-	920	998
Stage 1	-	-	-	-	967	-
Stage 2	-	-	-	-	997	-
Platoon blocked, %		-	-	-		
Mov Cap-1 Maneuver	1511	-	-	-	902	979
Mov Cap-2 Maneuver	-	-	-	-	902	-
Stage 1	-	-	-	-	957	-
Stage 2	-	-	-	-	987	-

Approach	EB	WB	SB
HCM Control Delay, s	0	0	9.1
HCM LOS			A

Minor Lane/Major Mvmt	EBL	EBT	WBT	WBR	SBLn1
Capacity (veh/h)	1511	-	-	-	902
HCM Lane V/C Ratio	-	-	-	-	0.025
HCM Control Delay (s)	0	-	-	-	9.1
HCM Lane LOS	A	-	-	-	A
HCM 95th %tile Q(veh)	0	-	-	-	0.1

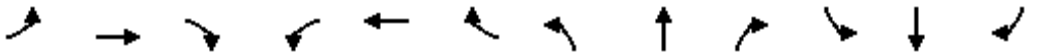

Movement	EBL	EBT	EBR	WBL	WBT	WBR	NBL	NBT	NBR	SBL	SBT	SBR
Lane Configurations												
Traffic Volume (veh/h)	109	45	56	53	59	130	76	376	22	165	389	132
Future Volume (veh/h)	109	45	56	53	59	130	76	376	22	165	389	132
Initial Q (Qb), veh	0	0	0	0	0	0	0	0	0	0	0	0
Ped-Bike Adj(A_pbT)	1.00		0.97	1.00		0.94	1.00		0.97	1.00		0.97
Parking Bus, Adj	1.00	1.00	1.00	1.00	1.00	1.00	1.00	1.00	1.00	1.00	1.00	1.00
Work Zone On Approach		No			No			No			No	
Adj Sat Flow, veh/h/ln	1870	1870	1870	1870	1870	1870	1870	1870	1870	1870	1870	1870
Adj Flow Rate, veh/h	147	61	76	79	88	194	89	442	26	174	409	139
Peak Hour Factor	0.74	0.74	0.74	0.67	0.67	0.67	0.85	0.85	0.85	0.95	0.95	0.95
Percent Heavy Veh, %	2	2	2	2	2	2	2	2	2	2	2	2
Cap, veh/h	237	428	350	204	393	313	231	536	32	219	779	261
Arrive On Green	0.13	0.23	0.23	0.11	0.21	0.21	0.13	0.31	0.31	0.12	0.30	0.30
Sat Flow, veh/h	1781	1870	1531	1781	1870	1489	1781	1746	103	1781	2591	869
Grp Volume(v), veh/h	147	61	76	79	88	194	89	0	468	174	279	269
Grp Sat Flow(s),veh/h/ln	1781	1870	1531	1781	1870	1489	1781	0	1848	1781	1777	1683
Q Serve(g_s), s	6.2	2.1	3.2	3.3	3.1	9.4	3.6	0.0	18.7	7.5	10.3	10.6
Cycle Q Clear(g_c), s	6.2	2.1	3.2	3.3	3.1	9.4	3.6	0.0	18.7	7.5	10.3	10.6
Prop In Lane	1.00		1.00	1.00		1.00	1.00		0.06	1.00		0.52
Lane Grp Cap(c), veh/h	237	428	350	204	393	313	231	0	568	219	534	506
V/C Ratio(X)	0.62	0.14	0.22	0.39	0.22	0.62	0.38	0.00	0.82	0.79	0.52	0.53
Avail Cap(c_a), veh/h	336	824	674	247	730	581	269	0	884	404	984	932
HCM Platoon Ratio	1.00	1.00	1.00	1.00	1.00	1.00	1.00	1.00	1.00	1.00	1.00	1.00
Upstream Filter(I)	1.00	1.00	1.00	1.00	1.00	1.00	1.00	0.00	1.00	1.00	1.00	1.00
Uniform Delay (d), s/veh	32.5	24.4	24.9	32.6	26.0	28.5	31.6	0.0	25.5	33.8	23.0	23.1
Incr Delay (d2), s/veh	1.0	0.2	0.4	0.4	0.4	2.9	0.4	0.0	4.9	2.5	1.1	1.2
Initial Q Delay(d3),s/veh	0.0	0.0	0.0	0.0	0.0	0.0	0.0	0.0	0.0	0.0	0.0	0.0
%ile BackOfQ(50%),veh/ln	2.7	0.9	1.2	1.4	1.4	3.5	1.5	0.0	8.3	3.3	4.2	4.1
Unsig. Movement Delay, s/veh												
LnGrp Delay(d),s/veh	33.5	24.6	25.3	33.1	26.4	31.4	32.0	0.0	30.4	36.3	24.2	24.4
LnGrp LOS	C	C	C	C	C	C	C	A	C	D	C	C
Approach Vol, veh/h		284			361			557			722	
Approach Delay, s/veh		29.4			30.5			30.7			27.2	
Approach LOS		C			C			C			C	

Timer - Assigned Phs	1	2	3	4	5	6	7	8
Phs Duration (G+Y+Rc), s	13.8	30.4	13.1	22.2	14.3	29.9	14.6	20.7
Change Period (Y+Rc), s	4.0	6.0	4.0	4.0	4.0	6.0	4.0	4.0
Max Green Setting (Gmax), s	18.0	38.0	11.0	35.0	12.0	44.0	15.0	31.0
Max Q Clear Time (g_c+I1), s	9.5	20.7	5.3	5.2	5.6	12.6	8.2	11.4
Green Ext Time (p_c), s	0.1	3.6	0.0	0.8	0.0	5.2	0.1	1.7

Intersection Summary	
HCM 6th Ctrl Delay	29.1
HCM 6th LOS	C

Intersection	
Intersection Delay, s/veh	106.4
Intersection LOS	F

Movement	EBL	EBT	EBR	WBL	WBT	WBR	NBL	NBT	NBR	SBL	SBT	SBR
Lane Configurations												
Traffic Vol, veh/h	24	199	246	15	118	248	103	233	17	234	291	16
Future Vol, veh/h	24	199	246	15	118	248	103	233	17	234	291	16
Peak Hour Factor	0.83	0.83	0.83	0.90	0.90	0.90	0.89	0.89	0.89	0.91	0.91	0.91
Heavy Vehicles, %	2	2	2	2	2	2	2	2	2	2	2	2
Mvmt Flow	29	240	296	17	131	276	116	262	19	257	320	18
Number of Lanes	0	1	1	0	1	1	0	1	0	0	1	0

Approach	EB	WB	NB	SB
Opposing Approach	WB	EB	SB	NB
Opposing Lanes	2	2	1	1
Conflicting Approach Left	SB	NB	EB	WB
Conflicting Lanes Left	1	1	2	2
Conflicting Approach Right	NB	SB	WB	EB
Conflicting Lanes Right	1	1	2	2
HCM Control Delay	32.9	27	74.7	254
HCM LOS	D	D	F	F

Lane	NBLn1	EBLn1	EBLn2	WBLn1	WBLn2	SBLn1
Vol Left, %	29%	11%	0%	11%	0%	43%
Vol Thru, %	66%	89%	0%	89%	0%	54%
Vol Right, %	5%	0%	100%	0%	100%	3%
Sign Control	Stop	Stop	Stop	Stop	Stop	Stop
Traffic Vol by Lane	353	223	246	133	248	541
LT Vol	103	24	0	15	0	234
Through Vol	233	199	0	118	0	291
RT Vol	17	0	246	0	248	16
Lane Flow Rate	397	269	296	148	276	595
Geometry Grp	2	7	7	7	7	2
Degree of Util (X)	0.975	0.691	0.7	0.39	0.669	1.482
Departure Headway (Hd)	10.196	10.512	9.713	10.778	9.974	8.975
Convergence, Y/N	Yes	Yes	Yes	Yes	Yes	Yes
Cap	361	347	376	337	364	404
Service Time	8.196	8.212	7.413	8.478	7.674	7.069
HCM Lane V/C Ratio	1.1	0.775	0.787	0.439	0.758	1.473
HCM Control Delay	74.7	33.7	32.2	20.2	30.7	254
HCM Lane LOS	F	D	D	C	D	F
HCM 95th-tile Q	10.8	4.9	5.1	1.8	4.6	31

Intersection	
Intersection Delay, s/veh	6.1
Intersection LOS	A

Approach	EB	WB	NB	SB
Entry Lanes	1	1	1	1
Conflicting Circle Lanes	1	1	1	1
Adj Approach Flow, veh/h	450	407	48	128
Demand Flow Rate, veh/h	458	415	49	131
Vehicles Circulating, veh/h	129	51	528	401
Vehicles Exiting, veh/h	403	526	59	65
Ped Vol Crossing Leg, #/h	10	10	10	10
Ped Cap Adj	0.999	0.999	0.999	0.999
Approach Delay, s/veh	6.8	5.7	5.2	5.4
Approach LOS	A	A	A	A

Lane	Left	Left	Left	Left
Designated Moves	LTR	LTR	LTR	LTR
Assumed Moves	LTR	LTR	LTR	LTR
RT Channelized				
Lane Util	1.000	1.000	1.000	1.000
Follow-Up Headway, s	2.609	2.609	2.609	2.609
Critical Headway, s	4.976	4.976	4.976	4.976
Entry Flow, veh/h	458	415	49	131
Cap Entry Lane, veh/h	1210	1310	805	917
Entry HV Adj Factor	0.982	0.980	0.972	0.980
Flow Entry, veh/h	450	407	48	128
Cap Entry, veh/h	1186	1282	781	897
V/C Ratio	0.379	0.317	0.061	0.143
Control Delay, s/veh	6.8	5.7	5.2	5.4
LOS	A	A	A	A
95th %tile Queue, veh	2	1	0	0

APPENDIX J

YEAR 2040 WITHOUT PROJECT INTERSECTION ANALYSIS WORKSHEETS

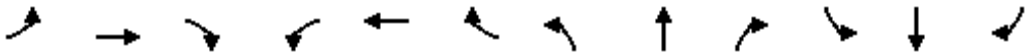

Movement	EBL	EBT	EBR	WBL	WBT	WBR	NBL	NBT	NBR	SBL	SBT	SBR
Lane Configurations												
Traffic Volume (veh/h)	119	254	221	104	263	68	145	865	93	103	611	110
Future Volume (veh/h)	119	254	221	104	263	68	145	865	93	103	611	110
Initial Q (Qb), veh	0	0	0	0	0	0	0	0	0	0	0	0
Ped-Bike Adj(A_pbT)	1.00		0.97	1.00		0.97	1.00		0.96	1.00		0.96
Parking Bus, Adj	1.00	1.00	1.00	1.00	1.00	1.00	1.00	1.00	1.00	1.00	1.00	1.00
Work Zone On Approach		No			No			No			No	
Adj Sat Flow, veh/h/ln	1870	1870	1870	1870	1870	1870	1870	1870	1870	1870	1870	1870
Adj Flow Rate, veh/h	168	358	311	162	411	106	186	1109	119	151	899	162
Peak Hour Factor	0.71	0.71	0.71	0.64	0.64	0.64	0.78	0.78	0.78	0.68	0.68	0.68
Percent Heavy Veh, %	2	2	2	2	2	2	2	2	2	2	2	2
Cap, veh/h	194	462	378	188	455	373	212	1170	125	177	1025	185
Arrive On Green	0.11	0.25	0.25	0.11	0.24	0.24	0.12	0.36	0.36	0.10	0.34	0.34
Sat Flow, veh/h	1781	1870	1533	1781	1870	1533	1781	3221	345	1781	2983	537
Grp Volume(v), veh/h	168	358	311	162	411	106	186	611	617	151	535	526
Grp Sat Flow(s),veh/h/ln	1781	1870	1533	1781	1870	1533	1781	1777	1790	1781	1777	1744
Q Serve(g_s), s	11.3	21.8	23.4	10.9	26.0	6.9	12.5	40.7	40.9	10.2	34.5	34.6
Cycle Q Clear(g_c), s	11.3	21.8	23.4	10.9	26.0	6.9	12.5	40.7	40.9	10.2	34.5	34.6
Prop In Lane	1.00		1.00	1.00		1.00	1.00		0.19	1.00		0.31
Lane Grp Cap(c), veh/h	194	462	378	188	455	373	212	645	650	177	610	599
V/C Ratio(X)	0.87	0.78	0.82	0.86	0.90	0.28	0.88	0.95	0.95	0.85	0.88	0.88
Avail Cap(c_a), veh/h	201	497	407	197	492	403	216	645	650	181	610	599
HCM Platoon Ratio	1.00	1.00	1.00	1.00	1.00	1.00	1.00	1.00	1.00	1.00	1.00	1.00
Upstream Filter(I)	1.00	1.00	1.00	0.42	0.42	0.42	0.37	0.37	0.37	1.00	1.00	1.00
Uniform Delay (d), s/veh	53.5	42.8	43.4	53.7	44.7	37.5	52.9	37.7	37.8	54.1	37.6	37.6
Incr Delay (d2), s/veh	28.3	6.2	10.9	13.8	8.9	0.1	13.5	12.2	12.5	28.8	16.3	16.6
Initial Q Delay(d3),s/veh	0.0	0.0	0.0	0.0	0.0	0.0	0.0	0.0	0.0	0.0	0.0	0.0
%ile BackOfQ(50%),veh/ln	6.6	10.7	9.9	5.6	13.0	2.6	6.4	19.6	19.9	6.0	17.6	17.3
Unsig. Movement Delay, s/veh												
LnGrp Delay(d),s/veh	81.8	49.0	54.3	67.5	53.7	37.6	66.4	49.9	50.2	82.8	53.9	54.2
LnGrp LOS	F	D	D	E	D	D	E	D	D	F	D	D
Approach Vol, veh/h		837			679			1414			1212	
Approach Delay, s/veh		57.6			54.4			52.2			57.7	
Approach LOS		E			D			D			E	

Timer - Assigned Phs	1	2	3	4	5	6	7	8
Phs Duration (G+Y+Rc), s	17.7	50.0	18.5	35.8	20.1	47.6	18.9	35.4
Change Period (Y+Rc), s	5.6	5.7	5.6	5.7	5.6	5.7	5.6	5.7
Max Green Setting (Gmax), s	12.4	41.1	13.5	32.4	14.8	38.7	13.8	32.1
Max Q Clear Time (g_c+I1), s	12.2	42.9	12.9	25.4	14.5	36.6	13.3	28.0
Green Ext Time (p_c), s	0.0	0.0	0.0	1.3	0.0	1.1	0.0	0.8

Intersection Summary	
HCM 6th Ctrl Delay	55.2
HCM 6th LOS	E



Movement	EBL	EBT	EBR	WBL	WBT	WBR	NBL	NBT	NBR	SBL	SBT	SBR
Lane Configurations												
Traffic Volume (veh/h)	86	277	91	22	286	20	149	668	30	74	434	100
Future Volume (veh/h)	86	277	91	22	286	20	149	668	30	74	434	100
Initial Q (Qb), veh	0	0	0	0	0	0	0	0	0	0	0	0
Ped-Bike Adj(A_pbT)	1.00		0.98	1.00		0.97	1.00		0.95	1.00		0.95
Parking Bus, Adj	1.00	1.00	1.00	1.00	1.00	1.00	1.00	1.00	1.00	1.00	1.00	1.00
Work Zone On Approach		No			No			No			No	
Adj Sat Flow, veh/h/ln	1870	1870	1870	1870	1870	1870	1870	1870	1870	1870	1870	1870
Adj Flow Rate, veh/h	126	407	134	31	409	29	199	891	40	110	648	149
Peak Hour Factor	0.68	0.68	0.68	0.70	0.70	0.70	0.75	0.75	0.75	0.67	0.67	0.67
Percent Heavy Veh, %	2	2	2	2	2	2	2	2	2	2	2	2
Cap, veh/h	188	597	197	62	478	33	237	1158	52	140	796	183
Arrive On Green	0.11	0.45	0.45	0.30	0.30	0.30	0.13	0.34	0.34	0.08	0.28	0.28
Sat Flow, veh/h	1781	1338	441	67	1591	109	1781	3455	155	1781	2838	651
Grp Volume(v), veh/h	126	0	541	469	0	0	199	458	473	110	405	392
Grp Sat Flow(s),veh/h/ln	1781	0	1779	1768	0	0	1781	1777	1834	1781	1777	1712
Q Serve(g_s), s	6.2	0.0	22.0	11.7	0.0	0.0	9.9	21.0	21.0	5.5	19.3	19.4
Cycle Q Clear(g_c), s	6.2	0.0	22.0	22.8	0.0	0.0	9.9	21.0	21.0	5.5	19.3	19.4
Prop In Lane	1.00		0.25	0.07		0.06	1.00		0.08	1.00		0.38
Lane Grp Cap(c), veh/h	188	0	794	573	0	0	237	596	615	140	498	480
V/C Ratio(X)	0.67	0.00	0.68	0.82	0.00	0.00	0.84	0.77	0.77	0.79	0.81	0.82
Avail Cap(c_a), veh/h	261	0	1087	785	0	0	359	765	789	249	655	631
HCM Platoon Ratio	1.00	1.00	1.00	1.00	1.00	1.00	1.00	1.00	1.00	1.00	1.00	1.00
Upstream Filter(I)	1.00	0.00	1.00	1.00	0.00	0.00	1.00	1.00	1.00	1.00	1.00	1.00
Uniform Delay (d), s/veh	39.1	0.0	20.0	30.0	0.0	0.0	38.4	27.0	27.1	41.1	30.5	30.5
Incr Delay (d2), s/veh	4.1	0.0	1.0	4.9	0.0	0.0	10.4	3.6	3.5	9.3	5.9	6.2
Initial Q Delay(d3),s/veh	0.0	0.0	0.0	0.0	0.0	0.0	0.0	0.0	0.0	0.0	0.0	0.0
%ile BackOfQ(50%),veh/ln	2.9	0.0	8.7	10.0	0.0	0.0	4.9	9.2	9.4	2.8	8.8	8.6
Unsig. Movement Delay, s/veh												
LnGrp Delay(d),s/veh	43.2	0.0	21.0	34.9	0.0	0.0	48.8	30.7	30.6	50.4	36.4	36.7
LnGrp LOS	D	A	C	C	A	A	D	C	C	D	D	D
Approach Vol, veh/h		667			469			1130			907	
Approach Delay, s/veh		25.2			34.9			33.8			38.2	
Approach LOS		C			C			C			D	

Timer - Assigned Phs	1	2		4	5	6	7	8
Phs Duration (G+Y+Rc), s	10.8	35.0		45.1	15.8	30.0	13.3	31.8
Change Period (Y+Rc), s	3.7	4.5		4.5	3.7	4.5	3.7	4.5
Max Green Setting (Gmax), s	12.3	39.1		55.5	18.3	33.5	13.3	38.5
Max Q Clear Time (g_c+I1), s	7.5	23.0		24.0	11.9	21.4	8.2	24.8
Green Ext Time (p_c), s	0.1	5.6		3.9	0.3	4.1	0.1	2.5

Intersection Summary		
HCM 6th Ctrl Delay		33.4
HCM 6th LOS		C



Movement	EBL	EBT	EBR	WBL	WBT	WBR	NBL	NBT	NBR	SBL	SBT	SBR
Lane Configurations												
Traffic Volume (veh/h)	48	210	75	91	150	219	40	655	101	128	519	17
Future Volume (veh/h)	48	210	75	91	150	219	40	655	101	128	519	17
Initial Q (Qb), veh	0	0	0	0	0	0	0	0	0	0	0	0
Ped-Bike Adj(A_pbT)	1.00		0.97	1.00		0.96	1.00		0.95	1.00		0.95
Parking Bus, Adj	1.00	1.00	1.00	1.00	1.00	1.00	1.00	1.00	1.00	1.00	1.00	1.00
Work Zone On Approach		No			No			No			No	
Adj Sat Flow, veh/h/ln	1870	1870	1870	1870	1870	1870	1870	1870	1870	1870	1870	1870
Adj Flow Rate, veh/h	62	269	96	111	183	267	45	744	115	154	625	20
Peak Hour Factor	0.78	0.78	0.78	0.82	0.82	0.82	0.88	0.88	0.88	0.83	0.83	0.83
Percent Heavy Veh, %	2	2	2	2	2	2	2	2	2	2	2	2
Cap, veh/h	66	287	102	145	240	320	64	811	125	177	1155	37
Arrive On Green	0.26	0.26	0.26	0.21	0.21	0.21	0.04	0.27	0.27	0.10	0.33	0.33
Sat Flow, veh/h	257	1115	398	693	1143	1527	1781	3059	473	1781	3508	112
Grp Volume(v), veh/h	427	0	0	294	0	267	45	432	427	154	316	329
Grp Sat Flow(s),veh/h/ln	1770	0	0	1836	0	1527	1781	1777	1755	1781	1777	1844
Q Serve(g_s), s	32.7	0.0	0.0	20.9	0.0	23.2	3.5	32.7	32.7	11.8	20.1	20.2
Cycle Q Clear(g_c), s	32.7	0.0	0.0	20.9	0.0	23.2	3.5	32.7	32.7	11.8	20.1	20.2
Prop In Lane	0.15		0.22	0.38		1.00	1.00		0.27	1.00		0.06
Lane Grp Cap(c), veh/h	455	0	0	385	0	320	64	471	465	177	585	607
V/C Ratio(X)	0.94	0.00	0.00	0.76	0.00	0.83	0.71	0.92	0.92	0.87	0.54	0.54
Avail Cap(c_a), veh/h	473	0	0	491	0	408	115	480	474	197	585	607
HCM Platoon Ratio	1.00	1.00	1.00	1.00	1.00	1.00	1.00	1.00	1.00	1.00	1.00	1.00
Upstream Filter(I)	1.00	0.00	0.00	1.00	0.00	1.00	1.00	1.00	1.00	1.00	1.00	1.00
Uniform Delay (d), s/veh	50.4	0.0	0.0	51.5	0.0	52.4	66.0	49.4	49.4	61.4	37.9	37.9
Incr Delay (d2), s/veh	26.2	0.0	0.0	5.3	0.0	11.2	5.3	24.3	24.7	27.4	2.9	2.8
Initial Q Delay(d3),s/veh	0.0	0.0	0.0	0.0	0.0	0.0	0.0	0.0	0.0	0.0	0.0	0.0
%ile BackOfQ(50%),veh/ln	17.6	0.0	0.0	10.1	0.0	9.8	1.7	17.4	17.2	6.6	9.1	9.4
Unsig. Movement Delay, s/veh												
LnGrp Delay(d),s/veh	76.5	0.0	0.0	56.8	0.0	63.6	71.4	73.7	74.1	88.8	40.8	40.7
LnGrp LOS	E	A	A	E	A	E	E	E	E	F	D	D
Approach Vol, veh/h		427			561			904			799	
Approach Delay, s/veh		76.5			60.0			73.8			50.0	
Approach LOS		E			E			E			D	

Timer - Assigned Phs	1	2		4	5	6		8
Phs Duration (G+Y+Rc), s	10.6	51.0		35.1	19.5	42.1		41.7
Change Period (Y+Rc), s	* 5.7	5.4		6.1	* 5.7	5.4		6.1
Max Green Setting (Gmax), s	* 8.9	43.8		37.0	* 15	37.4		37.0
Max Q Clear Time (g_c+I1), s	15.5	22.2		25.2	13.8	34.7		34.7
Green Ext Time (p_c), s	0.0	8.6		2.1	0.0	2.0		0.6

Intersection Summary	
HCM 6th Ctrl Delay	64.3
HCM 6th LOS	E

Notes

* HCM 6th computational engine requires equal clearance times for the phases crossing the barrier.



Movement	EBL	EBT	EBR	WBL	WBT	WBR	NBL	NBT	NBR	SBL	SBT	SBR
Lane Configurations												
Traffic Volume (veh/h)	69	98	101	39	153	62	132	452	73	30	372	65
Future Volume (veh/h)	69	98	101	39	153	62	132	452	73	30	372	65
Initial Q (Qb), veh	0	0	0	0	0	0	0	0	0	0	0	0
Ped-Bike Adj(A_pbT)	1.00		0.91	1.00		0.94	1.00		0.96	1.00		0.95
Parking Bus, Adj	1.00	1.00	1.00	1.00	1.00	1.00	1.00	1.00	1.00	1.00	1.00	1.00
Work Zone On Approach		No			No			No			No	
Adj Sat Flow, veh/h/ln	1870	1870	1870	1870	1870	1870	1870	1870	1870	1870	1870	1870
Adj Flow Rate, veh/h	79	113	116	47	184	75	155	532	86	39	483	84
Peak Hour Factor	0.87	0.87	0.87	0.83	0.83	0.83	0.85	0.85	0.85	0.77	0.77	0.77
Percent Heavy Veh, %	2	2	2	2	2	2	2	2	2	2	2	2
Cap, veh/h	97	139	187	56	220	90	188	580	94	61	562	454
Arrive On Green	0.13	0.13	0.13	0.21	0.21	0.21	0.11	0.37	0.37	0.03	0.30	0.30
Sat Flow, veh/h	754	1079	1449	268	1051	428	1781	1560	252	1781	1870	1508
Grp Volume(v), veh/h	192	0	116	306	0	0	155	0	618	39	483	84
Grp Sat Flow(s),veh/h/ln	1833	0	1449	1747	0	0	1781	0	1812	1781	1870	1508
Q Serve(g_s), s	9.2	0.0	6.9	15.2	0.0	0.0	7.7	0.0	29.5	2.0	22.1	3.7
Cycle Q Clear(g_c), s	9.2	0.0	6.9	15.2	0.0	0.0	7.7	0.0	29.5	2.0	22.1	3.7
Prop In Lane	0.41		1.00	0.15		0.25	1.00		0.14	1.00		1.00
Lane Grp Cap(c), veh/h	237	0	187	365	0	0	188	0	673	61	562	454
V/C Ratio(X)	0.81	0.00	0.62	0.84	0.00	0.00	0.83	0.00	0.92	0.63	0.86	0.19
Avail Cap(c_a), veh/h	345	0	273	503	0	0	283	0	963	106	808	652
HCM Platoon Ratio	1.00	1.00	1.00	1.00	1.00	1.00	1.00	1.00	1.00	1.00	1.00	1.00
Upstream Filter(I)	1.00	0.00	1.00	1.00	0.00	0.00	1.00	0.00	1.00	1.00	1.00	1.00
Uniform Delay (d), s/veh	38.4	0.0	37.4	34.4	0.0	0.0	39.8	0.0	27.2	43.2	29.9	23.5
Incr Delay (d2), s/veh	5.6	0.0	1.3	6.5	0.0	0.0	7.0	0.0	8.3	4.0	4.7	0.1
Initial Q Delay(d3),s/veh	0.0	0.0	0.0	0.0	0.0	0.0	0.0	0.0	0.0	0.0	0.0	0.0
%ile BackOfQ(50%),veh/ln	4.4	0.0	2.4	6.9	0.0	0.0	3.6	0.0	13.1	0.9	9.9	1.3
Unsig. Movement Delay, s/veh												
LnGrp Delay(d),s/veh	44.1	0.0	38.6	40.9	0.0	0.0	46.8	0.0	35.5	47.2	34.6	23.6
LnGrp LOS	D	A	D	D	A	A	D	A	D	D	C	C
Approach Vol, veh/h		308			306			773			606	
Approach Delay, s/veh		42.0			40.9			37.8			33.9	
Approach LOS		D			D			D			C	

Timer - Assigned Phs	1	2		4	5	6		8
Phs Duration (G+Y+Rc), s	8.7	39.5		17.6	15.2	33.1		24.9
Change Period (Y+Rc), s	5.6	5.8		5.9	5.6	5.8		5.9
Max Green Setting (Gmax), s	5.4	48.2		17.1	14.4	39.2		26.1
Max Q Clear Time (g_c+I1), s	4.0	31.5		11.2	9.7	24.1		17.2
Green Ext Time (p_c), s	0.0	2.2		0.5	0.0	1.6		0.8

Intersection Summary		
HCM 6th Ctrl Delay	37.7	
HCM 6th LOS	D	

Intersection	
Intersection Delay, s/veh	140
Intersection LOS	F

Movement	EBL	EBT	EBR	WBL	WBT	WBR	NBL	NBT	NBR	SBL	SBT	SBR
Lane Configurations												
Traffic Vol, veh/h	62	176	93	50	132	100	123	646	74	91	401	35
Future Vol, veh/h	62	176	93	50	132	100	123	646	74	91	401	35
Peak Hour Factor	0.73	0.73	0.73	0.74	0.74	0.74	0.78	0.78	0.78	0.66	0.66	0.66
Heavy Vehicles, %	2	2	2	2	2	2	2	2	2	2	2	2
Mvmt Flow	85	241	127	68	178	135	158	828	95	138	608	53
Number of Lanes	0	1	0	0	1	0	1	2	0	1	2	0

Approach	EB	WB	NB	SB
Opposing Approach	WB	EB	SB	NB
Opposing Lanes	1	1	3	3
Conflicting Approach Left	SB	NB	EB	WB
Conflicting Lanes Left	3	3	1	1
Conflicting Approach Right	NB	SB	WB	EB
Conflicting Lanes Right	3	3	1	1
HCM Control Delay	203.1	123.7	168.6	73.2
HCM LOS	F	F	F	F

Lane	NBLn1	NBLn2	NBLn3	EBLn1	WBLn1	SBLn1	SBLn2	SBLn3
Vol Left, %	100%	0%	0%	19%	18%	100%	0%	0%
Vol Thru, %	0%	100%	74%	53%	47%	0%	100%	79%
Vol Right, %	0%	0%	26%	28%	35%	0%	0%	21%
Sign Control	Stop	Stop	Stop	Stop	Stop	Stop	Stop	Stop
Traffic Vol by Lane	123	431	289	331	282	91	267	169
LT Vol	123	0	0	62	50	91	0	0
Through Vol	0	431	215	176	132	0	267	134
RT Vol	0	0	74	93	100	0	0	35
Lane Flow Rate	158	552	371	453	381	138	405	256
Geometry Grp	7	7	7	7	7	7	7	7
Degree of Util (X)	0.451	1.502	0.991	1.337	1.118	0.396	1.108	0.688
Departure Headway (Hd)	11.58	11.039	10.844	11.639	12.075	11.437	10.895	10.738
Convergence, Y/N	Yes	Yes	Yes	Yes	Yes	Yes	Yes	Yes
Cap	314	337	338	317	305	317	336	340
Service Time	9.28	8.739	8.544	9.339	9.775	9.137	8.595	8.438
HCM Lane V/C Ratio	0.503	1.638	1.098	1.429	1.249	0.435	1.205	0.753
HCM Control Delay	23.5	268.9	81.1	203.1	123.7	21.4	115.5	34.1
HCM Lane LOS	C	F	F	F	F	C	F	D
HCM 95th-tile Q	2.2	27.2	10.9	20.6	13.6	1.8	14.2	4.8



Movement	EBL	EBT	EBR	WBL	WBT	WBR	NBL	NBT	NBR	SBL	SBT	SBR
Lane Configurations												
Traffic Volume (veh/h)	118	90	168	68	93	22	77	653	32	14	574	38
Future Volume (veh/h)	118	90	168	68	93	22	77	653	32	14	574	38
Initial Q (Qb), veh	0	0	0	0	0	0	0	0	0	0	0	0
Ped-Bike Adj(A_pbT)	1.00		0.96	1.00		0.96	1.00		0.96	1.00		0.95
Parking Bus, Adj	1.00	1.00	1.00	1.00	1.00	1.00	1.00	1.00	1.00	1.00	1.00	1.00
Work Zone On Approach		No			No			No			No	
Adj Sat Flow, veh/h/ln	1870	1870	1870	1870	1870	1870	1870	1870	1870	1870	1870	1870
Adj Flow Rate, veh/h	144	110	205	106	145	34	92	777	38	17	692	46
Peak Hour Factor	0.82	0.82	0.82	0.64	0.64	0.64	0.84	0.84	0.84	0.83	0.83	0.83
Percent Heavy Veh, %	2	2	2	2	2	2	2	2	2	2	2	2
Cap, veh/h	184	141	272	136	186	44	132	1209	59	56	1041	69
Arrive On Green	0.18	0.18	0.18	0.20	0.20	0.20	0.07	0.35	0.35	0.03	0.31	0.31
Sat Flow, veh/h	1031	788	1521	665	910	213	1781	3440	168	1781	3370	224
Grp Volume(v), veh/h	254	0	205	285	0	0	92	401	414	17	365	373
Grp Sat Flow(s),veh/h/ln	1819	0	1521	1789	0	0	1781	1777	1831	1781	1777	1817
Q Serve(g_s), s	11.1	0.0	10.7	12.6	0.0	0.0	4.2	15.8	15.8	0.8	14.9	14.9
Cycle Q Clear(g_c), s	11.1	0.0	10.7	12.6	0.0	0.0	4.2	15.8	15.8	0.8	14.9	14.9
Prop In Lane	0.57		1.00	0.37		0.12	1.00		0.09	1.00		0.12
Lane Grp Cap(c), veh/h	325	0	272	366	0	0	132	625	644	56	549	561
V/C Ratio(X)	0.78	0.00	0.75	0.78	0.00	0.00	0.70	0.64	0.64	0.31	0.66	0.67
Avail Cap(c_a), veh/h	552	0	461	607	0	0	263	822	847	177	737	754
HCM Platoon Ratio	1.00	1.00	1.00	1.00	1.00	1.00	1.00	1.00	1.00	1.00	1.00	1.00
Upstream Filter(I)	1.00	0.00	1.00	1.00	0.00	0.00	1.00	1.00	1.00	1.00	1.00	1.00
Uniform Delay (d), s/veh	32.7	0.0	32.5	31.4	0.0	0.0	37.7	22.7	22.7	39.5	25.1	25.1
Incr Delay (d2), s/veh	4.1	0.0	4.2	3.6	0.0	0.0	2.5	4.0	3.9	1.1	4.9	4.9
Initial Q Delay(d3),s/veh	0.0	0.0	0.0	0.0	0.0	0.0	0.0	0.0	0.0	0.0	0.0	0.0
%ile BackOfQ(50%),veh/ln	5.1	0.0	4.1	5.6	0.0	0.0	1.8	6.7	6.9	0.3	6.6	6.7
Unsig. Movement Delay, s/veh												
LnGrp Delay(d),s/veh	36.8	0.0	36.7	35.0	0.0	0.0	40.2	26.6	26.5	40.7	30.0	29.9
LnGrp LOS	D	A	D	D	A	A	D	C	C	D	C	C
Approach Vol, veh/h		459			285			907			755	
Approach Delay, s/veh		36.7			35.0			28.0			30.2	
Approach LOS		D			D			C			C	

Timer - Assigned Phs	1	2		4	5	6		8
Phs Duration (G+Y+Rc), s	10.9	31.2		21.8	7.3	34.7		19.6
Change Period (Y+Rc), s	* 4.7	5.4		* 4.7	* 4.7	5.4		4.7
Max Green Setting (Gmax), s	* 13	34.6		* 28	* 8.3	38.6		25.3
Max Q Clear Time (g_c+I1), s	6.2	16.9		14.6	2.8	17.8		13.1
Green Ext Time (p_c), s	0.0	8.8		1.4	0.0	10.7		1.8

Intersection Summary	
HCM 6th Ctrl Delay	31.2
HCM 6th LOS	C

Notes

* HCM 6th computational engine requires equal clearance times for the phases crossing the barrier.



Movement	EBL	EBT	EBR	WBL	WBT	WBR	NBL	NBT	NBR	SBL	SBT	SBR
Lane Configurations												
Traffic Volume (veh/h)	189	138	370	51	128	64	275	855	53	34	546	108
Future Volume (veh/h)	189	138	370	51	128	64	275	855	53	34	546	108
Initial Q (Qb), veh	0	0	0	0	0	0	0	0	0	0	0	0
Ped-Bike Adj(A_pbT)	1.00		0.98	1.00		0.97	1.00		0.96	1.00		0.97
Parking Bus, Adj	1.00	1.00	1.00	1.00	1.00	1.00	1.00	1.00	1.00	1.00	1.00	1.00
Work Zone On Approach		No			No			No			No	
Adj Sat Flow, veh/h/ln	1870	1870	1870	1870	1870	1870	1870	1870	1870	1870	1870	1870
Adj Flow Rate, veh/h	262	192	514	60	151	75	367	1140	71	47	758	150
Peak Hour Factor	0.72	0.72	0.72	0.85	0.85	0.85	0.75	0.75	0.75	0.72	0.72	0.72
Percent Heavy Veh, %	2	2	2	2	2	2	2	2	2	2	2	2
Cap, veh/h	231	772	638	92	195	88	320	1352	84	61	745	147
Arrive On Green	0.13	0.41	0.41	0.23	0.23	0.23	0.18	0.40	0.40	0.03	0.25	0.25
Sat Flow, veh/h	1781	1870	1546	227	834	377	1781	3388	211	1781	2938	581
Grp Volume(v), veh/h	262	192	514	286	0	0	367	597	614	47	458	450
Grp Sat Flow(s),veh/h/ln	1781	1870	1546	1439	0	0	1781	1777	1822	1781	1777	1743
Q Serve(g_s), s	14.7	7.6	33.2	15.8	0.0	0.0	20.4	34.6	34.7	3.0	28.8	28.8
Cycle Q Clear(g_c), s	14.7	7.6	33.2	21.2	0.0	0.0	20.4	34.6	34.7	3.0	28.8	28.8
Prop In Lane	1.00		1.00	0.21		0.26	1.00		0.12	1.00		0.33
Lane Grp Cap(c), veh/h	231	772	638	375	0	0	320	709	727	61	451	442
V/C Ratio(X)	1.14	0.25	0.81	0.76	0.00	0.00	1.15	0.84	0.84	0.78	1.02	1.02
Avail Cap(c_a), veh/h	231	878	726	452	0	0	320	709	727	80	451	442
HCM Platoon Ratio	1.00	1.00	1.00	1.00	1.00	1.00	1.00	1.00	1.00	1.00	1.00	1.00
Upstream Filter(I)	1.00	1.00	1.00	1.00	0.00	0.00	1.00	1.00	1.00	1.00	1.00	1.00
Uniform Delay (d), s/veh	49.4	21.8	29.3	40.9	0.0	0.0	46.6	30.9	30.9	54.4	42.4	42.4
Incr Delay (d2), s/veh	101.0	0.1	5.1	4.8	0.0	0.0	96.4	9.4	9.3	20.6	46.8	47.3
Initial Q Delay(d3),s/veh	0.0	0.0	0.0	0.0	0.0	0.0	0.0	0.0	0.0	0.0	0.0	0.0
%ile BackOfQ(50%),veh/ln	18.0	3.4	12.9	8.1	0.0	0.0	17.5	16.3	16.7	1.7	18.3	18.0
Unsig. Movement Delay, s/veh												
LnGrp Delay(d),s/veh	150.4	21.9	34.4	45.7	0.0	0.0	143.0	40.3	40.2	75.0	89.2	89.7
LnGrp LOS	F	C	C	D	A	A	F	D	D	E	F	F
Approach Vol, veh/h		968			286			1578			955	
Approach Delay, s/veh		63.3			45.7			64.1			88.8	
Approach LOS		E			D			E			F	

Timer - Assigned Phs	1	2		4	5	6	7	8
Phs Duration (G+Y+Rc), s	9.5	51.0		53.1	26.0	34.5	20.3	32.8
Change Period (Y+Rc), s	5.6	5.7		6.2	5.6	5.7	5.6	6.2
Max Green Setting (Gmax), s	5.1	44.1		53.3	20.4	28.8	14.7	33.0
Max Q Clear Time (g_c+I1), s	5.0	36.7		35.2	22.4	30.8	16.7	23.2
Green Ext Time (p_c), s	0.0	5.3		1.7	0.0	0.0	0.0	1.0

Intersection Summary		
HCM 6th Ctrl Delay		68.8
HCM 6th LOS		E



Movement	EBL	EBT	EBR	WBL	WBT	WBR	NBL	NBT	NBR	SBL	SBT	SBR
Lane Configurations												
Traffic Volume (veh/h)	0	0	0	248	1	356	168	597	0	0	824	111
Future Volume (veh/h)	0	0	0	248	1	356	168	597	0	0	824	111
Initial Q (Qb), veh				0	0	0	0	0	0	0	0	0
Ped-Bike Adj(A_pbT)				1.00		0.97	1.00		1.00	1.00		0.96
Parking Bus, Adj				1.00	1.00	1.00	1.00	1.00	1.00	1.00	1.00	1.00
Work Zone On Approach					No			No			No	
Adj Sat Flow, veh/h/ln				1870	1870	1870	1870	1870	0	0	1870	1870
Adj Flow Rate, veh/h				318	1	456	179	635	0	0	958	129
Peak Hour Factor				0.78	0.78	0.78	0.94	0.94	0.94	0.86	0.86	0.86
Percent Heavy Veh, %				2	2	2	2	2	0	0	2	2
Cap, veh/h				586	2	508	211	2019	0	0	1263	170
Arrive On Green				0.33	0.33	0.33	0.12	0.57	0.00	0.00	0.40	0.40
Sat Flow, veh/h				1776	6	1541	1781	3647	0	0	3222	421
Grp Volume(v), veh/h				319	0	456	179	635	0	0	544	543
Grp Sat Flow(s),veh/h/ln				1782	0	1541	1781	1777	0	0	1777	1773
Q Serve(g_s), s				15.0	0.0	28.9	10.1	9.7	0.0	0.0	27.0	27.0
Cycle Q Clear(g_c), s				15.0	0.0	28.9	10.1	9.7	0.0	0.0	27.0	27.0
Prop In Lane				1.00		1.00	1.00		0.00	0.00		0.24
Lane Grp Cap(c), veh/h				587	0	508	211	2019	0	0	717	716
V/C Ratio(X)				0.54	0.00	0.90	0.85	0.31	0.00	0.00	0.76	0.76
Avail Cap(c_a), veh/h				675	0	584	335	2443	0	0	806	804
HCM Platoon Ratio				1.00	1.00	1.00	1.00	1.00	1.00	1.00	1.00	1.00
Upstream Filter(I)				1.00	0.00	1.00	1.00	1.00	0.00	0.00	1.00	1.00
Uniform Delay (d), s/veh				28.1	0.0	32.8	44.4	11.7	0.0	0.0	26.3	26.3
Incr Delay (d2), s/veh				0.8	0.0	15.3	6.3	0.3	0.0	0.0	6.4	6.4
Initial Q Delay(d3),s/veh				0.0	0.0	0.0	0.0	0.0	0.0	0.0	0.0	0.0
%ile BackOfQ(50%),veh/ln				6.4	0.0	12.7	4.7	3.6	0.0	0.0	12.0	12.0
Unsig. Movement Delay, s/veh												
LnGrp Delay(d),s/veh				28.9	0.0	48.0	50.7	12.0	0.0	0.0	32.7	32.7
LnGrp LOS				C	A	D	D	B	A	A	C	C
Approach Vol, veh/h					775			814			1087	
Approach Delay, s/veh					40.1			20.5			32.7	
Approach LOS					D			C			C	

Timer - Assigned Phs	1	2		4		6
Phs Duration (G+Y+Rc), s	16.9	46.9		39.0		63.7
Change Period (Y+Rc), s	* 4.7	5.4		5.1		5.4
Max Green Setting (Gmax), s	13	46.6		38.9		70.6
Max Q Clear Time (g_c+I1), s	12.1	29.0		30.9		11.7
Green Ext Time (p_c), s	0.1	12.4		2.5		13.0

Intersection Summary	
HCM 6th Ctrl Delay	31.2
HCM 6th LOS	C

Notes

* HCM 6th computational engine requires equal clearance times for the phases crossing the barrier.



Movement	EBL	EBT	EBR	WBL	WBT	WBR	NBL	NBT	NBR	SBL	SBT	SBR
Lane Configurations												
Traffic Volume (veh/h)	86	1	247	0	0	0	0	678	180	275	797	0
Future Volume (veh/h)	86	1	247	0	0	0	0	678	180	275	797	0
Initial Q (Qb), veh	0	0	0				0	0	0	0	0	0
Ped-Bike Adj(A_pbT)	1.00		0.97				1.00		0.95	1.00		1.00
Parking Bus, Adj	1.00	1.00	1.00				1.00	1.00	1.00	1.00	1.00	1.00
Work Zone On Approach		No						No			No	
Adj Sat Flow, veh/h/ln	1870	1870	1870				0	1870	1870	1870	1870	0
Adj Flow Rate, veh/h	143	2	412				0	762	202	316	916	0
Peak Hour Factor	0.60	0.60	0.60				0.89	0.89	0.89	0.87	0.87	0.87
Percent Heavy Veh, %	2	2	2				0	2	2	2	2	0
Cap, veh/h	155	2	445				0	994	421	349	1854	0
Arrive On Green	0.38	0.38	0.38				0.00	0.28	0.28	0.20	0.52	0.00
Sat Flow, veh/h	411	6	1184				0	3647	1505	1781	3647	0
Grp Volume(v), veh/h	557	0	0				0	762	202	316	916	0
Grp Sat Flow(s),veh/h/ln	1600	0	0				0	1777	1505	1781	1777	0
Q Serve(g_s), s	34.2	0.0	0.0				0.0	20.2	11.5	17.8	17.1	0.0
Cycle Q Clear(g_c), s	34.2	0.0	0.0				0.0	20.2	11.5	17.8	17.1	0.0
Prop In Lane	0.26		0.74				0.00		1.00	1.00		0.00
Lane Grp Cap(c), veh/h	602	0	0				0	994	421	349	1854	0
V/C Ratio(X)	0.93	0.00	0.00				0.00	0.77	0.48	0.90	0.49	0.00
Avail Cap(c_a), veh/h	685	0	0				0	1089	461	508	2265	0
HCM Platoon Ratio	1.00	1.00	1.00				1.00	1.00	1.00	1.00	1.00	1.00
Upstream Filter(I)	1.00	0.00	0.00				0.00	1.00	1.00	1.00	1.00	0.00
Uniform Delay (d), s/veh	30.7	0.0	0.0				0.0	33.9	30.8	40.4	15.8	0.0
Incr Delay (d2), s/veh	17.3	0.0	0.0				0.0	4.9	3.1	11.7	0.7	0.0
Initial Q Delay(d3),s/veh	0.0	0.0	0.0				0.0	0.0	0.0	0.0	0.0	0.0
%ile BackOfQ(50%),veh/ln	15.6	0.0	0.0				0.0	9.0	4.4	8.7	6.6	0.0
Unsig. Movement Delay, s/veh												
LnGrp Delay(d),s/veh	48.0	0.0	0.0				0.0	38.9	33.8	52.1	16.6	0.0
LnGrp LOS	D	A	A				A	D	C	D	B	A
Approach Vol, veh/h		557						964			1232	
Approach Delay, s/veh		48.0						37.8			25.7	
Approach LOS		D						D			C	

Timer - Assigned Phs		2			5	6		8				
Phs Duration (G+Y+Rc), s		59.0			24.8	34.2		43.8				
Change Period (Y+Rc), s		5.4			* 4.7	5.4		5.1				
Max Green Setting (Gmax), s		65.5			* 29	31.5		44.0				
Max Q Clear Time (g_c+I1), s		19.1			19.8	22.2		36.2				
Green Ext Time (p_c), s		19.7			0.3	6.6		2.4				

Intersection Summary												
HCM 6th Ctrl Delay			34.4									
HCM 6th LOS			C									

Notes

* HCM 6th computational engine requires equal clearance times for the phases crossing the barrier.



Movement	EBL	EBT	EBR	WBL	WBT	WBR	NBL	NBT	NBR	SBL	SBT	SBR
Lane Configurations												
Traffic Volume (veh/h)	0	0	0	105	2	144	0	531	184	0	408	97
Future Volume (veh/h)	0	0	0	105	2	144	0	531	184	0	408	97
Initial Q (Qb), veh				0	0	0	0	0	0	0	0	0
Ped-Bike Adj(A_pbT)				1.00		0.97	1.00		0.96	1.00		0.96
Parking Bus, Adj				1.00	1.00	1.00	1.00	1.00	1.00	1.00	1.00	1.00
Work Zone On Approach					No			No			No	
Adj Sat Flow, veh/h/ln				1870	1870	1870	0	1870	1870	0	1870	1870
Adj Flow Rate, veh/h				142	3	195	0	617	214	0	492	117
Peak Hour Factor				0.74	0.74	0.74	0.86	0.86	0.86	0.83	0.83	0.83
Percent Heavy Veh, %				2	2	2	0	2	2	0	2	2
Cap, veh/h				422	9	370	0	1432	612	0	1656	381
Arrive On Green				0.24	0.24	0.24	0.00	0.40	0.40	0.00	0.40	0.40
Sat Flow, veh/h				1746	37	1532	0	3647	1520	0	4279	945
Grp Volume(v), veh/h				145	0	195	0	617	214	0	405	204
Grp Sat Flow(s),veh/h/ln				1783	0	1532	0	1777	1520	0	1702	1652
Q Serve(g_s), s				2.4	0.0	3.9	0.0	4.4	3.4	0.0	2.8	3.0
Cycle Q Clear(g_c), s				2.4	0.0	3.9	0.0	4.4	3.4	0.0	2.8	3.0
Prop In Lane				0.98		1.00	0.00		1.00	0.00		0.57
Lane Grp Cap(c), veh/h				431	0	370	0	1432	612	0	1371	666
V/C Ratio(X)				0.34	0.00	0.53	0.00	0.43	0.35	0.00	0.29	0.31
Avail Cap(c_a), veh/h				2430	0	2088	0	6025	2577	0	5772	2801
HCM Platoon Ratio				1.00	1.00	1.00	1.00	1.00	1.00	1.00	1.00	1.00
Upstream Filter(I)				1.00	0.00	1.00	0.00	1.00	1.00	0.00	1.00	1.00
Uniform Delay (d), s/veh				11.0	0.0	11.6	0.0	7.6	7.3	0.0	7.1	7.2
Incr Delay (d2), s/veh				0.5	0.0	1.2	0.0	0.2	0.3	0.0	0.1	0.3
Initial Q Delay(d3),s/veh				0.0	0.0	0.0	0.0	0.0	0.0	0.0	0.0	0.0
%ile BackOfQ(50%),veh/ln				0.8	0.0	1.1	0.0	1.0	0.7	0.0	0.6	0.6
Unsig. Movement Delay, s/veh												
LnGrp Delay(d),s/veh				11.5	0.0	12.7	0.0	7.8	7.6	0.0	7.2	7.4
LnGrp LOS				B	A	B	A	A	A	A	A	A
Approach Vol, veh/h					340			831			609	
Approach Delay, s/veh					12.2			7.7			7.3	
Approach LOS					B			A			A	

Timer - Assigned Phs	2		6		8			
Phs Duration (G+Y+Rc), s	20.6		20.6		14.6			
Change Period (Y+Rc), s	6.4		6.4		6.1			
Max Green Setting (Gmax), s	59.6		59.6		47.9			
Max Q Clear Time (g_c+I1), s	6.4		5.0		5.9			
Green Ext Time (p_c), s	5.4		4.2		1.6			

Intersection Summary		
HCM 6th Ctrl Delay	8.4	
HCM 6th LOS	A	



Movement	EBL	EBT	EBR	WBL	WBT	WBR	NBL	NBT	NBR	SBL	SBT	SBR
Lane Configurations												
Traffic Volume (veh/h)	98	2	196	0	0	0	0	618	61	82	429	0
Future Volume (veh/h)	98	2	196	0	0	0	0	618	61	82	429	0
Initial Q (Qb), veh	0	0	0				0	0	0	0	0	0
Ped-Bike Adj(A_pbT)	1.00		0.94				1.00		0.96	1.00		1.00
Parking Bus, Adj	1.00	1.00	1.00				1.00	1.00	1.00	1.00	1.00	1.00
Work Zone On Approach		No						No			No	
Adj Sat Flow, veh/h/ln	1870	1870	1870				0	1870	1870	1870	1870	0
Adj Flow Rate, veh/h	118	2	236				0	719	71	112	588	0
Peak Hour Factor	0.83	0.83	0.83				0.86	0.86	0.86	0.73	0.73	0.73
Percent Heavy Veh, %	2	2	2				0	2	2	2	2	0
Cap, veh/h	337	6	501				0	1236	527	149	1952	0
Arrive On Green	0.19	0.19	0.19				0.00	0.35	0.35	0.08	0.55	0.00
Sat Flow, veh/h	1753	30	2610				0	3647	1514	1781	3647	0
Grp Volume(v), veh/h	120	0	236				0	719	71	112	588	0
Grp Sat Flow(s),veh/h/ln	1783	0	1305				0	1777	1514	1781	1777	0
Q Serve(g_s), s	2.8	0.0	3.9				0.0	8.0	1.6	3.0	4.3	0.0
Cycle Q Clear(g_c), s	2.8	0.0	3.9				0.0	8.0	1.6	3.0	4.3	0.0
Prop In Lane	0.98		1.00				0.00		1.00	1.00		0.00
Lane Grp Cap(c), veh/h	342	0	501				0	1236	527	149	1952	0
V/C Ratio(X)	0.35	0.00	0.47				0.00	0.58	0.13	0.75	0.30	0.00
Avail Cap(c_a), veh/h	1398	0	2047				0	3206	1366	748	5118	0
HCM Platoon Ratio	1.00	1.00	1.00				1.00	1.00	1.00	1.00	1.00	1.00
Upstream Filter(I)	1.00	0.00	1.00				0.00	1.00	1.00	1.00	1.00	0.00
Uniform Delay (d), s/veh	16.9	0.0	17.3				0.0	12.9	10.8	21.7	5.9	0.0
Incr Delay (d2), s/veh	0.6	0.0	0.7				0.0	0.4	0.1	7.5	0.1	0.0
Initial Q Delay(d3),s/veh	0.0	0.0	0.0				0.0	0.0	0.0	0.0	0.0	0.0
%ile BackOfQ(50%),veh/ln	1.1	0.0	1.1				0.0	2.5	0.4	1.4	1.0	0.0
Unsig. Movement Delay, s/veh												
LnGrp Delay(d),s/veh	17.5	0.0	18.0				0.0	13.3	10.9	29.2	6.0	0.0
LnGrp LOS	B	A	B				A	B	B	C	A	A
Approach Vol, veh/h		356						790			700	
Approach Delay, s/veh		17.9						13.1			9.7	
Approach LOS		B						B			A	

Timer - Assigned Phs	1	2	4	6
Phs Duration (G+Y+Rc), s	9.7	23.2	15.4	32.9
Change Period (Y+Rc), s	* 5.7	6.4	6.1	6.4
Max Green Setting (Gmax), s	* 4.0	43.6	37.9	69.6
Max Q Clear Time (g_c+I1), s	5.0	10.0	5.9	6.3
Green Ext Time (p_c), s	0.2	5.5	1.8	4.2

Intersection Summary	
HCM 6th Ctrl Delay	12.7
HCM 6th LOS	B

Notes

* HCM 6th computational engine requires equal clearance times for the phases crossing the barrier.



Movement	EBL	EBT	EBR	WBL	WBT	WBR	NBL	NBT	NBR	SBL	SBT	SBR
Lane Configurations												
Traffic Volume (veh/h)	81	102	38	2	102	68	63	91	1	134	75	36
Future Volume (veh/h)	81	102	38	2	102	68	63	91	1	134	75	36
Initial Q (Qb), veh	0	0	0	0	0	0	0	0	0	0	0	0
Ped-Bike Adj(A_pbT)	1.00		0.96	1.00		0.94	1.00		0.98	1.00		0.96
Parking Bus, Adj	1.00	1.00	1.00	1.00	1.00	1.00	1.00	1.00	1.00	1.00	1.00	1.00
Work Zone On Approach		No			No			No			No	
Adj Sat Flow, veh/h/ln	1870	1870	1870	1870	1870	1870	1870	1870	1870	1870	1870	1870
Adj Flow Rate, veh/h	103	129	48	3	136	91	88	126	1	248	139	67
Peak Hour Factor	0.79	0.79	0.79	0.75	0.75	0.75	0.72	0.72	0.72	0.54	0.54	0.54
Percent Heavy Veh, %	2	2	2	2	2	2	2	2	2	2	2	2
Cap, veh/h	132	341	277	7	209	167	113	1431	623	256	1132	513
Arrive On Green	0.07	0.18	0.18	0.00	0.11	0.11	0.06	0.40	0.40	0.14	0.48	0.48
Sat Flow, veh/h	1781	1870	1522	1781	1870	1494	1781	3554	1546	1781	2345	1062
Grp Volume(v), veh/h	103	129	48	3	136	91	88	126	1	248	103	103
Grp Sat Flow(s),veh/h/ln	1781	1870	1522	1781	1870	1494	1781	1777	1546	1781	1777	1630
Q Serve(g_s), s	4.1	4.4	1.9	0.1	5.0	4.2	3.5	1.6	0.0	10.0	2.3	2.5
Cycle Q Clear(g_c), s	4.1	4.4	1.9	0.1	5.0	4.2	3.5	1.6	0.0	10.0	2.3	2.5
Prop In Lane	1.00		1.00	1.00		1.00	1.00		1.00	1.00		0.65
Lane Grp Cap(c), veh/h	132	341	277	7	209	167	113	1431	623	256	858	787
V/C Ratio(X)	0.78	0.38	0.17	0.42	0.65	0.54	0.78	0.09	0.00	0.97	0.12	0.13
Avail Cap(c_a), veh/h	258	929	756	123	787	629	241	1431	623	256	858	787
HCM Platoon Ratio	1.00	1.00	1.00	1.00	1.00	1.00	1.00	1.00	1.00	1.00	1.00	1.00
Upstream Filter(I)	1.00	1.00	1.00	1.00	1.00	1.00	1.00	1.00	1.00	1.00	1.00	1.00
Uniform Delay (d), s/veh	33.0	26.0	25.0	36.0	30.8	30.4	33.4	13.4	12.9	30.9	10.3	10.4
Incr Delay (d2), s/veh	3.7	0.7	0.3	13.6	3.4	2.7	4.2	0.1	0.0	47.7	0.3	0.3
Initial Q Delay(d3),s/veh	0.0	0.0	0.0	0.0	0.0	0.0	0.0	0.0	0.0	0.0	0.0	0.0
%ile BackOfQ(50%),veh/ln	1.9	1.9	0.7	0.1	2.4	1.6	1.6	0.6	0.0	7.5	0.9	0.9
Unsig. Movement Delay, s/veh												
LnGrp Delay(d),s/veh	36.7	26.7	25.3	49.6	34.2	33.2	37.7	13.5	12.9	78.6	10.6	10.7
LnGrp LOS	D	C	C	D	C	C	D	B	B	E	B	B
Approach Vol, veh/h		280			230			215			454	
Approach Delay, s/veh		30.1			34.0			23.4			47.8	
Approach LOS		C			C			C			D	

Timer - Assigned Phs	1	2	3	4	5	6	7	8
Phs Duration (G+Y+Rc), s	9.2	40.1	10.0	13.2	15.0	34.3	4.9	18.3
Change Period (Y+Rc), s	4.6	5.1	4.6	5.1	4.6	5.1	4.6	5.1
Max Green Setting (Gmax), s	4.6	29.8	10.5	30.5	10.4	29.2	5.0	36.0
Max Q Clear Time (g_c+I1), s	6.1	4.5	6.1	7.0	12.0	3.6	2.1	6.4
Green Ext Time (p_c), s	0.0	1.7	0.0	1.0	0.0	1.0	0.0	0.9

Intersection Summary	
HCM 6th Ctrl Delay	36.5
HCM 6th LOS	D



Movement	EBL	EBT	EBR	WBL	WBT	WBR	NBL	NBT	NBR	SBL	SBT	SBR
Lane Configurations												
Traffic Volume (veh/h)	159	86	79	49	69	196	74	351	70	410	454	211
Future Volume (veh/h)	159	86	79	49	69	196	74	351	70	410	454	211
Initial Q (Qb), veh	0	0	0	0	0	0	0	0	0	0	0	0
Ped-Bike Adj(A_pbT)	1.00		0.96	1.00		0.96	1.00		0.96	1.00		0.97
Parking Bus, Adj	1.00	1.00	1.00	1.00	1.00	1.00	1.00	1.00	1.00	1.00	1.00	1.00
Work Zone On Approach		No			No			No			No	
Adj Sat Flow, veh/h/ln	1870	1870	1870	1870	1870	1870	1870	1870	1870	1870	1870	1870
Adj Flow Rate, veh/h	209	113	104	59	83	236	86	408	81	512	568	264
Peak Hour Factor	0.76	0.76	0.76	0.83	0.83	0.83	0.86	0.86	0.86	0.80	0.80	0.80
Percent Heavy Veh, %	2	2	2	2	2	2	2	2	2	2	2	2
Cap, veh/h	302	317	258	293	308	598	119	615	121	391	861	399
Arrive On Green	0.17	0.17	0.17	0.16	0.16	0.16	0.07	0.21	0.21	0.22	0.37	0.37
Sat Flow, veh/h	1781	1870	1518	1781	1870	1517	1781	2940	578	1781	2335	1083
Grp Volume(v), veh/h	209	113	104	59	83	236	86	245	244	512	432	400
Grp Sat Flow(s),veh/h/ln	1781	1870	1518	1781	1870	1517	1781	1777	1741	1781	1777	1641
Q Serve(g_s), s	12.4	6.0	6.8	3.2	4.3	12.7	5.3	14.2	14.4	24.6	22.7	22.8
Cycle Q Clear(g_c), s	12.4	6.0	6.8	3.2	4.3	12.7	5.3	14.2	14.4	24.6	22.7	22.8
Prop In Lane	1.00		1.00	1.00		1.00	1.00		0.33	1.00		0.66
Lane Grp Cap(c), veh/h	302	317	258	293	308	598	119	372	364	391	655	605
V/C Ratio(X)	0.69	0.36	0.40	0.20	0.27	0.39	0.73	0.66	0.67	1.31	0.66	0.66
Avail Cap(c_a), veh/h	525	551	448	573	601	836	204	475	465	391	676	625
HCM Platoon Ratio	1.00	1.00	1.00	1.00	1.00	1.00	1.00	1.00	1.00	1.00	1.00	1.00
Upstream Filter(I)	1.00	1.00	1.00	1.00	1.00	1.00	1.00	1.00	1.00	1.00	1.00	1.00
Uniform Delay (d), s/veh	43.7	41.1	41.4	40.4	40.9	25.1	51.3	40.6	40.7	43.7	29.5	29.5
Incr Delay (d2), s/veh	4.0	1.0	1.4	0.1	0.2	0.2	3.1	7.1	7.6	156.0	4.4	4.8
Initial Q Delay(d3),s/veh	0.0	0.0	0.0	0.0	0.0	0.0	0.0	0.0	0.0	0.0	0.0	0.0
%ile BackOfQ(50%),veh/ln	5.7	2.8	2.6	1.4	2.0	4.4	2.4	6.8	6.8	27.5	10.1	9.4
Unsig. Movement Delay, s/veh												
LnGrp Delay(d),s/veh	47.7	42.0	42.9	40.5	41.0	25.3	54.4	47.7	48.3	199.7	33.9	34.3
LnGrp LOS	D	D	D	D	D	C	D	D	D	F	C	C
Approach Vol, veh/h		426			378			575			1344	
Approach Delay, s/veh		45.0			31.1			49.0			97.2	
Approach LOS		D			C			D			F	

Timer - Assigned Phs	1	2		4	5	6		8
Phs Duration (G+Y+Rc), s	12.1	48.6		24.8	30.0	30.7		26.4
Change Period (Y+Rc), s	* 4.7	* 7.3		6.4	5.4	7.3		7.4
Max Green Setting (Gmax), s	* 13	* 43		36.0	24.6	29.9		33.0
Max Q Clear Time (g_c+I1), s	17.3	24.8		14.7	26.6	16.4		14.4
Green Ext Time (p_c), s	0.0	10.1		0.7	0.0	4.9		2.2

Intersection Summary	
HCM 6th Ctrl Delay	69.7
HCM 6th LOS	E

Notes

* HCM 6th computational engine requires equal clearance times for the phases crossing the barrier.

Intersection	
Int Delay, s/veh	1.1

Movement	EBL	EBR	NBL	NBT	SBT	SBR
Lane Configurations						
Traffic Vol, veh/h	4	107	110	726	419	12
Future Vol, veh/h	4	107	110	726	419	12
Conflicting Peds, #/hr	10	10	10	0	0	10
Sign Control	Free	Free	Free	Free	Stop	Stop
RT Channelized	-	None	-	None	-	None
Storage Length	0	-	-	-	-	-
Veh in Median Storage, #	2	-	-	0	0	-
Grade, %	0	-	-	0	0	-
Peak Hour Factor	63	63	70	70	75	75
Heavy Vehicles, %	2	2	2	2	2	2
Mvmt Flow	6	170	157	1037	559	16

Major/Minor	Major1		Minor2	
Conflicting Flow All	10	0	1361	20
Stage 1	-	-	10	-
Stage 2	-	-	1351	-
Critical Hdwy	4.14	-	6.54	6.94
Critical Hdwy Stg 1	-	-	-	-
Critical Hdwy Stg 2	-	-	5.54	-
Follow-up Hdwy	2.22	-	4.02	3.32
Pot Cap-1 Maneuver	1608	-	~ 147	1053
Stage 1	-	-	-	-
Stage 2	-	-	~ 217	-
Platoon blocked, %		-		
Mov Cap-1 Maneuver	1593	-	0	1033
Mov Cap-2 Maneuver	-	-	0	-
Stage 1	-	-	0	-
Stage 2	-	-	0	-

Approach	NB	SB
HCM Control Delay, s	1.6	
HCM LOS		-

Minor Lane/Major Mvmt	NBL	NBT	SBLn1	SBLn2
Capacity (veh/h)	1593	-	-	1033
HCM Lane V/C Ratio	0.099	-	-	0.286
HCM Control Delay (s)	7.5	0.7	-	9.9
HCM Lane LOS	A	A	-	A
HCM 95th %tile Q(veh)	0.3	-	-	1.2

Notes			
~: Volume exceeds capacity	$: Delay exceeds 300s	+: Computation Not Defined	*: All major volume in platoon

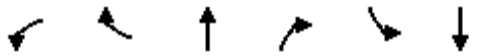

Movement	WBL	WBR	NBT	NBR	SBL	SBT
Lane Configurations						
Traffic Volume (veh/h)	13	75	462	59	84	248
Future Volume (veh/h)	13	75	462	59	84	248
Initial Q (Qb), veh	0	0	0	0	0	0
Ped-Bike Adj(A_pbT)	1.00	1.00		0.96	1.00	
Parking Bus, Adj	1.00	1.00	1.00	1.00	1.00	1.00
Work Zone On Approach	No		No			No
Adj Sat Flow, veh/h/ln	1870	1870	1870	1870	1870	1870
Adj Flow Rate, veh/h	14	82	592	76	98	288
Peak Hour Factor	0.91	0.91	0.78	0.78	0.86	0.86
Percent Heavy Veh, %	2	2	2	2	2	2
Cap, veh/h	154	137	1385	177	207	1207
Arrive On Green	0.09	0.09	0.44	0.44	0.12	0.65
Sat Flow, veh/h	1781	1585	3245	403	1781	1870
Grp Volume(v), veh/h	14	82	333	335	98	288
Grp Sat Flow(s),veh/h/ln	1781	1585	1777	1778	1781	1870
Q Serve(g_s), s	0.4	2.6	6.8	6.8	2.7	3.4
Cycle Q Clear(g_c), s	0.4	2.6	6.8	6.8	2.7	3.4
Prop In Lane	1.00	1.00		0.23	1.00	
Lane Grp Cap(c), veh/h	154	137	781	781	207	1207
V/C Ratio(X)	0.09	0.60	0.43	0.43	0.47	0.24
Avail Cap(c_a), veh/h	948	844	2456	2458	1068	3925
HCM Platoon Ratio	1.00	1.00	1.00	1.00	1.00	1.00
Upstream Filter(I)	1.00	1.00	1.00	1.00	1.00	1.00
Uniform Delay (d), s/veh	22.0	23.0	10.1	10.1	21.6	3.9
Incr Delay (d2), s/veh	0.3	4.2	1.3	1.4	0.6	0.4
Initial Q Delay(d3),s/veh	0.0	0.0	0.0	0.0	0.0	0.0
%ile BackOfQ(50%),veh/ln	0.2	0.2	2.2	2.3	1.0	0.7
Unsig. Movement Delay, s/veh						
LnGrp Delay(d),s/veh	22.2	27.1	11.4	11.5	22.2	4.2
LnGrp LOS	C	C	B	B	C	A
Approach Vol, veh/h	96		668			386
Approach Delay, s/veh	26.4		11.5			8.8
Approach LOS	C		B			A

Timer - Assigned Phs		2		4	5	6
Phs Duration (G+Y+Rc), s		41.5		10.7	10.8	30.7
Change Period (Y+Rc), s		* 7.8		6.2	* 4.7	7.8
Max Green Setting (Gmax), s		* 1.1E2		27.8	* 31	72.2
Max Q Clear Time (g_c+I1), s		5.4		4.6	4.7	8.8
Green Ext Time (p_c), s		5.0		0.2	0.1	13.2

Intersection Summary	
HCM 6th Ctrl Delay	11.8
HCM 6th LOS	B

Notes

* HCM 6th computational engine requires equal clearance times for the phases crossing the barrier.

Intersection	
Int Delay, s/veh	2.6

Movement	EBT	EBR	WBL	WBT	NBL	NBR
Lane Configurations						
Traffic Vol, veh/h	86	15	13	150	28	47
Future Vol, veh/h	86	15	13	150	28	47
Conflicting Peds, #/hr	0	10	10	0	10	10
Sign Control	Free	Free	Free	Free	Stop	Stop
RT Channelized	-	None	-	None	-	None
Storage Length	-	-	-	-	0	-
Veh in Median Storage, #	0	-	-	0	0	-
Grade, %	0	-	-	0	0	-
Peak Hour Factor	91	91	57	57	70	70
Heavy Vehicles, %	2	2	2	2	2	2
Mvmt Flow	95	16	23	263	40	67

Major/Minor	Major1		Major2		Minor1	
Conflicting Flow All	0	0	121	0	432	123
Stage 1	-	-	-	-	113	-
Stage 2	-	-	-	-	319	-
Critical Hdwy	-	-	4.12	-	6.42	6.22
Critical Hdwy Stg 1	-	-	-	-	5.42	-
Critical Hdwy Stg 2	-	-	-	-	5.42	-
Follow-up Hdwy	-	-	2.218	-	3.518	3.318
Pot Cap-1 Maneuver	-	-	1467	-	581	928
Stage 1	-	-	-	-	912	-
Stage 2	-	-	-	-	737	-
Platoon blocked, %	-	-		-		
Mov Cap-1 Maneuver	-	-	1453	-	558	910
Mov Cap-2 Maneuver	-	-	-	-	558	-
Stage 1	-	-	-	-	903	-
Stage 2	-	-	-	-	716	-

Approach	EB	WB	NB
HCM Control Delay, s	0	0.6	10.7
HCM LOS			B

Minor Lane/Major Mvmt	NBLn1	EBT	EBR	WBL	WBT
Capacity (veh/h)	737	-	-	1453	-
HCM Lane V/C Ratio	0.145	-	-	0.016	-
HCM Control Delay (s)	10.7	-	-	7.5	0
HCM Lane LOS	B	-	-	A	A
HCM 95th %tile Q(veh)	0.5	-	-	0	-

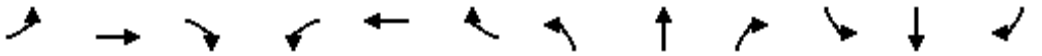

Movement	EBL	EBT	EBR	WBL	WBT	WBR	NBL	NBT	NBR	SBL	SBT	SBR
Lane Configurations												
Traffic Volume (veh/h)	51	52	30	5	54	92	34	480	13	108	253	79
Future Volume (veh/h)	51	52	30	5	54	92	34	480	13	108	253	79
Initial Q (Qb), veh	0	0	0	0	0	0	0	0	0	0	0	0
Ped-Bike Adj(A_pbT)	1.00		0.97	1.00		1.00	1.00		0.97	1.00		0.97
Parking Bus, Adj	1.00	1.00	1.00	1.00	1.00	1.00	1.00	1.00	1.00	1.00	1.00	1.00
Work Zone On Approach		No			No			No			No	
Adj Sat Flow, veh/h/ln	1870	1870	1870	1870	1870	1870	1870	1870	1870	1870	1870	1870
Adj Flow Rate, veh/h	54	55	32	6	68	0	40	565	15	140	329	103
Peak Hour Factor	0.95	0.95	0.95	0.80	0.80	0.80	0.85	0.85	0.85	0.77	0.77	0.77
Percent Heavy Veh, %	2	2	2	2	2	2	2	2	2	2	2	2
Cap, veh/h	91	531	281	14	699		74	1017	440	187	929	285
Arrive On Green	0.05	0.24	0.24	0.01	0.20	0.00	0.04	0.29	0.29	0.10	0.35	0.35
Sat Flow, veh/h	1781	2217	1171	1781	3554	1585	1781	3554	1538	1781	2658	816
Grp Volume(v), veh/h	54	43	44	6	68	0	40	565	15	140	218	214
Grp Sat Flow(s),veh/h/ln	1781	1777	1612	1781	1777	1585	1781	1777	1538	1781	1777	1697
Q Serve(g_s), s	1.6	1.0	1.2	0.2	0.9	0.0	1.2	7.5	0.4	4.2	5.1	5.2
Cycle Q Clear(g_c), s	1.6	1.0	1.2	0.2	0.9	0.0	1.2	7.5	0.4	4.2	5.1	5.2
Prop In Lane	1.00		0.73	1.00		1.00	1.00		1.00	1.00		0.48
Lane Grp Cap(c), veh/h	91	426	386	14	699		74	1017	440	187	621	593
V/C Ratio(X)	0.60	0.10	0.11	0.42	0.10		0.54	0.56	0.03	0.75	0.35	0.36
Avail Cap(c_a), veh/h	493	1435	1302	237	2359		397	3145	1361	910	2084	1991
HCM Platoon Ratio	1.00	1.00	1.00	1.00	1.00	1.00	1.00	1.00	1.00	1.00	1.00	1.00
Upstream Filter(I)	1.00	1.00	1.00	1.00	1.00	0.00	1.00	1.00	1.00	1.00	1.00	1.00
Uniform Delay (d), s/veh	25.8	16.5	16.5	27.4	18.3	0.0	26.1	16.8	14.3	24.2	13.4	13.5
Incr Delay (d2), s/veh	6.1	0.1	0.1	18.8	0.1	0.0	6.1	0.5	0.0	6.0	0.3	0.4
Initial Q Delay(d3),s/veh	0.0	0.0	0.0	0.0	0.0	0.0	0.0	0.0	0.0	0.0	0.0	0.0
%ile BackOfQ(50%),veh/ln	0.8	0.4	0.4	0.1	0.3	0.0	0.6	2.6	0.1	1.9	1.7	1.7
Unsig. Movement Delay, s/veh												
LnGrp Delay(d),s/veh	31.9	16.6	16.7	46.2	18.3	0.0	32.2	17.3	14.3	30.1	13.7	13.8
LnGrp LOS	C	B	B	D	B		C	B	B	C	B	B
Approach Vol, veh/h		141			74	A		620			572	
Approach Delay, s/veh		22.5			20.6			18.2			17.8	
Approach LOS		C			C			B			B	

Timer - Assigned Phs	1	2	3	4	5	6	7	8
Phs Duration (G+Y+Rc), s	10.4	21.7	5.0	18.4	6.9	25.2	7.4	16.0
Change Period (Y+Rc), s	4.6	5.8	4.6	5.1	4.6	5.8	4.6	5.1
Max Green Setting (Gmax), s	28.4	49.2	7.4	44.9	12.4	65.2	15.4	36.9
Max Q Clear Time (g_c+I1), s	6.2	9.5	2.2	3.2	3.2	7.2	3.6	2.9
Green Ext Time (p_c), s	0.3	4.0	0.0	0.5	0.0	2.7	0.1	0.3

Intersection Summary	
HCM 6th Ctrl Delay	18.6
HCM 6th LOS	B

Notes

Unsignalized Delay for [WBR] is excluded from calculations of the approach delay and intersection delay.

Intersection	
Intersection Delay, s/veh	114.6
Intersection LOS	F

Movement	EBL	EBT	EBR	WBL	WBT	WBR	NBL	NBT	NBR	SBL	SBT	SBR
Lane Configurations												
Traffic Vol, veh/h	139	169	28	36	254	24	52	135	111	66	52	240
Future Vol, veh/h	139	169	28	36	254	24	52	135	111	66	52	240
Peak Hour Factor	0.69	0.69	0.69	0.73	0.73	0.73	0.67	0.67	0.67	0.77	0.77	0.77
Heavy Vehicles, %	2	2	2	2	2	2	2	2	2	2	2	2
Mvmt Flow	201	245	41	49	348	33	78	201	166	86	68	312
Number of Lanes	0	1	1	0	1	0	0	1	0	0	1	1

Approach	EB	WB	NB	SB
Opposing Approach	WB	EB	SB	NB
Opposing Lanes	1	2	2	1
Conflicting Approach Left	SB	NB	EB	WB
Conflicting Lanes Left	2	1	2	1
Conflicting Approach Right	NB	SB	WB	EB
Conflicting Lanes Right	1	2	1	2
HCM Control Delay	136.3	141.4	147.4	35.7
HCM LOS	F	F	F	E

Lane	NBLn1	EBLn1	EBLn2	WBLn1	SBLn1	SBLn2
Vol Left, %	17%	45%	0%	11%	56%	0%
Vol Thru, %	45%	55%	0%	81%	44%	0%
Vol Right, %	37%	0%	100%	8%	0%	100%
Sign Control	Stop	Stop	Stop	Stop	Stop	Stop
Traffic Vol by Lane	298	308	28	314	118	240
LT Vol	52	139	0	36	66	0
Through Vol	135	169	0	254	52	0
RT Vol	111	0	28	24	0	240
Lane Flow Rate	445	446	41	430	153	312
Geometry Grp	6	7	7	6	7	7
Degree of Util (X)	1.199	1.201	0.099	1.179	0.426	0.782
Departure Headway (Hd)	10.881	10.765	9.789	11.177	11.529	10.493
Convergence, Y/N	Yes	Yes	Yes	Yes	Yes	Yes
Cap	338	339	368	327	314	349
Service Time	8.881	8.465	7.489	9.177	9.229	8.193
HCM Lane V/C Ratio	1.317	1.316	0.111	1.315	0.487	0.894
HCM Control Delay	147.4	147.4	13.6	141.4	22.5	42.2
HCM Lane LOS	F	F	B	F	C	E
HCM 95th-tile Q	17	17.2	0.3	16.1	2	6.4

Intersection	
Intersection Delay, s/veh	161.9
Intersection LOS	F

Movement	EBL	EBT	EBR	WBL	WBT	WBR	NBL	NBT	NBR	SBL	SBT	SBR
Lane Configurations												
Traffic Vol, veh/h	56	264	24	0	231	113	23	189	4	137	149	59
Future Vol, veh/h	56	264	24	0	231	113	23	189	4	137	149	59
Peak Hour Factor	0.68	0.68	0.68	0.70	0.70	0.70	0.64	0.64	0.64	0.69	0.69	0.69
Heavy Vehicles, %	2	2	2	2	2	2	2	2	2	2	2	2
Mvmt Flow	82	388	35	0	330	161	36	295	6	199	216	86
Number of Lanes	0	1	0	0	1	0	0	1	0	0	1	0

Approach	EB	WB	NB	SB
Opposing Approach	WB	EB	SB	NB
Opposing Lanes	1	1	1	1
Conflicting Approach Left	SB	NB	EB	WB
Conflicting Lanes Left	1	1	1	1
Conflicting Approach Right	NB	SB	WB	EB
Conflicting Lanes Right	1	1	1	1
HCM Control Delay	193.4	168.8	68.2	186.4
HCM LOS	F	F	F	F

Lane	NBLn1	EBLn1	WBLn1	SBLn1
Vol Left, %	11%	16%	0%	40%
Vol Thru, %	88%	77%	67%	43%
Vol Right, %	2%	7%	33%	17%
Sign Control	Stop	Stop	Stop	Stop
Traffic Vol by Lane	216	344	344	345
LT Vol	23	56	0	137
Through Vol	189	264	231	149
RT Vol	4	24	113	59
Lane Flow Rate	338	506	491	500
Geometry Grp	1	1	1	1
Degree of Util (X)	0.904	1.317	1.254	1.3
Departure Headway (Hd)	12.438	11.094	11.079	11.004
Convergence, Y/N	Yes	Yes	Yes	Yes
Cap	294	334	334	335
Service Time	10.438	9.094	9.079	9.004
HCM Lane V/C Ratio	1.15	1.515	1.47	1.493
HCM Control Delay	68.2	193.4	168.8	186.4
HCM Lane LOS	F	F	F	F
HCM 95th-tile Q	8.3	20.6	18.6	20.2

Intersection	
Intersection Delay, s/veh	107
Intersection LOS	F

Movement	EBL	EBT	EBR	WBL	WBT	WBR	NBL	NBT	NBR	SBL	SBT	SBR
Lane Configurations												
Traffic Vol, veh/h	111	218	15	27	251	90	8	195	10	53	174	202
Future Vol, veh/h	111	218	15	27	251	90	8	195	10	53	174	202
Peak Hour Factor	0.61	0.61	0.61	0.70	0.70	0.70	0.87	0.87	0.87	0.76	0.76	0.76
Heavy Vehicles, %	2	2	2	2	2	2	2	2	2	2	2	2
Mvmt Flow	182	357	25	39	359	129	9	224	11	70	229	266
Number of Lanes	1	1	0	0	1	0	1	1	0	1	1	0

Approach	EB	WB	NB	SB
Opposing Approach	WB	EB	SB	NB
Opposing Lanes	1	2	2	2
Conflicting Approach Left	SB	NB	EB	WB
Conflicting Lanes Left	2	2	2	1
Conflicting Approach Right	NB	SB	WB	EB
Conflicting Lanes Right	2	2	1	2
HCM Control Delay	52	190.3	29.7	117.8
HCM LOS	F	F	D	F

Lane	NBLn1	NBLn2	EBLn1	EBLn2	WBLn1	SBLn1	SBLn2
Vol Left, %	100%	0%	100%	0%	7%	100%	0%
Vol Thru, %	0%	95%	0%	94%	68%	0%	46%
Vol Right, %	0%	5%	0%	6%	24%	0%	54%
Sign Control	Stop	Stop	Stop	Stop	Stop	Stop	Stop
Traffic Vol by Lane	8	205	111	233	368	53	376
LT Vol	8	0	111	0	27	53	0
Through Vol	0	195	0	218	251	0	174
RT Vol	0	10	0	15	90	0	202
Lane Flow Rate	9	236	182	382	526	70	495
Geometry Grp	7	7	7	7	6	7	7
Degree of Util (X)	0.026	0.626	0.475	0.939	1.323	0.183	1.176
Departure Headway (Hd)	11.506	10.936	10.681	10.106	9.644	10.261	9.336
Convergence, Y/N	Yes	Yes	Yes	Yes	Yes	Yes	Yes
Cap	313	332	340	363	384	352	391
Service Time	9.206	8.636	8.381	7.806	7.644	7.961	7.036
HCM Lane V/C Ratio	0.029	0.711	0.535	1.052	1.37	0.199	1.266
HCM Control Delay	14.5	30.3	22.7	65.9	190.3	15.2	132.3
HCM Lane LOS	B	D	C	F	F	C	F
HCM 95th-tile Q	0.1	4	2.4	9.9	23.1	0.7	18



Movement	EBL	EBT	EBR	WBL	WBT	WBR	NBL	NBT	NBR	SBL	SBT	SBR
Lane Configurations												
Traffic Volume (veh/h)	72	177	23	4	244	85	12	200	1	45	140	113
Future Volume (veh/h)	72	177	23	4	244	85	12	200	1	45	140	113
Initial Q (Qb), veh	0	0	0	0	0	0	0	0	0	0	0	0
Ped-Bike Adj(A_pbT)	1.00		0.96	0.99		0.96	1.00		0.95	1.00		0.95
Parking Bus, Adj	1.00	1.00	1.00	1.00	1.00	1.00	1.00	1.00	1.00	1.00	1.00	1.00
Work Zone On Approach		No			No			No			No	
Adj Sat Flow, veh/h/ln	1870	1870	1870	1870	1870	1870	1870	1870	1870	1870	1870	1870
Adj Flow Rate, veh/h	106	260	34	6	364	127	17	290	1	49	152	123
Peak Hour Factor	0.68	0.68	0.68	0.67	0.67	0.67	0.69	0.69	0.69	0.92	0.92	0.92
Percent Heavy Veh, %	2	2	2	2	2	2	2	2	2	2	2	2
Cap, veh/h	170	357	42	60	469	162	51	484	2	114	276	223
Arrive On Green	0.36	0.36	0.36	0.36	0.36	0.36	0.03	0.26	0.26	0.06	0.30	0.30
Sat Flow, veh/h	274	993	118	6	1306	450	1781	1862	6	1781	933	755
Grp Volume(v), veh/h	400	0	0	497	0	0	17	0	291	49	0	275
Grp Sat Flow(s),veh/h/ln	1384	0	0	1763	0	0	1781	0	1869	1781	0	1689
Q Serve(g_s), s	0.9	0.0	0.0	0.0	0.0	0.0	0.6	0.0	8.7	1.7	0.0	8.7
Cycle Q Clear(g_c), s	16.8	0.0	0.0	15.9	0.0	0.0	0.6	0.0	8.7	1.7	0.0	8.7
Prop In Lane	0.26		0.08	0.01		0.26	1.00		0.00	1.00		0.45
Lane Grp Cap(c), veh/h	569	0	0	691	0	0	51	0	486	114	0	499
V/C Ratio(X)	0.70	0.00	0.00	0.72	0.00	0.00	0.33	0.00	0.60	0.43	0.00	0.55
Avail Cap(c_a), veh/h	1715	0	0	2090	0	0	261	0	1311	345	0	1254
HCM Platoon Ratio	1.00	1.00	1.00	1.00	1.00	1.00	1.00	1.00	1.00	1.00	1.00	1.00
Upstream Filter(I)	1.00	0.00	0.00	1.00	0.00	0.00	1.00	0.00	1.00	1.00	0.00	1.00
Uniform Delay (d), s/veh	17.8	0.0	0.0	18.1	0.0	0.0	30.2	0.0	20.6	28.6	0.0	18.8
Incr Delay (d2), s/veh	1.6	0.0	0.0	1.4	0.0	0.0	1.4	0.0	5.4	1.0	0.0	4.3
Initial Q Delay(d3),s/veh	0.0	0.0	0.0	0.0	0.0	0.0	0.0	0.0	0.0	0.0	0.0	0.0
%ile BackOfQ(50%),veh/ln	4.9	0.0	0.0	6.1	0.0	0.0	0.3	0.0	4.1	0.7	0.0	3.6
Unsig. Movement Delay, s/veh												
LnGrp Delay(d),s/veh	19.4	0.0	0.0	19.6	0.0	0.0	31.6	0.0	25.9	29.5	0.0	23.2
LnGrp LOS	B	A	A	B	A	A	C	A	C	C	A	C
Approach Vol, veh/h		400			497			308			324	
Approach Delay, s/veh		19.4			19.6			26.2			24.1	
Approach LOS		B			B			C			C	

Timer - Assigned Phs	1	2		4	5	6		8
Phs Duration (G+Y+Rc), s	6.5	26.6		30.3	8.7	24.4		30.3
Change Period (Y+Rc), s	* 4.7	7.9		7.5	* 4.7	* 7.9		7.5
Max Green Setting (Gmax), s	* 9.3	47.1		73.5	* 12	* 45		73.5
Max Q Clear Time (g_c+I1), s	2.6	10.7		17.9	3.7	10.7		18.8
Green Ext Time (p_c), s	0.0	5.5		3.9	0.0	5.5		3.3

Intersection Summary		
HCM 6th Ctrl Delay	21.8	
HCM 6th LOS	C	

Notes

* HCM 6th computational engine requires equal clearance times for the phases crossing the barrier.

Intersection	
Int Delay, s/veh	2.9

Movement	EBL	EBT	EBR	WBL	WBT	WBR	NBL	NBT	NBR	SBL	SBT	SBR
Lane Configurations		⇕			⇕			⇕			⇕	
Traffic Vol, veh/h	16	205	0	0	289	40	0	0	0	37	0	39
Future Vol, veh/h	16	205	0	0	289	40	0	0	0	37	0	39
Conflicting Peds, #/hr	10	0	10	10	0	10	10	0	10	10	0	10
Sign Control	Free	Free	Free	Free	Free	Free	Stop	Stop	Stop	Stop	Stop	Stop
RT Channelized	-	-	None	-	-	None	-	-	None	-	-	None
Storage Length	-	-	-	-	-	-	-	-	-	-	-	-
Veh in Median Storage, #	-	0	-	-	0	-	-	0	-	-	0	-
Grade, %	-	0	-	-	0	-	-	0	-	-	0	-
Peak Hour Factor	75	75	92	92	77	77	92	92	92	57	92	57
Heavy Vehicles, %	2	2	2	2	2	2	2	2	2	2	2	2
Mvmt Flow	21	273	0	0	375	52	0	0	0	65	0	68

Major/Minor	Major1			Major2			Minor1			Minor2		
Conflicting Flow All	437	0	0	283	0	0	770	762	293	736	736	421
Stage 1	-	-	-	-	-	-	325	325	-	411	411	-
Stage 2	-	-	-	-	-	-	445	437	-	325	325	-
Critical Hdwy	4.12	-	-	4.12	-	-	7.12	6.52	6.22	7.12	6.52	6.22
Critical Hdwy Stg 1	-	-	-	-	-	-	6.12	5.52	-	6.12	5.52	-
Critical Hdwy Stg 2	-	-	-	-	-	-	6.12	5.52	-	6.12	5.52	-
Follow-up Hdwy	2.218	-	-	2.218	-	-	3.518	4.018	3.318	3.518	4.018	3.318
Pot Cap-1 Maneuver	1123	-	-	1279	-	-	318	335	746	335	346	632
Stage 1	-	-	-	-	-	-	687	649	-	618	595	-
Stage 2	-	-	-	-	-	-	592	579	-	687	649	-
Platoon blocked, %		-	-		-	-						
Mov Cap-1 Maneuver	1112	-	-	1267	-	-	273	321	732	323	332	620
Mov Cap-2 Maneuver	-	-	-	-	-	-	273	321	-	323	332	-
Stage 1	-	-	-	-	-	-	666	628	-	599	589	-
Stage 2	-	-	-	-	-	-	522	573	-	665	628	-

Approach	EB	WB	NB	SB
HCM Control Delay, s	0.6	0	0	17.2
HCM LOS			A	C

Minor Lane/Major Mvmt	NBLn1	EBL	EBT	EBR	WBL	WBT	WBR	SBLn1
Capacity (veh/h)	-	1112	-	-	1267	-	-	428
HCM Lane V/C Ratio	-	0.019	-	-	-	-	-	0.312
HCM Control Delay (s)	0	8.3	0	-	0	-	-	17.2
HCM Lane LOS	A	A	A	-	A	-	-	C
HCM 95th %tile Q(veh)	-	0.1	-	-	0	-	-	1.3

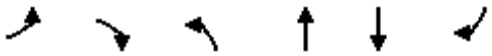

Movement	EBL	EBR	NBL	NBT	SBT	SBR
Lane Configurations						
Traffic Volume (veh/h)	65	180	270	553	220	56
Future Volume (veh/h)	65	180	270	553	220	56
Initial Q (Qb), veh	0	0	0	0	0	0
Ped-Bike Adj(A_pbT)	1.00	1.00	1.00			0.95
Parking Bus, Adj	1.00	1.00	1.00	1.00	1.00	1.00
Work Zone On Approach	No			No	No	
Adj Sat Flow, veh/h/ln	1870	1870	1870	1870	1870	1870
Adj Flow Rate, veh/h	79	220	329	674	272	69
Peak Hour Factor	0.82	0.82	0.82	0.82	0.81	0.81
Percent Heavy Veh, %	2	2	2	2	2	2
Cap, veh/h	280	624	421	1111	380	96
Arrive On Green	0.16	0.16	0.24	0.59	0.27	0.27
Sat Flow, veh/h	1781	1585	1781	1870	1422	361
Grp Volume(v), veh/h	79	220	329	674	0	341
Grp Sat Flow(s),veh/h/ln	1781	1585	1781	1870	0	1782
Q Serve(g_s), s	1.7	4.3	7.6	10.1	0.0	7.7
Cycle Q Clear(g_c), s	1.7	4.3	7.6	10.1	0.0	7.7
Prop In Lane	1.00	1.00	1.00			0.20
Lane Grp Cap(c), veh/h	280	624	421	1111	0	476
V/C Ratio(X)	0.28	0.35	0.78	0.61	0.00	0.72
Avail Cap(c_a), veh/h	806	1092	2256	5034	0	2378
HCM Platoon Ratio	1.00	1.00	1.00	1.00	1.00	1.00
Upstream Filter(I)	1.00	1.00	1.00	1.00	0.00	1.00
Uniform Delay (d), s/veh	16.4	9.4	15.8	5.7	0.0	14.7
Incr Delay (d2), s/veh	0.5	0.3	3.2	0.5	0.0	2.0
Initial Q Delay(d3),s/veh	0.0	0.0	0.0	0.0	0.0	0.0
%ile BackOfQ(50%),veh/ln	0.7	0.1	2.8	1.9	0.0	2.6
Unsig. Movement Delay, s/veh						
LnGrp Delay(d),s/veh	17.0	9.8	19.0	6.2	0.0	16.7
LnGrp LOS	B	A	B	A	A	B
Approach Vol, veh/h	299			1003	341	
Approach Delay, s/veh	11.7			10.4	16.7	
Approach LOS	B			B	B	

Timer - Assigned Phs		2		4	5	6
Phs Duration (G+Y+Rc), s		32.3		11.9	14.5	17.8
Change Period (Y+Rc), s		6.0		5.0	4.0	6.0
Max Green Setting (Gmax), s		119.0		20.0	56.0	59.0
Max Q Clear Time (g_c+I1), s		12.1		6.3	9.6	9.7
Green Ext Time (p_c), s		5.1		0.8	1.0	2.2

Intersection Summary		
HCM 6th Ctrl Delay		12.0
HCM 6th LOS		B



Movement	WBL	WBR	NBT	NBR	SBL	SBT
Lane Configurations						
Traffic Volume (veh/h)	38	36	579	39	7	238
Future Volume (veh/h)	38	36	579	39	7	238
Initial Q (Qb), veh	0	0	0	0	0	0
Ped-Bike Adj(A_pbT)	1.00	1.00		0.96	1.00	
Parking Bus, Adj	1.00	1.00	1.00	1.00	1.00	1.00
Work Zone On Approach	No		No			No
Adj Sat Flow, veh/h/ln	1870	1870	1870	1870	1870	1870
Adj Flow Rate, veh/h	57	54	715	48	9	290
Peak Hour Factor	0.67	0.67	0.81	0.81	0.82	0.82
Percent Heavy Veh, %	2	2	2	2	2	2
Cap, veh/h	156	158	920	62	21	1202
Arrive On Green	0.09	0.09	0.53	0.53	0.01	0.64
Sat Flow, veh/h	1781	1585	1728	116	1781	1870
Grp Volume(v), veh/h	57	54	0	763	9	290
Grp Sat Flow(s),veh/h/ln	1781	1585	0	1844	1781	1870
Q Serve(g_s), s	1.2	1.3	0.0	13.5	0.2	2.7
Cycle Q Clear(g_c), s	1.2	1.3	0.0	13.5	0.2	2.7
Prop In Lane	1.00	1.00		0.06	1.00	
Lane Grp Cap(c), veh/h	156	158	0	982	21	1202
V/C Ratio(X)	0.36	0.34	0.00	0.78	0.43	0.24
Avail Cap(c_a), veh/h	655	602	0	4974	437	5687
HCM Platoon Ratio	1.00	1.00	1.00	1.00	1.00	1.00
Upstream Filter(I)	1.00	1.00	0.00	1.00	1.00	1.00
Uniform Delay (d), s/veh	17.5	17.1	0.0	7.6	20.0	3.1
Incr Delay (d2), s/veh	1.4	1.3	0.0	1.4	12.9	0.1
Initial Q Delay(d3),s/veh	0.0	0.0	0.0	0.0	0.0	0.0
%ile BackOfQ(50%),veh/ln	0.5	0.5	0.0	2.9	0.1	0.3
Unsig. Movement Delay, s/veh						
LnGrp Delay(d),s/veh	19.0	18.4	0.0	9.0	33.0	3.2
LnGrp LOS	B	B	A	A	C	A
Approach Vol, veh/h	111		763			299
Approach Delay, s/veh	18.7		9.0			4.1
Approach LOS	B		A			A

Timer - Assigned Phs	1	2				6	8
Phs Duration (G+Y+Rc), s	4.5	27.7				32.2	8.6
Change Period (Y+Rc), s	4.0	6.0				6.0	5.0
Max Green Setting (Gmax), s	10.0	110.0				124.0	15.0
Max Q Clear Time (g_c+I1), s	2.2	15.5				4.7	3.3
Green Ext Time (p_c), s	0.0	6.3				1.7	0.2

Intersection Summary	
HCM 6th Ctrl Delay	8.6
HCM 6th LOS	A



Movement	EBL	EBT	EBR	WBL	WBT	WBR	NBL	NBT	NBR	SBL	SBT	SBR
Lane Configurations												
Traffic Volume (veh/h)	1	42	2	24	67	136	4	24	46	17	4	3
Future Volume (veh/h)	1	42	2	24	67	136	4	24	46	17	4	3
Initial Q (Qb), veh	0	0	0	0	0	0	0	0	0	0	0	0
Ped-Bike Adj(A_pbT)	1.00		0.88	1.00		0.92	0.99		0.98	1.00		0.96
Parking Bus, Adj	1.00	1.00	1.00	1.00	1.00	1.00	1.00	1.00	1.00	1.00	1.00	1.00
Work Zone On Approach		No			No			No			No	
Adj Sat Flow, veh/h/ln	1870	1870	1870	1870	1870	1870	1870	1870	1870	1870	1870	1870
Adj Flow Rate, veh/h	2	78	4	30	83	168	5	33	63	25	6	4
Peak Hour Factor	0.54	0.54	0.54	0.81	0.81	0.81	0.73	0.73	0.73	0.69	0.69	0.69
Percent Heavy Veh, %	2	2	2	2	2	2	2	2	2	2	2	2
Cap, veh/h	4	142	7	76	209	226	64	323	567	812	568	379
Arrive On Green	0.08	0.08	0.08	0.15	0.15	0.15	0.55	0.55	0.55	0.55	0.55	0.55
Sat Flow, veh/h	44	1707	88	490	1356	1466	35	585	1027	1294	1030	687
Grp Volume(v), veh/h	84	0	0	113	0	168	101	0	0	25	0	10
Grp Sat Flow(s),veh/h/ln	1838	0	0	1846	0	1466	1647	0	0	1294	0	1717
Q Serve(g_s), s	3.7	0.0	0.0	4.7	0.0	9.3	0.0	0.0	0.0	0.0	0.0	0.2
Cycle Q Clear(g_c), s	3.7	0.0	0.0	4.7	0.0	9.3	2.5	0.0	0.0	0.5	0.0	0.2
Prop In Lane	0.02		0.05	0.27		1.00	0.05		0.62	1.00		0.40
Lane Grp Cap(c), veh/h	153	0	0	284	0	226	953	0	0	812	0	947
V/C Ratio(X)	0.55	0.00	0.00	0.40	0.00	0.74	0.11	0.00	0.00	0.03	0.00	0.01
Avail Cap(c_a), veh/h	776	0	0	1061	0	843	953	0	0	812	0	947
HCM Platoon Ratio	1.00	1.00	1.00	1.00	1.00	1.00	1.00	1.00	1.00	1.00	1.00	1.00
Upstream Filter(I)	1.00	0.00	0.00	1.00	0.00	1.00	1.00	0.00	0.00	1.00	0.00	1.00
Uniform Delay (d), s/veh	37.5	0.0	0.0	32.5	0.0	34.4	9.1	0.0	0.0	8.7	0.0	8.6
Incr Delay (d2), s/veh	1.1	0.0	0.0	0.3	0.0	1.8	0.2	0.0	0.0	0.1	0.0	0.0
Initial Q Delay(d3),s/veh	0.0	0.0	0.0	0.0	0.0	0.0	0.0	0.0	0.0	0.0	0.0	0.0
%ile BackOfQ(50%),veh/ln	1.7	0.0	0.0	2.0	0.0	3.3	0.9	0.0	0.0	0.2	0.0	0.1
Unsig. Movement Delay, s/veh												
LnGrp Delay(d),s/veh	38.7	0.0	0.0	32.8	0.0	36.3	9.4	0.0	0.0	8.8	0.0	8.6
LnGrp LOS	D	A	A	C	A	D	A	A	A	A	A	A
Approach Vol, veh/h		84			281			101			35	
Approach Delay, s/veh		38.7			34.9			9.4			8.7	
Approach LOS		D			C			A			A	

Timer - Assigned Phs	2	4	6	8
Phs Duration (G+Y+Rc), s	53.0	13.1	53.0	19.1
Change Period (Y+Rc), s	6.0	6.0	6.0	6.0
Max Green Setting (Gmax), s	47.0	36.0	47.0	49.0
Max Q Clear Time (g_c+I1), s	4.5	5.7	2.5	11.3
Green Ext Time (p_c), s	0.2	0.3	0.2	0.7

Intersection Summary	
HCM 6th Ctrl Delay	28.5
HCM 6th LOS	C



Movement	EBL	EBT	EBR	WBL	WBT	WBR	NBL	NBT	NBR	SBL	SBT	SBR
Lane Configurations												
Traffic Volume (veh/h)	58	18	35	1	49	31	141	1369	22	23	1104	39
Future Volume (veh/h)	58	18	35	1	49	31	141	1369	22	23	1104	39
Initial Q (Qb), veh	0	0	0	0	0	0	0	0	0	0	0	0
Ped-Bike Adj(A_pbT)	1.00		0.94	1.00		0.96	1.00		0.96	1.00		0.98
Parking Bus, Adj	1.00	1.00	1.00	1.00	1.00	1.00	1.00	1.00	1.00	1.00	1.00	1.00
Work Zone On Approach		No			No			No			No	
Adj Sat Flow, veh/h/ln	1870	1870	1870	1870	1870	1870	1870	1870	1870	1870	1870	1870
Adj Flow Rate, veh/h	74	23	45	1	63	40	176	1711	28	30	1453	51
Peak Hour Factor	0.78	0.78	0.78	0.78	0.78	0.78	0.80	0.80	0.80	0.76	0.76	0.76
Percent Heavy Veh, %	2	2	2	2	2	2	2	2	2	2	2	2
Cap, veh/h	133	447	855	5	312	254	280	1733	28	93	1620	824
Arrive On Green	0.07	0.24	0.24	0.00	0.17	0.17	0.08	0.48	0.48	0.05	0.46	0.46
Sat Flow, veh/h	1781	1870	2634	1781	1870	1518	3456	3576	58	1781	3554	1548
Grp Volume(v), veh/h	74	23	45	1	63	40	176	848	891	30	1453	51
Grp Sat Flow(s),veh/h/ln	1781	1870	1317	1781	1870	1518	1728	1777	1857	1781	1777	1548
Q Serve(g_s), s	4.9	1.2	1.5	0.1	3.6	2.8	6.1	58.0	58.5	2.0	46.4	2.0
Cycle Q Clear(g_c), s	4.9	1.2	1.5	0.1	3.6	2.8	6.1	58.0	58.5	2.0	46.4	2.0
Prop In Lane	1.00		1.00	1.00		1.00	1.00		0.03	1.00		1.00
Lane Grp Cap(c), veh/h	133	447	855	5	312	254	280	861	900	93	1620	824
V/C Ratio(X)	0.56	0.05	0.05	0.21	0.20	0.16	0.63	0.98	0.99	0.32	0.90	0.06
Avail Cap(c_a), veh/h	144	698	1209	144	698	566	280	861	900	144	1634	830
HCM Platoon Ratio	1.00	1.00	1.00	1.00	1.00	1.00	1.00	1.00	1.00	1.00	1.00	1.00
Upstream Filter(I)	1.00	1.00	1.00	1.00	1.00	1.00	1.00	1.00	1.00	1.00	1.00	1.00
Uniform Delay (d), s/veh	55.1	36.1	29.0	61.3	44.3	43.9	54.9	31.3	31.4	56.3	30.9	14.0
Incr Delay (d2), s/veh	1.7	0.1	0.1	7.5	0.7	0.6	3.4	27.2	27.5	0.7	8.2	0.1
Initial Q Delay(d3),s/veh	0.0	0.0	0.0	0.0	0.0	0.0	0.0	0.0	0.0	0.0	0.0	0.0
%ile BackOfQ(50%),veh/ln	2.3	0.5	0.5	0.0	1.7	1.1	2.7	28.7	30.2	0.9	19.8	0.7
Unsig. Movement Delay, s/veh												
LnGrp Delay(d),s/veh	56.8	36.2	29.1	68.9	44.9	44.5	58.2	58.6	59.0	57.1	39.1	14.2
LnGrp LOS	E	D	C	E	D	D	E	E	E	E	D	B
Approach Vol, veh/h		142			104			1915			1534	
Approach Delay, s/veh		44.7			45.0			58.7			38.6	
Approach LOS		D			D			E			D	

Timer - Assigned Phs	1	2	3	4	5	6	7	8
Phs Duration (G+Y+Rc), s	12.1	68.2	6.0	37.0	15.7	64.6	14.9	28.1
Change Period (Y+Rc), s	* 5.7	* 8.4	* 5.7	7.5	* 5.7	* 8.4	* 5.7	7.5
Max Green Setting (Gmax), s	* 10	* 57	* 10	46.0	* 10	* 57	* 10	46.0
Max Q Clear Time (g_c+I1), s	4.0	60.5	2.1	3.5	8.1	48.4	6.9	5.6
Green Ext Time (p_c), s	0.0	0.0	0.0	0.6	0.1	7.8	0.0	1.0

Intersection Summary	
HCM 6th Ctrl Delay	49.4
HCM 6th LOS	D

Notes

* HCM 6th computational engine requires equal clearance times for the phases crossing the barrier.

Intersection	
Int Delay, s/veh	3.7

Movement	EBL	EBR	NBL	NBT	SBT	SBR
Lane Configurations						
Traffic Vol, veh/h	66	59	22	824	378	21
Future Vol, veh/h	66	59	22	824	378	21
Conflicting Peds, #/hr	10	10	10	0	0	10
Sign Control	Stop	Stop	Free	Free	Free	Free
RT Channelized	-	None	-	None	-	None
Storage Length	0	-	410	-	-	80
Veh in Median Storage, #	0	-	-	0	0	-
Grade, %	0	-	-	0	0	-
Peak Hour Factor	92	92	92	92	92	92
Heavy Vehicles, %	2	2	2	2	2	2
Mvmt Flow	72	64	24	896	411	23

Major/Minor	Minor2		Major1		Major2	
Conflicting Flow All	1375	431	444	0	-	0
Stage 1	421	-	-	-	-	-
Stage 2	954	-	-	-	-	-
Critical Hdwy	6.42	6.22	4.12	-	-	-
Critical Hdwy Stg 1	5.42	-	-	-	-	-
Critical Hdwy Stg 2	5.42	-	-	-	-	-
Follow-up Hdwy	3.518	3.318	2.218	-	-	-
Pot Cap-1 Maneuver	160	624	1116	-	-	-
Stage 1	662	-	-	-	-	-
Stage 2	374	-	-	-	-	-
Platoon blocked, %				-	-	-
Mov Cap-1 Maneuver	153	612	1105	-	-	-
Mov Cap-2 Maneuver	153	-	-	-	-	-
Stage 1	641	-	-	-	-	-
Stage 2	370	-	-	-	-	-

Approach	EB	NB	SB
HCM Control Delay, s	38.8	0.2	0
HCM LOS	E		

Minor Lane/Major Mvmt	NBL	NBT	EBLn1	SBT	SBR
Capacity (veh/h)	1105	-	237	-	-
HCM Lane V/C Ratio	0.022	-	0.573	-	-
HCM Control Delay (s)	8.3	-	38.8	-	-
HCM Lane LOS	A	-	E	-	-
HCM 95th %tile Q(veh)	0.1	-	3.2	-	-

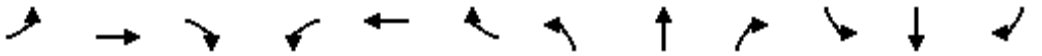

Movement	EBL	EBT	EBR	WBL	WBT	WBR	NBL	NBT	NBR	SBL	SBT	SBR
Lane Configurations												
Traffic Volume (veh/h)	130	114	117	232	84	288	45	351	40	156	183	41
Future Volume (veh/h)	130	114	117	232	84	288	45	351	40	156	183	41
Initial Q (Qb), veh	0	0	0	0	0	0	0	0	0	0	0	0
Ped-Bike Adj(A_pbT)	1.00		0.96	1.00		0.95	1.00		0.97	1.00		0.97
Parking Bus, Adj	1.00	1.00	1.00	1.00	1.00	1.00	1.00	1.00	1.00	1.00	1.00	1.00
Work Zone On Approach		No			No			No			No	
Adj Sat Flow, veh/h/ln	1870	1870	1870	1870	1870	1870	1870	1870	1870	1870	1870	1870
Adj Flow Rate, veh/h	178	156	160	301	109	374	53	413	47	186	218	49
Peak Hour Factor	0.73	0.73	0.73	0.77	0.77	0.77	0.85	0.85	0.85	0.84	0.84	0.84
Percent Heavy Veh, %	2	2	2	2	2	2	2	2	2	2	2	2
Cap, veh/h	212	401	328	336	532	428	168	473	54	219	913	200
Arrive On Green	0.12	0.21	0.21	0.19	0.28	0.28	0.09	0.29	0.29	0.12	0.32	0.32
Sat Flow, veh/h	1781	1870	1528	1781	1870	1506	1781	1643	187	1781	2880	632
Grp Volume(v), veh/h	178	156	160	301	109	374	53	0	460	186	132	135
Grp Sat Flow(s),veh/h/ln	1781	1870	1528	1781	1870	1506	1781	0	1830	1781	1777	1735
Q Serve(g_s), s	9.5	6.9	8.9	16.0	4.3	22.9	2.7	0.0	23.2	9.9	5.3	5.6
Cycle Q Clear(g_c), s	9.5	6.9	8.9	16.0	4.3	22.9	2.7	0.0	23.2	9.9	5.3	5.6
Prop In Lane	1.00		1.00	1.00		1.00	1.00		0.10	1.00		0.36
Lane Grp Cap(c), veh/h	212	401	328	336	532	428	168	0	527	219	563	550
V/C Ratio(X)	0.84	0.39	0.49	0.90	0.20	0.87	0.32	0.00	0.87	0.85	0.24	0.24
Avail Cap(c_a), veh/h	331	444	363	478	598	481	220	0	679	312	751	734
HCM Platoon Ratio	1.00	1.00	1.00	1.00	1.00	1.00	1.00	1.00	1.00	1.00	1.00	1.00
Upstream Filter(I)	1.00	1.00	1.00	1.00	1.00	1.00	1.00	0.00	1.00	1.00	1.00	1.00
Uniform Delay (d), s/veh	41.8	32.6	33.4	38.4	26.4	33.0	41.0	0.0	32.8	41.6	24.4	24.5
Incr Delay (d2), s/veh	6.2	0.9	1.6	11.7	0.3	15.7	0.4	0.0	10.9	10.2	0.3	0.3
Initial Q Delay(d3),s/veh	0.0	0.0	0.0	0.0	0.0	0.0	0.0	0.0	0.0	0.0	0.0	0.0
%ile BackOfQ(50%),veh/ln	4.5	3.2	3.4	8.0	1.9	10.0	1.2	0.0	11.3	4.9	2.2	2.3
Unsig. Movement Delay, s/veh												
LnGrp Delay(d),s/veh	48.1	33.5	35.0	50.1	26.6	48.7	41.4	0.0	43.7	51.8	24.7	24.8
LnGrp LOS	D	C	D	D	C	D	D	A	D	D	C	C
Approach Vol, veh/h		494			784			513			453	
Approach Delay, s/veh		39.2			46.2			43.5			35.9	
Approach LOS		D			D			D			D	

Timer - Assigned Phs	1	2	3	4	5	6	7	8
Phs Duration (G+Y+Rc), s	15.9	33.9	22.3	24.8	13.1	36.7	15.5	31.6
Change Period (Y+Rc), s	4.0	6.0	4.0	4.0	4.0	6.0	4.0	4.0
Max Green Setting (Gmax), s	17.0	36.0	26.0	23.0	12.0	41.0	18.0	31.0
Max Q Clear Time (g_c+I1), s	11.9	25.2	18.0	10.9	4.7	7.6	11.5	24.9
Green Ext Time (p_c), s	0.1	2.7	0.3	1.6	0.0	2.3	0.1	1.6

Intersection Summary	
HCM 6th Ctrl Delay	42.0
HCM 6th LOS	D

Intersection	
Intersection Delay, s/veh	90.3
Intersection LOS	F

Movement	EBL	EBT	EBR	WBL	WBT	WBR	NBL	NBT	NBR	SBL	SBT	SBR
Lane Configurations												
Traffic Vol, veh/h	13	143	118	35	228	162	155	160	16	248	155	73
Future Vol, veh/h	13	143	118	35	228	162	155	160	16	248	155	73
Peak Hour Factor	0.77	0.77	0.77	0.83	0.83	0.83	0.85	0.85	0.85	0.83	0.83	0.83
Heavy Vehicles, %	2	2	2	2	2	2	2	2	2	2	2	2
Mvmt Flow	17	186	153	42	275	195	182	188	19	299	187	88
Number of Lanes	0	1	1	0	1	1	0	1	0	0	1	0

Approach	EB	WB	NB	SB
Opposing Approach	WB	EB	SB	NB
Opposing Lanes	2	2	1	1
Conflicting Approach Left	SB	NB	EB	WB
Conflicting Lanes Left	1	1	2	2
Conflicting Approach Right	NB	SB	WB	EB
Conflicting Lanes Right	1	1	2	2
HCM Control Delay	21.3	32.9	61.3	204.1
HCM LOS	C	D	F	F

Lane	NBLn1	EBLn1	EBLn2	WBLn1	WBLn2	SBLn1
Vol Left, %	47%	8%	0%	13%	0%	52%
Vol Thru, %	48%	92%	0%	87%	0%	33%
Vol Right, %	5%	0%	100%	0%	100%	15%
Sign Control	Stop	Stop	Stop	Stop	Stop	Stop
Traffic Vol by Lane	331	156	118	263	162	476
LT Vol	155	13	0	35	0	248
Through Vol	160	143	0	228	0	155
RT Vol	16	0	118	0	162	73
Lane Flow Rate	389	203	153	317	195	573
Geometry Grp	2	7	7	7	7	2
Degree of Util (X)	0.926	0.525	0.365	0.79	0.445	1.367
Departure Headway (Hd)	9.583	10.386	9.601	9.97	9.161	8.581
Convergence, Y/N	Yes	Yes	Yes	Yes	Yes	Yes
Cap	382	350	377	364	396	430
Service Time	7.583	8.086	7.301	7.67	6.861	6.581
HCM Lane V/C Ratio	1.018	0.58	0.406	0.871	0.492	1.333
HCM Control Delay	61.3	24	17.7	41.4	19	204.1
HCM Lane LOS	F	C	C	E	C	F
HCM 95th-tile Q	9.8	2.9	1.6	6.6	2.2	27.2

Intersection	
Intersection Delay, s/veh	4.9
Intersection LOS	A

Approach	EB	WB	NB	SB
Entry Lanes	1	1	1	1
Conflicting Circle Lanes	1	1	1	1
Adj Approach Flow, veh/h	320	338	62	28
Demand Flow Rate, veh/h	326	345	63	28
Vehicles Circulating, veh/h	25	53	322	392
Vehicles Exiting, veh/h	395	332	29	6
Ped Vol Crossing Leg, #/h	10	10	10	10
Ped Cap Adj	0.999	0.999	0.999	0.999
Approach Delay, s/veh	4.8	5.1	4.3	4.2
Approach LOS	A	A	A	A

Lane	Left	Left	Left	Left
Designated Moves	LTR	LTR	LTR	LTR
Assumed Moves	LTR	LTR	LTR	LTR
RT Channelized				
Lane Util	1.000	1.000	1.000	1.000
Follow-Up Headway, s	2.609	2.609	2.609	2.609
Critical Headway, s	4.976	4.976	4.976	4.976
Entry Flow, veh/h	326	345	63	28
Cap Entry Lane, veh/h	1345	1307	994	925
Entry HV Adj Factor	0.981	0.981	0.983	0.994
Flow Entry, veh/h	320	338	62	28
Cap Entry, veh/h	1318	1280	976	919
V/C Ratio	0.243	0.264	0.063	0.030
Control Delay, s/veh	4.8	5.1	4.3	4.2
LOS	A	A	A	A
95th %tile Queue, veh	1	1	0	0

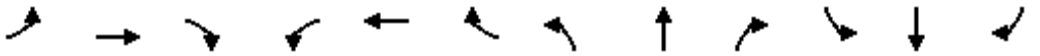

Movement	EBL	EBT	EBR	WBL	WBT	WBR	NBL	NBT	NBR	SBL	SBT	SBR
Lane Configurations												
Traffic Volume (veh/h)	79	136	113	79	166	107	136	727	72	88	887	53
Future Volume (veh/h)	79	136	113	79	166	107	136	727	72	88	887	53
Initial Q (Qb), veh	0	0	0	0	0	0	0	0	0	0	0	0
Ped-Bike Adj(A_pbT)	1.00		0.96	1.00		0.96	1.00		0.96	1.00		0.96
Parking Bus, Adj	1.00	1.00	1.00	1.00	1.00	1.00	1.00	1.00	1.00	1.00	1.00	1.00
Work Zone On Approach		No			No			No			No	
Adj Sat Flow, veh/h/ln	1870	1870	1870	1870	1870	1870	1870	1870	1870	1870	1870	1870
Adj Flow Rate, veh/h	86	148	123	100	210	135	142	757	75	96	964	58
Peak Hour Factor	0.92	0.92	0.92	0.79	0.79	0.79	0.96	0.96	0.96	0.92	0.92	0.92
Percent Heavy Veh, %	2	2	2	2	2	2	2	2	2	2	2	2
Cap, veh/h	108	299	243	124	316	256	169	1674	166	120	1655	100
Arrive On Green	0.06	0.16	0.16	0.07	0.17	0.17	0.09	0.51	0.51	0.07	0.49	0.49
Sat Flow, veh/h	1781	1870	1516	1781	1870	1518	1781	3253	322	1781	3397	204
Grp Volume(v), veh/h	86	148	123	100	210	135	142	413	419	96	504	518
Grp Sat Flow(s),veh/h/ln	1781	1870	1516	1781	1870	1518	1781	1777	1798	1781	1777	1824
Q Serve(g_s), s	5.7	8.7	8.9	6.6	12.6	9.7	9.4	17.7	17.7	6.4	24.4	24.4
Cycle Q Clear(g_c), s	5.7	8.7	8.9	6.6	12.6	9.7	9.4	17.7	17.7	6.4	24.4	24.4
Prop In Lane	1.00		1.00	1.00		1.00	1.00		0.18	1.00		0.11
Lane Grp Cap(c), veh/h	108	299	243	124	316	256	169	915	926	120	866	889
V/C Ratio(X)	0.79	0.49	0.51	0.81	0.66	0.53	0.84	0.45	0.45	0.80	0.58	0.58
Avail Cap(c_a), veh/h	154	500	405	169	516	419	214	915	926	181	866	889
HCM Platoon Ratio	1.00	1.00	1.00	1.00	1.00	1.00	1.00	1.00	1.00	1.00	1.00	1.00
Upstream Filter(I)	1.00	1.00	1.00	0.76	0.76	0.76	0.87	0.87	0.87	1.00	1.00	1.00
Uniform Delay (d), s/veh	55.6	46.0	46.1	55.0	46.7	45.5	53.4	18.4	18.4	55.2	22.0	22.0
Incr Delay (d2), s/veh	10.6	0.5	0.6	10.2	0.7	0.5	15.5	1.4	1.4	7.6	2.9	2.8
Initial Q Delay(d3),s/veh	0.0	0.0	0.0	0.0	0.0	0.0	0.0	0.0	0.0	0.0	0.0	0.0
%ile BackOfQ(50%),veh/ln	2.9	4.0	3.4	3.3	5.9	3.7	4.9	7.5	7.6	3.1	10.7	11.0
Unsig. Movement Delay, s/veh												
LnGrp Delay(d),s/veh	66.2	46.4	46.7	65.2	47.4	46.0	69.0	19.8	19.8	62.8	24.9	24.8
LnGrp LOS	E	D	D	E	D	D	E	B	B	E	C	C
Approach Vol, veh/h		357			445			974			1118	
Approach Delay, s/veh		51.3			51.0			27.0			28.1	
Approach LOS		D			D			C			C	

Timer - Assigned Phs	1	2	3	4	5	6	7	8
Phs Duration (G+Y+Rc), s	13.7	67.5	14.0	24.9	17.0	64.2	12.9	26.0
Change Period (Y+Rc), s	5.6	5.7	5.6	5.7	5.6	5.7	5.6	5.7
Max Green Setting (Gmax), s	12.2	41.7	11.4	32.1	14.4	39.5	10.4	33.1
Max Q Clear Time (g_c+I1), s	8.4	19.7	8.6	10.9	11.4	26.4	7.7	14.6
Green Ext Time (p_c), s	0.0	3.5	0.0	0.7	0.1	3.8	0.0	0.9

Intersection Summary	
HCM 6th Ctrl Delay	34.1
HCM 6th LOS	C



Movement	EBL	EBT	EBR	WBL	WBT	WBR	NBL	NBT	NBR	SBL	SBT	SBR
Lane Configurations												
Traffic Volume (veh/h)	42	197	89	25	179	27	97	450	30	63	651	58
Future Volume (veh/h)	42	197	89	25	179	27	97	450	30	63	651	58
Initial Q (Qb), veh	0	0	0	0	0	0	0	0	0	0	0	0
Ped-Bike Adj(A_pbT)	1.00		0.97	0.99		0.97	1.00		0.96	1.00		0.96
Parking Bus, Adj	1.00	1.00	1.00	1.00	1.00	1.00	1.00	1.00	1.00	1.00	1.00	1.00
Work Zone On Approach		No			No			No			No	
Adj Sat Flow, veh/h/ln	1870	1870	1870	1870	1870	1870	1870	1870	1870	1870	1870	1870
Adj Flow Rate, veh/h	51	240	109	34	242	36	113	523	35	83	857	76
Peak Hour Factor	0.82	0.82	0.82	0.74	0.74	0.74	0.86	0.86	0.86	0.76	0.76	0.76
Percent Heavy Veh, %	2	2	2	2	2	2	2	2	2	2	2	2
Cap, veh/h	161	459	208	84	337	47	147	1269	85	108	1165	103
Arrive On Green	0.09	0.38	0.38	0.24	0.24	0.24	0.08	0.38	0.38	0.06	0.35	0.35
Sat Flow, veh/h	1781	1207	548	110	1424	200	1781	3370	225	1781	3287	292
Grp Volume(v), veh/h	51	0	349	312	0	0	113	275	283	83	463	470
Grp Sat Flow(s),veh/h/ln	1781	0	1755	1735	0	0	1781	1777	1818	1781	1777	1802
Q Serve(g_s), s	1.9	0.0	10.7	4.9	0.0	0.0	4.3	7.9	8.0	3.2	15.8	15.8
Cycle Q Clear(g_c), s	1.9	0.0	10.7	11.4	0.0	0.0	4.3	7.9	8.0	3.2	15.8	15.8
Prop In Lane	1.00		0.31	0.11		0.12	1.00		0.12	1.00		0.16
Lane Grp Cap(c), veh/h	161	0	667	468	0	0	147	669	684	108	630	639
V/C Ratio(X)	0.32	0.00	0.52	0.67	0.00	0.00	0.77	0.41	0.41	0.77	0.74	0.74
Avail Cap(c_a), veh/h	290	0	1226	881	0	0	367	1216	1244	290	1139	1155
HCM Platoon Ratio	1.00	1.00	1.00	1.00	1.00	1.00	1.00	1.00	1.00	1.00	1.00	1.00
Upstream Filter(I)	1.00	0.00	1.00	1.00	0.00	0.00	1.00	1.00	1.00	1.00	1.00	1.00
Uniform Delay (d), s/veh	29.6	0.0	16.7	24.5	0.0	0.0	31.2	16.0	16.0	32.1	19.6	19.6
Incr Delay (d2), s/veh	1.1	0.0	0.6	1.6	0.0	0.0	8.1	0.4	0.4	10.9	1.7	1.7
Initial Q Delay(d3),s/veh	0.0	0.0	0.0	0.0	0.0	0.0	0.0	0.0	0.0	0.0	0.0	0.0
%ile BackOfQ(50%),veh/ln	0.8	0.0	4.0	4.6	0.0	0.0	2.1	3.0	3.1	1.7	6.3	6.4
Unsig. Movement Delay, s/veh												
LnGrp Delay(d),s/veh	30.7	0.0	17.3	26.1	0.0	0.0	39.3	16.4	16.4	43.1	21.3	21.2
LnGrp LOS	C	A	B	C	A	A	D	B	B	D	C	C
Approach Vol, veh/h		400			312			671			1016	
Approach Delay, s/veh		19.0			26.1			20.2			23.0	
Approach LOS		B			C			C			C	

Timer - Assigned Phs	1	2		4	5	6	7	8
Phs Duration (G+Y+Rc), s	7.9	30.6		30.9	9.4	29.1	10.0	20.9
Change Period (Y+Rc), s	3.7	4.5		4.5	3.7	4.5	3.7	4.5
Max Green Setting (Gmax), s	11.3	47.5		48.5	14.3	44.5	11.3	33.5
Max Q Clear Time (g_c+I1), s	5.2	10.0		12.7	6.3	17.8	3.9	13.4
Green Ext Time (p_c), s	0.1	3.8		2.3	0.1	6.8	0.0	1.8

Intersection Summary		
HCM 6th Ctrl Delay		22.0
HCM 6th LOS		C



Movement	EBL	EBT	EBR	WBL	WBT	WBR	NBL	NBT	NBR	SBL	SBT	SBR
Lane Configurations												
Traffic Volume (veh/h)	41	150	75	143	140	195	35	692	93	110	841	34
Future Volume (veh/h)	41	150	75	143	140	195	35	692	93	110	841	34
Initial Q (Qb), veh	0	0	0	0	0	0	0	0	0	0	0	0
Ped-Bike Adj(A_pbT)	1.00		0.96	1.00		0.96	1.00		0.95	1.00		0.96
Parking Bus, Adj	1.00	1.00	1.00	1.00	1.00	1.00	1.00	1.00	1.00	1.00	1.00	1.00
Work Zone On Approach		No			No			No			No	
Adj Sat Flow, veh/h/ln	1870	1870	1870	1870	1870	1870	1870	1870	1870	1870	1870	1870
Adj Flow Rate, veh/h	44	161	81	149	146	203	44	876	118	125	956	39
Peak Hour Factor	0.93	0.93	0.93	0.96	0.96	0.96	0.79	0.79	0.79	0.88	0.88	0.88
Percent Heavy Veh, %	2	2	2	2	2	2	2	2	2	2	2	2
Cap, veh/h	54	199	100	189	185	313	67	1004	135	150	1276	52
Arrive On Green	0.20	0.20	0.20	0.20	0.20	0.20	0.04	0.32	0.32	0.08	0.37	0.37
Sat Flow, veh/h	269	983	494	921	903	1527	1781	3126	421	1781	3472	142
Grp Volume(v), veh/h	286	0	0	295	0	203	44	498	496	125	489	506
Grp Sat Flow(s),veh/h/ln	1745	0	0	1824	0	1527	1781	1777	1770	1781	1777	1837
Q Serve(g_s), s	19.4	0.0	0.0	19.1	0.0	15.2	3.0	32.8	32.8	8.6	29.9	29.9
Cycle Q Clear(g_c), s	19.4	0.0	0.0	19.1	0.0	15.2	3.0	32.8	32.8	8.6	29.9	29.9
Prop In Lane	0.15		0.28	0.51		1.00	1.00		0.24	1.00		0.08
Lane Grp Cap(c), veh/h	353	0	0	374	0	313	67	570	568	150	653	675
V/C Ratio(X)	0.81	0.00	0.00	0.79	0.00	0.65	0.65	0.87	0.87	0.83	0.75	0.75
Avail Cap(c_a), veh/h	520	0	0	543	0	455	87	592	590	162	666	689
HCM Platoon Ratio	1.00	1.00	1.00	1.00	1.00	1.00	1.00	1.00	1.00	1.00	1.00	1.00
Upstream Filter(I)	1.00	0.00	0.00	1.00	0.00	1.00	1.00	1.00	1.00	1.00	1.00	1.00
Uniform Delay (d), s/veh	47.3	0.0	0.0	46.8	0.0	45.3	59.0	39.8	39.8	56.0	34.3	34.3
Incr Delay (d2), s/veh	6.0	0.0	0.0	4.9	0.0	2.3	4.3	15.8	15.9	25.9	6.9	6.7
Initial Q Delay(d3),s/veh	0.0	0.0	0.0	0.0	0.0	0.0	0.0	0.0	0.0	0.0	0.0	0.0
%ile BackOfQ(50%),veh/ln	8.9	0.0	0.0	9.1	0.0	5.9	1.4	16.4	16.3	4.9	13.7	14.1
Unsig. Movement Delay, s/veh												
LnGrp Delay(d),s/veh	53.2	0.0	0.0	51.7	0.0	47.6	63.2	55.6	55.7	82.0	41.2	41.0
LnGrp LOS	D	A	A	D	A	D	E	E	E	F	D	D
Approach Vol, veh/h		286			498			1038			1120	
Approach Delay, s/veh		53.2			50.0			56.0			45.6	
Approach LOS		D			D			E			D	

Timer - Assigned Phs	1	2		4	5	6		8
Phs Duration (G+Y+Rc), s	10.4	51.1		31.6	16.2	45.3		31.2
Change Period (Y+Rc), s	* 5.7	5.4		6.1	* 5.7	5.4		6.1
Max Green Setting (Gmax), s	* 6.1	46.6		37.0	* 11	41.4		37.0
Max Q Clear Time (g_c+I1), s	5.0	31.9		21.1	10.6	34.8		21.4
Green Ext Time (p_c), s	0.0	10.0		2.2	0.0	5.0		1.4

Intersection Summary	
HCM 6th Ctrl Delay	50.8
HCM 6th LOS	D

Notes

* HCM 6th computational engine requires equal clearance times for the phases crossing the barrier.



Movement	EBL	EBT	EBR	WBL	WBT	WBR	NBL	NBT	NBR	SBL	SBT	SBR
Lane Configurations												
Traffic Volume (veh/h)	61	117	192	66	162	72	135	548	36	49	532	59
Future Volume (veh/h)	61	117	192	66	162	72	135	548	36	49	532	59
Initial Q (Qb), veh	0	0	0	0	0	0	0	0	0	0	0	0
Ped-Bike Adj(A_pbT)	1.00		0.91	1.00		0.95	1.00		0.96	1.00		0.95
Parking Bus, Adj	1.00	1.00	1.00	1.00	1.00	1.00	1.00	1.00	1.00	1.00	1.00	1.00
Work Zone On Approach		No			No			No			No	
Adj Sat Flow, veh/h/ln	1870	1870	1870	1870	1870	1870	1870	1870	1870	1870	1870	1870
Adj Flow Rate, veh/h	67	129	211	105	257	114	150	609	40	53	578	64
Peak Hour Factor	0.91	0.91	0.91	0.63	0.63	0.63	0.90	0.90	0.90	0.92	0.92	0.92
Percent Heavy Veh, %	2	2	2	2	2	2	2	2	2	2	2	2
Cap, veh/h	75	144	172	102	248	110	172	662	44	68	607	491
Arrive On Green	0.12	0.12	0.12	0.26	0.26	0.26	0.10	0.38	0.38	0.04	0.32	0.32
Sat Flow, veh/h	629	1210	1441	386	944	419	1781	1730	114	1781	1870	1512
Grp Volume(v), veh/h	196	0	211	476	0	0	150	0	649	53	578	64
Grp Sat Flow(s),veh/h/ln	1839	0	1441	1748	0	0	1781	0	1844	1781	1870	1512
Q Serve(g_s), s	12.4	0.0	14.1	31.1	0.0	0.0	9.8	0.0	39.6	3.5	35.7	3.5
Cycle Q Clear(g_c), s	12.4	0.0	14.1	31.1	0.0	0.0	9.8	0.0	39.6	3.5	35.7	3.5
Prop In Lane	0.34		1.00	0.22		0.24	1.00		0.06	1.00		1.00
Lane Grp Cap(c), veh/h	219	0	172	460	0	0	172	0	706	68	607	491
V/C Ratio(X)	0.89	0.00	1.23	1.03	0.00	0.00	0.87	0.00	0.92	0.78	0.95	0.13
Avail Cap(c_a), veh/h	219	0	172	460	0	0	172	0	715	87	636	514
HCM Platoon Ratio	1.00	1.00	1.00	1.00	1.00	1.00	1.00	1.00	1.00	1.00	1.00	1.00
Upstream Filter(I)	1.00	0.00	1.00	1.00	0.00	0.00	1.00	0.00	1.00	1.00	1.00	1.00
Uniform Delay (d), s/veh	51.3	0.0	52.0	43.5	0.0	0.0	52.7	0.0	34.7	56.3	39.0	28.1
Incr Delay (d2), s/veh	32.8	0.0	142.6	51.1	0.0	0.0	34.4	0.0	16.6	21.0	23.5	0.0
Initial Q Delay(d3),s/veh	0.0	0.0	0.0	0.0	0.0	0.0	0.0	0.0	0.0	0.0	0.0	0.0
%ile BackOfQ(50%),veh/ln	7.7	0.0	11.8	19.7	0.0	0.0	5.9	0.0	20.0	1.9	19.5	1.2
Unsig. Movement Delay, s/veh												
LnGrp Delay(d),s/veh	84.0	0.0	194.6	94.6	0.0	0.0	87.0	0.0	51.3	77.3	62.5	28.2
LnGrp LOS	F	A	F	F	A	A	F	A	D	E	E	C
Approach Vol, veh/h		407			476			799			695	
Approach Delay, s/veh		141.4			94.6			58.0			60.4	
Approach LOS		F			F			E			E	

Timer - Assigned Phs	1	2		4	5	6		8
Phs Duration (G+Y+Rc), s	10.1	51.0		20.0	17.0	44.2		37.0
Change Period (Y+Rc), s	5.6	5.8		5.9	5.6	5.8		5.9
Max Green Setting (Gmax), s	5.8	45.8		14.1	11.4	40.2		31.1
Max Q Clear Time (g_c+I1), s	5.5	41.6		16.1	11.8	37.7		33.1
Green Ext Time (p_c), s	0.0	1.1		0.0	0.0	0.7		0.0

Intersection Summary	
HCM 6th Ctrl Delay	80.3
HCM 6th LOS	F

Intersection	
Intersection Delay, s/veh	79
Intersection LOS	F

Movement	EBL	EBT	EBR	WBL	WBT	WBR	NBL	NBT	NBR	SBL	SBT	SBR
Lane Configurations												
Traffic Vol, veh/h	46	132	88	48	121	52	65	460	44	109	583	66
Future Vol, veh/h	46	132	88	48	121	52	65	460	44	109	583	66
Peak Hour Factor	0.81	0.81	0.81	0.89	0.89	0.89	0.86	0.86	0.86	0.73	0.73	0.73
Heavy Vehicles, %	2	2	2	2	2	2	2	2	2	2	2	2
Mvmt Flow	57	163	109	54	136	58	76	535	51	149	799	90
Number of Lanes	0	1	0	0	1	0	1	2	0	1	2	0

Approach	EB	WB	NB	SB
Opposing Approach	WB	EB	SB	NB
Opposing Lanes	1	1	3	3
Conflicting Approach Left	SB	NB	EB	WB
Conflicting Lanes Left	3	3	1	1
Conflicting Approach Right	NB	SB	WB	EB
Conflicting Lanes Right	3	3	1	1
HCM Control Delay	53.4	33.4	41.1	122.1
HCM LOS	F	D	E	F

Lane	NBLn1	NBLn2	NBLn3	EBLn1	WBLn1	SBLn1	SBLn2	SBLn3
Vol Left, %	100%	0%	0%	17%	22%	100%	0%	0%
Vol Thru, %	0%	100%	78%	50%	55%	0%	100%	75%
Vol Right, %	0%	0%	22%	33%	24%	0%	0%	25%
Sign Control	Stop	Stop	Stop	Stop	Stop	Stop	Stop	Stop
Traffic Vol by Lane	65	307	197	266	221	109	389	260
LT Vol	65	0	0	46	48	109	0	0
Through Vol	0	307	153	132	121	0	389	194
RT Vol	0	0	44	88	52	0	0	66
Lane Flow Rate	76	357	229	328	248	149	532	357
Geometry Grp	7	7	7	7	7	7	7	7
Degree of Util (X)	0.203	0.909	0.575	0.875	0.688	0.4	1.349	0.885
Departure Headway (Hd)	10.089	9.559	9.394	10.026	10.472	9.649	9.12	8.933
Convergence, Y/N	Yes	Yes	Yes	Yes	Yes	Yes	Yes	Yes
Cap	358	382	388	365	348	373	399	407
Service Time	7.789	7.259	7.094	7.726	8.172	7.399	6.869	6.681
HCM Lane V/C Ratio	0.212	0.935	0.59	0.899	0.713	0.399	1.333	0.877
HCM Control Delay	15.3	57.6	24.1	53.4	33.4	18.7	198.7	51
HCM Lane LOS	C	F	C	F	D	C	F	F
HCM 95th-tile Q	0.7	9.4	3.5	8.4	4.9	1.9	25.1	9



Movement	EBL	EBT	EBR	WBL	WBT	WBR	NBL	NBT	NBR	SBL	SBT	SBR
Lane Configurations												
Traffic Volume (veh/h)	84	54	207	65	31	18	79	698	39	20	838	61
Future Volume (veh/h)	84	54	207	65	31	18	79	698	39	20	838	61
Initial Q (Qb), veh	0	0	0	0	0	0	0	0	0	0	0	0
Ped-Bike Adj(A_pbT)	1.00		0.96	1.00		0.95	1.00		0.96	1.00		0.96
Parking Bus, Adj	1.00	1.00	1.00	1.00	1.00	1.00	1.00	1.00	1.00	1.00	1.00	1.00
Work Zone On Approach		No			No			No			No	
Adj Sat Flow, veh/h/ln	1870	1870	1870	1870	1870	1870	1870	1870	1870	1870	1870	1870
Adj Flow Rate, veh/h	108	69	265	86	41	24	81	720	40	22	911	66
Peak Hour Factor	0.78	0.78	0.78	0.76	0.76	0.76	0.97	0.97	0.97	0.92	0.92	0.92
Percent Heavy Veh, %	2	2	2	2	2	2	2	2	2	2	2	2
Cap, veh/h	221	141	304	130	62	36	120	1424	79	67	1297	94
Arrive On Green	0.20	0.20	0.20	0.13	0.13	0.13	0.07	0.42	0.42	0.04	0.39	0.39
Sat Flow, veh/h	1107	708	1525	998	476	279	1781	3414	190	1781	3348	243
Grp Volume(v), veh/h	177	0	265	151	0	0	81	375	385	22	483	494
Grp Sat Flow(s),veh/h/ln	1815	0	1525	1753	0	0	1781	1777	1827	1781	1777	1814
Q Serve(g_s), s	7.8	0.0	15.2	7.4	0.0	0.0	4.0	14.1	14.1	1.1	20.7	20.7
Cycle Q Clear(g_c), s	7.8	0.0	15.2	7.4	0.0	0.0	4.0	14.1	14.1	1.1	20.7	20.7
Prop In Lane	0.61		1.00	0.57		0.16	1.00		0.10	1.00		0.13
Lane Grp Cap(c), veh/h	362	0	304	229	0	0	120	741	762	67	688	703
V/C Ratio(X)	0.49	0.00	0.87	0.66	0.00	0.00	0.68	0.51	0.51	0.33	0.70	0.70
Avail Cap(c_a), veh/h	427	0	359	509	0	0	207	876	900	163	832	850
HCM Platoon Ratio	1.00	1.00	1.00	1.00	1.00	1.00	1.00	1.00	1.00	1.00	1.00	1.00
Upstream Filter(I)	1.00	0.00	1.00	1.00	0.00	0.00	1.00	1.00	1.00	1.00	1.00	1.00
Uniform Delay (d), s/veh	32.2	0.0	35.1	37.4	0.0	0.0	41.2	19.5	19.5	42.4	23.3	23.3
Incr Delay (d2), s/veh	1.0	0.0	18.1	3.2	0.0	0.0	2.5	1.9	1.9	1.1	4.9	4.8
Initial Q Delay(d3),s/veh	0.0	0.0	0.0	0.0	0.0	0.0	0.0	0.0	0.0	0.0	0.0	0.0
%ile BackOfQ(50%),veh/ln	3.5	0.0	7.1	3.3	0.0	0.0	1.8	5.8	5.9	0.5	9.0	9.1
Unsig. Movement Delay, s/veh												
LnGrp Delay(d),s/veh	33.2	0.0	53.2	40.6	0.0	0.0	43.7	21.4	21.4	43.5	28.2	28.1
LnGrp LOS	C	A	D	D	A	A	D	C	C	D	C	C
Approach Vol, veh/h		442			151			841			999	
Approach Delay, s/veh		45.2			40.6			23.5			28.5	
Approach LOS		D			D			C			C	

Timer - Assigned Phs	1	2		4	5	6		8
Phs Duration (G+Y+Rc), s	10.8	40.5		16.5	8.1	43.1		22.7
Change Period (Y+Rc), s	* 4.7	5.4		* 4.7	* 4.7	5.4		4.7
Max Green Setting (Gmax), s	* 11	42.4		* 26	* 8.3	44.6		21.3
Max Q Clear Time (g_c+I1), s	6.0	22.7		9.4	3.1	16.1		17.2
Green Ext Time (p_c), s	0.0	12.3		0.7	0.0	11.9		0.8

Intersection Summary	
HCM 6th Ctrl Delay	30.6
HCM 6th LOS	C

Notes

* HCM 6th computational engine requires equal clearance times for the phases crossing the barrier.



Movement	EBL	EBT	EBR	WBL	WBT	WBR	NBL	NBT	NBR	SBL	SBT	SBR
Lane Configurations												
Traffic Volume (veh/h)	110	65	264	84	70	59	214	576	45	65	803	101
Future Volume (veh/h)	110	65	264	84	70	59	214	576	45	65	803	101
Initial Q (Qb), veh	0	0	0	0	0	0	0	0	0	0	0	0
Ped-Bike Adj(A_pbT)	1.00		0.97	0.99		0.97	1.00		0.96	1.00		0.97
Parking Bus, Adj	1.00	1.00	1.00	1.00	1.00	1.00	1.00	1.00	1.00	1.00	1.00	1.00
Work Zone On Approach		No			No			No			No	
Adj Sat Flow, veh/h/ln	1870	1870	1870	1870	1870	1870	1870	1870	1870	1870	1870	1870
Adj Flow Rate, veh/h	122	72	293	98	81	69	230	619	48	69	854	107
Peak Hour Factor	0.90	0.90	0.90	0.86	0.86	0.86	0.93	0.93	0.93	0.94	0.94	0.94
Percent Heavy Veh, %	2	2	2	2	2	2	2	2	2	2	2	2
Cap, veh/h	150	685	566	156	120	87	263	1373	106	89	996	125
Arrive On Green	0.08	0.37	0.37	0.23	0.23	0.23	0.15	0.41	0.41	0.05	0.31	0.31
Sat Flow, veh/h	1781	1870	1544	471	527	385	1781	3330	258	1781	3166	397
Grp Volume(v), veh/h	122	72	293	248	0	0	230	330	337	69	479	482
Grp Sat Flow(s),veh/h/ln	1781	1870	1544	1383	0	0	1781	1777	1811	1781	1777	1785
Q Serve(g_s), s	6.9	2.6	15.2	14.5	0.0	0.0	12.9	13.7	13.7	3.9	25.9	25.9
Cycle Q Clear(g_c), s	6.9	2.6	15.2	17.0	0.0	0.0	12.9	13.7	13.7	3.9	25.9	25.9
Prop In Lane	1.00		1.00	0.40		0.28	1.00		0.14	1.00		0.22
Lane Grp Cap(c), veh/h	150	685	566	363	0	0	263	733	747	89	559	561
V/C Ratio(X)	0.81	0.11	0.52	0.68	0.00	0.00	0.87	0.45	0.45	0.78	0.86	0.86
Avail Cap(c_a), veh/h	183	899	742	491	0	0	321	763	778	166	608	611
HCM Platoon Ratio	1.00	1.00	1.00	1.00	1.00	1.00	1.00	1.00	1.00	1.00	1.00	1.00
Upstream Filter(I)	1.00	1.00	1.00	1.00	0.00	0.00	1.00	1.00	1.00	1.00	1.00	1.00
Uniform Delay (d), s/veh	46.0	21.3	25.3	36.8	0.0	0.0	42.6	21.7	21.7	48.0	32.9	32.9
Incr Delay (d2), s/veh	16.7	0.0	0.3	0.9	0.0	0.0	19.6	0.6	0.6	5.4	11.6	11.6
Initial Q Delay(d3),s/veh	0.0	0.0	0.0	0.0	0.0	0.0	0.0	0.0	0.0	0.0	0.0	0.0
%ile BackOfQ(50%),veh/ln	3.7	1.1	5.5	5.8	0.0	0.0	7.1	5.7	5.8	1.9	12.7	12.7
Unsig. Movement Delay, s/veh												
LnGrp Delay(d),s/veh	62.7	21.4	25.6	37.7	0.0	0.0	62.2	22.3	22.3	53.4	44.5	44.5
LnGrp LOS	E	C	C	D	A	A	E	C	C	D	D	D
Approach Vol, veh/h		487			248			897			1030	
Approach Delay, s/veh		34.3			37.7			32.5			45.1	
Approach LOS		C			D			C			D	

Timer - Assigned Phs	1	2		4	5	6	7	8
Phs Duration (G+Y+Rc), s	10.7	47.9		43.7	20.7	37.8	14.2	29.4
Change Period (Y+Rc), s	5.6	5.7		6.2	5.6	5.7	5.6	6.2
Max Green Setting (Gmax), s	5.1	43.9		49.1	18.4	35.0	10.5	33.0
Max Q Clear Time (g_c+I1), s	5.9	15.7		17.2	14.9	27.9	8.9	19.0
Green Ext Time (p_c), s	0.0	6.5		0.8	0.2	4.3	0.0	0.9

Intersection Summary		
HCM 6th Ctrl Delay		38.2
HCM 6th LOS		D



Movement	EBL	EBT	EBR	WBL	WBT	WBR	NBL	NBT	NBR	SBL	SBT	SBR
Lane Configurations												
Traffic Volume (veh/h)	0	0	0	227	2	301	213	829	0	0	1131	109
Future Volume (veh/h)	0	0	0	227	2	301	213	829	0	0	1131	109
Initial Q (Qb), veh				0	0	0	0	0	0	0	0	0
Ped-Bike Adj(A_pbT)				1.00		0.97	1.00		1.00	1.00		0.96
Parking Bus, Adj				1.00	1.00	1.00	1.00	1.00	1.00	1.00	1.00	1.00
Work Zone On Approach					No			No			No	
Adj Sat Flow, veh/h/ln				1870	1870	1870	1870	1870	0	0	1870	1870
Adj Flow Rate, veh/h				244	2	324	288	1120	0	0	1285	124
Peak Hour Factor				0.93	0.93	0.93	0.74	0.74	0.74	0.88	0.88	0.88
Percent Heavy Veh, %				2	2	2	2	2	0	0	2	2
Cap, veh/h				450	4	390	317	2303	0	0	1391	134
Arrive On Green				0.25	0.25	0.25	0.18	0.65	0.00	0.00	0.43	0.43
Sat Flow, veh/h				1767	14	1534	1781	3647	0	0	3355	313
Grp Volume(v), veh/h				246	0	324	288	1120	0	0	698	711
Grp Sat Flow(s),veh/h/ln				1782	0	1534	1781	1777	0	0	1777	1798
Q Serve(g_s), s				12.9	0.0	21.5	17.1	17.4	0.0	0.0	39.9	40.4
Cycle Q Clear(g_c), s				12.9	0.0	21.5	17.1	17.4	0.0	0.0	39.9	40.4
Prop In Lane				0.99		1.00	1.00		0.00	0.00		0.17
Lane Grp Cap(c), veh/h				453	0	390	317	2303	0	0	758	767
V/C Ratio(X)				0.54	0.00	0.83	0.91	0.49	0.00	0.00	0.92	0.93
Avail Cap(c_a), veh/h				614	0	528	356	2389	0	0	762	771
HCM Platoon Ratio				1.00	1.00	1.00	1.00	1.00	1.00	1.00	1.00	1.00
Upstream Filter(I)				1.00	0.00	1.00	1.00	1.00	0.00	0.00	1.00	1.00
Uniform Delay (d), s/veh				34.7	0.0	38.0	43.4	9.7	0.0	0.0	29.2	29.3
Incr Delay (d2), s/veh				1.0	0.0	8.0	23.3	0.6	0.0	0.0	17.7	18.6
Initial Q Delay(d3),s/veh				0.0	0.0	0.0	0.0	0.0	0.0	0.0	0.0	0.0
%ile BackOfQ(50%),veh/ln				5.7	0.0	8.9	9.3	6.1	0.0	0.0	19.6	20.2
Unsig. Movement Delay, s/veh												
LnGrp Delay(d),s/veh				35.7	0.0	46.0	66.6	10.3	0.0	0.0	46.9	47.9
LnGrp LOS				D	A	D	E	B	A	A	D	D
Approach Vol, veh/h					570			1408			1409	
Approach Delay, s/veh					41.6			21.8			47.4	
Approach LOS					D			C			D	

Timer - Assigned Phs	1	2		4		6						
Phs Duration (G+Y+Rc), s	23.9	51.3		32.5		75.2						
Change Period (Y+Rc), s	4.7	5.4		5.1		5.4						
Max Green Setting (Gmax), s	23.2	46.2		37.1		72.4						
Max Q Clear Time (g_c+I1), s	19.1	42.4		23.5		19.4						
Green Ext Time (p_c), s	0.1	3.5		2.3		27.3						

Intersection Summary	
HCM 6th Ctrl Delay	35.8
HCM 6th LOS	D

Notes

* HCM 6th computational engine requires equal clearance times for the phases crossing the barrier.



Movement	EBL	EBT	EBR	WBL	WBT	WBR	NBL	NBT	NBR	SBL	SBT	SBR
Lane Configurations												
Traffic Volume (veh/h)	80	3	278	0	0	0	0	961	337	428	931	0
Future Volume (veh/h)	80	3	278	0	0	0	0	961	337	428	931	0
Initial Q (Qb), veh	0	0	0				0	0	0	0	0	0
Ped-Bike Adj(A_pbT)	1.00		0.97				1.00		0.96	1.00		1.00
Parking Bus, Adj	1.00	1.00	1.00				1.00	1.00	1.00	1.00	1.00	1.00
Work Zone On Approach		No						No			No	
Adj Sat Flow, veh/h/ln	1870	1870	1870				0	1870	1870	1870	1870	0
Adj Flow Rate, veh/h	99	4	343				0	1201	421	516	1122	0
Peak Hour Factor	0.81	0.81	0.81				0.80	0.80	0.80	0.83	0.83	0.83
Percent Heavy Veh, %	2	2	2				0	2	2	2	2	0
Cap, veh/h	80	3	277				0	1222	520	537	2433	0
Arrive On Green	0.23	0.23	0.23				0.00	0.34	0.34	0.30	0.68	0.00
Sat Flow, veh/h	351	14	1217				0	3647	1514	1781	3647	0
Grp Volume(v), veh/h	446	0	0				0	1201	421	516	1122	0
Grp Sat Flow(s),veh/h/ln	1582	0	0				0	1777	1514	1781	1777	0
Q Serve(g_s), s	27.3	0.0	0.0				0.0	40.2	30.3	34.1	17.4	0.0
Cycle Q Clear(g_c), s	27.3	0.0	0.0				0.0	40.2	30.3	34.1	17.4	0.0
Prop In Lane	0.22		0.77				0.00		1.00	1.00		0.00
Lane Grp Cap(c), veh/h	360	0	0				0	1222	520	537	2433	0
V/C Ratio(X)	1.24	0.00	0.00				0.00	0.98	0.81	0.96	0.46	0.00
Avail Cap(c_a), veh/h	360	0	0				0	1222	520	539	2437	0
HCM Platoon Ratio	1.00	1.00	1.00				1.00	1.00	1.00	1.00	1.00	1.00
Upstream Filter(I)	1.00	0.00	0.00				0.00	1.00	1.00	1.00	1.00	0.00
Uniform Delay (d), s/veh	46.3	0.0	0.0				0.0	39.0	35.8	41.1	8.7	0.0
Incr Delay (d2), s/veh	128.5	0.0	0.0				0.0	21.9	11.8	28.6	0.5	0.0
Initial Q Delay(d3),s/veh	0.0	0.0	0.0				0.0	0.0	0.0	0.0	0.0	0.0
%ile BackOfQ(50%),veh/ln	23.5	0.0	0.0				0.0	20.5	12.5	18.7	6.0	0.0
Unsig. Movement Delay, s/veh												
LnGrp Delay(d),s/veh	174.7	0.0	0.0				0.0	60.9	47.6	69.8	9.2	0.0
LnGrp LOS	F	A	A				A	E	D	E	A	A
Approach Vol, veh/h		446						1622			1638	
Approach Delay, s/veh		174.7						57.5			28.3	
Approach LOS		F						E			C	

Timer - Assigned Phs	2		5	6		8
Phs Duration (G+Y+Rc), s	87.5		40.9	46.6		32.4
Change Period (Y+Rc), s	5.4		* 4.7	5.4		5.1
Max Green Setting (Gmax), s	82.2		* 36	41.2		27.3
Max Q Clear Time (g_c+I1), s	19.4		36.1	42.2		29.3
Green Ext Time (p_c), s	29.7		0.0	0.0		0.0

Intersection Summary	
HCM 6th Ctrl Delay	58.7
HCM 6th LOS	E

Notes

* HCM 6th computational engine requires equal clearance times for the phases crossing the barrier.



Movement	EBL	EBT	EBR	WBL	WBT	WBR	NBL	NBT	NBR	SBL	SBT	SBR
Lane Configurations												
Traffic Volume (veh/h)	0	0	0	169	6	67	0	644	345	0	790	77
Future Volume (veh/h)	0	0	0	169	6	67	0	644	345	0	790	77
Initial Q (Qb), veh				0	0	0	0	0	0	0	0	0
Ped-Bike Adj(A_pbT)				1.00		0.97	1.00		0.96	1.00		0.96
Parking Bus, Adj				1.00	1.00	1.00	1.00	1.00	1.00	1.00	1.00	1.00
Work Zone On Approach					No			No			No	
Adj Sat Flow, veh/h/ln				1870	1870	1870	0	1870	1870	0	1870	1870
Adj Flow Rate, veh/h				211	8	84	0	692	371	0	940	92
Peak Hour Factor				0.80	0.80	0.80	0.93	0.93	0.93	0.84	0.84	0.84
Percent Heavy Veh, %				2	2	2	0	2	2	0	2	2
Cap, veh/h				394	15	350	0	1623	696	0	2152	210
Arrive On Green				0.23	0.23	0.23	0.00	0.46	0.46	0.00	0.46	0.46
Sat Flow, veh/h				1719	65	1531	0	3647	1524	0	4879	459
Grp Volume(v), veh/h				219	0	84	0	692	371	0	678	354
Grp Sat Flow(s),veh/h/ln				1784	0	1531	0	1777	1524	0	1702	1766
Q Serve(g_s), s				4.3	0.0	1.8	0.0	5.2	7.0	0.0	5.4	5.4
Cycle Q Clear(g_c), s				4.3	0.0	1.8	0.0	5.2	7.0	0.0	5.4	5.4
Prop In Lane				0.96		1.00	0.00		1.00	0.00		0.26
Lane Grp Cap(c), veh/h				408	0	350	0	1623	696	0	1555	807
V/C Ratio(X)				0.54	0.00	0.24	0.00	0.43	0.53	0.00	0.44	0.44
Avail Cap(c_a), veh/h				2104	0	1805	0	5415	2322	0	5187	2691
HCM Platoon Ratio				1.00	1.00	1.00	1.00	1.00	1.00	1.00	1.00	1.00
Upstream Filter(I)				1.00	0.00	1.00	0.00	1.00	1.00	0.00	1.00	1.00
Uniform Delay (d), s/veh				13.5	0.0	12.5	0.0	7.3	7.8	0.0	7.3	7.3
Incr Delay (d2), s/veh				1.1	0.0	0.3	0.0	0.2	0.6	0.0	0.2	0.4
Initial Q Delay(d3),s/veh				0.0	0.0	0.0	0.0	0.0	0.0	0.0	0.0	0.0
%ile BackOfQ(50%),veh/ln				1.5	0.0	0.5	0.0	1.2	1.4	0.0	1.2	1.3
Unsig. Movement Delay, s/veh												
LnGrp Delay(d),s/veh				14.6	0.0	12.9	0.0	7.5	8.4	0.0	7.5	7.7
LnGrp LOS				B	A	B	A	A	A	A	A	A
Approach Vol, veh/h					303			1063			1032	
Approach Delay, s/veh					14.1			7.8			7.6	
Approach LOS					B			A			A	

Timer - Assigned Phs	2		6		8			
Phs Duration (G+Y+Rc), s	24.6		24.6		15.2			
Change Period (Y+Rc), s	6.4		6.4		6.1			
Max Green Setting (Gmax), s	60.6		60.6		46.9			
Max Q Clear Time (g_c+I1), s	9.0		7.4		6.3			
Green Ext Time (p_c), s	7.0		8.1		1.7			

Intersection Summary								
HCM 6th Ctrl Delay	8.5							
HCM 6th LOS	A							



Movement	EBL	EBT	EBR	WBL	WBT	WBR	NBL	NBT	NBR	SBL	SBT	SBR
Lane Configurations												
Traffic Volume (veh/h)	53	2	428	0	0	0	0	936	236	135	824	0
Future Volume (veh/h)	53	2	428	0	0	0	0	936	236	135	824	0
Initial Q (Qb), veh	0	0	0				0	0	0	0	0	0
Ped-Bike Adj(A_pbT)	1.00		0.95				1.00		0.96	1.00		1.00
Parking Bus, Adj	1.00	1.00	1.00				1.00	1.00	1.00	1.00	1.00	1.00
Work Zone On Approach		No						No			No	
Adj Sat Flow, veh/h/ln	1870	1870	1870				0	1870	1870	1870	1870	0
Adj Flow Rate, veh/h	62	2	498				0	985	248	150	916	0
Peak Hour Factor	0.86	0.86	0.86				0.95	0.95	0.95	0.90	0.90	0.90
Percent Heavy Veh, %	2	2	2				0	2	2	2	2	0
Cap, veh/h	444	14	679				0	1362	582	192	2025	0
Arrive On Green	0.26	0.26	0.26				0.00	0.38	0.38	0.11	0.57	0.00
Sat Flow, veh/h	1728	56	2641				0	3647	1518	1781	3647	0
Grp Volume(v), veh/h	64	0	498				0	985	248	150	916	0
Grp Sat Flow(s),veh/h/ln	1784	0	1321				0	1777	1518	1781	1777	0
Q Serve(g_s), s	2.0	0.0	12.5				0.0	17.1	8.7	5.9	10.8	0.0
Cycle Q Clear(g_c), s	2.0	0.0	12.5				0.0	17.1	8.7	5.9	10.8	0.0
Prop In Lane	0.97		1.00				0.00		1.00	1.00		0.00
Lane Grp Cap(c), veh/h	459	0	679				0	1362	582	192	2025	0
V/C Ratio(X)	0.14	0.00	0.73				0.00	0.72	0.43	0.78	0.45	0.00
Avail Cap(c_a), veh/h	887	0	1313				0	2292	979	476	3522	0
HCM Platoon Ratio	1.00	1.00	1.00				1.00	1.00	1.00	1.00	1.00	1.00
Upstream Filter(I)	1.00	0.00	1.00				0.00	1.00	1.00	1.00	1.00	0.00
Uniform Delay (d), s/veh	20.7	0.0	24.6				0.0	19.0	16.4	31.4	9.0	0.0
Incr Delay (d2), s/veh	0.1	0.0	1.6				0.0	0.7	0.5	6.8	0.2	0.0
Initial Q Delay(d3),s/veh	0.0	0.0	0.0				0.0	0.0	0.0	0.0	0.0	0.0
%ile BackOfQ(50%),veh/ln	0.8	0.0	3.8				0.0	6.3	2.8	2.7	3.3	0.0
Unsig. Movement Delay, s/veh												
LnGrp Delay(d),s/veh	20.8	0.0	26.1				0.0	19.8	16.9	38.2	9.2	0.0
LnGrp LOS	C	A	C				A	B	B	D	A	A
Approach Vol, veh/h		562						1233			1066	
Approach Delay, s/veh		25.5						19.2			13.2	
Approach LOS		C						B			B	

Timer - Assigned Phs	1	2	4	6
Phs Duration (G+Y+Rc), s	13.5	34.1	24.7	47.6
Change Period (Y+Rc), s	5.7	6.4	6.1	6.4
Max Green Setting (Gmax), s	7.8	46.6	35.9	71.6
Max Q Clear Time (g_c+I1), s	7.9	19.1	14.5	12.8
Green Ext Time (p_c), s	0.3	8.6	2.5	7.5

Intersection Summary	
HCM 6th Ctrl Delay	18.2
HCM 6th LOS	B

Notes

* HCM 6th computational engine requires equal clearance times for the phases crossing the barrier.



Movement	EBL	EBT	EBR	WBL	WBT	WBR	NBL	NBT	NBR	SBL	SBT	SBR
Lane Configurations												
Traffic Volume (veh/h)	46	82	36	3	121	88	31	44	3	121	119	39
Future Volume (veh/h)	46	82	36	3	121	88	31	44	3	121	119	39
Initial Q (Qb), veh	0	0	0	0	0	0	0	0	0	0	0	0
Ped-Bike Adj(A_pbT)	1.00		0.96	1.00		0.95	1.00		0.98	1.00		0.96
Parking Bus, Adj	1.00	1.00	1.00	1.00	1.00	1.00	1.00	1.00	1.00	1.00	1.00	1.00
Work Zone On Approach		No			No			No			No	
Adj Sat Flow, veh/h/ln	1870	1870	1870	1870	1870	1870	1870	1870	1870	1870	1870	1870
Adj Flow Rate, veh/h	52	92	40	3	133	97	45	64	4	130	128	42
Peak Hour Factor	0.89	0.89	0.89	0.91	0.91	0.91	0.69	0.69	0.69	0.93	0.93	0.93
Percent Heavy Veh, %	2	2	2	2	2	2	2	2	2	2	2	2
Cap, veh/h	82	353	287	7	274	222	75	1536	669	165	1273	399
Arrive On Green	0.05	0.19	0.19	0.00	0.15	0.15	0.04	0.43	0.43	0.09	0.48	0.48
Sat Flow, veh/h	1781	1870	1523	1781	1870	1511	1781	3554	1547	1781	2635	825
Grp Volume(v), veh/h	52	92	40	3	133	97	45	64	4	130	84	86
Grp Sat Flow(s),veh/h/ln	1781	1870	1523	1781	1870	1511	1781	1777	1547	1781	1777	1684
Q Serve(g_s), s	2.0	2.9	1.5	0.1	4.5	4.0	1.7	0.7	0.1	4.9	1.8	1.9
Cycle Q Clear(g_c), s	2.0	2.9	1.5	0.1	4.5	4.0	1.7	0.7	0.1	4.9	1.8	1.9
Prop In Lane	1.00		1.00	1.00		1.00	1.00		1.00	1.00		0.49
Lane Grp Cap(c), veh/h	82	353	287	7	274	222	75	1536	669	165	859	814
V/C Ratio(X)	0.64	0.26	0.14	0.42	0.48	0.44	0.60	0.04	0.01	0.79	0.10	0.11
Avail Cap(c_a), veh/h	176	980	798	130	931	752	166	1536	669	270	859	814
HCM Platoon Ratio	1.00	1.00	1.00	1.00	1.00	1.00	1.00	1.00	1.00	1.00	1.00	1.00
Upstream Filter(I)	1.00	1.00	1.00	1.00	1.00	1.00	1.00	1.00	1.00	1.00	1.00	1.00
Uniform Delay (d), s/veh	32.2	23.8	23.2	34.1	26.9	26.7	32.4	11.3	11.1	30.5	9.6	9.7
Incr Delay (d2), s/veh	3.1	0.4	0.2	13.6	1.3	1.4	2.9	0.1	0.0	3.1	0.2	0.3
Initial Q Delay(d3),s/veh	0.0	0.0	0.0	0.0	0.0	0.0	0.0	0.0	0.0	0.0	0.0	0.0
%ile BackOfQ(50%),veh/ln	0.9	1.3	0.5	0.1	2.0	1.5	0.8	0.3	0.0	2.2	0.7	0.7
Unsig. Movement Delay, s/veh												
LnGrp Delay(d),s/veh	35.3	24.2	23.5	47.7	28.3	28.1	35.2	11.3	11.1	33.6	9.9	9.9
LnGrp LOS	D	C	C	D	C	C	D	B	B	C	A	A
Approach Vol, veh/h		184			233			113			300	
Approach Delay, s/veh		27.2			28.4			20.8			20.2	
Approach LOS		C			C			C			C	

Timer - Assigned Phs	1	2	3	4	5	6	7	8
Phs Duration (G+Y+Rc), s	7.5	38.3	7.7	15.2	11.0	34.8	4.9	18.1
Change Period (Y+Rc), s	4.6	5.1	4.6	5.1	4.6	5.1	4.6	5.1
Max Green Setting (Gmax), s	6.4	33.2	6.8	34.2	10.4	29.2	5.0	36.0
Max Q Clear Time (g_c+I1), s	3.7	3.9	4.0	6.5	6.9	2.7	2.1	4.9
Green Ext Time (p_c), s	0.0	1.4	0.0	1.1	0.0	0.4	0.0	0.6

Intersection Summary	
HCM 6th Ctrl Delay	24.1
HCM 6th LOS	C



Movement	EBL	EBT	EBR	WBL	WBT	WBR	NBL	NBT	NBR	SBL	SBT	SBR
Lane Configurations												
Traffic Volume (veh/h)	237	86	158	80	79	362	161	521	65	464	529	176
Future Volume (veh/h)	237	86	158	80	79	362	161	521	65	464	529	176
Initial Q (Qb), veh	0	0	0	0	0	0	0	0	0	0	0	0
Ped-Bike Adj(A_pbT)	1.00		0.96	1.00		0.97	1.00		0.96	1.00		0.97
Parking Bus, Adj	1.00	1.00	1.00	1.00	1.00	1.00	1.00	1.00	1.00	1.00	1.00	1.00
Work Zone On Approach		No			No			No			No	
Adj Sat Flow, veh/h/ln	1870	1870	1870	1870	1870	1870	1870	1870	1870	1870	1870	1870
Adj Flow Rate, veh/h	266	97	178	108	107	489	218	704	88	546	622	207
Peak Hour Factor	0.89	0.89	0.89	0.74	0.74	0.74	0.74	0.74	0.74	0.85	0.85	0.85
Percent Heavy Veh, %	2	2	2	2	2	2	2	2	2	2	2	2
Cap, veh/h	327	343	279	448	470	647	213	682	85	293	690	229
Arrive On Green	0.18	0.18	0.18	0.25	0.25	0.25	0.12	0.22	0.22	0.16	0.27	0.27
Sat Flow, veh/h	1781	1870	1522	1781	1870	1534	1781	3164	395	1781	2596	863
Grp Volume(v), veh/h	266	97	178	108	107	489	218	395	397	546	425	404
Grp Sat Flow(s),veh/h/ln	1781	1870	1522	1781	1870	1534	1781	1777	1782	1781	1777	1682
Q Serve(g_s), s	20.5	6.4	15.5	6.9	6.5	36.0	17.1	30.9	30.9	23.6	33.1	33.2
Cycle Q Clear(g_c), s	20.5	6.4	15.5	6.9	6.5	36.0	17.1	30.9	30.9	23.6	33.1	33.2
Prop In Lane	1.00		1.00	1.00		1.00	1.00		0.22	1.00		0.51
Lane Grp Cap(c), veh/h	327	343	279	448	470	647	213	383	384	293	473	447
V/C Ratio(X)	0.81	0.28	0.64	0.24	0.23	0.76	1.03	1.03	1.03	1.86	0.90	0.90
Avail Cap(c_a), veh/h	410	431	351	448	470	647	213	383	384	293	475	450
HCM Platoon Ratio	1.00	1.00	1.00	1.00	1.00	1.00	1.00	1.00	1.00	1.00	1.00	1.00
Upstream Filter(I)	1.00	1.00	1.00	1.00	1.00	1.00	1.00	1.00	1.00	1.00	1.00	1.00
Uniform Delay (d), s/veh	56.2	50.4	54.1	42.7	42.6	35.9	63.1	56.2	56.2	59.8	50.7	50.8
Incr Delay (d2), s/veh	11.0	0.6	3.5	0.1	0.1	4.6	68.4	54.2	54.6	400.1	22.0	23.2
Initial Q Delay(d3),s/veh	0.0	0.0	0.0	0.0	0.0	0.0	0.0	0.0	0.0	0.0	0.0	0.0
%ile BackOfQ(50%),veh/ln	10.1	3.0	6.2	3.1	3.0	15.1	11.7	19.4	19.5	43.1	17.4	16.6
Unsig. Movement Delay, s/veh												
LnGrp Delay(d),s/veh	67.2	51.0	57.7	42.8	42.7	40.4	131.5	110.3	110.7	460.0	72.8	74.0
LnGrp LOS	E	D	E	D	D	D	F	F	F	F	E	E
Approach Vol, veh/h		541			704			1010			1375	
Approach Delay, s/veh		61.1			41.1			115.1			226.9	
Approach LOS		E			D			F			F	

Timer - Assigned Phs	1	2		4	5	6		8
Phs Duration (G+Y+Rc), s	21.8	45.4		42.4	29.0	38.2		33.7
Change Period (Y+Rc), s	* 4.7	* 7.3		6.4	5.4	7.3		7.4
Max Green Setting (Gmax), s	* 17	* 38		36.0	23.6	30.9		33.0
Max Q Clear Time (g_c+I1), s	19.1	35.2		38.0	25.6	32.9		22.5
Green Ext Time (p_c), s	0.0	2.3		0.0	0.0	0.0		2.2

Intersection Summary	
HCM 6th Ctrl Delay	135.0
HCM 6th LOS	F

Notes

* HCM 6th computational engine requires equal clearance times for the phases crossing the barrier.

Intersection	
Int Delay, s/veh	0.4

Movement	EBL	EBR	NBL	NBT	SBT	SBR
Lane Configurations						
Traffic Vol, veh/h	7	139	52	446	564	7
Future Vol, veh/h	7	139	52	446	564	7
Conflicting Peds, #/hr	10	10	10	0	0	10
Sign Control	Free	Free	Free	Free	Stop	Stop
RT Channelized	-	None	-	None	-	None
Storage Length	0	-	-	-	-	-
Veh in Median Storage, #	2	-	-	0	0	-
Grade, %	0	-	-	0	0	-
Peak Hour Factor	85	85	85	85	73	73
Heavy Vehicles, %	2	2	2	2	2	2
Mvmt Flow	8	164	61	525	773	10

Major/Minor	Major1		Minor2	
Conflicting Flow All	10	0	657	20
Stage 1	-	-	10	-
Stage 2	-	-	647	-
Critical Hdwy	4.14	-	6.54	6.94
Critical Hdwy Stg 1	-	-	-	-
Critical Hdwy Stg 2	-	-	5.54	-
Follow-up Hdwy	2.22	-	4.02	3.32
Pot Cap-1 Maneuver	1608	-	~ 383	1053
Stage 1	-	-	-	-
Stage 2	-	-	~ 465	-
Platoon blocked, %		-		
Mov Cap-1 Maneuver	1593	-	0	1033
Mov Cap-2 Maneuver	-	-	0	-
Stage 1	-	-	0	-
Stage 2	-	-	0	-

Approach	NB	SB
HCM Control Delay, s	0.9	
HCM LOS		-

Minor Lane/Major Mvmt	NBL	NBT	SBLn1	SBLn2
Capacity (veh/h)	1593	-	-	1033
HCM Lane V/C Ratio	0.038	-	-	0.383
HCM Control Delay (s)	7.3	0.2	-	10.6
HCM Lane LOS	A	A	-	B
HCM 95th %tile Q(veh)	0.1	-	-	1.8

Notes			
~: Volume exceeds capacity	$: Delay exceeds 300s	+: Computation Not Defined	*: All major volume in platoon

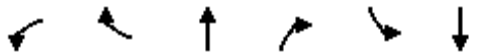

Movement	WBL	WBR	NBT	NBR	SBL	SBT
Lane Configurations						
Traffic Volume (veh/h)	121	254	286	69	221	504
Future Volume (veh/h)	121	254	286	69	221	504
Initial Q (Qb), veh	0	0	0	0	0	0
Ped-Bike Adj(A_pbT)	1.00	1.00		0.94	1.00	
Parking Bus, Adj	1.00	1.00	1.00	1.00	1.00	1.00
Work Zone On Approach	No		No			No
Adj Sat Flow, veh/h/ln	1870	1870	1870	1870	1870	1870
Adj Flow Rate, veh/h	224	470	311	75	238	542
Peak Hour Factor	0.54	0.54	0.92	0.92	0.93	0.93
Percent Heavy Veh, %	2	2	2	2	2	2
Cap, veh/h	605	538	679	160	285	872
Arrive On Green	0.34	0.34	0.24	0.24	0.16	0.47
Sat Flow, veh/h	1781	1585	2910	665	1781	1870
Grp Volume(v), veh/h	224	470	194	192	238	542
Grp Sat Flow(s),veh/h/ln	1781	1585	1777	1705	1781	1870
Q Serve(g_s), s	6.9	20.1	6.7	7.0	9.3	15.7
Cycle Q Clear(g_c), s	6.9	20.1	6.7	7.0	9.3	15.7
Prop In Lane	1.00	1.00		0.39	1.00	
Lane Grp Cap(c), veh/h	605	538	428	411	285	872
V/C Ratio(X)	0.37	0.87	0.45	0.47	0.83	0.62
Avail Cap(c_a), veh/h	1328	1182	990	950	921	2167
HCM Platoon Ratio	1.00	1.00	1.00	1.00	1.00	1.00
Upstream Filter(I)	1.00	1.00	1.00	1.00	1.00	1.00
Uniform Delay (d), s/veh	18.0	22.4	23.3	23.4	29.4	14.5
Incr Delay (d2), s/veh	0.4	4.6	2.7	3.0	2.5	2.6
Initial Q Delay(d3),s/veh	0.0	0.0	0.0	0.0	0.0	0.0
%ile BackOfQ(50%),veh/ln	2.6	16.3	2.9	2.9	3.9	6.3
Unsig. Movement Delay, s/veh						
LnGrp Delay(d),s/veh	18.4	26.9	26.0	26.4	31.8	17.1
LnGrp LOS	B	C	C	C	C	B
Approach Vol, veh/h	694		386			780
Approach Delay, s/veh	24.2		26.2			21.6
Approach LOS	C		C			C

Timer - Assigned Phs		2		4	5	6
Phs Duration (G+Y+Rc), s		41.4		30.7	16.3	25.2
Change Period (Y+Rc), s		* 7.8		6.2	* 4.7	7.8
Max Green Setting (Gmax), s		* 84		53.8	* 37	40.2
Max Q Clear Time (g_c+I1), s		17.7		22.1	11.3	9.0
Green Ext Time (p_c), s		11.2		2.4	0.3	5.8

Intersection Summary	
HCM 6th Ctrl Delay	23.5
HCM 6th LOS	C

Notes

* HCM 6th computational engine requires equal clearance times for the phases crossing the barrier.

Intersection	
Int Delay, s/veh	1.7

Movement	EBT	EBR	WBL	WBT	NBL	NBR
Lane Configurations						
Traffic Vol, veh/h	364	46	52	244	17	47
Future Vol, veh/h	364	46	52	244	17	47
Conflicting Peds, #/hr	0	10	10	0	10	10
Sign Control	Free	Free	Free	Free	Stop	Stop
RT Channelized	-	None	-	None	-	None
Storage Length	-	-	-	-	0	-
Veh in Median Storage, #	0	-	-	0	0	-
Grade, %	0	-	-	0	0	-
Peak Hour Factor	67	67	91	91	86	86
Heavy Vehicles, %	2	2	2	2	2	2
Mvmt Flow	543	69	57	268	20	55

Major/Minor	Major1		Major2		Minor1	
Conflicting Flow All	0	0	622	0	980	598
Stage 1	-	-	-	-	588	-
Stage 2	-	-	-	-	392	-
Critical Hdwy	-	-	4.12	-	6.42	6.22
Critical Hdwy Stg 1	-	-	-	-	5.42	-
Critical Hdwy Stg 2	-	-	-	-	5.42	-
Follow-up Hdwy	-	-	2.218	-	3.518	3.318
Pot Cap-1 Maneuver	-	-	959	-	277	502
Stage 1	-	-	-	-	555	-
Stage 2	-	-	-	-	683	-
Platoon blocked, %	-	-		-		
Mov Cap-1 Maneuver	-	-	950	-	252	492
Mov Cap-2 Maneuver	-	-	-	-	252	-
Stage 1	-	-	-	-	549	-
Stage 2	-	-	-	-	628	-

Approach	EB	WB	NB
HCM Control Delay, s	0	1.6	16.3
HCM LOS			C

Minor Lane/Major Mvmt	NBLn1	EBT	EBR	WBL	WBT
Capacity (veh/h)	393	-	-	950	-
HCM Lane V/C Ratio	0.189	-	-	0.06	-
HCM Control Delay (s)	16.3	-	-	9	0
HCM Lane LOS	C	-	-	A	A
HCM 95th %tile Q(veh)	0.7	-	-	0.2	-

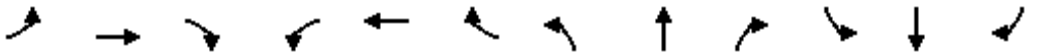

Movement	EBL	EBT	EBR	WBL	WBT	WBR	NBL	NBT	NBR	SBL	SBT	SBR
Lane Configurations												
Traffic Volume (veh/h)	96	217	97	46	118	210	107	410	39	308	511	70
Future Volume (veh/h)	96	217	97	46	118	210	107	410	39	308	511	70
Initial Q (Qb), veh	0	0	0	0	0	0	0	0	0	0	0	0
Ped-Bike Adj(A_pbT)	1.00		0.97	1.00		1.00	1.00		0.96	1.00		0.97
Parking Bus, Adj	1.00	1.00	1.00	1.00	1.00	1.00	1.00	1.00	1.00	1.00	1.00	1.00
Work Zone On Approach		No			No			No			No	
Adj Sat Flow, veh/h/ln	1870	1870	1870	1870	1870	1870	1870	1870	1870	1870	1870	1870
Adj Flow Rate, veh/h	141	319	143	51	131	0	109	418	40	328	544	74
Peak Hour Factor	0.68	0.68	0.68	0.90	0.90	0.90	0.98	0.98	0.98	0.94	0.94	0.94
Percent Heavy Veh, %	2	2	2	2	2	2	2	2	2	2	2	2
Cap, veh/h	182	564	246	80	638		142	772	332	388	1112	151
Arrive On Green	0.10	0.24	0.24	0.04	0.18	0.00	0.08	0.22	0.22	0.22	0.35	0.35
Sat Flow, veh/h	1781	2378	1039	1781	3554	1585	1781	3554	1529	1781	3133	425
Grp Volume(v), veh/h	141	236	226	51	131	0	109	418	40	328	308	310
Grp Sat Flow(s),veh/h/ln	1781	1777	1641	1781	1777	1585	1781	1777	1529	1781	1777	1780
Q Serve(g_s), s	5.5	8.3	8.6	2.0	2.2	0.0	4.3	7.4	1.5	12.5	9.6	9.7
Cycle Q Clear(g_c), s	5.5	8.3	8.6	2.0	2.2	0.0	4.3	7.4	1.5	12.5	9.6	9.7
Prop In Lane	1.00		0.63	1.00		1.00	1.00		1.00	1.00		0.24
Lane Grp Cap(c), veh/h	182	421	389	80	638		142	772	332	388	631	632
V/C Ratio(X)	0.77	0.56	0.58	0.64	0.21		0.77	0.54	0.12	0.85	0.49	0.49
Avail Cap(c_a), veh/h	512	1099	1015	261	1697		437	1763	758	1014	1457	1460
HCM Platoon Ratio	1.00	1.00	1.00	1.00	1.00	1.00	1.00	1.00	1.00	1.00	1.00	1.00
Upstream Filter(I)	1.00	1.00	1.00	1.00	1.00	0.00	1.00	1.00	1.00	1.00	1.00	1.00
Uniform Delay (d), s/veh	31.1	23.8	23.9	33.3	24.8	0.0	32.0	24.6	22.3	26.6	17.9	17.9
Incr Delay (d2), s/veh	6.8	1.2	1.4	8.3	0.2	0.0	8.2	0.6	0.2	5.1	0.6	0.6
Initial Q Delay(d3),s/veh	0.0	0.0	0.0	0.0	0.0	0.0	0.0	0.0	0.0	0.0	0.0	0.0
%ile BackOfQ(50%),veh/ln	2.5	3.3	3.2	1.0	0.9	0.0	2.0	2.9	0.5	5.4	3.6	3.6
Unsig. Movement Delay, s/veh												
LnGrp Delay(d),s/veh	37.9	25.0	25.3	41.6	25.0	0.0	40.2	25.2	22.5	31.7	18.4	18.5
LnGrp LOS	D	C	C	D	C		D	C	C	C	B	B
Approach Vol, veh/h		603			182	A		567			946	
Approach Delay, s/veh		28.1			29.6			27.9			23.1	
Approach LOS		C			C			C			C	

Timer - Assigned Phs	1	2	3	4	5	6	7	8
Phs Duration (G+Y+Rc), s	20.1	21.2	7.8	21.9	10.3	31.0	11.9	17.8
Change Period (Y+Rc), s	4.6	5.8	4.6	5.1	4.6	5.8	4.6	5.1
Max Green Setting (Gmax), s	40.4	35.2	10.4	43.9	17.4	58.2	20.4	33.9
Max Q Clear Time (g_c+I1), s	14.5	9.4	4.0	10.6	6.3	11.7	7.5	4.2
Green Ext Time (p_c), s	0.9	2.8	0.0	2.8	0.2	3.9	0.3	0.7

Intersection Summary	
HCM 6th Ctrl Delay	26.1
HCM 6th LOS	C

Notes

Unsignalized Delay for [WBR] is excluded from calculations of the approach delay and intersection delay.

Intersection	
Intersection Delay, s/veh	10.1
Intersection LOS	B

Movement	EBL	EBT	EBR	WBL	WBT	WBR	NBL	NBT	NBR	SBL	SBT	SBR
Lane Configurations												
Traffic Vol, veh/h	40	75	8	7	79	47	10	41	34	35	35	38
Future Vol, veh/h	40	75	8	7	79	47	10	41	34	35	35	38
Peak Hour Factor	0.74	0.74	0.74	0.79	0.79	0.79	0.45	0.45	0.45	0.87	0.87	0.87
Heavy Vehicles, %	2	2	2	2	2	2	2	2	2	2	2	2
Mvmt Flow	54	101	11	9	100	59	22	91	76	40	40	44
Number of Lanes	0	1	1	0	1	0	0	1	0	0	1	1

Approach	EB	WB	NB	SB
Opposing Approach	WB	EB	SB	NB
Opposing Lanes	1	2	2	1
Conflicting Approach Left	SB	NB	EB	WB
Conflicting Lanes Left	2	1	2	1
Conflicting Approach Right	NB	SB	WB	EB
Conflicting Lanes Right	1	2	1	2
HCM Control Delay	10.2	10.3	10.6	9.1
HCM LOS	B	B	B	A

Lane	NBLn1	EBLn1	EBLn2	WBLn1	SBLn1	SBLn2
Vol Left, %	12%	35%	0%	5%	50%	0%
Vol Thru, %	48%	65%	0%	59%	50%	0%
Vol Right, %	40%	0%	100%	35%	0%	100%
Sign Control	Stop	Stop	Stop	Stop	Stop	Stop
Traffic Vol by Lane	85	115	8	133	70	38
LT Vol	10	40	0	7	35	0
Through Vol	41	75	0	79	35	0
RT Vol	34	0	8	47	0	38
Lane Flow Rate	189	155	11	168	80	44
Geometry Grp	6	7	7	6	7	7
Degree of Util (X)	0.283	0.247	0.015	0.253	0.132	0.06
Departure Headway (Hd)	5.396	5.729	4.847	5.405	5.913	4.953
Convergence, Y/N	Yes	Yes	Yes	Yes	Yes	Yes
Cap	659	622	730	658	601	714
Service Time	3.48	3.516	2.633	3.493	3.705	2.745
HCM Lane V/C Ratio	0.287	0.249	0.015	0.255	0.133	0.062
HCM Control Delay	10.6	10.4	7.7	10.3	9.6	8.1
HCM Lane LOS	B	B	A	B	A	A
HCM 95th-tile Q	1.2	1	0	1	0.5	0.2

Intersection	
Intersection Delay, s/veh	11.4
Intersection LOS	B

Movement	EBL	EBT	EBR	WBL	WBT	WBR	NBL	NBT	NBR	SBL	SBT	SBR
Lane Configurations												
Traffic Vol, veh/h	4	67	24	2	74	140	22	79	1	86	128	8
Future Vol, veh/h	4	67	24	2	74	140	22	79	1	86	128	8
Peak Hour Factor	0.68	0.68	0.68	0.66	0.66	0.66	0.70	0.70	0.70	0.84	0.84	0.84
Heavy Vehicles, %	2	2	2	2	2	2	2	2	2	2	2	2
Mvmt Flow	6	99	35	3	112	212	31	113	1	102	152	10
Number of Lanes	0	1	0	0	1	0	0	1	0	0	1	0

Approach	EB	WB	NB	SB
Opposing Approach	WB	EB	SB	NB
Opposing Lanes	1	1	1	1
Conflicting Approach Left	SB	NB	EB	WB
Conflicting Lanes Left	1	1	1	1
Conflicting Approach Right	NB	SB	WB	EB
Conflicting Lanes Right	1	1	1	1
HCM Control Delay	10	11.9	10.4	12.1
HCM LOS	A	B	B	B

Lane	NBLn1	EBLn1	WBLn1	SBLn1
Vol Left, %	22%	4%	1%	39%
Vol Thru, %	77%	71%	34%	58%
Vol Right, %	1%	25%	65%	4%
Sign Control	Stop	Stop	Stop	Stop
Traffic Vol by Lane	102	95	216	222
LT Vol	22	4	2	86
Through Vol	79	67	74	128
RT Vol	1	24	140	8
Lane Flow Rate	146	140	327	264
Geometry Grp	1	1	1	1
Degree of Util (X)	0.228	0.211	0.448	0.401
Departure Headway (Hd)	5.638	5.446	4.926	5.456
Convergence, Y/N	Yes	Yes	Yes	Yes
Cap	635	658	730	658
Service Time	3.684	3.494	2.964	3.494
HCM Lane V/C Ratio	0.23	0.213	0.448	0.401
HCM Control Delay	10.4	10	11.9	12.1
HCM Lane LOS	B	A	B	B
HCM 95th-tile Q	0.9	0.8	2.3	1.9

Intersection	
Intersection Delay, s/veh	15.7
Intersection LOS	C

Movement	EBL	EBT	EBR	WBL	WBT	WBR	NBL	NBT	NBR	SBL	SBT	SBR
Lane Configurations												
Traffic Vol, veh/h	89	175	14	10	119	51	38	124	38	103	185	58
Future Vol, veh/h	89	175	14	10	119	51	38	124	38	103	185	58
Peak Hour Factor	0.86	0.86	0.86	0.86	0.86	0.86	0.65	0.65	0.65	0.85	0.85	0.85
Heavy Vehicles, %	2	2	2	2	2	2	2	2	2	2	2	2
Mvmt Flow	103	203	16	12	138	59	58	191	58	121	218	68
Number of Lanes	1	1	0	0	1	0	1	1	0	1	1	0

Approach	EB	WB	NB	SB
Opposing Approach	WB	EB	SB	NB
Opposing Lanes	1	2	2	2
Conflicting Approach Left	SB	NB	EB	WB
Conflicting Lanes Left	2	2	2	1
Conflicting Approach Right	NB	SB	WB	EB
Conflicting Lanes Right	2	2	1	2
HCM Control Delay	14.8	16	15.6	16.3
HCM LOS	B	C	C	C

Lane	NBLn1	NBLn2	EBLn1	EBLn2	WBLn1	SBLn1	SBLn2
Vol Left, %	100%	0%	100%	0%	6%	100%	0%
Vol Thru, %	0%	77%	0%	93%	66%	0%	76%
Vol Right, %	0%	23%	0%	7%	28%	0%	24%
Sign Control	Stop	Stop	Stop	Stop	Stop	Stop	Stop
Traffic Vol by Lane	38	162	89	189	180	103	243
LT Vol	38	0	89	0	10	103	0
Through Vol	0	124	0	175	119	0	185
RT Vol	0	38	0	14	51	0	58
Lane Flow Rate	58	249	103	220	209	121	286
Geometry Grp	7	7	7	7	6	7	7
Degree of Util (X)	0.126	0.49	0.225	0.443	0.432	0.255	0.548
Departure Headway (Hd)	7.765	7.083	7.828	7.264	7.422	7.59	6.906
Convergence, Y/N	Yes	Yes	Yes	Yes	Yes	Yes	Yes
Cap	461	508	458	494	483	473	523
Service Time	5.518	4.836	5.581	5.016	5.479	5.34	4.656
HCM Lane V/C Ratio	0.126	0.49	0.225	0.445	0.433	0.256	0.547
HCM Control Delay	11.6	16.5	12.9	15.7	16	12.9	17.8
HCM Lane LOS	B	C	B	C	C	B	C
HCM 95th-tile Q	0.4	2.7	0.9	2.2	2.1	1	3.3



Movement	EBL	EBT	EBR	WBL	WBT	WBR	NBL	NBT	NBR	SBL	SBT	SBR
Lane Configurations												
Traffic Volume (veh/h)	39	232	44	1	117	73	22	122	3	104	320	44
Future Volume (veh/h)	39	232	44	1	117	73	22	122	3	104	320	44
Initial Q (Qb), veh	0	0	0	0	0	0	0	0	0	0	0	0
Ped-Bike Adj(A_pbT)	0.99		0.95	0.99		0.95	1.00		0.95	1.00		0.96
Parking Bus, Adj	1.00	1.00	1.00	1.00	1.00	1.00	1.00	1.00	1.00	1.00	1.00	1.00
Work Zone On Approach		No			No			No			No	
Adj Sat Flow, veh/h/ln	1870	1870	1870	1870	1870	1870	1870	1870	1870	1870	1870	1870
Adj Flow Rate, veh/h	53	314	59	1	123	77	26	144	4	120	368	51
Peak Hour Factor	0.74	0.74	0.74	0.95	0.95	0.95	0.85	0.85	0.85	0.87	0.87	0.87
Percent Heavy Veh, %	2	2	2	2	2	2	2	2	2	2	2	2
Cap, veh/h	102	418	74	52	327	203	71	565	16	161	580	80
Arrive On Green	0.31	0.31	0.31	0.31	0.31	0.31	0.04	0.31	0.31	0.09	0.36	0.36
Sat Flow, veh/h	142	1347	239	1	1055	656	1781	1808	50	1781	1597	221
Grp Volume(v), veh/h	426	0	0	201	0	0	26	0	148	120	0	419
Grp Sat Flow(s),veh/h/ln	1728	0	0	1712	0	0	1781	0	1858	1781	0	1819
Q Serve(g_s), s	8.6	0.0	0.0	0.0	0.0	0.0	1.0	0.0	4.2	4.6	0.0	13.3
Cycle Q Clear(g_c), s	15.6	0.0	0.0	6.4	0.0	0.0	1.0	0.0	4.2	4.6	0.0	13.3
Prop In Lane	0.12		0.14	0.00		0.38	1.00		0.03	1.00		0.12
Lane Grp Cap(c), veh/h	594	0	0	583	0	0	71	0	581	161	0	660
V/C Ratio(X)	0.72	0.00	0.00	0.34	0.00	0.00	0.37	0.00	0.25	0.75	0.00	0.63
Avail Cap(c_a), veh/h	1529	0	0	1528	0	0	237	0	1287	542	0	1561
HCM Platoon Ratio	1.00	1.00	1.00	1.00	1.00	1.00	1.00	1.00	1.00	1.00	1.00	1.00
Upstream Filter(I)	1.00	0.00	0.00	1.00	0.00	0.00	1.00	0.00	1.00	1.00	0.00	1.00
Uniform Delay (d), s/veh	21.9	0.0	0.0	18.9	0.0	0.0	32.8	0.0	18.0	31.1	0.0	18.4
Incr Delay (d2), s/veh	1.6	0.0	0.0	0.4	0.0	0.0	1.2	0.0	1.1	2.6	0.0	4.6
Initial Q Delay(d3),s/veh	0.0	0.0	0.0	0.0	0.0	0.0	0.0	0.0	0.0	0.0	0.0	0.0
%ile BackOfQ(50%),veh/ln	6.2	0.0	0.0	2.5	0.0	0.0	0.4	0.0	1.8	2.0	0.0	5.8
Unsig. Movement Delay, s/veh												
LnGrp Delay(d),s/veh	23.6	0.0	0.0	19.2	0.0	0.0	33.9	0.0	19.0	33.6	0.0	23.1
LnGrp LOS	C	A	A	B	A	A	C	A	B	C	A	C
Approach Vol, veh/h		426			201			174			539	
Approach Delay, s/veh		23.6			19.2			21.3			25.4	
Approach LOS		C			B			C			C	

Timer - Assigned Phs	1	2		4	5	6		8
Phs Duration (G+Y+Rc), s	7.5	33.3		29.2	11.0	29.8		29.2
Change Period (Y+Rc), s	* 4.7	7.9		7.5	* 4.7	* 7.9		7.5
Max Green Setting (Gmax), s	* 9.3	60.1		60.5	* 21	* 49		60.5
Max Q Clear Time (g_c+I1), s	10.6	15.3		8.4	6.6	6.2		17.6
Green Ext Time (p_c), s	0.0	9.5		1.4	0.1	2.7		3.2

Intersection Summary		
HCM 6th Ctrl Delay	23.4	
HCM 6th LOS	C	

Notes

* HCM 6th computational engine requires equal clearance times for the phases crossing the barrier.

Intersection	
Int Delay, s/veh	2.8

Movement	EBL	EBT	EBR	WBL	WBT	WBR	NBL	NBT	NBR	SBL	SBT	SBR
Lane Configurations		↕			↕			↕			↕	
Traffic Vol, veh/h	16	325	0	0	188	39	0	0	0	64	0	12
Future Vol, veh/h	16	325	0	0	188	39	0	0	0	64	0	12
Conflicting Peds, #/hr	10	0	10	10	0	10	10	0	10	10	0	10
Sign Control	Free	Free	Free	Free	Free	Free	Stop	Stop	Stop	Stop	Stop	Stop
RT Channelized	-	-	None	-	-	None	-	-	None	-	-	None
Storage Length	-	-	-	-	-	-	-	-	-	-	-	-
Veh in Median Storage, #	-	0	-	-	0	-	-	0	-	-	0	-
Grade, %	-	0	-	-	0	-	-	0	-	-	0	-
Peak Hour Factor	82	82	82	95	95	95	92	92	92	68	68	68
Heavy Vehicles, %	2	2	2	2	2	2	2	2	2	2	2	2
Mvmt Flow	20	396	0	0	198	41	0	0	0	94	0	18

Major/Minor	Major1			Major2			Minor1			Minor2		
Conflicting Flow All	249	0	0	406	0	0	684	695	416	675	675	239
Stage 1	-	-	-	-	-	-	446	446	-	229	229	-
Stage 2	-	-	-	-	-	-	238	249	-	446	446	-
Critical Hdwy	4.12	-	-	4.12	-	-	7.12	6.52	6.22	7.12	6.52	6.22
Critical Hdwy Stg 1	-	-	-	-	-	-	6.12	5.52	-	6.12	5.52	-
Critical Hdwy Stg 2	-	-	-	-	-	-	6.12	5.52	-	6.12	5.52	-
Follow-up Hdwy	2.218	-	-	2.218	-	-	3.518	4.018	3.318	3.518	4.018	3.318
Pot Cap-1 Maneuver	1317	-	-	1153	-	-	363	366	637	368	376	800
Stage 1	-	-	-	-	-	-	591	574	-	774	715	-
Stage 2	-	-	-	-	-	-	765	701	-	591	574	-
Platoon blocked, %		-	-		-	-						
Mov Cap-1 Maneuver	1304	-	-	1142	-	-	343	351	625	355	361	785
Mov Cap-2 Maneuver	-	-	-	-	-	-	343	351	-	355	361	-
Stage 1	-	-	-	-	-	-	574	557	-	752	708	-
Stage 2	-	-	-	-	-	-	741	694	-	574	557	-

Approach	EB	WB	NB	SB
HCM Control Delay, s	0.4	0	0	17.9
HCM LOS			A	C

Minor Lane/Major Mvmt	NBLn1	EBL	EBT	EBR	WBL	WBT	WBR	SBLn1
Capacity (veh/h)	-	1304	-	-	1142	-	-	389
HCM Lane V/C Ratio	-	0.015	-	-	-	-	-	0.287
HCM Control Delay (s)	0	7.8	0	-	0	-	-	17.9
HCM Lane LOS	A	A	A	-	A	-	-	C
HCM 95th %tile Q(veh)	-	0	-	-	0	-	-	1.2

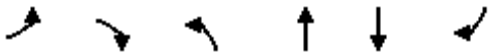

Movement	EBL	EBR	NBL	NBT	SBT	SBR
Lane Configurations						
Traffic Volume (veh/h)	89	304	159	409	538	56
Future Volume (veh/h)	89	304	159	409	538	56
Initial Q (Qb), veh	0	0	0	0	0	0
Ped-Bike Adj(A_pbT)	1.00	1.00	1.00			0.96
Parking Bus, Adj	1.00	1.00	1.00	1.00	1.00	1.00
Work Zone On Approach	No			No	No	
Adj Sat Flow, veh/h/ln	1870	1870	1870	1870	1870	1870
Adj Flow Rate, veh/h	114	390	171	440	578	60
Peak Hour Factor	0.78	0.78	0.93	0.93	0.93	0.93
Percent Heavy Veh, %	2	2	2	2	2	2
Cap, veh/h	437	585	220	1112	684	71
Arrive On Green	0.25	0.25	0.12	0.59	0.41	0.41
Sat Flow, veh/h	1781	1585	1781	1870	1659	172
Grp Volume(v), veh/h	114	390	171	440	0	638
Grp Sat Flow(s),veh/h/ln	1781	1585	1781	1870	0	1831
Q Serve(g_s), s	3.5	14.1	6.4	8.6	0.0	21.6
Cycle Q Clear(g_c), s	3.5	14.1	6.4	8.6	0.0	21.6
Prop In Lane	1.00	1.00	1.00			0.09
Lane Grp Cap(c), veh/h	437	585	220	1112	0	755
V/C Ratio(X)	0.26	0.67	0.78	0.40	0.00	0.85
Avail Cap(c_a), veh/h	519	658	882	3240	0	2159
HCM Platoon Ratio	1.00	1.00	1.00	1.00	1.00	1.00
Upstream Filter(I)	1.00	1.00	1.00	1.00	0.00	1.00
Uniform Delay (d), s/veh	20.9	18.1	29.2	7.4	0.0	18.2
Incr Delay (d2), s/veh	0.3	2.2	5.8	0.2	0.0	2.7
Initial Q Delay(d3),s/veh	0.0	0.0	0.0	0.0	0.0	0.0
%ile BackOfQ(50%),veh/ln	1.4	12.5	2.9	2.6	0.0	8.3
Unsig. Movement Delay, s/veh						
LnGrp Delay(d),s/veh	21.2	20.3	35.0	7.6	0.0	20.9
LnGrp LOS	C	C	C	A	A	C
Approach Vol, veh/h	504			611	638	
Approach Delay, s/veh	20.5			15.3	20.9	
Approach LOS	C			B	C	

Timer - Assigned Phs		2		4	5	6
Phs Duration (G+Y+Rc), s		46.8		21.9	12.5	34.3
Change Period (Y+Rc), s		6.0		5.0	4.0	6.0
Max Green Setting (Gmax), s		119.0		20.0	34.0	81.0
Max Q Clear Time (g_c+I1), s		10.6		16.1	8.4	23.6
Green Ext Time (p_c), s		2.8		0.7	0.4	4.7

Intersection Summary		
HCM 6th Ctrl Delay		18.8
HCM 6th LOS		B



Movement	WBL	WBR	NBT	NBR	SBL	SBT
Lane Configurations						
Traffic Volume (veh/h)	28	53	469	27	44	567
Future Volume (veh/h)	28	53	469	27	44	567
Initial Q (Qb), veh	0	0	0	0	0	0
Ped-Bike Adj(A_pbT)	1.00	1.00		0.96	1.00	
Parking Bus, Adj	1.00	1.00	1.00	1.00	1.00	1.00
Work Zone On Approach	No		No			No
Adj Sat Flow, veh/h/ln	1870	1870	1870	1870	1870	1870
Adj Flow Rate, veh/h	34	64	515	30	46	597
Peak Hour Factor	0.83	0.83	0.91	0.91	0.95	0.95
Percent Heavy Veh, %	2	2	2	2	2	2
Cap, veh/h	158	223	725	42	92	1095
Arrive On Green	0.09	0.09	0.42	0.42	0.05	0.59
Sat Flow, veh/h	1781	1585	1745	102	1781	1870
Grp Volume(v), veh/h	34	64	0	545	46	597
Grp Sat Flow(s),veh/h/ln	1781	1585	0	1847	1781	1870
Q Serve(g_s), s	0.6	1.2	0.0	8.3	0.8	6.6
Cycle Q Clear(g_c), s	0.6	1.2	0.0	8.3	0.8	6.6
Prop In Lane	1.00	1.00		0.06	1.00	
Lane Grp Cap(c), veh/h	158	223	0	767	92	1095
V/C Ratio(X)	0.21	0.29	0.00	0.71	0.50	0.54
Avail Cap(c_a), veh/h	790	785	0	5572	948	6860
HCM Platoon Ratio	1.00	1.00	1.00	1.00	1.00	1.00
Upstream Filter(I)	1.00	1.00	0.00	1.00	1.00	1.00
Uniform Delay (d), s/veh	14.3	13.0	0.0	8.2	15.6	4.3
Incr Delay (d2), s/veh	0.7	0.7	0.0	1.2	4.1	0.4
Initial Q Delay(d3),s/veh	0.0	0.0	0.0	0.0	0.0	0.0
%ile BackOfQ(50%),veh/ln	0.2	0.4	0.0	1.9	0.4	0.6
Unsig. Movement Delay, s/veh						
LnGrp Delay(d),s/veh	15.0	13.7	0.0	9.4	19.7	4.7
LnGrp LOS	B	B	A	A	B	A
Approach Vol, veh/h	98		545			643
Approach Delay, s/veh	14.1		9.4			5.8
Approach LOS	B		A			A

Timer - Assigned Phs	1	2				6	8
Phs Duration (G+Y+Rc), s	5.8	20.0				25.8	8.0
Change Period (Y+Rc), s	4.0	6.0				6.0	5.0
Max Green Setting (Gmax), s	18.0	102.0				124.0	15.0
Max Q Clear Time (g_c+I1), s	2.8	10.3				8.6	3.2
Green Ext Time (p_c), s	0.1	3.8				4.2	0.2

Intersection Summary	
HCM 6th Ctrl Delay	8.0
HCM 6th LOS	A



Movement	EBL	EBT	EBR	WBL	WBT	WBR	NBL	NBT	NBR	SBL	SBT	SBR
Lane Configurations												
Traffic Volume (veh/h)	3	77	1	37	74	167	2	6	10	259	28	2
Future Volume (veh/h)	3	77	1	37	74	167	2	6	10	259	28	2
Initial Q (Qb), veh	0	0	0	0	0	0	0	0	0	0	0	0
Ped-Bike Adj(A_pbT)	1.00		0.88	1.00		0.92	0.99		0.98	1.00		0.97
Parking Bus, Adj	1.00	1.00	1.00	1.00	1.00	1.00	1.00	1.00	1.00	1.00	1.00	1.00
Work Zone On Approach		No			No			No			No	
Adj Sat Flow, veh/h/ln	1870	1870	1870	1870	1870	1870	1870	1870	1870	1870	1870	1870
Adj Flow Rate, veh/h	3	88	1	40	80	180	4	11	19	288	31	2
Peak Hour Factor	0.88	0.88	0.88	0.93	0.93	0.93	0.53	0.53	0.53	0.90	0.90	0.90
Percent Heavy Veh, %	2	2	2	2	2	2	2	2	2	2	2	2
Cap, veh/h	5	148	2	92	185	221	126	345	551	899	1050	68
Arrive On Green	0.08	0.08	0.08	0.15	0.15	0.15	0.61	0.61	0.61	0.61	0.61	0.61
Sat Flow, veh/h	61	1780	20	613	1226	1464	149	570	910	1373	1734	112
Grp Volume(v), veh/h	92	0	0	120	0	180	34	0	0	288	0	33
Grp Sat Flow(s),veh/h/ln	1860	0	0	1840	0	1464	1629	0	0	1373	0	1846
Q Serve(g_s), s	5.4	0.0	0.0	6.7	0.0	13.4	0.0	0.0	0.0	10.5	0.0	0.8
Cycle Q Clear(g_c), s	5.4	0.0	0.0	6.7	0.0	13.4	0.9	0.0	0.0	11.4	0.0	0.8
Prop In Lane	0.03		0.01	0.33		1.00	0.12		0.56	1.00		0.06
Lane Grp Cap(c), veh/h	155	0	0	277	0	221	1022	0	0	899	0	1118
V/C Ratio(X)	0.59	0.00	0.00	0.43	0.00	0.82	0.03	0.00	0.00	0.32	0.00	0.03
Avail Cap(c_a), veh/h	481	0	0	573	0	456	1022	0	0	899	0	1118
HCM Platoon Ratio	1.00	1.00	1.00	1.00	1.00	1.00	1.00	1.00	1.00	1.00	1.00	1.00
Upstream Filter(I)	1.00	0.00	0.00	1.00	0.00	1.00	1.00	0.00	0.00	1.00	0.00	1.00
Uniform Delay (d), s/veh	49.6	0.0	0.0	43.3	0.0	46.2	8.9	0.0	0.0	10.9	0.0	8.9
Incr Delay (d2), s/veh	1.3	0.0	0.0	0.4	0.0	2.8	0.1	0.0	0.0	0.9	0.0	0.0
Initial Q Delay(d3),s/veh	0.0	0.0	0.0	0.0	0.0	0.0	0.0	0.0	0.0	0.0	0.0	0.0
%ile BackOfQ(50%),veh/ln	2.5	0.0	0.0	3.0	0.0	4.9	0.3	0.0	0.0	3.6	0.0	0.3
Unsig. Movement Delay, s/veh												
LnGrp Delay(d),s/veh	51.0	0.0	0.0	43.7	0.0	49.0	9.0	0.0	0.0	11.9	0.0	8.9
LnGrp LOS	D	A	A	D	A	D	A	A	A	B	A	A
Approach Vol, veh/h		92			300			34			321	
Approach Delay, s/veh		51.0			46.9			9.0			11.6	
Approach LOS		D			D			A			B	

Timer - Assigned Phs	2	4	6	8
Phs Duration (G+Y+Rc), s	74.0	15.4	74.0	22.9
Change Period (Y+Rc), s	6.0	6.0	6.0	6.0
Max Green Setting (Gmax), s	68.0	29.0	68.0	35.0
Max Q Clear Time (g_c+I1), s	2.9	7.4	13.4	15.4
Green Ext Time (p_c), s	0.0	0.3	2.8	0.7

Intersection Summary	
HCM 6th Ctrl Delay	30.5
HCM 6th LOS	C



Movement	EBL	EBT	EBR	WBL	WBT	WBR	NBL	NBT	NBR	SBL	SBT	SBR
Lane Configurations												
Traffic Volume (veh/h)	23	44	286	5	27	15	195	1137	6	54	1697	54
Future Volume (veh/h)	23	44	286	5	27	15	195	1137	6	54	1697	54
Initial Q (Qb), veh	0	0	0	0	0	0	0	0	0	0	0	0
Ped-Bike Adj(A_pbT)	1.00		0.94	1.00		0.96	1.00		0.96	1.00		0.98
Parking Bus, Adj	1.00	1.00	1.00	1.00	1.00	1.00	1.00	1.00	1.00	1.00	1.00	1.00
Work Zone On Approach		No			No			No			No	
Adj Sat Flow, veh/h/ln	1870	1870	1870	1870	1870	1870	1870	1870	1870	1870	1870	1870
Adj Flow Rate, veh/h	24	47	304	6	34	19	210	1223	6	57	1805	57
Peak Hour Factor	0.94	0.94	0.94	0.79	0.79	0.79	0.93	0.93	0.93	0.94	0.94	0.94
Percent Heavy Veh, %	2	2	2	2	2	2	2	2	2	2	2	2
Cap, veh/h	82	375	758	27	318	258	288	1760	9	126	1681	805
Arrive On Green	0.05	0.20	0.20	0.02	0.17	0.17	0.08	0.49	0.49	0.07	0.47	0.47
Sat Flow, veh/h	1781	1870	2616	1781	1870	1518	3456	3625	18	1781	3554	1549
Grp Volume(v), veh/h	24	47	304	6	34	19	210	599	630	57	1805	57
Grp Sat Flow(s),veh/h/ln	1781	1870	1308	1781	1870	1518	1728	1777	1866	1781	1777	1549
Q Serve(g_s), s	1.6	2.5	11.3	0.4	1.8	1.3	7.1	31.4	31.4	3.7	56.7	2.2
Cycle Q Clear(g_c), s	1.6	2.5	11.3	0.4	1.8	1.3	7.1	31.4	31.4	3.7	56.7	2.2
Prop In Lane	1.00		1.00	1.00		1.00	1.00		0.01	1.00		1.00
Lane Grp Cap(c), veh/h	82	375	758	27	318	258	288	863	906	126	1681	805
V/C Ratio(X)	0.29	0.13	0.40	0.22	0.11	0.07	0.73	0.69	0.69	0.45	1.07	0.07
Avail Cap(c_a), veh/h	149	718	1236	149	718	583	288	863	906	149	1681	805
HCM Platoon Ratio	1.00	1.00	1.00	1.00	1.00	1.00	1.00	1.00	1.00	1.00	1.00	1.00
Upstream Filter(I)	1.00	1.00	1.00	1.00	1.00	1.00	1.00	1.00	1.00	1.00	1.00	1.00
Uniform Delay (d), s/veh	55.3	39.3	34.8	58.3	42.1	41.8	53.6	23.9	23.9	53.4	31.6	14.4
Incr Delay (d2), s/veh	0.7	0.3	0.7	1.5	0.3	0.3	7.9	4.6	4.4	0.9	44.7	0.2
Initial Q Delay(d3),s/veh	0.0	0.0	0.0	0.0	0.0	0.0	0.0	0.0	0.0	0.0	0.0	0.0
%ile BackOfQ(50%),veh/ln	0.7	1.2	3.7	0.2	0.9	0.5	3.3	13.0	13.6	1.6	32.0	0.8
Unsig. Movement Delay, s/veh												
LnGrp Delay(d),s/veh	56.0	39.6	35.5	59.9	42.4	42.1	61.5	28.5	28.3	54.4	76.3	14.6
LnGrp LOS	E	D	D	E	D	D	E	C	C	D	F	B
Approach Vol, veh/h		375			59			1439			1919	
Approach Delay, s/veh		37.3			44.1			33.3			73.8	
Approach LOS		D			D			C			E	

Timer - Assigned Phs	1	2	3	4	5	6	7	8
Phs Duration (G+Y+Rc), s	14.2	66.6	7.5	31.6	15.7	65.1	11.2	27.9
Change Period (Y+Rc), s	* 5.7	* 8.4	* 5.7	7.5	* 5.7	* 8.4	* 5.7	7.5
Max Green Setting (Gmax), s	* 10	* 57	* 10	46.0	* 10	* 57	* 10	46.0
Max Q Clear Time (g_c+I1), s	5.7	33.4	2.4	13.3	9.1	58.7	3.6	3.8
Green Ext Time (p_c), s	0.0	18.4	0.0	3.4	0.0	0.0	0.0	0.5

Intersection Summary	
HCM 6th Ctrl Delay	54.4
HCM 6th LOS	D

Notes

* HCM 6th computational engine requires equal clearance times for the phases crossing the barrier.

Intersection	
Int Delay, s/veh	2.9

Movement	EBL	EBR	NBL	NBT	SBT	SBR
Lane Configurations						
Traffic Vol, veh/h	52	22	28	568	781	62
Future Vol, veh/h	52	22	28	568	781	62
Conflicting Peds, #/hr	10	10	10	0	0	10
Sign Control	Stop	Stop	Free	Free	Free	Free
RT Channelized	-	None	-	None	-	None
Storage Length	0	-	410	-	-	80
Veh in Median Storage, #	0	-	-	0	0	-
Grade, %	0	-	-	0	0	-
Peak Hour Factor	92	92	92	92	92	92
Heavy Vehicles, %	2	2	2	2	2	2
Mvmt Flow	57	24	30	617	849	67

Major/Minor	Minor2		Major1		Major2	
Conflicting Flow All	1546	869	926	0	-	0
Stage 1	859	-	-	-	-	-
Stage 2	687	-	-	-	-	-
Critical Hdwy	6.42	6.22	4.12	-	-	-
Critical Hdwy Stg 1	5.42	-	-	-	-	-
Critical Hdwy Stg 2	5.42	-	-	-	-	-
Follow-up Hdwy	3.518	3.318	2.218	-	-	-
Pot Cap-1 Maneuver	126	351	738	-	-	-
Stage 1	415	-	-	-	-	-
Stage 2	499	-	-	-	-	-
Platoon blocked, %				-	-	-
Mov Cap-1 Maneuver	118	344	731	-	-	-
Mov Cap-2 Maneuver	118	-	-	-	-	-
Stage 1	394	-	-	-	-	-
Stage 2	494	-	-	-	-	-

Approach	EB	NB	SB
HCM Control Delay, s	55.7	0.5	0
HCM LOS	F		

Minor Lane/Major Mvmt	NBL	NBT	EBLn1	SBT	SBR
Capacity (veh/h)	731	-	147	-	-
HCM Lane V/C Ratio	0.042	-	0.547	-	-
HCM Control Delay (s)	10.1	-	55.7	-	-
HCM Lane LOS	B	-	F	-	-
HCM 95th %tile Q(veh)	0.1	-	2.7	-	-

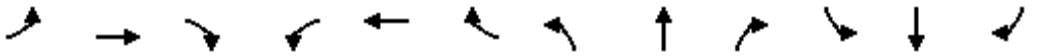

Movement	EBL	EBT	EBR	WBL	WBT	WBR	NBL	NBT	NBR	SBL	SBT	SBR
Lane Configurations												
Traffic Volume (veh/h)	105	37	44	56	45	111	54	292	23	159	347	122
Future Volume (veh/h)	105	37	44	56	45	111	54	292	23	159	347	122
Initial Q (Qb), veh	0	0	0	0	0	0	0	0	0	0	0	0
Ped-Bike Adj(A_pbT)	1.00		0.96	1.00		0.94	1.00		0.97	1.00		0.97
Parking Bus, Adj	1.00	1.00	1.00	1.00	1.00	1.00	1.00	1.00	1.00	1.00	1.00	1.00
Work Zone On Approach		No			No			No			No	
Adj Sat Flow, veh/h/ln	1870	1870	1870	1870	1870	1870	1870	1870	1870	1870	1870	1870
Adj Flow Rate, veh/h	142	50	59	84	67	166	64	344	27	167	365	128
Peak Hour Factor	0.74	0.74	0.74	0.67	0.67	0.67	0.85	0.85	0.85	0.95	0.95	0.95
Percent Heavy Veh, %	2	2	2	2	2	2	2	2	2	2	2	2
Cap, veh/h	257	410	336	222	374	297	215	463	36	239	732	252
Arrive On Green	0.14	0.22	0.22	0.12	0.20	0.20	0.12	0.27	0.27	0.13	0.28	0.28
Sat Flow, veh/h	1781	1870	1529	1781	1870	1486	1781	1707	134	1781	2570	886
Grp Volume(v), veh/h	142	50	59	84	67	166	64	0	371	167	250	243
Grp Sat Flow(s),veh/h/ln	1781	1870	1529	1781	1870	1486	1781	0	1841	1781	1777	1679
Q Serve(g_s), s	5.3	1.5	2.2	3.1	2.1	7.2	2.4	0.0	13.2	6.4	8.4	8.7
Cycle Q Clear(g_c), s	5.3	1.5	2.2	3.1	2.1	7.2	2.4	0.0	13.2	6.4	8.4	8.7
Prop In Lane	1.00		1.00	1.00		1.00	1.00		0.07	1.00		0.53
Lane Grp Cap(c), veh/h	257	410	336	222	374	297	215	0	499	239	506	478
V/C Ratio(X)	0.55	0.12	0.18	0.38	0.18	0.56	0.30	0.00	0.74	0.70	0.49	0.51
Avail Cap(c_a), veh/h	372	912	745	273	807	641	298	0	974	446	1089	1029
HCM Platoon Ratio	1.00	1.00	1.00	1.00	1.00	1.00	1.00	1.00	1.00	1.00	1.00	1.00
Upstream Filter(I)	1.00	1.00	1.00	1.00	1.00	1.00	1.00	0.00	1.00	1.00	1.00	1.00
Uniform Delay (d), s/veh	28.6	22.5	22.8	28.9	23.8	25.9	28.8	0.0	23.9	29.7	21.4	21.5
Incr Delay (d2), s/veh	0.7	0.2	0.4	0.4	0.3	2.3	0.3	0.0	3.1	1.4	1.1	1.2
Initial Q Delay(d3),s/veh	0.0	0.0	0.0	0.0	0.0	0.0	0.0	0.0	0.0	0.0	0.0	0.0
%ile BackOfQ(50%),veh/ln	2.2	0.7	0.8	1.3	0.9	2.6	1.0	0.0	5.6	2.7	3.4	3.3
Unsig. Movement Delay, s/veh												
LnGrp Delay(d),s/veh	29.3	22.7	23.1	29.3	24.2	28.2	29.1	0.0	27.0	31.1	22.4	22.7
LnGrp LOS	C	C	C	C	C	C	C	A	C	C	C	C
Approach Vol, veh/h		251			317			435			660	
Approach Delay, s/veh		26.5			27.6			27.3			24.7	
Approach LOS		C			C			C			C	

Timer - Assigned Phs	1	2	3	4	5	6	7	8
Phs Duration (G+Y+Rc), s	13.6	25.5	12.9	19.8	12.7	26.5	14.4	18.3
Change Period (Y+Rc), s	4.0	6.0	4.0	4.0	4.0	6.0	4.0	4.0
Max Green Setting (Gmax), s	18.0	38.0	11.0	35.0	12.0	44.0	15.0	31.0
Max Q Clear Time (g_c+I1), s	8.4	15.2	5.1	4.2	4.4	10.7	7.3	9.2
Green Ext Time (p_c), s	0.1	3.0	0.0	0.7	0.0	4.6	0.1	1.4

Intersection Summary	
HCM 6th Ctrl Delay	26.2
HCM 6th LOS	C

Intersection	
Intersection Delay, s/veh	60.4
Intersection LOS	F

Movement	EBL	EBT	EBR	WBL	WBT	WBR	NBL	NBT	NBR	SBL	SBT	SBR
Lane Configurations												
Traffic Vol, veh/h	25	201	245	16	107	210	83	168	18	215	260	17
Future Vol, veh/h	25	201	245	16	107	210	83	168	18	215	260	17
Peak Hour Factor	0.83	0.83	0.83	0.90	0.90	0.90	0.89	0.89	0.89	0.91	0.91	0.91
Heavy Vehicles, %	2	2	2	2	2	2	2	2	2	2	2	2
Mvmt Flow	30	242	295	18	119	233	93	189	20	236	286	19
Number of Lanes	0	1	1	0	1	1	0	1	0	0	1	0

Approach	EB	WB	NB	SB
Opposing Approach	WB	EB	SB	NB
Opposing Lanes	2	2	1	1
Conflicting Approach Left	SB	NB	EB	WB
Conflicting Lanes Left	1	1	2	2
Conflicting Approach Right	NB	SB	WB	EB
Conflicting Lanes Right	1	1	2	2
HCM Control Delay	26.3	19.6	31.8	140
HCM LOS	D	C	D	F

Lane	NBLn1	EBLn1	EBLn2	WBLn1	WBLn2	SBLn1
Vol Left, %	31%	11%	0%	13%	0%	44%
Vol Thru, %	62%	89%	0%	87%	0%	53%
Vol Right, %	7%	0%	100%	0%	100%	3%
Sign Control	Stop	Stop	Stop	Stop	Stop	Stop
Traffic Vol by Lane	269	226	245	123	210	492
LT Vol	83	25	0	16	0	215
Through Vol	168	201	0	107	0	260
RT Vol	18	0	245	0	210	17
Lane Flow Rate	302	272	295	137	233	541
Geometry Grp	2	7	7	7	7	2
Degree of Util (X)	0.712	0.648	0.641	0.339	0.529	1.21
Departure Headway (Hd)	9.144	9.255	8.463	9.649	8.843	8.054
Convergence, Y/N	Yes	Yes	Yes	Yes	Yes	Yes
Cap	399	392	431	374	411	449
Service Time	7.144	6.955	6.163	7.349	6.543	6.134
HCM Lane V/C Ratio	0.757	0.694	0.684	0.366	0.567	1.205
HCM Control Delay	31.8	27.5	25.1	17.2	21	140
HCM Lane LOS	D	D	D	C	C	F
HCM 95th-tile Q	5.4	4.4	4.4	1.5	3	21.1

Intersection	
Intersection Delay, s/veh	5.2
Intersection LOS	A

Approach	EB	WB	NB	SB
Entry Lanes	1	1	1	1
Conflicting Circle Lanes	1	1	1	1
Adj Approach Flow, veh/h	427	318	16	24
Demand Flow Rate, veh/h	435	324	16	24
Vehicles Circulating, veh/h	22	18	424	333
Vehicles Exiting, veh/h	335	422	33	9
Ped Vol Crossing Leg, #/h	10	10	10	10
Ped Cap Adj	0.999	0.999	0.999	0.999
Approach Delay, s/veh	5.6	4.8	4.2	3.9
Approach LOS	A	A	A	A

Lane	Left	Left	Left	Left
Designated Moves	LTR	LTR	LTR	LTR
Assumed Moves	LTR	LTR	LTR	LTR
RT Channelized				
Lane Util	1.000	1.000	1.000	1.000
Follow-Up Headway, s	2.609	2.609	2.609	2.609
Critical Headway, s	4.976	4.976	4.976	4.976
Entry Flow, veh/h	435	324	16	24
Cap Entry Lane, veh/h	1349	1355	895	983
Entry HV Adj Factor	0.981	0.981	0.995	0.993
Flow Entry, veh/h	427	318	16	24
Cap Entry, veh/h	1322	1327	890	975
V/C Ratio	0.323	0.239	0.018	0.024
Control Delay, s/veh	5.6	4.8	4.2	3.9
LOS	A	A	A	A
95th %tile Queue, veh	1	1	0	0

APPENDIX K

YEAR 2040 + PHASES 1, 2, 3 + PHASE 4 (SPECIFIC PLAN BUILDOUT) INTERSECTION ANALYSIS WORKSHEETS

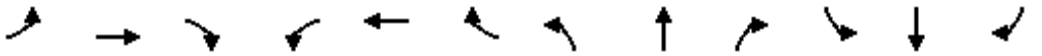

Movement	EBL	EBT	EBR	WBL	WBT	WBR	NBL	NBT	NBR	SBL	SBT	SBR
Lane Configurations												
Traffic Volume (veh/h)	119	254	221	104	263	111	145	894	93	135	632	110
Future Volume (veh/h)	119	254	221	104	263	111	145	894	93	135	632	110
Initial Q (Qb), veh	0	0	0	0	0	0	0	0	0	0	0	0
Ped-Bike Adj(A_pbT)	1.00		0.97	1.00		0.97	1.00		0.96	1.00		0.96
Parking Bus, Adj	1.00	1.00	1.00	1.00	1.00	1.00	1.00	1.00	1.00	1.00	1.00	1.00
Work Zone On Approach		No			No			No			No	
Adj Sat Flow, veh/h/ln	1870	1870	1870	1870	1870	1870	1870	1870	1870	1870	1870	1870
Adj Flow Rate, veh/h	168	358	311	162	411	173	186	1146	68	199	929	162
Peak Hour Factor	0.71	0.71	0.71	0.64	0.64	0.64	0.78	0.78	0.78	0.68	0.68	0.68
Percent Heavy Veh, %	2	2	2	2	2	2	2	2	2	2	2	2
Cap, veh/h	196	462	379	190	456	374	196	1221	72	181	1054	184
Arrive On Green	0.11	0.25	0.25	0.11	0.24	0.24	0.11	0.36	0.36	0.10	0.35	0.35
Sat Flow, veh/h	1781	1870	1533	1781	1870	1533	1781	3399	201	1781	3001	523
Grp Volume(v), veh/h	168	358	311	162	411	173	186	599	615	199	550	541
Grp Sat Flow(s),veh/h/ln	1781	1870	1533	1781	1870	1533	1781	1777	1823	1781	1777	1748
Q Serve(g_s), s	11.3	21.7	23.4	10.9	26.0	11.7	12.7	39.7	39.8	12.4	35.5	35.5
Cycle Q Clear(g_c), s	11.3	21.7	23.4	10.9	26.0	11.7	12.7	39.7	39.8	12.4	35.5	35.5
Prop In Lane	1.00		1.00	1.00		1.00	1.00		0.11	1.00		0.30
Lane Grp Cap(c), veh/h	196	462	379	190	456	374	196	638	655	181	624	614
V/C Ratio(X)	0.86	0.77	0.82	0.85	0.90	0.46	0.95	0.94	0.94	1.10	0.88	0.88
Avail Cap(c_a), veh/h	345	497	407	340	492	403	196	638	655	181	624	614
HCM Platoon Ratio	1.00	1.00	1.00	1.00	1.00	1.00	1.00	1.00	1.00	1.00	1.00	1.00
Upstream Filter(I)	1.00	1.00	1.00	0.17	0.17	0.17	0.30	0.30	0.30	1.00	1.00	1.00
Uniform Delay (d), s/veh	53.4	42.7	43.4	53.6	44.7	39.3	54.0	37.8	37.8	54.8	37.2	37.2
Incr Delay (d2), s/veh	4.2	6.1	10.8	0.7	3.9	0.1	23.5	9.5	9.5	95.9	16.4	16.7
Initial Q Delay(d3),s/veh	0.0	0.0	0.0	0.0	0.0	0.0	0.0	0.0	0.0	0.0	0.0	0.0
%ile BackOfQ(50%),veh/ln	5.2	10.7	9.9	4.9	12.4	4.4	6.9	18.7	19.2	10.4	18.0	17.8
Unsig. Movement Delay, s/veh												
LnGrp Delay(d),s/veh	57.5	48.9	54.2	54.3	48.6	39.4	77.5	47.3	47.3	150.7	53.6	53.9
LnGrp LOS	E	D	D	D	D	D	E	D	D	F	D	D
Approach Vol, veh/h		837			746			1400			1290	
Approach Delay, s/veh		52.6			47.7			51.3			68.7	
Approach LOS		D			D			D			E	

Timer - Assigned Phs	1	2	3	4	5	6	7	8
Phs Duration (G+Y+Rc), s	18.0	49.5	18.6	35.9	19.0	48.5	19.0	35.4
Change Period (Y+Rc), s	5.6	5.7	5.6	5.7	5.6	5.7	5.6	5.7
Max Green Setting (Gmax), s	12.4	31.3	23.3	32.4	13.4	30.3	23.6	32.1
Max Q Clear Time (g_c+I1), s	14.4	41.8	12.9	25.4	14.7	37.5	13.3	28.0
Green Ext Time (p_c), s	0.0	0.0	0.1	1.3	0.0	0.0	0.2	0.8

Intersection Summary	
HCM 6th Ctrl Delay	56.2
HCM 6th LOS	E



Movement	EBL	EBT	EBR	WBL	WBT	WBR	NBL	NBT	NBR	SBL	SBT	SBR
Lane Configurations												
Traffic Volume (veh/h)	86	288	112	22	300	34	178	711	30	85	466	100
Future Volume (veh/h)	86	288	112	22	300	34	178	711	30	85	466	100
Initial Q (Qb), veh	0	0	0	0	0	0	0	0	0	0	0	0
Ped-Bike Adj(A_pbT)	1.00		0.98	1.00		0.97	1.00		1.00	1.00		0.95
Parking Bus, Adj	1.00	1.00	1.00	1.00	1.00	1.00	1.00	1.00	1.00	1.00	1.00	1.00
Work Zone On Approach		No			No			No			No	
Adj Sat Flow, veh/h/ln	1870	1870	1870	1870	1870	1870	1870	1870	1870	1870	1870	1870
Adj Flow Rate, veh/h	126	424	106	31	429	6	237	948	0	127	696	89
Peak Hour Factor	0.68	0.68	0.68	0.70	0.70	0.70	0.75	0.75	0.75	0.67	0.67	0.67
Percent Heavy Veh, %	2	2	2	2	2	2	2	2	2	2	2	2
Cap, veh/h	190	625	156	63	486	7	279	1187	0	159	840	107
Arrive On Green	0.11	0.43	0.43	0.29	0.29	0.29	0.16	0.33	0.00	0.09	0.27	0.27
Sat Flow, veh/h	1781	1436	359	69	1695	23	1781	3647	0	1781	3147	402
Grp Volume(v), veh/h	126	0	530	466	0	0	237	948	0	127	393	392
Grp Sat Flow(s),veh/h/ln	1781	0	1795	1786	0	0	1781	1777	0	1781	1777	1772
Q Serve(g_s), s	6.1	0.0	21.2	12.1	0.0	0.0	11.6	21.7	0.0	6.3	18.7	18.7
Cycle Q Clear(g_c), s	6.1	0.0	21.2	22.4	0.0	0.0	11.6	21.7	0.0	6.3	18.7	18.7
Prop In Lane	1.00		0.20	0.07		0.01	1.00		0.00	1.00		0.23
Lane Grp Cap(c), veh/h	190	0	781	555	0	0	279	1187	0	159	474	473
V/C Ratio(X)	0.66	0.00	0.68	0.84	0.00	0.00	0.85	0.80	0.00	0.80	0.83	0.83
Avail Cap(c_a), veh/h	423	0	1091	628	0	0	483	1589	0	252	565	563
HCM Platoon Ratio	1.00	1.00	1.00	1.00	1.00	1.00	1.00	1.00	1.00	1.00	1.00	1.00
Upstream Filter(I)	1.00	0.00	1.00	1.00	0.00	0.00	1.00	1.00	0.00	1.00	1.00	1.00
Uniform Delay (d), s/veh	38.5	0.0	20.3	30.6	0.0	0.0	36.8	27.1	0.0	40.0	30.9	31.0
Incr Delay (d2), s/veh	3.9	0.0	1.0	9.0	0.0	0.0	7.1	2.2	0.0	8.9	8.6	8.7
Initial Q Delay(d3),s/veh	0.0	0.0	0.0	0.0	0.0	0.0	0.0	0.0	0.0	0.0	0.0	0.0
%ile BackOfQ(50%),veh/ln	2.8	0.0	8.5	10.6	0.0	0.0	5.5	9.2	0.0	3.1	8.9	8.9
Unsig. Movement Delay, s/veh												
LnGrp Delay(d),s/veh	42.4	0.0	21.4	39.6	0.0	0.0	43.8	29.3	0.0	49.0	39.6	39.7
LnGrp LOS	D	A	C	D	A	A	D	C	A	D	D	D
Approach Vol, veh/h		656			466			1185			912	
Approach Delay, s/veh		25.4			39.6			32.2			40.9	
Approach LOS		C			D			C			D	

Timer - Assigned Phs	1	2		4	5	6	7	8
Phs Duration (G+Y+Rc), s	11.7	34.5		43.5	17.8	28.4	13.3	30.2
Change Period (Y+Rc), s	3.7	4.5		4.5	3.7	4.5	3.7	4.5
Max Green Setting (Gmax), s	12.3	40.1		54.5	24.3	28.5	21.3	29.5
Max Q Clear Time (g_c+I1), s	8.3	23.7		23.2	13.6	20.7	8.1	24.4
Green Ext Time (p_c), s	0.1	6.2		3.7	0.5	3.0	0.2	1.3

Intersection Summary		
HCM 6th Ctrl Delay		34.4
HCM 6th LOS		C



Movement	EBL	EBT	EBR	WBL	WBT	WBR	NBL	NBT	NBR	SBL	SBT	SBR
Lane Configurations												
Traffic Volume (veh/h)	48	210	96	112	150	219	69	755	130	128	593	17
Future Volume (veh/h)	48	210	96	112	150	219	69	755	130	128	593	17
Initial Q (Qb), veh	0	0	0	0	0	0	0	0	0	0	0	0
Ped-Bike Adj(A_pbT)	1.00		0.97	1.00		0.96	1.00		0.95	1.00		0.95
Parking Bus, Adj	1.00	1.00	1.00	1.00	1.00	1.00	1.00	1.00	1.00	1.00	1.00	1.00
Work Zone On Approach		No			No			No			No	
Adj Sat Flow, veh/h/ln	1870	1870	1870	1870	1870	1870	1870	1870	1870	1870	1870	1870
Adj Flow Rate, veh/h	62	269	123	137	183	267	78	858	148	154	714	20
Peak Hour Factor	0.78	0.78	0.78	0.82	0.82	0.82	0.88	0.88	0.88	0.83	0.83	0.83
Percent Heavy Veh, %	2	2	2	2	2	2	2	2	2	2	2	2
Cap, veh/h	63	272	124	164	219	319	98	795	137	177	1090	31
Arrive On Green	0.26	0.26	0.26	0.21	0.21	0.21	0.05	0.26	0.26	0.10	0.31	0.31
Sat Flow, veh/h	240	1040	475	784	1047	1527	1781	3002	518	1781	3525	99
Grp Volume(v), veh/h	454	0	0	320	0	267	78	508	498	154	360	374
Grp Sat Flow(s),veh/h/ln	1755	0	0	1831	0	1527	1781	1777	1743	1781	1777	1847
Q Serve(g_s), s	36.4	0.0	0.0	23.7	0.0	23.7	6.1	37.4	37.4	12.0	24.8	24.8
Cycle Q Clear(g_c), s	36.4	0.0	0.0	23.7	0.0	23.7	6.1	37.4	37.4	12.0	24.8	24.8
Prop In Lane	0.14		0.27	0.43		1.00	1.00		0.30	1.00		0.05
Lane Grp Cap(c), veh/h	459	0	0	383	0	319	98	470	462	177	550	571
V/C Ratio(X)	0.99	0.00	0.00	0.84	0.00	0.84	0.80	1.08	1.08	0.87	0.65	0.66
Avail Cap(c_a), veh/h	459	0	0	480	0	400	112	470	462	193	551	573
HCM Platoon Ratio	1.00	1.00	1.00	1.00	1.00	1.00	1.00	1.00	1.00	1.00	1.00	1.00
Upstream Filter(I)	1.00	0.00	0.00	1.00	0.00	1.00	1.00	1.00	1.00	1.00	1.00	1.00
Uniform Delay (d), s/veh	51.9	0.0	0.0	53.5	0.0	53.5	66.0	51.9	51.9	62.7	42.3	42.3
Incr Delay (d2), s/veh	38.7	0.0	0.0	10.1	0.0	11.8	25.2	64.6	65.0	28.8	5.1	4.9
Initial Q Delay(d3),s/veh	0.0	0.0	0.0	0.0	0.0	0.0	0.0	0.0	0.0	0.0	0.0	0.0
%ile BackOfQ(50%),veh/ln	20.8	0.0	0.0	11.9	0.0	10.1	3.4	24.8	24.3	6.8	11.5	11.9
Unsig. Movement Delay, s/veh												
LnGrp Delay(d),s/veh	90.7	0.0	0.0	63.6	0.0	65.4	91.2	116.5	116.9	91.5	47.4	47.2
LnGrp LOS	F	A	A	E	A	E	F	F	F	F	D	D
Approach Vol, veh/h		454			587			1084			888	
Approach Delay, s/veh		90.7			64.4			114.9			55.0	
Approach LOS		F			E			F			D	

Timer - Assigned Phs	1	2		4	5	6		8
Phs Duration (G+Y+Rc), s	13.4	49.1		35.6	19.7	42.8		43.1
Change Period (Y+Rc), s	* 5.7	5.4		6.1	* 5.7	5.4		6.1
Max Green Setting (Gmax), s	* 8.3	43.8		37.0	* 15	37.4		37.0
Max Q Clear Time (g_c+I1), s	10.1	26.8		25.7	14.0	39.4		38.4
Green Ext Time (p_c), s	0.0	8.5		2.2	0.0	0.0		0.0

Intersection Summary	
HCM 6th Ctrl Delay	83.7
HCM 6th LOS	F

Notes

* HCM 6th computational engine requires equal clearance times for the phases crossing the barrier.



Movement	EBL	EBT	EBR	WBL	WBT	WBR	NBL	NBT	NBR	SBL	SBT	SBR
Lane Configurations												
Traffic Volume (veh/h)	69	98	122	60	153	62	161	566	102	30	457	65
Future Volume (veh/h)	69	98	122	60	153	62	161	566	102	30	457	65
Initial Q (Qb), veh	0	0	0	0	0	0	0	0	0	0	0	0
Ped-Bike Adj(A_pbT)	1.00		0.91	1.00		0.94	1.00		0.96	1.00		0.95
Parking Bus, Adj	1.00	1.00	1.00	1.00	1.00	1.00	1.00	1.00	1.00	1.00	1.00	1.00
Work Zone On Approach		No			No			No			No	
Adj Sat Flow, veh/h/ln	1870	1870	1870	1870	1870	1870	1870	1870	1870	1870	1870	1870
Adj Flow Rate, veh/h	79	113	140	72	184	75	189	666	120	39	594	84
Peak Hour Factor	0.87	0.87	0.87	0.83	0.83	0.83	0.85	0.85	0.85	0.77	0.77	0.77
Percent Heavy Veh, %	2	2	2	2	2	2	2	2	2	2	2	2
Cap, veh/h	93	133	178	80	204	83	217	657	118	56	633	512
Arrive On Green	0.12	0.12	0.12	0.21	0.21	0.21	0.12	0.43	0.43	0.03	0.34	0.34
Sat Flow, veh/h	754	1079	1445	381	973	396	1781	1531	276	1781	1870	1513
Grp Volume(v), veh/h	192	0	140	331	0	0	189	0	786	39	594	84
Grp Sat Flow(s),veh/h/ln	1833	0	1445	1750	0	0	1781	0	1807	1781	1870	1513
Q Serve(g_s), s	11.5	0.0	10.6	20.7	0.0	0.0	11.7	0.0	48.2	2.4	34.6	4.4
Cycle Q Clear(g_c), s	11.5	0.0	10.6	20.7	0.0	0.0	11.7	0.0	48.2	2.4	34.6	4.4
Prop In Lane	0.41		1.00	0.22		0.23	1.00		0.15	1.00		1.00
Lane Grp Cap(c), veh/h	226	0	178	367	0	0	217	0	775	56	633	512
V/C Ratio(X)	0.85	0.00	0.78	0.90	0.00	0.00	0.87	0.00	1.01	0.70	0.94	0.16
Avail Cap(c_a), veh/h	279	0	220	406	0	0	228	0	775	86	653	528
HCM Platoon Ratio	1.00	1.00	1.00	1.00	1.00	1.00	1.00	1.00	1.00	1.00	1.00	1.00
Upstream Filter(I)	1.00	0.00	1.00	1.00	0.00	0.00	1.00	0.00	1.00	1.00	1.00	1.00
Uniform Delay (d), s/veh	48.2	0.0	47.8	43.3	0.0	0.0	48.5	0.0	32.1	53.9	36.0	26.0
Incr Delay (d2), s/veh	15.5	0.0	11.0	20.3	0.0	0.0	26.4	0.0	35.8	5.7	20.7	0.1
Initial Q Delay(d3),s/veh	0.0	0.0	0.0	0.0	0.0	0.0	0.0	0.0	0.0	0.0	0.0	0.0
%ile BackOfQ(50%),veh/ln	6.2	0.0	4.3	10.9	0.0	0.0	6.6	0.0	27.1	1.2	18.5	1.5
Unsig. Movement Delay, s/veh												
LnGrp Delay(d),s/veh	63.7	0.0	58.7	63.6	0.0	0.0	74.9	0.0	67.9	59.6	56.7	26.1
LnGrp LOS	E	A	E	E	A	A	E	A	F	E	E	C
Approach Vol, veh/h		332			331			975			717	
Approach Delay, s/veh		61.6			63.6			69.3			53.3	
Approach LOS		E			E			E			D	

Timer - Assigned Phs	1	2		4	5	6		8
Phs Duration (G+Y+Rc), s	9.1	54.0		19.8	19.3	43.8		29.5
Change Period (Y+Rc), s	5.6	5.8		5.9	5.6	5.8		5.9
Max Green Setting (Gmax), s	5.4	48.2		17.1	14.4	39.2		26.1
Max Q Clear Time (g_c+I1), s	4.4	50.2		13.5	13.7	36.6		22.7
Green Ext Time (p_c), s	0.0	0.0		0.4	0.0	0.7		0.4

Intersection Summary		
HCM 6th Ctrl Delay		62.5
HCM 6th LOS		E

Intersection	
Intersection Delay, s/veh	163.2
Intersection LOS	F

Movement	EBL	EBT	EBR	WBL	WBT	WBR	NBL	NBT	NBR	SBL	SBT	SBR
Lane Configurations												
Traffic Vol, veh/h	62	176	93	50	132	129	123	689	74	112	433	35
Future Vol, veh/h	62	176	93	50	132	129	123	689	74	112	433	35
Peak Hour Factor	0.73	0.73	0.73	0.74	0.74	0.74	0.78	0.78	0.78	0.66	0.66	0.66
Heavy Vehicles, %	2	2	2	2	2	2	2	2	2	2	2	2
Mvmt Flow	85	241	127	68	178	174	158	883	95	170	656	53
Number of Lanes	0	1	0	0	1	0	1	2	0	1	2	0

Approach	EB	WB	NB	SB
Opposing Approach	WB	EB	SB	NB
Opposing Lanes	1	1	3	3
Conflicting Approach Left	SB	NB	EB	WB
Conflicting Lanes Left	3	3	1	1
Conflicting Approach Right	NB	SB	WB	EB
Conflicting Lanes Right	3	3	1	1
HCM Control Delay	211.1	168.2	199.2	89.7
HCM LOS	F	F	F	F

Lane	NBLn1	NBLn2	NBLn3	EBLn1	WBLn1	SBLn1	SBLn2	SBLn3
Vol Left, %	100%	0%	0%	19%	16%	100%	0%	0%
Vol Thru, %	0%	100%	76%	53%	42%	0%	100%	80%
Vol Right, %	0%	0%	24%	28%	41%	0%	0%	20%
Sign Control	Stop	Stop	Stop	Stop	Stop	Stop	Stop	Stop
Traffic Vol by Lane	123	459	304	331	311	112	289	179
LT Vol	123	0	0	62	50	112	0	0
Through Vol	0	459	230	176	132	0	289	144
RT Vol	0	0	74	93	129	0	0	35
Lane Flow Rate	158	589	389	453	420	170	437	272
Geometry Grp	7	7	7	7	7	7	7	7
Degree of Util (X)	0.452	1.607	1.044	1.351	1.239	0.488	1.198	0.734
Departure Headway (Hd)	11.767	11.224	11.039	12.311	12.48	11.495	10.952	10.804
Convergence, Y/N	Yes	Yes	Yes	Yes	Yes	Yes	Yes	Yes
Cap	309	330	331	299	294	316	337	337
Service Time	9.467	8.924	8.739	10.011	10.18	9.195	8.652	8.504
HCM Lane V/C Ratio	0.511	1.785	1.175	1.515	1.429	0.538	1.297	0.807
HCM Control Delay	23.8	314.1	96.3	211.1	168.2	24.7	147	38.2
HCM Lane LOS	C	F	F	F	F	C	F	E
HCM 95th-tile Q	2.2	30.6	12.2	20.2	16.7	2.5	16.9	5.5



Movement	EBL	EBT	EBR	WBL	WBT	WBR	NBL	NBT	NBR	SBL	SBT	SBR
Lane Configurations												
Traffic Volume (veh/h)	118	90	189	68	93	22	106	810	32	14	691	38
Future Volume (veh/h)	118	90	189	68	93	22	106	810	32	14	691	38
Initial Q (Qb), veh	0	0	0	0	0	0	0	0	0	0	0	0
Ped-Bike Adj(A_pbT)	1.00		0.96	1.00		0.96	1.00		0.96	1.00		0.95
Parking Bus, Adj	1.00	1.00	1.00	1.00	1.00	1.00	1.00	1.00	1.00	1.00	1.00	1.00
Work Zone On Approach		No			No			No			No	
Adj Sat Flow, veh/h/ln	1870	1870	1870	1870	1870	1870	1870	1870	1870	1870	1870	1870
Adj Flow Rate, veh/h	144	110	230	106	145	3	126	964	38	17	833	46
Peak Hour Factor	0.82	0.82	0.82	0.64	0.64	0.64	0.84	0.84	0.84	0.83	0.83	0.83
Percent Heavy Veh, %	2	2	2	2	2	2	2	2	2	2	2	2
Cap, veh/h	192	146	283	138	189	4	157	1345	53	55	1124	62
Arrive On Green	0.19	0.19	0.19	0.18	0.18	0.18	0.09	0.39	0.39	0.03	0.33	0.33
Sat Flow, veh/h	1031	788	1523	763	1043	22	1781	3478	137	1781	3414	189
Grp Volume(v), veh/h	254	0	230	254	0	0	126	492	510	17	433	446
Grp Sat Flow(s),veh/h/ln	1819	0	1523	1827	0	0	1781	1777	1839	1781	1777	1826
Q Serve(g_s), s	12.0	0.0	13.1	12.0	0.0	0.0	6.3	21.3	21.3	0.8	19.6	19.6
Cycle Q Clear(g_c), s	12.0	0.0	13.1	12.0	0.0	0.0	6.3	21.3	21.3	0.8	19.6	19.6
Prop In Lane	0.57		1.00	0.42		0.01	1.00		0.07	1.00		0.10
Lane Grp Cap(c), veh/h	338	0	283	332	0	0	157	687	711	55	585	601
V/C Ratio(X)	0.75	0.00	0.81	0.77	0.00	0.00	0.80	0.72	0.72	0.31	0.74	0.74
Avail Cap(c_a), veh/h	507	0	425	570	0	0	242	756	783	163	678	697
HCM Platoon Ratio	1.00	1.00	1.00	1.00	1.00	1.00	1.00	1.00	1.00	1.00	1.00	1.00
Upstream Filter(I)	1.00	0.00	1.00	1.00	0.00	0.00	1.00	1.00	1.00	1.00	1.00	1.00
Uniform Delay (d), s/veh	34.9	0.0	35.4	35.3	0.0	0.0	40.6	23.6	23.6	43.0	27.0	27.0
Incr Delay (d2), s/veh	3.4	0.0	7.1	3.7	0.0	0.0	5.3	5.4	5.2	1.2	7.0	6.9
Initial Q Delay(d3),s/veh	0.0	0.0	0.0	0.0	0.0	0.0	0.0	0.0	0.0	0.0	0.0	0.0
%ile BackOfQ(50%),veh/ln	5.5	0.0	5.3	5.6	0.0	0.0	2.9	9.3	9.6	0.4	8.9	9.1
Unsig. Movement Delay, s/veh												
LnGrp Delay(d),s/veh	38.3	0.0	42.5	39.0	0.0	0.0	45.8	29.0	28.8	44.2	34.0	33.8
LnGrp LOS	D	A	D	D	A	A	D	C	C	D	C	C
Approach Vol, veh/h		484			254			1128			896	
Approach Delay, s/veh		40.3			39.0			30.8			34.1	
Approach LOS		D			D			C			C	

Timer - Assigned Phs	1	2		4	5	6		8
Phs Duration (G+Y+Rc), s	12.7	35.3		21.2	7.5	40.5		21.6
Change Period (Y+Rc), s	* 4.7	5.4		* 4.7	* 4.7	5.4		4.7
Max Green Setting (Gmax), s	* 13	34.6		* 28	* 8.3	38.6		25.3
Max Q Clear Time (g_c+I1), s	8.3	21.6		14.0	2.8	23.3		15.1
Green Ext Time (p_c), s	0.1	8.2		1.2	0.0	10.4		1.7

Intersection Summary	
HCM 6th Ctrl Delay	34.3
HCM 6th LOS	C

Notes

* HCM 6th computational engine requires equal clearance times for the phases crossing the barrier.



Movement	EBL	EBT	EBR	WBL	WBT	WBR	NBL	NBT	NBR	SBL	SBT	SBR
Lane Configurations												
Traffic Volume (veh/h)	189	138	370	51	128	64	275	884	53	34	567	108
Future Volume (veh/h)	189	138	370	51	128	64	275	884	53	34	567	108
Initial Q (Qb), veh	0	0	0	0	0	0	0	0	0	0	0	0
Ped-Bike Adj(A_pbT)	1.00		0.98	1.00		0.97	1.00		0.96	1.00		0.97
Parking Bus, Adj	1.00	1.00	1.00	1.00	1.00	1.00	1.00	1.00	1.00	1.00	1.00	1.00
Work Zone On Approach		No			No			No			No	
Adj Sat Flow, veh/h/ln	1870	1870	1870	1870	1870	1870	1870	1870	1870	1870	1870	1870
Adj Flow Rate, veh/h	262	192	514	60	151	75	367	1179	71	47	788	150
Peak Hour Factor	0.72	0.72	0.72	0.85	0.85	0.85	0.75	0.75	0.75	0.72	0.72	0.72
Percent Heavy Veh, %	2	2	2	2	2	2	2	2	2	2	2	2
Cap, veh/h	212	752	622	92	195	88	304	1391	84	61	808	154
Arrive On Green	0.12	0.40	0.40	0.23	0.23	0.23	0.17	0.41	0.41	0.03	0.27	0.27
Sat Flow, veh/h	1781	1870	1546	227	834	377	1781	3396	204	1781	2961	564
Grp Volume(v), veh/h	262	192	514	286	0	0	367	616	634	47	473	465
Grp Sat Flow(s),veh/h/ln	1781	1870	1546	1439	0	0	1781	1777	1823	1781	1777	1748
Q Serve(g_s), s	13.5	7.8	33.8	15.8	0.0	0.0	19.4	35.6	35.7	3.0	29.9	30.0
Cycle Q Clear(g_c), s	13.5	7.8	33.8	21.2	0.0	0.0	19.4	35.6	35.7	3.0	29.9	30.0
Prop In Lane	1.00		1.00	0.21		0.26	1.00		0.11	1.00		0.32
Lane Grp Cap(c), veh/h	212	752	622	375	0	0	304	728	747	61	485	477
V/C Ratio(X)	1.24	0.26	0.83	0.76	0.00	0.00	1.21	0.85	0.85	0.78	0.98	0.98
Avail Cap(c_a), veh/h	212	858	709	452	0	0	304	728	747	100	485	477
HCM Platoon Ratio	1.00	1.00	1.00	1.00	1.00	1.00	1.00	1.00	1.00	1.00	1.00	1.00
Upstream Filter(I)	1.00	1.00	1.00	1.00	0.00	0.00	1.00	1.00	1.00	1.00	1.00	1.00
Uniform Delay (d), s/veh	50.0	22.6	30.4	40.9	0.0	0.0	47.1	30.3	30.3	54.4	40.9	40.9
Incr Delay (d2), s/veh	140.6	0.1	6.3	4.8	0.0	0.0	119.7	9.5	9.4	7.6	34.5	34.8
Initial Q Delay(d3),s/veh	0.0	0.0	0.0	0.0	0.0	0.0	0.0	0.0	0.0	0.0	0.0	0.0
%ile BackOfQ(50%),veh/ln	14.2	3.4	13.4	8.0	0.0	0.0	18.6	16.8	17.2	1.5	17.6	17.3
Unsig. Movement Delay, s/veh												
LnGrp Delay(d),s/veh	190.6	22.7	36.7	45.7	0.0	0.0	166.8	39.8	39.7	62.1	75.4	75.7
LnGrp LOS	F	C	D	D	A	A	F	D	D	E	E	E
Approach Vol, veh/h		968			286			1617			985	
Approach Delay, s/veh		75.6			45.7			68.6			74.9	
Approach LOS		E			D			E			E	

Timer - Assigned Phs	1	2		4	5	6	7	8
Phs Duration (G+Y+Rc), s	9.5	52.2		51.9	25.0	36.7	19.1	32.8
Change Period (Y+Rc), s	5.6	5.7		6.2	5.6	5.7	5.6	6.2
Max Green Setting (Gmax), s	6.4	44.0		52.1	19.4	31.0	13.5	33.0
Max Q Clear Time (g_c+I1), s	15.5	37.7		35.8	21.4	32.0	15.5	23.2
Green Ext Time (p_c), s	0.0	4.7		1.7	0.0	0.0	0.0	1.0

Intersection Summary	
HCM 6th Ctrl Delay	70.3
HCM 6th LOS	E



Movement	EBL	EBT	EBR	WBL	WBT	WBR	NBL	NBT	NBR	SBL	SBT	SBR
Lane Configurations												
Traffic Volume (veh/h)	0	0	0	280	1	356	297	783	0	0	962	111
Future Volume (veh/h)	0	0	0	280	1	356	297	783	0	0	962	111
Initial Q (Qb), veh				0	0	0	0	0	0	0	0	0
Ped-Bike Adj(A_pbT)				1.00		0.97	1.00		1.00	1.00		0.96
Parking Bus, Adj				1.00	1.00	1.00	1.00	1.00	1.00	1.00	1.00	1.00
Work Zone On Approach					No			No			No	
Adj Sat Flow, veh/h/ln				1870	1870	1870	1870	1870	0	0	1870	1870
Adj Flow Rate, veh/h				359	1	456	316	833	0	0	1119	129
Peak Hour Factor				0.78	0.78	0.78	0.94	0.94	0.94	0.86	0.86	0.86
Percent Heavy Veh, %				2	2	2	2	2	0	0	2	2
Cap, veh/h				561	2	486	293	2114	0	0	1247	143
Arrive On Green				0.32	0.32	0.32	0.16	0.59	0.00	0.00	0.39	0.39
Sat Flow, veh/h				1777	5	1540	1781	3647	0	0	3288	368
Grp Volume(v), veh/h				360	0	456	316	833	0	0	621	627
Grp Sat Flow(s),veh/h/ln				1782	0	1540	1781	1777	0	0	1777	1785
Q Serve(g_s), s				20.3	0.0	33.8	19.3	14.6	0.0	0.0	38.5	38.7
Cycle Q Clear(g_c), s				20.3	0.0	33.8	19.3	14.6	0.0	0.0	38.5	38.7
Prop In Lane				1.00		1.00	1.00		0.00	0.00		0.21
Lane Grp Cap(c), veh/h				563	0	486	293	2114	0	0	694	697
V/C Ratio(X)				0.64	0.00	0.94	1.08	0.39	0.00	0.00	0.90	0.90
Avail Cap(c_a), veh/h				590	0	510	293	2136	0	0	705	708
HCM Platoon Ratio				1.00	1.00	1.00	1.00	1.00	1.00	1.00	1.00	1.00
Upstream Filter(I)				1.00	0.00	1.00	1.00	1.00	0.00	0.00	1.00	1.00
Uniform Delay (d), s/veh				34.4	0.0	39.0	49.1	12.6	0.0	0.0	33.6	33.6
Incr Delay (d2), s/veh				2.2	0.0	24.6	75.4	0.4	0.0	0.0	15.8	16.1
Initial Q Delay(d3),s/veh				0.0	0.0	0.0	0.0	0.0	0.0	0.0	0.0	0.0
%ile BackOfQ(50%),veh/ln				9.1	0.0	15.9	14.5	5.5	0.0	0.0	18.8	19.1
Unsig. Movement Delay, s/veh												
LnGrp Delay(d),s/veh				36.6	0.0	63.7	124.4	13.0	0.0	0.0	49.4	49.8
LnGrp LOS				D	A	E	F	B	A	A	D	D
Approach Vol, veh/h					816			1149			1248	
Approach Delay, s/veh					51.7			43.7			49.6	
Approach LOS					D			D			D	

Timer - Assigned Phs	1	2		4		6						
Phs Duration (G+Y+Rc), s	24.0	51.2		42.2		75.2						
Change Period (Y+Rc), s	4.7	5.4		5.1		5.4						
Max Green Setting (Gmax), s	19.3	46.6		38.9		70.6						
Max Q Clear Time (g_c+I1), s	21.3	40.7		35.8		16.6						
Green Ext Time (p_c), s	0.0	5.1		1.3		18.3						

Intersection Summary	
HCM 6th Ctrl Delay	48.0
HCM 6th LOS	D

Notes

* HCM 6th computational engine requires equal clearance times for the phases crossing the barrier.



Movement	EBL	EBT	EBR	WBL	WBT	WBR	NBL	NBT	NBR	SBL	SBT	SBR
Lane Configurations												
Traffic Volume (veh/h)	86	1	342	0	0	0	0	992	223	275	967	0
Future Volume (veh/h)	86	1	342	0	0	0	0	992	223	275	967	0
Initial Q (Qb), veh	0	0	0				0	0	0	0	0	0
Ped-Bike Adj(A_pbT)	1.00		0.97				1.00		0.95	1.00		1.00
Parking Bus, Adj	1.00	1.00	1.00				1.00	1.00	1.00	1.00	1.00	1.00
Work Zone On Approach		No						No			No	
Adj Sat Flow, veh/h/ln	1870	1870	1870				0	1870	1870	1870	1870	0
Adj Flow Rate, veh/h	143	2	570				0	1115	251	316	1111	0
Peak Hour Factor	0.60	0.60	0.60				0.89	0.89	0.89	0.87	0.87	0.87
Percent Heavy Veh, %	2	2	2				0	2	2	2	2	0
Cap, veh/h	124	2	495				0	995	421	346	1833	0
Arrive On Green	0.39	0.39	0.39				0.00	0.28	0.28	0.19	0.52	0.00
Sat Flow, veh/h	318	4	1266				0	3647	1505	1781	3647	0
Grp Volume(v), veh/h	715	0	0				0	1115	251	316	1111	0
Grp Sat Flow(s),veh/h/ln	1588	0	0				0	1777	1505	1781	1777	0
Q Serve(g_s), s	44.0	0.0	0.0				0.0	31.5	16.2	19.6	24.8	0.0
Cycle Q Clear(g_c), s	44.0	0.0	0.0				0.0	31.5	16.2	19.6	24.8	0.0
Prop In Lane	0.20		0.80				0.00		1.00	1.00		0.00
Lane Grp Cap(c), veh/h	621	0	0				0	995	421	346	1833	0
V/C Ratio(X)	1.15	0.00	0.00				0.00	1.12	0.60	0.91	0.61	0.00
Avail Cap(c_a), veh/h	621	0	0				0	995	421	464	2068	0
HCM Platoon Ratio	1.00	1.00	1.00				1.00	1.00	1.00	1.00	1.00	1.00
Upstream Filter(I)	1.00	0.00	0.00				0.00	1.00	1.00	1.00	1.00	0.00
Uniform Delay (d), s/veh	34.3	0.0	0.0				0.0	40.5	35.0	44.4	19.2	0.0
Incr Delay (d2), s/veh	85.8	0.0	0.0				0.0	67.9	5.1	16.1	1.2	0.0
Initial Q Delay(d3),s/veh	0.0	0.0	0.0				0.0	0.0	0.0	0.0	0.0	0.0
%ile BackOfQ(50%),veh/ln	31.3	0.0	0.0				0.0	22.6	6.4	9.9	9.8	0.0
Unsig. Movement Delay, s/veh												
LnGrp Delay(d),s/veh	120.1	0.0	0.0				0.0	108.5	40.1	60.5	20.4	0.0
LnGrp LOS	F	A	A				A	F	D	E	C	A
Approach Vol, veh/h		715						1366			1427	
Approach Delay, s/veh		120.1						95.9			29.3	
Approach LOS		F						F			C	

Timer - Assigned Phs	2		5	6		8
Phs Duration (G+Y+Rc), s	63.5		26.6	36.9		49.1
Change Period (Y+Rc), s	5.4		* 4.7	5.4		5.1
Max Green Setting (Gmax), s	65.5		* 29	31.5		44.0
Max Q Clear Time (g_c+I1), s	26.8		21.6	33.5		46.0
Green Ext Time (p_c), s	22.7		0.3	0.0		0.0

Intersection Summary	
HCM 6th Ctrl Delay	73.7
HCM 6th LOS	E

Notes

* HCM 6th computational engine requires equal clearance times for the phases crossing the barrier.



Movement	EBL	EBT	EBR	WBL	WBT	WBR	NBL	NBT	NBR	SBL	SBT	SBR
Lane Configurations												
Traffic Volume (veh/h)	0	0	0	137	2	144	0	702	227	0	535	97
Future Volume (veh/h)	0	0	0	137	2	144	0	702	227	0	535	97
Initial Q (Qb), veh				0	0	0	0	0	0	0	0	0
Ped-Bike Adj(A_pbT)				1.00		0.97	1.00		0.96	1.00		0.96
Parking Bus, Adj				1.00	1.00	1.00	1.00	1.00	1.00	1.00	1.00	1.00
Work Zone On Approach					No			No			No	
Adj Sat Flow, veh/h/ln				1870	1870	1870	0	1870	1870	0	1870	1870
Adj Flow Rate, veh/h				185	3	195	0	816	264	0	645	117
Peak Hour Factor				0.74	0.74	0.74	0.86	0.86	0.86	0.83	0.83	0.83
Percent Heavy Veh, %				2	2	2	0	2	2	0	2	2
Cap, veh/h				418	7	365	0	1617	693	0	1969	351
Arrive On Green				0.24	0.24	0.24	0.00	0.46	0.46	0.00	0.46	0.46
Sat Flow, veh/h				1754	28	1532	0	3647	1524	0	4495	772
Grp Volume(v), veh/h				188	0	195	0	816	264	0	505	257
Grp Sat Flow(s),veh/h/ln				1783	0	1532	0	1777	1524	0	1702	1695
Q Serve(g_s), s				3.7	0.0	4.5	0.0	6.6	4.7	0.0	3.9	4.0
Cycle Q Clear(g_c), s				3.7	0.0	4.5	0.0	6.6	4.7	0.0	3.9	4.0
Prop In Lane				0.98		1.00	0.00		1.00	0.00		0.46
Lane Grp Cap(c), veh/h				425	0	365	0	1617	693	0	1549	771
V/C Ratio(X)				0.44	0.00	0.53	0.00	0.50	0.38	0.00	0.33	0.33
Avail Cap(c_a), veh/h				2094	0	1799	0	5193	2226	0	4975	2477
HCM Platoon Ratio				1.00	1.00	1.00	1.00	1.00	1.00	1.00	1.00	1.00
Upstream Filter(I)				1.00	0.00	1.00	0.00	1.00	1.00	0.00	1.00	1.00
Uniform Delay (d), s/veh				13.2	0.0	13.6	0.0	7.9	7.3	0.0	7.1	7.1
Incr Delay (d2), s/veh				0.7	0.0	1.2	0.0	0.2	0.3	0.0	0.1	0.3
Initial Q Delay(d3),s/veh				0.0	0.0	0.0	0.0	0.0	0.0	0.0	0.0	0.0
%ile BackOfQ(50%),veh/ln				1.3	0.0	1.4	0.0	1.6	1.0	0.0	0.9	0.9
Unsig. Movement Delay, s/veh												
LnGrp Delay(d),s/veh				13.9	0.0	14.8	0.0	8.1	7.7	0.0	7.2	7.4
LnGrp LOS				B	A	B	A	A	A	A	A	A
Approach Vol, veh/h					383			1080			762	
Approach Delay, s/veh					14.4			8.0			7.3	
Approach LOS					B			A			A	

Timer - Assigned Phs	2		6		8			
Phs Duration (G+Y+Rc), s	25.0		25.0		15.8			
Change Period (Y+Rc), s	6.4		6.4		6.1			
Max Green Setting (Gmax), s	59.6		59.6		47.9			
Max Q Clear Time (g_c+I1), s	8.6		6.0		6.5			
Green Ext Time (p_c), s	7.7		5.5		1.9			

Intersection Summary		
HCM 6th Ctrl Delay	8.8	
HCM 6th LOS	A	



Movement	EBL	EBT	EBR	WBL	WBT	WBR	NBL	NBT	NBR	SBL	SBT	SBR
Lane Configurations												
Traffic Volume (veh/h)	98	2	228	0	0	0	0	832	104	82	588	0
Future Volume (veh/h)	98	2	228	0	0	0	0	832	104	82	588	0
Initial Q (Qb), veh	0	0	0				0	0	0	0	0	0
Ped-Bike Adj(A_pbT)	1.00		0.94				1.00		0.96	1.00		1.00
Parking Bus, Adj	1.00	1.00	1.00				1.00	1.00	1.00	1.00	1.00	1.00
Work Zone On Approach		No						No			No	
Adj Sat Flow, veh/h/ln	1870	1870	1870				0	1870	1870	1870	1870	0
Adj Flow Rate, veh/h	118	2	275				0	967	121	112	805	0
Peak Hour Factor	0.83	0.83	0.83				0.86	0.86	0.86	0.73	0.73	0.73
Percent Heavy Veh, %	2	2	2				0	2	2	2	2	0
Cap, veh/h	343	6	511				0	1435	614	148	2084	0
Arrive On Green	0.20	0.20	0.20				0.00	0.40	0.40	0.08	0.59	0.00
Sat Flow, veh/h	1753	30	2613				0	3647	1520	1781	3647	0
Grp Volume(v), veh/h	120	0	275				0	967	121	112	805	0
Grp Sat Flow(s),veh/h/ln	1783	0	1306				0	1777	1520	1781	1777	0
Q Serve(g_s), s	3.3	0.0	5.4				0.0	12.8	3.0	3.5	6.9	0.0
Cycle Q Clear(g_c), s	3.3	0.0	5.4				0.0	12.8	3.0	3.5	6.9	0.0
Prop In Lane	0.98		1.00				0.00		1.00	1.00		0.00
Lane Grp Cap(c), veh/h	349	0	511				0	1435	614	148	2084	0
V/C Ratio(X)	0.34	0.00	0.54				0.00	0.67	0.20	0.76	0.39	0.00
Avail Cap(c_a), veh/h	1178	0	1727				0	2702	1155	631	4313	0
HCM Platoon Ratio	1.00	1.00	1.00				1.00	1.00	1.00	1.00	1.00	1.00
Upstream Filter(I)	1.00	0.00	1.00				0.00	1.00	1.00	1.00	1.00	0.00
Uniform Delay (d), s/veh	19.9	0.0	20.7				0.0	14.0	11.1	25.7	6.3	0.0
Incr Delay (d2), s/veh	0.6	0.0	0.9				0.0	0.6	0.2	7.6	0.1	0.0
Initial Q Delay(d3),s/veh	0.0	0.0	0.0				0.0	0.0	0.0	0.0	0.0	0.0
%ile BackOfQ(50%),veh/ln	1.3	0.0	1.6				0.0	4.2	0.8	1.7	1.7	0.0
Unsig. Movement Delay, s/veh												
LnGrp Delay(d),s/veh	20.5	0.0	21.6				0.0	14.6	11.2	33.3	6.5	0.0
LnGrp LOS	C	A	C				A	B	B	C	A	A
Approach Vol, veh/h		395						1088			917	
Approach Delay, s/veh		21.3						14.2			9.7	
Approach LOS		C						B			A	

Timer - Assigned Phs	1	2	4	6
Phs Duration (G+Y+Rc), s	10.5	29.6	17.3	40.0
Change Period (Y+Rc), s	* 5.7	6.4	6.1	6.4
Max Green Setting (Gmax), s	* 4.8	43.6	37.9	69.6
Max Q Clear Time (g_c+I1), s	5.5	14.8	7.4	8.9
Green Ext Time (p_c), s	0.2	7.9	2.0	6.3

Intersection Summary	
HCM 6th Ctrl Delay	13.7
HCM 6th LOS	B

Notes

* HCM 6th computational engine requires equal clearance times for the phases crossing the barrier.



Movement	EBL	EBT	EBR	WBL	WBT	WBR	NBL	NBT	NBR	SBL	SBT	SBR
Lane Configurations												
Traffic Volume (veh/h)	81	102	38	2	102	68	63	134	1	134	107	36
Future Volume (veh/h)	81	102	38	2	102	68	63	134	1	134	107	36
Initial Q (Qb), veh	0	0	0	0	0	0	0	0	0	0	0	0
Ped-Bike Adj(A_pbT)	1.00		0.96	1.00		0.94	1.00		0.98	1.00		0.96
Parking Bus, Adj	1.00	1.00	1.00	1.00	1.00	1.00	1.00	1.00	1.00	1.00	1.00	1.00
Work Zone On Approach		No			No			No			No	
Adj Sat Flow, veh/h/ln	1870	1870	1870	1870	1870	1870	1870	1870	1870	1870	1870	1870
Adj Flow Rate, veh/h	103	129	48	3	136	91	88	186	1	248	198	67
Peak Hour Factor	0.79	0.79	0.79	0.75	0.75	0.75	0.72	0.72	0.72	0.54	0.54	0.54
Percent Heavy Veh, %	2	2	2	2	2	2	2	2	2	2	2	2
Cap, veh/h	132	341	277	7	209	167	113	1451	631	246	1258	410
Arrive On Green	0.07	0.18	0.18	0.00	0.11	0.11	0.06	0.41	0.41	0.14	0.48	0.48
Sat Flow, veh/h	1781	1870	1522	1781	1870	1494	1781	3554	1546	1781	2606	849
Grp Volume(v), veh/h	103	129	48	3	136	91	88	186	1	248	133	132
Grp Sat Flow(s),veh/h/ln	1781	1870	1522	1781	1870	1494	1781	1777	1546	1781	1777	1678
Q Serve(g_s), s	4.1	4.4	1.9	0.1	5.0	4.2	3.5	2.4	0.0	10.0	3.0	3.2
Cycle Q Clear(g_c), s	4.1	4.4	1.9	0.1	5.0	4.2	3.5	2.4	0.0	10.0	3.0	3.2
Prop In Lane	1.00		1.00	1.00		1.00	1.00		1.00	1.00		0.51
Lane Grp Cap(c), veh/h	132	341	277	7	209	167	113	1451	631	246	858	810
V/C Ratio(X)	0.78	0.38	0.17	0.42	0.65	0.54	0.78	0.13	0.00	1.01	0.15	0.16
Avail Cap(c_a), veh/h	258	929	756	123	787	629	241	1451	631	246	858	810
HCM Platoon Ratio	1.00	1.00	1.00	1.00	1.00	1.00	1.00	1.00	1.00	1.00	1.00	1.00
Upstream Filter(I)	1.00	1.00	1.00	1.00	1.00	1.00	1.00	1.00	1.00	1.00	1.00	1.00
Uniform Delay (d), s/veh	33.0	26.0	25.0	36.0	30.8	30.4	33.4	13.4	12.7	31.2	10.5	10.5
Incr Delay (d2), s/veh	3.7	0.7	0.3	13.6	3.4	2.7	4.2	0.2	0.0	59.8	0.4	0.4
Initial Q Delay(d3),s/veh	0.0	0.0	0.0	0.0	0.0	0.0	0.0	0.0	0.0	0.0	0.0	0.0
%ile BackOfQ(50%),veh/ln	1.9	1.9	0.7	0.1	2.4	1.6	1.6	0.9	0.0	8.2	1.2	1.2
Unsig. Movement Delay, s/veh												
LnGrp Delay(d),s/veh	36.7	26.7	25.3	49.6	34.2	33.2	37.7	13.6	12.7	91.0	10.9	11.0
LnGrp LOS	D	C	C	D	C	C	D	B	B	F	B	B
Approach Vol, veh/h		280			230			275			513	
Approach Delay, s/veh		30.1			34.0			21.3			49.7	
Approach LOS		C			C			C			D	

Timer - Assigned Phs	1	2	3	4	5	6	7	8
Phs Duration (G+Y+Rc), s	9.2	40.1	10.0	13.2	14.6	34.7	4.9	18.3
Change Period (Y+Rc), s	4.6	5.1	4.6	5.1	4.6	5.1	4.6	5.1
Max Green Setting (Gmax), s	4.6	29.8	10.5	30.5	10.0	29.6	5.0	36.0
Max Q Clear Time (g_c+I1), s	6.1	5.2	6.1	7.0	12.0	4.4	2.1	6.4
Green Ext Time (p_c), s	0.0	2.2	0.0	1.0	0.0	1.6	0.0	0.9

Intersection Summary	
HCM 6th Ctrl Delay	36.7
HCM 6th LOS	D



Movement	EBL	EBT	EBR	WBL	WBT	WBR	NBL	NBT	NBR	SBL	SBT	SBR
Lane Configurations												
Traffic Volume (veh/h)	159	86	79	49	69	196	74	708	70	410	719	211
Future Volume (veh/h)	159	86	79	49	69	196	74	708	70	410	719	211
Initial Q (Qb), veh	0	0	0	0	0	0	0	0	0	0	0	0
Ped-Bike Adj(A_pbT)	1.00		0.96	1.00		0.96	1.00		0.97	1.00		0.97
Parking Bus, Adj	1.00	1.00	1.00	1.00	1.00	1.00	1.00	1.00	1.00	1.00	1.00	1.00
Work Zone On Approach		No			No			No			No	
Adj Sat Flow, veh/h/ln	1870	1870	1870	1870	1870	1870	1870	1870	1870	1870	1870	1870
Adj Flow Rate, veh/h	209	113	104	59	83	236	86	823	81	512	899	264
Peak Hour Factor	0.76	0.76	0.76	0.83	0.83	0.83	0.86	0.86	0.86	0.80	0.80	0.80
Percent Heavy Veh, %	2	2	2	2	2	2	2	2	2	2	2	2
Cap, veh/h	295	310	251	292	307	571	111	806	79	363	1062	311
Arrive On Green	0.17	0.17	0.17	0.16	0.16	0.16	0.06	0.25	0.25	0.20	0.39	0.39
Sat Flow, veh/h	1781	1870	1517	1781	1870	1517	1781	3256	320	1781	2692	789
Grp Volume(v), veh/h	209	113	104	59	83	236	86	449	455	512	593	570
Grp Sat Flow(s),veh/h/ln	1781	1870	1517	1781	1870	1517	1781	1777	1800	1781	1777	1704
Q Serve(g_s), s	13.4	6.5	7.4	3.5	4.7	14.1	5.7	29.9	29.9	24.6	36.6	36.8
Cycle Q Clear(g_c), s	13.4	6.5	7.4	3.5	4.7	14.1	5.7	29.9	29.9	24.6	36.6	36.8
Prop In Lane	1.00		1.00	1.00		1.00	1.00		0.18	1.00		0.46
Lane Grp Cap(c), veh/h	295	310	251	292	307	571	111	440	445	363	701	672
V/C Ratio(X)	0.71	0.36	0.41	0.20	0.27	0.41	0.77	1.02	1.02	1.41	0.85	0.85
Avail Cap(c_a), veh/h	486	511	414	531	557	775	189	440	445	363	701	672
HCM Platoon Ratio	1.00	1.00	1.00	1.00	1.00	1.00	1.00	1.00	1.00	1.00	1.00	1.00
Upstream Filter(I)	1.00	1.00	1.00	1.00	1.00	1.00	1.00	1.00	1.00	1.00	1.00	1.00
Uniform Delay (d), s/veh	47.7	44.8	45.2	43.7	44.2	28.6	55.8	45.5	45.5	48.1	33.3	33.3
Incr Delay (d2), s/veh	4.4	1.0	1.5	0.1	0.2	0.2	4.2	48.5	48.2	201.1	11.3	12.0
Initial Q Delay(d3),s/veh	0.0	0.0	0.0	0.0	0.0	0.0	0.0	0.0	0.0	0.0	0.0	0.0
%ile BackOfQ(50%),veh/ln	6.2	3.1	2.9	1.5	2.2	5.0	2.7	18.7	18.9	30.9	17.3	16.8
Unsig. Movement Delay, s/veh												
LnGrp Delay(d),s/veh	52.1	45.8	46.7	43.8	44.4	28.8	60.0	93.9	93.7	249.2	44.6	45.3
LnGrp LOS	D	D	D	D	D	C	E	F	F	F	D	D
Approach Vol, veh/h		426			378			990			1675	
Approach Delay, s/veh		49.1			34.6			90.9			107.4	
Approach LOS		D			C			F			F	

Timer - Assigned Phs	1	2		4	5	6		8
Phs Duration (G+Y+Rc), s	12.3	54.9		26.2	30.0	37.2		27.4
Change Period (Y+Rc), s	* 4.7	* 7.3		6.4	5.4	7.3		7.4
Max Green Setting (Gmax), s	* 13	* 43		36.0	24.6	29.9		33.0
Max Q Clear Time (g_c+I1), s	7.7	38.8		16.1	26.6	31.9		15.4
Green Ext Time (p_c), s	0.0	3.3		0.7	0.0	0.0		2.2

Intersection Summary		
HCM 6th Ctrl Delay		87.6
HCM 6th LOS		F

Notes

* HCM 6th computational engine requires equal clearance times for the phases crossing the barrier.

Intersection	
Int Delay, s/veh	1.5

Movement	EBL	EBR	NBL	NBT	SBT	SBR
Lane Configurations						
Traffic Vol, veh/h	4	149	167	769	451	12
Future Vol, veh/h	4	149	167	769	451	12
Conflicting Peds, #/hr	10	10	10	0	0	10
Sign Control	Free	Free	Free	Free	Stop	Stop
RT Channelized	-	None	-	None	-	None
Storage Length	0	-	-	-	-	-
Veh in Median Storage, #	2	-	-	0	0	-
Grade, %	0	-	-	0	0	-
Peak Hour Factor	63	63	70	70	75	75
Heavy Vehicles, %	2	2	2	2	2	2
Mvmt Flow	6	237	239	1099	601	16

Major/Minor	Major1		Minor2	
Conflicting Flow All	10	0	1587	20
Stage 1	-	-	10	-
Stage 2	-	-	1577	-
Critical Hdwy	4.14	-	6.54	6.94
Critical Hdwy Stg 1	-	-	-	-
Critical Hdwy Stg 2	-	-	5.54	-
Follow-up Hdwy	2.22	-	4.02	3.32
Pot Cap-1 Maneuver	1608	-	~ 107	1053
Stage 1	-	-	-	-
Stage 2	-	-	~ 168	-
Platoon blocked, %		-		
Mov Cap-1 Maneuver	1593	-	0	1033
Mov Cap-2 Maneuver	-	-	0	-
Stage 1	-	-	0	-
Stage 2	-	-	0	-

Approach	NB	SB
HCM Control Delay, s	2.2	
HCM LOS		-

Minor Lane/Major Mvmt	NBL	NBT	SBLn1	SBLn2
Capacity (veh/h)	1593	-	-	1033
HCM Lane V/C Ratio	0.15	-	-	0.307
HCM Control Delay (s)	7.7	1	-	10
HCM Lane LOS	A	A	-	B
HCM 95th %tile Q(veh)	0.5	-	-	1.3

Notes			
~: Volume exceeds capacity	$: Delay exceeds 300s	+: Computation Not Defined	*: All major volume in platoon



Movement	WBL	WBR	NBT	NBR	SBL	SBT
Lane Configurations						
Traffic Volume (veh/h)	13	132	762	59	126	471
Future Volume (veh/h)	13	132	762	59	126	471
Initial Q (Qb), veh	0	0	0	0	0	0
Ped-Bike Adj(A_pbT)	1.00	1.00		0.96	1.00	
Parking Bus, Adj	1.00	1.00	1.00	1.00	1.00	1.00
Work Zone On Approach	No		No			No
Adj Sat Flow, veh/h/ln	1870	1870	1870	1870	1870	1870
Adj Flow Rate, veh/h	14	145	977	76	147	548
Peak Hour Factor	0.91	0.91	0.78	0.78	0.86	0.86
Percent Heavy Veh, %	2	2	2	2	2	2
Cap, veh/h	207	184	1790	139	185	1314
Arrive On Green	0.12	0.12	0.54	0.54	0.10	0.70
Sat Flow, veh/h	1781	1585	3424	259	1781	1870
Grp Volume(v), veh/h	14	145	521	532	147	548
Grp Sat Flow(s),veh/h/ln	1781	1585	1777	1812	1781	1870
Q Serve(g_s), s	0.5	6.9	14.8	14.8	6.2	9.5
Cycle Q Clear(g_c), s	0.5	6.9	14.8	14.8	6.2	9.5
Prop In Lane	1.00	1.00		0.14	1.00	
Lane Grp Cap(c), veh/h	207	184	955	974	185	1314
V/C Ratio(X)	0.07	0.79	0.55	0.55	0.79	0.42
Avail Cap(c_a), veh/h	641	571	1662	1695	722	2655
HCM Platoon Ratio	1.00	1.00	1.00	1.00	1.00	1.00
Upstream Filter(I)	1.00	1.00	1.00	1.00	1.00	1.00
Uniform Delay (d), s/veh	30.4	33.2	11.7	11.7	33.8	4.8
Incr Delay (d2), s/veh	0.1	7.2	1.8	1.7	2.9	0.8
Initial Q Delay(d3),s/veh	0.0	0.0	0.0	0.0	0.0	0.0
%ile BackOfQ(50%),veh/ln	0.2	0.4	5.3	5.4	2.7	2.6
Unsig. Movement Delay, s/veh						
LnGrp Delay(d),s/veh	30.5	40.4	13.5	13.4	36.7	5.6
LnGrp LOS	C	D	B	B	D	A
Approach Vol, veh/h	159		1053			695
Approach Delay, s/veh	39.5		13.4			12.2
Approach LOS	D		B			B

Timer - Assigned Phs		2		4	5	6
Phs Duration (G+Y+Rc), s		62.0		15.2	12.7	49.3
Change Period (Y+Rc), s		* 7.8		6.2	* 4.7	7.8
Max Green Setting (Gmax), s		* 1.1E2		27.8	* 31	72.2
Max Q Clear Time (g_c+I1), s		11.5		8.9	8.2	16.8
Green Ext Time (p_c), s		11.7		0.4	0.2	24.7

Intersection Summary	
HCM 6th Ctrl Delay	15.2
HCM 6th LOS	B

Notes

* HCM 6th computational engine requires equal clearance times for the phases crossing the barrier.

Intersection	
Int Delay, s/veh	6.5

Movement	EBT	EBR	WBL	WBT	NBL	NBR
Lane Configurations						
Traffic Vol, veh/h	86	57	55	150	85	104
Future Vol, veh/h	86	57	55	150	85	104
Conflicting Peds, #/hr	0	10	10	0	10	10
Sign Control	Free	Free	Free	Free	Stop	Stop
RT Channelized	-	None	-	None	-	None
Storage Length	-	-	-	-	0	-
Veh in Median Storage, #	0	-	-	0	0	-
Grade, %	0	-	-	0	0	-
Peak Hour Factor	91	91	57	57	70	70
Heavy Vehicles, %	2	2	2	2	2	2
Mvmt Flow	95	63	96	263	121	149

Major/Minor	Major1		Major2		Minor1	
Conflicting Flow All	0	0	168	0	602	147
Stage 1	-	-	-	-	137	-
Stage 2	-	-	-	-	465	-
Critical Hdwy	-	-	4.12	-	6.42	6.22
Critical Hdwy Stg 1	-	-	-	-	5.42	-
Critical Hdwy Stg 2	-	-	-	-	5.42	-
Follow-up Hdwy	-	-	2.218	-	3.518	3.318
Pot Cap-1 Maneuver	-	-	1410	-	463	900
Stage 1	-	-	-	-	890	-
Stage 2	-	-	-	-	632	-
Platoon blocked, %	-	-		-		
Mov Cap-1 Maneuver	-	-	1397	-	418	883
Mov Cap-2 Maneuver	-	-	-	-	418	-
Stage 1	-	-	-	-	881	-
Stage 2	-	-	-	-	576	-

Approach	EB	WB	NB
HCM Control Delay, s	0	2.1	16.2
HCM LOS			C

Minor Lane/Major Mvmt	NBLn1	EBT	EBR	WBL	WBT
Capacity (veh/h)	589	-	-	1397	-
HCM Lane V/C Ratio	0.458	-	-	0.069	-
HCM Control Delay (s)	16.2	-	-	7.8	0
HCM Lane LOS	C	-	-	A	A
HCM 95th %tile Q(veh)	2.4	-	-	0.2	-

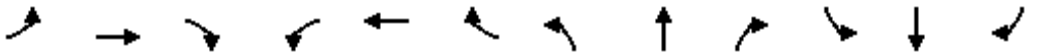

Movement	EBL	EBT	EBR	WBL	WBT	WBR	NBL	NBT	NBR	SBL	SBT	SBR
Lane Configurations												
Traffic Volume (veh/h)	108	52	30	5	54	92	34	680	13	108	402	121
Future Volume (veh/h)	108	52	30	5	54	92	34	680	13	108	402	121
Initial Q (Qb), veh	0	0	0	0	0	0	0	0	0	0	0	0
Ped-Bike Adj(A_pbT)	1.00		0.97	1.00		1.00	1.00		0.97	1.00		0.98
Parking Bus, Adj	1.00	1.00	1.00	1.00	1.00	1.00	1.00	1.00	1.00	1.00	1.00	1.00
Work Zone On Approach		No			No			No			No	
Adj Sat Flow, veh/h/ln	1870	1870	1870	1870	1870	1870	1870	1870	1870	1870	1870	1870
Adj Flow Rate, veh/h	114	55	32	6	68	0	40	800	15	140	522	157
Peak Hour Factor	0.95	0.95	0.95	0.80	0.80	0.80	0.85	0.85	0.85	0.77	0.77	0.77
Percent Heavy Veh, %	2	2	2	2	2	2	2	2	2	2	2	2
Cap, veh/h	149	559	296	14	628		70	1195	518	184	1071	320
Arrive On Green	0.08	0.25	0.25	0.01	0.18	0.00	0.04	0.34	0.34	0.10	0.40	0.40
Sat Flow, veh/h	1781	2218	1172	1781	3554	1585	1781	3554	1542	1781	2678	801
Grp Volume(v), veh/h	114	43	44	6	68	0	40	800	15	140	345	334
Grp Sat Flow(s),veh/h/ln	1781	1777	1613	1781	1777	1585	1781	1777	1542	1781	1777	1702
Q Serve(g_s), s	4.2	1.2	1.4	0.2	1.1	0.0	1.5	12.9	0.4	5.1	9.7	9.8
Cycle Q Clear(g_c), s	4.2	1.2	1.4	0.2	1.1	0.0	1.5	12.9	0.4	5.1	9.7	9.8
Prop In Lane	1.00		0.73	1.00		1.00	1.00		1.00	1.00		0.47
Lane Grp Cap(c), veh/h	149	448	407	14	628		70	1195	518	184	711	681
V/C Ratio(X)	0.77	0.10	0.11	0.43	0.11		0.57	0.67	0.03	0.76	0.49	0.49
Avail Cap(c_a), veh/h	410	1193	1083	197	1961		330	2615	1135	757	1733	1660
HCM Platoon Ratio	1.00	1.00	1.00	1.00	1.00	1.00	1.00	1.00	1.00	1.00	1.00	1.00
Upstream Filter(I)	1.00	1.00	1.00	1.00	1.00	0.00	1.00	1.00	1.00	1.00	1.00	1.00
Uniform Delay (d), s/veh	30.0	19.2	19.2	33.0	23.1	0.0	31.6	19.0	14.9	29.2	14.9	15.0
Incr Delay (d2), s/veh	8.0	0.1	0.1	19.2	0.1	0.0	7.2	0.7	0.0	6.4	0.5	0.5
Initial Q Delay(d3),s/veh	0.0	0.0	0.0	0.0	0.0	0.0	0.0	0.0	0.0	0.0	0.0	0.0
%ile BackOfQ(50%),veh/ln	2.0	0.5	0.5	0.2	0.4	0.0	0.7	4.7	0.1	2.3	3.5	3.3
Unsig. Movement Delay, s/veh												
LnGrp Delay(d),s/veh	38.0	19.2	19.3	52.2	23.2	0.0	38.8	19.7	14.9	35.6	15.5	15.5
LnGrp LOS	D	B	B	D	C		D	B	B	D	B	B
Approach Vol, veh/h		201			74	A		855			819	
Approach Delay, s/veh		29.9			25.5			20.5			18.9	
Approach LOS		C			C			C			B	

Timer - Assigned Phs	1	2	3	4	5	6	7	8
Phs Duration (G+Y+Rc), s	11.5	28.3	5.1	22.0	7.2	32.5	10.2	16.9
Change Period (Y+Rc), s	4.6	5.8	4.6	5.1	4.6	5.8	4.6	5.1
Max Green Setting (Gmax), s	28.4	49.2	7.4	44.9	12.4	65.2	15.4	36.9
Max Q Clear Time (g_c+I1), s	7.1	14.9	2.2	3.4	3.5	11.8	6.2	3.1
Green Ext Time (p_c), s	0.3	6.0	0.0	0.5	0.0	4.5	0.2	0.3

Intersection Summary	
HCM 6th Ctrl Delay	21.0
HCM 6th LOS	C

Notes

Unsignalized Delay for [WBR] is excluded from calculations of the approach delay and intersection delay.

Intersection	
Intersection Delay, s/veh	197.2
Intersection LOS	F

Movement	EBL	EBT	EBR	WBL	WBT	WBR	NBL	NBT	NBR	SBL	SBT	SBR
Lane Configurations												
Traffic Vol, veh/h	139	233	28	50	340	38	52	135	122	77	52	240
Future Vol, veh/h	139	233	28	50	340	38	52	135	122	77	52	240
Peak Hour Factor	0.69	0.69	0.69	0.73	0.73	0.73	0.67	0.67	0.67	0.77	0.77	0.77
Heavy Vehicles, %	2	2	2	2	2	2	2	2	2	2	2	2
Mvmt Flow	201	338	41	68	466	52	78	201	182	100	68	312
Number of Lanes	0	1	1	0	1	0	0	1	0	0	1	1

Approach	EB	WB	NB	SB
Opposing Approach	WB	EB	SB	NB
Opposing Lanes	1	2	2	1
Conflicting Approach Left	SB	NB	EB	WB
Conflicting Lanes Left	2	1	2	1
Conflicting Approach Right	NB	SB	WB	EB
Conflicting Lanes Right	1	2	1	2
HCM Control Delay	230.6	315	168.8	40
HCM LOS	F	F	F	E

Lane	NBLn1	EBLn1	EBLn2	WBLn1	SBLn1	SBLn2
Vol Left, %	17%	37%	0%	12%	60%	0%
Vol Thru, %	44%	63%	0%	79%	40%	0%
Vol Right, %	39%	0%	100%	9%	0%	100%
Sign Control	Stop	Stop	Stop	Stop	Stop	Stop
Traffic Vol by Lane	309	372	28	428	129	240
LT Vol	52	139	0	50	77	0
Through Vol	135	233	0	340	52	0
RT Vol	122	0	28	38	0	240
Lane Flow Rate	461	539	41	586	168	312
Geometry Grp	6	7	7	6	7	7
Degree of Util (X)	1.239	1.443	0.099	1.603	0.467	0.782
Departure Headway (Hd)	12.564	11.794	10.853	11.938	13.082	12.016
Convergence, Y/N	Yes	Yes	Yes	Yes	Yes	Yes
Cap	295	313	332	311	278	305
Service Time	10.564	9.494	8.553	9.938	10.782	9.716
HCM Lane V/C Ratio	1.563	1.722	0.123	1.884	0.604	1.023
HCM Control Delay	168.8	246.8	14.7	315	26.7	47.1
HCM Lane LOS	F	F	B	F	D	E
HCM 95th-tile Q	16.6	23.8	0.3	29	2.3	6.1

Intersection	
Intersection Delay, s/veh	286
Intersection LOS	F

Movement	EBL	EBT	EBR	WBL	WBT	WBR	NBL	NBT	NBR	SBL	SBT	SBR
Lane Configurations												
Traffic Vol, veh/h	56	349	24	0	345	142	23	189	4	158	149	59
Future Vol, veh/h	56	349	24	0	345	142	23	189	4	158	149	59
Peak Hour Factor	0.68	0.68	0.68	0.70	0.70	0.70	0.64	0.64	0.64	0.69	0.69	0.69
Heavy Vehicles, %	2	2	2	2	2	2	2	2	2	2	2	2
Mvmt Flow	82	513	35	0	493	203	36	295	6	229	216	86
Number of Lanes	0	1	0	0	1	0	0	1	0	0	1	0

Approach	EB	WB	NB	SB
Opposing Approach	WB	EB	SB	NB
Opposing Lanes	1	1	1	1
Conflicting Approach Left	SB	NB	EB	WB
Conflicting Lanes Left	1	1	1	1
Conflicting Approach Right	NB	SB	WB	EB
Conflicting Lanes Right	1	1	1	1
HCM Control Delay	333	389.8	79.7	225.1
HCM LOS	F	F	F	F

Lane	NBLn1	EBLn1	WBLn1	SBLn1
Vol Left, %	11%	13%	0%	43%
Vol Thru, %	88%	81%	71%	41%
Vol Right, %	2%	6%	29%	16%
Sign Control	Stop	Stop	Stop	Stop
Traffic Vol by Lane	216	429	487	366
LT Vol	23	56	0	158
Through Vol	189	349	345	149
RT Vol	4	24	142	59
Lane Flow Rate	338	631	696	530
Geometry Grp	1	1	1	1
Degree of Util (X)	0.904	1.638	1.774	1.377
Departure Headway (Hd)	15.647	12.893	12.305	13.215
Convergence, Y/N	Yes	Yes	Yes	Yes
Cap	236	290	306	281
Service Time	13.647	10.893	10.305	11.215
HCM Lane V/C Ratio	1.432	2.176	2.275	1.886
HCM Control Delay	79.7	333	389.8	225.1
HCM Lane LOS	F	F	F	F
HCM 95th-tile Q	7.6	28.3	34	19.9

Intersection	
Intersection Delay, s/veh	312.9
Intersection LOS	F

Movement	EBL	EBT	EBR	WBL	WBT	WBR	NBL	NBT	NBR	SBL	SBT	SBR
Lane Configurations												
Traffic Vol, veh/h	111	324	15	56	394	190	8	195	31	127	174	202
Future Vol, veh/h	111	324	15	56	394	190	8	195	31	127	174	202
Peak Hour Factor	0.61	0.61	0.61	0.70	0.70	0.70	0.87	0.87	0.87	0.76	0.76	0.76
Heavy Vehicles, %	2	2	2	2	2	2	2	2	2	2	2	2
Mvmt Flow	182	531	25	80	563	271	9	224	36	167	229	266
Number of Lanes	1	1	0	0	1	0	1	1	0	1	1	0

Approach	EB	WB	NB	SB
Opposing Approach	WB	EB	SB	NB
Opposing Lanes	1	2	2	2
Conflicting Approach Left	SB	NB	EB	WB
Conflicting Lanes Left	2	2	2	1
Conflicting Approach Right	NB	SB	WB	EB
Conflicting Lanes Right	2	2	1	2
HCM Control Delay	180.9	640	40.3	119.1
HCM LOS	F	F	E	F

Lane	NBLn1	NBLn2	EBLn1	EBLn2	WBLn1	SBLn1	SBLn2
Vol Left, %	100%	0%	100%	0%	9%	100%	0%
Vol Thru, %	0%	86%	0%	96%	62%	0%	46%
Vol Right, %	0%	14%	0%	4%	30%	0%	54%
Sign Control	Stop	Stop	Stop	Stop	Stop	Stop	Stop
Traffic Vol by Lane	8	226	111	339	640	127	376
LT Vol	8	0	111	0	56	127	0
Through Vol	0	195	0	324	394	0	174
RT Vol	0	31	0	15	190	0	202
Lane Flow Rate	9	260	182	556	914	167	495
Geometry Grp	7	7	7	7	6	7	7
Degree of Util (X)	0.026	0.693	0.486	1.403	2.354	0.447	1.202
Departure Headway (Hd)	13.839	13.189	12.669	12.097	10.285	12.495	11.547
Convergence, Y/N	Yes	Yes	Yes	Yes	Yes	Yes	Yes
Cap	260	278	288	306	366	291	322
Service Time	11.539	10.889	10.369	9.797	8.285	10.195	9.247
HCM Lane V/C Ratio	0.035	0.935	0.632	1.817	2.497	0.574	1.537
HCM Control Delay	16.9	41.1	26.8	231.4	640	24.9	150.9
HCM Lane LOS	C	E	D	F	F	C	F
HCM 95th-tile Q	0.1	4.7	2.5	22.1	64.1	2.2	16.4



Movement	EBL	EBT	EBR	WBL	WBT	WBR	NBL	NBT	NBR	SBL	SBT	SBR
Lane Configurations												
Traffic Volume (veh/h)	72	272	129	4	373	228	155	357	1	151	257	113
Future Volume (veh/h)	72	272	129	4	373	228	155	357	1	151	257	113
Initial Q (Qb), veh	0	0	0	0	0	0	0	0	0	0	0	0
Ped-Bike Adj(A_pbT)	1.00		0.96	1.00		0.96	1.00		0.95	1.00		0.95
Parking Bus, Adj	1.00	1.00	1.00	1.00	1.00	1.00	1.00	1.00	1.00	1.00	1.00	1.00
Work Zone On Approach		No			No			No			No	
Adj Sat Flow, veh/h/ln	1870	1870	1870	1870	1870	1870	1870	1870	1870	1870	1870	1870
Adj Flow Rate, veh/h	106	400	190	6	557	340	225	517	1	164	279	123
Peak Hour Factor	0.68	0.68	0.68	0.67	0.67	0.67	0.69	0.69	0.69	0.92	0.92	0.92
Percent Heavy Veh, %	2	2	2	2	2	2	2	2	2	2	2	2
Cap, veh/h	64	190	85	26	536	325	111	545	1	146	378	167
Arrive On Green	0.49	0.49	0.49	0.49	0.49	0.49	0.06	0.29	0.29	0.08	0.31	0.31
Sat Flow, veh/h	74	387	173	4	1092	662	1781	1866	4	1781	1210	533
Grp Volume(v), veh/h	696	0	0	903	0	0	225	0	518	164	0	402
Grp Sat Flow(s),veh/h/ln	634	0	0	1758	0	0	1781	0	1869	1781	0	1743
Q Serve(g_s), s	0.0	0.0	0.0	0.0	0.0	0.0	9.3	0.0	40.6	12.3	0.0	30.8
Cycle Q Clear(g_c), s	73.5	0.0	0.0	73.5	0.0	0.0	9.3	0.0	40.6	12.3	0.0	30.8
Prop In Lane	0.15		0.27	0.01		0.38	1.00		0.00	1.00		0.31
Lane Grp Cap(c), veh/h	339	0	0	888	0	0	111	0	547	146	0	545
V/C Ratio(X)	2.05	0.00	0.00	1.02	0.00	0.00	2.03	0.00	0.95	1.12	0.00	0.74
Avail Cap(c_a), veh/h	339	0	0	888	0	0	111	0	556	146	0	549
HCM Platoon Ratio	1.00	1.00	1.00	1.00	1.00	1.00	1.00	1.00	1.00	1.00	1.00	1.00
Upstream Filter(I)	1.00	0.00	0.00	1.00	0.00	0.00	1.00	0.00	1.00	1.00	0.00	1.00
Uniform Delay (d), s/veh	36.0	0.0	0.0	39.5	0.0	0.0	70.2	0.0	51.8	68.7	0.0	46.0
Incr Delay (d2), s/veh	483.6	0.0	0.0	34.5	0.0	0.0	494.7	0.0	27.5	110.3	0.0	8.7
Initial Q Delay(d3),s/veh	0.0	0.0	0.0	0.0	0.0	0.0	0.0	0.0	0.0	0.0	0.0	0.0
%ile BackOfQ(50%),veh/ln	58.7	0.0	0.0	41.4	0.0	0.0	19.4	0.0	22.8	10.0	0.0	14.5
Unsig. Movement Delay, s/veh												
LnGrp Delay(d),s/veh	519.6	0.0	0.0	74.1	0.0	0.0	564.9	0.0	79.4	178.9	0.0	54.7
LnGrp LOS	F	A	A	F	A	A	F	A	E	F	A	D
Approach Vol, veh/h		696			903			743			566	
Approach Delay, s/veh		519.6			74.1			226.4			90.7	
Approach LOS		F			E			F			F	

Timer - Assigned Phs	1	2		4	5	6		8
Phs Duration (G+Y+Rc), s	14.0	54.6		81.0	17.0	51.6		81.0
Change Period (Y+Rc), s	* 4.7	7.9		7.5	* 4.7	* 7.9		7.5
Max Green Setting (Gmax), s	* 9.3	47.1		73.5	* 12	* 45		73.5
Max Q Clear Time (g_c+I1), s	11.3	32.8		75.5	14.3	42.6		75.5
Green Ext Time (p_c), s	0.0	5.2		0.0	0.0	1.2		0.0

Intersection Summary		
HCM 6th Ctrl Delay	222.9	
HCM 6th LOS	F	

Notes

* HCM 6th computational engine requires equal clearance times for the phases crossing the barrier.

Intersection	
Int Delay, s/veh	889.3

Movement	EBL	EBT	EBR	WBL	WBT	WBR	NBL	NBT	NBR	SBL	SBT	SBR
Lane Configurations		↕			↕			↕			↕	
Traffic Vol, veh/h	16	205	202	127	289	40	271	114	171	37	85	39
Future Vol, veh/h	16	205	202	127	289	40	271	114	171	37	85	39
Conflicting Peds, #/hr	10	0	10	10	0	10	10	0	10	10	0	10
Sign Control	Free	Free	Free	Free	Free	Free	Stop	Stop	Stop	Stop	Stop	Stop
RT Channelized	-	-	None	-	-	None	-	-	None	-	-	None
Storage Length	-	-	-	-	-	-	-	-	-	-	-	-
Veh in Median Storage, #	-	0	-	-	0	-	-	0	-	-	0	-
Grade, %	-	0	-	-	0	-	-	0	-	-	0	-
Peak Hour Factor	75	75	92	92	77	77	92	92	92	57	92	57
Heavy Vehicles, %	2	2	2	2	2	2	2	2	2	2	2	2
Mvmt Flow	21	273	220	138	375	52	295	124	186	65	92	68

Major/Minor	Major1			Major2			Minor1			Minor2		
Conflicting Flow All	437	0	0	503	0	0	1202	1148	403	1277	1232	421
Stage 1	-	-	-	-	-	-	435	435	-	687	687	-
Stage 2	-	-	-	-	-	-	767	713	-	590	545	-
Critical Hdwy	4.12	-	-	4.12	-	-	7.12	6.52	6.22	7.12	6.52	6.22
Critical Hdwy Stg 1	-	-	-	-	-	-	6.12	5.52	-	6.12	5.52	-
Critical Hdwy Stg 2	-	-	-	-	-	-	6.12	5.52	-	6.12	5.52	-
Follow-up Hdwy	2.218	-	-	2.218	-	-	3.518	4.018	3.318	3.518	4.018	3.318
Pot Cap-1 Maneuver	1123	-	-	1061	-	-	~ 161	199	647	143	177	632
Stage 1	-	-	-	-	-	-	600	580	-	437	447	-
Stage 2	-	-	-	-	-	-	395	435	-	494	519	-
Platoon blocked, %		-	-		-	-						
Mov Cap-1 Maneuver	1112	-	-	1051	-	-	~ 57	157	635	~ 30	140	620
Mov Cap-2 Maneuver	-	-	-	-	-	-	~ 57	157	-	~ 30	140	-
Stage 1	-	-	-	-	-	-	578	559	-	421	366	-
Stage 2	-	-	-	-	-	-	~ 215	356	-	262	500	-

Approach	EB	WB	NB	SB
HCM Control Delay, s	0.3	2.2	$ 2439.2	$ 986.9
HCM LOS			F	F

Minor Lane/Major Mvmt	NBLn1	EBL	EBT	EBR	WBL	WBT	WBR	SBLn1
Capacity (veh/h)	97	1112	-	-	1051	-	-	77
HCM Lane V/C Ratio	6.23	0.019	-	-	0.131	-	-	2.931
HCM Control Delay (s)	$ 2439.2	8.3	0	-	8.9	0	-	$ 986.9
HCM Lane LOS	F	A	A	-	A	A	-	F
HCM 95th %tile Q(veh)	66.8	0.1	-	-	0.5	-	-	22.4

Notes			
~: Volume exceeds capacity	$: Delay exceeds 300s	+: Computation Not Defined	*: All major volume in platoon

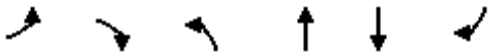

Movement	EBL	EBR	NBL	NBT	SBT	SBR
Lane Configurations						
Traffic Volume (veh/h)	236	180	270	767	379	183
Future Volume (veh/h)	236	180	270	767	379	183
Initial Q (Qb), veh	0	0	0	0	0	0
Ped-Bike Adj(A_pbT)	1.00	1.00	1.00			0.96
Parking Bus, Adj	1.00	1.00	1.00	1.00	1.00	1.00
Work Zone On Approach	No			No	No	
Adj Sat Flow, veh/h/ln	1870	1870	1870	1870	1870	1870
Adj Flow Rate, veh/h	288	220	329	935	468	226
Peak Hour Factor	0.82	0.82	0.82	0.82	0.81	0.81
Percent Heavy Veh, %	2	2	2	2	2	2
Cap, veh/h	330	628	375	1303	520	251
Arrive On Green	0.19	0.19	0.21	0.70	0.44	0.44
Sat Flow, veh/h	1781	1585	1781	1870	1174	567
Grp Volume(v), veh/h	288	220	329	935	0	694
Grp Sat Flow(s),veh/h/ln	1781	1585	1781	1870	0	1741
Q Serve(g_s), s	14.7	9.1	16.7	28.3	0.0	34.4
Cycle Q Clear(g_c), s	14.7	9.1	16.7	28.3	0.0	34.4
Prop In Lane	1.00	1.00	1.00			0.33
Lane Grp Cap(c), veh/h	330	628	375	1303	0	772
V/C Ratio(X)	0.87	0.35	0.88	0.72	0.00	0.90
Avail Cap(c_a), veh/h	382	674	1070	2386	0	1101
HCM Platoon Ratio	1.00	1.00	1.00	1.00	1.00	1.00
Upstream Filter(I)	1.00	1.00	1.00	1.00	0.00	1.00
Uniform Delay (d), s/veh	36.9	19.8	35.6	8.6	0.0	24.0
Incr Delay (d2), s/veh	17.6	0.3	6.6	0.8	0.0	7.5
Initial Q Delay(d3),s/veh	0.0	0.0	0.0	0.0	0.0	0.0
%ile BackOfQ(50%),veh/ln	7.9	9.2	7.6	8.7	0.0	14.4
Unsig. Movement Delay, s/veh						
LnGrp Delay(d),s/veh	54.5	20.1	42.2	9.3	0.0	31.6
LnGrp LOS	D	C	D	A	A	C
Approach Vol, veh/h	508			1264	694	
Approach Delay, s/veh	39.6			17.9	31.6	
Approach LOS	D			B	C	

Timer - Assigned Phs		2		4	5	6
Phs Duration (G+Y+Rc), s		71.0		22.3	23.7	47.3
Change Period (Y+Rc), s		6.0		5.0	4.0	6.0
Max Green Setting (Gmax), s		119.0		20.0	56.0	59.0
Max Q Clear Time (g_c+I1), s		30.3		16.7	18.7	36.4
Green Ext Time (p_c), s		9.0		0.6	1.0	4.9

Intersection Summary		
HCM 6th Ctrl Delay		26.2
HCM 6th LOS		C



Movement	WBL	WBR	NBT	NBR	SBL	SBT
Lane Configurations						
Traffic Volume (veh/h)	176	36	779	225	7	387
Future Volume (veh/h)	176	36	779	225	7	387
Initial Q (Qb), veh	0	0	0	0	0	0
Ped-Bike Adj(A_pbT)	1.00	1.00		0.97	1.00	
Parking Bus, Adj	1.00	1.00	1.00	1.00	1.00	1.00
Work Zone On Approach	No		No			No
Adj Sat Flow, veh/h/ln	1870	1870	1870	1870	1870	1870
Adj Flow Rate, veh/h	263	54	962	266	9	472
Peak Hour Factor	0.67	0.67	0.81	0.81	0.82	0.82
Percent Heavy Veh, %	2	2	2	2	2	2
Cap, veh/h	296	280	989	274	19	1401
Arrive On Green	0.17	0.17	0.71	0.71	0.01	0.75
Sat Flow, veh/h	1781	1585	1399	387	1781	1870
Grp Volume(v), veh/h	263	54	0	1228	9	472
Grp Sat Flow(s),veh/h/ln	1781	1585	0	1786	1781	1870
Q Serve(g_s), s	18.7	3.8	0.0	83.3	0.6	10.9
Cycle Q Clear(g_c), s	18.7	3.8	0.0	83.3	0.6	10.9
Prop In Lane	1.00	1.00		0.22	1.00	
Lane Grp Cap(c), veh/h	296	280	0	1263	19	1401
V/C Ratio(X)	0.89	0.19	0.00	0.97	0.47	0.34
Avail Cap(c_a), veh/h	455	422	0	1300	110	1535
HCM Platoon Ratio	1.00	1.00	1.00	1.00	1.00	1.00
Upstream Filter(I)	1.00	1.00	0.00	1.00	1.00	1.00
Uniform Delay (d), s/veh	52.7	45.3	0.0	17.7	63.5	5.4
Incr Delay (d2), s/veh	13.1	0.3	0.0	18.5	17.1	0.1
Initial Q Delay(d3),s/veh	0.0	0.0	0.0	0.0	0.0	0.0
%ile BackOfQ(50%),veh/ln	9.4	1.5	0.0	34.7	0.4	3.6
Unsig. Movement Delay, s/veh						
LnGrp Delay(d),s/veh	65.8	45.7	0.0	36.2	80.6	5.6
LnGrp LOS	E	D	A	D	F	A
Approach Vol, veh/h	317		1228			481
Approach Delay, s/veh	62.4		36.2			7.0
Approach LOS	E		D			A

Timer - Assigned Phs	1	2			6	8
Phs Duration (G+Y+Rc), s	5.4	97.3			102.7	26.4
Change Period (Y+Rc), s	4.0	6.0			6.0	5.0
Max Green Setting (Gmax), s	8.3	94.0			106.0	33.0
Max Q Clear Time (g_c+I1), s	2.6	85.3			12.9	20.7
Green Ext Time (p_c), s	0.0	6.1			3.1	0.8

Intersection Summary		
HCM 6th Ctrl Delay	33.4	
HCM 6th LOS	C	



Movement	EBL	EBT	EBR	WBL	WBT	WBR	NBL	NBT	NBR	SBL	SBT	SBR
Lane Configurations												
Traffic Volume (veh/h)	30	171	31	24	162	136	25	24	46	17	4	24
Future Volume (veh/h)	30	171	31	24	162	136	25	24	46	17	4	24
Initial Q (Qb), veh	0	0	0	0	0	0	0	0	0	0	0	0
Ped-Bike Adj(A_pbT)	1.00		0.95	1.00		0.93	0.99		0.97	0.99		0.96
Parking Bus, Adj	1.00	1.00	1.00	1.00	1.00	1.00	1.00	1.00	1.00	1.00	1.00	1.00
Work Zone On Approach		No			No			No			No	
Adj Sat Flow, veh/h/ln	1870	1870	1870	1870	1870	1870	1870	1870	1870	1870	1870	1870
Adj Flow Rate, veh/h	56	317	57	30	200	168	34	33	63	25	6	35
Peak Hour Factor	0.54	0.54	0.54	0.81	0.81	0.81	0.73	0.73	0.73	0.69	0.69	0.69
Percent Heavy Veh, %	2	2	2	2	2	2	2	2	2	2	2	2
Cap, veh/h	63	357	64	39	261	237	178	178	290	574	87	506
Arrive On Green	0.27	0.27	0.27	0.16	0.16	0.16	0.38	0.38	0.38	0.38	0.38	0.38
Sat Flow, veh/h	234	1327	239	242	1616	1470	343	470	764	1291	228	1332
Grp Volume(v), veh/h	430	0	0	230	0	168	130	0	0	25	0	41
Grp Sat Flow(s),veh/h/ln	1800	0	0	1858	0	1470	1577	0	0	1291	0	1561
Q Serve(g_s), s	21.7	0.0	0.0	11.2	0.0	10.3	0.0	0.0	0.0	0.0	0.0	1.6
Cycle Q Clear(g_c), s	21.7	0.0	0.0	11.2	0.0	10.3	4.9	0.0	0.0	1.0	0.0	1.6
Prop In Lane	0.13		0.13	0.13		1.00	0.26		0.48	1.00		0.85
Lane Grp Cap(c), veh/h	485	0	0	300	0	237	646	0	0	574	0	592
V/C Ratio(X)	0.89	0.00	0.00	0.77	0.00	0.71	0.20	0.00	0.00	0.04	0.00	0.07
Avail Cap(c_a), veh/h	892	0	0	960	0	760	646	0	0	574	0	592
HCM Platoon Ratio	1.00	1.00	1.00	1.00	1.00	1.00	1.00	1.00	1.00	1.00	1.00	1.00
Upstream Filter(I)	1.00	0.00	0.00	1.00	0.00	1.00	1.00	0.00	0.00	1.00	0.00	1.00
Uniform Delay (d), s/veh	33.3	0.0	0.0	38.1	0.0	37.7	19.8	0.0	0.0	18.6	0.0	18.7
Incr Delay (d2), s/veh	2.2	0.0	0.0	1.6	0.0	1.5	0.7	0.0	0.0	0.1	0.0	0.2
Initial Q Delay(d3),s/veh	0.0	0.0	0.0	0.0	0.0	0.0	0.0	0.0	0.0	0.0	0.0	0.0
%ile BackOfQ(50%),veh/ln	9.5	0.0	0.0	5.0	0.0	3.7	2.0	0.0	0.0	0.4	0.0	0.6
Unsig. Movement Delay, s/veh												
LnGrp Delay(d),s/veh	35.5	0.0	0.0	39.6	0.0	39.1	20.5	0.0	0.0	18.7	0.0	19.0
LnGrp LOS	D	A	A	D	A	D	C	A	A	B	A	B
Approach Vol, veh/h		430			398			130			66	
Approach Delay, s/veh		35.5			39.4			20.5			18.9	
Approach LOS		D			D			C			B	

Timer - Assigned Phs	2	4	6	8
Phs Duration (G+Y+Rc), s	42.0	31.5	42.0	21.3
Change Period (Y+Rc), s	6.0	6.0	6.0	6.0
Max Green Setting (Gmax), s	36.0	47.0	36.0	49.0
Max Q Clear Time (g_c+I1), s	6.9	23.7	3.6	13.2
Green Ext Time (p_c), s	0.2	1.8	0.6	1.1

Intersection Summary	
HCM 6th Ctrl Delay	34.0
HCM 6th LOS	C



Movement	EBL	EBT	EBR	WBL	WBT	WBR	NBL	NBT	NBR	SBL	SBT	SBR
Lane Configurations												
Traffic Volume (veh/h)	129	47	64	1	70	31	162	1369	22	23	1104	92
Future Volume (veh/h)	129	47	64	1	70	31	162	1369	22	23	1104	92
Initial Q (Qb), veh	0	0	0	0	0	0	0	0	0	0	0	0
Ped-Bike Adj(A_pbT)	1.00		0.95	1.00		0.96	1.00		0.96	1.00		0.98
Parking Bus, Adj	1.00	1.00	1.00	1.00	1.00	1.00	1.00	1.00	1.00	1.00	1.00	1.00
Work Zone On Approach		No			No			No			No	
Adj Sat Flow, veh/h/ln	1870	1870	1870	1870	1870	1870	1870	1870	1870	1870	1870	1870
Adj Flow Rate, veh/h	165	60	82	1	90	40	202	1626	28	30	1453	121
Peak Hour Factor	0.78	0.78	0.78	0.78	0.78	0.78	0.80	0.80	0.80	0.76	0.76	0.76
Percent Heavy Veh, %	2	2	2	2	2	2	2	2	2	2	2	2
Cap, veh/h	143	457	868	5	311	253	278	1720	30	92	1610	829
Arrive On Green	0.08	0.24	0.24	0.00	0.17	0.17	0.08	0.48	0.48	0.05	0.45	0.45
Sat Flow, veh/h	1781	1870	2636	1781	1870	1518	3456	3572	61	1781	3554	1548
Grp Volume(v), veh/h	165	60	82	1	90	40	202	807	847	30	1453	121
Grp Sat Flow(s),veh/h/ln	1781	1870	1318	1781	1870	1518	1728	1777	1856	1781	1777	1548
Q Serve(g_s), s	10.0	3.1	2.7	0.1	5.2	2.8	7.1	53.7	54.0	2.0	47.0	4.9
Cycle Q Clear(g_c), s	10.0	3.1	2.7	0.1	5.2	2.8	7.1	53.7	54.0	2.0	47.0	4.9
Prop In Lane	1.00		1.00	1.00		1.00	1.00		0.03	1.00		1.00
Lane Grp Cap(c), veh/h	143	457	868	5	311	253	278	856	894	92	1610	829
V/C Ratio(X)	1.15	0.13	0.09	0.21	0.29	0.16	0.73	0.94	0.95	0.32	0.90	0.15
Avail Cap(c_a), veh/h	143	692	1200	143	692	562	278	856	894	143	1621	834
HCM Platoon Ratio	1.00	1.00	1.00	1.00	1.00	1.00	1.00	1.00	1.00	1.00	1.00	1.00
Upstream Filter(I)	1.00	1.00	1.00	1.00	1.00	1.00	1.00	1.00	1.00	1.00	1.00	1.00
Uniform Delay (d), s/veh	57.1	36.7	29.3	61.8	45.4	44.3	55.8	30.6	30.7	56.8	31.4	14.7
Incr Delay (d2), s/veh	121.6	0.3	0.1	7.5	1.1	0.6	8.1	19.8	19.7	0.7	8.6	0.4
Initial Q Delay(d3),s/veh	0.0	0.0	0.0	0.0	0.0	0.0	0.0	0.0	0.0	0.0	0.0	0.0
%ile BackOfQ(50%),veh/ln	9.3	1.4	0.9	0.0	2.5	1.1	3.3	25.3	26.5	0.9	20.2	1.8
Unsig. Movement Delay, s/veh												
LnGrp Delay(d),s/veh	178.7	37.0	29.4	69.4	46.4	45.0	63.9	50.4	50.4	57.6	40.1	15.0
LnGrp LOS	F	D	C	E	D	D	E	D	D	E	D	B
Approach Vol, veh/h		307			131			1856			1604	
Approach Delay, s/veh		111.1			46.2			51.9			38.5	
Approach LOS		F			D			D			D	

Timer - Assigned Phs	1	2	3	4	5	6	7	8
Phs Duration (G+Y+Rc), s	12.2	68.2	6.0	37.8	15.7	64.7	15.7	28.2
Change Period (Y+Rc), s	* 5.7	* 8.4	* 5.7	7.5	* 5.7	* 8.4	* 5.7	7.5
Max Green Setting (Gmax), s	* 10	* 57	* 10	46.0	* 10	* 57	* 10	46.0
Max Q Clear Time (g_c+I1), s	14.0	56.0	2.1	5.1	9.1	49.0	12.0	7.2
Green Ext Time (p_c), s	0.0	0.7	0.0	1.4	0.0	7.3	0.0	1.3

Intersection Summary	
HCM 6th Ctrl Delay	50.9
HCM 6th LOS	D

Notes

* HCM 6th computational engine requires equal clearance times for the phases crossing the barrier.

Intersection	
Int Delay, s/veh	4.4

Movement	WBL	WBR	NBT	NBR	SBL	SBT
Lane Configurations						
Traffic Vol, veh/h	29	157	357	21	117	275
Future Vol, veh/h	29	157	357	21	117	275
Conflicting Peds, #/hr	10	10	0	10	10	0
Sign Control	Stop	Stop	Free	Free	Free	Free
RT Channelized	-	None	-	None	-	None
Storage Length	0	-	-	-	-	-
Veh in Median Storage, #	0	-	0	-	-	0
Grade, %	0	-	0	-	-	0
Peak Hour Factor	92	92	92	92	92	92
Heavy Vehicles, %	2	2	2	2	2	2
Mvmt Flow	32	171	388	23	127	299

Major/Minor	Minor1		Major1		Major2	
Conflicting Flow All	973	420	0	0	421	0
Stage 1	410	-	-	-	-	-
Stage 2	563	-	-	-	-	-
Critical Hdwy	6.42	6.22	-	-	4.12	-
Critical Hdwy Stg 1	5.42	-	-	-	-	-
Critical Hdwy Stg 2	5.42	-	-	-	-	-
Follow-up Hdwy	3.518	3.318	-	-	2.218	-
Pot Cap-1 Maneuver	280	633	-	-	1138	-
Stage 1	670	-	-	-	-	-
Stage 2	570	-	-	-	-	-
Platoon blocked, %			-	-		-
Mov Cap-1 Maneuver	237	621	-	-	1127	-
Mov Cap-2 Maneuver	237	-	-	-	-	-
Stage 1	663	-	-	-	-	-
Stage 2	488	-	-	-	-	-

Approach	WB	NB	SB
HCM Control Delay, s	17.2	0	2.6
HCM LOS	C		

Minor Lane/Major Mvmt	NBT	NBR	WBLn1	SBL	SBT
Capacity (veh/h)	-	-	496	1127	-
HCM Lane V/C Ratio	-	-	0.408	0.113	-
HCM Control Delay (s)	-	-	17.2	8.6	0
HCM Lane LOS	-	-	C	A	A
HCM 95th %tile Q(veh)	-	-	2	0.4	-

Intersection	
Int Delay, s/veh	18.6

Movement	EBL	EBR	NBL	NBT	SBT	SBR
Lane Configurations						
Traffic Vol, veh/h	86	57	42	953	495	64
Future Vol, veh/h	86	57	42	953	495	64
Conflicting Peds, #/hr	10	10	10	0	0	10
Sign Control	Stop	Stop	Free	Free	Free	Free
RT Channelized	-	None	-	None	-	None
Storage Length	0	-	-	-	-	-
Veh in Median Storage, #	0	-	-	0	0	-
Grade, %	0	-	-	0	0	-
Peak Hour Factor	92	92	92	92	92	92
Heavy Vehicles, %	2	2	2	2	2	2
Mvmt Flow	93	62	46	1036	538	70

Major/Minor	Minor2		Major1		Major2	
Conflicting Flow All	1721	593	618	0	-	0
Stage 1	583	-	-	-	-	-
Stage 2	1138	-	-	-	-	-
Critical Hdwy	6.42	6.22	4.12	-	-	-
Critical Hdwy Stg 1	5.42	-	-	-	-	-
Critical Hdwy Stg 2	5.42	-	-	-	-	-
Follow-up Hdwy	3.518	3.318	2.218	-	-	-
Pot Cap-1 Maneuver	98	506	962	-	-	-
Stage 1	558	-	-	-	-	-
Stage 2	306	-	-	-	-	-
Platoon blocked, %				-	-	-
Mov Cap-1 Maneuver	~ 85	496	953	-	-	-
Mov Cap-2 Maneuver	~ 85	-	-	-	-	-
Stage 1	489	-	-	-	-	-
Stage 2	303	-	-	-	-	-

Approach	EB	NB	SB
HCM Control Delay, s	218.4	0.4	0
HCM LOS	F		

Minor Lane/Major Mvmt	NBL	NBT	EBLn1	SBT	SBR
Capacity (veh/h)	953	-	127	-	-
HCM Lane V/C Ratio	0.048	-	1.224	-	-
HCM Control Delay (s)	9	0	218.4	-	-
HCM Lane LOS	A	A	F	-	-
HCM 95th %tile Q(veh)	0.2	-	9.6	-	-

Notes			
~: Volume exceeds capacity	$: Delay exceeds 300s	+: Computation Not Defined	*: All major volume in platoon

Intersection	
Int Delay, s/veh	4.8

Movement	WBL	WBR	NBT	NBR	SBL	SBT
Lane Configurations						
Traffic Vol, veh/h	43	143	235	32	106	198
Future Vol, veh/h	43	143	235	32	106	198
Conflicting Peds, #/hr	10	10	0	10	10	0
Sign Control	Stop	Stop	Free	Free	Free	Free
RT Channelized	-	None	-	None	-	None
Storage Length	0	-	-	-	-	-
Veh in Median Storage, #	0	-	0	-	-	0
Grade, %	0	-	0	-	-	0
Peak Hour Factor	92	92	92	92	92	92
Heavy Vehicles, %	2	2	2	2	2	2
Mvmt Flow	47	155	255	35	115	215

Major/Minor	Minor1		Major1		Major2	
Conflicting Flow All	738	293	0	0	300	0
Stage 1	283	-	-	-	-	-
Stage 2	455	-	-	-	-	-
Critical Hdwy	6.42	6.22	-	-	4.12	-
Critical Hdwy Stg 1	5.42	-	-	-	-	-
Critical Hdwy Stg 2	5.42	-	-	-	-	-
Follow-up Hdwy	3.518	3.318	-	-	2.218	-
Pot Cap-1 Maneuver	385	746	-	-	1261	-
Stage 1	765	-	-	-	-	-
Stage 2	639	-	-	-	-	-
Platoon blocked, %			-	-		-
Mov Cap-1 Maneuver	338	732	-	-	1249	-
Mov Cap-2 Maneuver	338	-	-	-	-	-
Stage 1	757	-	-	-	-	-
Stage 2	566	-	-	-	-	-

Approach	WB	NB	SB
HCM Control Delay, s	14.6	0	2.9
HCM LOS	B		

Minor Lane/Major Mvmt	NBT	NBR	WBLn1	SBL	SBT
Capacity (veh/h)	-	-	577	1249	-
HCM Lane V/C Ratio	-	-	0.35	0.092	-
HCM Control Delay (s)	-	-	14.6	8.2	0
HCM Lane LOS	-	-	B	A	A
HCM 95th %tile Q(veh)	-	-	1.6	0.3	-

Intersection	
Int Delay, s/veh	10.5

Movement	EBL	EBR	NBL	NBT	SBT	SBR
Lane Configurations						
Traffic Vol, veh/h	71	57	42	923	499	53
Future Vol, veh/h	71	57	42	923	499	53
Conflicting Peds, #/hr	10	10	10	0	0	10
Sign Control	Stop	Stop	Free	Free	Free	Free
RT Channelized	-	None	-	None	-	None
Storage Length	0	-	-	-	-	-
Veh in Median Storage, #	0	-	-	0	0	-
Grade, %	0	-	-	0	0	-
Peak Hour Factor	92	92	92	92	92	92
Heavy Vehicles, %	2	2	2	2	2	2
Mvmt Flow	77	62	46	1003	542	58

Major/Minor	Minor2		Major1		Major2	
Conflicting Flow All	1686	591	610	0	-	0
Stage 1	581	-	-	-	-	-
Stage 2	1105	-	-	-	-	-
Critical Hdwy	6.42	6.22	4.12	-	-	-
Critical Hdwy Stg 1	5.42	-	-	-	-	-
Critical Hdwy Stg 2	5.42	-	-	-	-	-
Follow-up Hdwy	3.518	3.318	2.218	-	-	-
Pot Cap-1 Maneuver	103	507	969	-	-	-
Stage 1	559	-	-	-	-	-
Stage 2	317	-	-	-	-	-
Platoon blocked, %				-	-	-
Mov Cap-1 Maneuver	90	497	960	-	-	-
Mov Cap-2 Maneuver	90	-	-	-	-	-
Stage 1	494	-	-	-	-	-
Stage 2	314	-	-	-	-	-

Approach	EB	NB	SB
HCM Control Delay, s	131.6	0.4	0
HCM LOS	F		

Minor Lane/Major Mvmt	NBL	NBT	EBLn1	SBT	SBR
Capacity (veh/h)	960	-	142	-	-
HCM Lane V/C Ratio	0.048	-	0.98	-	-
HCM Control Delay (s)	8.9	0	131.6	-	-
HCM Lane LOS	A	A	F	-	-
HCM 95th %tile Q(veh)	0.1	-	7	-	-

Intersection	
Int Delay, s/veh	54.4

Movement	EBL	EBR	NBL	NBT	SBT	SBR
Lane Configurations						
Traffic Vol, veh/h	95	159	97	938	513	42
Future Vol, veh/h	95	159	97	938	513	42
Conflicting Peds, #/hr	10	10	10	0	0	10
Sign Control	Stop	Stop	Free	Free	Free	Free
RT Channelized	-	None	-	None	-	None
Storage Length	0	-	410	-	-	80
Veh in Median Storage, #	0	-	-	0	0	-
Grade, %	0	-	-	0	0	-
Peak Hour Factor	92	92	92	92	92	92
Heavy Vehicles, %	2	2	2	2	2	2
Mvmt Flow	103	173	105	1020	558	46

Major/Minor	Minor2		Major1		Major2	
Conflicting Flow All	1808	578	614	0	-	0
Stage 1	568	-	-	-	-	-
Stage 2	1240	-	-	-	-	-
Critical Hdwy	6.42	6.22	4.12	-	-	-
Critical Hdwy Stg 1	5.42	-	-	-	-	-
Critical Hdwy Stg 2	5.42	-	-	-	-	-
Follow-up Hdwy	3.518	3.318	2.218	-	-	-
Pot Cap-1 Maneuver	~ 87	516	965	-	-	-
Stage 1	567	-	-	-	-	-
Stage 2	273	-	-	-	-	-
Platoon blocked, %				-	-	-
Mov Cap-1 Maneuver	~ 76	506	956	-	-	-
Mov Cap-2 Maneuver	~ 76	-	-	-	-	-
Stage 1	500	-	-	-	-	-
Stage 2	270	-	-	-	-	-

Approach	EB	NB	SB
HCM Control Delay, s	$ 391	0.9	0
HCM LOS	F		

Minor Lane/Major Mvmt	NBL	NBT	EBLn1	SBT	SBR
Capacity (veh/h)	956	-	162	-	-
HCM Lane V/C Ratio	0.11	-	1.704	-	-
HCM Control Delay (s)	9.2	-	$ 391	-	-
HCM Lane LOS	A	-	F	-	-
HCM 95th %tile Q(veh)	0.4	-	19.6	-	-

Notes			
~: Volume exceeds capacity	$: Delay exceeds 300s	+: Computation Not Defined	*: All major volume in platoon

Intersection	
Int Delay, s/veh	5.2

Movement	EBL	EBT	WBT	WBR	SBL	SBR
Lane Configurations						
Traffic Vol, veh/h	0	0	0	32	43	0
Future Vol, veh/h	0	0	0	32	43	0
Conflicting Peds, #/hr	10	0	0	10	10	10
Sign Control	Free	Free	Free	Free	Stop	Stop
RT Channelized	-	None	-	None	-	None
Storage Length	-	-	-	-	0	-
Veh in Median Storage, #	-	0	0	-	0	-
Grade, %	-	0	0	-	0	-
Peak Hour Factor	92	92	92	92	92	92
Heavy Vehicles, %	2	2	2	2	2	2
Mvmt Flow	0	0	0	35	47	0

Major/Minor	Major1		Major2		Minor2	
Conflicting Flow All	45	0	-	0	38	38
Stage 1	-	-	-	-	28	-
Stage 2	-	-	-	-	10	-
Critical Hdwy	4.12	-	-	-	6.42	6.22
Critical Hdwy Stg 1	-	-	-	-	5.42	-
Critical Hdwy Stg 2	-	-	-	-	5.42	-
Follow-up Hdwy	2.218	-	-	-	3.518	3.318
Pot Cap-1 Maneuver	1563	-	-	-	974	1034
Stage 1	-	-	-	-	995	-
Stage 2	-	-	-	-	1013	-
Platoon blocked, %		-	-	-		
Mov Cap-1 Maneuver	1548	-	-	-	955	1014
Mov Cap-2 Maneuver	-	-	-	-	955	-
Stage 1	-	-	-	-	985	-
Stage 2	-	-	-	-	1003	-

Approach	EB	WB	SB
HCM Control Delay, s	0	0	9
HCM LOS			A

Minor Lane/Major Mvmt	EBL	EBT	WBT	WBR	SBLn1
Capacity (veh/h)	1548	-	-	-	955
HCM Lane V/C Ratio	-	-	-	-	0.049
HCM Control Delay (s)	0	-	-	-	9
HCM Lane LOS	A	-	-	-	A
HCM 95th %tile Q(veh)	0	-	-	-	0.2

Intersection	
Int Delay, s/veh	3.1

Movement	EBL	EBT	WBT	WBR	SBL	SBR
Lane Configurations						
Traffic Vol, veh/h	0	43	32	42	57	0
Future Vol, veh/h	0	43	32	42	57	0
Conflicting Peds, #/hr	10	0	0	10	10	10
Sign Control	Free	Free	Free	Free	Stop	Stop
RT Channelized	-	None	-	None	-	None
Storage Length	-	-	-	-	0	-
Veh in Median Storage, #	-	0	0	-	0	-
Grade, %	-	0	0	-	0	-
Peak Hour Factor	92	92	92	92	92	92
Heavy Vehicles, %	2	2	2	2	2	2
Mvmt Flow	0	47	35	46	62	0

Major/Minor	Major1		Major2		Minor2	
Conflicting Flow All	91	0	-	0	125	78
Stage 1	-	-	-	-	68	-
Stage 2	-	-	-	-	57	-
Critical Hdwy	4.12	-	-	-	6.42	6.22
Critical Hdwy Stg 1	-	-	-	-	5.42	-
Critical Hdwy Stg 2	-	-	-	-	5.42	-
Follow-up Hdwy	2.218	-	-	-	3.518	3.318
Pot Cap-1 Maneuver	1504	-	-	-	870	983
Stage 1	-	-	-	-	955	-
Stage 2	-	-	-	-	966	-
Platoon blocked, %		-	-	-		
Mov Cap-1 Maneuver	1490	-	-	-	853	964
Mov Cap-2 Maneuver	-	-	-	-	853	-
Stage 1	-	-	-	-	945	-
Stage 2	-	-	-	-	956	-

Approach	EB	WB	SB
HCM Control Delay, s	0	0	9.6
HCM LOS			A

Minor Lane/Major Mvmt	EBL	EBT	WBT	WBR	SBLn1
Capacity (veh/h)	1490	-	-	-	853
HCM Lane V/C Ratio	-	-	-	-	0.073
HCM Control Delay (s)	0	-	-	-	9.6
HCM Lane LOS	A	-	-	-	A
HCM 95th %tile Q(veh)	0	-	-	-	0.2

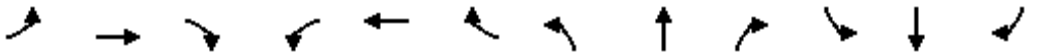

Movement	EBL	EBT	EBR	WBL	WBT	WBR	NBL	NBT	NBR	SBL	SBT	SBR
Lane Configurations												
Traffic Volume (veh/h)	159	143	160	232	105	320	77	478	40	199	354	62
Future Volume (veh/h)	159	143	160	232	105	320	77	478	40	199	354	62
Initial Q (Qb), veh	0	0	0	0	0	0	0	0	0	0	0	0
Ped-Bike Adj(A_pbT)	1.00		0.96	1.00		0.95	1.00		0.97	1.00		0.97
Parking Bus, Adj	1.00	1.00	1.00	1.00	1.00	1.00	1.00	1.00	1.00	1.00	1.00	1.00
Work Zone On Approach		No			No			No			No	
Adj Sat Flow, veh/h/ln	1870	1870	1870	1870	1870	1870	1870	1870	1870	1870	1870	1870
Adj Flow Rate, veh/h	218	196	219	301	136	416	91	562	47	237	421	74
Peak Hour Factor	0.73	0.73	0.73	0.77	0.77	0.77	0.85	0.85	0.85	0.84	0.84	0.84
Percent Heavy Veh, %	2	2	2	2	2	2	2	2	2	2	2	2
Cap, veh/h	245	403	329	329	490	394	172	517	43	256	1059	185
Arrive On Green	0.14	0.22	0.22	0.18	0.26	0.26	0.10	0.30	0.30	0.14	0.35	0.35
Sat Flow, veh/h	1781	1870	1528	1781	1870	1502	1781	1698	142	1781	3011	525
Grp Volume(v), veh/h	218	196	219	301	136	416	91	0	609	237	247	248
Grp Sat Flow(s),veh/h/ln	1781	1870	1528	1781	1870	1502	1781	0	1840	1781	1777	1759
Q Serve(g_s), s	14.2	10.9	15.5	19.6	6.8	31.0	5.8	0.0	36.0	15.5	12.4	12.6
Cycle Q Clear(g_c), s	14.2	10.9	15.5	19.6	6.8	31.0	5.8	0.0	36.0	15.5	12.4	12.6
Prop In Lane	1.00		1.00	1.00		1.00	1.00		0.08	1.00		0.30
Lane Grp Cap(c), veh/h	245	403	329	329	490	394	172	0	560	256	625	619
V/C Ratio(X)	0.89	0.49	0.67	0.92	0.28	1.06	0.53	0.00	1.09	0.93	0.40	0.40
Avail Cap(c_a), veh/h	271	403	329	392	490	394	181	0	560	256	625	619
HCM Platoon Ratio	1.00	1.00	1.00	1.00	1.00	1.00	1.00	1.00	1.00	1.00	1.00	1.00
Upstream Filter(I)	1.00	1.00	1.00	1.00	1.00	1.00	1.00	0.00	1.00	1.00	1.00	1.00
Uniform Delay (d), s/veh	50.1	40.7	42.5	47.3	34.7	43.6	50.9	0.0	41.1	50.0	28.9	28.9
Incr Delay (d2), s/veh	25.1	1.3	5.6	21.8	0.4	61.2	1.0	0.0	64.0	36.3	0.6	0.6
Initial Q Delay(d3),s/veh	0.0	0.0	0.0	0.0	0.0	0.0	0.0	0.0	0.0	0.0	0.0	0.0
%ile BackOfQ(50%),veh/ln	8.0	5.2	6.4	10.6	3.2	18.1	2.6	0.0	25.7	9.4	5.3	5.4
Unsig. Movement Delay, s/veh												
LnGrp Delay(d),s/veh	75.2	42.0	48.2	69.1	35.2	104.8	51.9	0.0	105.1	86.3	29.4	29.5
LnGrp LOS	E	D	D	E	D	F	D	A	F	F	C	C
Approach Vol, veh/h		633			853			700			732	
Approach Delay, s/veh		55.6			81.1			98.2			47.9	
Approach LOS		E			F			F			D	

Timer - Assigned Phs	1	2	3	4	5	6	7	8
Phs Duration (G+Y+Rc), s	21.0	42.0	25.8	29.5	15.4	47.6	20.3	35.0
Change Period (Y+Rc), s	4.0	6.0	4.0	4.0	4.0	6.0	4.0	4.0
Max Green Setting (Gmax), s	17.0	36.0	26.0	23.0	12.0	41.0	18.0	31.0
Max Q Clear Time (g_c+I1), s	17.5	38.0	21.6	17.5	7.8	14.6	16.2	33.0
Green Ext Time (p_c), s	0.0	0.0	0.2	1.3	0.0	4.3	0.1	0.0

Intersection Summary	
HCM 6th Ctrl Delay	71.3
HCM 6th LOS	E

Intersection	
Intersection Delay, s/veh	245.6
Intersection LOS	F

Movement	EBL	EBT	EBR	WBL	WBT	WBR	NBL	NBT	NBR	SBL	SBT	SBR
Lane Configurations												
Traffic Vol, veh/h	13	172	161	35	249	226	187	255	16	334	284	73
Future Vol, veh/h	13	172	161	35	249	226	187	255	16	334	284	73
Peak Hour Factor	0.77	0.77	0.77	0.83	0.83	0.83	0.85	0.85	0.85	0.83	0.83	0.83
Heavy Vehicles, %	2	2	2	2	2	2	2	2	2	2	2	2
Mvmt Flow	17	223	209	42	300	272	220	300	19	402	342	88
Number of Lanes	0	1	1	0	1	1	0	1	0	0	1	0

Approach	EB	WB	NB	SB
Opposing Approach	WB	EB	SB	NB
Opposing Lanes	2	2	1	1
Conflicting Approach Left	SB	NB	EB	WB
Conflicting Lanes Left	1	1	2	2
Conflicting Approach Right	NB	SB	WB	EB
Conflicting Lanes Right	1	1	2	2
HCM Control Delay	32	51.6	213.9	524.7
HCM LOS	D	F	F	F

Lane	NBLn1	EBLn1	EBLn2	WBLn1	WBLn2	SBLn1
Vol Left, %	41%	7%	0%	12%	0%	48%
Vol Thru, %	56%	93%	0%	88%	0%	41%
Vol Right, %	3%	0%	100%	0%	100%	11%
Sign Control	Stop	Stop	Stop	Stop	Stop	Stop
Traffic Vol by Lane	458	185	161	284	226	691
LT Vol	187	13	0	35	0	334
Through Vol	255	172	0	249	0	284
RT Vol	16	0	161	0	226	73
Lane Flow Rate	539	240	209	342	272	833
Geometry Grp	2	7	7	7	7	2
Degree of Util (X)	1.36	0.645	0.518	0.893	0.653	2.095
Departure Headway (Hd)	11.99	12.894	12.103	12.436	11.618	10.187
Convergence, Y/N	Yes	Yes	Yes	Yes	Yes	Yes
Cap	307	284	301	294	313	366
Service Time	9.99	10.594	9.803	10.136	9.318	8.187
HCM Lane V/C Ratio	1.756	0.845	0.694	1.163	0.869	2.276
HCM Control Delay	213.9	36.3	27.1	65.7	33.8	524.7
HCM Lane LOS	F	E	D	F	D	F
HCM 95th-tile Q	20.9	4.1	2.8	8.1	4.3	53.6

Intersection	
Intersection Delay, s/veh	8.1
Intersection LOS	A

Approach	EB	WB	NB	SB
Entry Lanes	1	1	1	1
Conflicting Circle Lanes	1	1	1	1
Adj Approach Flow, veh/h	450	484	100	312
Demand Flow Rate, veh/h	459	494	101	318
Vehicles Circulating, veh/h	315	91	671	505
Vehicles Exiting, veh/h	508	681	103	79
Ped Vol Crossing Leg, #/h	10	10	10	10
Ped Cap Adj	0.999	0.999	0.999	0.999
Approach Delay, s/veh	9.1	6.8	6.9	9.2
Approach LOS	A	A	A	A

Lane	Left	Left	Left	Left
Designated Moves	LTR	LTR	LTR	LTR
Assumed Moves	LTR	LTR	LTR	LTR
RT Channelized				
Lane Util	1.000	1.000	1.000	1.000
Follow-Up Headway, s	2.609	2.609	2.609	2.609
Critical Headway, s	4.976	4.976	4.976	4.976
Entry Flow, veh/h	459	494	101	318
Cap Entry Lane, veh/h	1001	1258	696	824
Entry HV Adj Factor	0.980	0.981	0.986	0.980
Flow Entry, veh/h	450	484	100	312
Cap Entry, veh/h	979	1232	685	807
V/C Ratio	0.459	0.393	0.145	0.386
Control Delay, s/veh	9.1	6.8	6.9	9.2
LOS	A	A	A	A
95th %tile Queue, veh	2	2	1	2

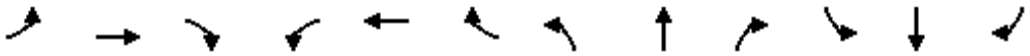

Movement	EBL	EBT	EBR	WBL	WBT	WBR	NBL	NBT	NBR	SBL	SBT	SBR
Lane Configurations												
Traffic Volume (veh/h)	79	136	113	79	166	140	136	749	72	130	915	53
Future Volume (veh/h)	79	136	113	79	166	140	136	749	72	130	915	53
Initial Q (Qb), veh	0	0	0	0	0	0	0	0	0	0	0	0
Ped-Bike Adj(A_pbT)	1.00		0.96	1.00		0.96	1.00		0.96	1.00		0.96
Parking Bus, Adj	1.00	1.00	1.00	1.00	1.00	1.00	1.00	1.00	1.00	1.00	1.00	1.00
Work Zone On Approach		No			No			No			No	
Adj Sat Flow, veh/h/ln	1870	1870	1870	1870	1870	1870	1870	1870	1870	1870	1870	1870
Adj Flow Rate, veh/h	86	148	123	100	210	177	142	780	75	141	995	58
Peak Hour Factor	0.92	0.92	0.92	0.79	0.79	0.79	0.96	0.96	0.96	0.92	0.92	0.92
Percent Heavy Veh, %	2	2	2	2	2	2	2	2	2	2	2	2
Cap, veh/h	109	305	248	124	322	262	169	1578	152	169	1646	96
Arrive On Green	0.06	0.16	0.16	0.07	0.17	0.17	0.10	0.48	0.48	0.09	0.48	0.48
Sat Flow, veh/h	1781	1870	1517	1781	1870	1519	1781	3263	314	1781	3404	198
Grp Volume(v), veh/h	86	148	123	100	210	177	142	425	430	141	519	534
Grp Sat Flow(s),veh/h/ln	1781	1870	1517	1781	1870	1519	1781	1777	1799	1781	1777	1825
Q Serve(g_s), s	5.7	8.6	8.9	6.6	12.6	13.1	9.4	19.5	19.5	9.3	25.6	25.6
Cycle Q Clear(g_c), s	5.7	8.6	8.9	6.6	12.6	13.1	9.4	19.5	19.5	9.3	25.6	25.6
Prop In Lane	1.00		1.00	1.00		1.00	1.00		0.17	1.00		0.11
Lane Grp Cap(c), veh/h	109	305	248	124	322	262	169	860	871	169	859	883
V/C Ratio(X)	0.79	0.48	0.50	0.80	0.65	0.68	0.84	0.49	0.49	0.84	0.60	0.60
Avail Cap(c_a), veh/h	190	500	406	205	516	419	273	860	871	347	859	883
HCM Platoon Ratio	1.00	1.00	1.00	1.00	1.00	1.00	1.00	1.00	1.00	1.00	1.00	1.00
Upstream Filter(I)	1.00	1.00	1.00	0.62	0.62	0.62	0.86	0.86	0.86	1.00	1.00	1.00
Uniform Delay (d), s/veh	55.6	45.6	45.7	55.0	46.3	46.5	53.4	21.0	21.0	53.4	22.6	22.6
Incr Delay (d2), s/veh	4.8	0.4	0.6	2.9	0.5	0.7	5.2	1.7	1.7	4.1	3.1	3.1
Initial Q Delay(d3),s/veh	0.0	0.0	0.0	0.0	0.0	0.0	0.0	0.0	0.0	0.0	0.0	0.0
%ile BackOfQ(50%),veh/ln	2.7	4.0	3.4	3.1	5.8	5.0	4.5	8.4	8.5	4.4	11.3	11.6
Unsig. Movement Delay, s/veh												
LnGrp Delay(d),s/veh	60.4	46.1	46.3	57.9	46.8	47.3	58.6	22.8	22.7	57.5	25.8	25.7
LnGrp LOS	E	D	D	E	D	D	E	C	C	E	C	C
Approach Vol, veh/h		357			487			997			1194	
Approach Delay, s/veh		49.6			49.3			27.9			29.5	
Approach LOS		D			D			C			C	

Timer - Assigned Phs	1	2	3	4	5	6	7	8
Phs Duration (G+Y+Rc), s	17.0	63.8	14.0	25.3	17.0	63.7	12.9	26.4
Change Period (Y+Rc), s	5.6	5.7	5.6	5.7	5.6	5.7	5.6	5.7
Max Green Setting (Gmax), s	23.4	28.1	13.8	32.1	18.4	33.1	12.8	33.1
Max Q Clear Time (g_c+I1), s	11.3	21.5	8.6	10.9	11.4	27.6	7.7	15.1
Green Ext Time (p_c), s	0.1	2.2	0.0	0.7	0.1	2.4	0.0	1.0

Intersection Summary	
HCM 6th Ctrl Delay	34.5
HCM 6th LOS	C



Movement	EBL	EBT	EBR	WBL	WBT	WBR	NBL	NBT	NBR	SBL	SBT	SBR
Lane Configurations												
Traffic Volume (veh/h)	42	211	117	25	190	38	119	483	30	77	693	58
Future Volume (veh/h)	42	211	117	25	190	38	119	483	30	77	693	58
Initial Q (Qb), veh	0	0	0	0	0	0	0	0	0	0	0	0
Ped-Bike Adj(A_pbT)	1.00		0.97	0.99		0.97	1.00		0.96	1.00		0.96
Parking Bus, Adj	1.00	1.00	1.00	1.00	1.00	1.00	1.00	1.00	1.00	1.00	1.00	1.00
Work Zone On Approach		No			No			No			No	
Adj Sat Flow, veh/h/ln	1870	1870	1870	1870	1870	1870	1870	1870	1870	1870	1870	1870
Adj Flow Rate, veh/h	51	257	143	34	257	51	138	562	35	101	912	76
Peak Hour Factor	0.82	0.82	0.82	0.74	0.74	0.74	0.86	0.86	0.86	0.76	0.76	0.76
Percent Heavy Veh, %	2	2	2	2	2	2	2	2	2	2	2	2
Cap, veh/h	153	422	235	76	333	63	175	1305	81	130	1191	99
Arrive On Green	0.09	0.38	0.38	0.24	0.24	0.24	0.10	0.39	0.39	0.07	0.36	0.36
Sat Flow, veh/h	1781	1117	622	101	1363	257	1781	3388	211	1781	3307	276
Grp Volume(v), veh/h	51	0	400	342	0	0	138	294	303	101	490	498
Grp Sat Flow(s),veh/h/ln	1781	0	1739	1721	0	0	1781	1777	1822	1781	1777	1806
Q Serve(g_s), s	2.1	0.0	14.4	7.0	0.0	0.0	5.9	9.5	9.5	4.3	18.9	18.9
Cycle Q Clear(g_c), s	2.1	0.0	14.4	14.4	0.0	0.0	5.9	9.5	9.5	4.3	18.9	18.9
Prop In Lane	1.00		0.36	0.10		0.15	1.00		0.12	1.00		0.15
Lane Grp Cap(c), veh/h	153	0	658	472	0	0	175	684	702	130	640	650
V/C Ratio(X)	0.33	0.00	0.61	0.72	0.00	0.00	0.79	0.43	0.43	0.77	0.77	0.77
Avail Cap(c_a), veh/h	259	0	1086	783	0	0	328	1087	1114	259	1018	1035
HCM Platoon Ratio	1.00	1.00	1.00	1.00	1.00	1.00	1.00	1.00	1.00	1.00	1.00	1.00
Upstream Filter(I)	1.00	0.00	1.00	1.00	0.00	0.00	1.00	1.00	1.00	1.00	1.00	1.00
Uniform Delay (d), s/veh	33.4	0.0	19.5	27.4	0.0	0.0	34.2	17.6	17.6	35.4	22.0	22.0
Incr Delay (d2), s/veh	1.3	0.0	0.9	2.1	0.0	0.0	7.6	0.4	0.4	9.4	2.0	1.9
Initial Q Delay(d3),s/veh	0.0	0.0	0.0	0.0	0.0	0.0	0.0	0.0	0.0	0.0	0.0	0.0
%ile BackOfQ(50%),veh/ln	0.9	0.0	5.5	5.9	0.0	0.0	2.9	3.7	3.8	2.2	7.8	7.9
Unsig. Movement Delay, s/veh												
LnGrp Delay(d),s/veh	34.7	0.0	20.4	29.6	0.0	0.0	41.9	18.0	18.0	44.7	23.9	23.9
LnGrp LOS	C	A	C	C	A	A	D	B	B	D	C	C
Approach Vol, veh/h		451			342			735			1089	
Approach Delay, s/veh		22.0			29.6			22.5			25.8	
Approach LOS		C			C			C			C	

Timer - Assigned Phs	1	2		4	5	6	7	8
Phs Duration (G+Y+Rc), s	9.4	34.4		33.9	11.3	32.5	10.4	23.5
Change Period (Y+Rc), s	3.7	4.5		4.5	3.7	4.5	3.7	4.5
Max Green Setting (Gmax), s	11.3	47.5		48.5	14.3	44.5	11.3	33.5
Max Q Clear Time (g_c+I1), s	6.3	11.5		16.4	7.9	20.9	4.1	16.4
Green Ext Time (p_c), s	0.1	4.1		2.7	0.2	7.0	0.0	1.9

Intersection Summary	
HCM 6th Ctrl Delay	24.7
HCM 6th LOS	C



Movement	EBL	EBT	EBR	WBL	WBT	WBR	NBL	NBT	NBR	SBL	SBT	SBR
Lane Configurations												
Traffic Volume (veh/h)	41	150	103	171	140	195	57	768	115	110	939	34
Future Volume (veh/h)	41	150	103	171	140	195	57	768	115	110	939	34
Initial Q (Qb), veh	0	0	0	0	0	0	0	0	0	0	0	0
Ped-Bike Adj(A_pbT)	1.00		0.96	1.00		0.96	1.00		0.95	1.00		0.96
Parking Bus, Adj	1.00	1.00	1.00	1.00	1.00	1.00	1.00	1.00	1.00	1.00	1.00	1.00
Work Zone On Approach		No			No			No			No	
Adj Sat Flow, veh/h/ln	1870	1870	1870	1870	1870	1870	1870	1870	1870	1870	1870	1870
Adj Flow Rate, veh/h	44	161	111	178	146	203	72	972	146	125	1067	39
Peak Hour Factor	0.93	0.93	0.93	0.96	0.96	0.96	0.79	0.79	0.79	0.88	0.88	0.88
Percent Heavy Veh, %	2	2	2	2	2	2	2	2	2	2	2	2
Cap, veh/h	52	189	130	214	176	328	82	958	144	149	1218	45
Arrive On Green	0.22	0.22	0.22	0.21	0.21	0.21	0.05	0.31	0.31	0.08	0.35	0.35
Sat Flow, veh/h	240	878	605	1000	820	1528	1781	3075	462	1781	3490	128
Grp Volume(v), veh/h	316	0	0	324	0	203	72	561	557	125	543	563
Grp Sat Flow(s),veh/h/ln	1723	0	0	1820	0	1528	1781	1777	1760	1781	1777	1840
Q Serve(g_s), s	23.4	0.0	0.0	22.6	0.0	16.0	5.3	41.4	41.4	9.2	38.1	38.1
Cycle Q Clear(g_c), s	23.4	0.0	0.0	22.6	0.0	16.0	5.3	41.4	41.4	9.2	38.1	38.1
Prop In Lane	0.14		0.35	0.55		1.00	1.00		0.26	1.00		0.07
Lane Grp Cap(c), veh/h	371	0	0	390	0	328	82	554	549	149	620	643
V/C Ratio(X)	0.85	0.00	0.00	0.83	0.00	0.62	0.88	1.01	1.01	0.84	0.88	0.88
Avail Cap(c_a), veh/h	480	0	0	507	0	426	82	554	549	152	623	646
HCM Platoon Ratio	1.00	1.00	1.00	1.00	1.00	1.00	1.00	1.00	1.00	1.00	1.00	1.00
Upstream Filter(I)	1.00	0.00	0.00	1.00	0.00	1.00	1.00	1.00	1.00	1.00	1.00	1.00
Uniform Delay (d), s/veh	50.1	0.0	0.0	49.9	0.0	47.3	63.0	45.7	45.7	60.0	40.5	40.5
Incr Delay (d2), s/veh	11.2	0.0	0.0	8.8	0.0	1.9	59.8	41.7	42.2	30.5	15.2	14.8
Initial Q Delay(d3),s/veh	0.0	0.0	0.0	0.0	0.0	0.0	0.0	0.0	0.0	0.0	0.0	0.0
%ile BackOfQ(50%),veh/ln	11.2	0.0	0.0	11.1	0.0	6.2	3.7	24.1	24.0	5.4	18.8	19.4
Unsig. Movement Delay, s/veh												
LnGrp Delay(d),s/veh	61.3	0.0	0.0	58.6	0.0	49.2	122.8	87.4	87.9	90.5	55.7	55.3
LnGrp LOS	E	A	A	E	A	D	F	F	F	F	E	E
Approach Vol, veh/h		316			527			1190			1231	
Approach Delay, s/veh		61.3			55.0			89.8			59.1	
Approach LOS		E			D			F			E	

Timer - Assigned Phs	1	2		4	5	6		8
Phs Duration (G+Y+Rc), s	11.8	51.8		34.6	16.8	46.8		34.7
Change Period (Y+Rc), s	* 5.7	5.4		6.1	* 5.7	5.4		6.1
Max Green Setting (Gmax), s	* 6.1	46.6		37.0	* 11	41.4		37.0
Max Q Clear Time (g_c+I1), s	17.3	40.1		24.6	11.2	43.4		25.4
Green Ext Time (p_c), s	0.0	5.3		2.1	0.0	0.0		1.4

Intersection Summary	
HCM 6th Ctrl Delay	69.8
HCM 6th LOS	E

Notes

* HCM 6th computational engine requires equal clearance times for the phases crossing the barrier.



Movement	EBL	EBT	EBR	WBL	WBT	WBR	NBL	NBT	NBR	SBL	SBT	SBR
Lane Configurations												
Traffic Volume (veh/h)	61	117	220	94	162	72	157	635	58	49	644	59
Future Volume (veh/h)	61	117	220	94	162	72	157	635	58	49	644	59
Initial Q (Qb), veh	0	0	0	0	0	0	0	0	0	0	0	0
Ped-Bike Adj(A_pbT)	1.00		0.91	1.00		0.95	1.00		0.96	1.00		0.95
Parking Bus, Adj	1.00	1.00	1.00	1.00	1.00	1.00	1.00	1.00	1.00	1.00	1.00	1.00
Work Zone On Approach		No			No			No			No	
Adj Sat Flow, veh/h/ln	1870	1870	1870	1870	1870	1870	1870	1870	1870	1870	1870	1870
Adj Flow Rate, veh/h	67	129	242	149	257	114	174	706	64	53	700	64
Peak Hour Factor	0.91	0.91	0.91	0.63	0.63	0.63	0.90	0.90	0.90	0.92	0.92	0.92
Percent Heavy Veh, %	2	2	2	2	2	2	2	2	2	2	2	2
Cap, veh/h	74	142	169	130	224	99	169	659	60	68	627	507
Arrive On Green	0.12	0.12	0.12	0.26	0.26	0.26	0.09	0.39	0.39	0.04	0.34	0.34
Sat Flow, veh/h	629	1210	1439	502	865	384	1781	1683	153	1781	1870	1513
Grp Volume(v), veh/h	196	0	242	520	0	0	174	0	770	53	700	64
Grp Sat Flow(s),veh/h/ln	1839	0	1439	1751	0	0	1781	0	1835	1781	1870	1513
Q Serve(g_s), s	12.6	0.0	14.1	31.1	0.0	0.0	11.4	0.0	47.0	3.5	40.2	3.5
Cycle Q Clear(g_c), s	12.6	0.0	14.1	31.1	0.0	0.0	11.4	0.0	47.0	3.5	40.2	3.5
Prop In Lane	0.34		1.00	0.29		0.22	1.00		0.08	1.00		1.00
Lane Grp Cap(c), veh/h	216	0	169	454	0	0	169	0	719	68	627	507
V/C Ratio(X)	0.91	0.00	1.43	1.15	0.00	0.00	1.03	0.00	1.07	0.78	1.12	0.13
Avail Cap(c_a), veh/h	216	0	169	454	0	0	169	0	719	86	627	507
HCM Platoon Ratio	1.00	1.00	1.00	1.00	1.00	1.00	1.00	1.00	1.00	1.00	1.00	1.00
Upstream Filter(I)	1.00	0.00	1.00	1.00	0.00	0.00	1.00	0.00	1.00	1.00	1.00	1.00
Uniform Delay (d), s/veh	52.3	0.0	53.0	44.5	0.0	0.0	54.3	0.0	36.5	57.2	39.9	27.7
Incr Delay (d2), s/veh	36.2	0.0	224.4	88.7	0.0	0.0	76.8	0.0	54.3	22.1	72.6	0.0
Initial Q Delay(d3),s/veh	0.0	0.0	0.0	0.0	0.0	0.0	0.0	0.0	0.0	0.0	0.0	0.0
%ile BackOfQ(50%),veh/ln	7.9	0.0	15.6	24.4	0.0	0.0	8.6	0.0	30.6	2.0	30.1	1.2
Unsig. Movement Delay, s/veh												
LnGrp Delay(d),s/veh	88.5	0.0	277.4	133.2	0.0	0.0	131.1	0.0	90.8	79.3	112.5	27.7
LnGrp LOS	F	A	F	F	A	A	F	A	F	E	F	C
Approach Vol, veh/h		438			520			944			817	
Approach Delay, s/veh		192.8			133.2			98.2			103.7	
Approach LOS		F			F			F			F	

Timer - Assigned Phs	1	2		4	5	6		8
Phs Duration (G+Y+Rc), s	10.2	52.8		20.0	17.0	46.0		37.0
Change Period (Y+Rc), s	5.6	5.8		5.9	5.6	5.8		5.9
Max Green Setting (Gmax), s	5.8	45.8		14.1	11.4	40.2		31.1
Max Q Clear Time (g_c+I1), s	15.5	49.0		16.1	13.4	42.2		33.1
Green Ext Time (p_c), s	0.0	0.0		0.0	0.0	0.0		0.0

Intersection Summary		
HCM 6th Ctrl Delay		121.8
HCM 6th LOS		F

Intersection	
Intersection Delay, s/veh	99.6
Intersection LOS	F

Movement	EBL	EBT	EBR	WBL	WBT	WBR	NBL	NBT	NBR	SBL	SBT	SBR
Lane Configurations												
Traffic Vol, veh/h	46	132	88	48	121	74	65	493	44	137	625	66
Future Vol, veh/h	46	132	88	48	121	74	65	493	44	137	625	66
Peak Hour Factor	0.81	0.81	0.81	0.89	0.89	0.89	0.86	0.86	0.86	0.73	0.73	0.73
Heavy Vehicles, %	2	2	2	2	2	2	2	2	2	2	2	2
Mvmt Flow	57	163	109	54	136	83	76	573	51	188	856	90
Number of Lanes	0	1	0	0	1	0	1	2	0	1	2	0

Approach	EB	WB	NB	SB
Opposing Approach	WB	EB	SB	NB
Opposing Lanes	1	1	3	3
Conflicting Approach Left	SB	NB	EB	WB
Conflicting Lanes Left	3	3	1	1
Conflicting Approach Right	NB	SB	WB	EB
Conflicting Lanes Right	3	3	1	1
HCM Control Delay	62.2	43.1	55	151.5
HCM LOS	F	E	F	F

Lane	NBLn1	NBLn2	NBLn3	EBLn1	WBLn1	SBLn1	SBLn2	SBLn3
Vol Left, %	100%	0%	0%	17%	20%	100%	0%	0%
Vol Thru, %	0%	100%	79%	50%	50%	0%	100%	76%
Vol Right, %	0%	0%	21%	33%	30%	0%	0%	24%
Sign Control	Stop	Stop	Stop	Stop	Stop	Stop	Stop	Stop
Traffic Vol by Lane	65	329	208	266	243	137	417	274
LT Vol	65	0	0	46	48	137	0	0
Through Vol	0	329	164	132	121	0	417	208
RT Vol	0	0	44	88	74	0	0	66
Lane Flow Rate	76	382	242	328	273	188	571	376
Geometry Grp	7	7	7	7	7	7	7	7
Degree of Util (X)	0.209	1.004	0.626	0.912	0.779	0.51	1.471	0.951
Departure Headway (Hd)	10.418	9.886	9.729	10.551	10.855	10.047	9.515	9.336
Convergence, Y/N	Yes	Yes	Yes	Yes	Yes	Yes	Yes	Yes
Cap	347	371	373	345	336	360	388	391
Service Time	8.118	7.586	7.429	8.251	8.555	7.747	7.215	7.036
HCM Lane V/C Ratio	0.219	1.03	0.649	0.951	0.813	0.522	1.472	0.962
HCM Control Delay	15.8	80.3	27.4	62.2	43.1	22.8	250.6	65.2
HCM Lane LOS	C	F	D	F	E	C	F	F
HCM 95th-tile Q	0.8	11.8	4.1	9.1	6.3	2.8	29.4	10.6



Movement	EBL	EBT	EBR	WBL	WBT	WBR	NBL	NBT	NBR	SBL	SBT	SBR
Lane Configurations												
Traffic Volume (veh/h)	84	54	235	65	31	18	101	818	39	20	992	61
Future Volume (veh/h)	84	54	235	65	31	18	101	818	39	20	992	61
Initial Q (Qb), veh	0	0	0	0	0	0	0	0	0	0	0	0
Ped-Bike Adj(A_pbT)	1.00		0.96	1.00		0.95	1.00		0.96	1.00		0.96
Parking Bus, Adj	1.00	1.00	1.00	1.00	1.00	1.00	1.00	1.00	1.00	1.00	1.00	1.00
Work Zone On Approach		No			No			No			No	
Adj Sat Flow, veh/h/ln	1870	1870	1870	1870	1870	1870	1870	1870	1870	1870	1870	1870
Adj Flow Rate, veh/h	108	69	263	86	41	24	104	843	40	22	1078	66
Peak Hour Factor	0.78	0.78	0.78	0.76	0.76	0.76	0.97	0.97	0.97	0.92	0.92	0.92
Percent Heavy Veh, %	2	2	2	2	2	2	2	2	2	2	2	2
Cap, veh/h	216	138	297	128	61	36	131	1517	72	66	1369	84
Arrive On Green	0.19	0.19	0.19	0.13	0.13	0.13	0.07	0.44	0.44	0.04	0.40	0.40
Sat Flow, veh/h	1107	708	1524	998	476	279	1781	3446	164	1781	3392	208
Grp Volume(v), veh/h	177	0	263	151	0	0	104	435	448	22	565	579
Grp Sat Flow(s),veh/h/ln	1815	0	1524	1752	0	0	1781	1777	1833	1781	1777	1822
Q Serve(g_s), s	8.5	0.0	16.4	8.0	0.0	0.0	5.6	17.7	17.7	1.2	27.1	27.1
Cycle Q Clear(g_c), s	8.5	0.0	16.4	8.0	0.0	0.0	5.6	17.7	17.7	1.2	27.1	27.1
Prop In Lane	0.61		1.00	0.57		0.16	1.00		0.09	1.00		0.11
Lane Grp Cap(c), veh/h	353	0	297	225	0	0	131	782	807	66	717	735
V/C Ratio(X)	0.50	0.00	0.89	0.67	0.00	0.00	0.79	0.56	0.56	0.34	0.79	0.79
Avail Cap(c_a), veh/h	396	0	333	473	0	0	192	813	838	152	773	792
HCM Platoon Ratio	1.00	1.00	1.00	1.00	1.00	1.00	1.00	1.00	1.00	1.00	1.00	1.00
Upstream Filter(I)	1.00	0.00	1.00	1.00	0.00	0.00	1.00	1.00	1.00	1.00	1.00	1.00
Uniform Delay (d), s/veh	35.0	0.0	38.2	40.5	0.0	0.0	44.4	20.2	20.2	45.8	25.4	25.4
Incr Delay (d2), s/veh	1.1	0.0	22.2	3.4	0.0	0.0	7.7	2.3	2.2	1.1	7.6	7.5
Initial Q Delay(d3),s/veh	0.0	0.0	0.0	0.0	0.0	0.0	0.0	0.0	0.0	0.0	0.0	0.0
%ile BackOfQ(50%),veh/ln	3.8	0.0	7.8	3.6	0.0	0.0	2.7	7.3	7.5	0.5	12.1	12.4
Unsig. Movement Delay, s/veh												
LnGrp Delay(d),s/veh	36.1	0.0	60.4	44.0	0.0	0.0	52.1	22.5	22.4	46.9	33.0	32.9
LnGrp LOS	D	A	E	D	A	A	D	C	C	D	C	C
Approach Vol, veh/h		440			151			987			1166	
Approach Delay, s/veh		50.6			44.0			25.6			33.2	
Approach LOS		D			D			C			C	

Timer - Assigned Phs	1	2		4	5	6		8
Phs Duration (G+Y+Rc), s	11.9	44.7		17.2	8.3	48.3		23.7
Change Period (Y+Rc), s	* 4.7	5.4		* 4.7	* 4.7	5.4		4.7
Max Green Setting (Gmax), s	* 7.2	42.4		* 26	* 8.3	44.6		21.3
Max Q Clear Time (g_c+I1), s	7.6	29.1		10.0	3.2	19.7		18.4
Green Ext Time (p_c), s	0.0	10.2		0.7	0.0	13.1		0.6

Intersection Summary	
HCM 6th Ctrl Delay	33.9
HCM 6th LOS	C

Notes

* HCM 6th computational engine requires equal clearance times for the phases crossing the barrier.



Movement	EBL	EBT	EBR	WBL	WBT	WBR	NBL	NBT	NBR	SBL	SBT	SBR
Lane Configurations												
Traffic Volume (veh/h)	110	65	264	84	70	59	214	598	45	65	831	101
Future Volume (veh/h)	110	65	264	84	70	59	214	598	45	65	831	101
Initial Q (Qb), veh	0	0	0	0	0	0	0	0	0	0	0	0
Ped-Bike Adj(A_pbT)	1.00		0.97	0.99		0.97	1.00		0.96	1.00		0.97
Parking Bus, Adj	1.00	1.00	1.00	1.00	1.00	1.00	1.00	1.00	1.00	1.00	1.00	1.00
Work Zone On Approach		No			No			No			No	
Adj Sat Flow, veh/h/ln	1870	1870	1870	1870	1870	1870	1870	1870	1870	1870	1870	1870
Adj Flow Rate, veh/h	122	72	293	98	81	69	230	643	48	69	884	107
Peak Hour Factor	0.90	0.90	0.90	0.86	0.86	0.86	0.93	0.93	0.93	0.94	0.94	0.94
Percent Heavy Veh, %	2	2	2	2	2	2	2	2	2	2	2	2
Cap, veh/h	150	683	564	156	119	87	263	1389	104	89	1011	122
Arrive On Green	0.08	0.37	0.37	0.23	0.23	0.23	0.15	0.42	0.42	0.05	0.32	0.32
Sat Flow, veh/h	1781	1870	1544	472	526	385	1781	3341	249	1781	3180	385
Grp Volume(v), veh/h	122	72	293	248	0	0	230	342	349	69	494	497
Grp Sat Flow(s),veh/h/ln	1781	1870	1544	1382	0	0	1781	1777	1813	1781	1777	1788
Q Serve(g_s), s	7.0	2.6	15.4	14.7	0.0	0.0	13.1	14.4	14.4	4.0	27.1	27.1
Cycle Q Clear(g_c), s	7.0	2.6	15.4	17.2	0.0	0.0	13.1	14.4	14.4	4.0	27.1	27.1
Prop In Lane	1.00		1.00	0.40		0.28	1.00		0.14	1.00		0.22
Lane Grp Cap(c), veh/h	150	683	564	362	0	0	263	739	754	89	565	568
V/C Ratio(X)	0.81	0.11	0.52	0.69	0.00	0.00	0.87	0.46	0.46	0.78	0.87	0.87
Avail Cap(c_a), veh/h	181	889	734	486	0	0	317	755	770	164	602	606
HCM Platoon Ratio	1.00	1.00	1.00	1.00	1.00	1.00	1.00	1.00	1.00	1.00	1.00	1.00
Upstream Filter(I)	1.00	1.00	1.00	1.00	0.00	0.00	1.00	1.00	1.00	1.00	1.00	1.00
Uniform Delay (d), s/veh	46.5	21.7	25.7	37.3	0.0	0.0	43.1	21.8	21.9	48.5	33.3	33.3
Incr Delay (d2), s/veh	17.3	0.0	0.3	1.1	0.0	0.0	20.1	0.6	0.6	5.4	13.5	13.4
Initial Q Delay(d3),s/veh	0.0	0.0	0.0	0.0	0.0	0.0	0.0	0.0	0.0	0.0	0.0	0.0
%ile BackOfQ(50%),veh/ln	3.8	1.2	5.6	5.9	0.0	0.0	7.2	6.0	6.1	1.9	13.5	13.6
Unsig. Movement Delay, s/veh												
LnGrp Delay(d),s/veh	63.8	21.7	26.0	38.3	0.0	0.0	63.2	22.5	22.5	53.9	46.8	46.7
LnGrp LOS	E	C	C	D	A	A	E	C	C	D	D	D
Approach Vol, veh/h		487			248			921			1060	
Approach Delay, s/veh		34.8			38.3			32.7			47.2	
Approach LOS		C			D			C			D	

Timer - Assigned Phs	1	2		4	5	6	7	8
Phs Duration (G+Y+Rc), s	10.8	48.7		43.9	20.8	38.6	14.3	29.6
Change Period (Y+Rc), s	5.6	5.7		6.2	5.6	5.7	5.6	6.2
Max Green Setting (Gmax), s	9.5	43.9		49.1	18.4	35.0	10.5	33.0
Max Q Clear Time (g_c+I1), s	10.0	16.4		17.4	15.1	29.1	9.0	19.2
Green Ext Time (p_c), s	0.0	6.7		0.8	0.2	3.7	0.0	0.9

Intersection Summary		
HCM 6th Ctrl Delay		39.2
HCM 6th LOS		D



Movement	EBL	EBT	EBR	WBL	WBT	WBR	NBL	NBT	NBR	SBL	SBT	SBR
Lane Configurations												
Traffic Volume (veh/h)	0	0	0	269	2	301	311	970	0	0	1312	109
Future Volume (veh/h)	0	0	0	269	2	301	311	970	0	0	1312	109
Initial Q (Qb), veh				0	0	0	0	0	0	0	0	0
Ped-Bike Adj(A_pbT)				1.00		0.97	1.00		1.00	1.00		0.96
Parking Bus, Adj				1.00	1.00	1.00	1.00	1.00	1.00	1.00	1.00	1.00
Work Zone On Approach					No			No			No	
Adj Sat Flow, veh/h/ln				1870	1870	1870	1870	1870	0	0	1870	1870
Adj Flow Rate, veh/h				289	2	324	420	1311	0	0	1491	124
Peak Hour Factor				0.93	0.93	0.93	0.74	0.74	0.74	0.88	0.88	0.88
Percent Heavy Veh, %				2	2	2	2	2	0	0	2	2
Cap, veh/h				449	3	390	345	2316	0	0	1377	114
Arrive On Green				0.25	0.25	0.25	0.19	0.65	0.00	0.00	0.42	0.42
Sat Flow, veh/h				1770	12	1534	1781	3647	0	0	3405	273
Grp Volume(v), veh/h				291	0	324	420	1311	0	0	795	820
Grp Sat Flow(s),veh/h/ln				1782	0	1534	1781	1777	0	0	1777	1808
Q Serve(g_s), s				16.2	0.0	22.2	21.5	22.6	0.0	0.0	46.2	46.2
Cycle Q Clear(g_c), s				16.2	0.0	22.2	21.5	22.6	0.0	0.0	46.2	46.2
Prop In Lane				0.99		1.00	1.00		0.00	0.00		0.15
Lane Grp Cap(c), veh/h				452	0	390	345	2316	0	0	739	752
V/C Ratio(X)				0.64	0.00	0.83	1.22	0.57	0.00	0.00	1.08	1.09
Avail Cap(c_a), veh/h				595	0	512	345	2316	0	0	739	752
HCM Platoon Ratio				1.00	1.00	1.00	1.00	1.00	1.00	1.00	1.00	1.00
Upstream Filter(I)				1.00	0.00	1.00	1.00	1.00	0.00	0.00	1.00	1.00
Uniform Delay (d), s/veh				37.0	0.0	39.2	44.8	10.7	0.0	0.0	32.5	32.5
Incr Delay (d2), s/veh				1.5	0.0	8.7	121.8	0.8	0.0	0.0	55.3	60.6
Initial Q Delay(d3),s/veh				0.0	0.0	0.0	0.0	0.0	0.0	0.0	0.0	0.0
%ile BackOfQ(50%),veh/ln				7.2	0.0	9.2	20.9	8.0	0.0	0.0	29.9	31.6
Unsig. Movement Delay, s/veh												
LnGrp Delay(d),s/veh				38.5	0.0	47.9	166.6	11.5	0.0	0.0	87.8	93.1
LnGrp LOS				D	A	D	F	B	A	A	F	F
Approach Vol, veh/h					615			1731			1615	
Approach Delay, s/veh					43.4			49.2			90.5	
Approach LOS					D			D			F	

Timer - Assigned Phs	1	2		4		6
Phs Duration (G+Y+Rc), s	26.2	51.6		33.3		77.8
Change Period (Y+Rc), s	* 4.7	5.4		5.1		5.4
Max Green Setting (Gmax), s	* 23	46.2		37.1		72.4
Max Q Clear Time (g_c+I1), s	20.5	48.2		24.2		24.6
Green Ext Time (p_c), s	0.0	0.0		2.5		31.2

Intersection Summary	
HCM 6th Ctrl Delay	65.1
HCM 6th LOS	E

Notes

* HCM 6th computational engine requires equal clearance times for the phases crossing the barrier.



Movement	EBL	EBT	EBR	WBL	WBT	WBR	NBL	NBT	NBR	SBL	SBT	SBR
Lane Configurations												
Traffic Volume (veh/h)	80	3	404	0	0	0	0	1200	370	428	1154	0
Future Volume (veh/h)	80	3	404	0	0	0	0	1200	370	428	1154	0
Initial Q (Qb), veh	0	0	0				0	0	0	0	0	0
Ped-Bike Adj(A_pbT)	1.00		0.97				1.00		0.96	1.00		1.00
Parking Bus, Adj	1.00	1.00	1.00				1.00	1.00	1.00	1.00	1.00	1.00
Work Zone On Approach		No						No			No	
Adj Sat Flow, veh/h/ln	1870	1870	1870				0	1870	1870	1870	1870	0
Adj Flow Rate, veh/h	99	4	499				0	1500	462	516	1390	0
Peak Hour Factor	0.81	0.81	0.81				0.80	0.80	0.80	0.83	0.83	0.83
Percent Heavy Veh, %	2	2	2				0	2	2	2	2	0
Cap, veh/h	59	2	296				0	1222	520	537	2433	0
Arrive On Green	0.23	0.23	0.23				0.00	0.34	0.34	0.30	0.68	0.00
Sat Flow, veh/h	258	10	1300				0	3647	1514	1781	3647	0
Grp Volume(v), veh/h	602	0	0				0	1500	462	516	1390	0
Grp Sat Flow(s),veh/h/ln	1569	0	0				0	1777	1514	1781	1777	0
Q Serve(g_s), s	27.3	0.0	0.0				0.0	41.2	34.5	34.1	24.3	0.0
Cycle Q Clear(g_c), s	27.3	0.0	0.0				0.0	41.2	34.5	34.1	24.3	0.0
Prop In Lane	0.16		0.83				0.00		1.00	1.00		0.00
Lane Grp Cap(c), veh/h	357	0	0				0	1222	520	537	2433	0
V/C Ratio(X)	1.68	0.00	0.00				0.00	1.23	0.89	0.96	0.57	0.00
Avail Cap(c_a), veh/h	357	0	0				0	1222	520	539	2437	0
HCM Platoon Ratio	1.00	1.00	1.00				1.00	1.00	1.00	1.00	1.00	1.00
Upstream Filter(I)	1.00	0.00	0.00				0.00	1.00	1.00	1.00	1.00	0.00
Uniform Delay (d), s/veh	46.3	0.0	0.0				0.0	39.3	37.1	41.1	9.8	0.0
Incr Delay (d2), s/veh	320.1	0.0	0.0				0.0	110.0	18.9	28.6	0.8	0.0
Initial Q Delay(d3),s/veh	0.0	0.0	0.0				0.0	0.0	0.0	0.0	0.0	0.0
%ile BackOfQ(50%),veh/ln	12.3	0.0	0.0				0.0	35.9	15.0	18.7	8.5	0.0
Unsig. Movement Delay, s/veh												
LnGrp Delay(d),s/veh	366.4	0.0	0.0				0.0	149.3	56.1	69.8	10.6	0.0
LnGrp LOS	F	A	A				A	F	E	E	B	A
Approach Vol, veh/h		602						1962			1906	
Approach Delay, s/veh		366.4						127.4			26.6	
Approach LOS		F						F			C	

Timer - Assigned Phs	2		5	6		8
Phs Duration (G+Y+Rc), s	87.5		40.9	46.6		32.4
Change Period (Y+Rc), s	5.4		* 4.7	5.4		5.1
Max Green Setting (Gmax), s	82.2		* 36	41.2		27.3
Max Q Clear Time (g_c+I1), s	26.3		36.1	43.2		29.3
Green Ext Time (p_c), s	37.0		0.0	0.0		0.0

Intersection Summary		
HCM 6th Ctrl Delay		116.6
HCM 6th LOS		F

Notes

* HCM 6th computational engine requires equal clearance times for the phases crossing the barrier.



Movement	EBL	EBT	EBR	WBL	WBT	WBR	NBL	NBT	NBR	SBL	SBT	SBR
Lane Configurations												
Traffic Volume (veh/h)	0	0	0	211	6	67	0	774	378	0	958	77
Future Volume (veh/h)	0	0	0	211	6	67	0	774	378	0	958	77
Initial Q (Qb), veh				0	0	0	0	0	0	0	0	0
Ped-Bike Adj(A_pbT)				1.00		0.97	1.00		0.96	1.00		0.96
Parking Bus, Adj				1.00	1.00	1.00	1.00	1.00	1.00	1.00	1.00	1.00
Work Zone On Approach					No			No			No	
Adj Sat Flow, veh/h/ln				1870	1870	1870	0	1870	1870	0	1870	1870
Adj Flow Rate, veh/h				264	8	84	0	832	406	0	1140	92
Peak Hour Factor				0.80	0.80	0.80	0.93	0.93	0.93	0.84	0.84	0.84
Percent Heavy Veh, %				2	2	2	0	2	2	0	2	2
Cap, veh/h				438	13	388	0	1683	722	0	2273	183
Arrive On Green				0.25	0.25	0.25	0.00	0.47	0.47	0.00	0.47	0.47
Sat Flow, veh/h				1731	52	1534	0	3647	1525	0	4968	387
Grp Volume(v), veh/h				272	0	84	0	832	406	0	808	424
Grp Sat Flow(s),veh/h/ln				1784	0	1534	0	1777	1525	0	1702	1783
Q Serve(g_s), s				6.1	0.0	2.0	0.0	7.4	8.7	0.0	7.5	7.5
Cycle Q Clear(g_c), s				6.1	0.0	2.0	0.0	7.4	8.7	0.0	7.5	7.5
Prop In Lane				0.97		1.00	0.00		1.00	0.00		0.22
Lane Grp Cap(c), veh/h				451	0	388	0	1683	722	0	1612	844
V/C Ratio(X)				0.60	0.00	0.22	0.00	0.49	0.56	0.00	0.50	0.50
Avail Cap(c_a), veh/h				1830	0	1574	0	4711	2021	0	4513	2363
HCM Platoon Ratio				1.00	1.00	1.00	1.00	1.00	1.00	1.00	1.00	1.00
Upstream Filter(I)				1.00	0.00	1.00	0.00	1.00	1.00	0.00	1.00	1.00
Uniform Delay (d), s/veh				15.0	0.0	13.5	0.0	8.3	8.6	0.0	8.3	8.3
Incr Delay (d2), s/veh				1.3	0.0	0.3	0.0	0.2	0.7	0.0	0.2	0.5
Initial Q Delay(d3),s/veh				0.0	0.0	0.0	0.0	0.0	0.0	0.0	0.0	0.0
%ile BackOfQ(50%),veh/ln				2.3	0.0	0.6	0.0	1.9	2.0	0.0	1.8	2.0
Unsig. Movement Delay, s/veh												
LnGrp Delay(d),s/veh				16.3	0.0	13.8	0.0	8.5	9.3	0.0	8.5	8.8
LnGrp LOS				B	A	B	A	A	A	A	A	A
Approach Vol, veh/h					356			1238			1232	
Approach Delay, s/veh					15.7			8.8			8.6	
Approach LOS					B			A			A	

Timer - Assigned Phs	2		6		8			
Phs Duration (G+Y+Rc), s	28.0		28.0		17.7			
Change Period (Y+Rc), s	6.4		6.4		6.1			
Max Green Setting (Gmax), s	60.6		60.6		46.9			
Max Q Clear Time (g_c+I1), s	10.7		9.5		8.1			
Green Ext Time (p_c), s	8.8		10.4		2.1			

Intersection Summary		
HCM 6th Ctrl Delay	9.6	
HCM 6th LOS	A	



Movement	EBL	EBT	EBR	WBL	WBT	WBR	NBL	NBT	NBR	SBL	SBT	SBR
Lane Configurations												
Traffic Volume (veh/h)	53	2	470	0	0	0	0	1099	269	135	1033	0
Future Volume (veh/h)	53	2	470	0	0	0	0	1099	269	135	1033	0
Initial Q (Qb), veh	0	0	0				0	0	0	0	0	0
Ped-Bike Adj(A_pbT)	1.00		0.95				1.00		0.96	1.00		1.00
Parking Bus, Adj	1.00	1.00	1.00				1.00	1.00	1.00	1.00	1.00	1.00
Work Zone On Approach		No						No			No	
Adj Sat Flow, veh/h/ln	1870	1870	1870				0	1870	1870	1870	1870	0
Adj Flow Rate, veh/h	62	2	547				0	1157	283	150	1148	0
Peak Hour Factor	0.86	0.86	0.86				0.95	0.95	0.95	0.90	0.90	0.90
Percent Heavy Veh, %	2	2	2				0	2	2	2	2	0
Cap, veh/h	455	15	696				0	1478	633	188	2093	0
Arrive On Green	0.26	0.26	0.26				0.00	0.42	0.42	0.11	0.59	0.00
Sat Flow, veh/h	1728	56	2643				0	3647	1521	1781	3647	0
Grp Volume(v), veh/h	64	0	547				0	1157	283	150	1148	0
Grp Sat Flow(s),veh/h/ln	1784	0	1322				0	1777	1521	1781	1777	0
Q Serve(g_s), s	2.3	0.0	16.3				0.0	23.9	11.3	7.0	16.6	0.0
Cycle Q Clear(g_c), s	2.3	0.0	16.3				0.0	23.9	11.3	7.0	16.6	0.0
Prop In Lane	0.97		1.00				0.00		1.00	1.00		0.00
Lane Grp Cap(c), veh/h	470	0	696				0	1478	633	188	2093	0
V/C Ratio(X)	0.14	0.00	0.79				0.00	0.78	0.45	0.80	0.55	0.00
Avail Cap(c_a), veh/h	757	0	1121				0	1956	837	406	3006	0
HCM Platoon Ratio	1.00	1.00	1.00				1.00	1.00	1.00	1.00	1.00	1.00
Upstream Filter(I)	1.00	0.00	1.00				0.00	1.00	1.00	1.00	1.00	0.00
Uniform Delay (d), s/veh	23.8	0.0	29.0				0.0	21.4	17.7	37.0	10.6	0.0
Incr Delay (d2), s/veh	0.1	0.0	2.0				0.0	1.6	0.5	7.5	0.2	0.0
Initial Q Delay(d3),s/veh	0.0	0.0	0.0				0.0	0.0	0.0	0.0	0.0	0.0
%ile BackOfQ(50%),veh/ln	1.0	0.0	5.2				0.0	9.2	3.7	3.3	5.4	0.0
Unsig. Movement Delay, s/veh												
LnGrp Delay(d),s/veh	24.0	0.0	31.0				0.0	23.0	18.2	44.5	10.8	0.0
LnGrp LOS	C	A	C				A	C	B	D	B	A
Approach Vol, veh/h		611						1440			1298	
Approach Delay, s/veh		30.2						22.0			14.7	
Approach LOS		C						C			B	

Timer - Assigned Phs	1	2	4	6
Phs Duration (G+Y+Rc), s	14.6	41.6	28.4	56.3
Change Period (Y+Rc), s	5.7	6.4	6.1	6.4
Max Green Setting (Gmax), s	13.0	46.6	35.9	71.6
Max Q Clear Time (g_c+I1), s	9.0	25.9	18.3	18.6
Green Ext Time (p_c), s	0.3	9.4	2.7	10.5

Intersection Summary	
HCM 6th Ctrl Delay	20.7
HCM 6th LOS	C

Notes

* HCM 6th computational engine requires equal clearance times for the phases crossing the barrier.



Movement	EBL	EBT	EBR	WBL	WBT	WBR	NBL	NBT	NBR	SBL	SBT	SBR
Lane Configurations												
Traffic Volume (veh/h)	46	82	36	3	121	88	31	77	3	121	161	39
Future Volume (veh/h)	46	82	36	3	121	88	31	77	3	121	161	39
Initial Q (Qb), veh	0	0	0	0	0	0	0	0	0	0	0	0
Ped-Bike Adj(A_pbT)	1.00		0.96	1.00		0.95	1.00		0.98	1.00		0.96
Parking Bus, Adj	1.00	1.00	1.00	1.00	1.00	1.00	1.00	1.00	1.00	1.00	1.00	1.00
Work Zone On Approach		No			No			No			No	
Adj Sat Flow, veh/h/ln	1870	1870	1870	1870	1870	1870	1870	1870	1870	1870	1870	1870
Adj Flow Rate, veh/h	52	92	40	3	133	97	45	112	4	130	173	42
Peak Hour Factor	0.89	0.89	0.89	0.91	0.91	0.91	0.69	0.69	0.69	0.93	0.93	0.93
Percent Heavy Veh, %	2	2	2	2	2	2	2	2	2	2	2	2
Cap, veh/h	81	346	282	7	269	217	74	1576	686	164	1399	329
Arrive On Green	0.05	0.19	0.19	0.00	0.14	0.14	0.04	0.44	0.44	0.09	0.49	0.49
Sat Flow, veh/h	1781	1870	1522	1781	1870	1510	1781	3554	1548	1781	2831	666
Grp Volume(v), veh/h	52	92	40	3	133	97	45	112	4	130	107	108
Grp Sat Flow(s),veh/h/ln	1781	1870	1522	1781	1870	1510	1781	1777	1548	1781	1777	1720
Q Serve(g_s), s	2.0	3.0	1.6	0.1	4.6	4.1	1.8	1.3	0.1	5.0	2.3	2.4
Cycle Q Clear(g_c), s	2.0	3.0	1.6	0.1	4.6	4.1	1.8	1.3	0.1	5.0	2.3	2.4
Prop In Lane	1.00		1.00	1.00		1.00	1.00		1.00	1.00		0.39
Lane Grp Cap(c), veh/h	81	346	282	7	269	217	74	1576	686	164	878	850
V/C Ratio(X)	0.64	0.27	0.14	0.42	0.49	0.45	0.61	0.07	0.01	0.79	0.12	0.13
Avail Cap(c_a), veh/h	172	954	777	126	906	732	162	1576	686	210	878	850
HCM Platoon Ratio	1.00	1.00	1.00	1.00	1.00	1.00	1.00	1.00	1.00	1.00	1.00	1.00
Upstream Filter(I)	1.00	1.00	1.00	1.00	1.00	1.00	1.00	1.00	1.00	1.00	1.00	1.00
Uniform Delay (d), s/veh	33.1	24.6	24.1	35.1	27.8	27.6	33.3	11.3	11.0	31.4	9.6	9.6
Incr Delay (d2), s/veh	3.2	0.4	0.2	13.6	1.4	1.4	3.0	0.1	0.0	11.2	0.3	0.3
Initial Q Delay(d3),s/veh	0.0	0.0	0.0	0.0	0.0	0.0	0.0	0.0	0.0	0.0	0.0	0.0
%ile BackOfQ(50%),veh/ln	0.9	1.3	0.6	0.1	2.1	1.5	0.8	0.5	0.0	2.6	0.9	0.9
Unsig. Movement Delay, s/veh												
LnGrp Delay(d),s/veh	36.3	25.0	24.3	48.6	29.2	29.1	36.2	11.4	11.0	42.6	9.9	9.9
LnGrp LOS	D	C	C	D	C	C	D	B	B	D	A	A
Approach Vol, veh/h		184			233			161			345	
Approach Delay, s/veh		28.1			29.4			18.3			22.2	
Approach LOS		C			C			B			C	

Timer - Assigned Phs	1	2	3	4	5	6	7	8
Phs Duration (G+Y+Rc), s	7.5	40.0	7.8	15.3	11.1	36.4	4.9	18.2
Change Period (Y+Rc), s	4.6	5.1	4.6	5.1	4.6	5.1	4.6	5.1
Max Green Setting (Gmax), s	6.4	33.2	6.8	34.2	8.3	31.3	5.0	36.0
Max Q Clear Time (g_c+I1), s	3.8	4.4	4.0	6.6	7.0	3.3	2.1	5.0
Green Ext Time (p_c), s	0.0	1.8	0.0	1.1	0.0	0.9	0.0	0.6

Intersection Summary	
HCM 6th Ctrl Delay	24.5
HCM 6th LOS	C



Movement	EBL	EBT	EBR	WBL	WBT	WBR	NBL	NBT	NBR	SBL	SBT	SBR
Lane Configurations												
Traffic Volume (veh/h)	237	86	158	80	79	362	161	793	65	464	878	176
Future Volume (veh/h)	237	86	158	80	79	362	161	793	65	464	878	176
Initial Q (Qb), veh	0	0	0	0	0	0	0	0	0	0	0	0
Ped-Bike Adj(A_pbT)	1.00		0.96	1.00		0.97	1.00		0.96	1.00		0.97
Parking Bus, Adj	1.00	1.00	1.00	1.00	1.00	1.00	1.00	1.00	1.00	1.00	1.00	1.00
Work Zone On Approach		No			No			No			No	
Adj Sat Flow, veh/h/ln	1870	1870	1870	1870	1870	1870	1870	1870	1870	1870	1870	1870
Adj Flow Rate, veh/h	266	97	178	108	107	489	218	1072	88	546	1033	207
Peak Hour Factor	0.89	0.89	0.89	0.74	0.74	0.74	0.74	0.74	0.74	0.85	0.85	0.85
Percent Heavy Veh, %	2	2	2	2	2	2	2	2	2	2	2	2
Cap, veh/h	326	343	279	447	469	645	212	718	59	293	783	156
Arrive On Green	0.18	0.18	0.18	0.25	0.25	0.25	0.12	0.22	0.22	0.16	0.27	0.27
Sat Flow, veh/h	1781	1870	1522	1781	1870	1534	1781	3315	272	1781	2933	586
Grp Volume(v), veh/h	266	97	178	108	107	489	218	574	586	546	624	616
Grp Sat Flow(s),veh/h/ln	1781	1870	1522	1781	1870	1534	1781	1777	1810	1781	1777	1743
Q Serve(g_s), s	20.6	6.4	15.5	6.9	6.5	36.0	17.1	31.1	31.1	23.6	38.3	38.3
Cycle Q Clear(g_c), s	20.6	6.4	15.5	6.9	6.5	36.0	17.1	31.1	31.1	23.6	38.3	38.3
Prop In Lane	1.00		1.00	1.00		1.00	1.00		0.15	1.00		0.34
Lane Grp Cap(c), veh/h	326	343	279	447	469	645	212	385	392	293	474	465
V/C Ratio(X)	0.82	0.28	0.64	0.24	0.23	0.76	1.03	1.49	1.49	1.86	1.32	1.32
Avail Cap(c_a), veh/h	410	430	350	447	469	645	212	385	392	293	474	465
HCM Platoon Ratio	1.00	1.00	1.00	1.00	1.00	1.00	1.00	1.00	1.00	1.00	1.00	1.00
Upstream Filter(I)	1.00	1.00	1.00	1.00	1.00	1.00	1.00	1.00	1.00	1.00	1.00	1.00
Uniform Delay (d), s/veh	56.3	50.5	54.2	42.9	42.7	36.0	63.2	56.2	56.2	59.9	52.6	52.6
Incr Delay (d2), s/veh	11.0	0.6	3.6	0.1	0.1	4.6	68.9	234.5	235.0	401.5	156.8	159.9
Initial Q Delay(d3),s/veh	0.0	0.0	0.0	0.0	0.0	0.0	0.0	0.0	0.0	0.0	0.0	0.0
%ile BackOfQ(50%),veh/ln	10.1	3.0	6.2	3.1	3.0	15.2	11.7	38.8	39.6	43.2	37.4	37.1
Unsig. Movement Delay, s/veh												
LnGrp Delay(d),s/veh	67.3	51.1	57.8	43.0	42.8	40.6	132.1	290.7	291.2	461.4	209.4	212.5
LnGrp LOS	E	D	E	D	D	D	F	F	F	F	F	F
Approach Vol, veh/h		541			704			1378			1786	
Approach Delay, s/veh		61.3			41.3			265.8			287.5	
Approach LOS		E			D			F			F	

Timer - Assigned Phs	1	2		4	5	6		8
Phs Duration (G+Y+Rc), s	21.8	45.6		42.4	29.0	38.4		33.7
Change Period (Y+Rc), s	* 4.7	* 7.3		6.4	5.4	7.3		7.4
Max Green Setting (Gmax), s	* 17	* 38		36.0	23.6	30.9		33.0
Max Q Clear Time (g_c+I1), s	19.1	40.3		38.0	25.6	33.1		22.6
Green Ext Time (p_c), s	0.0	0.0		0.0	0.0	0.0		2.2

Intersection Summary	
HCM 6th Ctrl Delay	213.7
HCM 6th LOS	F

Notes

* HCM 6th computational engine requires equal clearance times for the phases crossing the barrier.

Intersection	
Int Delay, s/veh	0.7

Movement	EBL	EBR	NBL	NBT	SBT	SBR
Lane Configurations						
Traffic Vol, veh/h	7	195	95	479	606	7
Future Vol, veh/h	7	195	95	479	606	7
Conflicting Peds, #/hr	10	10	10	0	0	10
Sign Control	Free	Free	Free	Free	Stop	Stop
RT Channelized	-	None	-	None	-	None
Storage Length	0	-	-	-	-	-
Veh in Median Storage, #	2	-	-	0	0	-
Grade, %	0	-	-	0	0	-
Peak Hour Factor	85	85	85	85	73	73
Heavy Vehicles, %	2	2	2	2	2	2
Mvmt Flow	8	229	112	564	830	10

Major/Minor	Major1		Minor2	
Conflicting Flow All	10	0	798	20
Stage 1	-	-	10	-
Stage 2	-	-	788	-
Critical Hdwy	4.14	-	6.54	6.94
Critical Hdwy Stg 1	-	-	-	-
Critical Hdwy Stg 2	-	-	5.54	-
Follow-up Hdwy	2.22	-	4.02	3.32
Pot Cap-1 Maneuver	1608	-	~ 317	1053
Stage 1	-	-	-	-
Stage 2	-	-	~ 400	-
Platoon blocked, %		-		
Mov Cap-1 Maneuver	1593	-	0	1033
Mov Cap-2 Maneuver	-	-	0	-
Stage 1	-	-	0	-
Stage 2	-	-	0	-

Approach	NB	SB
HCM Control Delay, s	1.5	
HCM LOS		-

Minor Lane/Major Mvmt	NBL	NBT	SBLn1	SBLn2
Capacity (veh/h)	1593	-	-	1033
HCM Lane V/C Ratio	0.07	-	-	0.411
HCM Control Delay (s)	7.4	0.3	-	10.9
HCM Lane LOS	A	A	-	B
HCM 95th %tile Q(veh)	0.2	-	-	2

Notes			
~: Volume exceeds capacity	$: Delay exceeds 300s	+: Computation Not Defined	*: All major volume in platoon



Movement	WBL	WBR	NBT	NBR	SBL	SBT
Lane Configurations						
Traffic Volume (veh/h)	121	297	514	69	277	797
Future Volume (veh/h)	121	297	514	69	277	797
Initial Q (Qb), veh	0	0	0	0	0	0
Ped-Bike Adj(A_pbT)	1.00	1.00		0.95	1.00	
Parking Bus, Adj	1.00	1.00	1.00	1.00	1.00	1.00
Work Zone On Approach	No		No			No
Adj Sat Flow, veh/h/ln	1870	1870	1870	1870	1870	1870
Adj Flow Rate, veh/h	224	457	559	21	298	857
Peak Hour Factor	0.54	0.54	0.92	0.92	0.93	0.93
Percent Heavy Veh, %	2	2	2	2	2	2
Cap, veh/h	565	503	1129	42	331	1034
Arrive On Green	0.32	0.32	0.32	0.32	0.19	0.55
Sat Flow, veh/h	1781	1585	3579	131	1781	1870
Grp Volume(v), veh/h	224	457	285	295	298	857
Grp Sat Flow(s),veh/h/ln	1781	1585	1777	1839	1781	1870
Q Serve(g_s), s	10.6	29.8	13.9	14.0	17.6	40.8
Cycle Q Clear(g_c), s	10.6	29.8	13.9	14.0	17.6	40.8
Prop In Lane	1.00	1.00		0.07	1.00	
Lane Grp Cap(c), veh/h	565	503	575	596	331	1034
V/C Ratio(X)	0.40	0.91	0.49	0.50	0.90	0.83
Avail Cap(c_a), veh/h	1054	937	575	596	616	1276
HCM Platoon Ratio	1.00	1.00	1.00	1.00	1.00	1.00
Upstream Filter(I)	1.00	1.00	1.00	1.00	1.00	1.00
Uniform Delay (d), s/veh	28.8	35.3	29.4	29.4	43.0	19.9
Incr Delay (d2), s/veh	0.5	6.7	2.4	2.3	3.7	6.7
Initial Q Delay(d3),s/veh	0.0	0.0	0.0	0.0	0.0	0.0
%ile BackOfQ(50%),veh/ln	4.5	24.0	6.1	6.3	7.9	17.8
Unsig. Movement Delay, s/veh						
LnGrp Delay(d),s/veh	29.2	42.0	31.7	31.7	46.6	26.5
LnGrp LOS	C	D	C	C	D	C
Approach Vol, veh/h	681		580			1155
Approach Delay, s/veh	37.8		31.7			31.7
Approach LOS	D		C			C

Timer - Assigned Phs		2		4	5	6
Phs Duration (G+Y+Rc), s		67.5		40.4	24.7	42.7
Change Period (Y+Rc), s		* 7.8		6.2	* 4.7	7.8
Max Green Setting (Gmax), s		* 74		63.8	* 37	30.2
Max Q Clear Time (g_c+I1), s		42.8		31.8	19.6	16.0
Green Ext Time (p_c), s		16.9		2.4	0.4	6.0

Intersection Summary	
HCM 6th Ctrl Delay	33.4
HCM 6th LOS	C

Notes

* HCM 6th computational engine requires equal clearance times for the phases crossing the barrier.

Intersection	
Int Delay, s/veh	5.8

Movement	EBT	EBR	WBL	WBT	NBL	NBR
Lane Configurations						
Traffic Vol, veh/h	364	102	108	244	60	90
Future Vol, veh/h	364	102	108	244	60	90
Conflicting Peds, #/hr	0	10	10	0	10	10
Sign Control	Free	Free	Free	Free	Stop	Stop
RT Channelized	-	None	-	None	-	None
Storage Length	-	-	-	-	0	-
Veh in Median Storage, #	0	-	-	0	0	-
Grade, %	0	-	-	0	0	-
Peak Hour Factor	67	67	91	91	86	86
Heavy Vehicles, %	2	2	2	2	2	2
Mvmt Flow	543	152	119	268	70	105

Major/Minor	Major1		Major2		Minor1	
Conflicting Flow All	0	0	705	0	1145	639
Stage 1	-	-	-	-	629	-
Stage 2	-	-	-	-	516	-
Critical Hdwy	-	-	4.12	-	6.42	6.22
Critical Hdwy Stg 1	-	-	-	-	5.42	-
Critical Hdwy Stg 2	-	-	-	-	5.42	-
Follow-up Hdwy	-	-	2.218	-	3.518	3.318
Pot Cap-1 Maneuver	-	-	893	-	221	476
Stage 1	-	-	-	-	531	-
Stage 2	-	-	-	-	599	-
Platoon blocked, %	-	-		-		
Mov Cap-1 Maneuver	-	-	884	-	182	467
Mov Cap-2 Maneuver	-	-	-	-	182	-
Stage 1	-	-	-	-	526	-
Stage 2	-	-	-	-	500	-

Approach	EB	WB	NB
HCM Control Delay, s	0	3	35.2
HCM LOS			E

Minor Lane/Major Mvmt	NBLn1	EBT	EBR	WBL	WBT
Capacity (veh/h)	287	-	-	884	-
HCM Lane V/C Ratio	0.608	-	-	0.134	-
HCM Control Delay (s)	35.2	-	-	9.7	0
HCM Lane LOS	E	-	-	A	A
HCM 95th %tile Q(veh)	3.7	-	-	0.5	-

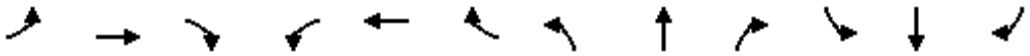

Movement	EBL	EBT	EBR	WBL	WBT	WBR	NBL	NBT	NBR	SBL	SBT	SBR
Lane Configurations												
Traffic Volume (veh/h)	139	217	97	46	118	210	107	562	39	308	706	126
Future Volume (veh/h)	139	217	97	46	118	210	107	562	39	308	706	126
Initial Q (Qb), veh	0	0	0	0	0	0	0	0	0	0	0	0
Ped-Bike Adj(A_pbT)	1.00		0.97	1.00		1.00	1.00		0.97	1.00		0.97
Parking Bus, Adj	1.00	1.00	1.00	1.00	1.00	1.00	1.00	1.00	1.00	1.00	1.00	1.00
Work Zone On Approach		No			No			No			No	
Adj Sat Flow, veh/h/ln	1870	1870	1870	1870	1870	1870	1870	1870	1870	1870	1870	1870
Adj Flow Rate, veh/h	204	319	143	51	131	0	109	573	40	328	751	134
Peak Hour Factor	0.68	0.68	0.68	0.90	0.90	0.90	0.98	0.98	0.98	0.94	0.94	0.94
Percent Heavy Veh, %	2	2	2	2	2	2	2	2	2	2	2	2
Cap, veh/h	247	606	265	75	561		141	873	377	380	1139	203
Arrive On Green	0.14	0.25	0.25	0.04	0.16	0.00	0.08	0.25	0.25	0.21	0.38	0.38
Sat Flow, veh/h	1781	2379	1040	1781	3554	1585	1781	3554	1533	1781	2999	535
Grp Volume(v), veh/h	204	236	226	51	131	0	109	573	40	328	445	440
Grp Sat Flow(s),veh/h/ln	1781	1777	1643	1781	1777	1585	1781	1777	1533	1781	1777	1758
Q Serve(g_s), s	9.2	9.4	9.8	2.3	2.7	0.0	4.9	11.9	1.7	14.6	17.0	17.0
Cycle Q Clear(g_c), s	9.2	9.4	9.8	2.3	2.7	0.0	4.9	11.9	1.7	14.6	17.0	17.0
Prop In Lane	1.00		0.63	1.00		1.00	1.00		1.00	1.00		0.30
Lane Grp Cap(c), veh/h	247	453	419	75	561		141	873	377	380	675	667
V/C Ratio(X)	0.83	0.52	0.54	0.68	0.23		0.77	0.66	0.11	0.86	0.66	0.66
Avail Cap(c_a), veh/h	442	948	877	225	1465		377	1521	656	875	1257	1244
HCM Platoon Ratio	1.00	1.00	1.00	1.00	1.00	1.00	1.00	1.00	1.00	1.00	1.00	1.00
Upstream Filter(I)	1.00	1.00	1.00	1.00	1.00	0.00	1.00	1.00	1.00	1.00	1.00	1.00
Uniform Delay (d), s/veh	34.4	26.3	26.5	38.9	30.3	0.0	37.1	27.9	24.0	31.2	21.1	21.1
Incr Delay (d2), s/veh	6.8	0.9	1.1	10.5	0.2	0.0	8.7	0.8	0.1	5.9	1.1	1.1
Initial Q Delay(d3),s/veh	0.0	0.0	0.0	0.0	0.0	0.0	0.0	0.0	0.0	0.0	0.0	0.0
%ile BackOfQ(50%),veh/ln	4.2	3.8	3.7	1.2	1.1	0.0	2.4	4.8	0.6	6.5	6.6	6.6
Unsig. Movement Delay, s/veh												
LnGrp Delay(d),s/veh	41.3	27.3	27.6	49.4	30.5	0.0	45.8	28.7	24.1	37.1	22.2	22.2
LnGrp LOS	D	C	C	D	C		D	C	C	D	C	C
Approach Vol, veh/h		666			182	A		722			1213	
Approach Delay, s/veh		31.7			35.8			31.1			26.2	
Approach LOS		C			D			C			C	

Timer - Assigned Phs	1	2	3	4	5	6	7	8
Phs Duration (G+Y+Rc), s	22.1	26.0	8.0	26.1	11.1	37.0	16.0	18.1
Change Period (Y+Rc), s	4.6	5.8	4.6	5.1	4.6	5.8	4.6	5.1
Max Green Setting (Gmax), s	40.4	35.2	10.4	43.9	17.4	58.2	20.4	33.9
Max Q Clear Time (g_c+I1), s	16.6	13.9	4.3	11.8	6.9	19.0	11.2	4.7
Green Ext Time (p_c), s	0.9	3.7	0.0	2.8	0.2	6.2	0.4	0.7

Intersection Summary	
HCM 6th Ctrl Delay	29.4
HCM 6th LOS	C

Notes

Unsignalized Delay for [WBR] is excluded from calculations of the approach delay and intersection delay.

Intersection	
Intersection Delay, s/veh	13.4
Intersection LOS	B

Movement	EBL	EBT	EBR	WBL	WBT	WBR	NBL	NBT	NBR	SBL	SBT	SBR
Lane Configurations												
Traffic Vol, veh/h	40	159	8	18	144	58	10	41	48	49	35	38
Future Vol, veh/h	40	159	8	18	144	58	10	41	48	49	35	38
Peak Hour Factor	0.74	0.74	0.74	0.79	0.79	0.79	0.45	0.45	0.45	0.87	0.87	0.87
Heavy Vehicles, %	2	2	2	2	2	2	2	2	2	2	2	2
Mvmt Flow	54	215	11	23	182	73	22	91	107	56	40	44
Number of Lanes	0	1	1	0	1	0	0	1	0	0	1	1

Approach	EB	WB	NB	SB
Opposing Approach	WB	EB	SB	NB
Opposing Lanes	1	2	2	1
Conflicting Approach Left	SB	NB	EB	WB
Conflicting Lanes Left	2	1	2	1
Conflicting Approach Right	NB	SB	WB	EB
Conflicting Lanes Right	1	2	1	2
HCM Control Delay	14.1	14.4	13.2	10.6
HCM LOS	B	B	B	B

Lane	NBLn1	EBLn1	EBLn2	WBLn1	SBLn1	SBLn2
Vol Left, %	10%	20%	0%	8%	58%	0%
Vol Thru, %	41%	80%	0%	65%	42%	0%
Vol Right, %	48%	0%	100%	26%	0%	100%
Sign Control	Stop	Stop	Stop	Stop	Stop	Stop
Traffic Vol by Lane	99	199	8	220	84	38
LT Vol	10	40	0	18	49	0
Through Vol	41	159	0	144	35	0
RT Vol	48	0	8	58	0	38
Lane Flow Rate	220	269	11	278	97	44
Geometry Grp	6	7	7	6	7	7
Degree of Util (X)	0.382	0.465	0.016	0.469	0.186	0.072
Departure Headway (Hd)	6.251	6.221	5.408	6.065	6.94	5.929
Convergence, Y/N	Yes	Yes	Yes	Yes	Yes	Yes
Cap	574	578	658	590	515	600
Service Time	4.318	3.981	3.168	4.127	4.715	3.703
HCM Lane V/C Ratio	0.383	0.465	0.017	0.471	0.188	0.073
HCM Control Delay	13.2	14.3	8.3	14.4	11.3	9.2
HCM Lane LOS	B	B	A	B	B	A
HCM 95th-tile Q	1.8	2.5	0	2.5	0.7	0.2

Intersection	
Intersection Delay, s/veh	21.6
Intersection LOS	C

Movement	EBL	EBT	EBR	WBL	WBT	WBR	NBL	NBT	NBR	SBL	SBT	SBR
Lane Configurations												
Traffic Vol, veh/h	4	179	24	2	161	162	22	79	1	114	128	8
Future Vol, veh/h	4	179	24	2	161	162	22	79	1	114	128	8
Peak Hour Factor	0.68	0.68	0.68	0.66	0.66	0.66	0.70	0.70	0.70	0.84	0.84	0.84
Heavy Vehicles, %	2	2	2	2	2	2	2	2	2	2	2	2
Mvmt Flow	6	263	35	3	244	245	31	113	1	136	152	10
Number of Lanes	0	1	0	0	1	0	0	1	0	0	1	0

Approach	EB	WB	NB	SB
Opposing Approach	WB	EB	SB	NB
Opposing Lanes	1	1	1	1
Conflicting Approach Left	SB	NB	EB	WB
Conflicting Lanes Left	1	1	1	1
Conflicting Approach Right	NB	SB	WB	EB
Conflicting Lanes Right	1	1	1	1
HCM Control Delay	17.1	28.7	13.4	18.4
HCM LOS	C	D	B	C

Lane	NBLn1	EBLn1	WBLn1	SBLn1
Vol Left, %	22%	2%	1%	46%
Vol Thru, %	77%	86%	50%	51%
Vol Right, %	1%	12%	50%	3%
Sign Control	Stop	Stop	Stop	Stop
Traffic Vol by Lane	102	207	325	250
LT Vol	22	4	2	114
Through Vol	79	179	161	128
RT Vol	1	24	162	8
Lane Flow Rate	146	304	492	298
Geometry Grp	1	1	1	1
Degree of Util (X)	0.294	0.545	0.803	0.563
Departure Headway (Hd)	7.252	6.449	5.872	6.811
Convergence, Y/N	Yes	Yes	Yes	Yes
Cap	493	557	616	527
Service Time	5.349	4.529	3.94	4.89
HCM Lane V/C Ratio	0.296	0.546	0.799	0.565
HCM Control Delay	13.4	17.1	28.7	18.4
HCM Lane LOS	B	C	D	C
HCM 95th-tile Q	1.2	3.3	8	3.4

Intersection	
Intersection Delay, s/veh	63.4
Intersection LOS	F

Movement	EBL	EBT	EBR	WBL	WBT	WBR	NBL	NBT	NBR	SBL	SBT	SBR
Lane Configurations												
Traffic Vol, veh/h	89	315	14	32	228	127	38	124	66	201	185	58
Future Vol, veh/h	89	315	14	32	228	127	38	124	66	201	185	58
Peak Hour Factor	0.86	0.86	0.86	0.86	0.86	0.86	0.65	0.65	0.65	0.85	0.85	0.85
Heavy Vehicles, %	2	2	2	2	2	2	2	2	2	2	2	2
Mvmt Flow	103	366	16	37	265	148	58	191	102	236	218	68
Number of Lanes	1	1	0	0	1	0	1	1	0	1	1	0

Approach	EB	WB	NB	SB
Opposing Approach	WB	EB	SB	NB
Opposing Lanes	1	2	2	2
Conflicting Approach Left	SB	NB	EB	WB
Conflicting Lanes Left	2	2	2	1
Conflicting Approach Right	NB	SB	WB	EB
Conflicting Lanes Right	2	2	1	2
HCM Control Delay	57.8	129.9	32.8	31.7
HCM LOS	F	F	D	D

Lane	NBLn1	NBLn2	EBLn1	EBLn2	WBLn1	SBLn1	SBLn2
Vol Left, %	100%	0%	100%	0%	8%	100%	0%
Vol Thru, %	0%	65%	0%	96%	59%	0%	76%
Vol Right, %	0%	35%	0%	4%	33%	0%	24%
Sign Control	Stop	Stop	Stop	Stop	Stop	Stop	Stop
Traffic Vol by Lane	38	190	89	329	387	201	243
LT Vol	38	0	89	0	32	201	0
Through Vol	0	124	0	315	228	0	185
RT Vol	0	66	0	14	127	0	58
Lane Flow Rate	58	292	103	383	450	236	286
Geometry Grp	7	7	7	7	6	7	7
Degree of Util (X)	0.162	0.745	0.273	0.963	1.168	0.635	0.721
Departure Headway (Hd)	10.613	9.827	10.123	9.567	9.344	10.347	9.643
Convergence, Y/N	Yes	Yes	Yes	Yes	Yes	Yes	Yes
Cap	340	371	357	383	392	352	377
Service Time	8.313	7.527	7.823	7.267	7.373	8.047	7.343
HCM Lane V/C Ratio	0.171	0.787	0.289	1	1.148	0.67	0.759
HCM Control Delay	15.4	36.3	16.6	68.9	129.9	29.4	33.6
HCM Lane LOS	C	E	C	F	F	D	D
HCM 95th-tile Q	0.6	5.8	1.1	10.8	17.6	4.1	5.5



Movement	EBL	EBT	EBR	WBL	WBT	WBR	NBL	NBT	NBR	SBL	SBT	SBR
Lane Configurations												
Traffic Volume (veh/h)	39	358	184	1	215	182	131	242	3	244	474	44
Future Volume (veh/h)	39	358	184	1	215	182	131	242	3	244	474	44
Initial Q (Qb), veh	0	0	0	0	0	0	0	0	0	0	0	0
Ped-Bike Adj(A_pbT)	0.99		0.96	1.00		0.96	1.00		0.95	1.00		0.96
Parking Bus, Adj	1.00	1.00	1.00	1.00	1.00	1.00	1.00	1.00	1.00	1.00	1.00	1.00
Work Zone On Approach		No			No			No			No	
Adj Sat Flow, veh/h/ln	1870	1870	1870	1870	1870	1870	1870	1870	1870	1870	1870	1870
Adj Flow Rate, veh/h	53	484	249	1	226	192	154	285	4	280	545	51
Peak Hour Factor	0.74	0.74	0.74	0.95	0.95	0.95	0.85	0.85	0.85	0.87	0.87	0.87
Percent Heavy Veh, %	2	2	2	2	2	2	2	2	2	2	2	2
Cap, veh/h	63	440	221	25	393	332	116	530	7	265	624	58
Arrive On Green	0.42	0.42	0.42	0.42	0.42	0.42	0.06	0.29	0.29	0.15	0.37	0.37
Sat Flow, veh/h	85	1042	523	1	929	787	1781	1838	26	1781	1677	157
Grp Volume(v), veh/h	786	0	0	419	0	0	154	0	289	280	0	596
Grp Sat Flow(s),veh/h/ln	1649	0	0	1717	0	0	1781	0	1864	1781	0	1834
Q Serve(g_s), s	33.3	0.0	0.0	0.0	0.0	0.0	9.3	0.0	18.7	21.3	0.0	43.3
Cycle Q Clear(g_c), s	60.5	0.0	0.0	27.2	0.0	0.0	9.3	0.0	18.7	21.3	0.0	43.3
Prop In Lane	0.07		0.32	0.00		0.46	1.00		0.01	1.00		0.09
Lane Grp Cap(c), veh/h	724	0	0	751	0	0	116	0	537	265	0	682
V/C Ratio(X)	1.09	0.00	0.00	0.56	0.00	0.00	1.33	0.00	0.54	1.06	0.00	0.87
Avail Cap(c_a), veh/h	724	0	0	751	0	0	116	0	631	265	0	770
HCM Platoon Ratio	1.00	1.00	1.00	1.00	1.00	1.00	1.00	1.00	1.00	1.00	1.00	1.00
Upstream Filter(I)	1.00	0.00	0.00	1.00	0.00	0.00	1.00	0.00	1.00	1.00	0.00	1.00
Uniform Delay (d), s/veh	42.3	0.0	0.0	31.7	0.0	0.0	66.9	0.0	42.9	60.9	0.0	41.8
Incr Delay (d2), s/veh	59.2	0.0	0.0	0.9	0.0	0.0	196.4	0.0	3.8	71.0	0.0	14.5
Initial Q Delay(d3),s/veh	0.0	0.0	0.0	0.0	0.0	0.0	0.0	0.0	0.0	0.0	0.0	0.0
%ile BackOfQ(50%),veh/ln	37.8	0.0	0.0	11.4	0.0	0.0	10.5	0.0	9.1	14.7	0.0	21.9
Unsig. Movement Delay, s/veh												
LnGrp Delay(d),s/veh	101.4	0.0	0.0	32.7	0.0	0.0	263.3	0.0	46.7	131.9	0.0	56.3
LnGrp LOS	F	A	A	C	A	A	F	A	D	F	A	E
Approach Vol, veh/h		786			419			443			876	
Approach Delay, s/veh		101.4			32.7			122.0			80.5	
Approach LOS		F			C			F			F	

Timer - Assigned Phs	1	2		4	5	6		8
Phs Duration (G+Y+Rc), s	14.0	61.2		68.0	26.0	49.2		68.0
Change Period (Y+Rc), s	* 4.7	7.9		7.5	* 4.7	* 7.9		7.5
Max Green Setting (Gmax), s	* 9.3	60.1		60.5	* 21	* 49		60.5
Max Q Clear Time (g_c+I1), s	11.3	45.3		29.2	23.3	20.7		62.5
Green Ext Time (p_c), s	0.0	8.0		3.1	0.0	5.1		0.0

Intersection Summary	
HCM 6th Ctrl Delay	86.4
HCM 6th LOS	F

Notes

* HCM 6th computational engine requires equal clearance times for the phases crossing the barrier.

Intersection	
Int Delay, s/veh	243.2

Movement	EBL	EBT	EBR	WBL	WBT	WBR	NBL	NBT	NBR	SBL	SBT	SBR
Lane Configurations		↕			↕			↕			↕	
Traffic Vol, veh/h	16	325	265	168	188	39	207	87	130	64	112	12
Future Vol, veh/h	16	325	265	168	188	39	207	87	130	64	112	12
Conflicting Peds, #/hr	10	0	10	10	0	10	10	0	10	10	0	10
Sign Control	Free	Free	Free	Free	Free	Free	Stop	Stop	Stop	Stop	Stop	Stop
RT Channelized	-	-	None	-	-	None	-	-	None	-	-	None
Storage Length	-	-	-	-	-	-	-	-	-	-	-	-
Veh in Median Storage, #	-	0	-	-	0	-	-	0	-	-	0	-
Grade, %	-	0	-	-	0	-	-	0	-	-	0	-
Peak Hour Factor	82	82	82	95	95	95	92	92	92	68	68	68
Heavy Vehicles, %	2	2	2	2	2	2	2	2	2	2	2	2
Mvmt Flow	20	396	323	177	198	41	225	95	141	94	165	18

Major/Minor	Major1			Major2			Minor1			Minor2		
Conflicting Flow All	249	0	0	729	0	0	1282	1211	578	1309	1352	239
Stage 1	-	-	-	-	-	-	608	608	-	583	583	-
Stage 2	-	-	-	-	-	-	674	603	-	726	769	-
Critical Hdwy	4.12	-	-	4.12	-	-	7.12	6.52	6.22	7.12	6.52	6.22
Critical Hdwy Stg 1	-	-	-	-	-	-	6.12	5.52	-	6.12	5.52	-
Critical Hdwy Stg 2	-	-	-	-	-	-	6.12	5.52	-	6.12	5.52	-
Follow-up Hdwy	2.218	-	-	2.218	-	-	3.518	4.018	3.318	3.518	4.018	3.318
Pot Cap-1 Maneuver	1317	-	-	875	-	-	~ 142	182	516	136	~ 150	800
Stage 1	-	-	-	-	-	-	483	486	-	498	499	-
Stage 2	-	-	-	-	-	-	444	488	-	416	411	-
Platoon blocked, %		-	-		-	-						
Mov Cap-1 Maneuver	1304	-	-	867	-	-	-	132	506	~ 33	~ 109	785
Mov Cap-2 Maneuver	-	-	-	-	-	-	-	132	-	~ 33	~ 109	-
Stage 1	-	-	-	-	-	-	466	468	-	480	377	-
Stage 2	-	-	-	-	-	-	~ 185	368	-	231	396	-

Approach	EB	WB	NB	SB
HCM Control Delay, s	0.2	4.3		$ 1657.7
HCM LOS			-	F

Minor Lane/Major Mvmt	NBLn1	EBL	EBT	EBR	WBL	WBT	WBR	SBLn1
Capacity (veh/h)	-	1304	-	-	867	-	-	63
HCM Lane V/C Ratio	-	0.015	-	-	0.204	-	-	4.388
HCM Control Delay (s)	-	7.8	0	-	10.2	0	-	$ 1657.7
HCM Lane LOS	-	A	A	-	B	A	-	F
HCM 95th %tile Q(veh)	-	0	-	-	0.8	-	-	30.1

Notes			
~: Volume exceeds capacity	$: Delay exceeds 300s	+: Computation Not Defined	*: All major volume in platoon

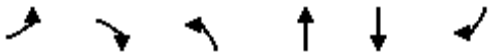

Movement	EBL	EBR	NBL	NBT	SBT	SBR
Lane Configurations						
Traffic Volume (veh/h)	219	304	159	572	747	224
Future Volume (veh/h)	219	304	159	572	747	224
Initial Q (Qb), veh	0	0	0	0	0	0
Ped-Bike Adj(A_pbT)	1.00	1.00	1.00			0.97
Parking Bus, Adj	1.00	1.00	1.00	1.00	1.00	1.00
Work Zone On Approach	No			No	No	
Adj Sat Flow, veh/h/ln	1870	1870	1870	1870	1870	1870
Adj Flow Rate, veh/h	281	313	171	615	803	166
Peak Hour Factor	0.78	0.78	0.93	0.93	0.93	0.93
Percent Heavy Veh, %	2	2	2	2	2	2
Cap, veh/h	312	460	204	1362	864	179
Arrive On Green	0.18	0.18	0.11	0.73	0.58	0.58
Sat Flow, veh/h	1781	1585	1781	1870	1493	309
Grp Volume(v), veh/h	281	313	171	615	0	969
Grp Sat Flow(s),veh/h/ln	1781	1585	1781	1870	0	1802
Q Serve(g_s), s	17.6	19.9	10.7	15.2	0.0	56.0
Cycle Q Clear(g_c), s	17.6	19.9	10.7	15.2	0.0	56.0
Prop In Lane	1.00	1.00	1.00			0.17
Lane Grp Cap(c), veh/h	312	460	204	1362	0	1042
V/C Ratio(X)	0.90	0.68	0.84	0.45	0.00	0.93
Avail Cap(c_a), veh/h	312	460	531	1951	0	1279
HCM Platoon Ratio	1.00	1.00	1.00	1.00	1.00	1.00
Upstream Filter(I)	1.00	1.00	1.00	1.00	0.00	1.00
Uniform Delay (d), s/veh	46.1	35.8	49.4	6.3	0.0	21.9
Incr Delay (d2), s/veh	27.2	4.1	8.7	0.2	0.0	10.6
Initial Q Delay(d3),s/veh	0.0	0.0	0.0	0.0	0.0	0.0
%ile BackOfQ(50%),veh/ln	10.1	17.5	5.2	4.9	0.0	24.1
Unsig. Movement Delay, s/veh						
LnGrp Delay(d),s/veh	73.3	39.9	58.2	6.5	0.0	32.5
LnGrp LOS	E	D	E	A	A	C
Approach Vol, veh/h	594			786	969	
Approach Delay, s/veh	55.7			17.7	32.5	
Approach LOS	E			B	C	

Timer - Assigned Phs		2		4	5	6
Phs Duration (G+Y+Rc), s		89.1		25.0	17.1	72.0
Change Period (Y+Rc), s		6.0		5.0	4.0	6.0
Max Green Setting (Gmax), s		119.0		20.0	34.0	81.0
Max Q Clear Time (g_c+I1), s		17.2		21.9	12.7	58.0
Green Ext Time (p_c), s		4.4		0.0	0.4	8.0

Intersection Summary		
HCM 6th Ctrl Delay		33.4
HCM 6th LOS		C



Movement	WBL	WBR	NBT	NBR	SBL	SBT
Lane Configurations						
Traffic Volume (veh/h)	209	53	621	168	44	762
Future Volume (veh/h)	209	53	621	168	44	762
Initial Q (Qb), veh	0	0	0	0	0	0
Ped-Bike Adj(A_pbT)	1.00	1.00		0.96	1.00	
Parking Bus, Adj	1.00	1.00	1.00	1.00	1.00	1.00
Work Zone On Approach	No		No			No
Adj Sat Flow, veh/h/ln	1870	1870	1870	1870	1870	1870
Adj Flow Rate, veh/h	252	64	682	185	46	802
Peak Hour Factor	0.83	0.83	0.91	0.91	0.95	0.95
Percent Heavy Veh, %	2	2	2	2	2	2
Cap, veh/h	305	339	791	215	76	1244
Arrive On Green	0.17	0.17	0.56	0.56	0.04	0.67
Sat Flow, veh/h	1781	1585	1404	381	1781	1870
Grp Volume(v), veh/h	252	64	0	867	46	802
Grp Sat Flow(s),veh/h/ln	1781	1585	0	1785	1781	1870
Q Serve(g_s), s	9.2	2.2	0.0	27.8	1.7	16.9
Cycle Q Clear(g_c), s	9.2	2.2	0.0	27.8	1.7	16.9
Prop In Lane	1.00	1.00		0.21	1.00	
Lane Grp Cap(c), veh/h	305	339	0	1005	76	1244
V/C Ratio(X)	0.83	0.19	0.00	0.86	0.60	0.64
Avail Cap(c_a), veh/h	397	421	0	2705	476	3446
HCM Platoon Ratio	1.00	1.00	1.00	1.00	1.00	1.00
Upstream Filter(I)	1.00	1.00	0.00	1.00	1.00	1.00
Uniform Delay (d), s/veh	26.9	21.7	0.0	12.5	31.7	6.6
Incr Delay (d2), s/veh	10.6	0.3	0.0	2.3	7.4	0.6
Initial Q Delay(d3),s/veh	0.0	0.0	0.0	0.0	0.0	0.0
%ile BackOfQ(50%),veh/ln	4.6	0.8	0.0	8.8	0.8	4.3
Unsig. Movement Delay, s/veh						
LnGrp Delay(d),s/veh	37.5	21.9	0.0	14.8	39.1	7.2
LnGrp LOS	D	C	A	B	D	A
Approach Vol, veh/h	316		867			848
Approach Delay, s/veh	34.3		14.8			8.9
Approach LOS	C		B			A

Timer - Assigned Phs	1	2				6	8
Phs Duration (G+Y+Rc), s	6.9	43.9				50.8	16.5
Change Period (Y+Rc), s	4.0	6.0				6.0	5.0
Max Green Setting (Gmax), s	18.0	102.0				124.0	15.0
Max Q Clear Time (g_c+I1), s	11.2	29.8				18.9	11.2
Green Ext Time (p_c), s	0.1	8.1				6.7	0.4

Intersection Summary	
HCM 6th Ctrl Delay	15.4
HCM 6th LOS	B



Movement	EBL	EBT	EBR	WBL	WBT	WBR	NBL	NBT	NBR	SBL	SBT	SBR
Lane Configurations												
Traffic Volume (veh/h)	25	175	23	37	200	167	30	6	10	259	28	30
Future Volume (veh/h)	25	175	23	37	200	167	30	6	10	259	28	30
Initial Q (Qb), veh	0	0	0	0	0	0	0	0	0	0	0	0
Ped-Bike Adj(A_pbT)	1.00		0.93	1.00		0.93	0.99		0.98	1.00		0.96
Parking Bus, Adj	1.00	1.00	1.00	1.00	1.00	1.00	1.00	1.00	1.00	1.00	1.00	1.00
Work Zone On Approach		No			No			No			No	
Adj Sat Flow, veh/h/ln	1870	1870	1870	1870	1870	1870	1870	1870	1870	1870	1870	1870
Adj Flow Rate, veh/h	28	199	26	40	215	180	57	11	19	288	31	33
Peak Hour Factor	0.88	0.88	0.88	0.93	0.93	0.93	0.53	0.53	0.53	0.90	0.90	0.90
Percent Heavy Veh, %	2	2	2	2	2	2	2	2	2	2	2	2
Cap, veh/h	34	239	31	49	261	246	503	100	153	766	407	433
Arrive On Green	0.17	0.17	0.17	0.17	0.17	0.17	0.50	0.50	0.50	0.50	0.50	0.50
Sat Flow, veh/h	200	1424	186	291	1565	1473	896	200	306	1373	812	864
Grp Volume(v), veh/h	253	0	0	255	0	180	87	0	0	288	0	64
Grp Sat Flow(s),veh/h/ln	1810	0	0	1856	0	1473	1402	0	0	1373	0	1676
Q Serve(g_s), s	14.8	0.0	0.0	14.6	0.0	12.7	2.3	0.0	0.0	8.9	0.0	2.2
Cycle Q Clear(g_c), s	14.8	0.0	0.0	14.6	0.0	12.7	4.5	0.0	0.0	13.3	0.0	2.2
Prop In Lane	0.11		0.10	0.16		1.00	0.66		0.22	1.00		0.52
Lane Grp Cap(c), veh/h	304	0	0	310	0	246	757	0	0	766	0	840
V/C Ratio(X)	0.83	0.00	0.00	0.82	0.00	0.73	0.11	0.00	0.00	0.38	0.00	0.08
Avail Cap(c_a), veh/h	693	0	0	592	0	470	757	0	0	766	0	840
HCM Platoon Ratio	1.00	1.00	1.00	1.00	1.00	1.00	1.00	1.00	1.00	1.00	1.00	1.00
Upstream Filter(I)	1.00	0.00	0.00	1.00	0.00	1.00	1.00	0.00	0.00	1.00	0.00	1.00
Uniform Delay (d), s/veh	44.2	0.0	0.0	44.1	0.0	43.4	14.8	0.0	0.0	16.8	0.0	14.2
Incr Delay (d2), s/veh	2.3	0.0	0.0	2.1	0.0	1.6	0.3	0.0	0.0	1.4	0.0	0.2
Initial Q Delay(d3),s/veh	0.0	0.0	0.0	0.0	0.0	0.0	0.0	0.0	0.0	0.0	0.0	0.0
%ile BackOfQ(50%),veh/ln	6.8	0.0	0.0	6.7	0.0	4.6	1.2	0.0	0.0	4.7	0.0	0.9
Unsig. Movement Delay, s/veh												
LnGrp Delay(d),s/veh	46.5	0.0	0.0	46.3	0.0	45.0	15.1	0.0	0.0	18.2	0.0	14.4
LnGrp LOS	D	A	A	D	A	D	B	A	A	B	A	B
Approach Vol, veh/h		253			435			87			352	
Approach Delay, s/veh		46.5			45.7			15.1			17.5	
Approach LOS		D			D			B			B	

Timer - Assigned Phs	2	4	6	8
Phs Duration (G+Y+Rc), s	61.0	24.4	61.0	24.3
Change Period (Y+Rc), s	6.0	6.0	6.0	6.0
Max Green Setting (Gmax), s	55.0	42.0	55.0	35.0
Max Q Clear Time (g_c+I1), s	6.5	16.8	15.3	16.6
Green Ext Time (p_c), s	0.1	1.0	3.2	1.1

Intersection Summary	
HCM 6th Ctrl Delay	34.7
HCM 6th LOS	C



Movement	EBL	EBT	EBR	WBL	WBT	WBR	NBL	NBT	NBR	SBL	SBT	SBR
Lane Configurations												
Traffic Volume (veh/h)	77	66	308	5	55	15	223	1137	6	54	1697	124
Future Volume (veh/h)	77	66	308	5	55	15	223	1137	6	54	1697	124
Initial Q (Qb), veh	0	0	0	0	0	0	0	0	0	0	0	0
Ped-Bike Adj(A_pbT)	1.00		0.94	1.00		0.96	1.00		0.96	1.00		0.98
Parking Bus, Adj	1.00	1.00	1.00	1.00	1.00	1.00	1.00	1.00	1.00	1.00	1.00	1.00
Work Zone On Approach		No			No			No			No	
Adj Sat Flow, veh/h/ln	1870	1870	1870	1870	1870	1870	1870	1870	1870	1870	1870	1870
Adj Flow Rate, veh/h	82	70	328	6	70	19	240	1223	6	57	1715	132
Peak Hour Factor	0.94	0.94	0.94	0.79	0.79	0.79	0.93	0.93	0.93	0.94	0.94	0.94
Percent Heavy Veh, %	2	2	2	2	2	2	2	2	2	2	2	2
Cap, veh/h	136	428	829	27	313	254	281	1683	8	124	1608	822
Arrive On Green	0.08	0.23	0.23	0.02	0.17	0.17	0.08	0.46	0.46	0.07	0.45	0.45
Sat Flow, veh/h	1781	1870	2630	1781	1870	1518	3456	3625	18	1781	3554	1548
Grp Volume(v), veh/h	82	70	328	6	70	19	240	599	630	57	1715	132
Grp Sat Flow(s),veh/h/ln	1781	1870	1315	1781	1870	1518	1728	1777	1866	1781	1777	1548
Q Serve(g_s), s	5.5	3.7	12.1	0.4	4.0	1.3	8.4	33.5	33.5	3.8	55.6	5.4
Cycle Q Clear(g_c), s	5.5	3.7	12.1	0.4	4.0	1.3	8.4	33.5	33.5	3.8	55.6	5.4
Prop In Lane	1.00		1.00	1.00		1.00	1.00		0.01	1.00		1.00
Lane Grp Cap(c), veh/h	136	428	829	27	313	254	281	825	866	124	1608	822
V/C Ratio(X)	0.60	0.16	0.40	0.22	0.22	0.07	0.85	0.73	0.73	0.46	1.07	0.16
Avail Cap(c_a), veh/h	161	700	1212	161	700	568	281	825	866	145	1608	822
HCM Platoon Ratio	1.00	1.00	1.00	1.00	1.00	1.00	1.00	1.00	1.00	1.00	1.00	1.00
Upstream Filter(I)	1.00	1.00	1.00	1.00	1.00	1.00	1.00	1.00	1.00	1.00	1.00	1.00
Uniform Delay (d), s/veh	54.9	38.0	33.4	59.8	44.2	43.1	55.7	26.6	26.6	54.9	33.6	14.9
Incr Delay (d2), s/veh	1.9	0.4	0.7	1.5	0.8	0.3	20.7	5.6	5.3	1.0	42.6	0.4
Initial Q Delay(d3),s/veh	0.0	0.0	0.0	0.0	0.0	0.0	0.0	0.0	0.0	0.0	0.0	0.0
%ile BackOfQ(50%),veh/ln	2.5	1.7	3.9	0.2	1.9	0.5	4.3	14.2	14.8	1.7	31.1	2.0
Unsig. Movement Delay, s/veh												
LnGrp Delay(d),s/veh	56.9	38.3	34.0	61.3	45.0	43.4	76.4	32.2	31.9	55.9	76.2	15.3
LnGrp LOS	E	D	C	E	D	D	E	C	C	E	F	B
Approach Vol, veh/h		480			95			1469			1904	
Approach Delay, s/veh		38.6			45.7			39.3			71.4	
Approach LOS		D			D			D			E	

Timer - Assigned Phs	1	2	3	4	5	6	7	8
Phs Duration (G+Y+Rc), s	14.3	65.4	7.6	35.6	15.7	64.0	15.1	28.1
Change Period (Y+Rc), s	* 5.7	* 8.4	* 5.7	7.5	* 5.7	* 8.4	* 5.7	7.5
Max Green Setting (Gmax), s	* 10	* 56	* 11	46.0	* 10	* 56	* 11	46.0
Max Q Clear Time (g_c+I1), s	5.8	35.5	2.4	14.1	10.4	57.6	7.5	6.0
Green Ext Time (p_c), s	0.0	16.2	0.0	3.9	0.0	0.0	0.0	0.9

Intersection Summary	
HCM 6th Ctrl Delay	54.8
HCM 6th LOS	D

Notes

* HCM 6th computational engine requires equal clearance times for the phases crossing the barrier.

Intersection	
Int Delay, s/veh	3.4

Movement	WBL	WBR	NBT	NBR	SBL	SBT
Lane Configurations						
Traffic Vol, veh/h	22	120	258	28	154	505
Future Vol, veh/h	22	120	258	28	154	505
Conflicting Peds, #/hr	10	10	0	10	10	0
Sign Control	Stop	Stop	Free	Free	Free	Free
RT Channelized	-	None	-	None	-	None
Storage Length	0	-	-	-	-	-
Veh in Median Storage, #	0	-	0	-	-	0
Grade, %	0	-	0	-	-	0
Peak Hour Factor	92	92	92	92	92	92
Heavy Vehicles, %	2	2	2	2	2	2
Mvmt Flow	24	130	280	30	167	549

Major/Minor	Minor1		Major1		Major2	
Conflicting Flow All	1198	315	0	0	320	0
Stage 1	305	-	-	-	-	-
Stage 2	893	-	-	-	-	-
Critical Hdwy	6.42	6.22	-	-	4.12	-
Critical Hdwy Stg 1	5.42	-	-	-	-	-
Critical Hdwy Stg 2	5.42	-	-	-	-	-
Follow-up Hdwy	3.518	3.318	-	-	2.218	-
Pot Cap-1 Maneuver	205	725	-	-	1240	-
Stage 1	748	-	-	-	-	-
Stage 2	400	-	-	-	-	-
Platoon blocked, %			-	-		-
Mov Cap-1 Maneuver	162	711	-	-	1228	-
Mov Cap-2 Maneuver	162	-	-	-	-	-
Stage 1	741	-	-	-	-	-
Stage 2	318	-	-	-	-	-

Approach	WB	NB	SB
HCM Control Delay, s	16.5	0	2
HCM LOS	C		

Minor Lane/Major Mvmt	NBT	NBR	WBLn1	SBL	SBT
Capacity (veh/h)	-	-	466	1228	-
HCM Lane V/C Ratio	-	-	0.331	0.136	-
HCM Control Delay (s)	-	-	16.5	8.4	0
HCM Lane LOS	-	-	C	A	A
HCM 95th %tile Q(veh)	-	-	1.4	0.5	-

Intersection	
Int Delay, s/veh	20.4

Movement	EBL	EBR	NBL	NBT	SBT	SBR
Lane Configurations						
Traffic Vol, veh/h	65	43	56	666	967	84
Future Vol, veh/h	65	43	56	666	967	84
Conflicting Peds, #/hr	10	10	10	0	0	10
Sign Control	Stop	Stop	Free	Free	Free	Free
RT Channelized	-	None	-	None	-	None
Storage Length	0	-	-	-	-	-
Veh in Median Storage, #	0	-	-	0	0	-
Grade, %	0	-	-	0	0	-
Peak Hour Factor	92	92	92	92	92	92
Heavy Vehicles, %	2	2	2	2	2	2
Mvmt Flow	71	47	61	724	1051	91

Major/Minor	Minor2		Major1		Major2	
Conflicting Flow All	1963	1117	1152	0	-	0
Stage 1	1107	-	-	-	-	-
Stage 2	856	-	-	-	-	-
Critical Hdwy	6.42	6.22	4.12	-	-	-
Critical Hdwy Stg 1	5.42	-	-	-	-	-
Critical Hdwy Stg 2	5.42	-	-	-	-	-
Follow-up Hdwy	3.518	3.318	2.218	-	-	-
Pot Cap-1 Maneuver	~ 69	252	606	-	-	-
Stage 1	316	-	-	-	-	-
Stage 2	416	-	-	-	-	-
Platoon blocked, %				-	-	-
Mov Cap-1 Maneuver	~ 56	247	600	-	-	-
Mov Cap-2 Maneuver	~ 56	-	-	-	-	-
Stage 1	260	-	-	-	-	-
Stage 2	412	-	-	-	-	-

Approach	EB	NB	SB
HCM Control Delay, s	$ 348.5	0.9	0
HCM LOS	F		

Minor Lane/Major Mvmt	NBL	NBT	EBLn1	SBT	SBR
Capacity (veh/h)	600	-	81	-	-
HCM Lane V/C Ratio	0.101	-	1.449	-	-
HCM Control Delay (s)	11.7	0	$ 348.5	-	-
HCM Lane LOS	B	A	F	-	-
HCM 95th %tile Q(veh)	0.3	-	9.3	-	-

Notes			
~: Volume exceeds capacity	$: Delay exceeds 300s	+: Computation Not Defined	*: All major volume in platoon

Intersection	
Int Delay, s/veh	3.7

Movement	WBL	WBR	NBT	NBR	SBL	SBT
Lane Configurations						
Traffic Vol, veh/h	33	109	177	42	140	387
Future Vol, veh/h	33	109	177	42	140	387
Conflicting Peds, #/hr	10	10	0	10	10	0
Sign Control	Stop	Stop	Free	Free	Free	Free
RT Channelized	-	None	-	None	-	None
Storage Length	0	-	-	-	-	-
Veh in Median Storage, #	0	-	0	-	-	0
Grade, %	0	-	0	-	-	0
Peak Hour Factor	92	92	92	92	92	92
Heavy Vehicles, %	2	2	2	2	2	2
Mvmt Flow	36	118	192	46	152	421

Major/Minor	Minor1		Major1		Major2	
Conflicting Flow All	960	235	0	0	248	0
Stage 1	225	-	-	-	-	-
Stage 2	735	-	-	-	-	-
Critical Hdwy	6.42	6.22	-	-	4.12	-
Critical Hdwy Stg 1	5.42	-	-	-	-	-
Critical Hdwy Stg 2	5.42	-	-	-	-	-
Follow-up Hdwy	3.518	3.318	-	-	2.218	-
Pot Cap-1 Maneuver	285	804	-	-	1318	-
Stage 1	812	-	-	-	-	-
Stage 2	474	-	-	-	-	-
Platoon blocked, %			-	-		-
Mov Cap-1 Maneuver	237	789	-	-	1305	-
Mov Cap-2 Maneuver	237	-	-	-	-	-
Stage 1	804	-	-	-	-	-
Stage 2	398	-	-	-	-	-

Approach	WB	NB	SB
HCM Control Delay, s	15	0	2.2
HCM LOS	C		

Minor Lane/Major Mvmt	NBT	NBR	WBLn1	SBL	SBT
Capacity (veh/h)	-	-	512	1305	-
HCM Lane V/C Ratio	-	-	0.301	0.117	-
HCM Control Delay (s)	-	-	15	8.1	0
HCM Lane LOS	-	-	C	A	A
HCM 95th %tile Q(veh)	-	-	1.3	0.4	-

Intersection	
Int Delay, s/veh	12.5

Movement	EBL	EBR	NBL	NBT	SBT	SBR
Lane Configurations						
Traffic Vol, veh/h	54	43	55	667	940	70
Future Vol, veh/h	54	43	55	667	940	70
Conflicting Peds, #/hr	10	10	10	0	0	10
Sign Control	Stop	Stop	Free	Free	Free	Free
RT Channelized	-	None	-	None	-	None
Storage Length	0	-	-	-	-	-
Veh in Median Storage, #	0	-	-	0	0	-
Grade, %	0	-	-	0	0	-
Peak Hour Factor	92	92	92	92	92	92
Heavy Vehicles, %	2	2	2	2	2	2
Mvmt Flow	59	47	60	725	1022	76

Major/Minor	Minor2		Major1		Major2	
Conflicting Flow All	1925	1080	1108	0	-	0
Stage 1	1070	-	-	-	-	-
Stage 2	855	-	-	-	-	-
Critical Hdwy	6.42	6.22	4.12	-	-	-
Critical Hdwy Stg 1	5.42	-	-	-	-	-
Critical Hdwy Stg 2	5.42	-	-	-	-	-
Follow-up Hdwy	3.518	3.318	2.218	-	-	-
Pot Cap-1 Maneuver	73	265	630	-	-	-
Stage 1	329	-	-	-	-	-
Stage 2	417	-	-	-	-	-
Platoon blocked, %				-	-	-
Mov Cap-1 Maneuver	60	260	624	-	-	-
Mov Cap-2 Maneuver	60	-	-	-	-	-
Stage 1	273	-	-	-	-	-
Stage 2	413	-	-	-	-	-

Approach	EB	NB	SB
HCM Control Delay, s	228.2	0.9	0
HCM LOS	F		

Minor Lane/Major Mvmt	NBL	NBT	EBLn1	SBT	SBR
Capacity (veh/h)	624	-	91	-	-
HCM Lane V/C Ratio	0.096	-	1.159	-	-
HCM Control Delay (s)	11.4	0	228.2	-	-
HCM Lane LOS	B	A	F	-	-
HCM 95th %tile Q(veh)	0.3	-	7.3	-	-

Intersection	
Int Delay, s/veh	49.8

Movement	EBL	EBR	NBL	NBT	SBT	SBR
Lane Configurations						
Traffic Vol, veh/h	74	98	125	702	896	89
Future Vol, veh/h	74	98	125	702	896	89
Conflicting Peds, #/hr	10	10	10	0	0	10
Sign Control	Stop	Stop	Free	Free	Free	Free
RT Channelized	-	None	-	None	-	None
Storage Length	0	-	410	-	-	80
Veh in Median Storage, #	0	-	-	0	0	-
Grade, %	0	-	-	0	0	-
Peak Hour Factor	92	92	92	92	92	92
Heavy Vehicles, %	2	2	2	2	2	2
Mvmt Flow	80	107	136	763	974	97

Major/Minor	Minor2		Major1		Major2	
Conflicting Flow All	2029	994	1081	0	-	0
Stage 1	984	-	-	-	-	-
Stage 2	1045	-	-	-	-	-
Critical Hdwy	6.42	6.22	4.12	-	-	-
Critical Hdwy Stg 1	5.42	-	-	-	-	-
Critical Hdwy Stg 2	5.42	-	-	-	-	-
Follow-up Hdwy	3.518	3.318	2.218	-	-	-
Pot Cap-1 Maneuver	~ 63	297	645	-	-	-
Stage 1	362	-	-	-	-	-
Stage 2	339	-	-	-	-	-
Platoon blocked, %				-	-	-
Mov Cap-1 Maneuver	~ 49	291	639	-	-	-
Mov Cap-2 Maneuver	~ 49	-	-	-	-	-
Stage 1	282	-	-	-	-	-
Stage 2	336	-	-	-	-	-

Approach	EB	NB	SB
HCM Control Delay, s	$ 565.5	1.8	0
HCM LOS	F		

Minor Lane/Major Mvmt	NBL	NBT	EBLn1	SBT	SBR
Capacity (veh/h)	639	-	93	-	-
HCM Lane V/C Ratio	0.213	-	2.01	-	-
HCM Control Delay (s)	12.1	-	-$ 565.5	-	-
HCM Lane LOS	B	-	F	-	-
HCM 95th %tile Q(veh)	0.8	-	16.1	-	-

Notes			
~: Volume exceeds capacity	$: Delay exceeds 300s	+: Computation Not Defined	*: All major volume in platoon

Intersection	
Int Delay, s/veh	3.9

Movement	EBL	EBT	WBT	WBR	SBL	SBR
Lane Configurations						
Traffic Vol, veh/h	0	0	0	42	33	0
Future Vol, veh/h	0	0	0	42	33	0
Conflicting Peds, #/hr	10	0	0	10	10	10
Sign Control	Free	Free	Free	Free	Stop	Stop
RT Channelized	-	None	-	None	-	None
Storage Length	-	-	-	-	0	-
Veh in Median Storage, #	-	0	0	-	0	-
Grade, %	-	0	0	-	0	-
Peak Hour Factor	92	92	92	92	92	92
Heavy Vehicles, %	2	2	2	2	2	2
Mvmt Flow	0	0	0	46	36	0

Major/Minor	Major1		Major2		Minor2	
Conflicting Flow All	56	0	-	0	43	43
Stage 1	-	-	-	-	33	-
Stage 2	-	-	-	-	10	-
Critical Hdwy	4.12	-	-	-	6.42	6.22
Critical Hdwy Stg 1	-	-	-	-	5.42	-
Critical Hdwy Stg 2	-	-	-	-	5.42	-
Follow-up Hdwy	2.218	-	-	-	3.518	3.318
Pot Cap-1 Maneuver	1549	-	-	-	968	1027
Stage 1	-	-	-	-	989	-
Stage 2	-	-	-	-	1013	-
Platoon blocked, %		-	-	-		
Mov Cap-1 Maneuver	1534	-	-	-	949	1008
Mov Cap-2 Maneuver	-	-	-	-	949	-
Stage 1	-	-	-	-	979	-
Stage 2	-	-	-	-	1003	-

Approach	EB	WB	SB
HCM Control Delay, s	0	0	8.9
HCM LOS			A

Minor Lane/Major Mvmt	EBL	EBT	WBT	WBR	SBLn1
Capacity (veh/h)	1534	-	-	-	949
HCM Lane V/C Ratio	-	-	-	-	0.038
HCM Control Delay (s)	0	-	-	-	8.9
HCM Lane LOS	A	-	-	-	A
HCM 95th %tile Q(veh)	0	-	-	-	0.1

Intersection	
Int Delay, s/veh	2.3

Movement	EBL	EBT	WBT	WBR	SBL	SBR
Lane Configurations						
Traffic Vol, veh/h	0	33	42	56	43	0
Future Vol, veh/h	0	33	42	56	43	0
Conflicting Peds, #/hr	10	0	0	10	10	10
Sign Control	Free	Free	Free	Free	Stop	Stop
RT Channelized	-	None	-	None	-	None
Storage Length	-	-	-	-	0	-
Veh in Median Storage, #	-	0	0	-	0	-
Grade, %	-	0	0	-	0	-
Peak Hour Factor	92	92	92	92	92	92
Heavy Vehicles, %	2	2	2	2	2	2
Mvmt Flow	0	36	46	61	47	0

Major/Minor	Major1		Major2		Minor2	
Conflicting Flow All	117	0	-	0	133	97
Stage 1	-	-	-	-	87	-
Stage 2	-	-	-	-	46	-
Critical Hdwy	4.12	-	-	-	6.42	6.22
Critical Hdwy Stg 1	-	-	-	-	5.42	-
Critical Hdwy Stg 2	-	-	-	-	5.42	-
Follow-up Hdwy	2.218	-	-	-	3.518	3.318
Pot Cap-1 Maneuver	1471	-	-	-	861	959
Stage 1	-	-	-	-	936	-
Stage 2	-	-	-	-	976	-
Platoon blocked, %		-	-	-		
Mov Cap-1 Maneuver	1457	-	-	-	844	941
Mov Cap-2 Maneuver	-	-	-	-	844	-
Stage 1	-	-	-	-	927	-
Stage 2	-	-	-	-	966	-

Approach	EB	WB	SB
HCM Control Delay, s	0	0	9.5
HCM LOS			A

Minor Lane/Major Mvmt	EBL	EBT	WBT	WBR	SBLn1
Capacity (veh/h)	1457	-	-	-	844
HCM Lane V/C Ratio	-	-	-	-	0.055
HCM Control Delay (s)	0	-	-	-	9.5
HCM Lane LOS	A	-	-	-	A
HCM 95th %tile Q(veh)	0	-	-	-	0.2

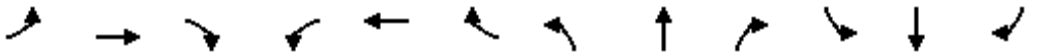

Movement	EBL	EBT	EBR	WBL	WBT	WBR	NBL	NBT	NBR	SBL	SBT	SBR
Lane Configurations												
Traffic Volume (veh/h)	127	59	77	56	73	153	96	460	23	192	477	150
Future Volume (veh/h)	127	59	77	56	73	153	96	460	23	192	477	150
Initial Q (Qb), veh	0	0	0	0	0	0	0	0	0	0	0	0
Ped-Bike Adj(A_pbT)	1.00		0.97	1.00		0.94	1.00		0.97	1.00		0.97
Parking Bus, Adj	1.00	1.00	1.00	1.00	1.00	1.00	1.00	1.00	1.00	1.00	1.00	1.00
Work Zone On Approach		No			No			No			No	
Adj Sat Flow, veh/h/ln	1870	1870	1870	1870	1870	1870	1870	1870	1870	1870	1870	1870
Adj Flow Rate, veh/h	172	80	104	84	109	228	113	541	27	202	502	158
Peak Hour Factor	0.74	0.74	0.74	0.67	0.67	0.67	0.85	0.85	0.85	0.95	0.95	0.95
Percent Heavy Veh, %	2	2	2	2	2	2	2	2	2	2	2	2
Cap, veh/h	206	427	350	185	405	323	215	606	30	237	941	294
Arrive On Green	0.12	0.23	0.23	0.10	0.22	0.22	0.12	0.34	0.34	0.13	0.36	0.36
Sat Flow, veh/h	1781	1870	1531	1781	1870	1491	1781	1764	88	1781	2645	827
Grp Volume(v), veh/h	172	80	104	84	109	228	113	0	568	202	336	324
Grp Sat Flow(s),veh/h/ln	1781	1870	1531	1781	1870	1491	1781	0	1852	1781	1777	1695
Q Serve(g_s), s	8.9	3.2	5.3	4.2	4.6	13.3	5.6	0.0	27.4	10.4	14.2	14.3
Cycle Q Clear(g_c), s	8.9	3.2	5.3	4.2	4.6	13.3	5.6	0.0	27.4	10.4	14.2	14.3
Prop In Lane	1.00		1.00	1.00		1.00	1.00		0.05	1.00		0.49
Lane Grp Cap(c), veh/h	206	427	350	185	405	323	215	0	636	237	632	603
V/C Ratio(X)	0.84	0.19	0.30	0.45	0.27	0.71	0.53	0.00	0.89	0.85	0.53	0.54
Avail Cap(c_a), veh/h	284	695	569	208	616	491	227	0	747	340	830	792
HCM Platoon Ratio	1.00	1.00	1.00	1.00	1.00	1.00	1.00	1.00	1.00	1.00	1.00	1.00
Upstream Filter(I)	1.00	1.00	1.00	1.00	1.00	1.00	1.00	0.00	1.00	1.00	1.00	1.00
Uniform Delay (d), s/veh	40.8	29.3	30.1	39.7	30.7	34.1	38.9	0.0	29.3	39.9	24.1	24.2
Incr Delay (d2), s/veh	10.7	0.3	0.7	0.6	0.5	4.0	0.7	0.0	12.5	9.7	1.0	1.1
Initial Q Delay(d3),s/veh	0.0	0.0	0.0	0.0	0.0	0.0	0.0	0.0	0.0	0.0	0.0	0.0
%ile BackOfQ(50%),veh/ln	4.5	1.5	2.0	1.8	2.1	5.1	2.4	0.0	13.5	5.1	5.9	5.7
Unsig. Movement Delay, s/veh												
LnGrp Delay(d),s/veh	51.5	29.6	30.7	40.3	31.2	38.1	39.6	0.0	41.7	49.6	25.1	25.2
LnGrp LOS	D	C	C	D	C	D	D	A	D	D	C	C
Approach Vol, veh/h		356			421			681			862	
Approach Delay, s/veh		40.5			36.7			41.4			30.9	
Approach LOS		D			D			D			C	

Timer - Assigned Phs	1	2	3	4	5	6	7	8
Phs Duration (G+Y+Rc), s	16.5	38.4	13.8	25.5	15.4	39.5	14.9	24.4
Change Period (Y+Rc), s	4.0	6.0	4.0	4.0	4.0	6.0	4.0	4.0
Max Green Setting (Gmax), s	18.0	38.0	11.0	35.0	12.0	44.0	15.0	31.0
Max Q Clear Time (g_c+I1), s	12.4	29.4	6.2	7.3	7.6	16.3	10.9	15.3
Green Ext Time (p_c), s	0.1	3.0	0.0	1.2	0.0	6.2	0.1	1.9

Intersection Summary	
HCM 6th Ctrl Delay	36.5
HCM 6th LOS	D

Intersection	
Intersection Delay, s/veh	188.9
Intersection LOS	F

Movement	EBL	EBT	EBR	WBL	WBT	WBR	NBL	NBT	NBR	SBL	SBT	SBR
Lane Configurations												
Traffic Vol, veh/h	25	223	278	16	135	294	125	294	18	280	358	17
Future Vol, veh/h	25	223	278	16	135	294	125	294	18	280	358	17
Peak Hour Factor	0.83	0.83	0.83	0.90	0.90	0.90	0.89	0.89	0.89	0.91	0.91	0.91
Heavy Vehicles, %	2	2	2	2	2	2	2	2	2	2	2	2
Mvmt Flow	30	269	335	18	150	327	140	330	20	308	393	19
Number of Lanes	0	1	1	0	1	1	0	1	0	0	1	0

Approach	EB	WB	NB	SB
Opposing Approach	WB	EB	SB	NB
Opposing Lanes	2	2	1	1
Conflicting Approach Left	SB	NB	EB	WB
Conflicting Lanes Left	1	1	2	2
Conflicting Approach Right	NB	SB	WB	EB
Conflicting Lanes Right	1	1	2	2
HCM Control Delay	48.4	40.5	176	423.3
HCM LOS	E	E	F	F

Lane	NBLn1	EBLn1	EBLn2	WBLn1	WBLn2	SBLn1
Vol Left, %	29%	10%	0%	11%	0%	43%
Vol Thru, %	67%	90%	0%	89%	0%	55%
Vol Right, %	4%	0%	100%	0%	100%	3%
Sign Control	Stop	Stop	Stop	Stop	Stop	Stop
Traffic Vol by Lane	437	248	278	151	294	655
LT Vol	125	25	0	16	0	280
Through Vol	294	223	0	135	0	358
RT Vol	18	0	278	0	294	17
Lane Flow Rate	491	299	335	168	327	720
Geometry Grp	2	7	7	7	7	2
Degree of Util (X)	1.267	0.788	0.814	0.45	0.808	1.865
Departure Headway (Hd)	11.649	12.05	11.246	12.257	11.45	10.194
Convergence, Y/N	Yes	Yes	Yes	Yes	Yes	Yes
Cap	314	302	325	297	320	367
Service Time	9.649	9.75	8.946	9.957	9.15	8.194
HCM Lane V/C Ratio	1.564	0.99	1.031	0.566	1.022	1.962
HCM Control Delay	176	48	48.7	24.6	48.6	423.3
HCM Lane LOS	F	E	E	C	E	F
HCM 95th-tile Q	18.3	6.2	6.8	2.2	6.7	43.8

Intersection	
Intersection Delay, s/veh	7.9
Intersection LOS	A

Approach	EB	WB	NB	SB
Entry Lanes	1	1	1	1
Conflicting Circle Lanes	1	1	1	1
Adj Approach Flow, veh/h	529	496	72	240
Demand Flow Rate, veh/h	540	505	74	245
Vehicles Circulating, veh/h	243	76	691	477
Vehicles Exiting, veh/h	479	689	92	104
Ped Vol Crossing Leg, #/h	10	10	10	10
Ped Cap Adj	0.999	0.999	0.999	0.999
Approach Delay, s/veh	9.3	6.7	6.6	7.5
Approach LOS	A	A	A	A

Lane	Left	Left	Left	Left
Designated Moves	LTR	LTR	LTR	LTR
Assumed Moves	LTR	LTR	LTR	LTR
RT Channelized				
Lane Util	1.000	1.000	1.000	1.000
Follow-Up Headway, s	2.609	2.609	2.609	2.609
Critical Headway, s	4.976	4.976	4.976	4.976
Entry Flow, veh/h	540	505	74	245
Cap Entry Lane, veh/h	1077	1277	682	848
Entry HV Adj Factor	0.980	0.981	0.978	0.979
Flow Entry, veh/h	529	496	72	240
Cap Entry, veh/h	1054	1251	666	830
V/C Ratio	0.502	0.396	0.109	0.289
Control Delay, s/veh	9.3	6.7	6.6	7.5
LOS	A	A	A	A
95th %tile Queue, veh	3	2	0	1

This page intentionally left blank.