FINAL

Environmental Impact Report

Phelan 20 Project

State Clearinghouse No. 2024020980

FEBRUARY 2026

Prepared for:

CITY OF HESPERIA
9700 Seventh Avenue
Hesperia, California 92345
Contact: Leilani Henry
760.947.1231

Prepared by:

DUDEK

687 S. Coast Highway 101, Suite 101
Encinitas, California 92024
Contact: Chelsea Ohanesian
760.479.4863

Table of Contents

SECTION **PAGE NO.**

1 Introduction 1-1
1.1 Introduction 1-1
1.2 Contents and Organization 1-3
1.3 California Environmental Quality Act Review 1-3

2 Changes to the Draft Environmental Impact Report 2-1
2.1 Introduction 2-1
2.2 Global Edits 2-1
2.3 Figure Edits 2-1
2.3.1 Figure 3-15, Architectural Elevation 2-1
2.4 Changes to the Draft Environmental Impact Report 2-2
2.4.1 Chapter 3, Project Description 2-2
2.4.2 Section 4.1, Aesthetics 2-2
2.4.3 Chapter 5, Effects Found Not to be Significant 2-6

3 Response to Comments 3-1
Response to Comment Letter 1 3-3
Response to Comment Letter 2 3-5
Response to Comment Letter 3 3-7
Response to Comment Letter 4 3-9
Response to Comment Letter 5 3-13
Response to Comment Letter 6 3-21
References 3-23

4 Mitigation Monitoring and Reporting Program 4-1
4.1 Introduction 4-1
4.2 Mitigation Monitoring and Reporting Program Table 4-2

TABLE

3-1 Comments Received on the Draft EIR 3-1

APPENDICES

A Comment Letters
B Architectural Elevations
C Traffic Impact Analysis Technical Memorandum
I Transportation Technical Memo

INTENTIONALLY LEFT BLANK

1 Introduction

1.1 Introduction

This Final Environmental Impact Report (EIR) was prepared for the Phelan 20 Project (Project) in accordance with the California Environmental Quality Act (CEQA) (California Public Resources Code Sections 21000-21177).

Project Overview

The Project would include construction of an industrial warehouse building and associated improvements on 19.2 acres of vacant land. The net acreage of 19.2 acres represents the total site acreage minus the required setbacks from the centerlines of the adjacent roadways. The Project would provide 419,840 square feet of industrial/warehouse space and include associated improvements, such as loading docks, tractor-trailer stalls, passenger vehicle parking spaces, stormwater detention basins, and landscape area. The Project would also include 5,000 square feet of office space. The building would have a maximum height of 50 feet, measured from the finished floor to the top of the building parapets, and would have a gross floor area ratio of 47.7% and a net floor area ratio of 53.1%. The Project would include off-site improvements along Phelan Road, including frontage landscaping and pedestrian improvements. A variety of trees, shrubs, plants, and land covers would be planted within the Project frontage's landscape setback area, as well as within the landscape areas found around the proposed industrial/warehouse buildings and throughout the Project site. Phelan Road would be widened along the Project frontage. New Caliente Road would extend south from Phelan Road. A detailed description of the Project is contained in the Draft EIR in Chapter 3, Project Description. As described below, the Draft EIR is incorporated herein as part of the Final EIR but provided under a separate cover.

Contents and Use of a Final EIR

As described in CEQA and the CEQA Guidelines, public agencies are charged with the duty to avoid or substantially lessen significant environmental effects, with consideration of other conditions, including economic, social, technological, legal, and other benefits. As required by CEQA, this Final EIR assesses the significant direct and indirect environmental effects of the Project, as well as the significant cumulative impacts that could occur from implementation of the Project. This Final EIR is an informational document only, the purpose of which is to identify the significant effects of the Project on the environment; to indicate how those significant effects could be avoided or significantly lessened, including feasible mitigation measures; to identify any significant and unavoidable adverse impacts that cannot be mitigated to less than significant; and to identify reasonable and feasible alternatives to the Project that would avoid or substantially lessen any significant adverse environmental effects associated with the Project and achieve the fundamental objectives of the Project.

Before approving a project, CEQA requires the lead agency to prepare and certify a Final EIR. The contents of a Final EIR are specified in Section 15132 of the CEQA Guidelines, as follows:

1. The draft EIR or a revision of the draft.
2. Comments and recommendations received on the draft EIR either verbatim or in summary.
3. A list of persons, organizations, and public agencies commenting on the draft EIR.

4. The responses of the Lead Agency to significant environmental points raised in the review and consultation process.
5. Any other information added by the Lead Agency.

In accordance with the above-listed requirements, this Final EIR for the Project incorporates the publicly circulated Draft EIR, which is provided under a separate cover, and consists of the following:

1. All agency and public comments received during the public review comment period for the Project.
2. Responses to public comments.
3. Changes to the Draft EIR since it was circulated for public review.
4. The Project's Mitigation Monitoring and Reporting Program.

This Final EIR, in combination with the Draft EIR, as amended by text changes, constitute the EIR that will be considered for certification by the City and may be used to support approval of the proposed Project, either in whole or in part, or one of the alternatives to the Project discussed in the Draft EIR.

As required by Section 15090 (a) (1)-(3) of the CEQA Guidelines, a lead agency, in certifying a Final EIR, must make the following three determinations:

1. The Final EIR has been completed in compliance with CEQA.
2. The Final EIR was presented to the decision-making body of the lead agency, and the decision-making body reviewed and considered the information in the Final EIR prior to approving the project.
3. The Final EIR reflects the lead agency's independent judgment and analysis.

As required by Section 15091 of the CEQA Guidelines, no public agency can approve or carry out a project for which an EIR has been certified that identifies one or more significant environmental effects of the project unless the public agency makes one or more written findings (Findings of Fact) for each of those significant effects, accompanied by a brief explanation of the rationale for each finding, supported by substantial evidence in the record. The possible findings are as follows:

1. Changes or alterations have been required in or incorporated into the project which avoid or substantially lessen the significant environmental effect as identified in the Final EIR.
2. Such changes or alterations are within the responsibility and jurisdiction of another public agency and not the agency making the finding. Such changes have been adopted by such other agency or can and should be adopted by such other agency.
3. Specific economic, legal, social, technological, or other considerations, including provision of employment opportunities for highly trained workers, make infeasible the mitigation measures or project alternatives identified in the Final EIR.

Additionally, pursuant to Section 15093(b) of the CEQA Guidelines, when a lead agency approves a project that would result in significant unavoidable impacts that are disclosed in the Final EIR, the agency must state in writing the reasons supporting the action. The Statement of Overriding Considerations must be supported by substantial evidence in the lead agency's administrative record.

The Draft Findings of Fact and Statement of Overriding Considerations are provided as a separate document that may be considered for adoption by the City at the time at which the Project is considered.

1.2 Contents and Organization

The Final EIR will be used by the City as an informational document for the proposed Project. The Final EIR, in compliance with Section 15132 of the CEQA Guidelines, is organized as follows:

Chapter 1, Introduction. This chapter provides general information on, and the procedural compliance of, the proposed Project and the Final EIR.

Chapter 2, Changes to the Draft Environmental Impact Report. This chapter contains a summary of changes made to the document since publication of the Draft EIR as a result of comments received. Revisions clarify information presented in the Draft EIR, and only minor technical changes or additions have been made. These text changes provide additional clarity in response to comments received on the Draft EIR, but do not change the significance of the conclusions presented in the Draft EIR. Changes are signified by strikeout text (i.e., ~~strikeout~~) where text was removed and by underlined text (i.e., underline) where text was added.

Chapter 3, Response to Comments. This chapter includes a list of public agencies and individuals who provided comments on the Draft EIR during the public review period. Appendix A includes the comments received on environmental issues raised during the public review process for the Draft EIR and the City's responses to these comments are in Chapter 3. Each comment letter is numbered and presented with brackets indicating how the letter has been divided into individual comments. Each comment is given a binomial with the number of the comment letter appearing first, followed by the comment number. For example, comments in Letter 1 are numbered 1-1, 1-2, 1-3, and so on. Responses to specific comments are included in Chapter 3 of this Final EIR, each with binomials that correspond to the bracketed comments.

Chapter 4, Mitigation Monitoring and Reporting Program. This chapter provides the Mitigation Monitoring and Reporting Program for the proposed Project. The Mitigation Monitoring and Reporting Program is presented in table format and identifies mitigation measures for the proposed Project, the party responsible for implementing the mitigation measures, the timing of implementing the mitigation measures, and the monitoring and reporting procedures for each mitigation measure. Project design features that were identified in the EIR are also included in this chapter to verify that these features are incorporated within the Project.

Draft EIR (Under Separate Cover). This Final EIR incorporates the Draft EIR as circulated during public review. The Draft EIR includes a detailed description of the Project, an analysis of the Project's environmental impacts, and a discussion of alternatives to the Project. The Draft EIR is available for review on the City's website at https://www.applevalley.org/services/planning-division/environmental. Copies of the Draft EIR are also available for public review at the following locations:

City of Hesperia Planning Department
9700 Seventh Avenue
Hesperia, California 92345

1.3 California Environmental Quality Act Review

In accordance with Section 15082 of the CEQA Guidelines, the City released an Initial Study and Notice of Preparation on February 26, 2024, for the required 30-day review period to interested agencies, organizations, and individuals. The purpose of the Notice of Preparation is to provide notification that an EIR for the Project was being prepared, and to solicit guidance on the scope and content of the document. The Notice of Preparation was sent to the State Clearinghouse at the California Governor's Office of Planning and Research. The State Clearinghouse assigned a

state identification number (SCH No. 2024020980) to the Project. The Notice of Preparation was also posted at the County Clerk's office and on the City's website at https://www.hesperiaca.gov/1466/Environmental-Review-Documents. Copies of the Notice of Preparation were distributed to all applicable agencies and tribes on the City's noticing list, as well as surrounding property owners within 900 feet of the Project site. Hard copies of the Initial Study and Notice of Preparation were made available for review at both the City's Planning Department, located at 9700 Seventh Avenue, Hesperia, California 92345. A public scoping meeting was held on March 14, 2024, at Hesperia City Hall to gather additional public input on the scope of the environmental document. During the scoping meeting, the City did not receive any substantive comments on the scope of the environmental analysis to be included in the Draft EIR.

The 30-day public scoping period ended on March 27, 2024. Comments received during the 30-day public scoping period were considered during preparation of the Draft EIR. Copies of the comment letters received in 2024 are provided in Appendix A of the Draft EIR, and included comments from the following:

- Native American Heritage Commission
- Mojave Desert Air Quality Management District
- Department of Justice
- Center for Biological Diversity

Comments focused on potential impacts and issues related to the air quality, biological resources, and greenhouse gas emissions. Issues, concerns, and potential impacts raised in comment letters received during the 2024 public scoping period were discussed and addressed in the Draft EIR, and no further response to these comments is needed in this Final EIR.

A Notice of Availability of the Draft EIR was sent to agencies and interested parties on June 11, 2023, and the Draft EIR was circulated for a public review period from June 13, 2025, through August 1, 2025. The Notice of Availability was also posted at the County Clerk's office and both the Notice of Availability and Draft EIR were posted on the City's website at https://www.hesperiaca.gov/1466/Environmental-Review-Documents. Copies of the Notice of Availability were distributed to all applicable agencies and tribes on the City's noticing list, as well as surrounding property owners within 900 feet of the Project site. Hard copies of the Draft EIR were made available for review at both the City's Planning Department, located at 9700 Seventh Avenue, Hesperia, California 92345, and at the Hesperia Branch Library, located at 9650 Seventh Avenue, Hesperia, California 92345.

The City received six comment letters during the 2025 Draft EIR public review period. A list of the comments received and responses to comments are included in Chapter 3 of this Final EIR. Appendix A contains copies of the comment letters received.

Per CEQA Guidelines Section 15088, responses to comments submitted by public agencies are required to be provided to the commenting agency at least 10 days prior to the public hearing at which the EIR and Project will be considered. Notwithstanding, the City has distributed a NOA of a Final EIR to all parties that were previously provided a NOA of the Draft EIR, as well as parties that commented on the Draft EIR. The City has also posted this Final EIR on the City's website. Hard copies of the Final EIR were made available for review at the City's Planning Department, located at 9700 Seventh Avenue, Hesperia, California 92345.

2 Changes to the Draft Environmental Impact Report

2.1 Introduction

As provided in Section 15088(c) of the CEQA Guidelines, responses to comments may take the form of a revision to a Draft EIR or may be a separate section in the Final EIR. This chapter complies with the latter option and provides changes to the Draft EIR in this chapter shown as strikethrough text (i.e., ~~strikethrough~~) signifying deletions and underlined text (i.e., underline) signifying additions. These changes are meant to provide clarification, corrections, or minor revisions made to the Draft EIR initiated by the Lead Agency, City of Hesperia, reviewing agencies, the public, and/or consultants based on their review. Text changes are presented in the section and page order in which they appear in the Draft EIR. None of the corrections or additions constitutes significant new information or substantial project changes that, in accordance with CEQA Guidelines Section 15088.5, would trigger the need to recirculate portions or all of the Draft EIR.

2.2 Global Edits

Several minor corrections have been made in the Draft EIR that appear numerous times throughout the document. These corrections are described once below and are applicable throughout the Draft EIR.

Building Height

The building height of the west side of the proposed warehouse would not exceed 45 feet. Figure 3-15, Architectural Elevation, has been revised in the Final EIR to reflect this adjustment (Appendix B).

2.3 Figure Edits

2.3.1 Figure 3-15, Architectural Elevation

Figure 3-15 in the Draft EIR depicted the building elevations on the west end of the Project site as above 45 feet. As of February 2026, a Specific Plan Amendment has been adopted modifying the building height standard within the CIBP zone. The revised development standard states, "*The maximum building height shall be 65 feet, with the following exception: (1) The building height shall be limited to 45 feet within the portion of the lot that falls within 100 feet of an adjacent residential zone.*" Figure 3-15 has been revised to reflect the new maximum building elevation on the west end as 45 feet, which is consistent with the assumptions and analysis included within the Draft EIR. Refer to Appendix B Architectural Elevations for the revised Figure 3-15.

2.4 Changes to the Draft Environmental Impact Report

2.4.1 Chapter 3, Project Description

Existing Project Site

Location: Section 3.2, Environmental Setting, Existing Project Site (pp. 3-2)

Explanation for Change and Discussion:

A comment received from the Golden State Environmental Justice Alliance identified a typographical error of which Specific Plan District the Project site was located in. The Project is accurately identified in the Main Street/Interstate 15 District throughout the Draft EIR, with the exception of pp.3-2. The changes reflect the accurate District and description from the Main Street Freeway Corridor Specific Plan.

Changes:

According to the Specific Plan, the ~~Highway 395~~ Main Street/Interstate-15 District (District) is intended to be a mixed-use district emphasizing large-scale regional commercial and service uses that are designed to serve the region as a whole, as well as residential uses in a range of densities. The District is also intended to capture employment-generating uses along Highway 395 (City of Hesperia 2021). The area to the west of the Oro Grande Wash is appropriately reserved for employment-generating light industrial uses. The designation capitalizes on its location along Highway 395 and its connection to Southern California Logistics Airport (SCLA). ~~intended to provide enhanced vehicular, truck, and rail accessibility for commercial/industrial business park uses by taking advantage of its location along the I-15 corridor with its connection to U.S. Highway 395 and its linkage to the Southern California Logistics Airport, a major logistics hub located approximately 11 miles north of the Project site via U.S. Highway 395 in the City of Victorville. Per the Specific Plan, the recommended district land uses build upon the presence of a major truck stop and other existing and planned light industrial uses (City of Hesperia 2021). The purpose of this district is to create employment generating uses in a business park setting. The kind of industrial uses envisioned in this district include light industrial, light manufacturing, and industrial support uses, mainly conducted in enclosed buildings, with minimal environmental impacts.~~ The Project is consistent with these types of uses.

2.4.2 Section 4.1, Aesthetics

Location: Section 4.1.4, Impact Analysis, Threshold C, Table 4.1-2, Project Consistency with Development Standards for CIBP Zone (pp. 4.1-12 through 4.1-14)

Explanation for Change and Discussion:

A comment received from the Golden State Environmental Justice Alliance identified a typographical error of which the maximum building height allowed in the CIBP zone is 45 feet, rather than 60 feet, in areas that are adjacent within 100 feet of a residential zone. As of February 2026, a Specific Plan Amendment has been adopted modifying the building height standard within the CIBP zone. The revised development standard states, "*The maximum building height shall be 65 feet, with the following exception: (1) The building height shall be limited to 45 feet within the portion of the lot that falls within 100 feet of an adjacent residential zone.*" Table 4.1-2 also states the

maximum building height is 48 feet, rather than 50 feet. The maximum building height for the west side of the building was reduced to 45 feet, measured from the finished floor to the top of the building parapets. As mentioned above, Figure 3-15 has been revised to reflect the new maximum building elevation on the west end as 45 feet, which is consistent with the assumptions and analysis included within the Draft EIR.

Adjacent residential zones are located to the south and partially to the west of the Project site. The property to the west contains a nonconforming fleet repair facility, and the property to the south is currently vacant. The building height would be limited to 45 feet within 100 feet of the adjacent residential zones. Minor architectural projections up to 48 feet are limited to façade articulation and rooftop equipment screening and do not materially increase the overall building mass or visual profile and would therefore not conflict with applicable zoning or other regulations governing scenic quality. ***Changes:***

Table 4.1-2. Project Consistency with Development Standards for CIBP Zone

Hesperia Main Street and Freeway Corridor Specific Plan Development Standards for CIBP Zone	Project Design
Minimum Lot Size: 10 acres **Minimum Width:** 500 feet **Minimum Depth:** 500 feet	***Consistent.*** The proposed Project lot size is consistent with these standards, as detailed below: ▪ Lot Size: 19.2 acres ▪ Width: Approximately 1,323 feet ▪ Depth: Approximately 699.7 feet *See Figures 3-11, Site Plan, and 3-12, Detailed Site Plan, in Chapter 3, Project Description.*
Maximum Gross Floor Area Ratio: 0.50	***Consistent.*** The proposed building would have a gross floor area ratio of .477. The development of a 419,840-square-foot warehouse is the most efficient use of the property. However, because the building would be greater than 200,000 square feet, a Conditional Use Permit would be required for the Project and would include Conditions of Approval that would ensure project development would be consistent with the intent of the Specific Plan Standards. *See Figures 3-11 and 3-12 in Chapter 3.*
Maximum Building Height: ~~60 feet~~ 65 feet (45 feet within the portion of the lot that falls within 100 feet of an adjacent residential zone)	***Consistent.*** The maximum building height for the building would be ~~48~~ 50 feet, measured from the finished floor to the top of the building parapets. Adjacent residential zones are located to the south and partially to the west of the Project site. The property to the west contains a nonconforming fleet repair facility, and the property to the south is currently vacant. The building height would be limited to 45 feet within 100 feet of the adjacent residential zones. Minor architectural projections up to 48 feet are limited to façade articulation and rooftop equipment screening and do not materially increase the overall building mass or visual profile.

Table 4.1-2. Project Consistency with Development Standards for CIBP Zone

Hesperia Main Street and Freeway Corridor Specific Plan Development Standards for CIBP Zone	Project Design
	See Figures 3-14, Schematic Renderings, and 3-15, Architectural Elevations, in Chapter 3.
Street Yard Setbacks: 25 feet **Front Yard Setback:** 25 feet **Street Side Yard Setback:** 15 feet **Rear Yard Setback:** None (except where the rear yard abuts a residential zone or residential development as a part of a Regional Commercial zone: 50 feet) Interior Side Yard Setback: None (except where the interior property line abuts a residential zone, or residential development as a part of a Regional Commercial zone: 20 feet)	***Consistent.*** Proposed setbacks of front and side yards would be a minimum of 25 feet. *See Figures 3-11 and 3-16, Landscaping Plan, in Chapter 3.*
Parking and Loading: In addition to the off-street parking requirements and standards set forth in Chapter 16.20, Article IV (Parking and Loading Standards) of the HMC, the following shall apply: (1) To alleviate the unsightly appearance of loading facilities for industrial uses, these areas should not be located at the front of buildings where it is difficult to adequately screen them from view. Such facilities are more appropriately located at the rear of the site where special screening may not be required. (2) When it is not possible to locate loading facilities at the rear of the building, loading docks and doors should not dominate the frontage and must be screened from the street. Loading facilities should be offset from driveway openings. (3) Backing from the public street onto the site for loading into front end docks causes unsafe truck maneuvering and should not be utilized except at the ends of industrial cul-de-sacs where each circumstance will be studied individually at the time of design review.	***Consistent.*** Parking areas would be provided on-site consistent with Chapter 16.20, Article IV (Parking and Loading Standards) of the HMC. Single loaded truck bays would be located entirely on the eastern side of the proposed building when viewed from southbound Phelan Street. The facades of the building sides when viewed from these locations feature walls with varying paint colors, rooflines, off-set walls, and windows. Each side of the facades are complemented with a variety of building materials, windows with high quality glazing. and accent panels. The Project would also include an 8-foot steel tube fence for screening from the street. In addition, the Project's landscape plan incorporates vegetative screening to soften views of the Project site and to enhance visual quality. *See Figures 3-11, 3-14, 3-15, and 3-16 in Chapter 3.*
Landscaping: (1) Drought-tolerant and water conserving landscaping and water efficient irrigation systems and techniques shall be utilized whenever possible. (2) In addition, the design standards and guidelines included in Chapter 11 (Industrial Design Standards and Guidelines) of this Plan shall apply. The provisions of Chapter 16.20, Article XII (Landscape Regulations) and Chapter 16.24 (Protected Plants) of the HMC shall apply with the following exceptions/additions: (3) Industrial development in this zone shall provide a minimum of ten percent on-site landscaping, including that required in setback areas. Refer to section 16.20 Article XII of the HMC for minimum landscape requirements.	***Consistent.*** Project landscaping would consist of water efficient landscaping that would incorporate natural desert vegetation and would feature a variety of trees, shrubs, accents, and groundcovers. The sites for proposed building would provide approximately 10.6% landscape coverage. *See Figures 3-11 and 3-16 in Chapter 3.*

Table 4.1-2. Project Consistency with Development Standards for CIBP Zone

Hesperia Main Street and Freeway Corridor Specific Plan Development Standards for CIBP Zone	Project Design
Walls and Fences: (1) An industrial development adjacent to any residential zone shall have a minimum 6 foot high wall, not to exceed 8 feet, along property lines adjacent to such districts. (2) Both sides of all perimeter walls should be architecturally treated. Appropriate materials include decorative masonry, concrete, stone and brick.	***Consistent.*** The Project site is adjacent to a Rural Estate Residential Zone on the southwestern boundary. The Project will include an 8-foot steel tube fence and the Project's landscape plan incorporates vegetative screening to soften views of the Project site and to enhance visual quality. *See Figures 3-11 and 3-16 in Chapter 3.*
Outdoor Displays, Storage, Equipment, and Work Areas: (1) No retail sales, merchandise displays or work areas shall occur outside building(s). (2) Outside storage and equipment shall be confined to the rear half of the property or the rear of the principal structure on site, whichever is more restrictive, and screened from public view from any adjoining properties and public rights-of-way by appropriate walls, fencing and landscaping. (3) Outdoor hoists are subject to the conditions and standards listen in Chapter 9(C)(4.18).	***Consistent.*** While the Project does not involve retail sales or merchandise displays and work areas would primarily be located within the warehouse building, outdoor equipment such as yard trucks and pallets may be stored within the truck court. These areas would be confined to the rear of the buildings and enclosed with fencing and vegetative screening. *See Figures 3-11 and 3-12 in Chapter 3.*

As of February 2026, a Specific Plan Amendment has been adopted modifying the building height standard within the CIBP zone. The revised development standard states, "*The maximum building height shall be 65 feet, with the following exception: (1) The building height shall be limited to 45 feet within the portion of the lot that falls within 100 feet of an adjacent residential zone.*" As provided in Table 4.1-2, ~~the Project would be consistent with the development standards of the CIBP zone.~~ adjacent residential zones are located to the south and partially to west of the Project site. The property to the west contains a nonconforming fleet repair facility, and the property to the south is currently vacant. The proposed Project complies with the amended development standard by limiting the building height to 45 feet within 100 feet of the adjacent residential zones. Minor architectural projections up to 48 feet are limited to façade articulation and rooftop equipment screening and do not materially increase the overall building mass or visual profile.

Additionally, due to the size and scale of industrial buildings, it is especially important to consider design to ensure compatibility with other parts of the community. Chapter 11 of the Specific Plan provides additional details regarding design standards and guidelines for industrial development (City of Hesperia 2020). In accordance with the Specific Plan design guidelines, all setback areas would be landscaped, and building orientation, siting and entrances would be designed to minimize conflicts with the surrounding visual environment. For instance, landscaping and vegetation is incorporated into the site plan to provide visual screening and building facades would feature a complementary neutral color palette and a variety of building materials.

The building colors shall be reviewed to assure conformance with the development standards of the Hesperia Municipal Code and the Specific Plan. Buildings would include materials such as concrete, metal, aluminum entry framing, and glass, and building elevations would include vertical and horizontal elements that would break up the overall massing of the buildings and provide visual interest (see Figures 3-14, Schematic Renderings, and 3-15, Architectural Elevations, in Chapter 3).

The visual setting surrounding the Project site currently consists of a mix of developed and undeveloped areas. Development in the area includes commercial uses, trucking-related uses (i.e., truck stops), lodging accommodations, big-box retail developments, public roadways and landscaping, and major interstate highways. Undeveloped areas consist of flat desert terrain with sparse vegetation. As a result, the Project site and surrounding area can be characterized as low density industrial and commercial development within a desert landscape setting. The Project would result in the development of vacant, undeveloped land with an industrial building that would feature contemporary architecture landscaping, and streetscape improvements that would assist in completing a cohesive 'gateway' corridor envisioned in the Specific Plan. The Project would also eliminate the illegal uses currently occurring on site (trespassing and illegal dumping).

In summary, ~~the Project would not conflict with applicable zoning or other regulations governing scenic quality and~~ the Project would be consistent with the visual character of the surrounding area. Although the Project is inconsistent with the height standards for the CIBP zoning district, the 3-foot height exceedance would not impact public views and would therefore not conflict with applicable zoning or other regulations governing scenic quality. Therefore, with compliance with the City's Development Code and the Specific Plan design standards and guidelines and implementation of site specific landscaping, the Project would not conflict applicable zoning or other regulations governing scenic quality and impacts related to visual character and quality would be less than significant.

2.4.3 Chapter 5, Effects Found Not to be Significant

Land Use and Planning

Location: Section 5.5, Land Use and Planning, Main Street and Freeway Corridor Specific Plan (pp. 5-7)

Explanation for Change and Discussion:

This section discusses the maximum building height but does not include the exception regarding adjacent land zoned for residential. The change includes this exception. Additionally, a Specific Plan Amendment has been adopted modifying the building height standard within the CIBP zone. This section includes those changes.

Changes:

Among the permitted uses in the CIBP zone, warehousing and wholesale distribution centers are permitted at 200,000 square feet or less. Warehouses and wholesale distribution centers over 200,000 square feet are conditionally permitted. The Specific Plan states that the maximum gross floor area ratio in CIBP zones is 0.35 (City of Hesperia 2021). ~~Additionally, maximum building height within the zone is 60 feet at the setback line; thereafter, height may be increased at a rate of 1 foot in height for every additional 3 foot increase in front yard setback, up to a maximum building height of 150 feet (City of Hesperia 2021).~~ As of February 2026, a Specific Plan Amendment has been adopted modifying the building height standard within the CIBP zone. The revised development standard states, "*The maximum building height shall be 65 feet, with the following exception: (1) The building height shall be limited to 45 feet within the portion of the lot that falls within 100 feet of an adjacent residential zone.*" Adjacent residential zones are located to the south and partially to the west of the project site. The building height would be limited to 45 feet within 100 feet of the adjacent residential zones. Minor architectural projections up to 48 feet are limited to facade articulation and rooftop equipment screening and do not materially increase the overall building mass or visual profile.

3 Response to Comments

This chapter of the Final Environmental Impact Report (EIR) for the Phelan 20 Project (Project) includes a summary of all comment letters that were submitted during the public review period for the Draft EIR, along with responses to comments in accordance with California Environmental Quality Act (CEQA) Guidelines Section 15088. Copies of all comment letters that were submitted during the public review period for the Draft EIR are in Appendix A. The 45-day review period for the Draft EIR began on June 13, 2025, and ended on August 1, 2025.

The responses amplify or clarify information provided in the Draft EIR and/or refer the reader to the appropriate place in the document where the requested information can be found. Comments that are not directly related to environmental issues (e.g., opinions on the merits of the Project unrelated to its environmental impacts) are noted for the record. Where text changes in the Draft EIR are warranted based on comments received, updated Project information, or other information provided by City staff, those changes are noted in the response to comment and the reader is directed to Chapter 2, Changes to the Draft EIR, of this Final EIR.

These changes to the analysis contained in the Draft EIR represent only minor clarifications/amplifications and do not constitute significant new information. In accordance with CEQA Guidelines Section 15088.5, recirculation of the Draft EIR is not required.

All written comments on the Draft EIR are listed in Table 3-1. All comment letters received on the Draft EIR have been coded with a number to facilitate identification and tracking. The comment letters were reviewed and divided into individual comments, with each comment containing a single theme, issue, or concern. Individual comments and the responses to them were assigned corresponding numbers (e.g., 1-1, 1-2, 1-3). To aid readers and commenters, electronically bracketed comment letters have been reproduced in this document and are included as Appendix A; the corresponding responses are provided below. The interested parties listed in Table 3-1 submitted letters during the public review period for the Draft EIR.

Table 3-1. Comments Received on the Draft EIR

Comment Letter	Commenter	Date
1	Mojave Water Agency	June 17, 2025
2	Southern California Edison	July 2, 2025
3	Mojave Desert Air Quality Management District	July 15, 2024[1]
4	California Department of Transportation	July 29, 2025
5	Golden State Environmental Justice Alliance	July 30, 2025
6	Advocates for the Environment	August 1, 2025

The following responses were prepared to address the comments that were received during the public review period.

[1] This comment letter was dated July 15, 2024. It is presumed this was an error and the letter was meant to be dated 2025.

INTENTIONALLY LEFT BLANK

Response to Comment Letter 1

Mojave Water Agency
Christy Huiner, Senior Water Resource Analyst
June 17, 2025

1-1 This comment expresses support for this project on behalf of the Mojave Water Agency. The City will include the comment as part of the Final EIR for review and consideration by the decision-makers prior to a final decision on the project. No further response is required or necessary.

INTENTIONALLY LEFT BLANK

Response to Comment Letter 2

Southern California Edison
Jeff Clark
July 2, 2025

2-1 This comment states that Southern California Edison (SCE) reviewed the Draft EIR and believes the Project may interfere with easement rights, and/or facilities held by SCE within the subdivision boundaries. SCE requests copies of all maps including grading, drainage, landscape, and street improvement plans to determine the extent of the interference. The SCE facilities and the easements should be plotted on the maps. The developer must state the proposed method to eliminate any interference.

2-2 The comment serves as a conclusion and provides contact information for questions about the letter. This comment does not raise a specific concern related to the adequacy of the EIR, therefore, no further response is required.

INTENTIONALLY LEFT BLANK

Response to Comment Letter 3

Mojave Desert Air Quality Management District
Chris Anderson, Planning and Air Monitoring Supervisor
July 15, 2025

3-1 The comment states that the Mojave Desert Air Quality Management District (MDAQMD) has reviewed the EIR and provides a brief summary of the Project. This comment serves as an introduction to comments that follow.

3-2 The comment lists dust mitigation measure requirements for construction. The Project includes PDF-AQ-1 that incorporates all of the measures identified in the MDAQMD comment and the Draft EIR acknowledges the Project is required to comply with all applicable MDAQMD Rules and Regulations, including, but not limited to Rules 401 (Visibile Emissions), 402 (Nuisance), and 403 (Fugitive Dust Control for the Mojave Desert Planning Area) (Draft EIR p. 4.2-28). The City acknowledges the comment and notes that it confirms information included in the Draft EIR and does not raise a specific issue regarding the adequacy of the Draft EIR's analysis; therefore, no further response can be provided or is required.

3-3 The comment serves as a conclusion and provides contact information for questions about the letter. This comment does not raise a specific concern related to the adequacy of the EIR, therefore, no further response is required.

INTENTIONALLY LEFT BLANK

Response to Comment Letter 4

California Department of Transportation
Janki Patel, Branch Chief – Local Development Review, Division of Transportation Planning
July 29, 2025

4-1 The comment states that the California Department of Transportation (Caltrans) has reviewed the IS/MND and provides a brief summary of the Project. The document was mistakenly referred to as an IS/MND rather than an EIR. This mistake does not change the nature of the comment. This comment does not raise a specific concern related to the adequacy of the EIR, therefore, no further response is required.

4-2 This comment requests that responses to the comments provided in the Caltrans memorandum be provided in the next review submittal, requests that a PE stamp be added to Appendix I (Transportation Technical Memo), and requests a Safety Analysis Report be provided for the intersection of Phelan Rd and US 395. The comment provides a link to the Caltrans Local Development Review (LDR) Safety Review Practitioner's Guidance for which the safety analysis should follow.

A PE stamp has been added to Appendix I. In addition, a Traffic Impact Analysis Technical Memorandum, including a safety analysis, has been prepared in response to Caltrans comments 4-2 through 4-11 below and is included as Appendix C of the FEIR. The analysis was prepared consistently with the requirements and policies from the City of Hesperia Traffic Impact Analysis Guidelines for Vehicle Miles Traveled (VMT) and Level of Service Assessment (LOS), and the Caltrans Local Development Review (LDR) Safety Review Practitioner's Guidance. A PE stamp has also been provided on the Traffic Impact Analysis Technical Memorandum.

In response to Caltrans' comments, the analysis presents trip generation, distribution, and assignment characteristics for the proposed project; provides an offsite queuing analysis for the Existing (2023), Opening Year (2027) and Horizon Year (2040) buildout conditions with the project-added traffic; and reviews collision data for US 395 intersections and Interstate 15 (I-15) ramps within the project study area.

4-3 This comment requests that a Traffic Impact Analysis Report be prepared.

As noted above, Appendix C of the FEIR includes a Traffic Impact Analysis Technical Memorandum.

4.4 This comment requests that a figure be provided to show the proposed project's trip distribution.

Appendix C, Figure 4 presents the proposed project's trip distribution.

4-5 This comment requests discussion on the type of trucks this facility will service be included and that truck turning templates be provided for the intersection of Phelan Rd/US-395.

Appendix C includes a discussion on the type of trucks the project will service (see the Site Access section) and Appendix C, Figure 3 includes truck turning templates.

4-6 This comment requests a queuing analysis be performed for the intersection of Phelan Rd/US-395 and any additional locations that will generate additional trips on the State Highway System.

Appendix C includes a queuing analysis for the Phelan Rd/US-395 intersection, as well as for five additional intersections where project traffic would be added.

4-7 This comment requests that traffic data be provided to support the queuing analysis.

Appendix C includes the raw traffic count data and queuing analysis worksheets used in the queuing analysis.

4-8 This comment requests that a queuing analysis for the existing conditions, opening year, and horizon year be provided.

Appendix C includes a queuing analysis for the existing conditions, opening year, and horizon year conditions, with and without the project-added traffic.

4-9 This comment states that the traffic impacts from nearby pending projects may affect the proposed development and requests that the leading agency be consulted for the status and information on these projects.

The traffic from nearby pending projects (Cumulative projects) were included in the traffic impact analysis and are based on the cumulative project list obtained from the City of Hesperia at the time of the Project's Notice of Preparation (NOP). Appendix C includes a summary of the cumulative projects and cumulative projects' trip generation.

4-10 This comment requests verification of the speed limit on Phelan Road, which was stated to be 65 miles per hour (MPH).

The speed limit on Phelan Road has been verified and is 55 MPH. This change in speed limit does not affect the transportation related findings of the EIR.

4-11 This comment requests clarification on the truck route status of Phelan Road.

As noted in Appendix C, Phelan Road west of US 395 is a City designated truck route. However, Phelan Road/Main Street east of US 395 is no longer designated as a City truck route.

4-12 This comment discusses equitable access, stating if any Caltrans facilities are impacted by the project, they must comply with the American Disabilities Act Standards upon project completion. The Project must also ensure access considerations align with Caltrans' equity mission.

Design of the project will comply with all required federal, state, and local standards, including the American Disabilities Act. This comment does not raise a specific concern related to the adequacy of the EIR, therefore, no further response is required.

4-13 This comment serves as a reminder of when a Caltrans-issues encroachment permit would be required, and where more information on encroachment permit application and submittal requirements can be found.

An encroachment permit application will be submitted to Caltrans at the time one is required. This comment does not raise a specific concern related to the adequacy of the EIR, therefore, no further response is required.

4-14 This comment states no further review from the Local Development Review Branch is required. This comment goes on to state the Encroachment Permit Office will serve as the primary point of contact upon completion of the development entitlement process. This comment does not raise a specific concern related to the adequacy of the EIR, therefore, no further response is required.

4-15 This comment serves as a conclusion and provides contact information for questions about the letter. This comment does not raise a specific concern related to the adequacy of the EIR, therefore, no further response is required.

INTENTIONALLY LEFT BLANK

Response to Comment Letter 5

Golden State Environmental Justice Alliance
Vashon Simien, Blum, Collins & Ho, LLP
July 30, 2025

5-1 This comment notes that the comment letter has been submitted by Blum, Collins, & Ho on behalf of the Golden State Environmental Justice Alliance. The comment states that the Golden State Environmental Justice Alliance formally requests to be added to the public interest list regarding any subsequent environmental documents, public notices, hearings, etc. for this project and provides contact information. This comment serves as an introduction to comments that follow.

5-2 The comment summarizes the proposed Project and does not identify specific areas where the EIR is inadequate, therefore, no further response is required.

5-3 This comment states that preparing a single, standalone EIR for the Project is piecemealing because the City of Hesperia (City) should have prepared an EIR for the Hesperia Commerce Center I, Hesperia Commerce Center II, I-15 Industrial Park, and Poplar 18. The Hesperia Commerce Center I project is an approximately 3.5 million-square-foot warehouse project located approximately 1.25 miles south of the Project. The Hesperia Commerce Center II project is an approximately 2.5 million-square-foot warehouse project located approximately 0.02 miles north of the Project. The I-15 Industrial Park project is a 1.1 million-square-foot warehouse project located approximately 0.37 miles east of the Project. The Poplar 18 project is a 414,700 square-foot warehouse project located approximately 0.65 miles southeast of the Project. The Hesperia Commerce Center project was approved in 2013 (and a comprehensive EIR was certified) and is currently under construction. Hesperia Commerce Center II was approved in 2013 and an addendum to the previously approved EIR was approved in 2024 and is currently under construction. I-15 Industrial Park project was approved in 2022. The Poplar 18 project EIR was approved in 2023. According to *Banning Ranch Conservancy v. City of Newport Beach*, no piecemealing occurs when projects can be implemented independently. Here, the Hesperia Commerce Center project, Hesperia Commerce Center II project, I-15 Industrial Project, and Poplar 18 project are all separate disconnected projects that each have independent utility, meaning that neither project is dependent on the other. Additionally, the EIR accounted for these projects in its list of cumulative development projects. Because an EIR has already been certified for these projects, these projects are separate, individual projects, and because the Project's EIR fully accounts for the cumulative impacts of these projects and the proposed Project, preparation of a single, standalone EIR for the Project does not constitute piecemealing under CEQA. Because no new environmental issues were identified, no further analysis is necessary.

5-4 This comment states the EIR does not include any floor plan, detailed site plan, or detailed grading plan, and that Figurer 3-12 does not provide any detailed information such as architectural notes, site data, and zoning conformance information. Additionally, Figure 3-17 does not include the earthwork quantity notes or section details. The comment states the EIR has excluded the detailed grading plan, floor plan, and detailed site plan and evaluations in their whole and true forms from public review, and states the EIR must be revised to include these items.

Section 15124 of the CEQA Guidelines provides guidance regarding the contents of an EIR's project description. Among these requirements are a general description of the project's characteristics; the

location of the project, preferably shown on a detailed map; a statement of objectives sought by the proposed project; and a statement briefly describing the intended uses of the DEIR. According to Section 15124, a project description shall reflect the project specifics, the project site, and its surroundings but should not provide extensive detail beyond that needed for evaluating environmental impacts.

The project description chapter of the DEIR includes a detailed description of the Project, the Project site and its surroundings, and the anticipated operational and construction characteristics of the Project. Figures are provided and include a Project location map (Figure 3-1 and 3-2), a high-resolution aerial of the Project site and surrounding area (Figure 3-3), a detailed site plan (Figure 3-12), and detailed landscape plan (Figure 3-16). Further, Figures 3-14 and 3-15 include conceptual depictions of building elevations. Taken together, the narrative and graphics provided within the project description and accompanying figures support the DEIR's good faith effort at full disclosure of the Project's potentially significant impacts under CEQA. The level of detail provided complies with the CEQA Guidelines and provides sufficient detail to evaluate environmental impacts.

A grading plan was not included within the DEIR because it was determined to be overly technical (the amount of detail in a project description should reflect the size and scope of the Project and the types and severity of impacts that are expected [AEP 2020]) and the grading required for the Project was discussed throughout the DEIR. As outlined in Chapter 3 of the DEIR, the proposed Project development would generally maintain the existing grades and landform of the Project site. Additionally, Chapter 3 states "the site would not require the import or export of earthwork materials as on-site material would be balanced during the grading phase." Therefore, there would be no additional truck trips necessary for the import or export of earthwork materials.

With regard to internal floor plans, specific floor plans are not available because an end user of the proposed warehouse building has not yet been identified. It would be speculative for the DEIR to include greater level of detail or evaluate the Project on such speculation. Additionally, CEQA does not require information of that nature. Sufficient information was provided in the DEIR to adequately evaluate environmental impacts and the inclusion of minor site statistics does not have any bearing on the environmental analysis provided within the DEIR. Because no new environmental issues were identified, no further analysis is necessary.

5-5 The comment states that the EIR does not include meaningful analysis of relevant environmental justice issues in evaluating potential air quality impacts, including cumulative impacts. The comment states this is particularly important due to the Project site's location in an area that is burdened by existing levels of air pollution, as indicated by CalEnviroScreen.

The comment selectively cites to and misstates census tract information from CalEnviroScreen and draws some erroneous conclusions and opinions about the same. For example, the comment fails to disclose that the census tract identified (CalEnviroScreen 4.0) includes substantial acreage dedicated to open space and public uses such as schools or the airport or commercial and industrial uses and the Project is separated from the residential areas in the census tract.

In addition, to evaluate the potential for the Project to create a health risk, construction and operation health risk assessments were prepared for the Project and incorporated into the EIR (as described in Section 4.2 of the Draft EIR). As discussed in the Draft EIR, Project construction and operation would not

result in exceedances of criteria air pollutant thresholds after implementation of MM-AQ-1 (Draft EIR pp. pp. 4.2-30 through 4.2-32). In addition, the potential health effects associated with these criteria air pollutants were evaluated and were also determined to be less than significant (Draft EIR pp. 4.2-33 through 4.2-38 and Appendix B-3). Finally, it is also important to note that the Project's incremental increase in potential cancer and non-cancer health risk impacts with regard to sensitive receptors in the vicinity of the Project and haul routes was determined to be less than significant with implementation of MM-AQ-1. Moreover, development of the project at the project site would provide quick and efficient access to Highway 395 and Interstate 15, thereby eliminating the need for truck traffic to take longer routes through residential or commercial/retail areas. This comment does not provide any substantial evidence concerning the adequacy of the analysis and no further response is required.

5-6 The comment states that there are three state-approved compliance modeling software programs for non-residential buildings to show compliance with Title 24, and that the California Emissions Estimator Model (CalEEMod) is not listed as approved software. Of importance, the Project would be required to comply with Title 24 by law and the CalEEMod modeling is not intended to demonstrate compliance with Title 24, but rather, to provide a reasonable estimate of potential energy demand (including petroleum, which the compliance modeling software mentioned in the comment does not include) for public disclosure and informational purposes under CEQA. Compliance with Title 24 requires the use of approved software programs as listed by the commenter as these programs are designed to ensure buildings meet specific energy efficiency criteria. This is not the purpose of an EIR. Rather, an EIR is intended to provide environmental impact analysis and CalEEMod is specifically tailored for this purpose. Title 24 compliance software, on the other hand, focuses on building energy efficiency and does not provide the comprehensive environmental impact analysis required for an EIR. In summary, while Title 24 compliance software ensures buildings meet energy efficiency standards, CalEEMod is used for assessing broader environmental impacts, making it suitable for EIRs.

The comment also states that the CalEEMod modeling does not comply with the 2022 Building Energy Efficiency Standards, and under-reports energy impacts, but the comment does not provide evidence of this statement. In fact, CalEEMod 2022.1 bases the default energy use from nonresidential land uses on 2019 consumption estimates from the California Energy Commission's 2018-2030 Uncalibrated Commercial Sector Forecast (Commercial Forecast) and the energy use estimates are based on existing buildings and are not representative of those constructed in compliance with energy efficiency requirements of the latest Title 24 Building Energy Efficiency Standards. Therefore, the default energy consumption estimates provided in CalEEMod are very conservative, overestimating expected energy use compared to what would be expected for new buildings subject to the latest Energy Code with more stringent energy efficiency measures. Thus, the estimated electricity demand for the Project likely over-reported (rather than under reported) energy impacts and provided a conservative analysis.

Overall, the commenter has not provided any substantial evidence to demonstrate that the use of CalEEMod to estimate energy demand is either inappropriate or inaccurate. Therefore, no revisions are required, and no further response is necessary.

5-7 This comment expresses concerns regarding the EIR's analysis of the Project's transportation impacts specifically the potential to substantially increase hazards due to a geometric design feature or incompatible uses; or the project's potential to result in inadequate emergency access. The comment states there are no exhibits depicting the available truck/trailer turning radius or exhibits providing on-

site analysis regarding available space on the property to accommodate heavy truck maneuvering. Truck turning exhibits are provided in Appendix A, which show the inbound and outbound path at Phelan Road and Caliente Road and the project driveway for a typical truck/trailer. The exhibits also show the inbound and outbound path at the truck loading docks. As shown, the project driveway and internal drive aisles are anticipated to accommodate the wide turning radius of trucks as currently designed. Because no new environmental issues were identified, no further analysis is necessary.

5-8 The comment states that the EIR did not include information regarding the buildout conditions of the City's General Plan and/or Main Street and Freeway Corridor Specific Plan. As described in Section 6.1 Growth-Inducing Impacts of Chapter 6, Other CEQA Considerations, buildout conditions are discussed stating "Upon buildout, the City anticipates growing to more than 243,000 residents (City of Hesperia 2010). As such, the Project-related increase of approximately 351 employees would represent a nominal percentage of the City's projected future population upon General Plan buildout." No revisions are required.

5-9 This comment expresses a concern that the EIR did not include a consistency analysis with the City's Specific Plan and lists several policies within the Specific Plan that are believed to be applicable to the Project. Please refer to Response to Comment 5-14. While the Draft EIR did indeed include an analysis of the Project's consistency with the Specific Plan, it did not analyze consistency with each and every Specific Plan policy. Rather, the analysis focused on goals and policies that have been adopted by the City to avoid or mitigate environmental effects of new development projects. As such, the Draft EIR has evaluated the project's consistency with all applicable Specific Plan land use policies and no revisions are necessary. Because no new environmental issues were identified, no further analysis is necessary.

5-10 The Draft EIR does mistakenly state the Project site is in the Highway 395/I-15 District in Chapter 3, Project Description. This is a typographical error, and the correct corridor as Main Street/I-15 Corridor is noted throughout the rest of the Draft EIR. Please refer to Chapter 2, Changes to the EIR, where this correction has been made.

5-11 The MSFCSP states the maximum building height for the CIBP Zone is 60 feet (45 feet within the portion of the lot that falls within 100 feet of an adjacent residential zone). However, as of February 2026, a Specific Plan Amendment has been adopted modifying the building height standard within the CIBP zone. The revised development standard states, "*The maximum building height shall be 65 feet, with the following exception: (1) The building height shall be limited to 45 feet within the portion of the lot that falls within 100 feet of an adjacent residential zone."* Please refer to Chapter 2, Changes to the EIR, where this correction has been made.

Section 4.1, Aesthetics, Table 4.1-2, stated the maximum building height would be 48 feet, measured from the finished floor to the top of the building parapets. This was a typographical error, as the original maximum building height was 50 feet, measured from the finished floor to the top of the building parapets. Please refer to Chapter 2, Changes to the EIR, where this correction has been made. A global edit has been applied to the EIR, adjusting the building height of the west side of the proposed warehouse to 45 feet, as that portion of the lot falls within 100 feet of an adjacent residential zone. Figure 3-15, Architectural Elevation, has been revised in the Final EIR to reflect this adjustment. Please refer to Chapter 2, Changes to the EIR, Sections 2.4.1 through 2.4.3, where this correction has been made.

As mentioned above, adjacent residential zones are located to the south and partially to the west of the Project site. The property to the west contains a nonconforming fleet repair facility, and the property to the south is currently vacant. The building height would be limited to 45 feet within 100 feet of the adjacent residential zones. Minor architectural projections up to 48 feet are limited to façade articulation and rooftop equipment screening and do not materially increase the overall building mass or visual profile and would therefore not conflict with applicable zoning or other regulations governing scenic quality. Please refer to Chapter 2, Changes to the EIR, Sections 2.4.1 through 2.4.3, where this correction has been made.

5-12 This comment expresses a concern that the Project is inconsistent with the SCAG 2020-2045 RTP/SCS. Please refer to Response to Comment 5-14. Consistency with the SCAG 2020-2045 RTP/SCS was included within Table 5-2 of the Effects Found Not to be Significant chapter of the Draft EIR. The comment also expresses concern regarding the EIR's air quality, GHG, and transportation analysis. Please refer to Response to Comment 5-7 in which concerns regarding transportation are addressed. Additionally, the Applicant has reached a settlement agreement that involves the purchase of GHG offsets. Therefore, the commenter's issues have been addressed.

5-13 This comment states Table 5-2: Regional Transportation Plan/Sustainable Communities Strategy Consistency Analysis in the EIR provides a misleading and erroneous consistency analysis with the Goals of SCAG's 2024 Connect SoCal RTP/SCS. Due to errors in modeling without supportive evidence, as noted in the SWAPE letter attached and the EIR's determination that the project will have significant and unavoidable cumulatively considerable VMT and GHG impacts, the comment states the project is directly inconsistent with the certain policies listed in the Regional Transportation Plan/Sustainable Communities Strategy. Please refer to Response to Comment 5-14. Consistency with the SCAG 2024 Connect SoCal RTP/SCS was included within Table 5-2 of the Effects Found Not to be Significant chapter of the Draft EIR. Additionally, the Applicant has reached a settlement agreement that involves the purchase of GHG offsets. Therefore, the commenter's issues have been addressed.

5-14 This comment expresses a concern that the EIR did not include a consistency analysis with the City's General Plan and lists several policies within the General Plan that are believed to be applicable to the Project. The Draft EIR did indeed include a consistency analysis with applicable General Plan policies within each impact analysis chapter, and the Land Use and Planning chapter included a more focused analysis of the City's General Plan policies. The EIR did not include a consistency analysis for each and every goal, policy, and implementation policy of the General Plan because many of the goals and policies in the General Plan are City-level planning efforts that are not applicable to the Project and would not be the responsibility of the Project Applicant to implement. In addition, the thresholds used to determine the significance of a Project's land use impacts (per Appendix G of the CEQA Guidelines) ask whether a project would "Cause a significant environmental impact due to a conflict with any *applicable* land use plan, policy, or regulation adopted *for the purpose of avoiding or mitigating an environmental effect*" (emphasis added). Therefore, the Draft EIR included an analysis of the Project's consistency with each of the applicable General Plan goals and policies that have been adopted by the City to avoid or mitigate environmental effects of new development projects. As such, the Draft EIR has evaluated the project's consistency with all applicable General Plan land use policies, and no revisions are necessary. Because no new environmental issues were identified, no further analysis is necessary.

5-15 This comment offers observations regarding the DEIR's population and housing analysis including speculation regarding where the future workforce will reside and questions about job growth for the

Project and as identified in SCAG projects. The comment fails to cite, let alone address, the relevant CEQA threshold of significance. That threshold requires an evaluation of whether a project would "induce substantial unplanned population growth in an area, either directly (for example, by proposing new homes and businesses) or indirectly (for example, through extension of roads or other infrastructure)."

This comment does not establish that the DEIR fails to properly analyze or disclose the Project's less than significant impacts relative to that population and housing significance threshold. As DEIR Chapters 3 and 4 disclose, the Project site was previously vacant, and the property has been zoned for industrial use. The DEIR further discloses that the intensity of industrial development proposed by the Project complies with the City's General Plan designation and zoning standards.

As discussed in the Draft EIR, a future tenant of the warehouse has not yet been identified, and thus the number of jobs that the Project would generate cannot be precisely determined. Thus, the Draft EIR relied on employment estimates were calculated using average employment density factors reported by SCAG. Based off of these employment generation estimates, the Draft EIR concluded that the Project could generate approximately 351 employees, which is line with growth projections in the City's General Plan and SCAG 2020-2045 RTP/SCS. These growth projections were based on existing and planned land use patterns, which assumed that the Project site would be developed for industrial and employment generating uses. The High Desert/Victor Valley region has long been identified as an area having a low jobs–housing ratio (i.e., an area that has more potential workers living in a community than there are jobs for them),[2] resulting in high numbers of residents commuting out of the region for work. The has estimated that approximately 73% of workers residing in Hesperia commute out of the area to the southern Inland Empire cities and the broader Los Angeles region (City of Hesperia 2016). Although these conditions can be attributed to a number of factors, the most notable variable in the jobs-to-housing ratio is the lack of jobs growth in the region. A low jobs-to-housing ratio can result in adverse environmental and economic effects on local communities. For example, long-distance commutes result in increased traffic and air quality and greenhouse gas emissions. By developing an employment-generating use, the Project would provide job opportunities for those living in the area that may commute out of the area for work. Moreover, the applicable threshold of significance with regard to population and housing raises the question of whether a project would result in substantial unplanned population growth such that new housing would be required and the construction of such housing would result in environmental effects. Given the substantial jobs-housing imbalance and given that the Project site is designated for employment-generating uses, the Project would not result in unplanned population growth and would not require the construction of new housing. While the City is planning for population growth, it will require that future residential projects undergo a complete environmental analysis, which would be completely independent of the Project. In summary, because the Draft EIR's employment generation estimates are based on substantial evidence, the Draft EIR analysis with regard to population and housing is adequate as provided.

5-16 This comment expresses a concern regarding the EIR's findings of significance and cumulative impact analysis. The Draft EIR addressed findings of significance with regard to the proposed land use changes

[2] A jobs–housing ratio is a commonly used economic metric used to determine whether or not a community or region provides a sufficient number of jobs for its residents. The metric is calculated by finding the relationship between where people work ("jobs") and where they live ("housing"). As of 2016, the City had a jobs/housing ratio of 0.44, well off of regional targets ranging from 1.25–1.50 (City of Hesperia 2016).

in the Land Use and Planning chapter of the Draft EIR and within the Mandatory Findings of Significance section of the Draft EIR. Cumulative impacts were discussed for each resource topic and a comprehensive list of cumulative projects was compiled. The Draft EIR made the appropriate findings regarding the Project's significant and unavoidable impact determinations and feasible mitigation measures were applied where available. Because no new environmental issues were identified, no further analysis is necessary.

5-17 This comment expresses the opinion that the DEIR was required to analyze additional alternatives to satisfy CEQA's reasonable range of alternatives standard. The comment does not provide any specific justification for the opinion offered nor does it address the specifics of the DEIR's discussion and analysis in Chapter 7, Alternatives. As discussed in Chapter 7, under case law and CEQA Guidelines Section 15126.6(f), the discussion of alternatives is subject to a rule of reason and need not be exhaustive. An EIR need not consider a project alternative whose effects cannot be reasonable ascertained, whose implementation is remote and speculative, or whose execution does not substantially lessen or avoid the significant effects of a proposed project. As disclosed in the DEIR, a number of possible alternatives were initially considered and then some were rejected. Three alternatives were selected for further evaluation, including the No Project/No Development Alternative (Alternative 1), Other Development Project Alternative (Alternative 2), and the Reduced Development Intensity Alternative (Alternative 3). Each alternative received a CEQA compliant evaluation within the DEIR. The analysis disclose4s whether those alternatives meet project objectives and whether they would have potentially lesser, the same, or greater significant impacts. Thus, the DEIR adequately satisfies CEQA's requirement to evaluate a reasonable range of alternatives, therefore, no further response is required.

5-18 The comment serves as a conclusion to the letter with any substantive analysis, and requests that the City add the commenter to the City's public interest list for the Project. The comment is noted, and the City has added the commenter to its list of parties to be notified for the Project. The comment does no identify specific areas where the EIR is inadequate; therefore, no further response is required.

5-19 The comment serves as an introduction to the attached SWAPE letter, introduces the Project, and summarizes the conclusions of the letter. The comment states that the EIR fails to adequately evaluate the Project's GHG impacts, and a revised EIR should be prepared. The comment does not raise a specific issue regarding the adequacy of the Draft EIR's analysis; therefore, no further response can be provided or is required.

5-20 The comment provides a summary of the Project's operational GHG emissions and resultant significant GHG impact. In addition, the comment suggests that additional feasible mitigation measures should be incorporated. The City acknowledges this comment as an introduction to comments that follow. No further response is required or necessary.

5-21 The Applicant has reached a settlement agreement that involves the purchase of GHG offsets. Therefore, the commenter's issues have been addressed.

5-22 The comment provides a disclaimer regarding limited knowledge of the Project and the limits of SWAPE's analysis. The comment does not address any inadequacies of the EIR and not further response is required.

INTENTIONALLY LEFT BLANK

Response to Comment Letter 6

Advocates for the Environment
Dean Wallraff, Attorney at Law, Executive Director
August 1, 2025

The comments received from the Advocates for the Environment solely pertained to GHG emissions and impacts. The Responses to Comments 6-1 through 6-29 are as follows: The Applicant has reached a settlement agreement that involves the purchase of GHG offsets. Therefore, the commenter's issues have been addressed.

INTENTIONALLY LEFT BLANK

References

AEP (Association of Environmental Professionals). 2020. CEQA Portal Topic Paper: Project Description. February 10, 2020. Accessed January 2023. https://ceqaportal.org/tp/CEQA%20Project%20Description%202020%20Update.pdf.

CAPCOA. 2022. California Emissions Estimator Model (CalEEMod) User's Guide Version 2022.1. April 2022. https://www.caleemod.com/documents/user-guide/01_User%20Guide.pdf.

INTENTIONALLY LEFT BLANK

4 Mitigation Monitoring and Reporting Program

4.1 Introduction

California Public Resources Code Section 21081.6 requires that, upon certification of an EIR, "the public agency shall adopt a reporting or monitoring program for the changes made to the Project or conditions of Project approval, adopted in order to mitigate or avoid significant effects on the environment. The reporting or monitoring program shall be designed to ensure compliance during Project implementation." (PRC Section 21000–21177)

This Mitigation Monitoring and Reporting Program was developed in compliance with Section 21081.6 of the California Public Resources Code and Section 15097 of the CEQA Guidelines (14 CCR 15000–15387 and Appendices A–L.), and includes the following information:

- A list of mitigation measures
- The timing for implementation of the mitigation measures
- The party responsible for implementing or monitoring the mitigation measures
- The date of completion of monitoring

The City of Hesperia must adopt this Mitigation Monitoring and Reporting Program, or an equally effective program, if it approves the proposed Project with the mitigation measures that were adopted or made conditions of Project approval.

4.2 Mitigation Monitoring and Reporting Program Table

Mitigation Measure	Implementation Timing	Agency Responsible for Monitoring	Initials	Date
Air Quality				
MM-AQ-1. The Project shall implement the following measures in order to reduce operational off-road equipment and on-road vehicle air pollutant emissions to the extent feasible: ▪ All cargo handling equipment (including yard trucks, hostlers, yard goats, pallet jacks, forklifts, and landscaping equipment) shall be zero-emission equipment. Each building shall include the necessary charging stations or other necessary infrastructure for cargo handling equipment. The building manager or their designee shall be responsible for enforcing these requirements. ▪ Prior to tenant occupancy, the Project Applicant or successor in interest shall provide documentation to the City of Hesperia demonstrating that occupants/tenants of the Project site have been provided documentation on funding opportunities, such as the Carl Moyer Program, that provide incentives for using cleaner-than-required engines and equipment. ▪ Prior to certificate of occupancy, install conduit and infrastructure for Level 2 (or faster) electric vehicle charging stations on-site for employees for the percentage of employee parking spaces commensurate with Title 24 requirements in effect at the time of building permit issuance plus additional charging stations equal to 5% of the total employee parking spaces in the building permit, whichever is greater. By 2030 install Level 2 (or faster) electric vehicle charging stations for 25% of the employee parking spaces required.	Prior to the issuance of an occupancy permit	City of Hesperia		

Mitigation Measure	Implementation Timing	Agency Responsible for Monitoring	Initials	Date
▪ Conduit shall be installed to tractor trailer parking areas in logical locations determined by the Project Applicant during construction document plan check, for the purpose of accommodating the future installation of electric truck charging stations at such time this technology becomes commercially available. ▪ In anticipation of a transition to zero emissions truck fleets during the lifetime of the Project, install at least four heavy-duty truck vehicle charging stations on-site by 2030. ▪ Cold storage operations shall be prohibited unless additional environmental review, including a Health Risk Assessment, is conducted and certified pursuant to the California Environmental Quality Act. ▪ Include contractual language in tenant lease agreements requiring that any facility operator shall: - For occupants with more than 250 employees, require the establishment of a transportation demand management program to reduce employee commute vehicle emissions; - Place legible, durable, weather-proof signs at truck access gates, loading docks, and truck parking areas that identify applicable CARB anti-idling regulations. At a minimum, each sign shall include: (1) instructions for truck drivers to shut off engines when not in use; (2) instructions for drivers of diesel trucks to restrict idling to no more than 5 minutes once the vehicle is stopped, the transmission is set to “neutral” or “park,” and the parking brake is engaged; and (3) telephone numbers of the building facilities manager and CARB to report violations. Prior to the issuance of an occupancy permit, the City of Hesperia shall conduct a site inspection to ensure that the signs are in place; - Ensure that site enforcement staff in charge of keeping the daily log and monitoring for excess idling will be trained/certified in diesel health effects and technologies, for example, by requiring attendance at CARB-approved courses (such as the free, one-day Course #512);				

Mitigation Measure	Implementation Timing	Agency Responsible for Monitoring	Initials	Date
- Be required to train managers and employees on efficient scheduling and load management to eliminate unnecessary queuing and idling of trucks. The building manager or their designee shall be responsible for enforcing these requirements; - Be in, and monitor compliance with, all current air quality regulations for on-road trucks including CARB's Heavy-Duty (Tractor-Trailer) Greenhouse Gas Regulation, Periodic Smoke Inspection Program (PSIP), and the Statewide Truck and Bus Regulation.				
Biological Resources				
MM-BIO-1. Western Joshua Tree Fee Payment. Mitigation for direct impacts to 848 western Joshua tree individuals and indirect impacts to 73 western Joshua tree individuals shall be fulfilled through payment of the elected fees as described in Section 1927.3 of the Western Joshua Tree Conservation Act. In conformance with the fee schedule, mitigation shall consist of payment of $2,500 for each western Joshua tree 5 meters or greater in height, $500 for each tree 1 meter or greater but less than 5 meters in height, and $340 for each western Joshua tree less than 1 meter in height. The California Department of Fish and Wildlife (CDFW) shall determine the final fee, and may charge fees for indirect impacts to western Joshua trees. Alternatively, mitigation shall occur through off-site conservation or through a CDFW approved mitigation bank, or as required by a Section 2081 Incidental Take Permit, if received. Other local regulations (i.e., Hesperia Municipal Code Chapter 16.24 and San Bernardino County Development Code Chapter 88.01) also require permitting or notification prior to removal of western Joshua trees. Therefore, the Project must submit an application to the City of Hesperia prior to the removal or relocation of western Joshua trees in accordance with Hesperia Municipal Code Chapter 16.24, Protected Plant Policy. Additionally, the Project Applicant shall submit an application for a Tree or Plant Removal Permit for all western Joshua trees to be removed in compliance with San	Prior to issuance of grading permits	City of Hesperia		

Mitigation Measure	Implementation Timing	Agency Responsible for Monitoring	Initials	Date
Bernardino County Development Code Chapter 88.01.050 prior to the issuance of grading permits.				
MM-BIO-2. Removal Permit for Desert Native Plants. Prior to the issuance of grading permits, the Project Applicant shall submit an application and applicable fee paid to the City of Hesperia for removal of protected native desert plants under Hesperia Municipal Code Chapter 16.24, and shall schedule a pre-construction site inspection with the Planning Division and the Building Division. The application shall include certification from a qualified western Joshua tree and native desert plant expert to show that proposed removal or relocation of protected native desert plants are appropriate, supportive of a healthy environment, and in compliance with the Hesperia Municipal Code. Protected plants subject to Hesperia Municipal Code Chapter 16.24 may be relocated on site and incorporated into the on-site landscaping or within a designated storage area for plants to be adopted later. Per direction from the City of Hesperia, compliance with state policy (i.e., the Western Joshua Tree Conservation Act) and procurement of a native plant removal permit from the City of Hesperia would meet the requirements of Hesperia Municipal Code Chapter 16.24 to protect, preserve, and mitigate impacts to desert native plants, including western Joshua trees.	Prior to issuance of grading permits	City of Hesperia		
MM-BIO-3. Designated Biologist Authority. The designated biologist shall have authority to immediately stop any activity that does not comply with the biological resources mitigation measures and/or to order any reasonable measure to avoid the unauthorized take of an individual western Joshua tree.	During construction	City of Hesperia		
MM-BIO-4. Compliance Monitoring. The designated biologist shall be on site daily when impacts occur. The designated biologist shall conduct compliance inspections to minimize incidental take of western Joshua trees and impacts to other sensitive biological resources; prevent unlawful take of western Joshua trees; and ensure that signs, stakes, and fencing are intact and that impacts are only occurring within the permitted impact footprint. Weekly	During construction	City of Hesperia		

Mitigation Measure	Implementation Timing	Agency Responsible for Monitoring	Initials	Date
written observation and inspection records that summarize oversight activities, compliance inspections, and monitoring activities required by the Incidental Take Permit shall be prepared.				
MM-BIO-5. Education Program. An education program (Worker Environmental Awareness Program [WEAP]) for all persons employed or otherwise working in the Project area shall be administered before performing impacts. The WEAP shall consist of a presentation from the designated biologist that includes a discussion of the biology and status of western Joshua trees, burrowing owls, loggerhead shrikes, and other biological resources mitigation measures described in the California Environmental Quality Act document. Interpretation for non-English-speaking workers shall be provided, and the same instruction shall be provided to all new workers before they are authorized to perform work in the Project area. Upon completion of the WEAP, employees shall sign a form stating they attended the program and understand all protection measures. This training shall be repeated at least once annually for long-term and/or permanent employees who will be conducting work in the Project area.	During construction	City of Hesperia		
MM-BIO-6. Construction Monitoring Notebook. The designated biologist shall maintain a construction monitoring notebook on site throughout the construction period that shall include a copy of the biological resources mitigation measures with attachments and a list of signatures of all personnel who have successfully completed the education program. The permittee shall ensure that a copy of the construction monitoring notebook is available for review at the Project site upon request by the California Department of Fish and Wildlife.	During construction	City of Hesperia		
MM-BIO-7. Delineation of Property Boundaries. Before beginning activities that would cause impacts, the contractor shall, in consultation with the designated biologist, clearly delineate the boundaries with fencing, stakes, or flags, consistent with the grading plan, within which Project impacts will take place. All impacts outside the fenced, staked, or flagged areas shall be avoided, and	Prior to issuance of grading permits	City of Hesperia		

Mitigation Measure	Implementation Timing	Agency Responsible for Monitoring	Initials	Date
all fencing, stakes, and flags shall be maintained until the completion of impacts in that area.				
MM-BIO-8. Hazardous Waste. The Project Applicant shall immediately stop work and, pursuant to pertinent state and federal statutes and regulations, arrange for repair and clean up by qualified individuals of any fuel or hazardous waste leaks or spills at the time of occurrence, or as soon as it is safe to do so.	During construction	City of Hesperia		
MM-BIO-9. Herbicides. The Project Applicant shall limit herbicide use for invasive plant species and shall use herbicides only if it has been determined that hand or mechanical efforts are infeasible. To prevent drift, the permittee shall apply herbicides only when wind speeds are less than 7 miles per hour. All herbicide application shall be performed by a licensed applicator and in accordance with all applicable federal, state, and local laws and regulations.	During construction	City of Hesperia		
MM-BIO-10. Pre-Construction Surveys for Burrowing Owl and Avoidance. One pre-construction burrowing owl survey shall be completed no more than 14 days before initiation of site preparation or grading activities, and a second survey shall be completed within 24 hours of the start of site preparation or grading activities. If ground-disturbing activities are delayed or suspended for more than 30 days after the pre-construction surveys, the Project site shall be resurveyed. Surveys for burrowing owl shall be conducted in accordance with protocols established in the California Department of Fish and Wildlife's 2012 (or most recent version) Staff Report on Burrowing Owl Mitigation. If burrowing owls are detected, the Burrowing Owl Relocation Plan shall be implemented in consultation with the California Department of Fish and Wildlife (CDFW). As required by the Burrowing Owl Relocation Plan, disturbance to burrows shall be avoided during the nesting season (February 1 through August 31). Buffers shall be established around occupied burrows in accordance with guidance provided in CDFW's Staff Report on Burrowing Owl Mitigation. No Project activities shall be allowed to encroach into established buffers without the consent of a monitoring biologist. The buffer	**First survey** No more than 14 days before initiation of site preparation or grading activities **Second survey** Within 24 hours of the start of site preparation or grading activities	City of Hesperia		

Mitigation Measure	Implementation Timing	Agency Responsible for Monitoring	Initials	Date
shall remain in place until it is determined that occupied burrows have been vacated or the nesting season has completed. Outside of the nesting season, passive owl relocation techniques shall be implemented. Owls shall be excluded from burrows in the immediate Project area and within a buffer zone by installing one way doors in burrow entrances. These doors shall be placed at least 72 hours prior to ground disturbing activities. The Project site shall be monitored daily for 1 week to confirm owl departure from burrows prior to any ground-disturbing activities. Compensatory mitigation for permanent loss of owl habitat shall be provided following the guidance in CDFW's Staff Report on Burrowing Owl Mitigation. Where possible, burrows shall be excavated using hand tools and refilled to prevent reoccupation. Sections of flexible plastic pipe shall be inserted into the tunnels during excavation to maintain an escape route for any wildlife inside the burrow. An endoscope (fiber optic camera) shall also be used to scope the burrow in front of the excavation. Occupied burrows that are excavated shall be replaced at a 2:1 ratio if there are already suitable burrows present nearby. Should burrowing owl be located during the clearance survey, the Project would result in the loss of 20.9 acres of suitable habitat for burrowing owl. Mitigation for direct impacts to 20.9 acres shall be fulfilled through conservation of suitable burrowing owl habitat through the purchase of credits at a minimum of 1:1 in-kind habitat replacement of equal or better functions and values to those impacted by the Project, for a total of 20.9 acres.				
MM-BIO-11. Restoration of Temporary Impacts. Site construction areas subjected to temporary ground disturbance from the off-site improvement areas shall be recontoured to natural grade (if the grade was modified during the temporary disturbance activity). The Project does not include revegetation or restoration of temporary impacts after Project completion. However, natural vegetation will be allowed to regenerate in temporary disturbed areas. Furthermore, if topsoil is removed during construction, the segregated topsoil will be	During construction	City of Hesperia		

Mitigation Measure	Implementation Timing	Agency Responsible for Monitoring	Initials	Date
replaced, and the native seed will be allowed to regenerate naturally. This measure does not apply to areas that are urban/developed that are temporarily impacted and will be returned to an urban/developed land use.				
MM-BIO-12. Pre-Construction Nesting Bird Surveys and Avoidance. Construction activities shall avoid the migratory bird nesting season (typically February 1 through August 31) to reduce any potential significant impact to birds that may be nesting in the biological survey area. If construction activities must occur during the migratory bird nesting season, an avian nesting survey of the Project site and within 500 feet of all impact areas must be conducted to determine the presence/absence of protected migratory birds and active nests. The avian nesting survey shall be performed by a qualified wildlife biologist within 72 hours prior to the start of construction in accordance with the Migratory Bird Treaty Act and California Fish and Game Code Sections 3503, 3503.5, and 3513. If an active bird nest is found, the nest shall be flagged and mapped on the construction plans, along with an appropriate buffer established around the nest, which shall be determined by the biologist based on the species' sensitivity to disturbance (typically 300 feet for passerines and 500 feet for raptors and special-status species). The nest area shall be avoided until the nest is vacated and the juveniles have fledged. The nest area shall be demarcated in the field with flagging and stakes or construction fencing. On-site construction monitoring shall be conducted when construction occurs in close proximately to an active nest buffer. No Project activities shall encroach into established buffers without the consent of a monitoring biologist. The buffer shall remain in place until is determined that the nestlings have fledged and the nest is no longer active.	Within 72 hours prior to the start of construction	City of Hesperia		
MM-BIO-13. Trash and Debris. The following avoidance and minimization measures shall be implemented during Project construction**:**	During construction	City of Hesperia		

Mitigation Measure	Implementation Timing	Agency Responsible for Monitoring	Initials	Date
▪ Fully covered trash receptacles that are animal-proof shall be installed and used by the operator to contain all food, food scraps, food wrappers, beverage containers, and other miscellaneous trash. Trash contained within the receptacles shall be removed at least once a week from the Project site. ▪ Construction work areas shall be kept clean of debris, such as cable, trash, and construction materials. All construction/contractor personnel shall collect all litter, vehicle fluids, and food waste from the Project site on a daily basis.				
MM-BIO-14. Lighting. Lighting for construction activities and operations within 50 feet of the outside edge of the impact footprint containing habitat for special-status wildlife shall be directed away from natural areas	During construction	City of Hesperia		
MM-BIO-15. Invasive Plant Management. To reduce the spread of invasive plant species, landscape plants within 200 feet of native vegetation communities shall not be on the most recent version of the California Invasive Plant Council's Inventory of Invasive Plants (http://www.cal-ipc.org/ip/inventory/index.php). Post-construction, the Project Applicant shall continually remove invasive plant species on site by hand or mechanical methods, as feasible.	After construction	City of Hesperia		
Cultural, Tribal Cultural, and Paleontological Resources				
MM-CUL-1. Workers Environmental Awareness Program (WEAP) Training. All construction personnel and monitors who are not trained archaeologists should be briefed regarding unanticipated discoveries prior to the start of construction activities. A basic presentation should be prepared and presented by a qualified archaeologist to inform all personnel working on the Project about the archaeological sensitivity of the area. The purpose of the WEAP training is to provide specific details on the kinds of archaeological materials that may be identified during construction of the Project and explain the importance of and legal basis for the protection of significant archaeological resources. Each worker should also learn the proper procedures to follow in the event that cultural resources or human remains are uncovered during ground-disturbing activities.	Prior to the start of construction activities	City of Hesperia		

Mitigation Measure	Implementation Timing	Agency Responsible for Monitoring	Initials	Date
These procedures include work curtailment or redirection, and the immediate contact of the on-call archaeologist and if appropriate, Tribal representative. Necessity of training attendance should be stated on all construction plans.				
MM-CUL-2. On-Call Archaeological Construction Monitoring. A qualified archaeologist, meeting the Secretary of the Interior's Professional Qualification Standards, should be retained to provide conditional monitoring as well as on call response in the case of an inadvertent discovery of archaeological resources. The qualified archaeologist should oversee and adjust monitoring efforts as needed (increase, decrease, or discontinue monitoring frequency) based on the observed potential for construction activities to encounter cultural deposits. The monitoring archaeologist should be responsible for maintaining monitoring logs as appropriate. Following the completion of construction, the qualified archaeologist should provide an archaeological monitoring report to the lead agency and the SCCIC with the results of the cultural monitoring program.	During grading phases and following the completion of construction	City of Hesperia		
MM-CUL-3. Inadvertent Discovery of Archaeological Resources. In the event that archaeological resources (sites, features, or artifacts) are exposed during construction activities for the Project, all construction work occurring within 100 feet of the find should immediately stop until a qualified archaeologist, meeting the Secretary of the Interior's Professional Qualification Standards, can evaluate the significance of the find and determine whether or not additional study is warranted. Depending upon the significance of the find under the California Environmental Quality Act (14 CCR 15064.5[f]; California PRC Section 21082), the archaeologist may simply record the find and allow work to continue. If the discovery proves significant under CEQA, additional work, such as preparation of an archaeological treatment plan, testing, or data recovery, may be warranted. If the discovery is Native American in nature, consultation with and/or monitoring by a Tribal representative may be necessary.	During construction	City of Hesperia		

Mitigation Measure	Implementation Timing	Agency Responsible for Monitoring	Initials	Date
MM-CUL-4. Inadvertent Discovery of Human Remains. In accordance with Section 7050.5 of the California Health and Safety Code, if human remains are found, the county coroner shall be immediately notified of the discovery. No further excavation or disturbance of the site or any nearby area reasonably suspected to overlie adjacent remains shall occur until the county coroner has determined the appropriate treatment and disposition of the human remains. If the county coroner determines that the remains are, or are believed to be, Native American, he or she shall follow all required protocols according to California Public Resources Code, Section 5097.98.	During construction activities	City of Hesperia		
MM-CUL-5. Treatment of Tribal Cultural Resources During Project Implementation. If a pre-contact tribal cultural resource is discovered during Project implementation, ground-disturbing activities shall be suspended 60 feet around the resource(s), and an Environmentally Sensitive Area (ESA) physical demarcation/barrier constructed. The Principal Investigator/Archeologist shall develop a research design that shall include a plan to evaluate the resource for significance under CEQA criteria. Representatives from the Consulting Tribe, the Principal Investigator/Archaeologist, and the Lead Agency shall confer regarding the research design, as well as any testing efforts needed to delineate the resource boundary. Following the completion of evaluation efforts, all parties shall confer regarding the resource's archaeological significance, its potential as a Tribal Cultural Resource (TCR), and avoidance (or other appropriate treatment) of the discovered resource. N**OTE:** It is the preference of the Consulting Tribe YSMN that removed cultural material be reburied as close to the original find location as possible. However, should reburial within/near the original find location during Project implementation not be feasible, then a reburial location for future reburial shall be decided upon by the Consulting Tribe, the landowner, and the Lead Agency, and all finds shall be reburied within this location. Additionally, in this case, reburial shall not occur until all ground-disturbing activities	During Project implementation	City of Hesperia		

Mitigation Measure	Implementation Timing	Agency Responsible for Monitoring	Initials	Date
associated with the Project have been completed, all monitoring has ceased, all cataloging and basic recordation of cultural resources have been completed, and a final monitoring report has been issued to Lead Agency, CHRIS, and the Consulting Tribe. All reburials are subject to a reburial agreement that shall be developed between the landowner and Consulting Tribe outlining the determined reburial process/location and shall include measures and provisions to protect the reburial area from any future impacts. Should it occur that avoidance, preservation in place, and on-site reburial are not an option for treatment, the landowner shall relinquish all ownership and rights to the TCR material(s) and confer with Consulting Tribe to identify an American Association of Museums (AAM)-accredited facility within the County that can accession the materials into their permanent collections and provide for the proper care of these objects in accordance with the 1993 California Curation Guidelines. A curation agreement with an appropriate qualified repository shall be developed between the landowner and museum that legally and physically transfers the collections and associated records to the facility. This agreement shall stipulate the payment of fees necessary for permanent curation of the collections and associated records and the obligation of the Project developer/applicant to pay for those fees. All draft records/reports containing the significance and treatment findings and data recovery results shall be prepared by the Principal Investigator/Archaeologist and submitted to the Lead Agency and Consulting Tribe for their review and comment. After approval from all parties, the final reports and site/isolate records are to be submitted to the local CHRIS Information Center, the Lead Agency, and Consulting Tribe.				
MM-CUL-6. Prior to commencement of any grading activity on-site, the Project Applicant shall retain a qualified paleontologist per the Society of Vertebrate Paleontology (SVP) (2010) guidelines. The paleontologist shall prepare a Paleontological Resources Impact Mitigation Program (PRIMP) for the Project. The PRIMP shall be	Prior to commencement of any grading activity on-site	City of Hesperia		

Mitigation Measure	Implementation Timing	Agency Responsible for Monitoring	Initials	Date
consistent with the SVP (2010) guidelines and should outline requirements for preconstruction meeting attendance and worker environmental awareness training, where monitoring is required within the proposed Project area based on construction plans and/or geotechnical reports, procedures for adequate paleontological monitoring and discoveries treatment, and paleontological methods (including sediment sampling for microvertebrate fossils), reporting, and collections management. The qualified paleontologist shall attend the preconstruction meeting and a qualified paleontological monitor shall be on site during all rough grading and other significant ground-disturbing activities (including augering) in previously undisturbed, fine-grained Pleistocene alluvial deposits. In the event that paleontological resources (e.g., fossils) are unearthed during grading, the paleontological monitor will temporarily halt and/or divert grading activity to allow recovery of paleontological resources. The area of discovery will be roped off with a 50-foot radius buffer. Once documentation and collection of the find is completed, the monitor will remove the rope and allow grading to recommence in the area of the find.				
Greenhouse Gas Emissions				
MM-GHG-1. The Project shall implement the following measure in order to reduce operational energy source GHG emissions to the extent feasible: ▪ Commit to on-site solar generation sufficient to meet at least 75% of the Project's total operational energy requirements from within the building envelope. ▪ Install Energy Star-rated heating, cooling, lighting, and appliances. ▪ Provide information on energy efficiency, energy-efficient lighting and lighting control systems, energy management, and existing energy incentive programs to future tenants of the Project.	Prior to the issuance of building permits	City of Hesperia		

Mitigation Measure	Implementation Timing	Agency Responsible for Monitoring	Initials	Date
▪ Structures shall be equipped with outdoor electric outlets in the front and rear of the structures to facilitate use of electrical lawn and garden equipment.				
MM-GHG-2. In order to reduce the amount of waste disposed at landfills, the Project would implement a 75% waste diversion program. Prior to the issuance of building permits for the Project, the Project Applicant shall provide building plans that include the following solid waste reduction measures: ▪ Provide storage areas for recyclables and green waste in new construction, and food waste storage, if a pick-up service is available. ▪ Evaluate the potential for on-site composting.	Prior to the issuance of building permits	City of Hesperia		
MM-GHG-3. To reduce water demands and associated energy use, subsequent development proposals within the Project site would be required to implement a Water Conservation Strategy and demonstrate a minimum 20% reduction in indoor and outdoor water usage when compared to baseline water demand (total expected water demand without implementation of the Water Conservation Strategy). Prior to the issuance of building permits for the Project, the Project Applicant shall provide building plans that include the following water conservation measures: ▪ Install low-water use appliances and fixtures. ▪ Restrict the use of water for cleaning outdoor surfaces and prohibit systems that apply water to non-vegetated surfaces. ▪ Implement water-sensitive urban design practices in new construction. ▪ Install rainwater collection systems where feasible.	Prior to the issuance of first occupancy permit	City of Hesperia		
Hazards and Hazardous Materials				
MM-HAZ-1. Prior to the issuance of a grading permit, the Project Applicant shall retain a qualified environmental specialist that has documented experience in the identification, characterization, and removal of hazardous materials, such as a California licensed professional engineer, geologist, or hydrogeologist, to remove and	Prior to issuance of a grading permit and during construction	City of Hesperia		

Mitigation Measure	Implementation Timing	Agency Responsible for Monitoring	Initials	Date
dispose of all refuse located on the Project site, including but not limited to, the illegally dumped tires and debris currently found on site. The removal, transport, and disposal of refuse shall be done in accordance with all applicable local, state, and federal guidelines related to hazardous materials handling. Prior to the removal of refuse deposits from the site, the environmental specialist shall inspect each refuse pile for indications that the refuse may contain, or may have once contained, hazardous materials, including, but not limited to, motor oil, solvents, paints, and/or other petroleum products. In addition, the environmental specialist shall inspect the soils surrounding each refuse deposit for evidence of any contamination (staining) or volatilization of contaminants (odors). If contamination indicators are identified, work shall stop in the immediate proximity of the potential contamination. The Project Applicant and/or their construction contractor shall be responsible for engaging a qualified environmental specialist to design and perform an investigation to verify the presence and extent of contamination on the Project site. Subsurface investigation shall determine appropriate worker protection and hazardous material and disposal procedures appropriate for the Project site. Contaminated soil or groundwater determined to have contamination above applicable regulatory screening levels (e.g. Environmental Screening Levels (SFBRWQCB 2019)) the environmental specialist shall prepare a plan for groundwater extractions, soil excavation, control of contaminant releases to the air, and off-site transport or on-site treatment (Plan). The Plan will be submitted to the permitting agency for review and approval; once approved, the plan will be executed on the project site to address identified contamination.				
Transportation				
MM-TRANS-1. The following Transportation Demand Management (TDM) measures have the potential to reduce commute VMT, although no quantified benefit is taken at this time. The following measures shall be implemented to their extent feasible:	During Project implementation	City of Hesperia		

Mitigation Measure	Implementation Timing	Agency Responsible for Monitoring	Initials	Date
▪ Provide designated carpool/vanpool parking in desirable locations to encourage employees to carpool/vanpool to work that can lead to reduced commute VMT depending on the level of participation by tenants. ▪ Provide end-of-trip facilities such as bicycle parking, lockers, etc., which could encourage employees to use alternative modes of transportation and thus reduce VMT. Provide sidewalks along Project frontage providing connections to existing trails and external pedestrian networks in order to improve pedestrian access. This measure could encourage employees to walk to nearby destinations and thus reduce VMT.				

INTENTIONALLY LEFT BLANK

Appendix A
Comment Letters

Mojave Water Agency

June 17, 2025

Leilani Henry, Assistant Planner
City of Hesperia, Planning Department
9700 Seventh Ave.
Hesperia, CA. 92345

Regarding: Phelan Project 20

Dear Leilani,

This confirms that the Mojave Water Agency has no conflict with this project. 1-1

Sincerely,
Christy Huiner
Senior Water Resource Analyst
Mojave Water Agency
chuiner@mojavewater.org
760-946-7066

13846 Conference Center Drive
Apple Valley, CA 92307
Phone: (760) 946-7000 | Fax: (760) 240-2642
WWW.MOJAVEWATER.ORG

Southern California Edison

SOUTHERN CALIFORNIA EDISON®
An EDISON INTERNATIONAL® Company

City of Hesperia,
9700 Seventh Ave.
Hesperia, CA 92345

July 2, 2025

Attention: Planning Department

Subject: Phelan 20 Project
APN: 3064-531-06 & 3064-531-07

Our review of the subject subdivision map reveals that the proposed development may interfere with easement rights, and/or facilities held by Southern California Edison within the subdivision boundaries. Until such time as arrangements have been made with the developer to eliminate this interference, the development of the subdivision may unreasonably interfere with the complete and free exercise of Edison's rights.

One copy of the following maps with scaled plans (1"=50' maximum), including all maps submitted in hard copies or emailed in pdf format: including grading, drainage, landscape and street improvement plans are required to be submitted by the developer to determine the extent of the interference. The Edison facilities and the easements should be plotted on the above reference maps. Included with the above referenced plans, the developer must state the proposed method to eliminate any interference. Plans should be forwarded to my attention at the following email address:

Jennifer.Farley@sce.com

2-1

If you have any questions or need additional information in connection with the subject subdivision, please contact me at (909) 274-1078.

2-2

Jeff Clark
Title and Valuation
Real Properties

cc:

Mojave Desert Air Quality Management District

Mojave Desert Air Quality Management District
Brad Poiriez, *Executive Director*
14306 Park Avenue, Victorville, CA 92392-2310
760.245.1661 • Fax 760.245.2022
www.MDAQMD.ca.gov • @MDAQMD

July 15, 2024

Edgar Gonzales
City of Hesperia, Planning Department
9700 Seventh Avenue
Hesperia, CA 92345

Project: Phelan 20 Project

Dear Mr. Gonzales:

The Mojave Desert Air Quality Management District (District) has reviewed the Draft Environmental Impact Report (DEIR) for the proposed Phelan 20 Project in Hesperia. The Project would include construction of an industrial/warehouse building and associated improvements on approximately 22.61 acres of vacant land, 22.14 acres would consist of on-site impacts and 0.47 acres would consist of off-site improvements. The Project would provide 419,840 square feet of industrial/warehouse building and include associated improvements, including loading docks, truck and vehicle parking, landscaped areas, and an 8-foot tube steel fence along the eastern, western, and southern boundaries of Project site. It is anticipated that the facilities would be operated 24 hours a day, 7 days a week. At this time, the Project Applicant does not anticipate leasing any portion of the building to a tenant that would require refrigerated space.

3-1

The District requires that the following dust mitigation measures be required for the construction portion of the development (enforceable by the District AND by the land use agency) should the project be approved:

- Prepare and submit to the MDAQMD, prior to commencing earth-moving activity, a dust control plan that describes all applicable dust control measures that will be implemented at the project;
- Signage compliant with Rule 403 Attachment B shall be erected at each project site entrance not later than the commencement of construction.
- Use a water truck to maintain moist disturbed surfaces and actively spread water during visible dusting episodes to minimize visible fugitive dust emissions. For projects with exposed sand or fines deposits (and for projects that expose such soils through earthmoving), chemical stabilization or covering with a stabilizing layer of gravel will be required to eliminate visible dust/sand from sand/fines deposits.

3-2

- All perimeter fencing shall be wind fencing or the equivalent, to a minimum of four feet of height or the top of all perimeter fencing. The owner/operator shall maintain the wind fencing as needed to keep it intact and remove windblown dropout. This wind fencing requirement may be superseded by local ordinance, rule or project-specific biological mitigation prohibiting wind fencing.

- All maintenance and access vehicular roads and parking areas shall be stabilized with chemical, gravel or asphaltic pavement sufficient to eliminate visible fugitive dust from vehicular travel and wind erosion. Take actions to prevent project-related trackout onto paved surfaces, and clean any project-related trackout within 24 hours. All other earthen surfaces within the project area shall be stabilized by natural or irrigated vegetation, compaction, chemical or other means sufficient to prohibit visible fugitive dust from wind erosion.

- Obtain District permits for any miscellaneous process equipment that may not be exempt under District Rule 219 including, but not limited to: Internal Combustion Engines with a manufacture's maximum continuous rating greater than 50 brake horsepower.

3-2 Cont.

If you have any questions regarding this letter, please contact me at (760) 245-1661, extension 1846, or Bertrand Gaschot at extension 4020.

3-3

Sincerely,

Chris Anderson
Planning and Air Monitoring Supervisor

CA/bg Hesp Phelan 20 Project 2025 15 July

CALIFORNIA STATE TRANSPORTATION AGENCY GAVIN NEWSOM, GOVERNOR

California Department of Transportation

DISTRICT 8
464 WEST 4TH STREET
SAN BERNARDINO CA, 92401
(909) 963-8604
www.dot.ca.gov

July 29, 2025

Route & Postmile #: SR-395/R5.479
Cross Street: Phelan Rd & Los Banos Ave.
GTS ID: 36753

City of Hesperia
Planning Division
Attn: Leilani Henry
9700 Seventh Avenue,
Hesperia, CA, 92345

Subject: Comments for the Initial Study Mitigated Negative Declaration (IS/MND)—Phelan 20 Project

The California Department of Transportation (Caltrans), District 8, Local Development Review (LDR) branch, has completed its review of the Initial Study/Mitigated Negative Declaration (IS/MND) and related documents for the proposed Phelan 20 Project.

The proposed project involves the construction of a 419,840-square-foot industrial warehouse with 5,000 square feet of space on a 19.2-acre site located along Phelan Road in unincorporated San Bernardino County. The project includes associated improvements such as loading docks, truck and passenger vehicle parking, stormwater basins, and landscaping, with a maximum building height of 50 feet and a net floor area ratio of 53.1%. Off-site improvements include frontage landscaping, pedestrian facilities, and the extension of New Caliente Road south from Phelan Road. The project is expected to generate truck and employee trips that may impact nearby intersections and the State Highway System, warranting a Transportation Impact Analysis. Construction is anticipated to occur over 12 to 18 months following approval of the Conditional Use Permit.

4-1

Based on the information provided in the environmental documents made available for public review, we are submitting the following comments and recommendations for your consideration.

General:

1. Please include responses to the comments in this memorandum for your next review submittal.
2. Add a PE stamp on Appendix I—Transportation Technical Memo.

4-2

Safety Reviews:

3. The proposed project will generate additional trips on the State Highway System, provide a Safety Analysis Report for the intersection of Phelan Rd and US 395. The Safety Analysis

Report shall follow the attached guidance. See the attached guidance: Local Development Review (LDR) Safety Review Practitioner's Guidance. Please follow the steps below:

a. To request crash data on the State Highway System, please submit your request via our California Public Records Act (CPRA) portal at mycusthelp.com.
b. Please analyze the existing crash data and discuss project's impact on safety as needed.
c. Provide appropriate countermeasures to mitigate/reduce project's impact as needed.

4-2 Cont.

Traffic Analysis Report:

4. Please provide a Traffic Impact Analysis report with the items below:
    a. Provide a figure to show the proposed project's trip distribution. 4-3
    b. Include discussion on the type of trucks this facility will service and provide truck turning templates for the intersection of Phelan Rd/US-395. 4-4
    c. Perform a queuing analysis for the intersection of Phelan Rd/US-395 and any additional locations that will generate additional trips on the State Highway System. 4-5
        i. Please provide traffic data to support the queuing analysis. 4-6
        ii. Please provide queuing analysis for the existing conditions, opening year, and horizon year. 4-7 4-8
    d. Please include the traffic impacts from nearby pending projects that may affect your development. Consult with the leading agency for the status and information on these projects. 4-9
5. *Appendix I Transportation Memo, Section 2.1 (Roadway Network), p. 4 states that* "The posted speed mile is 65 miles per hour (MOH)"—Please Verify this speed limit. 4-10
6. *Appendix I Transportation Tech Memo, Section 2.1 (Roadway Network), p. 4 mentions that* "The City of Hesperia classifies Phelan Road as a major arterial roadway, and a truck route west of US Hwy 395"—In the provided figure below, Phelan Rd is a proposed truck route. Please clarify whether Phelan Rd is already a truck route or will be a truck route. 4-11

Equitable Access

If any Caltrans facilities are impacted by the project, they must comply with the American Disabilities Act (ADA) Standards upon project completion. Additionally, the project must ensure the maintenance of bicycle and pedestrian access throughout the construction phase. These access considerations align with Caltrans' equity mission to provide a safe, sustainable, and equitable transportation network for all users. 4-12

Caltrans Encroachment Permit

Please be advised that any permanent work or temporary traffic control that encroaches onto Caltrans' Right-of-Way (R/W) requires a Caltrans-issued encroachment permit.

For information regarding the Encroachment Permit application and submittal requirements, contact: 4-13

Caltrans Office of Encroachment Permits
464 West 4th Street, Basement, MS 619
San Bernardino, CA 92401-1400
(909) 383-4526
D8.E-permits@dot.ca.gov
https://dot.ca.gov/programs/traffic-operations/ep

Important Note: All permit applications must now be submitted through our CEPS Online Portal at: https://ceps.dot.ca.gov/

4-13 Cont.

Currently, no further review from the Local Development Review (LDR) Branch is required. Please be advised that LDR's point of contact role will conclude upon the completion of the development entitlement process. Once the project is entitled, the Encroachment Permit Office will serve as the primary point of contact moving forward.

4-14

Thank you again for including Caltrans in the review process. Should you have any questions regarding this letter, or for future notifications and requests for review of new projects, please email LDR-D8@dot.ca.gov or call 909-963-8604.

Sincerely,

4-15

Janki Patel

Janki Patel
Branch Chief - Local Development Review
Division of Transportation Planning
Caltrans District 8

Golden State Environmental Justice Alliance
Green Jobs & Clean Communities
P.O. Box 79222
Corona, CA 92877

October 8, 2025
Leilani Henry
Associate Planner
City of Hesperia
lhenry@hesperiaca.gov

Re: Phelan 20 Project, SCH No. 2024020980

Dear Ms. Henry:

On behalf of the Golden State Environmental Justice Alliance ("GSEJA"), I am writing to you regarding the Phelan 20 Project, SCH No. 2024020980 ("Project").

GSEJA is withdrawing its comment letter on and opposition to the Project. The Project's developer has addressed GSEJA's concerns about environmental mitigation.

Golden State Environmental Justice Alliance

Joe Bourgeois
Executive Director

BLUM, COLLINS & HO LLP
ATTORNEYS AT LAW
10250 CONSTELLATION BOULEVARD
SUITE 2300
LOS ANGELES, CALIFORNIA 90067
(213) 572-0400

July 30, 2025

Leilani Henry
Assistant Planner
Planning Department, City of Hesperia
9700 Seventh Avenue
Hesperia, CA 92345

Via Email to:
lhenry@hesperiaca.gov

Subject: Comments on Phelan 20 Project EIR (SCH NO. 2024020980)

Dear Ms. Henry,

Thank you for the opportunity to comment on the Environmental Impact Report (EIR) for the proposed Phelan 20 Project. Please accept and consider these comments on behalf of Golden State Environmental Justice Alliance. Also, Golden State Environmental Justice Alliance formally requests to be added to the public interest list regarding any subsequent environmental documents, public notices, public hearings, and notices of determination for this project. Send all communications to Golden State Environmental Justice Alliance P.O. Box 79222 Corona, CA 92877. 5-1

1.0 Summary

The project proposes the construction and operation of one 419,840 square foot (sf) industrial/warehouse building on a 19.2 acre site. The building consists of 414,840 sf of warehouse space, and 5,000 sf of office space. The building includes 62 truck/trailer loading dock doors, 57 truck/trailer parking stalls, and 199 passenger car parking stalls. 5-2

1.1 Project Piecemealing

The EIR does not accurately or adequately describe the project, meaning "the whole of an action, which has a potential for resulting in either a direct physical change in the environment, or a reasonably foreseeable indirect physical change in the environment" (CEQA § 15378). The project proposed by Phelan 20 is a piecemealed portion of a larger overall project to be developed within the City by the project applicant, Covington Group. The proposed project is preceded by at least four other industrial projects known as Hesperia Commerce Center I, Hesperia Commerce Center II, I-15 Industrial Park, and Poplar 18. Hesperia Commerce Center I (3.5 million square foot warehouse/distribution center) was approved by the Planning Commission on November 14, 5-3

2013[1] and the City Council on December 17, 2013[2]. Hesperia Commerce Center II (3,745,429 square foot warehouse/distribution center) was approved on May 17, 2022[3]. A Notice of Preparation of an EIR[4] for the I-15 Industrial Park (1,850,000 square foot warehouse/distribution center) was published on June 17, 2021 and the EIR was published for public review on July 20, 2022[5]. A Notice of Preparation of an EIR[6] for the Poplar 18 project (414,700 square foot warehouse/distribution center) was published on August 11, 2022 and the EIR was published for public review on November 30, 2022[7].

Including the proposed Phelan 20 project, these four piecemealed development projects will construct and operate approximately 9,929,969 sf of industrial warehousing. Notably, the Phelan 20 project is distinctly dependent on the improvements and utilities installed by the Hesperia Commerce Center II project immediately to the north of the project site across Phelan Avenue. Figure 3-12: Detailed Site Plan includes notes such as, "Signalized intersection per future project to the north," along Phelan Avenue and, "Sewer per development to the north." Phelan 20 is not an independent project and relies upon Hesperia Commerce Center II for intersection/street improvements and sewer, at minimum.

5-3 Cont.

CEQA Section 15161 describes project EIRs as examining "the environmental impacts of a specific development project. This type of EIR should focus primarily on the changes in the environment that would result from the development project. The EIR shall examine all phases of the project including planning, construction, and operation." The specific development project is the construction and operation of all Covington industrial buildings as a whole, including at minimum Hesperia Commerce Center I, Hesperia Commerce Center II, I-15 Industrial Park, Poplar 18, and Phelan 20.

Additionally, CEQA Section 15146 requires that the degree of specificity in an EIR "will correspond to the degree of specificity involved in the underlying activity which is described in the EIR. (a) An EIR on a construction project will necessarily be more detailed in the specific effects of the project than will be an EIR on the adoption of a local general plan or comprehensive zoning ordinance because the effects of the construction can be predicted with greater accuracy."

[1] November 14, 2013 PC Agenda http://www.cityofhesperia.us/ArchiveCenter/ViewFile/Item/1106
[2] December 17, 2013 CC Agenda http://www.cityofhesperia.us/ArchiveCenter/ViewFile/Item/1118
[3] Hesperia Commerce Center II Notice of Determination https://ceqanet.opr.ca.gov/2019110418/6
[4] I-15 Industrial Park EIR NOP https://files.ceqanet.opr.ca.gov/270818-1/attachment/QuD5mx5_AtDAvaQRMNzKedc9zqAyMkqt89ANZs4VE_maReuNGSHfFLsr0hE3DHNPLqYa1OQLwRCWS6hN0
[5] I-15 Industrial Park EIR NOA https://files.ceqanet.opr.ca.gov/270818-3/attachment/InJjVgv0dazvg5OCDXQ2C70BXYy60jPBxbrMz3hgKsNrNWAv_drSR7ZpLhEzdjKD3CBjT2krzE8_oZFQ0
[6] Poplar 18 EIR NOP https://ceqanet.lci.ca.gov/2022080248
[7] Poplar 18 EIR https://ceqanet.lci.ca.gov/2022080248/2

Because there are at least four developments as part of a single construction project, the project EIR must be more detailed in the specific effects of the project.

A project EIR must be prepared which accurately represents the whole of the action without piecemealing the project into separate, smaller development projects to present unduly low environmental impacts. This is vital as the EIR for Hesperia Commerce Center I found that the project will result in significant and unavoidable cumulatively considerable Air Quality and Greenhouse Gas Emissions impacts; Hesperia Commerce Center II will result in significant and unavoidable cumulatively considerable Air Quality, Noise, and Transportation impacts; I-15 Industrial Park will result in significant and unavoidable cumulatively considerable Air Quality, Greenhouse Gas Emissions, and Transportation impacts; the Poplar 18 project will result in significant and unavoidable cumulatively considerable Greenhouse Gas Emissions and Transportation impacts; and Phelan 20 will also result in significant and unavoidable cumulatively considerable Greenhouse Gas Emissions and Transportation impacts. The EIR must be revised to comply with CEQA § 15161 by preparing a Project EIR to adequately and accurately disclose the project-specific and cumulative impacts of all proposed Covington Group projects.

5-3 Cont.

3.0 Project Description

The EIR does not include a floor plan, detailed site plan, or detailed grading plan for the proposed project. The basic components of a Planning Application include a detailed site plan, floor plan, grading plan, and elevations. The site plan provided in Figure 3-12: Detailed Site Plan has been edited for public review and does not provide any detailed information such as the architectural notes, site data, and zoning conformance information. The edited version of the site plan inserted for public review is meaningless and provides no useful information. The grading plan provided in Figure 3-17: Conceptual Grading Plan does not include the earthwork quantity notes or section details. The EIR states that, "The site would not require the import or export of earthwork materials as on-site material would be balanced during the grading phase," and there is no method for the public or decision makers to verify this statement. The quantity of soil imported/exported from the project site contributes to the quantity of truck trips during the grading phase of construction and will increase project emissions. Providing a detailed, complete grading plan is vital to ensure that the public and decision makers can verify this information and for the EIR to provide an accurate environmental analysis. The EIR has excluded the detailed grading plan, floor plan, and detailed site plan and elevations in their whole and true forms from public review, which does not comply with CEQA's requirements for adequate informational documents and meaningful disclosure (CEQA § 15121 and 21003(b)). Incorporation by reference (CEQA § 15150 (f)) is not appropriate as the floor plan, grading plan, and detailed site plan contribute directly to analysis of the problem at hand. The EIR must be revised to include all application items for review, analysis, and comment by the public and decision makers in their whole and true form in order to provide an adequate and accurate environmental analysis.

5-4

Additionally, Figure 3-8: Main Street and Freeway Corridor Specific Plan Land Use Districts depicts the project site within the Freeway Corridor: Main Street/I-15 District while the EIR states and utilizes for analysis throughout the document that it is located in Freeway Corridor: Highway 395/I-15 District. The EIR is internally inconsistent and must be revised to accurately state and analyze that the project is located within the Freeway Corridor: Main Street/I-15 District.

5-4 Cont.

4.2 Air Quality, 4.5 Energy, and 4.6 Greenhouse Gas Emissions

The EIR does not include for analysis relevant environmental justice issues in reviewing potential impacts, including cumulative impacts from the proposed project. This is in conflict with CEQA Guidelines Section 15131 (c), which requires that "Economic, social, and particularly housing factors shall be considered by public agencies together with technological and environmental factors in deciding whether changes in a project are feasible to reduce or avoid the significant effects on the environment identified in the EIR. If information on these factors is not contained in the EIR, the information must be added to the record in some other manner to allow the agency to consider the factors in reaching a decision on the project." This is especially significant as the surrounding community is highly burdened by pollution. See also the attached air quality comments and analysis from SWAPE.

According to CalEnviroScreen 4.0[8], CalEPA's screening tool that ranks each census tract in the state for pollution and socioeconomic vulnerability, the proposed project's census tract (6071010017) is more polluted than average on several environmental indicators measured by CalEnviroScreen, and the surrounding community is burdened by these impacts. For example, the project census tract ranks in the 97th percentile for ozone burden, the 46th percentile for particulate matter (PM) 2.5 burden, the 33rd percentile for diesel PM burden, and the 63rd percentile for traffic impacts. All of these environmental factors are attributed to heavy truck activity in the area. While California has strict vehicle-emissions standards, exhaust from cars and trucks is the main source of air pollution in much of the state[9]. Ozone can cause lung irritation, inflammation, and worsening of existing chronic health conditions, even at low levels of exposure[10]. Exhaust fumes contain toxic chemicals that can damage DNA, cause cancer, make breathing difficult, and cause low weight and premature births[11]. The very small particles of diesel PM can reach deep into the lung, where they can contribute to a range of health problems. These include irritation to the eyes, throat and nose, heart and lung disease, and lung cancer[12].

5-5

[8] CalEnviroScreen https://experience.arcgis.com/experience/11d2f52282a54ceebcac7428e6184203/page/CalEnviroScreen-4_0/
[9] OEHHA Traffic https://oehha.ca.gov/calenviroscreen/indicator/traffic-density
[10] OEHHA Ozone https://oehha.ca.gov/calenviroscreen/indicator/air-quality-ozone
[11] OEHHA Traffic https://oehha.ca.gov/calenviroscreen/indicator/traffic-density
[12] OEHHA Diesel Particulate Matter https://oehha.ca.gov/calenviroscreen/indicator/diesel-particulate-matter

The census tract also ranks in the 50th percentile for hazardous waste facility impacts. Hazardous waste generators and facilities contribute to the contamination of air, water and soil near waste generators and facilities can harm the environment as well as people[13].

Further, the project's census tract is a diverse community including 52% Hispanic, 4% Indigenous American, 4% African-American, and 4% Asian-American residents, whom are especially vulnerable to the impacts of pollution. The community has a high rate of poverty, meaning 44% of the households in the census tract have a total income before taxes that is less than the poverty level. Income can affect health when people cannot afford healthy living and working conditions, nutritious food and necessary medical care[14]. Poor communities are often located in areas with high levels of pollution[15]. Poverty can cause stress that weakens the immune system and causes people to become ill from pollution[16]. The community has a high rate of low educational attainment, meaning 59% of the census tract over age 25 has not attained a high school diploma, which is an indication that they may lack health insurance or access to medical care. Medical care is vital for this census tract as it ranks in the 80th percentile for incidence of cardiovascular disease.

5-5 Cont.

The State of California lists three approved compliance modeling softwares[17] for non-residential buildings: CBECC-Com, EnergyPro, and IES VE. CalEEMod is not listed as an approved software. The CalEEMod modeling sourced in Appendix B-1: Air Quality and GHG Emission Estimates does not comply with the 2022 Building Energy Efficiency Standards and under-reports the project's significant Energy impacts and fuel consumption to the public and decision makers. Since the EIR did not accurately or adequately model the energy impacts in compliance with Title 24, it cannot conclude the project will generate less than significant impacts and a finding of significance must be made. A revised EIR with modeling using one of the approved software types must be prepared and circulated for public review in order to adequately analyze the project's significant environmental impacts. This is vital as the EIR utilizes CalEEMod as a source in its methodology and analysis, which is clearly not an approved software.

5-6

4.10 Transportation

The EIR has not adequately analyzed the project's potential to substantially increase hazards due to a geometric design feature (e.g., sharp curves or dangerous intersections) or incompatible uses; or the project's potential to result in inadequate emergency access. The EIR has not provided any exhibits depicting the available truck/trailer turning radius at the intersection of the project driveways and the adjacent streets to determine if there is enough space available to accommodate

5-7

[13] OEHHA Hazardous Waste Generators and Facilities https://oehha.ca.gov/calenviroscreen/indicator/hazardous-waste-generators-and-facilities
[14] OEHHA Poverty https://oehha.ca.gov/calenviroscreen/indicator/poverty
[15] Ibid.
[16] Ibid.
[17] California Energy Commission 2022 Energy Code Compliance Software https://www.energy.ca.gov/programs-and-topics/programs/building-energy-efficiency-standards/2022-building-energy-efficiency-1

heavy truck maneuvering. Further, there are no exhibits providing on-site analysis regarding available space on the property to accommodate heavy truck maneuvering. Several areas of potential conflicts between passenger cars and truck/trailers exist. Notably, passenger car parking stalls are located within the maneuvering area for the truck/trailer loading dock spaces and the access area for driveway 3 (southeast). These parking stalls may be in use at any time and further restrict movement on the site, require additional queuing area for trucks and passenger cars, and present a safety hazard with potential for conflicts between passenger cars and trucks/trailers. This issue and overall truck/trailer access to and within the site has not been analyzed and a revised EIR must be prepared to include a finding of significance as it has not provided any substantial evidence to support a less than significant finding.

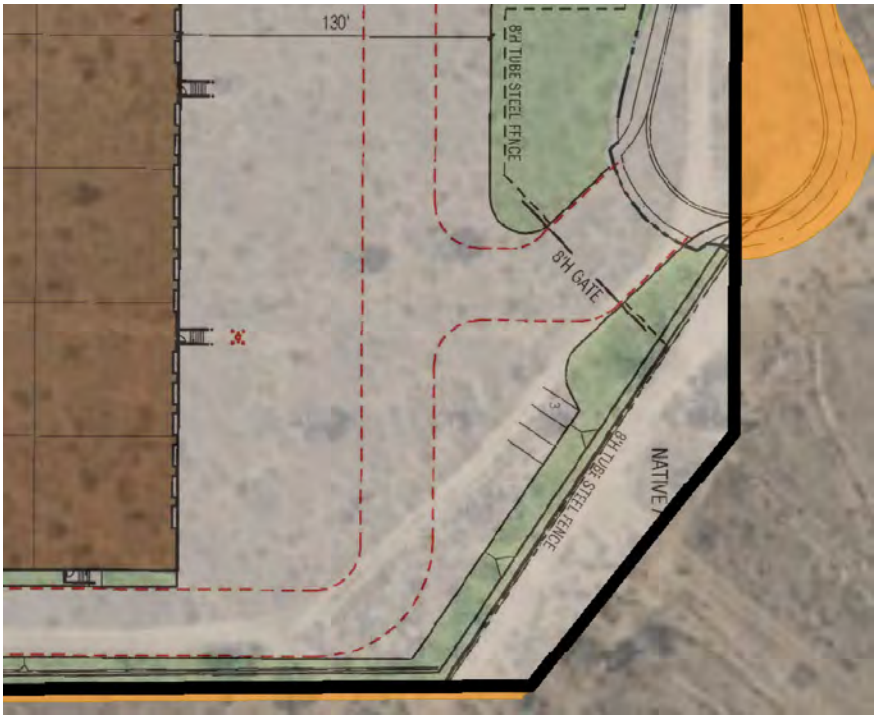

5-7
Cont.

The EIR states that, "All roadway improvements required as part of the Project, whether located on or off site, would be designed and constructed in accordance with all applicable local, state, and federal roadway standards and practices. These improvements would be overseen by the applicable lead agency and their qualified traffic engineers. This approach would ensure compliance with all applicable roadway design requirements. As such, no hazardous design features would be part of the Project's roadway improvements or site access. Impacts would be less than significant." This

does not comply with CEQA's requirements for adequate informational documents and meaningful disclosure (CEQA § 15121 and 21003(b)). The EIR has not provided any details regarding the City standards for items such as road development, stacking distances, lines of sight, or meaningful analysis of the project's compliance or noncompliance with these requirements. Deferring this environmental analysis required by CEQA to the construction permitting phase is improper mitigation and does not comply with CEQA's requirement for meaningful disclosure and adequate informational documents. A revised EIR must be prepared to include a finding of significance as the EIR has not provided any meaningful evidence to support a less than significant finding.

There are also no exhibits depicting emergency vehicle access. The EIR states that, "All street improvements will be designed with adequate width, turning radius, and grade to facilitate access by City's firefighting apparatus, and to provide alternative emergency ingress and egress. The site plan would be subject to plan review by the City's Fire Department to ensure proper access for fire and emergency response is provided and required fire suppression features are included. Therefore, the Project's impact due to inadequate emergency access would be less than significant." However, there is no information regarding the requirements for emergency vehicle access or the project's compliance or noncompliance with these requirements. Deferring this environmental analysis required by CEQA to the construction permitting phase is improper mitigation and does not comply with CEQA's requirement for meaningful disclosure and adequate informational documents. A revised EIR must be prepared to include a finding of significance as the EIR has not provided any meaningful evidence to support a less than significant finding.

5-7 Cont.

5.5 Effects Found Not to Be Significant: Land Use and Planning

The EIR does not provide any information regarding the buildout conditions of the City's General Plan and/or MSFCSP. A revised EIR must be prepared with analysis of projects approved, proposed, or "in the pipeline" to demonstrate that the combined workforce and floor area of all projects does not exceed the growth estimates/buildout scenario analyzed by the MSFC SP EIR and/or the General Plan EIR.

5-8

The EIR does not include a consistency analysis with all applicable goals and policies of the Main Street and Freeway Corridor Specific Plan. A revised EIR must be prepared which includes an analysis of the project in conjunction with all applicable goals and policies, including the following:

1. Goal LU-1a: Respond to market trends and development pressures by creating a forward looking and responsible development plan for the Specific Plan area.
2. Policy LU-1.3: Mix land uses to create a vibrant and more active environment and make the most efficient use of available land.

5-9

5-10

5-11

3. Policy LU-2.3: Maximize the economic impact of available industrial land by careful use of industrial properties, giving priority to clean enterprises that yield large numbers of highly skilled high-paying jobs relative to site size.
4. Goal LU-3: Create a regional shopping draw of development at the intersection of Interstate-15 and Main Street.
5. Policy LU-3.1: Designate areas around the intersection of Interstate-15 and Main Street for commercial and retail development.
6. Policy LU-3.2: Attract high quality retail, office, hotel and mixed-use projects near the intersection of Interstate-15 and Main Street where freeway visibility and accessibility are highest.

5-12
5-13
5-14
5-15

Figure 3-8: Main Street and Freeway Corridor Specific Plan Land Use Districts depicts the project site within the Freeway Corridor: Main Street/I-15 District while the EIR states and utilizes for analysis throughout the document that it is located in Freeway Corridor: Highway 395/I-15 District. This inconsistent information must be clarified in a revised EIR that is recirculated for public review.

5-16

The EIR has not analyzed the project in accordance with all applicable requirements of the MSFCSP. For example, Section 4.3: Maximum Building Height within Chapter 9 - G. Commercial/Industrial Business Park stats that, "The maximum building height shall be 60 feet, with the following exceptions: (1) The building height shall be limited to 45 feet within the portion of the lot that falls within 100 feet of an adjacent residential zone." The parcels adjacent to the south of the project site have a zoning designation of Low Density Residential (LDR). The southern 100 feet of the project site are therefore required to have a maximum 45 foot building height. Figure 3-15: Architectural Elevations depicts the southern building elevation as 48 feet in height. The project does not comply with this requirement and a finding of significance must be provided in a revised EIR. Additionally, a revised EIR must provide a complete consistency analysis with all other requirements of the MSFCSP.

5-17

Table 5-2: Regional Transportation Plan/Sustainable Communities Strategy Consistency Analysis provides a misleading and erroneous consistency analysis with the Goals of SCAG's RTP/SCS. For example, the EIR concludes that the project is consistent with Goal 2 to improve mobility, accessibility, reliability, and travel safety for people and goods; and Goal 4 to increase person and goods movement and travel choices within the transportation system, without discussing the project's significant and unavoidable impacts to VMT. The EIR also concludes the project is consistent with Goal 5 to reduce greenhouse gas emissions and improve air quality and Goal 6 to support healthy and equitable communities even though the project will even though the project will result in significant and unavoidable Greenhouse Gas Emissions impacts in an inequitable

5-18

manner within a SCAG Priority Equity Community[18] (SCAG Census Tract 06071010034). A revised EIR must be prepared to disclose the project's inconsistency with these policies and include a finding of significance. 5-18 Cont.

Table 5-2: Regional Transportation Plan/Sustainable Communities Strategy Consistency Analysis provides a misleading and erroneous consistency analysis with the Goals of SCAG's 2024 Connect SoCal RTP/SCS[19]. Due to errors in modeling, modeling without supporting evidence (as noted throughout this comment letter and attachments), and the EIR's determination that the project will have significant and unavoidable cumulatively considerable VMT and Greenhouse Gas Emissions impacts, the proposed project is directly inconsistent with the following: 5-19

1. Equitable Engagement and Decision-Making Policy 45. Advance community-centered interventions, resources and programming that serve the most disadvantaged communities and people in the region, like Priority Equity Communities, with strategies that can be implemented in the short-to-long-term. 5-20
2. Equitable Engagement and Decision-Making Policy 46. Promote racial equity that is grounded in the recognition of the past and current harms of systemic racism and one that advances restorative justice. 5-21
3. Equitable Engagement and Decision-Making Policy 47. Increase equitable, inclusive, and meaningful representation and participation of people of color and disadvantaged communities in planning processes. 5-22
4. Sustainable Development Policy 48. Promote sustainable development and best practices that enhance resource conservation, reduce resource consumption and promote resilience. 5-23
5. Sustainable Development Policy 49. Support communities across the region to advance innovative sustainable development practices. 5-24
6. Sustainable Development Policy 50. Recognize and support the diversity of communities across the region by promoting local place-making, planning and development efforts that advance equity, mobility, resilience and sustainability. 5-25
7. Air Quality Policy 51. Reduce hazardous air pollutants and greenhouse gas emissions and improve air quality throughout the region through planning and implementation efforts. 5-26

[18] https://hub.scag.ca.gov/datasets/daa7cbaf5b064399800f3426cbb64270_0/explore?location=33.814985%2C-117.221261%2C14.86

[19] https://scag.ca.gov/sites/default/files/2024-05/23-2987-connect-socal-2024-final-complete-040424.pdf

8. Air Quality Policy 52. Support investments that reduce hazardous air pollutants and greenhouse gas emissions. 5-27

9. Air Quality Policy 53. Reduce the exposure and impacts of emissions and pollutants and promote local and regional efforts that improve air quality for vulnerable populations, including but not limited to Priority Equity Communities and the AB 617 Communities. 5-28

10. Climate Resilience Policy 64. Prioritize the most vulnerable populations and communities subject to climate hazards to help the people, places and infrastructure that are most at risk for climate change impacts. In doing so, recognize that disadvantaged communities are often overburdened. 5-29

11. Climate Resilience Policy 65. Support local and regional climate and hazard planning and implementation efforts for transportation, land use, and other factors. 5-30

12. Climate Resilience Policy 66. Support nature-based solutions to increase regional resilience of the natural and built environment. 5-31

A revised EIR must be prepared to disclose the project's inconsistency with these policies and include a finding of significance. This is especially notable as the project site (SCAG Census Tract 06071010034) is identified as a Priority Equity Community in the RTP/SCS[20]. 5-32

Further, the EIR does not provide a consistency analysis with all land use plans, policies, or regulations adopted for the purpose of avoiding or mitigating an environmental effect. The project has significant potential to conflict with many of these items, including but not limited to the following from the General Plan: 5-33

1. Goal LU-1 Regulate development so that the density of residential development and the intensity of non-residential development are appropriate to the property, surrounding properties, and the general neighborhood. 5-34
2. Implementation Policy LU-1.1 Require that new construction, additions, renovations, and infill developments be sensitive to neighborhood context and building form and scale. 5-35
3. Implementation Policy LU-1.3 Require that new construction, additions, renovations, and infill developments be sensitive to the intent of the land use designations, incorporating neighborhood context as well as building form and scale. 5-36
4. Implementation Policy LU-1.4 Encourage architecture which breaks massive buildings into smaller parts. Focus on maintaining a human scale when creating common spaces or amenities. 5-37

[20] https://hub.scag.ca.gov/datasets/daa7cbaf5b064399800f3426cbb64270_0/explore?location=33.814985%2C-117.221261%2C14.86

5. Implementation Policy LU-3.5 Require the separation or buffering of residential areas from businesses which produce noise, odors, high traffic volumes, light or glare, and parking through the use of landscaping, setbacks, and other techniques. 5-38
6. Goal LU-7 Facilitate a self-contained community with a well designed and maintained community with a full range of densities and uses within the capacity of infrastructure and services. 5-39
7. Implementation Policy LU-7.2 Promote sustainable building practices that go beyond the requirements of Title 24 of the California Administrative Code, and encourage energy-efficient design elements, consistent with Policy LU-6.1. 5-40
8. Implementation Policy CI-1.10 Ensure that new development provides for adequate road improvements to serve internal circulation needs, as well as to mitigate impacts of increased traffic on the existing road system. 5-41
9. Implementation Policy CI-2.1 Strive to achieve and maintain a LOS D or better on all roadways and intersections: LOS E during peak hours shall be considered acceptable through freeway interchanges and major corridors (Bear Valley Road, Main Street/Phelan Road, Highway 395). 5-42
10. Implementation Policy CI-2.2 Work with regional agencies which have authority over roadways within the City to ensure a minimum Level of Service D for roadways and a minimum Level of Service E for intersections. 5-43
11. CI Policy 2.4 Develop policies and regulations to ensure that future development does not reduce the Level of Service of roadways and intersections below the minimum Levels of Service goals. 5-44
12. Goal: CN-7 Develop, promote and implement policies to reduce and limit Greenhouse Gas Emissions 5-45
13. Goal: CN- 8 Implement policies and measures to reduce air pollution and emissions of pollutants. 5-46

A revised EIR must be prepared to include an analysis of the project's potential inconsistency with these goals and policies. The revised EIR must also include information and analysis regarding the EIR's conclusion that the project will result in significant and unavoidable cumulatively considerable impacts to Greenhouse Gas Emissions and Transportation. 5-47

5.7 Effects Found Not to Be Significant: Population and Housing

The EIR utilizes uncertain and misleading language in supporting a less than significant finding in stating that, "data provided by the California Employment Development Department in August 2021 found that the unemployment rate for San Bernardino County is 4.3%, which is slightly higher than the state average of 4.1% (EDD 2023). As such, the Project's temporary and permanent employment requirements *could likely* be met by the City's existing labor force without people needing to relocate *into the Project region*, and the Project would not stimulate population growth or a population concentration above what is assumed in local and regional land use plans." without 5-48

providing any quantified or geographical information to support this claim. Additionally, an unemployment rate of less than 5% is considered full employment. Relying on an unemployment rate of less than 5% is not substantial evidence to support a less than significant finding. The EIR does not provide evidence that the specific unemployed workforce listed is qualified for or interested in industrial work to substantiate this claim. Relying on the entire labor force within the greater SCAG region to fill the project's construction jobs will increase rates of VMT and emissions during all phases of construction and a revised EIR must be prepared to account for longer worker trip distances.

SCAG's Connect SoCal Demographics and Growth Forecast[21] notes that the City will add 14,900 jobs from 2019 to 2035. Based on the EIR's calculation of 351 jobs, the project represents 2.3% of the City's job growth over 16 years. A single project accounting for this amount of the projected employment growth over 16 years represents a significant amount of growth. The EIR has not provided a cumulative analysis discussion of projects approved since 2019 (SCAG), General Plan adoption, and/or projects "in the pipeline" to determine if the project will exceed SCAG's employment growth forecast or the General Plan/MSFCSP growth projections.

5-48 Cont.

For example, other recent industrial projects such as US Cold Storage (913 employees), Hesperia Commerce Center I (2,928 employees), Hesperia Commerce Center II (3,959 employees), Dara Industrial (628 employees), I-15 Industrial Park (2,309 employees), Poplar 18 (657 employees), Mesa Linda Street Development (342 employees), KISS Logistics Center (549 employees) combined with the proposed project will cumulatively generate 12,636 employees. This represents 84.8% of the City's job growth over 16 years accounted for by only nine recent industrial projects. These totals increase exponentially when commercial development activity is added to the brief list of industrial activity above. The EIR must be revised to include this information for analysis, and also provide a cumulative analysis discussion of projects approved "in the pipeline" to determine the City's progress towards employment/population growth forecasts by SCAG, the City's General Plan, and/or the MSFCSP and their applicable EIRs.

6.1 Growth-Inducing Impacts

The EIR must include a cumulative employment analysis discussion here to demonstrate the impact of the proposed project in a cumulative setting. For example, other recent industrial projects such as US Cold Storage (913 employees), Hesperia Commerce Center I (2,928 employees), Hesperia Commerce Center II (3,959 employees), Dara Industrial (628 employees), I-15 Industrial Park (2,309 employees), Poplar 18 (657 employees), Mesa Linda Street Development (342 employees), KISS Logistics Center (549 employees) combined with the proposed project will cumulatively generate 12,636 employees. This represents 52% of the City's

5-49

[21] SCAG Connect SoCal Demographics and Growth Forecast https://www.scag.ca.gov/sites/default/files/2024-05/23-2987-tr-demographics-growth-forecast-final-040424.pdf

job growth over 29 years accounted for by only nine recent industrial projects. These totals increase exponentially when commercial development activity is added to the brief list of industrial activity above. The EIR must be revised to include this information for analysis, and also provide a cumulative analysis discussion of projects approved since 2016 and projects "in the pipeline" to determine if the proposed project will exceed the employment/population growth forecasts by SCAG, the City's General Plan, and/or the MSFCSP and their applicable EIRs.

5-49 Cont.

7.0 Alternatives

The EIR is required to evaluate a reasonable range of alternatives to the proposed project which will avoid or substantially lessen any of the significant effects of the project (CEQA § 15126.6.) The alternatives chosen for analysis include the CEQA required "No Project/No Development Alternative" alternative and only two others - Other Development Project Alternative and Reduced Development Intensity Alternative. The EIR does not evaluate a reasonable range of alternatives as only two alternatives beyond the required No Project alternative is analyzed. The EIR must be revised to include analysis of a reasonable range of alternatives and foster informed decision making (CEQA § 15126.6). This could include alternatives such as development of the site with a project that reduces the proposed project's significant and unavoidable cumulatively considerable Greenhouse Gas Emissions and Transportation (VMT) impacts, and a mixed-use project that provides affordable housing and local-serving commercial uses that may reduce VMT, GHG emissions, and improve Air Quality.

5-50

Conclusion

For the foregoing reasons, GSEJA believes the EIR is flawed and an amended EIR must be prepared for the proposed project and recirculated for public review. Golden State Environmental Justice Alliance requests to be added to the public interest list regarding any subsequent environmental documents, public notices, public hearings, and notices of determination for this project. Send all communications to Golden State Environmental Justice Alliance P.O. Box 79222 Corona, CA 92877.

5-51

Sincerely,



Vashon Simien
Blum, Collins & Ho, LLP

Attachments:

1. SWAPE Technical Analysis

SWAPE Technical Consultation, Data Analysis and Litigation Support for the Environment

2656 29th Street, Suite 201
Santa Monica, CA 90405

Matt Hagemann, P.G, C.Hg.
(949) 887-9013
mhagemann@swape.com

Paul E. Rosenfeld, PhD
(310) 795-2335
prosenfeld@swape.com

July 25, 2025

Gary Ho
Blum, Collins & Ho LLP
707 Wilshire Blvd, Ste. 4880
Los Angeles, CA 90017

Subject: Comments on the Phelan 20 Project (SCH No. 2024020980)

Dear Mr. Ho,

We have reviewed the May 2025 Draft Environmental Impact Report ("DEIR") for the Phelan 20 ("Project") located in the City of Hesperia ("City"). The Project proposes to construct 419,840-square-feet ("SF") of warehouse space, 5,000-SF of office space, and 200 parking spaces on the 21.4-acre site. 5-52

Our review concludes that the DEIR fails to adequately evaluate the Project's greenhouse gas impacts. A revised Environmental Impact Report ("EIR") should be prepared to adequately assess and mitigate the potential greenhouse gas impacts that the project may have on the environment.

Greenhouse Gas

Failure to Adequately Evaluate Greenhouse Gas Impacts

The DEIR estimates that the Project would result in net annual greenhouse gas ("GHG") emissions of 10,114-metric tons of carbon dioxide equivalents per year ("MT CO_2e/year") (see screenshot below) (p. 4.6-24, Table 4.6-6). 5-53

Table 4.6-6. Estimated Annual Operational Greenhouse Gas Emissions - Mitigated

Emission Source	CO_2	CH_4	N_2O	R	CO_2e
	metric tons per year				
Mobile	8,134.81	0.04	0.99	12.23	8,442.25
Area	0.00	0.00	0.00	0.00	0.00
Energy[1]	1,434.65	0.13	0.01	0.00	1,441.72
Water	95.83	2.53	0.06	0.00	177.27
Waste	8.80	0.88	0.00	0.00	30.79
Off-Road Equipment[1]	0.00	0.00	0.00	0.00	0.00
Total	**9,674.09**	**3.59**	**1.06**	**12.23**	**10,092.03**
				Amortized Construction Emissions	*22.07*
				Operational Emissions plus Amortized Construction Emissions	**10,114.11**

Source: Appendix B-1.
Notes: CO_2 = carbon dioxide; CH_4 = methane; N_2O = nitrous oxide; R=refrigerants; CO_2e = carbon dioxide equivalent.
Totals may not sum due to rounding.
Includes implementation of MM-AQ-1 and MM-GHG-1 through MM-GHG-3.
1 The "Energy" source category accounts for the increased electricity requirements to power the all-electric cargo handling and landscaping equipment, required pursuant to MM-AQ-1.

The DEIR concludes that the Project would result in a significant-and-unavoidable GHG impact, stating:

> "As depicted in Table 4.6-6, the Project would still exceed the applied threshold of 3,000 MT CO2e per year after mitigation. Although mobile vehicles are the main source of GHG emissions associated with Project operations, neither the Project Applicant nor the City can substantively or materially affect reductions in the Project's on-road mobile source emissions beyond what is already required by regulation. No feasible mitigation measures beyond those already identified exist that would reduce these emissions to levels that are less than significant. Therefore, even with the incorporation of mitigation, long-term impacts associated with a cumulatively considerable increase in GHG emissions would be significant and unavoidable" (p. 4.6-24).

5-53 Cont.

According to CEQA Guidelines § 15096(g)(2):

> "When an EIR has been prepared for a project, the Responsible Agency shall not approve the project as proposed if the agency finds any feasible alternative or feasible mitigation measures within its powers that would substantially lessen or avoid any significant effect the project would have on the environment."[1]

An impact can therefore only be labeled as significant-and-unavoidable after all available, feasible mitigation measures are evaluated. While the DEIR incorporates MM GHG-1, GHG-2, and GHG-3, there are additional measures that the DEIR does not consider (p. 1-19, 1-20). To reduce the Project's GHG impacts to the maximum extent possible, additional feasible mitigation measures should be incorporated.

[1] "2024 CEQA Statue & Guidelines." Association of Environmental Professionals, *available at*: https://www.califaep.org/docs/2024_CEQA_Statute_and_Guidelines_Handbook.pdf, pp. 286.

Mitigation

Feasible Mitigation Measures Available to Reduce Emissions

According to CEQA Guidelines § 15096(g)(2), the DEIR is consequently required under CEQA to implement all feasible mitigation to reduce a Project's potential impacts. As demonstrated in the sections above, the Project would result in potentially significant GHG impacts that should be mitigated further. To reduce the GHG emissions associated with the Project, we recommend several mitigation measures (see list below).

The California Department of Justice ("CA DOJ") recommends: [2]

- Oversizing electrical rooms by 25 percent or providing a secondary electrical room to accommodate future expansion of electric vehicle charging capability.
- Requiring all stand-by emergency generators to be powered by a non-diesel fuel.
- Meeting CalGreen Tier 2 green building standards, including all provisions related to designated parking for clean air vehicles, electric vehicle charging, and bicycle parking.
- Designing to LEED green building certification standards.
- Constructing zero-emission truck charging/fueling stations proportional to the number of dock doors at the project.
- Running conduit to designated locations for future electric truck charging stations.
- Constructing and maintaining electric light-duty vehicle charging stations proportional to the number of employee parking spaces.
- Running conduit to an additional proportion of employee parking spaces for a future increase in the number of electric light-duty charging stations.
- Requiring facility operators to train managers and employees on efficient scheduling and load management to eliminate unnecessary queuing and idling of trucks.
- Requiring that every tenant train its staff in charge of keeping vehicle records in diesel technologies and compliance with CARB regulations, by attending CARB-approved courses. Also require facility operators to maintain records on-site demonstrating compliance and make records available for inspection by the local jurisdiction, air district, and state upon request.
- Requiring tenants to enroll in the United States Environmental Protection Agency's SmartWay program, and requiring tenants who own, operate, or hire trucking carriers with more than 100 trucks to use carriers that are SmartWay carriers.
- Providing tenants with information on incentive programs, such as the Carl Moyer Program and Voucher Incentive Program, to upgrade their fleets.

5-54

[2] "Warehouse Projects: Best Practices and Mitigation Measures to Comply with the California Environmental Quality Act." State of California Department of Justice, September 2022, *available at*: https://oag.ca.gov/system/files/media/warehouse-best-practices.pdf, p. 8 – 10.

Although the project is located outside the jurisdiction of the South Coast Air Quality Management District ("SCAQMD"), SCAQMD staff recommends the use of light-colored paving and roofing materials.[3]

As provided above, several mitigation measures that would reduce Project-related GHG emissions have been developed from sources including the CA DOJ and others. These measures offer a cost-effective, feasible way to incorporate lower-emitting design features into the proposed Project, which subsequently reduce emissions released during Project construction and operation.

A revised EIR should be prepared that includes all feasible mitigation measures, as well as an updated GHG analysis to ensure that the necessary mitigation measures are implemented to reduce emissions to the maximum extent feasible. The revised EIR should also demonstrate a commitment to the implementation of these mitigation measures prior to Project approval, to ensure that the Project's potentially significant emissions are reduced to the maximum extent possible.

5-54 Cont.

Disclaimer

SWAPE has received limited documentation regarding this project. Additional information may become available in the future; thus, we retain the right to revise or amend this report when additional information becomes available. Our professional services have been performed using that degree of care and skill ordinarily exercised, under similar circumstances, by reputable environmental consultants practicing in this or similar localities at the time of service. No other warranty, expressed or implied, is made as to the scope of work, work methodologies and protocols, site conditions, analytical testing results, and findings presented. This report reflects efforts which were limited to information that was reasonably accessible at the time of the work, and may contain informational gaps, inconsistencies, or otherwise be incomplete due to the unavailability or uncertainty of information obtained or provided by third parties.

5-55

Sincerely,

Matt Hagemann, P.G., C.Hg.

Paul E. Rosenfeld, Ph.D.

[3] "Draft Environmental Impact Report (EIR) for the Proposed CADO Menifee Industrial Warehouse Project (Proposed Project)." SCAQMD, April 2024, *available at*: https://www.aqmd.gov/docs/default-source/ceqa/comment-letters/2024/april-2024/RVC240313-05.pdf?sfvrsn=8, p. 3.

Attachment A: Matt Hagemann CV
Attachment B: Paul Rosenfeld CV

SWAPE Technical Consultation, Data Analysis and Litigation Support for the Environment

2656 29th Street, Suite 201
Santa Monica, CA 90405

(949) 887-9013
mhagemann@swape.com

Matthew F. Hagemann, P.G., C.Hg.

- **Geologic and Hydrogeologic Characterization, Investigation and Remediation Strategies**
- **Industrial Stormwater Compliance**
- **CEQA Review**
- **Expert Testimony**

Professional Certifications:
California Professional Geologist, P.G.
California Certified Hydrogeologist, C.Hg.

Education:
M.S. Degree, Geology, California State University Los Angeles, Los Angeles, CA, 1984.
B.A. Degree, Geology, Humboldt State University, Arcata, CA, 1982.

Professional Experience:
30 years of experience in environmental policy, contaminant assessment and remediation, stormwater compliance, and CEQA review. Spent nine years with the U.S. EPA in the Resource Conservation Recovery Act (RCRA) and Superfund programs and served as EPA's Senior Science Policy Advisor in the Western Regional Office where I identified emerging threats to groundwater. While with EPA, I served as a Senior Hydrogeologist in the oversight of the assessment of seven major military facilities undergoing base closure. Led numerous enforcement actions under provisions of the Resource Conservation and Recovery Act (RCRA) and directed efforts to improve hydrogeologic characterization and water quality monitoring. For the past 15 years, as a founding partner with SWAPE, I developed extensive client relationships and has managed complex projects that include consultations as an expert witness and a regulatory specialist, and managing projects ranging from industrial stormwater compliance to CEQA review of impacts from hazardous waste, air quality and greenhouse gas emissions.

Positions held include:

Government:
Senior Science Policy Advisor and Hydrogeologist, U.S. Environmental Protection Agency (1989–1998);
Hydrogeologist, National Park Service, Water Resources Division (1998 – 2000);

Geologist, U.S. Forest Service (1986 – 1998).

Educational:
Geology Instructor, Golden West College, 2010 – 2104, 2017;
Adjunct Faculty Member, San Francisco State University, Department of Geosciences (1993 – 1998);
Instructor, College of Marin, Department of Science (1990 – 1995).

Private Sector:
Founding Partner, Soil/Water/Air Protection Enterprise (SWAPE) (2003 – present);
Senior Environmental Analyst, Komex H2O Science, Inc. (2000 -- 2003);
Executive Director, Orange Coast Watch (2001 – 2004);
Geologist, Dames & Moore (1984 – 1986).

Senior Regulatory and Litigation Support Analyst:

With SWAPE, responsibilities have included:

- Lead analyst and testifying expert, for both plaintiffs and defendants, in the review of over 300 environmental impact reports and negative declarations since 2003 under CEQA that identify significant issues with regard to hazardous waste, water resources, water quality, air quality, greenhouse gas emissions, and geologic hazards.
- Recommending additional mitigation measures to lead agencies at the local and county level to include additional characterization of health risks and implementation of protective measures to reduce exposure to hazards from toxins.
- Stormwater analysis, sampling and best management practice evaluation, for both government agencies and corporate clients, at more than 150 industrial facilities.
- Serving as expert witness for both plaintiffs and defendants in cases including contamination of groundwater, CERCLAcompliance in assessment and remediation, and industrial stormwater contamination.
- Technical assistance and litigation support for vapor intrusion concerns, for both government agencies and corporate clients.
- Lead analyst and testifying expert in the review of environmental issues in license applicationsfor large solar power plants before the California Energy Commission.
- Manager of a project to evaluate numerous formerly used military sites in the western U.S.
- Manager of a comprehensive evaluation of potential sources of perchlorate contamination in Southern California drinking water wells.
- Manager and designated expert for litigation support under provisions of Proposition 65 in the review of releases of gasoline to sources drinking water at major refineries and hundreds of gas stations throughout California.

With Komex H2O Science Inc., duties included the following:

- Senior author of a report on the extent of perchlorate contamination that was used in testimony by the former U.S. EPA Administrator and General Counsel.
- Senior researcher in the development of a comprehensive, electronically interactive chronology of MTBE use, research, and regulation.
- Senior researcher in the development of a comprehensive, electronically interactive chronology of perchlorate use, research, and regulation.
- Senior researcher in a study that estimates nationwide costs for MTBE remediation and drinking water treatment, results of which were published in newspapers nationwide and in testimony

against provisions of an energy bill that would limit liability for oil companies.
- Research to support litigation to restore drinking water supplies that have been contaminated by MTBE in California and New York.
- Lead author for a multi-volume remedial investigation report for an operating school in LosAngeles that met strict Sate of California regulatory requirements.
- Development of strategic approaches for cleanup of contaminated sites in consultation withclients and regulators.

Hydrogeology:

As a Senior Hydrogeologist with the U.S. Environmental Protection Agency, led investigations to characterize and cleanup closing military bases, including Mare Island Naval Shipyard, Hunters Point Naval Shipyard, Treasure Island Naval Station, Alameda Naval Station, Moffett Field, Mather Army Airfield, and Sacramento Army Depot. Specific activities included:

- Leading efforts to model groundwater flow and contaminant transport, ensured adequacy of monitoring networks, and assessed cleanup alternatives for contaminated sediment, soil, and groundwater.
- Initiating a regional program for evaluation of groundwater sampling practices and laboratory analysis at military bases.
- Identifying emerging issues, wrote technical guidance, and assisted in policy and regulation development through work on four national U.S. EPA workgroups, including the Superfund Groundwater Technical Forum and the Federal Facilities Forum.

At the request of the State of Hawaii, developed a methodology to determine the vulnerability of groundwater to contamination on the islands of Maui and Oahu. Used analytical models and a GIS to show zones of vulnerability, and the results were adopted and published by the State of Hawaii and County of Maui.

As a hydrogeologist with the EPA Groundwater Protection Section, worked with provisions of the Safe Drinking Water Act and NEPA to prevent drinking water contamination. Specific activities included the following:

- Received an EPA Bronze Medal for contribution to the development of national guidance for the protection of drinking water.
- Managed the Sole Source Aquifer Program and protected the drinking water of two communities through designation under the Safe Drinking Water Act. Prepared geologic reports, conducted hearings, and responded to public comments from residents who were very concerned about the impact of designation.
- Reviewed a number of Environmental Impact Statements for planned major developments, including large hazardous and solid waste disposal facilities, mine reclamation, and water transfer.

Served as a hydrogeologist with the RCRA Hazardous Waste program. Duties included:

- Supervised the hydrogeologic investigation of hazardous waste sites to determine compliancewith Subtitle C requirements.
- Reviewed and wrote "part B" permits for the disposal of hazardous waste.
- Conducted RCRA Corrective Action investigations of waste sites and led inspections that formed the basis for significant enforcement actions that were developed in close coordination with U.S.EPA legal counsel.
- Wrote contract specifications and supervised contractor's investigations of waste sites.

With the National Park Service, directed service-wide investigations of contaminant sources to prevent degradation of water quality, including the following:

- Applied pertinent laws and regulations including CERCLA, RCRA, NEPA, NRDA, and the Clean Water Act to control military, mining, and landfill contaminants.
- Conducted watershed-scale investigations of contaminants at parks, including Yellowstone and Olympic National Park.
- Identified high-levels of perchlorate in soil adjacent to a national park in New Mexicoand advised park superintendent on appropriate response actions under CERCLA.
- Served as a Park Service representative on the Interagency Perchlorate Steering Committee, a national workgroup.
- Developed a program to conduct environmental compliance audits of all National Parks while serving on a national workgroup.
- Co-authored two papers on the potential for water contamination from the operation of personal watercraft and snowmobiles, these papers serving as the basis for the development of nation- wide policy on the use of these vehicles in National Parks.
- Contributed to the Federal Multi-Agency Source Water Agreement under the Clean Water Action Plan.

Policy:

Served as senior management as the Senior Science Policy Advisor with the U.S. Environmental Protection Agency, Region 9. Activities included the following:

- Advising the Regional Administrator and senior management on emerging issues such as the potential for the gasoline additive MTBE and ammonium perchlorate to contaminate drinkingwater supplies.
- Shaping EPA's national response to these threats by serving on workgroups and by contributingto guidance, including the Office of Research and Development publication, Oxygenates in Water: Critical Information and Research Needs.
- Improving the technical training of EPA's scientific and engineering staff.
- Earning an EPA Bronze Medal for representing the region's 300 scientists and engineers in negotiations with the Administrator and senior management to better integrate scientific principles into the policy-making process.
- Establishing national protocol for the peer review of scientific documents.

Geology:

With the U.S. Forest Service, led investigations to determine hillslope stability of areas proposed for timber harvest in the central Oregon Coast Range. Specific activities included:

- Mapping geology in the field, and used aerial photographic interpretation and mathematical models to determine slope stability.
- Coordinating research with community stakeholders who were concerned with natural resource protection.
- Characterizing the geology of an aquifer that serves as the sole source of drinking water for thecity of Medford, Oregon.

As a consultant with Dames and Moore, led geologic investigations of two contaminated sites (later listed on the Superfund NPL) in the Portland, Oregon, area and a large RCRA hazardous waste site in eastern Oregon.

Duties included the following:

- Supervising year-long effort for soil and groundwater sampling.
- Conducting aquifer tests.
- Investigating active faults beneath sites proposed for hazardous waste disposal.

Teaching:

From 1990 to 1998, taught at least one course per semester at the community college and university levels:

- At San Francisco State University, held an adjunct faculty position and taught courses in environmental geology, oceanography (lab and lecture), hydrogeology, and groundwater contamination.
- Served as a committee member for graduate and undergraduate students.
- Taught courses in environmental geology and oceanography at the College of Marin.
- Part time geology instructor at Golden West College in Huntington Beach, California from 2010 to 2014 and in 2017.

Summary of Testimony Experience Over Past Four Years

In Re New Jersey Department of Environmental Protection et al. vs. E.I. DuPont de Nemours and Company, in the United States District Court, District of New Jersey, Civil Action No. 1:19-cv-14766-RMB-JBC. Deposition in 2025. Representing Plaintiffs in matters regarding contamination of groundwater, wastewater, soil, and air with per- and poly-fluoroalkyl substances.

In Re Edmond Asher, et al., vs. RTX Corporation (f/k/a Raytheon Technologies Corporation, et al.) in the County of Huntington Superior Court, Indiana, Cause number 35D01-2006-CT-000338. Deposition in 2024. Representing Plaintiffs in matters regarding contamination of groundwater and soil vapor with trichlorethylene.

In Re Wright vs Consolidated Rail Corporation In the Circuit Court of Cook County, Illinois, Case No: 21L3966. Deposition in 2023, Representing Plaintiff in matters involving groundwater and drinking water contamination of perchloroethylene, trichlorethylene, 1,2-dichloroethane, and carbon tetrachloride.

In Re Behr Dayton Thermal Products LLC In the United States District Court for the Southern District of Ohio Western Division at Dayton, Case No: 08-cv-326. Deposition in 2022. Representing Plaintiff in matters regarding contamination of groundwater and indoor air with perchloroethylene and trichloethelene.

Orange County Water District vs. Sabic Innovative Plastics US, LLC, et al. In the Court of Appeal, Fourth District, Division 1, California, Case No: D070553. Deposition in 2020. Representing Plaintiff in matters involving compliance with The Comprehensive Environmental Response, Compensation, and Liability Act (CERCLA).

Los Angeles Waterkeeper vs. AAA Plating and Inspection, Inc. In the United States District Court for the Central District of California, Case No: No. CV 18-5916 PA (GJSx). Deposition in 2019. Expert witness representing Plaintiff in matters involving contaminated stormwater runoff at an industrial facility in Compton, California.

Californians for Alternatives to Toxics vs. Schneider Dock and Intermodal Facility. In the United States District Court for the Northern District of California, Case No: 3:17-cv-05287-JST. Deposition in 2019. Expert witness representing Plaintiff in matters involving contaminated stormwater runoff at an industrial facility in Eureka, California.

Bells et al. vs. The 3M Company et al. In the United States District Court for the District of Colorado, Case No: 1:16-CV-02531-RBJ. Deposition in 2018. Expert witness representing Plaintiff on matters regarding the general hydrogeological conditions present in an area impacted by per- and poly-fluoroalkyl substances.

Ungar vs. Foundation for Affordable Housing. In the Superior Court, State of California, Los Angeles County, Case No. BC628890 Deposition in 2017. Expert witness representing defendant on matters involving alleged drinking water contamination.

Invited Testimony, Reports, Papers and Presentations:

Hagemann, M.F., 2008. Disclosure of Hazardous Waste Issues under CEQA. Presentation to the Public Environmental Law Conference, Eugene, Oregon.

Hagemann, M.F., 2008. Disclosure of Hazardous Waste Issues under CEQA. Invited presentation to U.S.EPA Region 9, San Francisco, California.

Hagemann, M.F., 2005. Use of Electronic Databases in Environmental Regulation, Policy Making andPublic Participation. Brownfields 2005, Denver, Coloradao.

Hagemann, M.F., 2004. Perchlorate Contamination of the Colorado River and Impacts to Drinking Water in Nevada and the Southwestern U.S. Presentation to a meeting of the American Groundwater Trust, Las Vegas, NV (served on conference organizing committee).

Hagemann, M.F., 2004. Invited testimony to a California Senate committee hearing on air toxins atschools in Southern California, Los Angeles.

Brown, A., Farrow, J., Gray, A. and **Hagemann, M.**, 2004. An Estimate of Costs to Address MTBEReleases from Underground Storage Tanks and the Resulting Impact to Drinking Water Wells.
Presentation to the Ground Water and Environmental Law Conference, National GroundwaterAssociation.

Hagemann, M.F., 2004. Perchlorate Contamination of the Colorado River and Impacts to Drinking Waterin

Arizona and the Southwestern U.S. Presentation to a meeting of the American Groundwater Trust, Phoenix, AZ (served on conference organizing committee).

Hagemann, M.F., 2003. Perchlorate Contamination of the Colorado River and Impacts to Drinking Waterin the Southwestern U.S. Invited presentation to a special committee meeting of the National Academy of Sciences, Irvine, CA.

Hagemann, M.F., 2003. Perchlorate Contamination of the Colorado River. Invited presentation to atribal EPA meeting, Pechanga, CA.

Hagemann, M.F., 2003. Perchlorate Contamination of the Colorado River. Invited presentation to ameeting of tribal representatives, Parker, AZ.

Hagemann, M.F., 2003. Impact of Perchlorate on the Colorado River and Associated Drinking WaterSupplies. Invited presentation to the Inter-Tribal Meeting, Torres Martinez Tribe.

Hagemann, M.F., 2003. The Emergence of Perchlorate as a Widespread Drinking Water Contaminant.Invited presentation to the U.S. EPA Region 9.

Hagemann, M.F., 2003. A Deductive Approach to the Assessment of Perchlorate Contamination. Invited presentation to the California Assembly Natural Resources Committee.

Hagemann, M.F., 2003. Perchlorate: A Cold War Legacy in Drinking Water. Presentation to a meeting ofthe National Groundwater Association.

Hagemann, M.F., 2002. From Tank to Tap: A Chronology of MTBE in Groundwater. Presentation to ameeting of the National Groundwater Association.

Hagemann, M.F., 2002. A Chronology of MTBE in Groundwater and an Estimate of Costs to AddressImpacts to Groundwater. Presentation to the annual meeting of the Society of Environmental Journalists.

Hagemann, M.F., 2002. An Estimate of the Cost to Address MTBE Contamination in Groundwater(and Who Will Pay). Presentation to a meeting of the National Groundwater Association.

Hagemann, M.F., 2002. An Estimate of Costs to Address MTBE Releases from Underground Storage Tanks and the Resulting Impact to Drinking Water Wells. Presentation to a meeting of the U.S. EPA andState Underground Storage Tank Program managers.

Hagemann, M.F., 2001. From Tank to Tap: A Chronology of MTBE in Groundwater. Unpublishedreport.

Hagemann, M.F., 2001. Estimated Cleanup Cost for MTBE in Groundwater Used as Drinking Water. Unpublished report.

Hagemann, M.F., 2001. Estimated Costs to Address MTBE Releases from Leaking Underground StorageTanks. Unpublished report.

Hagemann, M.F., and VanMouwerik, M., 1999. Potential Water Concerns Related to Snowmobile Usage.

Water Resources Division, National Park Service, Technical Report.

VanMouwerik, M. and **Hagemann, M.F**. 1999, Water Quality Concerns Related to Personal WatercraftUsage. Water Resources Division, National Park Service, Technical Report.

Hagemann, M.F., 1999, Is Dilution the Solution to Pollution in National Parks? The George WrightSociety Biannual Meeting, Asheville, North Carolina.

Hagemann, M.F., 1997, The Potential for MTBE to Contaminate Groundwater. U.S. EPA Superfund Groundwater Technical Forum Annual Meeting, Las Vegas, Nevada.

Hagemann, M.F., and Gill, M., 1996, Impediments to Intrinsic Remediation, Moffett Field Naval AirStation, Conference on Intrinsic Remediation of Chlorinated Hydrocarbons, Salt Lake City.

Hagemann, M.F., Fukunaga, G.L., 1996, The Vulnerability of Groundwater to Anthropogenic Contaminants on the Island of Maui, Hawaii. Hawaii Water Works Association Annual Meeting, Maui,October 1996.

Hagemann, M. F., Fukanaga, G. L., 1996, Ranking Groundwater Vulnerability in Central Oahu, Hawaii. Proceedings, Geographic Information Systems in Environmental Resources Management, Airand Waste Management Association Publication VIP-61.

Hagemann, M.F., 1994. Groundwater Ch ar ac te r i z a t i o n and Cl ean up a t Closing Military Basesin California. Proceedings, California Groundwater Resources Association Meeting.

Hagemann, M.F. and Sabol, M.A., 1993. Role of the U.S. EPA in the High Plains States Groundwater Recharge Demonstration Program. Proceedings, Sixth Biennial Symposium on the Artificial Recharge of Groundwater.

Hagemann, M.F., 1993. U.S. EPA Policy on the Technical Impracticability of the Cleanup of DNAPL-contaminated Groundwater. California Groundwater Resources Association Meeting.

Hagemann, M.F., 1992. Dense Nonaqueous Phase Liquid Contamination of Groundwater: An Ounce of Prevention... Proceedings, Association of Engineering Geologists Annual Meeting, v. 35.

Other Experience:
Selected as subject matter expert for the California Professional Geologist licensing examinations,2009-2011.

SWAPE Technical Consultation, Data Analysis and Litigation Support for the Environment

SOIL WATER AIR PROTECTION ENTERPRISE
2656 29th Street, Suite 201
Santa Monica, California 90405
Attn: Paul Rosenfeld, Ph.D.
Mobil: (310) 795-2335
Office: (310) 452-5555
Fax: (310) 452-5550
Email: prosenfeld@swape.com

Paul Rosenfeld, Ph.D.

Chemical Fate and Transport & Air Dispersion Modeling

Principal Environmental Chemist

Risk Assessment & Remediation Specialist

Education

Ph.D. Soil Chemistry, University of Washington, 1999. Dissertation on volatile organic compound filtration.

M.S. Environmental Science, U.C. Berkeley, 1995. Thesis on organic waste economics.

B.A. Environmental Studies, U.C. Santa Barbara, 1991. Focus on wastewater treatment.

Professional Experience

Dr. Rosenfeld has over 25 years of experience conducting environmental investigations and risk assessments for evaluating impacts to human health, property, and ecological receptors. His expertise focuses on the fate and transport of environmental contaminants, human health risk, exposure assessment, and ecological restoration. Dr. Rosenfeld has evaluated and modeled emissions from oil spills, landfills, boilers and incinerators, process stacks, storage tanks, confined animal feeding operations, industrial, military and agricultural sources, unconventional oil drilling operations, and locomotive and construction engines. His project experience ranges from monitoring and modeling of pollution sources to evaluating impacts of pollution on workers at industrial facilities and residents in surrounding communities. Dr. Rosenfeld has also successfully modeled exposure to contaminants distributed by water systems and via vapor intrusion.

Dr. Rosenfeld has investigated and designed remediation programs and risk assessments for contaminated sites containing lead, heavy metals, mold, bacteria, particulate matter, petroleum hydrocarbons, chlorinated solvents, pesticides, radioactive waste, dioxins and furans, semi- and volatile organic compounds, PCBs, PAHs, creosote, perchlorate, asbestos, per- and poly-fluoroalkyl substances (PFOA/PFOS), unusual polymers, fuel oxygenates (MTBE), among other pollutants. Dr. Rosenfeld also has experience evaluating greenhouse gas emissions from various projects and is an expert on the assessment of odors from industrial and agricultural sites, as well as the evaluation of odor nuisance impacts and technologies for abatement of odorous emissions. As a principal scientist at SWAPE, Dr. Rosenfeld directs air dispersion modeling and exposure assessments. He has served as an expert witness and testified about pollution sources causing nuisance and/or personal injury at sites and has testified as an expert witness on numerous cases involving exposure to soil, water and air contaminants from industrial, railroad, agricultural, and military sources.

Professional History:

Soil Water Air Protection Enterprise (SWAPE); 2003 to present; Principal and Founding Partner
UCLA School of Public Health; 2007 to 2011; Lecturer (Assistant Researcher)
UCLA School of Public Health; 2003 to 2006; Adjunct Professor
UCLA Environmental Science and Engineering Program; 2002-2004; Doctoral Intern Coordinator
UCLA Institute of the Environment, 2001-2002; Research Associate
Komex H_2O Science, 2001 to 2003; Senior Remediation Scientist
National Groundwater Association, 2002-2004; Lecturer
San Diego State University, 1999-2001; Adjunct Professor
Anteon Corp., San Diego, 2000-2001; Remediation Project Manager
Ogden (now Amec), San Diego, 2000-2000; Remediation Project Manager
Bechtel, San Diego, California, 1999 – 2000; Risk Assessor
King County, Seattle, 1996 – 1999; Scientist
James River Corp., Washington, 1995-96; Scientist
Big Creek Lumber, Davenport, California, 1995; Scientist
Plumas Corp., California and USFS, Tahoe 1993-1995; Scientist
Peace Corps and World Wildlife Fund, St. Kitts, West Indies, 1991-1993; Scientist

Publications:

Rosenfeld, P.E., Spaeth, K.R., McCarthy, S.J. *et al.* Camp Lejeune Marine Cancer Risk Assessment for Exposure to Contaminated Drinking Water From 1955 to 1987. *Water Air Soil Pollut* **235**, 124 (2024). https://doi.org/10.1007/s11270-023-06863-y.

Rosenfeld P.E., Spaeth K.R., Remy L.L., Byers V., Muerth S.A., Hallman R,C., Summers-Evans J., Barker S. (2023) Perfluoroalkyl substances exposure in firefighters: Sources and implications, *Environmental Research*, Volume 220, https://doi.org/10.1016/j.envres.2022.115164.

Rosenfeld P.E. and Spaeth K.R., (2023) Authors' Response to Letter to the Editor from Bullock and Ramacciotti, *Water Air Soil Pollution* Volume 234, https://doi.org/10.1007/s11270-023-06165-3

Rosenfeld P. E., Spaeth K., Hallman R., Bressler R., Smith, G., (2022) Cancer Risk and Diesel Exhaust Exposure Among Railroad Workers. *Water Air Soil Pollution.* **233,** 171.

Remy, L.L., Clay T., Byers, V., **Rosenfeld P. E.** (2019) Hospital, Health, and Community Burden After Oil Refinery Fires, Richmond, California 2007 and 2012. *Environmental Health.* 18:48

Simons, R.A., Seo, Y. **Rosenfeld, P**., (2015) Modeling the Effect of Refinery Emission On Residential Property Value. *Journal of Real Estate Research*. 27(3):321-342

Chen, J. A, Zapata A. R., Sutherland A. J., Molmen, D.R., Chow, B. S., Wu, L. E., **Rosenfeld, P. E.,** Hesse, R. C., (2012) Sulfur Dioxide and Volatile Organic Compound Exposure To A Community In Texas City Texas Evaluated Using Aermod and Empirical Data. *American Journal of Environmental Science*, 8(6), 622-632.

Rosenfeld, P.E. & Feng, L. (2011). *The Risks of Hazardous Waste.* Amsterdam: Elsevier Publishing.

Cheremisinoff, N.P., & **Rosenfeld, P.E.** (2011). *Handbook of Pollution Prevention and Cleaner Production: Best Practices in the Agrochemical Industry*, Amsterdam: Elsevier Publishing.

Gonzalez, J., Feng, L., Sutherland, A., Waller, C., Sok, H., Hesse, R., **Rosenfeld, P.** (2010). PCBs and Dioxins/Furans in Attic Dust Collected Near Former PCB Production and Secondary Copper Facilities in Sauget, IL. *Procedia Environmental Sciences*. 113–125.

Feng, L., Wu, C., Tam, L., Sutherland, A.J., Clark, J.J., **Rosenfeld, P.E.** (2010). Dioxin and Furan Blood Lipid and Attic Dust Concentrations in Populations Living Near Four Wood Treatment Facilities in the United States. *Journal of Environmental Health*. 73(6), 34-46.

Cheremisinoff, N.P., & **Rosenfeld, P.E.** (2010). *Handbook of Pollution Prevention and Cleaner Production: Best Practices in the Wood and Paper Industries.* Amsterdam: Elsevier Publishing.

Cheremisinoff, N.P., & **Rosenfeld, P.E.,** (2009). *Handbook of Pollution Prevention and Cleaner Production: Best Practices in the Petroleum Industry*. Amsterdam: Elsevier Publishing.

Wu, C., Tam, L., Clark, J., **Rosenfeld, P**. (2009). Dioxin and furan blood lipid concentrations in populations living near four wood treatment facilities in the United States. *WIT Transactions on Ecology and the Environment, Air Pollution,* 123 (17), 319-327.

Cheremisinoff, N.P., **Rosenfeld, P.E.** Davletshin, A.R. (2008). ***Responsible Care***. Gulf Publishing. Texas.

Tam L. K., Wu C. D., Clark J. J. and **Rosenfeld, P.E.** (2008). A Statistical Analysis Of Attic Dust And Blood Lipid Concentrations Of Tetrachloro-p-Dibenzodioxin (TCDD) Toxicity Equivalency Quotients (TEQ) In Two Populations Near Wood Treatment Facilities. *Organohalogen Compounds*, 70, 002252-002255.

Tam L. K., Wu C. D., Clark J. J. and **Rosenfeld, P.E.** (2008). Methods For Collect Samples For Assessing Dioxins And Other Environmental Contaminants In Attic Dust: A Review. *Organohalogen Compounds*, 70, 000527-000530.

Hensley, A.R. A. Scott, J. J. J. Clark, **Rosenfeld, P.E.** (2007). Attic Dust and Human Blood Samples Collected near a Former Wood Treatment Facility. *Environmental Research*. 105, 194-197.

Rosenfeld, P.E., J. J. J. Clark, A. R. Hensley, M. Suffet. (2007). The Use of an Odor Wheel Classification for Evaluation of Human Health Risk Criteria for Compost Facilities. *Water Science & Technology* 55(5), 345-357.

Rosenfeld, P. E., M. Suffet. (2007). The Anatomy of Odour Wheels for Odours of Drinking Water, Wastewater, Compost And The Urban Environment. *Water Science & Technology* 55(5), 335-344.

Sullivan, P. J. Clark, J.J.J., Agardy, F. J., **Rosenfeld, P.E.** (2007). *Toxic Legacy, Synthetic Toxins in the Food, Water, and Air in American Cities.* Boston Massachusetts: Elsevier Publishing

Rosenfeld, P.E., and Suffet I.H. (2004). Control of Compost Odor Using High Carbon Wood Ash. *Water Science and Technology*. 49(9),171-178.

Rosenfeld P. E., J.J. Clark, I.H. (Mel) Suffet (2004). The Value of An Odor-Quality-Wheel Classification Scheme for The Urban Environment. *Water Environment Federation's Technical Exhibition and Conference (WEFTEC) 2004*. New Orleans, October 2-6, 2004.

Rosenfeld, P.E., and Suffet, I.H. (2004). Understanding Odorants Associated with Compost, Biomass Facilities, and the Land Application of Biosolids. *Water Science and Technology*. 49(9), 193-199.

Rosenfeld, P.E., and Suffet I.H. (2004). Control of Compost Odor Using High Carbon Wood Ash, *Water Science and Technology*, 49(9), 171-178.

Rosenfeld, P. E., Grey, M. A., Sellew, P. (2004). Measurement of Biosolids Odor and Odorant Emissions from Windrows, Static Pile and Biofilter. *Water Environment Research*. 76(4), 310-315.

Rosenfeld, P.E., Grey, M and Suffet, M. (2002). Compost Demonstration Project, Sacramento California Using High-Carbon Wood Ash to Control Odor at a Green Materials Composting Facility. *Integrated Waste Management Board Public Affairs Office*, Publications Clearinghouse (MS–6), Sacramento, CA Publication #442-02-008.

Rosenfeld, P.E., and C.L. Henry. (2001). Characterization of odor emissions from three different biosolids. *Water Soil and Air Pollution*. 127(1-4), 173-191.

Rosenfeld, P.E., and Henry C. L., (2000). Wood ash control of odor emissions from biosolids application. *Journal of Environmental Quality*. 29, 1662-1668.

Rosenfeld, P.E., C.L. Henry and D. Bennett. (2001). Wastewater dewatering polymer affects on biosolids odor emissions and microbial activity. *Water Environment Research*. 73(4), 363-367.

Rosenfeld, P.E., and C.L. Henry. (2001). Activated Carbon and Wood Ash Sorption of Wastewater, Compost, and Biosolids Odorants. *Water Environment Research*, 73, 388-393.

Rosenfeld, P.E., and Henry C. L., (2001). High carbon wood ash effect on biosolids microbial activity and odor. *Water Environment Research*. 131(1-4), 247-262.

Chollack, T. and **P. Rosenfeld. (**1998). Compost Amendment Handbook for Landscaping. Prepared for and distributed by the City of Redmond, Washington State.

Rosenfeld, P. E. (1992). The Mount Liamuiga Crater Trail. *Heritage Magazine of St. Kitts*, 3(2).

Rosenfeld, P. E. (1993). High School Biogas Project to Prevent Deforestation on St. Kitts. *Biomass Users Network*, 7(1).

Rosenfeld, P. E. (1998). Characterization, Quantification, and Control of Odor Emissions from Biosolids Application To Forest Soil. Doctoral Thesis. University of Washington College of Forest Resources.

Rosenfeld, P. E. (1994). Potential Utilization of Small Diameter Trees on Sierra County Public Land. Master's thesis reprinted by the Sierra County Economic Council. Sierra County, California.

Rosenfeld, P. E. (1991). How to Build a Small Rural Anaerobic Digester & Uses Of Biogas In The First And Third World. Bachelor's Thesis. University of California.

Presentations:

Rosenfeld, P.E., "The science for Perfluorinated Chemicals (PFAS): What makes remediation so hard?" Law Seminars International, (May 9-10, 2018) 800 Fifth Avenue, Suite 101 Seattle, WA.

Rosenfeld, P.E., Sutherland, A; Hesse, R.; Zapata, A. (October 3-6, 2013). Air dispersion modeling of volatile organic emissions from multiple natural gas wells in Decatur, TX. *44th Western Regional Meeting, American Chemical Society*. Lecture conducted from Santa Clara, CA.

Sok, H.L.; Waller, C.C.; Feng, L.; Gonzalez, J.; Sutherland, A.J.; Wisdom-Stack, T.; Sahai, R.K.; Hesse, R.C.; **Rosenfeld, P.E.** (June 20-23, 2010). Atrazine: A Persistent Pesticide in Urban Drinking Water. *Urban Environmental Pollution*. Lecture conducted from Boston, MA.

Feng, L.; Gonzalez, J.; Sok, H.L.; Sutherland, A.J.; Waller, C.C.; Wisdom-Stack, T.; Sahai, R.K.; La, M.; Hesse, R.C.; **Rosenfeld, P.E.** (June 20-23, 2010). Bringing Environmental Justice to East St. Louis, Illinois. *Urban Environmental Pollution.* Lecture conducted from Boston, MA.

Rosenfeld, P.E. (April 19-23, 2009). Perfluoroctanoic Acid (PFOA) and Perfluoroactane Sulfonate (PFOS) Contamination in Drinking Water From the Use of Aqueous Film Forming Foams (AFFF) at Airports in the United States. *2009 Ground Water Summit and 2009 Ground Water Protection Council Spring Meeting*, Lecture conducted from Tuscon, AZ.

Rosenfeld, P.E. (April 19-23, 2009). Cost to Filter Atrazine Contamination from Drinking Water in the United States" Contamination in Drinking Water From the Use of Aqueous Film Forming Foams (AFFF) at Airports in the United States. *2009 Ground Water Summit and 2009 Ground Water Protection Council Spring Meeting.* Lecture conducted from Tuscon, AZ.

Wu, C., Tam, L., Clark, J., **Rosenfeld, P**. (20-22 July (2009). Dioxin and furan blood lipid concentrations in populations living near four wood treatment facilities in the United States. Brebbia, C.A. and Popov, V., eds., *Air Pollution XVII: Proceedings of the Seventeenth International Conference on Modeling, Monitoring and Management of Air Pollution*. Lecture conducted from Tallinn, Estonia.

Rosenfeld, P. E. (October 15-18, 2007). Moss Point Community Exposure To Contaminants From A Releasing Facility. *The 23rd Annual International Conferences on Soils Sediment and Water.* Platform lecture conducted at University of Massachusetts, Amherst MA.

Rosenfeld, P. E. (October 15-18, 2007). The Repeated Trespass of Tritium-Contaminated Water Into A Surrounding Community Form Repeated Waste Spills From A Nuclear Power Plant. *The 23rd Annual International Conferences on Soils Sediment and Water*. Platform lecture conducted from University of Massachusetts, Amherst MA.

Rosenfeld, P. E. (October 15-18, 2007). Somerville Community Exposure To Contaminants From Wood Treatment Facility Emissions. The *23rd Annual International Conferences on Soils Sediment and Water*. Lecture conducted from University of Massachusetts, Amherst MA.

Rosenfeld P. E. (March 2007). Production, Chemical Properties, Toxicology, & Treatment Case Studies of 1,2,3-Trichloropropane (TCP). *The Association for Environmental Health and Sciences (AEHS) Annual Meeting*. Lecture conducted from San Diego, CA.

Rosenfeld P. E. (March 2007). Blood and Attic Sampling for Dioxin/Furan, PAH, and Metal Exposure in Florala, Alabama. *The AEHS Annual Meeting.* Lecture conducted from San Diego, CA.

Hensley A.R., Scott, A., **Rosenfeld P.E.,** Clark, J.J.J. (August 21 – 25, 2006). Dioxin Containing Attic Dust And Human Blood Samples Collected Near A Former Wood Treatment Facility. *The 26th International Symposium on Halogenated Persistent Organic Pollutants – DIOXIN2006*. Lecture conducted from Radisson SAS Scandinavia Hotel in Oslo Norway.

Hensley A.R., Scott, A., **Rosenfeld P.E.,** Clark, J.J.J. (November 4-8, 2006). Dioxin Containing Attic Dust And Human Blood Samples Collected Near A Former Wood Treatment Facility. *APHA 134 Annual Meeting & Exposition*. Lecture conducted from Boston Massachusetts.

Paul Rosenfeld Ph.D. (October 24-25, 2005). Fate, Transport and Persistence of PFOA and Related Chemicals. Mealey's C8/PFOA. *Science, Risk & Litigation Conference.* Lecture conducted from The Rittenhouse Hotel, Philadelphia, PA.

Paul Rosenfeld Ph.D. (September 19, 2005). Brominated Flame Retardants in Groundwater: Pathways to Human Ingestion, *Toxicology and Remediation PEMA Emerging Contaminant Conference*. Lecture conducted from Hilton Hotel, Irvine California.

Paul Rosenfeld Ph.D. (September 19, 2005). Fate, Transport, Toxicity, And Persistence of 1,2,3-TCP. *PEMA Emerging Contaminant Conference.* Lecture conducted from Hilton Hotel in Irvine, California.

Paul Rosenfeld Ph.D. (September 26-27, 2005). Fate, Transport and Persistence of PDBEs. *Mealey's Groundwater Conference.* Lecture conducted from Ritz Carlton Hotel, Marina Del Ray, California.

Paul Rosenfeld Ph.D. (June 7-8, 2005). Fate, Transport and Persistence of PFOA and Related Chemicals. *International Society of Environmental Forensics: Focus on Emerging Contaminants*. Lecture conducted from Sheraton Oceanfront Hotel, Virginia Beach, Virginia.

Paul Rosenfeld Ph.D. (July 21-22, 2005). Fate Transport, Persistence and Toxicology of PFOA and Related Perfluorochemicals. *2005 National Groundwater Association Ground Water and Environmental Law Conference*. Lecture conducted from Wyndham Baltimore Inner Harbor, Baltimore Maryland.

Paul Rosenfeld Ph.D. (July 21-22, 2005). Brominated Flame Retardants in Groundwater: Pathways to Human Ingestion, Toxicology and Remediation. *2005 National Groundwater Association Ground Water and Environmental Law Conference.* Lecture conducted from Wyndham Baltimore Inner Harbor, Baltimore Maryland.

Paul Rosenfeld, Ph.D. and James Clark Ph.D. and Rob Hesse R.G. (May 5-6, 2004). Tert-butyl Alcohol Liability and Toxicology, A National Problem and Unquantified Liability. *National Groundwater Association. Environmental Law Conference*. Lecture conducted from Congress Plaza Hotel, Chicago Illinois.

Paul Rosenfeld, Ph.D. (March 2004). Perchlorate Toxicology. *Meeting of the American Groundwater Trust*. Lecture conducted from Phoenix Arizona.

Hagemann, M.F., **Paul Rosenfeld, Ph.D.** and Rob Hesse (2004). Perchlorate Contamination of the Colorado River. *Meeting of tribal representatives*. Lecture conducted from Parker, AZ.

Paul Rosenfeld, Ph.D. (April 7, 2004). A National Damage Assessment Model for PCE and Dry Cleaners. *Drycleaner Symposium. California Ground Water Association*. Lecture conducted from Radison Hotel, Sacramento, California.

Rosenfeld, P. E., Grey, M., (June 2003) Two stage biofilter for biosolids composting odor control. *Seventh International In Situ And On Site Bioremediation Symposium Battelle Conference* Orlando, FL.

Paul Rosenfeld, Ph.D. and James Clark Ph.D. (February 20-21, 2003) Understanding Historical Use, Chemical Properties, Toxicity and Regulatory Guidance of 1,4 Dioxane. *National Groundwater Association. Southwest Focus Conference. Water Supply and Emerging Contaminants.* Lecture conducted from Hyatt Regency Phoenix Arizona.

Paul Rosenfeld, Ph.D. (February 6-7, 2003). Underground Storage Tank Litigation and Remediation. *California CUPA Forum*. Lecture conducted from Marriott Hotel, Anaheim California.

Paul Rosenfeld, Ph.D. (October 23, 2002) Underground Storage Tank Litigation and Remediation. *EPA Underground Storage Tank Roundtable*. Lecture conducted from Sacramento California.

Rosenfeld, P.E. and Suffet, M. (October 7- 10, 2002). Understanding Odor from Compost, *Wastewater and Industrial Processes. Sixth Annual Symposium on Off Flavors in the Aquatic Environment. International Water Association*. Lecture conducted from Barcelona Spain.

Rosenfeld, P.E. and Suffet, M. (October 7- 10, 2002). Using High Carbon Wood Ash to Control Compost Odor. *Sixth Annual Symposium on Off Flavors in the Aquatic Environment. International Water Association*. Lecture conducted from Barcelona Spain.

Rosenfeld, P.E. and Grey, M. A. (September 22-24, 2002). Biocycle Composting for Coastal Sage Restoration. *Northwest Biosolids Management Association*. Lecture conducted from Vancouver Washington.

Rosenfeld, P.E. and Grey, M. A. (November 11-14, 2002). Using High-Carbon Wood Ash to Control Odor at a Green Materials Composting Facility. *Soil Science Society Annual Conferen*ce. Lecture conducted from Indianapolis, Maryland.

Rosenfeld. P.E. (September 16, 2000). Two stage biofilter for biosolids composting odor control. *Water Environment Federation.* Lecture conducted from Anaheim California.

Rosenfeld. P.E. (October 16, 2000). Wood ash and biofilter control of compost odor. *Biofest.* Lecture conducted from Ocean Shores, California.

Rosenfeld, P.E. (2000). Bioremediation Using Organic Soil Amendments. *California Resource Recovery Association*. Lecture conducted from Sacramento California.

Rosenfeld, P.E., C.L. Henry, R. Harrison. (1998). Oat and Grass Seed Germination and Nitrogen and Sulfur Emissions Following Biosolids Incorporation with High-Carbon Wood-Ash. *Water Environment Federation 12th Annual Residuals and Biosolids Management Conference Proceedings*. Lecture conducted from Bellevue Washington.

Rosenfeld, P.E., and C.L. Henry. (1999). An evaluation of ash incorporation with biosolids for odor reduction. *Soil Science Society of America*. Lecture conducted from Salt Lake City Utah.

Rosenfeld, P.E., C.L. Henry, R. Harrison. (1998). Comparison of Microbial Activity and Odor Emissions from Three Different Biosolids Applied to Forest Soil. *Brown and Caldwell*. Lecture conducted from Seattle Washington.

Rosenfeld, P.E., C.L. Henry. (1998). Characterization, Quantification, and Control of Odor Emissions from Biosolids Application To Forest Soil. *Biofest*. Lecture conducted from Lake Chelan, Washington.

Rosenfeld, P.E, C.L. Henry, R. Harrison. (1998). Oat and Grass Seed Germination and Nitrogen and Sulfur Emissions Following Biosolids Incorporation with High-Carbon Wood-Ash. Water Environment Federation 12th Annual Residuals and Biosolids Management Conference Proceedings. Lecture conducted from Bellevue Washington.

Rosenfeld, P.E., C.L. Henry, R. B. Harrison, and R. Dills. (1997). Comparison of Odor Emissions from Three Different Biosolids Applied to Forest Soil. *Soil Science Society of America*. Lecture conducted from Anaheim California.

Teaching Experience:

UCLA Department of Environmental Health (Summer 2003 through 20010) Taught Environmental Health Science 100 to students, including undergrad, medical doctors, public health professionals and nurses. The course focused on the health effects of environmental contaminants.

National Ground Water Association, Successful Remediation Technologies. Custom Course in Sante Fe, New Mexico. May 21, 2002. Focused on fate and transport of fuel contaminants associated with underground storage tanks.

National Ground Water Association; Successful Remediation Technologies Course in Chicago Illinois. April 1, 2002. Focused on fate and transport of contaminants associated with Superfund and RCRA sites.

California Integrated Waste Management Board, April and May 2001. Alternative Landfill Caps Seminar in San Diego, Ventura, and San Francisco. Focused on both prescriptive and innovative landfill cover design.

UCLA Department of Environmental Engineering, February 5, 2002. Seminar on Successful Remediation Technologies focusing on Groundwater Remediation.

University Of Washington, Soil Science Program, Teaching Assistant for several courses including Soil Chemistry, Organic Soil Amendments, and Soil Stability.

U.C. Berkeley, Environmental Science Program Teaching Assistant for Environmental Science 10.

Academic Grants Awarded:

California Integrated Waste Management Board. $41,000 grant awarded to UCLA Institute of the Environment. Goal: To investigate the effect of high carbon wood ash on volatile organic emissions from compost. 2001.

Synagro Technologies, Corona California: $10,000 grant awarded to San Diego State University.
Goal: investigate the effect of biosolids for restoration and remediation of degraded coastal sage soils. 2000.

King County, Department of Research and Technology, Washington State. $100,000 grant awarded to University of Washington: Goal: To investigate odor emissions from biosolids application and the effect of polymers and ash on VOC emissions. 1998.

Northwest Biosolids Management Association, Washington State. $20,000 grant awarded to investigate the effect of polymers and ash on VOC emissions from biosolids. 1997.

James River Corporation, Oregon: $10,000 grant was awarded to investigate the success of genetically engineered Poplar trees with resistance to round-up. 1996.

United State Forest Service, Tahoe National Forest: $15,000 grant was awarded to investigating fire ecology of the Tahoe National Forest. 1995.

Kellogg Foundation, Washington D.C. $500 grant was awarded to construct a large anaerobic digester on St. Kitts in West Indies. 1993

Deposition and/or Trial Testimony:

In the District Court of Harris County Texas
Mt Davis Interest, Inc v Sesco Cement Corp
Cause No 2023-26512
Trial 6-6-2-25

In the United States Southern District of New York
Gallo vs Avon Products Inc., et al
Civil Action No.: 1:23-cv-2023
Deposition 4-24-2025

In Vanderburgh Superior Court 5, County of Vanderburgh, Indiana
Markello v CSX
Civil Action No 82D05-2011-CT-004962
Deposition 3-26-25

Iin the Circuit Court of Cook County Illinois
Jarosiewicz v Northeast Regional Railroad
Case No 2023 L 002290
Deposition 2-27-25

In the District Court 191st Judicial District Dallas County
Acklin v Poly America International
Cause No DC-22-08610
Deposition 1-8-2025

United States District Court, Norther District of California
Asustin Vs Monsanto
Case No 2:23-cv-272
Deposition 12-20-25

In Jefferson Circuit Court Division One, Louisville, Kentucky
Stafford vs, CSX
Case No. 18-CI-001790

Deposition: 8-27-24

In the Twenty-Second Judicial Circuit of St. Louis. State of Missouri
Patricia Godfrey vs, Amtrak
Case No. 2122-CC-00525
Deposition: 7-17-24

In the Circuit Court of Jefferson County Alabama
Linda Early Vs. CSX
Case number CV-2021-00241
Deposition 6-24-24

In the Court of Common Please Lucas County, Ohio
Brenda Conkright vs. CSX
Case No. G-4801-CI-0202102664-000
Deposition: 6-4-24

In the Commonwealth of Kentucky, Greenup Circuit Court
Patsy Sue Napier vs. CSX
Case No. 19-CI-0012
Deposition: 5-8-2-24

In United States District Court of Hawaii
Patrick Feindt, Jr. et al. vs. The United States of America
Case No. 1:22-cv-LEK-KJM
Trial 3-29-24 and 4-5-24

In the District Court of Hood County State of Texas
Artie Gray vs. Exxon Mobil
Case No. C-2018047
Rosenfeld Deposition:4-22-2024

In the Elkhart Superior Court State of Indiana
Estate of Clark Stacy vs. Penn Central Corporation
Cause No 2D01-2001-CT-00007
Rosenfeld Deposition 1-25-2024 and 3-7-2024

In the Circuit Court of Trempealeau County, State of Wisconsin
Michael J. Sylla et al. vs. High-Crush Whitehall LLC
Case No. 2019-CV-63, 2019-CV-64, 2019-CV-65, 2019-CV-66
Rosenfeld Deposition: 3-5-2024

In the Circuit Court of Trempealeau County, State of Wisconsin
Leland Drangstveit vs. High-Crush Blair LLC
Case No. 19-CV-66
Rosenfeld Deposition 3-5-2024

In the Circuit Court of Jefferson County Alabama
Donald Lee Ashworth vs. CSX Transportation Inc.
Case No CV-2021-901261
Rosenfeld Deposition 1-23-2024

In the United States District Court for the Eastern District of Wisconsin
Gary L Siepe vs. Soo Line Railroad
Case No. 2:21-cv-00919
Rosenfeld Deposition 1-19-2024

In the United States District Court for the Western District of Louisiana
Ricky Bush v. Clean Harbors Colfax LLC
Case No. 1:22-cv-02026-DDD-JPM
Rosenfeld Deposition 12-18-2023 and 1-15-2024

In United States District Court of Hawaii
Patrick Feindt, Jr. et al. vs. The United States of America
Case No. 1:22-cv-LEK-KJM
Rosenfeld Deposition 11-29-2023

In the Circuit Court for the Twentieth Judicial Circuit St. Clair County, Illinois
Timothy Gray vs. Rural King et al.
Case No 2022-LA-355
Rosenfeld Deposition 9-26-2023

In United States District Court Eastern District of Wisconsin
Gary L. Siepe vs. Soo Line Railroad Company
Case No. 2:21-cv-00919
Rosenfeld Deposition 9-15-2023

In the Circuit Court of Cook County Illinois
Donald Fox vs. BNSF
Case No. 2021 L12
Rosenfeld Deposition 9-12-2023

In the Court of Common Please Cuyahoga County, Ohio
Thomas Schleich vs. Penn Central Corporation
Lead Case No. CV-20-939184
Rosenfeld Deposition 8-27-2023

In the Circuit Court of Jackson County Missouri at Kansas City
Timothy Dalsing vs. BNSF
Case No. No. 2216-cv06539
Rosenfeld Deposition 7-28-2023

In the United States District Court for the Southern District of Texas Houston Division
International Terminals Company LLC Deer Park Fire Litigation
Lead Case No. 4:19-cv-01460
Rosenfeld Deposition 7-25-2023

In the Circuit Court of Livingston County Missouri
Shirley Ralls vs. Canadian Pacific Railway and Soo Lind Railroad
Case No. 28LV-CV0020
Rosenfeld Daubert Hearing 7-18-2023 Trial Testimony 7-19-2023

In the Circuit Court of Cook County Illinois
Brenda Wright vs. Penn Central and Conrail
Case No. No. 2032L003966
Rosenfeld Deposition 6-13-2023

In the Circuit Court Common Please Philadelphia of Jefferson County Alabama
Frank Belle vs. Birmingham Southern Railroad Company et al.
Case No. 01-cv-2021-900901.00
Rosenfeld Deposition 4-6-2023

In the Circuit Court of Jefferson County Alabama
Linda De Gregorio vs. Penn Central
Case No. 002278
Rosenfeld Deposition 3-27-20203

In the United States District Court Eastern District of New York
Rosalie Romano et al. vs. Northrup Grumman Corporation
Case No. 16-cv-5760
Rosenfeld Deposition 3-16-2023

In the Superior Court of Washington, Spokane County
Judy Cundy vs. BNSF
Case No. 21-2-03718-32
Rosenfeld Deposition 3-9-2023

In The Court of Common Pleas of Philadelphia County, PA Civil Trial Division
Feaster v Conrail
Case No. 001075
Rosenfeld Deposition 2-1-2023

In United States District Court for the Central District of Illinois
Sherman vs. BNSF
Case No. 3:17-cv-01192
Rosenfeld Deposition 1-18-2023

In United States District Court District of Colorado
Gonzales vs. BNSF
Case No. 1:21-cv-01690
Rosenfeld Deposition 1-17-2023

In United States District Court District of Colorado
Abeyta vs. BNSF
Case No. 1:21-cv-01689-KMT
Rosenfeld Deposition 1-3-2023

In United States District Court For The Easter District of Louisiana
Nathaniel Smith vs. Illinois Central Railroad
Case No. 2:21-cv-01235
Rosenfeld Deposition 11-30-2022

In the Superior Court of the State of California, County of San Bernardino
Billy Wildrick, Plaintiff vs. BNSF Railway Company
Case No. CIVDS1711810
Rosenfeld Deposition 10-17-2022

In the State Court of Bibb County, State of Georgia
Richard Hutcherson, Plaintiff vs Norfolk Southern Railway Company
Case No. 10-SCCV-092007
Rosenfeld Deposition 10-6-2022

In the Civil District Court of the Parish of Orleans, State of Louisiana
Millard Clark, Plaintiff vs. Dixie Carriers, Inc. et al.
Case No. 2020-03891
Rosenfeld Deposition 9-15-2022

In The Circuit Court of Livingston County, State of Missouri, Circuit Civil Division

Shirley Ralls, Plaintiff vs. Canadian Pacific Railway and Soo Line Railroad
Case No. 18-LV-CC0020
Rosenfeld Deposition 9-7-2022

In The Circuit Court of the 13th Judicial Circuit Court, Hillsborough County, Florida Civil Division
Jonny C. Daniels, Plaintiff vs. CSX Transportation Inc.
Case No. 20-CA-5502
Rosenfeld Deposition 9-1-2022

In The Circuit Court of St. Louis County, State of Missouri
Kieth Luke et. al. Plaintiff vs. Monsanto Company et. al.
Case No. 19SL-CC03191
Rosenfeld Deposition 8-25-2022

In The Circuit Court of the 13th Judicial Circuit Court, Hillsborough County, Florida Civil Division
Jeffery S. Lamotte, Plaintiff vs. CSX Transportation Inc.
Case No. NO. 20-CA-0049
Rosenfeld Deposition 8-22-2022

In State of Minnesota District Court, County of St. Louis Sixth Judicial District
Greg Bean, Plaintiff vs. Soo Line Railroad Company
Case No. 69-DU-CV-21-760
Rosenfeld Deposition 8-17-2022

In United States District Court Western District of Washington at Tacoma, Washington
John D. Fitzgerald Plaintiff vs. BNSF
Case No. 3:21-cv-05288-RJB
Rosenfeld Deposition 8-11-2022

In Circuit Court of the Sixth Judicial Circuit, Macon Illinois
Rocky Bennyhoff Plaintiff vs. Norfolk Southern
Case No. 20-L-56
Rosenfeld Deposition 8-3-2022, Trial 1-10-2023

In Court of Common Pleas, Hamilton County Ohio
Joe Briggins Plaintiff vs. CSX
Case No. A2004464
Rosenfeld Deposition 6-17-2022

In the Superior Court of the State of California, County of Kern
George LaFazia vs. BNSF Railway Company.
Case No. BCV-19-103087
Rosenfeld Deposition 5-17-2022

In the Circuit Court of Cook County Illinois
Bobby Earles vs. Penn Central et. al.
Case No. 2020-L-000550
Rosenfeld Deposition 4-16-2022

In United States District Court Easter District of Florida
Albert Hartman Plaintiff vs. Illinois Central
Case No. 2:20-cv-1633
Rosenfeld Deposition 4-4-2022

In the Circuit Court of the 4th Judicial Circuit, in and For Duval County, Florida
Barbara Steele vs. CSX Transportation

Case No.16-219-Ca-008796
Rosenfeld Deposition 3-15-2022

In United States District Court Easter District of New York
Romano et al. vs. Northrup Grumman Corporation
Case No. 16-cv-5760
Rosenfeld Deposition 3-10-2022

In the Circuit Court of Cook County Illinois
Linda Benjamin vs. Illinois Central
Case No. No. 2019 L 007599
Rosenfeld Deposition 1-26-2022

In the Circuit Court of Cook County Illinois
Donald Smith vs. Illinois Central
Case No. No. 2019 L 003426
Rosenfeld Deposition 1-24-2022

In the Circuit Court of Cook County Illinois
Jan Holeman vs. BNSF
Case No. 2019 L 000675
Rosenfeld Deposition 1-18-2022

In the State Court of Bibb County State of Georgia
Dwayne B. Garrett vs. Norfolk Southern
Case No. 20-SCCV-091232
Rosenfeld Deposition 11-10-2021

In the Circuit Court of Cook County Illinois
Joseph Ruepke vs. BNSF
Case No. 2019 L 007730
Rosenfeld Deposition 11-5-2021

In the United States District Court For the District of Nebraska
Steven Gillett vs. BNSF
Case No. 4:20-cv-03120
Rosenfeld Deposition 10-28-2021

In the Montana Thirteenth District Court of Yellowstone County
James Eadus vs. Soo Line Railroad and BNSF
Case No. DV 19-1056
Rosenfeld Deposition 10-21-2021

In the Circuit Court Of The Twentieth Judicial Circuit, St Clair County, Illinois
Martha Custer et al. vs Cerro Flow Products, Inc.
Case No. 0i9-L-2295
Rosenfeld Deposition 5-14-2021
Trial October 8-4-2021

In the Circuit Court of Cook County Illinois
Joseph Rafferty vs. Consolidated Rail Corporation and National Railroad Passenger Corporation d/b/a AMTRAK,
Case No. 18-L-6845
Rosenfeld Deposition 6-28-2021

In the United States District Court For the Northern District of Illinois

Theresa Romcoe vs. Northeast Illinois Regional Commuter Railroad Corporation d/b/a METRA Rail
Case No. 17-cv-8517
Rosenfeld Deposition 5-25-2021

In the Superior Court of the State of Arizona In and For the Cunty of Maricopa
Mary Tryon et al. vs. The City of Pheonix v. Cox Cactus Farm, L.L.C., Utah Shelter Systems, Inc.
Case No. CV20127-094749
Rosenfeld Deposition 5-7-2021

In the United States District Court for the Eastern District of Texas Beaumont Division
Robinson, Jeremy et al vs. CNA Insurance Company et al.
Case No. 1:17-cv-000508
Rosenfeld Deposition 3-25-2021

In the Superior Court of the State of California, County of San Bernardino
Gary Garner, Personal Representative for the Estate of Melvin Garner vs. BNSF Railway Company.
Case No. 1720288
Rosenfeld Deposition 2-23-2021

In the Superior Court of the State of California, County of Los Angeles, Spring Street Courthouse
Benny M Rodriguez vs. Union Pacific Railroad, A Corporation, et al.
Case No. 18STCV01162
Rosenfeld Deposition 12-23-2020

In the Circuit Court of Jackson County, Missouri
Karen Cornwell, Plaintiff, vs. Marathon Petroleum, LP, Defendant.
Case No. 1716-CV10006
Rosenfeld Deposition 8-30-2019

In the United States District Court For The District of New Jersey
Duarte et al, Plaintiffs, vs. United States Metals Refining Company et. al. Defendant.
Case No. 2:17-cv-01624-ES-SCM
Rosenfeld Deposition 6-7-2019

In the United States District Court of Southern District of Texas Galveston Division
M/T Carla Maersk vs. Conti 168., Schiffahrts-GMBH & Co. Bulker KG MS "Conti Perdido" Defendant.
Case No. 3:15-CV-00106 consolidated with 3:15-CV-00237
Rosenfeld Deposition 5-9-2019

In The Superior Court of the State of California In And For The County Of Los Angeles – Santa Monica
Carole-Taddeo-Bates et al., vs. Ifran Khan et al., Defendants
Case No. BC615636
Rosenfeld Deposition 1-26-2019

In The Superior Court of the State of California In And For The County Of Los Angeles – Santa Monica
The San Gabriel Valley Council of Governments et al. vs El Adobe Apts. Inc. et al., Defendants
Case No. BC646857
Rosenfeld Deposition 10-6-2018; Trial 3-7-19

In United States District Court For The District of Colorado
Bells et al. Plaintiffs vs. The 3M Company et al., Defendants
Case No. 1:16-cv-02531-RBJ
Rosenfeld Deposition 3-15-2018 and 4-3-2018

In The District Court Of Regan County, Texas, 112th Judicial District
Phillip Bales et al., Plaintiff vs. Dow Agrosciences, LLC, et al., Defendants

Cause No. 1923
Rosenfeld Deposition 11-17-2017

In The Superior Court of the State of California In And For The County Of Contra Costa
Simons et al., Plaintifs vs. Chevron Corporation, et al., Defendants
Cause No. C12-01481
Rosenfeld Deposition 11-20-2017

In The Circuit Court of The Twentieth Judicial Circuit, St Clair County, Illinois
Martha Custer et al., Plaintiff vs. Cerro Flow Products, Inc., Defendants
Case No.: No. 0i9-L-2295
Rosenfeld Deposition 8-23-2017

In United States District Court For The Southern District of Mississippi
Guy Manuel vs. The BP Exploration et al., Defendants
Case No. 1:19-cv-00315-RHW
Rosenfeld Deposition 4-22-2020

In The Superior Court of the State of California, For The County of Los Angeles
Warrn Gilbert and Penny Gilber, Plaintiff vs. BMW of North America LLC
Case No. LC102019 (c/w BC582154)
Rosenfeld Deposition 8-16-2017, Trail 8-28-2018

In the Northern District Court of Mississippi, Greenville Division
Brenda J. Cooper, et al., Plaintifs, vs. Meritor Inc., et al., Defendants
Case No. 4:16-cv-52-DMB-JVM
Rosenfeld Deposition July 2017

In The Superior Court of the State of Washington, County of Snohomish
Michael Davis and Julie Davis et al., Plaintiff vs. Cedar Grove Composting Inc., Defendants
Case No. 13-2-03987-5
Rosenfeld Deposition, February 2017
Trial March 2017

In The Superior Court of the State of California, County of Alameda
Charles Spain., Plaintiff vs. Thermo Fisher Scientific, et al., Defendants
Case No. RG14711115
Rosenfeld Deposition September 2015

In The Iowa District Court In And For Poweshiek County
Russell D. Winburn, et al., Plaintiffs vs. Doug Hoksbergen, et al., Defendants
Case No. LALA002187
Rosenfeld Deposition August 2015

In The Circuit Court of Ohio County, West Virginia
Robert Andrews, et al. vs. Antero, et al.
Civil Action No. 14-C-30000
Rosenfeld Deposition June 2015

In The Iowa District Court for Muscatine County
Laurie Freeman et. al. Plaintiffs vs. Grain Processing Corporation, Defendant
Case No. 4980
Rosenfeld Deposition May 2015

In the Circuit Court of the 17th Judicial Circuit, in and For Broward County, Florida
Walter Hinton, et. al. Plaintiff, vs. City of Fort Lauderdale, Florida, a Municipality, Defendant.

Case No. CACE07030358 (26)
Rosenfeld Deposition December 2014

In the United States District Court Western District of Oklahoma
Tommy McCarty, et al., Plaintiffs, vs. Oklahoma City Landfill, LLC d/b/a Southeast Oklahoma City Landfill, et al. Defendants.
Case No. 5:12-cv-01152-C
Rosenfeld Deposition: July 2014

In the County Court of Dallas County Texas
Lisa Parr et al, *Plaintiff*, vs. Aruba et al, *Defendant.*
Case Number cc-11-01650-E
Rosenfeld Deposition: March and September 2013
Rosenfeld Trial: April 2014

In the County of Kern, Unlimited Jurisdiction
Rose Propagation Services vs. Heppe Enterprises
Case No. S-1500-CV-278190, LHB
Rosenfeld Deposition: May 2014

In the Circuit Court of Baltimore County Maryland
Philip E. Cvach, II et al., *Plaintiffs* vs. Two Farms, Inc. d/b/a Royal Farms, Defendants
Case Number: 03-C-12-012487 OT
Rosenfeld Deposition: September 2013

In the Court of Galveston County, Texas 56th Judicial District
MDL Litigation Regarding Texas City Refinery Ultracracker Emission Event Litigation
Cause No. 10-UC-0001
Rosenfeld Deposition: March 2013
Rosenfeld Trial: September 2013

In the United States District Court of Southern District of Texas Galveston Division
Kyle Cannon, Eugene Donovan, Genaro Ramirez, Carol Sassler, and Harvey Walton, each Individually and on behalf of those similarly situated, *Plaintiffs*, vs. BP Products North America, Inc., *Defendant.*
Case 3:10-cv-00622
Rosenfeld Deposition: February 2012
Rosenfeld Trial: April 2013

In the United States District court of Southern District of California
United States of America, Plaintiff vs. 2,560 Acres of Land, more or less, located in Imperial County, State of California; and Donald L. Crawford, et. al.
Civil No. 3:11-cv-02258-IEG-RBB
Rosenfeld Deposition: December 2012, January 2013

In the Court of Common Pleas of Tuscarawas County Ohio
John Michael Abicht, et al., Plaintiffs, vs. Republic Services, Inc., et al., Defendants
Case No. 2008 CT 10 0741 (Cons. w/ 2009 CV 10 0987)
Rosenfeld Deposition October 2012

In the Court of Common Pleas of Tuscarawas County Ohio
John Michael Abicht, et al., *Plaintiffs*, vs. Republic Services, Inc., et al., *Defendants*
Case Number: 2008 CT 10 0741 (Cons. w/ 2009 CV 10 0987)
Rosenfeld Deposition: October 2012

In the United States District Court for the Middle District of Alabama, Northern Division
James K. Benefield, et al., Plaintiffs, vs. International Paper Company, Defendant.

August 1, 2025

Advocates for the Environment

A non-profit public-interest law firm
and environmental advocacy organization

Leilani Henry
Assistant Planner
City of Hesperia
9700 Seventh Avenue
City of Hesperia, CA 92345

Via U.S. Mail and email to lhenry@hesperia.gov

Re: Comments on Draft Environmental Impact Report for Phelan 20 Project, SCH No. 2024020980

Dear Ms. Henry:

Advocates for the Environment submits the comments in this letter regarding the Draft Environmental Impact Report (**DEIR**) for the Phelan 20 Project (**Project**). The Project Site is located near Phelan Road and Los Banos Avenue in the City of Hesperia (**City**), County of San Bernardino. The Project proposes to develop a building with 419,840 square feet of industrial warehouse space and 5,000 square feet of office space on the 22.61-acre Project Site. We have reviewed the DEIR and submit comments regarding the sufficiency of the DEIR's Greenhouse-Gas (**GHG**) analysis under the California Environmental Quality Act (**CEQA**). 6-1

The City should require the Project to be net-zero

Given the current regulatory context and technological advancements, a net-zero significance threshold is feasible and extensively supportable. GHG emissions from buildings, including indirect emissions from offsite generation of electricity, direct emissions produced onsite, and from construction with cement and steel, amounted to 21% of global GHG emissions in 2019. (IPCC Sixth Assessment Report, Climate Change 2022, WGIII, Mitigation of Climate Change, p. 9-4.) This is a considerable portion of global GHG emissions. It is much more affordable to construct new building projects to be net-zero than to obtain the same level of GHG reductions by expensively retrofitting older buildings to comply with climate change regulations. Climate damages will keep increasing until we reach net zero GHG emissions, and there is a California state policy requiring the state to be net-zero by 2045. It therefore is economically unsound to construct new buildings that are not net-zero. 6-2

Environmental groups have achieved incredible outcomes by litigation under CEQA. Two of the largest mixed-use development projects in the history of California, Newhall Ranch (now FivePoint Valencia), and Centennial (part of Tejon Ranch) decided to move forward as net-zero communities after losing CEQA lawsuits to environmental groups. The ability for 6-3

these large projects to become net-zero indicates that it is achievable, even for large-scale developments. The Applicant for this Project should do the same. 6-3 Cont.

We urge the City to adopt net-zero as the GHG significance threshold for this project. This threshold is well-supported by plans for the reduction of GHG emissions in California, and particularly the CARB Climate Change Scoping Plans. The CARB 2017 Scoping Plan states that "achieving no net additional increase in GHG emissions, resulting in no contribution to GHG impacts, is an appropriate overall objective for new development." (CARB 2017 Scoping Plan, p. 101.) Additionally, the CARB 2022 Scoping Plan reaffirms the necessity of a net zero target by expressing: "it is clear that California must transition away from fossil fuels to zero-emission technologies with all possible speed … in order to meet our GHG and air quality targets." (CARB 2022 Scoping Plan, p. 184.) CARB further encourages a net-zero threshold in its strategies for local actions in Appendix D to the 2022 Scoping Plan. (CARB 2022 Scoping Plan, Appendix D p. 24-26.) Moving this Project forward as a net-zero project would not only be the right thing for the City to do, but also would help protect the City and the Applicant from CEQA GHG litigation. 6-4

DEIR's GHG Analysis Violates CEQA

The City adopted two GHG significance thresholds based on the CEQA Guidelines Appendix G. Under the first threshold, whether the Project would "[g]enerate greenhouse gas emissions, either directly or indirectly, that may have a significant impact on the environment," the City used the South Coast Air Quality Management District (**SCAQMD**) recommended threshold of 3,000 MTCO2e to determine that the Project would have a significant impact, even after implementation of mitigation. (DEIR, pp. 4.6-18, 4.6-23 –4.6-24.) The DEIR estimated that Project would emit 10,114.11 MTCO2e per year. (DEIR, p. 4.6-24.) 6-5

Despite finding the GHG impact significant as applied to the chosen numerical threshold, and cumulatively significant, the City nonetheless determined that the Project would have a less-than-significant impact under its second threshold, whether the Project would conflict with applicable plans. Yet, this significance determination is not supported by substantial evidence because the Project would conflict with several applicable plans, as discussed further below. 6-6

Consistency with Applicable Plans

The DEIR discusses the Project's consistency with the City of Hesperia's 2010 Climate Action Plan (**CAP**), the Southern California Association of Governments' (**SCAG**) Regional Transportation Plan/Sustainable Communities Strategy (**RTP/SCS**), California's 2017 Climate Change Scoping Plan Update (**2017 Scoping Plan**), developed by the California Air 6-7

Resources Board (**CARB**), as well as the most recent update, the 2022 Scoping Plan for Achieving Carbon Neutrality (**2022 Scoping Plan**). After analyzing several actions and strategies from those identified applicable plans, the City determined that the Project would not conflict with the second significance threshold. However, this significance analysis violates CEQA because it ignores the Project's conflicts with the 2022 Scoping Plan and 2017 Scoping Plan, and fails to analyze consistency with all applicable plans, such as Executive Order (**EO**) B-55-18, the Carbon Neutrality Executive Order.

6-7 Cont.

The Project would conflict with the 2022 Scoping Plan

The Project is inconsistent with the 2022 Scoping Plan's key targets for electrification and decarbonization, yet the DEIR fails to address several inconsistencies. The 2022 Scoping Plan places particular emphasis on decarbonizing industrial facilities by "displacing fossil fuel use with a mix of electrification, solar thermal heat, biomethane, low- or zero-carbon hydrogen, and other low-carbon fuels to provide energy for heat and reduce combustion emissions" (2022 Scoping Plan, p. 208). The Project does not appear to be consistent with this goal. The Project's electricity would be provided through Southern California Edison (**SCE**). (DEIR, pp. 4.11-5.) The most recent SCE power mix indicates that only about one-third of its energy resources come from eligible renewable energy sources.[1] This is not in alignment with 2022 Scoping Plan goals. To demonstrate consistency with the decarbonization efforts of the 2022 Scoping Plan, the Project should opt into SCE's Green Rate 100% Option or use on-site renewable electricity generation for 100% of its energy.

6-8

Additionally, the Project is likely to rely on diesel fuel in its operations, potentially conflicting with the 2022 Scoping Plan's objectives. Although the DEIR mentions several measures and regulations aimed at reducing GHG emissions from mobile sources, such as the Advanced Clean Truck Regulation (DEIR, p. 4.6-14), it does not specifically address how the Project will contribute to California's goals to electrify vehicle fleets. Therefore, the Project conflicts with the goals of the 2022 Scoping Plan by not adequately reducing its reliance on fossil fuels and failing to incorporate sufficient low- or zero-carbon energy sources.

The Project would conflict with the 2017 Scoping Plan

The 2017 Scoping Plan sets out statewide goals for total GHG emissions targets of 6 MTCO2e/capita by 2030, and 2 MTCO2e/capita by 2050 (2017 CARB Scoping Plan,[2] p. 99). With 351 employees (DEIR, p. 5-12), the Project's annual per-capita GHG emissions would amount to nearly 30 MTCO2e.[3] The Project would greatly exceed both the 2030 and 2050

6-9

[1] SCE 2022 Power Content Label, available at: https://www.sce.com/sites/default/files/custom-files/PDF_Files/SCE_2022_Power_Content_Label_B%26W.pdf, last accessed August 1, 2025.
[2] https://ww2.arb.ca.gov/sites/default/files/classic/cc/scopingplan/scoping_plan_2017.pdf
[3] 10,114.11 MTCO2e ÷ 351 *employees* = 28.82 MTCO2e, rounded to the nearest hundredth

targets, conflicting with the express goals of the 2017 Scoping Plan. Based on these inconsistencies with the chosen applicable plans, the Project's GHG emissions would be significant under the second threshold.

6-9 Cont.

The EIR should have analyzed all applicable plans

The City chose, as its second GHG threshold, whether the Project would "[c]onflict with an applicable plan, policy, or regulation adopted for the purpose of reducing the emissions of greenhouse gases." (DEIR, p. 4.6-18.) This language requires that the EIR analyze the Project's consistency with *all* GHG reduction plans that are applicable to the Project, not just the select plans that the City prefers to analyze.

6-10

The EIR accounted for a building lifespan of 30 years when amortizing the construction emissions, indicating the expected lifespan of the Project. (EIR, p. 5.14-20.) Thus, the Project must show consistency with long-term State GHG goals to comply with CEQA. In particular, the EIR must also demonstrate consistency with Executive Order B-55-18 (**EO B-55-18**).

6-11

EO B-55-18 requires the State of California to achieve carbon neutrality—net zero GHG emissions—by 2045. The Project is inconsistent with EO B-55-18 because it does not prohibit the use of gasoline, diesel, and natural gas, and burning such non-renewable fuels results in substantial GHG emissions, preventing the Project from ever achieving carbon neutrality. The DEIR did not analyze the Project's consistency with EO B-55-18, nor did it provide a mechanism or measures for the Project's emissions to reduce to net zero over the Project's lifetime. For the Project's emissions to be considered less than significant under this second threshold, the Project must be consistent with all such plans, but the City fails to demonstrate that the Project would not conflict with several applicable plans, policies, and regulations.

6-12

GHG mitigation is insufficient under CEQA

Based on the first chosen threshold, and the consideration of cumulative GHG emissions, the City concluded the Project's GHG emissions would be significant and unavoidable. To reduce this significant GHG impact, the DEIR referenced an air quality mitigation measure, MM-AQ-1, and three GHG mitigation measures, MM-GHG-1 through MM-GHG-3. (DEIR, p. 4.6-34.)

MM-GHG-1 proposes to implement the following actions: (1) provide on-site solar energy for electricity generation to meet 75% of the Project's operational energy requirements; (2) Energy Star rated heating, cooling, lighting, and appliances; (3) require outdoor electrical outlets for electric lawn and garden equipment; (4) provide information for energy efficient light and control system; and (5) require zero-emission light and medium-duty delivery vehicles where feasible. (DEIR, p. 4.6-34.) MM-GHG-2 would require a 75% waste diversion program.

6-13

(DEIR, p. 4.6-34.) MM-GHG-3 would implement a water conservation strategy to reduce 20% of the Project's anticipated water usage by installing low-water usage appliances and fixtures, restrict water usage for cleaning, implement water sensitive urban design practices, and install a rainwater collection system. (DEIR, p. 4.6-34.) Lastly, MM-AQ-1 would require: (1) zero emission cargo handling equipment; (2) documentation on funding opportunities such as the Carl Moyer Program; (3) Level 2 or faster electric vehicle charging conduit and infrastructure to meet Title 24 requirements and achieve 25% of parking spaces by 2030; (4) Conduit for trailer parking areas; and (5) four heavy-duty electric truck charging stations by 2030. (DEIR, p. 1-5.)

6-13 Cont.

After accounting for the GHG reductions from the four proposed mitigation measures, the reductions anticipated from mitigation is expected to be about 3,652.83 MTCO2e annually, representing roughly a quarter of the Project's emissions, and leaving the majority of the Project's GHG impact remaining.[4] (DEIR, p. 5.7-13.) Despite the availability of other GHG mitigation and Project alternatives, the DEIR declared that the Project's mitigated emissions were unavoidable. However, because this conclusion is not supported by substantial evidence, the DEIR should have included more mitigation to reduce the Project's GHG emissions to the extent required by CEQA.

The Project's GHG impacts must be fully mitigated

6-14

CEQA requires that the Project include fair-share mitigation for all significant cumulative impacts. (*Napa Citizens for Honest Gov't v. Napa County Board of Supervisors* (2001) 91 Cal.App.4th 342, 364.) Here, this means mitigation of the full extent of the Project's GHG impacts. The DEIR claims the project's consistent with plans after the mitigation measures, making the Project's impact less than significant as to the second threshold, and that no other mitigation measures are feasible, beyond the three GHG mitigation measures and one air quality mitigation measure referenced in the GHG analysis. But that conclusion is incorrect, and not supported by substantial evidence.

6-15

The amount of GHG emissions that comprises the Project's fair share is clear. The Project's mitigated annual emissions were estimated at 10,114.11 MTCO2e, and the reasonable lifespan this Project is approximately 30 years, as indicated by the amortization of construction emissions. (DEIR, p. 4.6-23.) Therefore, the Project would likely contribute to over 300,000 MTCO2e during its entire lifespan.[5] This would be a good starting point from which to subtract the effect of additional non-offset mitigation measures, before implementing offset purchases.

---

[4] 13,766.94 MTCO2e unmitigated − 10,114.11 MTCO2e mitigated = 3,652.83
3,652.83 ÷ 13,766.94 MTCO2e unmitigated = 26.53%

[5] $10{,}114.11 \times 30\ years = 303{,}423.3\ MTCO2e$

Infeasibility Finding Lacks Substantial Evidence

The conclusion that the Project will not be able to achieve any mitigation beyond the four mitigation measures included in the GHG analysis is not supported with substantial evidence. Even though the mitigation measures represent is essentially fourteen separate project features, it is still not sufficient to mitigate the Project's emissions to the extent feasible. Even after mitigation, the majority of the Project's GHG impact would remain. The DEIR should have proposed these features in the mitigation measures to be applied to the maximum-feasible extent in order to justify the conclusion that the Project's GHG impact would be unavoidable due to lack of feasibility of further mitigation. The DEIR failed to analyze or provide substantial evidence to support the conclusion that the entirety of the remaining GHG impact would be unavoidable. Further mitigation would be feasible, and the City's determination that the Project's significant impact would be unavoidable relies on the finding that further mitigation would be infeasible, which is not supported by the DEIR. 6-16

It Is Feasible to alter proposed mitigation measures to further reduce GHG emissions

While these measures are a good start, the City did not demonstrate that these actions would represent the maximum feasible mitigation to support a finding that the Project's impact would be significant and unavoidable. 6-17

For example, the City did not provide any support for why 20% reduction in water usage is the maximum feasible to be achieved through the water conservation strategy. Likewise, the requirement for 75% waste reduction and 75% of operational energy requirements from solar represent arbitrary standards because the DEIR did not provide reasoning for why these amounts would be the maximum feasible implementation to reduce the Project's significant GHG impact. Moreover, even though MM-AQ -1 would provide four electric vehicle charging stations for heavy-duty trucks by 2030, the DEIR provides no basis for why that is the earliest or maximum feasible framework. 6-18

Overall, the lead agency carries the burden of including an adequate discussion of feasible mitigation measures, including identifying the reasons for infeasibility, and the failure to do so here is a violation of CEQA and insufficient to meet the City's burden. 6-19

It Is feasible to adopt further mitigation measures

CEQA requires that the lead agency identifies specific reasons for infeasibility of further mitigation when concluding significant and unavoidable impact. The DEIR claimed that the mobile-source emissions were infeasible, yet did not specify any particular measures which 6-20

would be infeasible or provide substantial evidence for its determination for infeasibility. The DEIR stated as follows:

"Although mobile vehicles are the main source of GHG emissions associated with Project operations, neither the Project Applicant nor the City can substantively or materially affect reductions in the Project's on-road mobile source emissions beyond what is already required by regulation. No feasible mitigation measures beyond those already identified exist that would reduce these emissions to levels that are less than significant. (DEIR, p. 4.6-24.)

6-20 Cont.

While it is true that the City and applicant do not have regulatory authority over individual vehicle emissions, the City and applicant together can commit to design and technology specifications that reduce emissions. Thus, the conclusion that further mitigation is infeasible was not supported by substantial evidence. There are other readily available mitigation measures, even considering that a majority of the impact originates from mobile emissions. There is no requirement that GHG mitigation be achieved through direct reduction of the emissions source itself. For instance, it is feasible for the Applicant to purchase carbon offsets for the project emissions that it cannot reduce directly, even though the source of those carbon offsets may be unrelated to the project site. Moreover, even if the regulations and mitigation measures does represent the maximum reductions from mobile emissions, the City provided no evidence to support the conclusion that the Project's non-mobile emissions would be infeasible to reduce further.

6-21

Operational emissions reductions are feasible

In addition to the recommended modifications to the proposed mitigation measures, there are several other mitigation measures that are feasible, including renewable energy systems and batteries to power the commercial buildings during non-peak hours, solar water heaters, among many other mitigation strategies that can be incorporated in the project as design features or as mitigation measures. Such features could be adopted individually or as part of a comprehensive goal of sustainable building certification, such as Leadership and Energy and Environmental Design (LEED) with the highest certification level of LEED Platinum.

6-22

To reduce mobile emissions, the Project could require fully electrified vehicle fleets for light-, medium-, and heavy-duty vehicles at the earliest feasible time. The City could also require future tenants to enroll in the U.S. Environmental Protection Agency's SmartWay program, which helps reduce the GHG impact of trucking and deliveries.[6]

6-23

Overall, there are more options available to mitigate emissions to the full extent of project emissions, but the measures identified in the DEIR were only able to mitigate a portion of the Project's significant GHG emissions. There are many feasible warehouse-specific mitigation

6-24

[6] Learn About Smart Way, https://www.epa.gov/smartway/learn-about-smartway

measures that are outlined in the California Attorney General's CEQA best practices recommendations for warehouse projects.[7] The City's failure to acknowledge or adopt these additional measures demonstrates that the Project has not met CEQA's fair-share reduction requirement, or its responsibility to adequately consider all feasible mitigation when it finds that there would be a cumulatively significant GHG impact. 6-24 Cont.

It is feasible to purchase carbon offsets for the remainder of the Project's GHG impact, after implementation of all feasible on-site mitigation. The DEIR did not mention offsets as an available mitigation measure when it concluded that further mitigation is not feasible, nor did it provide any explanation of why offsets would be infeasible. 6-25

The City's failure to consider GHG offsets as a mitigation measure directly goes against SCAQMD guidance, which the City relied upon for its 3,000 MTCO2e numeric threshold but arbitrarily chose to ignore in this context. The DEIR acknowledged, in its discussion of the recommended SCAQMD methodology, that Tier 5 of the SCAQMD recommended approach would involve the lead agency to "consider the implementation of CEQA mitigation (including the purchase of GHG offsets) to reduce the project efficiency target to Tier 4 levels." (DEIR, p. 4.6-20.) Yet, the DEIR did not analyze Tier 4 or 5 in its analysis, erroneously stopping at Tier 3. Here, the project would greatly exceed the 4.8 MTCO2e efficiency target, requiring Tier 5 analysis, yet the DEIR did not explore purchasing GHG offsets as a mitigation measure despite the SCAQMD's clear guidance. 6-26

Lastly, offsets are acceptable mitigation measures under CEQA (See CEQA Guidelines § 15126.4 (c)(3).) Because the City has provided no reason why offsets are infeasible, the DEIR's conclusion that it is not feasible to fully mitigate the Project's GHG emissions is not supported by substantial evidence. The City should require the Applicant to purchase offsets to the extent necessary to mitigate the Project's emissions. 6-27

Conclusion

The DEIR fails to require all feasible mitigation, despite concluding that the significant GHG impact will be unavoidable. The Project would not reduce its fair share of GHG emissions. The lead agency has not met its burden of showing that additional mitigation measures beyond the ones identified in the DEIR are infeasible, and the City did not support its conclusions by substantial evidence. 6-28

[7] See State of California Department of Justice, Rob Bonta Attorney General, "Warehouse Projects: Best Practices and Mitigation Measures to Comply with the California Environmental Quality Act," Updated September 2022, pp. 7 – 10, available at: https://oag.ca.gov/system/files/media/warehouse-best-practices.pdf. Last accessed July 23, 2025.

Please put me on the interest list to receive updates about the progress of this Project. We make this request under Public Resources Code, § 21092.2. 6-29

Sincerely,

Dean Wallraff, Attorney at Law
Executive Director, Advocates for the Environment

10211 Sunland Blvd., Shadow Hills, CA 91040 (818) 650-0030 X101 dw@aenv.org

Appendix B
Architectural Elevations



NORTH ELEVATION

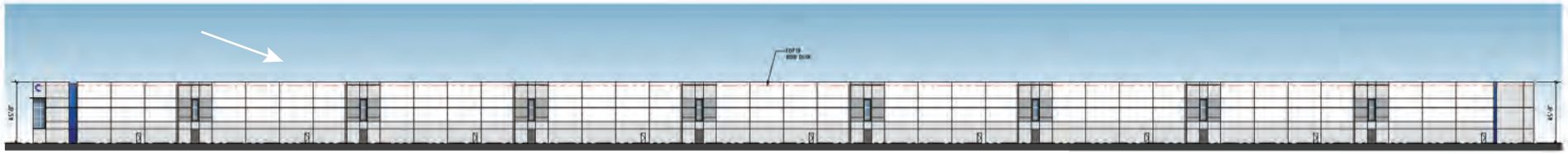

WEST ELEVATION

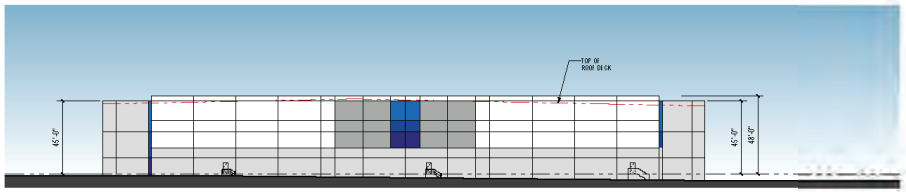

SOUTH ELEVATION

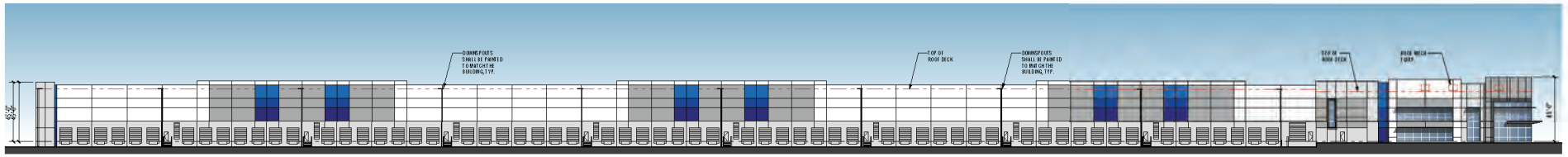

EAST ELEVATION



SOURCE: RGA, 2025

FIGURE 3-15

Architectural Elevations

Phelan 20 Project

DUDEK

Appendix C

Traffic Impact Analysis Technical Memorandum

DUDEK
MAIN OFFICE
605 THIRD STREET
ENCINITAS, CALIFORNIA 92024
T 800.450.1818 F 760.632.0164

MEMORANDUM

To:	Dana Whitmer, Covington Development Partners
From:	Lisa Valdez, Senior Transportation Planner
Subject:	Phelan 20 Industrial Warehouse: Traffic Impact Analysis
Date:	November 21, 2025
cc:	Chelsea Ohanesian, Project Manager
Attachments:	Figures 1 – 11
	A – Caltrans comment letter (July, 29, 2025)
	B – Traffic Count Data
	C – Cumulative Projects and Cumulative Project Trip Generation
	D – Queuing Worksheets
	E – Caltrans Collision Data

Dudek has prepared the following traffic impact analysis in response to comments received from the California Department of Transportation (Caltrans) on July 29, 2025 (Attachment A) for the proposed Phelan Warehouse Project (Project). The Project includes the construction of an industrial warehouse building on an approximately 21.02-acre site generally located west of US Highway 395 (US 395), east of Los Banos Avenue, and south of Phelan Road in the City of Hesperia (City). The transportation analysis has been prepared consistently with the requirements and policies from the City of Hesperia Traffic Impact Analysis Guidelines for Vehicle Miles Traveled (VMT) and Level of Service Assessment (LOS) (City of Hesperia 2020), and the Caltrans Local Development Review (LDR) Safety Review Practitioner's Guidance (Caltrans 2024). In response to Caltrans' comments, this technical memorandum:

- Presents trip generation, distribution, and assignment characteristics for the proposed project;
- Provides an offsite queuing analysis for the Existing (2023), Opening Year (2027) and Horizon Year (2040) buildout conditions with the project-added traffic; and
- Reviews collision data for US 395 intersections and Interstate 15 (I-15) ramps within the project study area.

1 Project Description

The Project location is shown in **Figure 1**, and the conceptual site plan is shown in **Figure 2**. The project includes the construction of a speculative industrial warehouse totaling 419,840 square feet (SF) and associated improvements, including loading docks, truck and vehicle parking, and landscaped areas. Access to the site would be from US Hwy 395 to Phelan Road. The Project would include paved passenger vehicle parking areas located north and west of the industrial/warehouse building, as well as tractor-trailer stalls and loading docks located on the east side of the building. In total, the Project would provide approximately 62 loading dock positions, approximately 57 tractor-trailer stalls, and 199 passenger vehicle parking spaces (including accessible spaces).

Site Access

Access to the Project site would be provided by three driveways (see **Figure 2**):

- **Driveway #1: Phelan Road North Driveway** – 30-foot-wide, right-in right out (passenger cars only) driveway with stop sign
- **Driveway #2: New Caliente Street East Driveway** – 45-foot-wide, full-access (passenger cars and trucks) driveway with stop sign
- **Driveway #3: New Caliente Street Southeast Driveway** – 30-foot-wide, full-access (passenger cars and trucks) driveway with stop sign

For the purposes of this analysis, the Phelan Road North Driveway is referred to as "Driveway 1" or "D1" and the New Caliente Street connection to Phelan Road is noted as "Driveway 2" or "D2" in analysis documentation and figures. Project driveways to New Caliente Street are not analyzed separately.

Tenants for the Project have not been identified and the industrial warehouse building space is considered speculative. However, it is anticipated that the site would be served by typical tractor-semitrailer trucks used for general freight deliveries. A truck turning exhibit is provided as **Figure 3,** showing truck access through the intersection of Phelan Road and US 395. As shown, there is sufficient turning radius and pavement width for large semitrailer trucks to maneuver through the intersection.

Proposed Site Access Improvements

The Project would include improvements along Phelan Road, including frontage landscaping and pedestrian improvements. All roadway improvements required as part of the Project, whether located on or off site, would be designed and constructed in accordance with all applicable local, state, and federal roadway standards and practices. As the Project continues through design review, detailed roadway improvements will continue to be developed in coordination with the City.

2 Project Trip Generation

The project trip generation rates, vehicle splits, and the resulting trip generation estimates for the project are summarized in Table 1. Trip generation estimates for the proposed project are based on daily and AM and PM peak hour trip generation rates obtained from the Institute of Transportation Engineers (ITE) Trip Generation Handbook, 11th Edition (ITE 2021). Additionally, Passenger car equivalent (PCE) factors were applied to the trip generation estimates to account for truck traffic. Based on the San Bernardino County Congestion Management Program (CMP) a 1.5 PCE factor was applied to 2-axle trucks, a 2.0 PCE was applied to 3-axle trucks, and a 3.0 PCE factor was applied to 4-axle trucks.

The layout of the building is most representative of a high-cube warehousing land use. However, as a specific end-user is not in place for the proposed project, a 35% General Light Industrial and 65% High-Cube Warehousing split of the total building square footage is applied to provide a conservative analysis. The General Light Industrial trip rate is approximately 5 times higher in the AM peak hour and 4 times higher in the PM peak hour than the High-Cube Fulfillment Center Warehouse trip rate. Thus, incorporation of the industrial trip rate split, in the event that a small portion of the building is converted to a more industrial-specific land use, increases the total trip generation estimate compared to a warehousing-only estimate, the expected sole land use of the facility. As such, the following vehicle-mix and land use assumptions provide a conservative analysis:

- General Light Industrial (ITE Code 110) trip rates were used to obtain trip generation estimates for 35% of the project, totaling approximately 146,944 SF. As the ITE Trip Generation Handbook does not provide information regarding the type of vehicle generated for light industrial uses, vehicle mixes data and percentages from the Fontana Truck Trip Generation Study (City of Fontana 2003) for Light Industrial land use are used.
- High-Cube Fulfillment Center Warehouse (ITE Code 155) trip rates were used to obtain trip generation estimates for 65% of the project, totaling approximately 272,896 SF. As the ITE Trip Generation Handbook does not provide a breakdown of truck traffic by axle classification, vehicle mix data and percentages are also applied to the project trip generation estimates from the Southern California Air Quality Management District (SCAQMD) Warehouse Truck Trip Study Data Results and Usage (SCAQMD 2014).

As shown in Table 1, the project would generate 745 daily trips, 151 AM peak hour trips, and 140 PM peak hour trips. This is equivalent to 1,115 daily PCEs, 205 AM peak hour PCEs, and 195 PM peak hour PCEs.

2.1 Trip Distribution and Assignment

Project trip distribution percentages are based on logical travel paths to and from the Project site and consideration of designated truck routes. Phelan Road west of US 395 is a designated truck route. However, Phelan Road/Main Street east of US 395 is no longer designated as a City truck route; therefore, all Project truck traffic traveling to and from I-15 will be routed on US 395 to the Joshua Street interchange.

The total Project trip distribution percentages at the study intersections are shown in Figure 4 (for both passenger vehicle and truck trips). Figure 5 presents the Project trip assignments from the Project site.

Table 1. Project Trip Generation

Land Use	ITE Code	Size/Units	Daily	AM Peak Hour			PM Peak Hour		
				In	Out	Total	In	Out	Total
Trip Rates[1]									
General Light Industrial	110	TSF	1.71	0.65	0.09	0.74	0.09	0.56	0.65
High-Cube Fulfillment Center Warehouse	155	TSF	1.81	0.12	0.03	0.15	0.06	0.10	0.16
Trip Generation									
35% Building - General Light Industrial	110	146.944 TSF	251	96	13	109	13	82	96
65% Building - High-Cube FC Warehouse	155	272.896 TSF	494	33	8	41	17	27	44
Phelan 60 Industrial Project Total		**419.840**	**745**	**129**	**21**	**150**	**30**	**109**	**140**
Trip Generation Summary (Non-PCE, by Vehicle Classification)									
General Light Industrial - 35% of Building									
Vehicle Mix	**%[2]**								
Passenger Vehicles	78.6%		197	75	10	86	11	65	75
2-Axle Trucks	8.0%		20	8	2	9	1	7	8
3-Axle Trucks	3.9%		10	4	1	5	1	4	4
4+-Axle Trucks	9.5%		24	9	1	10	1	8	9
General Light Industrial Total (Non-PCE)			**251**	**96**	**14**	**110**	**13**	**83**	**96**
High-Cube Fulfillment Center Warehouse - 65% of Building									
Vehicle Mix	**%[3]**								
Passenger Vehicles	55.3%		273	18	4	23	9	15	24
2-Axle Trucks	15.5%		77	5	1	6	3	4	7
3-Axle Trucks	4.9%		24	2	0	2	1	1	2
4+-Axle Trucks	24.3%		120	8	2	10	4	6	11
High-Cube Fulfillment Center Total (Non-PCE)			**494**	**33**	**8**	**41**	**17**	**27**	**44**
Building Total			**745**	**129**	**22**	**151**	**30**	**110**	**140**
Total by Vehicle Classification									
Passenger Vehicles			470	94	15	108	20	79	100

Table 1. Project Trip Generation

Land Use	ITE Code	Size/Units	Daily	AM Peak Hour			PM Peak Hour		
				In	Out	Total	In	Out	Total
Trucks			274	36	7	42	10	30	40
Total Trip Generation (Non-PCE)			**745**	**129**	**22**	**151**	**30**	**110**	**140**
Trip Generation Summary (PCE, by Vehicle Classification)									
Vehicle Mix	**PCE[4]**								
Passenger Vehicles	1.0		470	94	15	108	20	79	100
2-Axle Trucks	1.5		145	20	5	24	6	16	22
3-Axle Trucks	2.0		68	11	2	12	3	11	14
4+-Axle Trucks	3.0		432	51	9	61	16	43	59
Building Total (PCE)			**1,115**	**175**	**31**	**205**	**45**	**149**	**194**
Total by Vehicle Classification									
Passenger Vehicles			470	94	15	108	20	79	100
Trucks			644	82	16	97	24	69	95
Total Trip Generation (PCE)			**1,115**	**175**	**31**	**205**	**44**	**149**	**195**

Notes: Rounding discrepancies may occur. TSF = Thousand Square Feet; PCE = Passenger Car Equivalent

1 Trip rates from the Institute of Transportation Engineers (ITE), *Trip Generation, 11th Edition, 2021.*

2 Vehicle Mix and Percent from the Fontana Truck Trip Generation Study, August, 2004.

3 Vehicle Mix and Percent from the SCAQMD Warehouse Truck Trip Study Data Results and Usage, July 17, 2014.

4 Passenger Car Equivalent (PCE) factors from the San Bernardino County CMP, Appendix B - Guidelines for CMP Traffic Impact Analysis Reports in San Bernardino County, 2016

3 Off-site Queuing Analysis

An off-site queuing analysis was performed for the Existing (2023), Opening Year (2027) and Horizon Year (2040) conditions with the project added traffic. The analysis was conducted using Synchro/SimTraffic, version 12 software. The study locations, traffic volumes, and queuing results are presented in the following section.

3.1 Study Intersections

Based on the project trip distribution presented in Section 2.1, the following study intersections are included in the queuing analysis:

1. US 395/Phelan Road - Main Street
2. US 395/Poplar Street
3. US 395/Three Flags Avenue
4. US 395/Joshua Street
5. I-15 Southbound (SB) Ramps/Joshua Street
6. I-15 Northbound (NB) Ramps /Joshua Street

3.2 Traffic Volumes

Daily, AM and PM peak hour turning movement counts were obtained from February 2022 counts collected for the Hesperia Industrial Center Traffic Analysis (Urban Crossroads 2022) at the study intersections. The raw traffic data is provided as Attachment B. Traffic counts were adjusted to the year 2023 (existing baseline year used in this analysis) using an annual growth rate of 2% per City guidelines and adjusted to PCE to reflect truck traffic according to the standards in the San Bernardino County CMP. The Existing peak hour intersection volumes are presented in **Figure 6**, and the Existing plus Project peak hour intersection volumes are presented in **Figure 7**.

The 2027 Opening Year condition represents a short-term horizon period where the proposed Project is constructed and fully occupied. The peak hour traffic forecasts for the Year 2027 have been projected by increasing the traffic volumes by an annual growth rate of 2%, and adding traffic volumes generated by pending projects. These approved or pending projects are developments in the review process, but not fully approved; or, projects that have been approved, but not fully constructed or occupied. A list of cumulative projects was provided by the City on January 10, 2024 (at the time the project's environmental document was under review by the City) and is provided as Attachment C. Project trip generation estimates for the cumulative projects were derived using ITE Trip Generation, 11th edition (2021) trip rates and are also provided in Attachment C. The cumulative projects are forecast to generate approximately 44,298 daily trips, 3,943 AM peak hour trips, and 4,014 PM peak hour trips. The trips generated by the cumulative projects were distributed through the study area network. The Opening Year (2027) peak hour intersection volumes are presented in **Figure 8**, and Opening Year (2027) plus Project peak hour intersection volumes are presented in **Figure 9**.

The Horizon Year (2040) condition includes analysis of traffic operations under General Plan Year (2040) conditions with project-related traffic added to the AM and PM peak hour traffic volumes. The 2040 volumes were obtained from the Poplar 18 Transportation Impact Analysis (Dudek 2022), which were based on the San Bernardino

Transportation Analysis Model (SBTAM). The Horizon Year (2040) peak hour intersection volumes are presented in **Figure 10**, and Horizon Year (2040) plus Project peak hour intersection volumes are presented in **Figure 11**.

3.3 Queuing Results

The queuing analysis is presented in Tables 3 through 5 and the findings are summarized below. The queuing worksheets are provided as Attachment D. The queuing results are based on the 95th percentile AM and PM peak hour traffic flows.

Existing Plus Project Conditions

As shown in Table 3, the following intersection turning movements are forecast to experience 95th percentile queues beyond storage lane capacities under the Existing plus Project traffic conditions. The queuing conditions identified below also occur during one or both peak hours under Existing without project traffic conditions.

- #1 (US 395/Phelan Road - Main Street) – NB left; SB left- AM and PM peak hour
- #4 (US 395/Joshua Street) – WB left- AM and PM peak hour
- #5 (I-15 SB Ramps/Joshua Street) – SB left- AM and PM peak hour

Opening Year (2027) Plus Project Conditions

As shown in Table 4, the following intersection turning movements are anticipated to experience 95th percentile queues beyond storage lane capacities under the Opening Year (2027) plus Project traffic conditions. The queuing conditions identified below also occur during one or both peak hours under Opening Year without project traffic conditions.

- #1 (US 395/Phelan Road - Main Street) – EB left- PM peak hour; WB left; NB left; SB left- AM and PM peak hour
- #2 (US 395/Poplar Street) – WB left; WB right- AM and PM peak hour
- #3 (US 395/Three Flags Avenue) – NB left- AM and PM peak hour
- #4 (US 395/Joshua Street) – EB left- PM peak hour; WB left, WB right; NB left- AM and PM peak hour; NB right- PM peak hour; SB left- AM and PM peak hour
- #5 (I-15 SB Ramps/Joshua Street) – SB left- AM and PM peak hour

Horizon Year (2040) Plus Project Conditions

As shown in Table 5, the following intersection turning movements are anticipated to experience 95th percentile queues beyond storage lane capacities under the Horizon Year (2040) plus Project traffic conditions. The queuing conditions identified below are the same under Horizon Year without project traffic conditions.

- #1 (US 395/Phelan Road - Main Street) – EB; WB left; NB left; SB left- AM and PM peak hour
- #2 (US 395/Poplar Street) – WB left; WB right- AM and PM peak hour
- #3 (US 395/Three Flags Avenue) – WB left; AM Peak hour; NB left - AM and PM peak hour
- #4 (US 395/Joshua Street) – EB left- PM peak hour; WB left, WB right; NB left; NB right; SB left- AM and PM peak hour
- #5 (I-15 SB Ramps/Joshua Street) – SB left- AM and PM peak hour

Table 3. Existing Plus Project Peak-Hour Queuing Summary

No.	Intersection	Movement	Available Stacking Distance (Feet)	Existing (2023)				Existing plus Project			
				95th Percentile Queue (Feet)		Acceptable?[1]		95th Percentile Queue (Feet)		Acceptable?[1]	
				AM Peak	PM Peak	AM	PM	AM Peak	PM Peak	AM	PM
1	US 395 & Phelan Rd./Main St.	EBL	340	95	85	Yes	Yes	84	126	Yes	Yes
		WBL	245	30	100	Yes	Yes	36	82	Yes	Yes
		NBL[2]	280	272	372	Yes	No	360	384	No	No
		SBL[2]	240	328	317	No	No	320	319	No	No
2	US 395 & Poplar St.	WBL	540	17	48	Yes	Yes	6	43	Yes	Yes
		WBR	540	32	52	Yes	Yes	11	49	Yes	Yes
		SBL	375	41	44	Yes	Yes	42	42	Yes	Yes
3	US 395 & Three Flags Rd.	EBL[3]	170	43	62	Yes	Yes	45	71	Yes	Yes
		WBL	245	143	105	Yes	Yes	152	124	Yes	Yes
		NBL[2]	190	56	78	Yes	Yes	54	119	Yes	Yes
		SBL	225	44	57	Yes	Yes	48	61	Yes	Yes
		SBT[1]	225	106	90	Yes	Yes	99	107	Yes	Yes
		SBR	225	29	32	Yes	Yes	31	28	Yes	Yes
4	US 395 & Joshua St.	EBL	190	43	73	Yes	Yes	43	85	Yes	Yes
		WBL[3]	75	77	93	No	No	80	95	No	No
		WBR[3]	75	46	59	Yes	Yes	60	70	Yes	Yes
		NBL	190	20	32	Yes	Yes	38	47	Yes	Yes
		NBR	330	1	13	Yes	Yes	4	26	Yes	Yes
		SBL	220	99	107	Yes	Yes	100	142	Yes	Yes
		SBR	270	4	7	Yes	Yes	5	5	Yes	Yes
5	I-15 SB Ramps & Joshua St.	SBL	25	27	32	No	No	28	34	No	No
		SBR	1,500	38	49	Yes	Yes	47	48	Yes	Yes

Table 3. Existing Plus Project Peak-Hour Queuing Summary

No.	Intersection	Movement	Available Stacking Distance (Feet)	Existing (2023)				Existing plus Project			
				95th Percentile Queue (Feet)		Acceptable?[1]		95th Percentile Queue (Feet)		Acceptable?[1]	
				AM Peak	PM Peak	AM	PM	AM Peak	PM Peak	AM	PM
6	I-15 NB Ramps & Joshua St.	EBLT[4]	1,000	25	44	Yes	Yes	27	43	Yes	Yes

Source: Attachment D
Notes: NBL = northbound left; NBR = northbound right; NBTR = northbound thru-right; SBL = southbound left; SBR = southbound right; WBL = westbound left; WBT = westbound thru; WBR = westbound right; EBL = eastbound left; **Bold** – Exceeds stacking distance

1. Stacking Distance is acceptable if the required stacking distance is less than or equal to the stacking distance provided.
2. 95th percentile volume exceeds capacity, queue may be longer.
3. Queue extends past available pocket length for movement, but does not extend into freeway mainline lanes.
4. Available stacking distance measured from the I-15 SB Off-Ramp/Joshua Street intersection.

Table 4. Opening Year Plus Project Peak-Hour Queuing Summary

No.	Intersection	Movement	Available Stacking Distance (Feet)	Opening Year				Opening Year plus Project			
				95th Percentile Queue (Feet)		Acceptable?[1]		95th Percentile Queue (Feet)		Acceptable?[1]	
				AM Peak	PM Peak	AM	PM	AM Peak	PM Peak	AM	PM
1	US 395 & Phelan Rd./Main St.	EBL	340	183	370	Yes	No	238	443	Yes	No
		WBL	245	274	338	No	No	271	310	No	No
		NBL[2]	280	376	392	No	No	333	370	No	No
		SBL[2]	240	319	265	No	No	321	265	No	No
2	US 395 & Poplar St.	WBL	540	753	625	No	No	754	625	No	No
		WBR	540	782	735	No	No	789	714	No	No
		SBL	375	251	67	Yes	Yes	289	108	Yes	Yes
3	US 395 & Three Flags Rd.	EBL[3]	170	44	80	Yes	Yes	45	71	Yes	Yes

Table 4. Opening Year Plus Project Peak-Hour Queuing Summary

No.	Intersection	Movement	Available Stacking Distance (Feet)	Opening Year				Opening Year plus Project			
				95th Percentile Queue (Feet)		Acceptable?[1]		95th Percentile Queue (Feet)		Acceptable?[1]	
				AM Peak	PM Peak	AM	PM	AM Peak	PM Peak	AM	PM
		WBL	245	203	153	Yes	Yes	181	161	Yes	Yes
		NBL[2]	190	178	258	Yes	**No**	196	262	**No**	**No**
		SBL	225	34	42	Yes	Yes	34	40	Yes	Yes
		SBT[1]	225	115	117	Yes	Yes	143	121	Yes	Yes
		SBR	225	24	20	Yes	Yes	23	19	Yes	Yes
4	US 395 & Joshua St.	EBL	190	140	226	Yes	**No**	122	223	Yes	**No**
		WBL[3]	75	112	119	**No**	**No**	97	155	**No**	**No**
		WBR[3]	75	169	118	**No**	**No**	258	101	**No**	**No**
		NBL	190	167	237	Yes	**No**	197	206	**No**	**No**
		NBR	330	165	499	Yes	**No**	257	472	Yes	**No**
		SBL	220	211	272	Yes	**No**	228	286	**No**	**No**
		SBR	270	45	23	Yes	Yes	39	15	Yes	Yes
5	I-15 SB Ramps & Joshua St.	SBL	25	32	37	**No**	**No**	36	38	**No**	**No**
		SBR	1,500	75	60	Yes	Yes	95	61	Yes	Yes
6	I-15 NB Ramps & Joshua St.	EBLT[4]	1,000	60	102	Yes	Yes	64	103	Yes	Yes

Source: Attachment D
Notes: NBL = northbound left; NBR = northbound right; NBTR = northbound thru-right; SBL = southbound left; SBR = southbound right; WBL = westbound left; WBT = westbound thru; WBR = westbound right; EBL = eastbound left; **Bold** – Exceeds stacking distance

1. Stacking Distance is acceptable if the required stacking distance is less than or equal to the stacking distance provided.
2. 95th percentile volume exceeds capacity, queue may be longer.
3. Queue extends past available pocket length for movement, but does not extend into freeway mainline lanes.
4. Available stacking distance measured from the I-15 SB Off-Ramp/Joshua Street intersection.

Table 5. Horizon Year Plus Project Peak-Hour Queuing Summary

No.	Intersection	Movement	Available Stacking Distance (Feet)	Horizon Year (2040)				Horizon Year (2040) plus Project			
				95th Percentile Queue (Feet)		Acceptable?[1]		95th Percentile Queue (Feet)		Acceptable?[1]	
				AM Peak	PM Peak	AM	PM	AM Peak	PM Peak	AM	PM
1	US 395 & Phelan Rd./Main St.	EBL	340	183	370	Yes	No	238	443	Yes	No
		WBL	245	274	338	No	No	271	310	No	No
		NBL[2]	280	376	392	No	No	333	370	No	No
		SBL[2]	240	319	265	No	No	321	265	No	No
2	US 395 & Poplar St.	WBL	540	753	625	No	No	754	625	No	No
		WBR	540	782	735	No	No	789	714	No	No
		SBL	375	251	67	Yes	Yes	289	108	Yes	Yes
3	US 395 & Three Flags Rd.	EBL[3]	170	44	80	Yes	Yes	45	71	Yes	Yes
		WBL	245	203	153	Yes	Yes	181	161	Yes	Yes
		NBL[2]	190	178	258	Yes	No	196	262	No	No
		SBL	225	34	42	Yes	Yes	34	40	Yes	Yes
		SBT[1]	225	115	117	Yes	Yes	143	121	Yes	Yes
		SBR	225	24	20	Yes	Yes	23	19	Yes	Yes
4	US 395 & Joshua St.	EBL	190	140	226	Yes	No	122	223	Yes	No
		WBL[3]	75	112	119	No	No	97	155	No	No
		WBR[3]	75	169	118	No	No	258	101	No	No
		NBL	190	167	237	Yes	No	197	206	No	No
		NBR	330	165	499	Yes	No	257	472	Yes	No
		SBL	220	211	272	Yes	No	228	286	No	No
		SBR	270	45	23	Yes	Yes	39	15	Yes	Yes
5	I-15 SB Ramps & Joshua St.	SBL	25	32	37	No	No	36	38	No	No
		SBR	1,500	75	60	Yes	Yes	95	61	Yes	Yes

Table 5. Horizon Year Plus Project Peak-Hour Queuing Summary

No.	Intersection	Movement	Available Stacking Distance (Feet)	Horizon Year (2040)				Horizon Year (2040) plus Project			
				95th Percentile Queue (Feet)		Acceptable?[1]		95th Percentile Queue (Feet)		Acceptable?[1]	
				AM Peak	PM Peak	AM	PM	AM Peak	PM Peak	AM	PM
6	I-15 NB Ramps & Joshua St.	EBLT[4]	1,000	60	102	Yes	Yes	64	103	Yes	Yes

Source: Attachment D
Notes: NBL = northbound left; NBR = northbound right; NBTR = northbound thru-right; SBL = southbound left; SBR = southbound right; WBL = westbound left; WBT = westbound thru; WBR = westbound right; EBL = eastbound left; **Bold** – Exceeds stacking distance

1. Stacking Distance is acceptable if the required stacking distance is less than or equal to the stacking distance provided.
2. 95th percentile volume exceeds capacity, queue may be longer.
3. Queue extends past available pocket length for movement, but does not extend into freeway mainline lanes.
4. Available stacking distance measured from the I-15 SB Off-Ramp/Joshua Street intersection.

4 Safety Analysis

US 395

Dudek obtained collision data from Caltrans along US 395, from approximately just south of Joshua Street (Post Mile [PM] R3.981) to approximately just north of Phelan Road (PM 7.113). The collision data is provided in Attachment F. The data includes crash rates per million vehicle miles for the most recent 60-month period from January 1, 2020 to December 31, 2024 from the Traffic Accident Surveillance and Analysis System (TASAS). The actual crash rates for this segment of US 395 were compared to the average rates for similar facilities throughout the State. The total crash rates include all reported crashes: Fatal, Injury, and Property Damage. Based on the data provided, this segment of US 395 has a total rate of crashes that is above the average for similar facilities statewide.

In addition, crash data was provided for the following intersections:

- US 395/Joshua Street (PM R4.517)
- US 395/Three Flags Court (PM R4.710)
- US 395/Poplar Street (PM R4.854)
- US 395/Phelan Road - Main Street (PM 5.613)

With the exception of the US 395/ Three Flags Court intersection, all of the intersections have total rates of crashes that are above the average for similar facilities statewide.

The project adds traffic to this segment of US 395, including through the intersections above, which have above average safety rates, and would therefore add project traffic to the existing safety conditions. However, as also shown in the queuing analysis, this is an existing condition that will continue to degrade as development in the region continues. As such, SBCTA is implementing the US 395 Freight Mobility and Safety Project (SBCTA 2025), a major regional highway improvement project, proposed along seven miles of US 395, between I-15 and State Route (SR-18). The project is proposed to improve capacity and safety conditions and includes widening US 395 from two lanes to four lanes, constructing a raised median, and adding eight-foot shoulders. Signal modifications will also occur at eight intersections, including the US 395 and Phelan Road intersection. The project is funded through a combination of Measure I, Surface Transportation Block Grant Program, Trade Corridor Enhancement Program, State Highway Operations and Protection Program, and a Federal Earmark. SBCTA awarded the construction contract in November 2025, and the project is currently in the design phase.

With components of the funded US 395 safety improvement project in place, the existing and future safety conditions (e.g., crash rates) on US 395 would improve.

Regional and Local Funding

Measure I is San Bernardino County's half-cent sales tax dedicated to transportation projects including, but not limited to, infrastructure improvements, commuter rail, public transit, and other identified improvements. Measure I was first approved by voters in 1989 and extended in 2004 through the year 2040. Measure I requires that a regional traffic impact fee be created to ensure development is paying its fair share. A regional Nexus study was prepared by SBCTA and concluded that each jurisdiction should include a regional fee component in their local programs to

meet the Measure I requirement. The regional component assigns specific facilities and cost sharing formulas to each jurisdiction and was most recently updated in March 2021. Revenues collected through these programs are used in tandem with Measure I funds to deliver projects identified in the Nexus Study. The City's local Development Impact Fee (DIF) program includes a Regional Circulation System Fee to comply with Measure I and a Local Circulation System Fee to address transportation improvements which are locally noteworthy. The Project applicant will be subject to the City's DIF fee program and will pay the requisite City DIF fees at the rates then in effect.

I-15

In addition, crash data was provided for the I-15 ramps to US 395, Joshua Street, and Main Street (PM 31.256 to PM 34.226), including for the following locations:

- I-15 NB Off-ramp to US 395 (PM 31.256)
- I-15 SB On-ramp from US 395 (PM 31.692)
- I-15 NB On-ramp from Joshua St (PM 32.522)
- I-15 SB Off-ramp to Joshua Street (PM 32.544)
- I-15 SB On-ramp from Eastbound Main Street (PM 33.754)
- I-15 NB Off-ramp to Main Street (PM 33.916)
- I-15 SB On-ramp to Eastbound Main Street (PM 33.978)
- I-15 SB On-ramp to Westbound Main Street (PM 34.01)
- I-15 SB Off-ramp to Main Street (PM 34.143)
- I-15 NB On-ramp to Westbound Main Street (PM 34.226)

The data shows that three of the locations have total rates of crashes that are above the average for similar facilities statewide. This includes the I-15 NB Off-ramp to US 395, I-15 NB Off-ramp to Main Street, and I-15 SB On-ramp to eastbound Main Street. As previously noted, the project would add additional traffic to the I-15 NB Off-ramp at US 395. However, capacity and safety improvements would be constructed along this segment as part of the funded US 395 Freight Mobility and Safety Project.

The project would also add a minimal amount of traffic (passenger cars only) to the I-15 off-ramps at Main Street. The project is estimated to add 11 AM peak hour trips and 3 PM peak hour trips to the northbound off-ramp and 11 AM peak hour trips and 2 PM peak hour trips to the southbound off-ramp. No truck traffic would be added as Main Street is no longer a designated truck route. The trips were calculated based on the assumption that 34% of the project-generated traffic (passenger vehicles only) would travel to/from Main Street towards I-15 (see **Figure 4**), and would be equally distributed between northbound and southbound I-15, and Main Street, east of I-15.

Based on the recent Amargosa and Palmetto High-Cube Warehouse Revised Traffic Impact Analysis (Ganddini 2025), the I-15 ramps at Main Street are currently and are forecast to operate at LOS A during the AM peak hour and LOS B during the PM peak hour through the 2040 General Plan Buildout conditions. Therefore, based on the minimal project-added trips and level of service at the ramps, the project is not anticipated to contribute to a safety issue at either of the I-15 ramps.

5 Summary

The key findings of the transportation analysis in this memo are summarized below:

- The proposed project would generate 745 daily trips, 151 AM peak hour trips, and 140 PM peak hour trips. This is equivalent to 1,115 daily PCEs, 205 AM peak hour PCEs, and 195 PM peak hour PCEs.
- Phelan Road/Main Street east of US 395 is no longer designated as a City truck route; therefore, all Project truck traffic traveling to and from I-15 will be routed on US 395 to the Joshua Street interchange.
- An-off-site queuing analysis was conducted for the Existing (2023), Opening Year (2027) and Horizon Year (2040) conditions at six intersections along US 395 and I-15 where project generated traffic would occur. Based on the queuing analysis, most of the study intersections are anticipated to experience queuing issues with and without the project-added traffic during one or both peak hours under all scenarios.
- Collision data and crash rates along US 395, from approximately south of Joshua Street to approximately just north of Phelan Road were also reviewed and compared to average rates for similar facilities throughout the State.
- The project adds traffic to this segment of US 395, including through intersections which have above average safety rates, and would therefore add to the existing safety conditions along US 395. However, as also shown in the queuing analysis, this is an existing safety condition that will continue to degrade as development in the region continues. As such, SBCTA is implementing the US 395 Freight Mobility and Safety Project, a major regional highway improvement project, proposed along US 395, between I-15 and SR-18. The project is proposed to improve capacity and safety conditions, and the construction contract was awarded by SBCTA in November 2025. With components of the funded US 395 safety improvement project in place, crash rates on US 395 would improve .
- The project would also add a minimal amount of traffic (passenger cars only) to the I-15 off-ramps at Main Street. However, based on the minimal project-added trips and acceptable level of service at the ramps, the project is not anticipated to contribute to a safety issue at either of the I-15 ramps.

6 References

City of Fontana. 2003. Truck Trip Generation Study.

City of Hesperia. 2020. City of Hesperia Traffic Impact Analysis Guidelines for Vehicle Miles Traveled (VMT) and Level of Service Assessment (LOS). July.

California Department of Transportation (Caltrans). 2024. Caltrans Local Development Review (LDR) Safety Review Practitioner's Guidance. February

Dudek. 2022. Poplar 18 Transportation Impact Analysis.

Ganddini. 2025. Amargosa and Palmetto High-Cube Warehouse Revised Traffic Impact Analysis. August 21. https://www.hesperiaca.gov/1466/Environmental-Review-Documents

ITE (Institute of Transportation Engineers). 2021. *Trip Generation Manual*. 11th ed.

San Bernardino County Transportation Authority (SBCTA). 2016. Congestion Management Program (CMP).

SBCTA. 2025. https://www.gosbcta.com/sbcta-advances-us-395-phase-2-widening-project-with-construction-contract-award/. November 12.

Southern California Air Quality Management District (SCAQMD). 2014. *SCAQMD High Cube Warehouse Truck Trip Study White Paper Summary of Business Survey Results*. June 2014.

Transportation Research Board. 2016. *Highway Capacity Manual, Sixth Edition: A Guide for Multimodal Mobility Analysis*.

Urban Crossroads. 2022. Hesperia Industrial Center Traffic Analysis. April 25

Figures

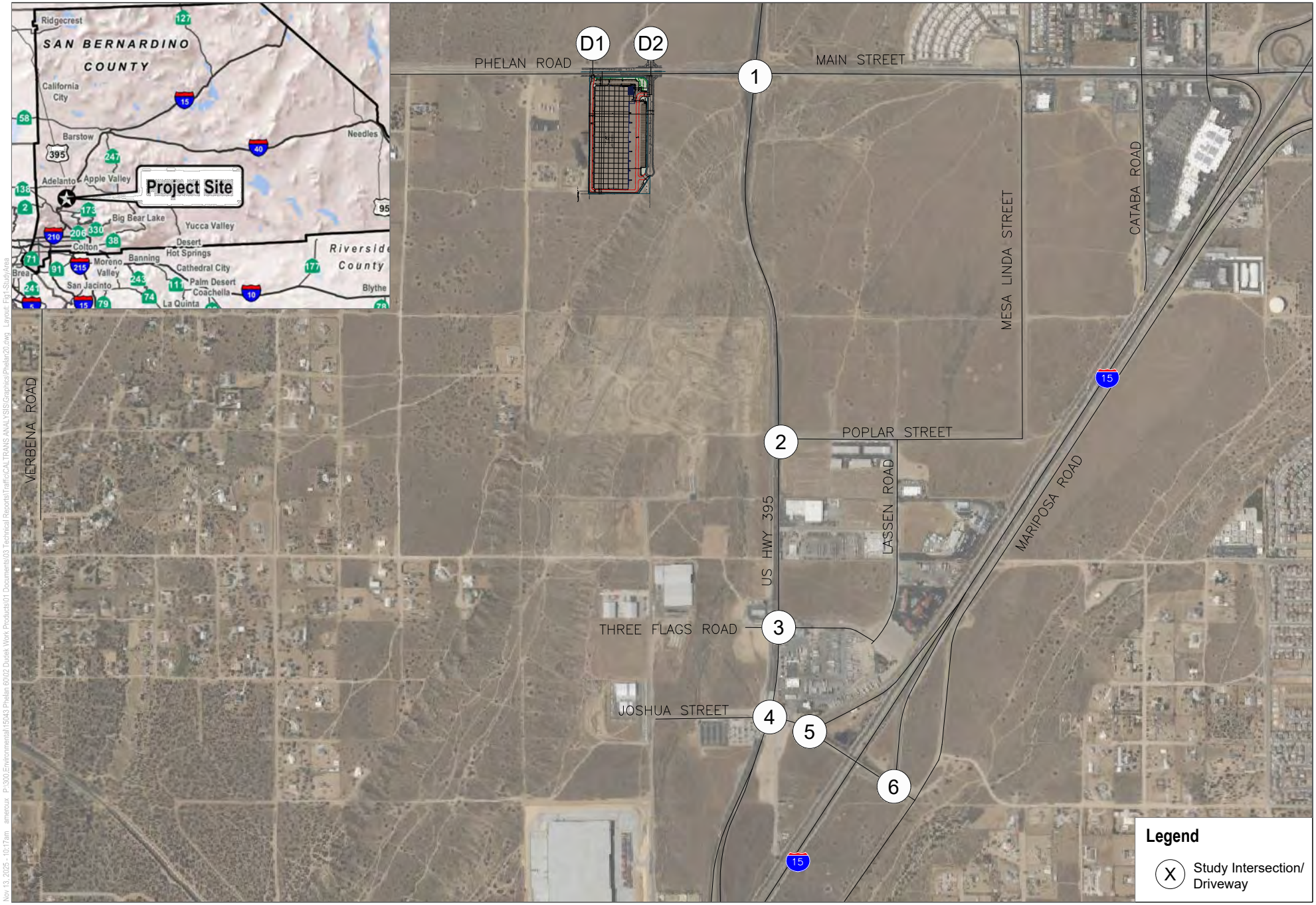

SOURCE: Bing Maps 2025; RGA 2023

DUDEK

NOT TO SCALE

FIGURE 1

Project Location and Study Area

Phelan 20 Industrial Project

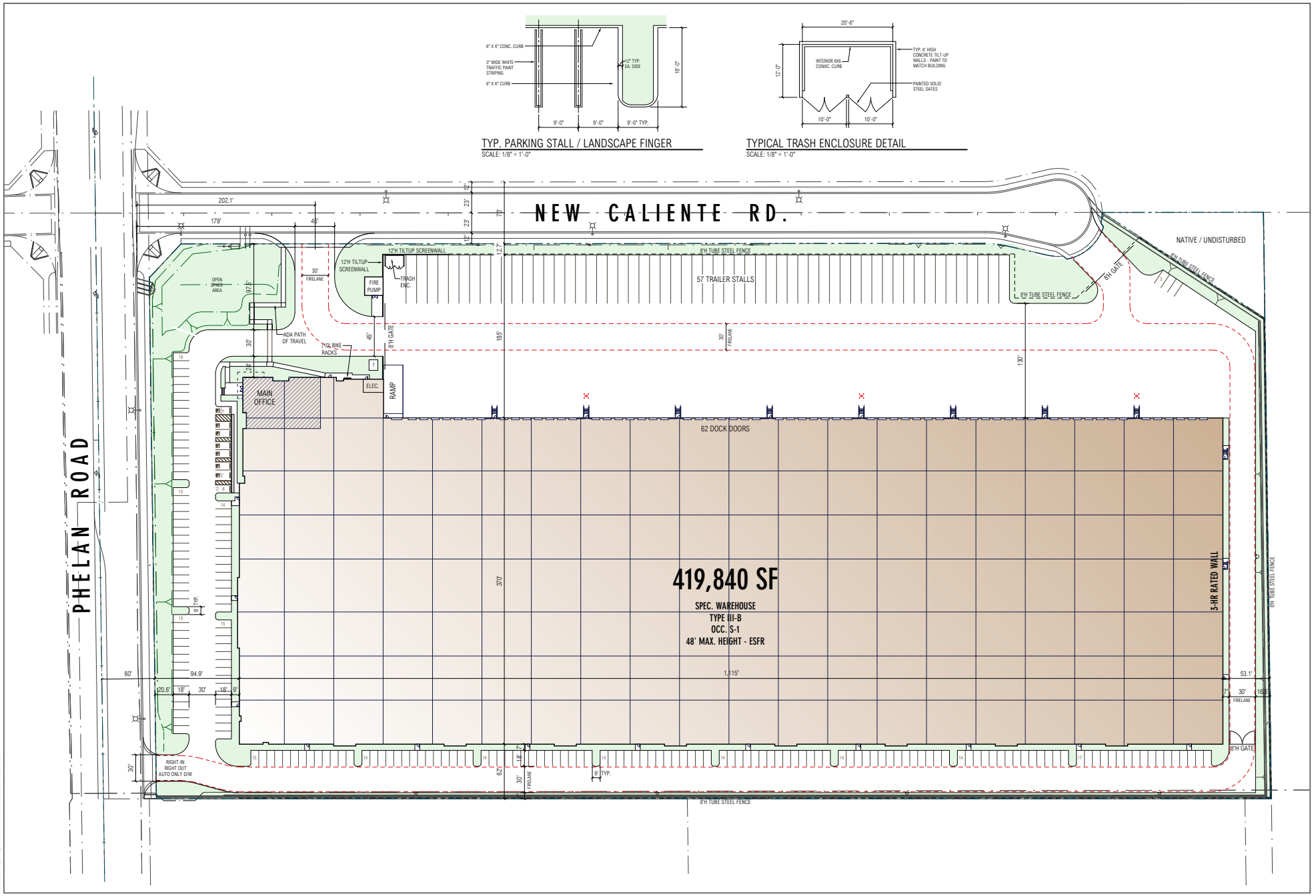

SOURCE: RGA, 2023

FIGURE 2

Site Plan and Vehicle Circulation Access

Phelan 20 Project

DUDEK

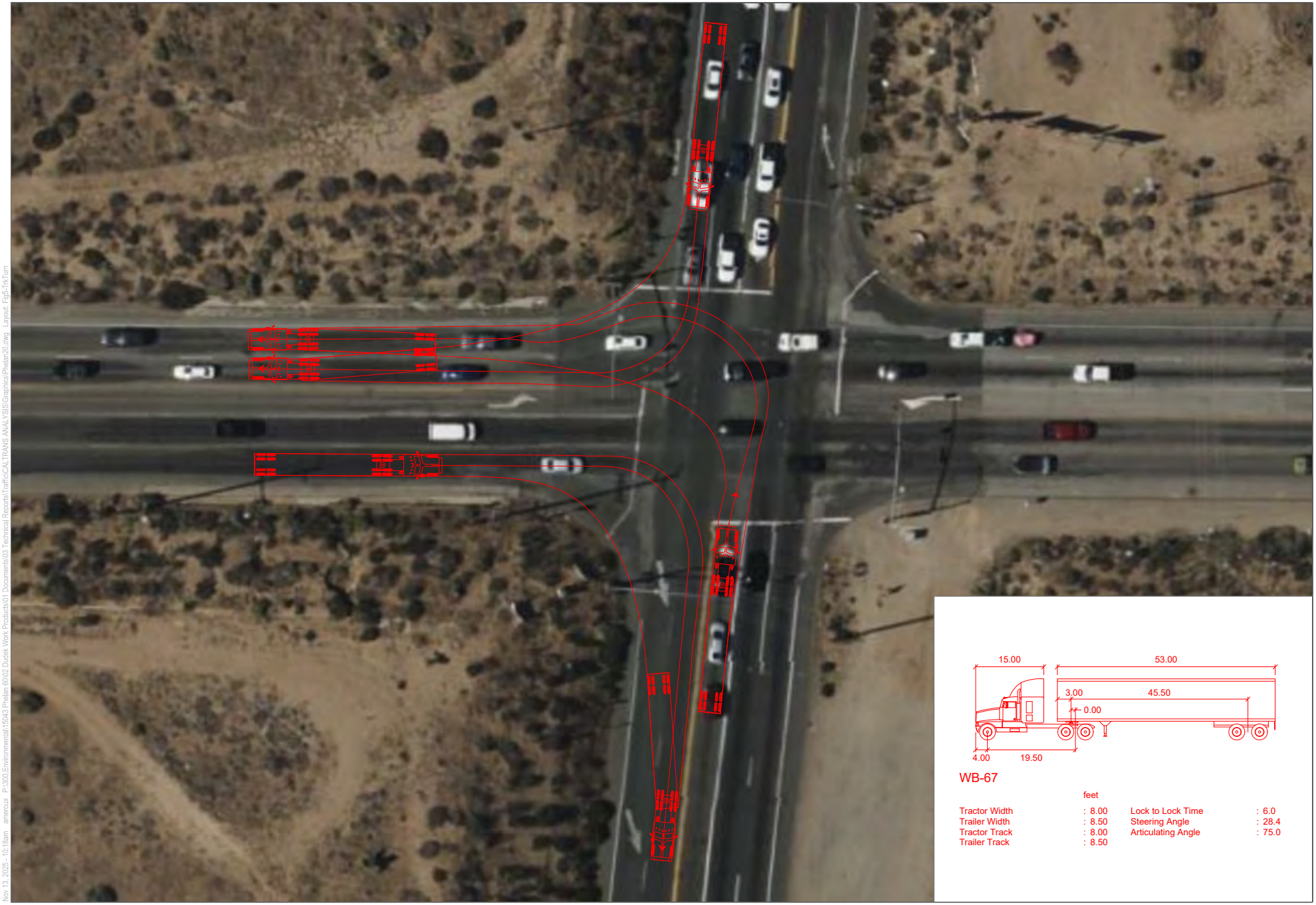

SOURCE: Bing Maps 2025; RGA 2023; AASHTO 2018

DUDEK

NOT TO SCALE

FIGURE 3

Truck Turning Template

Phelan 20 Industrial Project

Nov 13, 2025 - 10:18am amercux P:\300_Environmental\15043 Phelan 60\02 Dudek Work Products\01 Documents\03 Technical Reports\Traffic\CALTRANS ANALYSIS\Graphics\Phelan20.dwg Layout: Fig5-TrkTurn

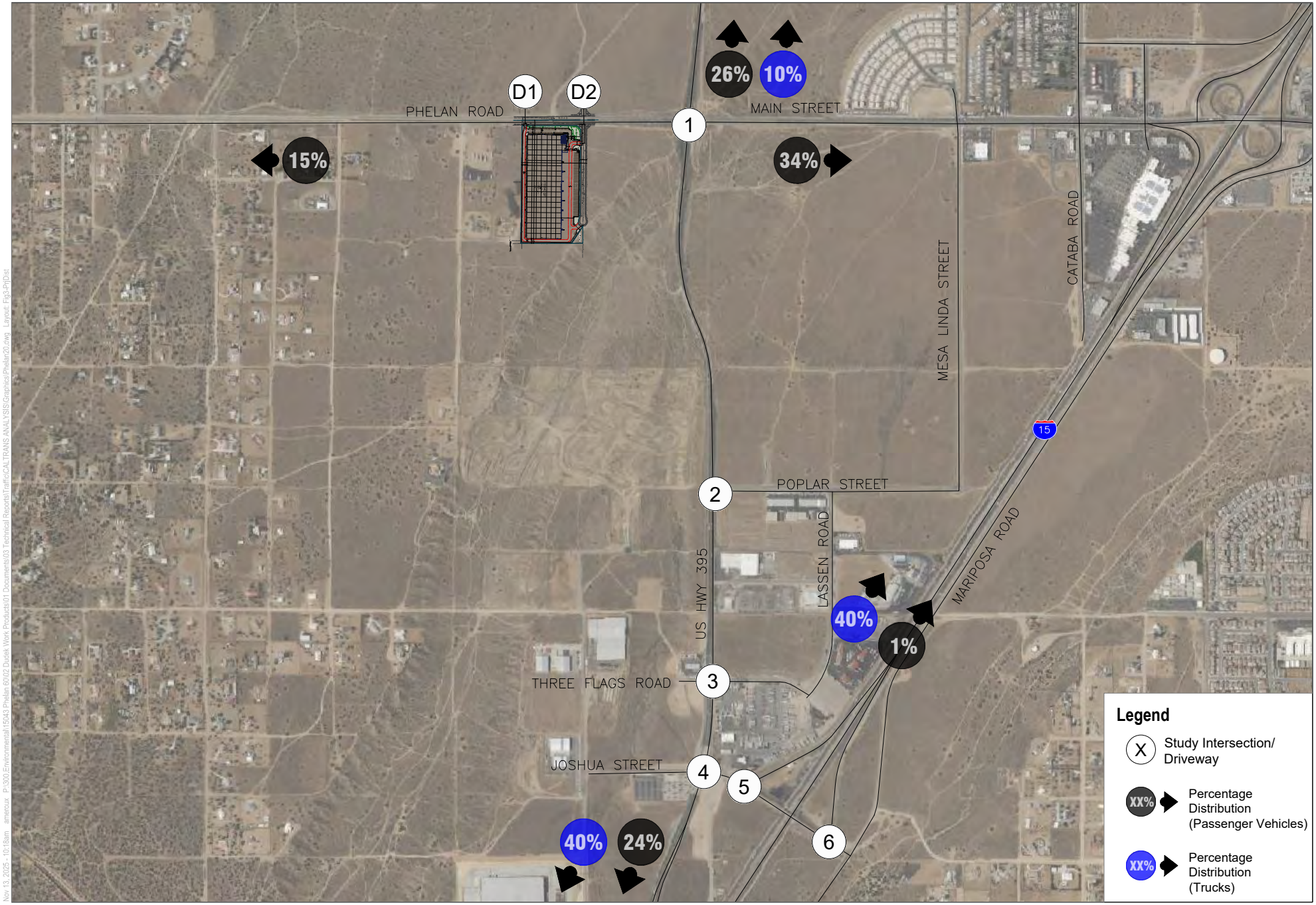

SOURCE: Bing Maps 2025; RGA 2023

NOT TO SCALE

FIGURE 4

Project Trip Distribution

Phelan 20 Industrial Project

DUDEK

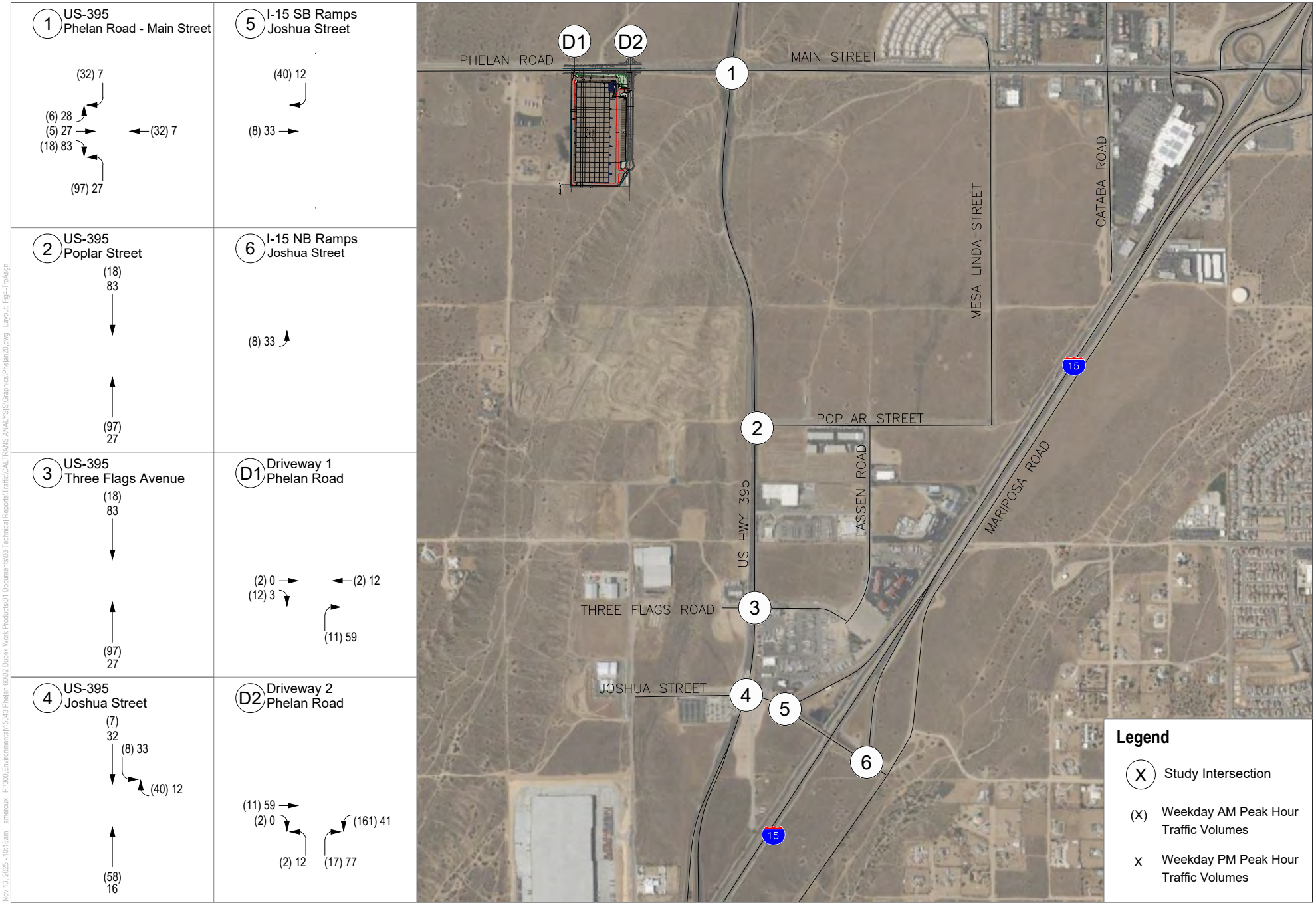

SOURCE: Bing Maps 2025; RGA 2023

DUDEK

NOT TO SCALE

FIGURE 5

Project Trip Assignment (PCE)

Phelan 20 Industrial Project

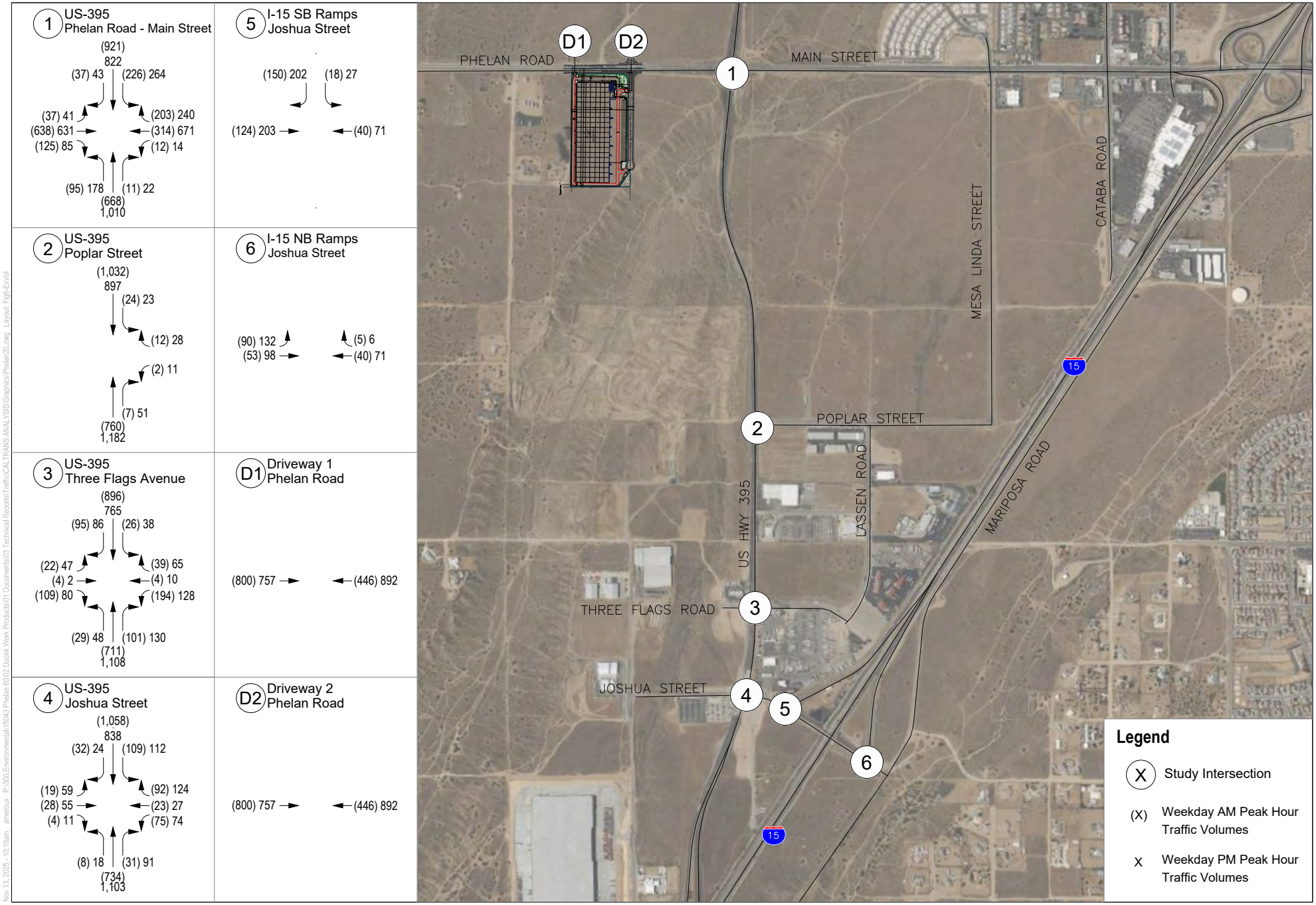

SOURCE: Bing Maps 2025; RGA 2023

NOT TO SCALE

FIGURE 6

Existing Peak Hour Traffic Volumes (PCE)

Phelan 20 Industrial Project

DUDEK

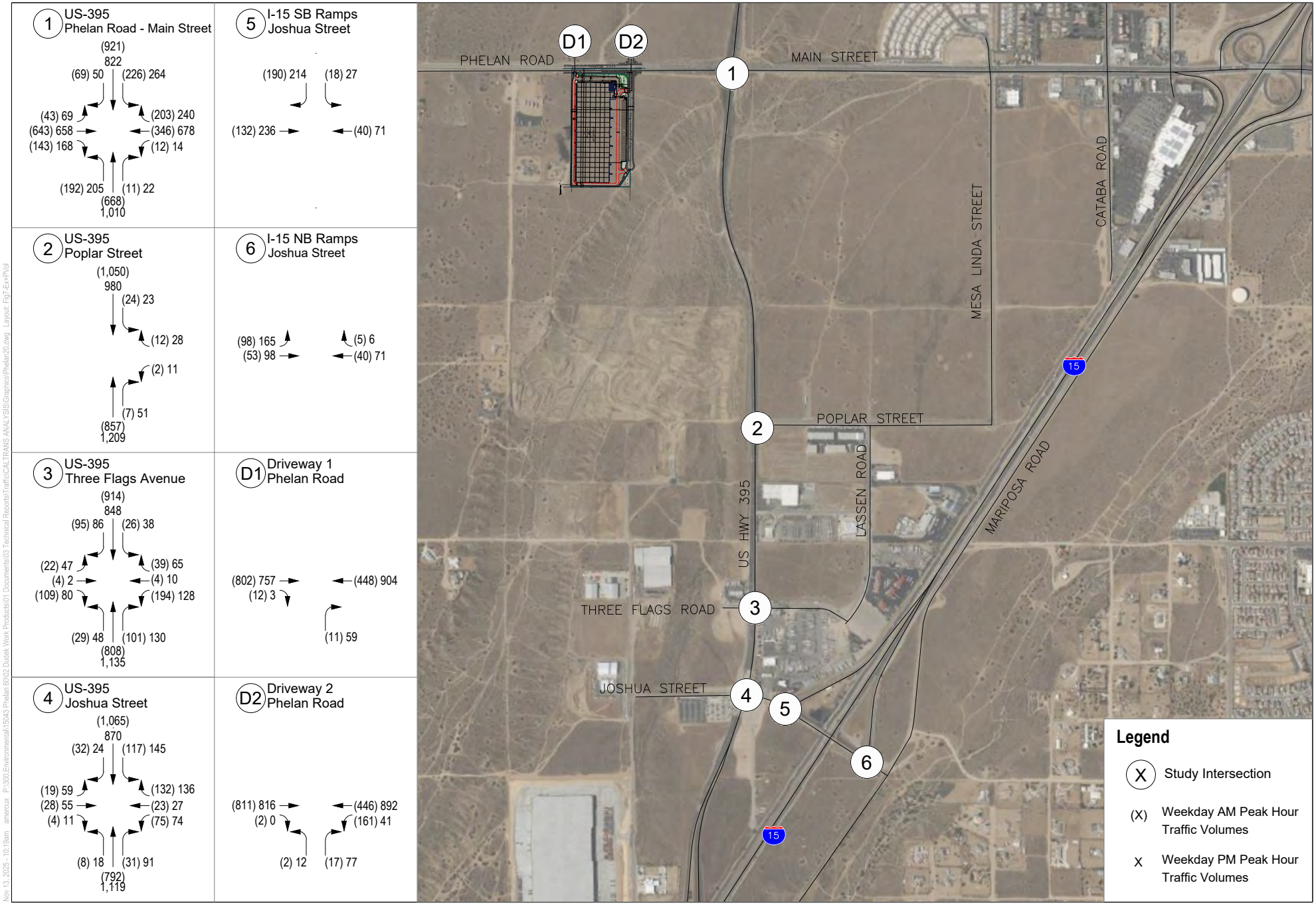

SOURCE: Bing Maps 2025; RGA 2023

DUDEK

NOT TO SCALE

FIGURE 7

Existing Plus Project Peak Hour Traffic Volumes (PCE)

Phelan 20 Industrial Project

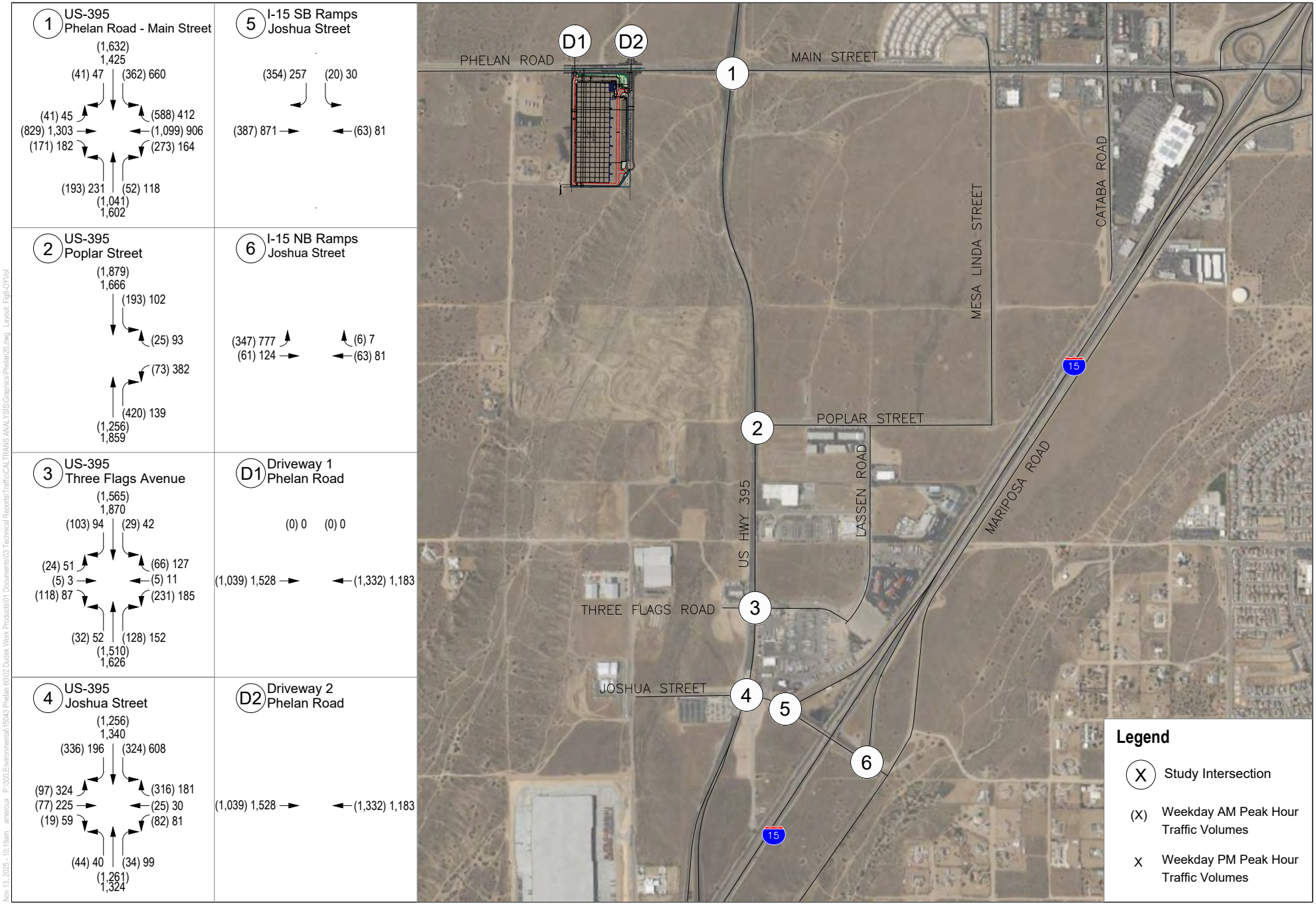

SOURCE: Bing Maps 2025; RGA 2023

NOT TO SCALE

FIGURE 8

Opening Year (2027) Peak Hour Traffic Volumes (PCE)

Phelan 20 Industrial Project

DUDEK

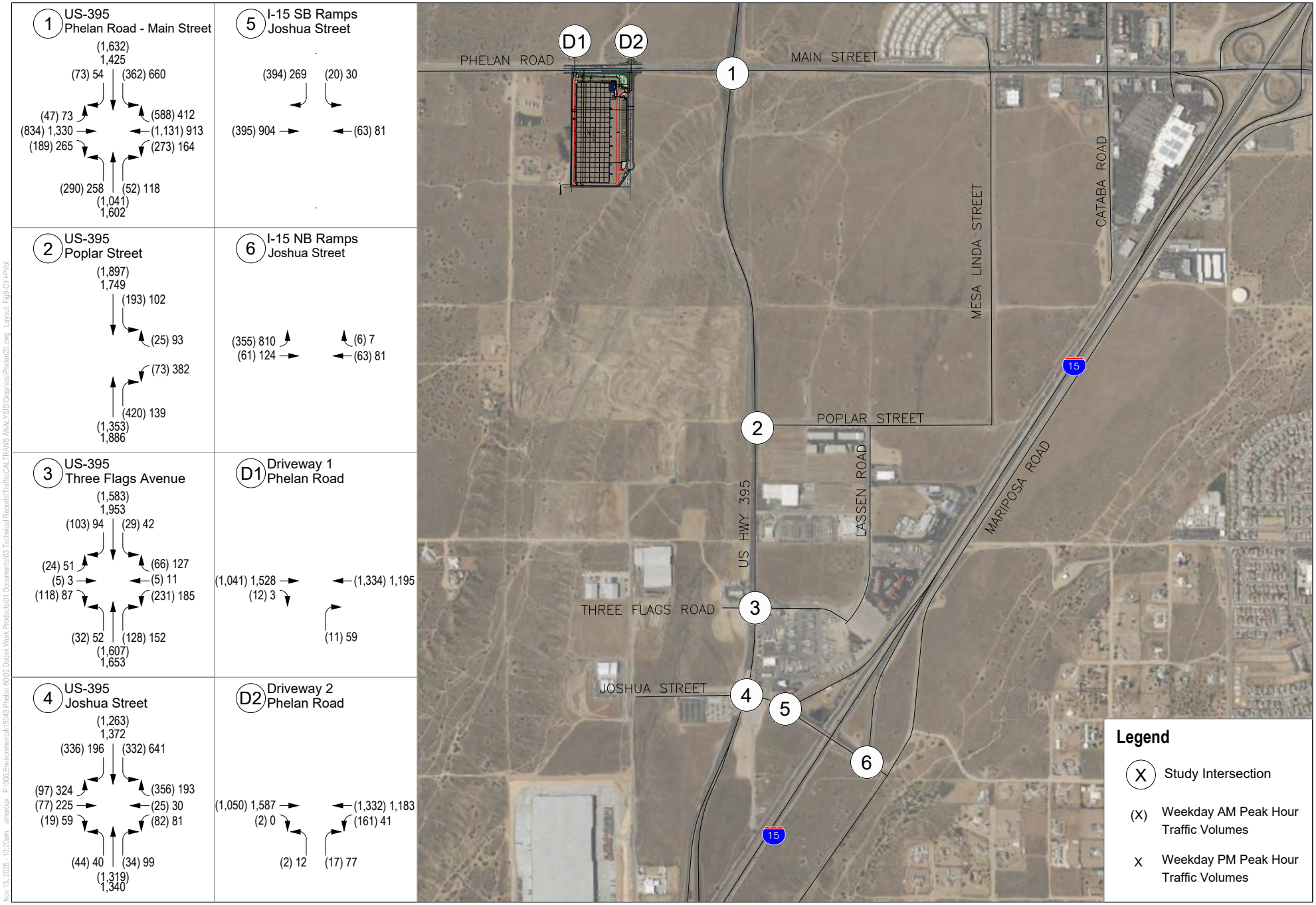

SOURCE: Bing Maps 2025; RGA 2023

DUDEK

NOT TO SCALE

FIGURE 9

Opening Year (2027) Plus Project Peak Hour Traffic Volumes (PCE)

Phelan 20 Industrial Project

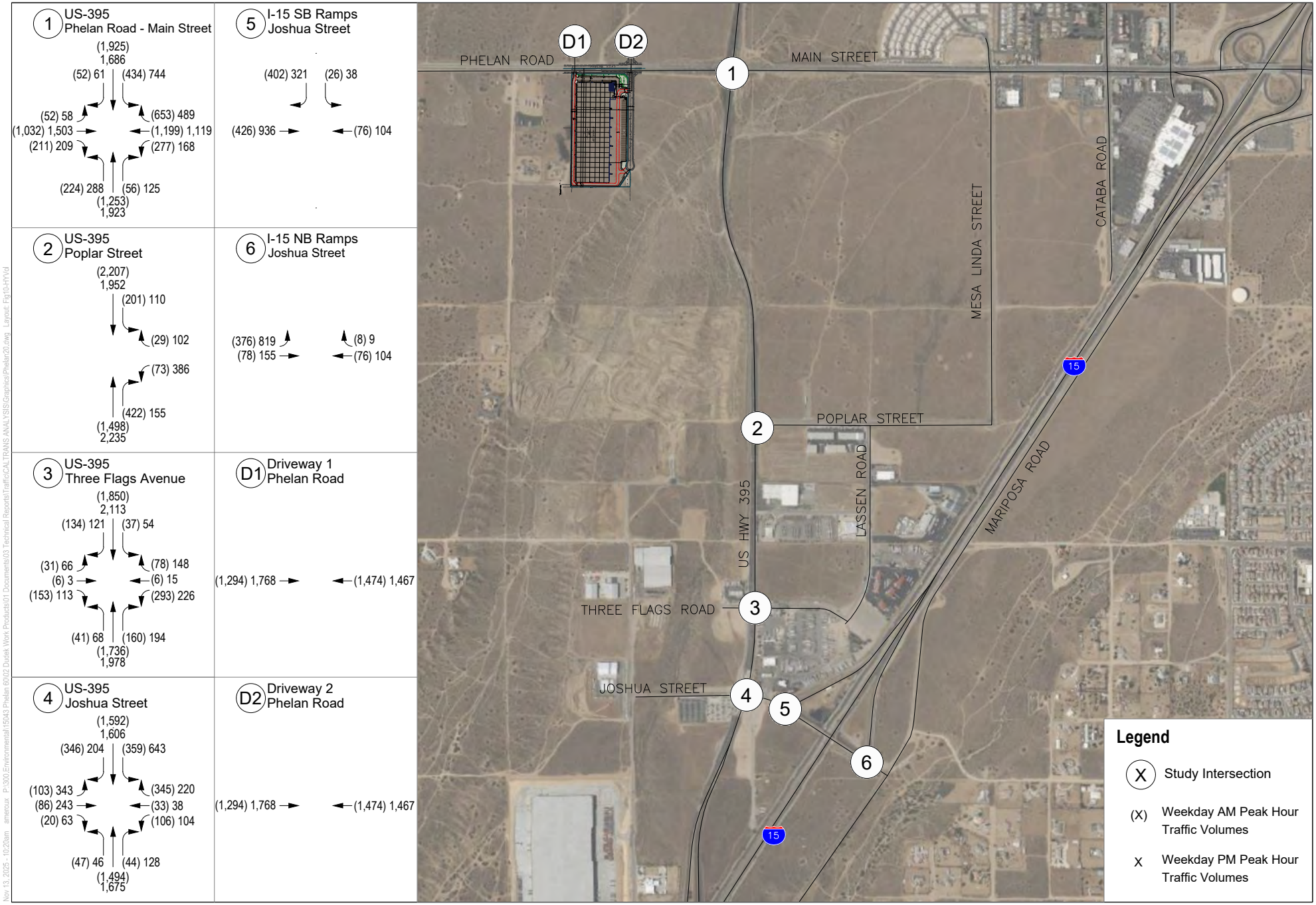

SOURCE: Bing Maps 2025; RGA 2023

NOT TO SCALE

FIGURE 10

Horizon Year (2040) Peak Hour Traffic Volumes (PCE)

Phelan 20 Industrial Project

DUDEK

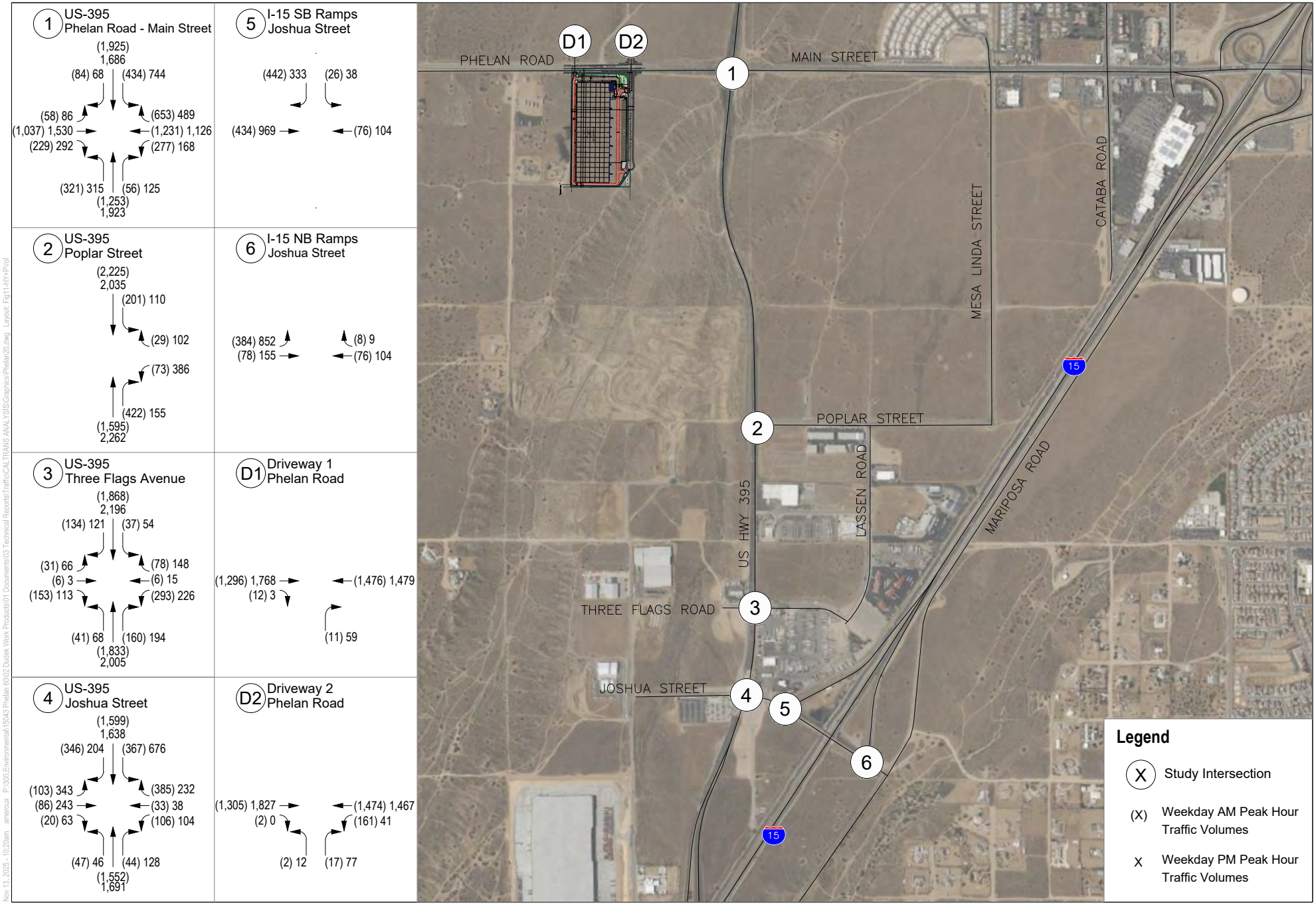

SOURCE: Bing Maps 2025; RGA 2023

DUDEK

NOT TO SCALE

FIGURE 11

Horizon Year (2040) Plus Project Peak Hour Traffic Volumes (PCE)

Phelan 20 Industrial Project

Attachment A

Caltrans Comment Letter

CALIFORNIA STATE TRANSPORTATION AGENCY GAVIN NEWSOM, GOVERNOR

California Department of Transportation

DISTRICT 8
464 WEST 4TH STREET
SAN BERNARDINO CA, 92401
(909) 963-8604
www.dot.ca.gov

July 29, 2025

Route & Postmile #: SR-395/R5.479
Cross Street: Phelan Rd & Los Banos Ave.
GTS ID: 36753

City of Hesperia
Planning Division
Attn: Leilani Henry
9700 Seventh Avenue,
Hesperia, CA, 92345

Subject: Comments for the Initial Study Mitigated Negative Declaration (IS/MND)—Phelan 20 Project

The California Department of Transportation (Caltrans), District 8, Local Development Review (LDR) branch, has completed its review of the Initial Study/Mitigated Negative Declaration (IS/MND) and related documents for the proposed Phelan 20 Project.

The proposed project involves the construction of a 419,840-square-foot industrial warehouse with 5,000 square feet of space on a 19.2-acre site located along Phelan Road in unincorporated San Bernardino County. The project includes associated improvements such as loading docks, truck and passenger vehicle parking, stormwater basins, and landscaping, with a maximum building height of 50 feet and a net floor area ratio of 53.1%. Off-site improvements include frontage landscaping, pedestrian facilities, and the extension of New Caliente Road south from Phelan Road. The project is expected to generate truck and employee trips that may impact nearby intersections and the State Highway System, warranting a Transportation Impact Analysis. Construction is anticipated to occur over 12 to 18 months following approval of the Conditional Use Permit.

4-1

Based on the information provided in the environmental documents made available for public review, we are submitting the following comments and recommendations for your consideration.

General:

1. Please include responses to the comments in this memorandum for your next review submittal.
2. Add a PE stamp on Appendix I—Transportation Technical Memo.

Safety Reviews:

3. The proposed project will generate additional trips on the State Highway System, provide a Safety Analysis Report for the intersection of Phelan Rd and US 395. The Safety Analysis

4-2

Report shall follow the attached guidance. See the attached guidance: Local Development Review (LDR) Safety Review Practitioner's Guidance. Please follow the steps below:

a. To request crash data on the State Highway System, please submit your request via our California Public Records Act (CPRA) portal at mycusthelp.com.
b. Please analyze the existing crash data and discuss project's impact on safety as needed.
c. Provide appropriate countermeasures to mitigate/reduce project's impact as needed.

4-2 cont.

Traffic Analysis Report:

4. Please provide a Traffic Impact Analysis report with the items below: 4-3
   a. Provide a figure to show the proposed project's trip distribution. 4-4
   b. Include discussion on the type of trucks this facility will service and provide truck turning templates for the intersection of Phelan Rd/US-395. 4-5
   c. Perform a queuing analysis for the intersection of Phelan Rd/US-395 and any additional locations that will generate additional trips on the State Highway System. 4-6
      i. Please provide traffic data to support the queuing analysis. 4-7
      ii. Please provide queuing analysis for the existing conditions, opening year, and horizon year. 4-8
   d. Please include the traffic impacts from nearby pending projects that may affect your development. Consult with the leading agency for the status and information on these projects. 4-9
5. *Appendix I Transportation Memo, Section 2.1 (Roadway Network), p. 4 states that* "The posted speed mile is 65 miles per hour (MOH)"—Please Verify this speed limit. 4-10
6. *Appendix I Transportation Tech Memo, Section 2.1 (Roadway Network), p. 4 mentions that* "The City of Hesperia classifies Phelan Road as a major arterial roadway, and a truck route west of US Hwy 395"—In the provided figure below, Phelan Rd is a proposed truck route. Please clarify whether Phelan Rd is already a truck route or will be a truck route. 4-11

Equitable Access

If any Caltrans facilities are impacted by the project, they must comply with the American Disabilities Act (ADA) Standards upon project completion. Additionally, the project must ensure the maintenance of bicycle and pedestrian access throughout the construction phase. These access considerations align with Caltrans' equity mission to provide a safe, sustainable, and equitable transportation network for all users. 4-12

Caltrans Encroachment Permit

Please be advised that any permanent work or temporary traffic control that encroaches onto Caltrans' Right-of-Way (R/W) requires a Caltrans-issued encroachment permit.

For information regarding the Encroachment Permit application and submittal requirements, contact: 4-13

Caltrans Office of Encroachment Permits
464 West 4th Street, Basement, MS 619
San Bernardino, CA 92401-1400
(909) 383-4526
D8.E-permits@dot.ca.gov
https://dot.ca.gov/programs/traffic-operations/ep

Important Note: All permit applications must now be submitted through our CEPS Online Portal at: https://ceps.dot.ca.gov/

4-13 cont.

Currently, no further review from the Local Development Review (LDR) Branch is required. Please be advised that LDR's point of contact role will conclude upon the completion of the development entitlement process. Once the project is entitled, the Encroachment Permit Office will serve as the primary point of contact moving forward.

4-14

Thank you again for including Caltrans in the review process. Should you have any questions regarding this letter, or for future notifications and requests for review of new projects, please email LDR-D8@dot.ca.gov or call 909-963-8604.

Sincerely,



4-15

Janki Patel
Branch Chief - Local Development Review
Division of Transportation Planning
Caltrans District 8

Attachment B

Traffic Count Data

APPENDIX 3.1: TRAFFIC COUNTS – FEBRUARY 2022

This Page Intentionally Left Blank

AM Volume Development

1: Driveway 1 & Poplar St.

PHF: 0.920 7:00 AM Count Date:

	NBL	NBT	NBR	SBL	SBT	SBR	EBL	EBT	EBR	WBL	WBT	WBR	TOTAL
Existing 2022:	0	0	0	0	0	0	0	0	0	0	0	0	0
2022 Adj. PCE:	**0**	**0**	**0**	**0**	**0**	**0**	**0**	**0**	**0**	**0**	**0**	**0**	**0**

2: Driveway 2 & Poplar St.

PHF: 0.920 7:00 AM Count Date:

	NBL	NBT	NBR	SBL	SBT	SBR	EBL	EBT	EBR	WBL	WBT	WBR	TOTAL
Existing 2022:	0	0	0	0	0	0	0	0	0	0	0	0	0
2022 Adj. PCE:	**0**	**0**	**0**	**0**	**0**	**0**	**0**	**0**	**0**	**0**	**0**	**0**	**0**

3: US Highway 395 & Main St./Phelan Rd.

PHF: 0.964 7:15 AM Count Date: 2/16/2022

	NBL	NBT	NBR	SBL	SBT	SBR	EBL	EBT	EBR	WBL	WBT	WBR	TOTAL
Existing 2022:	79	507	8	199	736	32	35	612	119	8	299	174	2,808
2022 Adj. PCE:	**93**	**654**	**10**	**221**	**902**	**36**	**36**	**625**	**122**	**11**	**307**	**199**	**3,213**

4: US Highway 395 & Poplar St.

PHF: 0.934 7:00 AM Count Date: 2/16/2022

	NBL	NBT	NBR	SBL	SBT	SBR	EBL	EBT	EBR	WBL	WBT	WBR	TOTAL
Existing 2022:	0	589	6	20	843	0	0	0	0	1	0	5	1,464
2022 Adj. PCE:	**0**	**745**	**6**	**23**	**1,011**	**0**	**0**	**0**	**0**	**2**	**0**	**12**	**1,799**

5: US Highway 395 & Three Flags Rd.

PHF: 0.927 7:00 AM Count Date: 2/16/2022

	NBL	NBT	NBR	SBL	SBT	SBR	EBL	EBT	EBR	WBL	WBT	WBR	TOTAL
Existing 2022:	26	537	42	11	733	92	21	1	101	72	2	13	1,651
2022 Adj. PCE:	**28**	**697**	**101**	**25**	**878**	**93**	**21**	**3**	**106**	**190**	**3**	**38**	**2,181**

6: US Highway 395 & Joshua St.

PHF: 0.854 7:00 AM Count Date: 2/16/2022

	NBL	NBT	NBR	SBL	SBT	SBR	EBL	EBT	EBR	WBL	WBT	WBR	TOTAL
Existing 2022:	6	529	27	68	809	29	17	18	3	53	21	59	1,639
2022 Adj. PCE:	**7**	**719**	**30**	**106**	**1,037**	**31**	**18**	**27**	**3**	**73**	**22**	**90**	**2,160**

7: I-15 SB Ramps & Joshua St.

PHF: 0.922 7:45 AM Count Date: 2/16/2022

	NBL	NBT	NBR	SBL	SBT	SBR	EBL	EBT	EBR	WBL	WBT	WBR	TOTAL
Existing 2022:	0	0	0	17	0	89	0	82	0	0	37	0	225
2022 Adj. PCE:	**0**	**0**	**0**	**17**	**0**	**147**	**0**	**121**	**0**	**0**	**39**	**0**	**324**

8: I-15 NB Ramps & Joshua St.

PHF: 0.953 7:30 AM Count Date: 2/16/2022

	NBL	NBT	NBR	SBL	SBT	SBR	EBL	EBT	EBR	WBL	WBT	WBR	TOTAL
Existing 2022:	0	0	0	0	0	0	50	49	0	0	37	4	140
2022 Adj. PCE:	**0**	**0**	**0**	**0**	**0**	**0**	**88**	**51**	**0**	**0**	**39**	**4**	**181**

PM Volume Development

1: Driveway 1 & Poplar St.

PHF: 0.920 4:45 PM Count Date:

	NBL	NBT	NBR	SBL	SBT	SBR	EBL	EBT	EBR	WBL	WBT	WBR	TOTAL
Existing 2022:	0	0	0	0	0	0	0	0	0	0	0	0	0
2022 Adj. PCE:	**0**	**0**	**0**	**0**	**0**	**0**	**0**	**0**	**0**	**0**	**0**	**0**	**0**

2: Driveway 2 & Poplar St.

PHF: 0.920 4:45 PM Count Date:

	NBL	NBT	NBR	SBL	SBT	SBR	EBL	EBT	EBR	WBL	WBT	WBR	TOTAL
Existing 2022:	0	0	0	0	0	0	0	0	0	0	0	0	0
2022 Adj. PCE:	**0**	**0**	**0**	**0**	**0**	**0**	**0**	**0**	**0**	**0**	**0**	**0**	**0**

3: US Highway 395 & Main St./Phelan Rd.

PHF: 0.986 4:15 PM Count Date: 2/16/2022

	NBL	NBT	NBR	SBL	SBT	SBR	EBL	EBT	EBR	WBL	WBT	WBR	TOTAL
Existing 2022:	164	873	20	248	652	41	36	607	77	11	644	231	3,604
2022 Adj. PCE:	**174**	**990**	**21**	**258**	**805**	**42**	**40**	**618**	**83**	**13**	**657**	**235**	**3,933**

4: US Highway 395 & Poplar St.

PHF: 0.934 4:45 PM Count Date: 2/16/2022

	NBL	NBT	NBR	SBL	SBT	SBR	EBL	EBT	EBR	WBL	WBT	WBR	TOTAL
Existing 2022:	0	1,031	49	18	722	0	0	0	0	8	0	26	1,854
2022 Adj. PCE:	**0**	**1,158**	**50**	**22**	**879**	**0**	**0**	**0**	**0**	**10**	**0**	**27**	**2,145**

5: US Highway 395 & Three Flags Rd.

PHF: 0.897 4:45 PM Count Date: 2/16/2022

	NBL	NBT	NBR	SBL	SBT	SBR	EBL	EBT	EBR	WBL	WBT	WBR	TOTAL
Existing 2022:	43	979	55	14	623	83	42	1	75	59	6	29	2,009
2022 Adj. PCE:	**47**	**1,086**	**127**	**37**	**750**	**84**	**46**	**1**	**78**	**125**	**9**	**63**	**2,451**

6: US Highway 395 & Joshua St.

PHF: 0.893 4:45 PM Count Date: 2/16/2022

	NBL	NBT	NBR	SBL	SBT	SBR	EBL	EBT	EBR	WBL	WBT	WBR	TOTAL
Existing 2022:	16	925	65	74	661	22	54	53	10	62	24	98	2,064
2022 Adj. PCE:	**17**	**1,081**	**89**	**109**	**821**	**23**	**57**	**53**	**10**	**72**	**26**	**121**	**2,478**

7: I-15 SB Ramps & Joshua St.

PHF: 0.946 4:15 PM Count Date: 2/16/2022

	NBL	NBT	NBR	SBL	SBT	SBR	EBL	EBT	EBR	WBL	WBT	WBR	TOTAL
Existing 2022:	0	0	0	25	0	115	0	146	0	0	66	0	352
2022 Adj. PCE:	**0**	**0**	**0**	**26**	**0**	**198**	**0**	**199**	**0**	**0**	**69**	**0**	**492**

8: I-15 NB Ramps & Joshua St.

PHF: 0.976 4:15 PM Count Date: 2/16/2022

	NBL	NBT	NBR	SBL	SBT	SBR	EBL	EBT	EBR	WBL	WBT	WBR	TOTAL
Existing 2022:	0	0	0	0	0	0	77	94	0	0	66	5	242
2022 Adj. PCE:	**0**	**0**	**0**	**0**	**0**	**0**	**129**	**96**	**0**	**0**	**69**	**5**	**299**

Counts Unlimited, Inc.
PO Box 1178
Corona, CA 92878
(951)268-6268

City of Victorville
N/S: US-395
E/W: Phelan Road/Main Street
Weather: Clear

File Name : 03_VIC_395_Phelan AM
Site Code : 05122132
Start Date : 2/16/2022
Page No : 1

Groups Printed- Passenger Vehicles - Large 2 Axle Vehicles - 3 Axle Vehicles - 4+ Axle Trucks

	US-395 Southbound					Main Street Westbound					US-395 Northbound					Phelan Road Eastbound							
Start Time	Left	Thru	Right	RTOR	App. Total	Left	Thru	Right	RTOR	App. Total	Left	Thru	Right	RTOR	App. Total	Left	Thru	Right	RTOR	App. Total	Exclu. Total	Inclu. Total	Int. Total
07:00 AM	25	159	5	1	189	0	51	38	21	89	13	124	3	0	140	10	121	30	13	161	35	579	614
07:15 AM	52	192	6	0	250	3	88	46	17	137	16	130	3	3	149	8	133	24	10	165	30	701	731
07:30 AM	55	191	12	2	258	0	71	40	19	111	22	137	0	0	159	9	148	35	10	192	31	720	751
07:45 AM	43	178	9	2	230	2	70	43	17	115	14	117	2	2	133	10	180	30	7	220	28	698	726
Total	175	720	32	5	927	5	280	167	74	452	65	508	8	5	581	37	582	119	40	738	124	2698	2822
08:00 AM	49	157	5	0	211	3	70	45	27	118	25	113	3	1	141	8	151	27	8	186	36	656	692
08:15 AM	43	186	11	0	240	0	98	37	19	135	12	90	4	1	106	10	120	33	10	163	30	644	674
08:30 AM	49	147	7	5	203	3	72	39	21	114	19	104	1	0	124	8	131	34	12	173	38	614	652
08:45 AM	35	143	9	3	187	2	73	37	14	112	16	88	9	2	113	6	124	26	14	156	33	568	601
Total	176	633	32	8	841	8	313	158	81	479	72	395	17	4	484	32	526	120	44	678	137	2482	2619
Grand Total	351	1353	64	13	1768	13	593	325	155	931	137	903	25	9	1065	69	1108	239	84	1416	261	5180	5441
Apprch %	19.9	76.5	3.6			1.4	63.7	34.9			12.9	84.8	2.3			4.9	78.2	16.9					
Total %	6.8	26.1	1.2		34.1	0.3	11.4	6.3		18	2.6	17.4	0.5		20.6	1.3	21.4	4.6		27.3	4.8	95.2	
Passenger Vehicles	332	1173	58		1575	10	565	297		1019	122	737	23		891	65	1078	227		1451	0	0	4936
% Passenger Vehicles	94.6	86.7	90.6	92.3	88.4	76.9	95.3	91.4	94.8	93.8	89.1	81.6	92	100	83	94.2	97.3	95	96.4	96.7	0	0	90.7
Large 2 Axle Vehicles	5	25	5		36	2	20	5		29	8	30	0		38	3	18	6		30	0	0	133
% Large 2 Axle Vehicles	1.4	1.8	7.8	7.7	2	15.4	3.4	1.5	1.3	2.7	5.8	3.3	0	0	3.5	4.3	1.6	2.5	3.6	2	0	0	2.4
3 Axle Vehicles	2	13	0		15	0	4	0		4	2	13	0		15	0	4	1		5	0	0	39
% 3 Axle Vehicles	0.6	1	0	0	0.8	0	0.7	0	0	0.4	1.5	1.4	0	0	1.4	0	0.4	0.4	0	0.3	0	0	0.7
4+ Axle Trucks	12	142	1		155	1	4	23		34	5	123	2		130	1	8	5		14	0	0	333
% 4+ Axle Trucks	3.4	10.5	1.6	0	8.7	7.7	0.7	7.1	3.9	3.1	3.6	13.6	8	0	12.1	1.4	0.7	2.1	0	0.9	0	0	6.1

	US-395 Southbound				Main Street Westbound				US-395 Northbound				Phelan Road Eastbound				
Start Time	Left	Thru	Right	App. Total	Left	Thru	Right	App. Total	Left	Thru	Right	App. Total	Left	Thru	Right	App. Total	Int. Total
Peak Hour Analysis From 07:00 AM to 08:45 AM - Peak 1 of 1																	
Peak Hour for Entire Intersection Begins at 07:15 AM																	
07:15 AM	52	**192**	6	250	**3**	**88**	**46**	**137**	16	130	**3**	149	8	133	24	165	701
07:30 AM	**55**	191	**12**	**258**	0	71	40	111	22	**137**	0	**159**	9	148	**35**	192	**720**
07:45 AM	43	178	9	230	2	70	43	115	14	117	2	133	**10**	**180**	30	**220**	698
08:00 AM	49	157	5	211	3	70	45	118	**25**	113	3	141	8	151	27	186	656
Total Volume	199	718	32	949	8	299	174	481	77	497	8	582	35	612	116	763	2775
% App. Total	21	75.7	3.4		1.7	62.2	36.2		13.2	85.4	1.4		4.6	80.2	15.2		
PHF	.905	.935	.667	.920	.667	.849	.946	.878	.770	.907	.667	.915	.875	.850	.829	.867	.964

Counts Unlimited, Inc.
PO Box 1178
Corona, CA 92878
(951)268-6268

City of Victorville
N/S: US-395
E/W: Phelan Road/Main Street
Weather: Clear

File Name : 03_VIC_395_Phelan AM
Site Code : 05122132
Start Date : 2/16/2022
Page No : 2

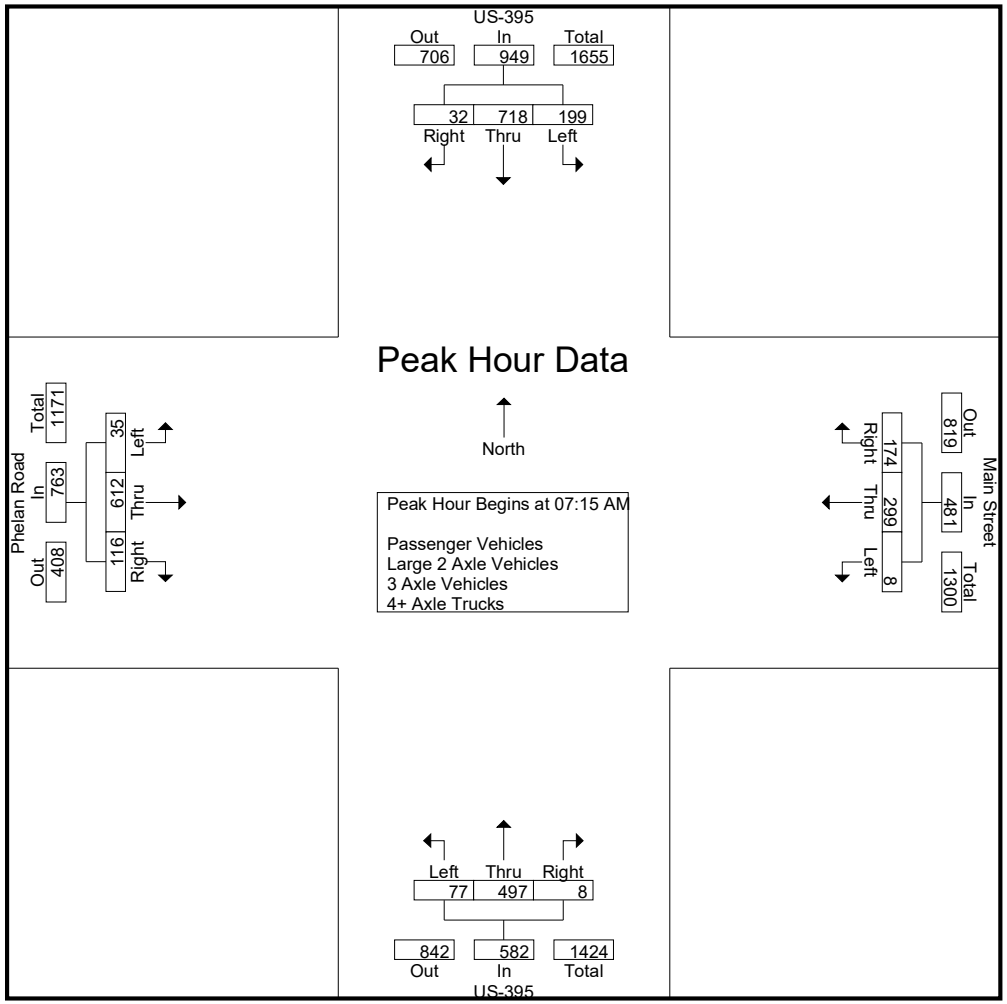

Counts Unlimited, Inc.
PO Box 1178
Corona, CA 92878
(951)268-6268

City of Victorville
N/S: US-395
E/W: Phelan Road/Main Street
Weather: Clear

File Name : 03_VIC_395_Phelan AM
Site Code : 05122132
Start Date : 2/16/2022
Page No : 3

	US-395 Southbound				Main Street Westbound				US-395 Northbound				Phelan Road Eastbound				
Start Time	Left	Thru	Right	App. Total	Left	Thru	Right	App. Total	Left	Thru	Right	App. Total	Left	Thru	Right	App. Total	Int. Total
Peak Hour Analysis From 07:00 AM to 08:45 AM - Peak 1 of 1																	
Peak Hour for Each Approach Begins at:																	
	07:15 AM				07:45 AM				07:15 AM				07:15 AM				
+0 mins.	52	**192**	6	250	2	70	43	115	16	130	**3**	149	8	133	24	165	
+15 mins.	**55**	191	**12**	**258**	**3**	70	**45**	118	22	**137**	0	**159**	9	148	**35**	192	
+30 mins.	43	178	9	230	0	**98**	37	**135**	14	117	2	133	**10**	**180**	30	**220**	
+45 mins.	49	157	5	211	3	72	39	114	**25**	113	3	141	8	151	27	186	
Total Volume	199	718	32	949	8	310	164	482	77	497	8	582	35	612	116	763	
% App. Total	21	75.7	3.4		1.7	64.3	34		13.2	85.4	1.4		4.6	80.2	15.2		
PHF	.905	.935	.667	.920	.667	.791	.911	.893	.770	.907	.667	.915	.875	.850	.829	.867	

Counts Unlimited, Inc.
PO Box 1178
Corona, CA 92878
(951)268-6268

City of Victorville
N/S: US-395
E/W: Phelan Road/Main Street
Weather: Clear

File Name : 03_VIC_395_Phelan AM
Site Code : 05122132
Start Date : 2/16/2022
Page No : 1

Groups Printed- Passenger Vehicles

	US-395 Southbound					Main Street Westbound					US-395 Northbound					Phelan Road Eastbound							
Start Time	Left	Thru	Right	RTOR	App. Total	Left	Thru	Right	RTOR	App. Total	Left	Thru	Right	RTOR	App. Total	Left	Thru	Right	RTOR	App. Total	Exclu. Total	Inclu. Total	Int. Total
07:00 AM	25	145	4	1	174	0	48	34	20	82	10	97	2	0	109	10	114	28	12	152	33	517	550
07:15 AM	49	168	6	0	223	2	85	40	17	127	15	108	3	3	126	8	130	22	10	160	30	636	666
07:30 AM	50	163	11	1	224	0	68	39	18	107	17	114	0	0	131	8	147	33	8	188	27	650	677
07:45 AM	39	158	6	2	203	1	67	39	15	107	13	93	2	2	108	10	176	30	7	216	26	634	660
Total	163	634	27	4	824	3	268	152	70	423	55	412	7	5	474	36	567	113	37	716	116	2437	2553
08:00 AM	47	127	5	0	179	3	68	42	26	113	21	96	2	1	119	7	146	27	8	180	35	591	626
08:15 AM	42	160	10	0	212	0	92	35	19	127	12	76	4	1	92	9	116	32	10	157	30	588	618
08:30 AM	48	130	7	5	185	3	68	35	21	106	18	80	1	0	99	8	125	29	12	162	38	552	590
08:45 AM	32	122	9	3	163	1	69	33	11	103	16	73	9	2	98	5	124	26	14	155	30	519	549
Total	169	539	31	8	739	7	297	145	77	449	67	325	16	4	408	29	511	114	44	654	133	2250	2383
Grand Total	332	1173	58	12	1563	10	565	297	147	872	122	737	23	9	882	65	1078	227	81	1370	249	4687	4936
Apprch %	21.2	75	3.7			1.1	64.8	34.1			13.8	83.6	2.6			4.7	78.7	16.6					
Total %	7.1	25	1.2		33.3	0.2	12.1	6.3		18.6	2.6	15.7	0.5		18.8	1.4	23	4.8		29.2	5	95	

	US-395 Southbound				Main Street Westbound				US-395 Northbound				Phelan Road Eastbound				
Start Time	Left	Thru	Right	App. Total	Left	Thru	Right	App. Total	Left	Thru	Right	App. Total	Left	Thru	Right	App. Total	Int. Total
Peak Hour Analysis From 07:15 AM to 08:00 AM - Peak 1 of 1																	
Peak Hour for Entire Intersection Begins at 07:15 AM																	
07:15 AM	49	**168**	6	223	2	**85**	40	**127**	15	108	**3**	126	8	130	22	160	636
07:30 AM	**50**	163	**11**	**224**	0	68	39	107	17	**114**	0	**131**	8	147	**33**	188	**650**
07:45 AM	39	158	6	203	1	67	39	107	13	93	2	108	**10**	**176**	30	**216**	634
08:00 AM	47	127	5	179	**3**	68	**42**	113	**21**	96	2	119	7	146	27	180	591
Total Volume	185	616	28	829	6	288	160	454	66	411	7	484	33	599	112	744	2511
% App. Total	22.3	74.3	3.4		1.3	63.4	35.2		13.6	84.9	1.4		4.4	80.5	15.1		
PHF	.925	.917	.636	.925	.500	.847	.952	.894	.786	.901	.583	.924	.825	.851	.848	.861	.966

Counts Unlimited, Inc.
PO Box 1178
Corona, CA 92878
(951)268-6268

City of Victorville
N/S: US-395
E/W: Phelan Road/Main Street
Weather: Clear

File Name : 03_VIC_395_Phelan AM
Site Code : 05122132
Start Date : 2/16/2022
Page No : 2

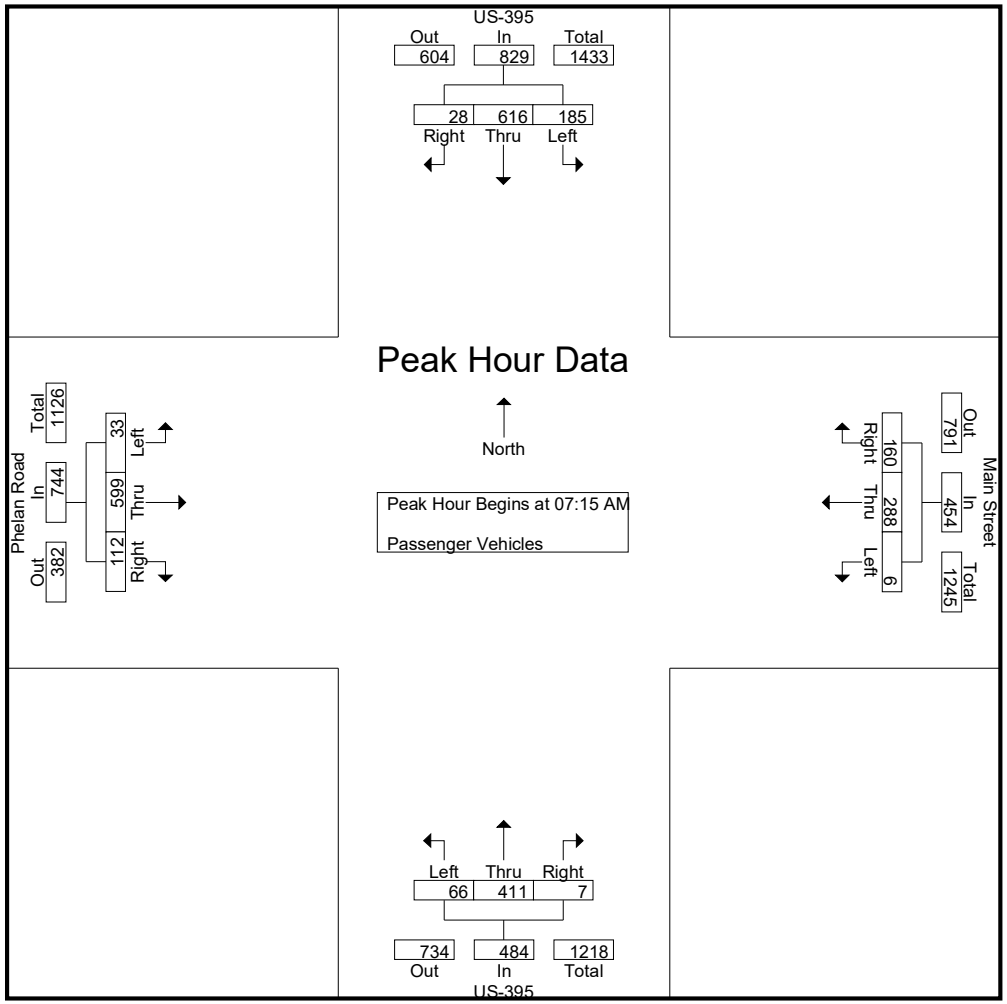

Counts Unlimited, Inc.
PO Box 1178
Corona, CA 92878
(951)268-6268

City of Victorville
N/S: US-395
E/W: Phelan Road/Main Street
Weather: Clear

File Name : 03_VIC_395_Phelan AM
Site Code : 05122132
Start Date : 2/16/2022
Page No : 3

	US-395 Southbound				Main Street Westbound				US-395 Northbound				Phelan Road Eastbound				
Start Time	Left	Thru	Right	App. Total	Left	Thru	Right	App. Total	Left	Thru	Right	App. Total	Left	Thru	Right	App. Total	Int. Total
Peak Hour Analysis From 07:15 AM to 08:00 AM - Peak 1 of 1																	
Peak Hour for Each Approach Begins at:																	
	07:15 AM				07:15 AM				07:15 AM				07:15 AM				
+0 mins.	49	**168**	6	223	2	**85**	40	**127**	15	108	**3**	126	8	130	22	160	
+15 mins.	**50**	163	**11**	**224**	0	68	39	107	17	**114**	0	**131**	8	147	**33**	188	
+30 mins.	39	158	6	203	1	67	39	107	13	93	2	108	**10**	**176**	30	**216**	
+45 mins.	47	127	5	179	**3**	68	**42**	113	**21**	96	2	119	7	146	27	180	
Total Volume	185	616	28	829	6	288	160	454	66	411	7	484	33	599	112	744	
% App. Total	22.3	74.3	3.4		1.3	63.4	35.2		13.6	84.9	1.4		4.4	80.5	15.1		
PHF	.925	.917	.636	.925	.500	.847	.952	.894	.786	.901	.583	.924	.825	.851	.848	.861	

Counts Unlimited, Inc.
PO Box 1178
Corona, CA 92878
(951)268-6268

City of Victorville
N/S: US-395
E/W: Phelan Road/Main Street
Weather: Clear

File Name : 03_VIC_395_Phelan AM
Site Code : 05122132
Start Date : 2/16/2022
Page No : 1

Groups Printed- Large 2 Axle Vehicles

	US-395 Southbound					Main Street Westbound					US-395 Northbound					Phelan Road Eastbound							
Start Time	Left	Thru	Right	RTOR	App. Total	Left	Thru	Right	RTOR	App. Total	Left	Thru	Right	RTOR	App. Total	Left	Thru	Right	RTOR	App. Total	Exclu. Total	Inclu. Total	Int. Total
07:00 AM	0	0	1	0	1	0	1	0	0	1	3	9	0	0	12	0	6	1	1	7	1	21	22
07:15 AM	0	3	0	0	3	1	2	1	0	4	1	4	0	0	5	0	3	1	0	4	0	16	16
07:30 AM	1	7	1	1	9	0	2	0	0	2	2	2	0	0	4	1	1	2	2	4	3	19	22
07:45 AM	1	4	2	0	7	0	3	1	0	4	0	1	0	0	1	0	2	0	0	2	0	14	14
Total	2	14	4	1	20	1	8	2	0	11	6	16	0	0	22	1	12	4	3	17	4	70	74
08:00 AM	1	6	0	0	7	0	2	0	0	2	1	4	0	0	5	1	2	0	0	3	0	17	17
08:15 AM	1	1	1	0	3	0	4	0	0	4	0	1	0	0	1	0	2	0	0	2	0	10	10
08:30 AM	0	2	0	0	2	0	3	1	0	4	1	5	0	0	6	0	2	2	0	4	0	16	16
08:45 AM	1	2	0	0	3	1	3	2	2	6	0	4	0	0	4	1	0	0	0	1	2	14	16
Total	3	11	1	0	15	1	12	3	2	16	2	14	0	0	16	2	6	2	0	10	2	57	59
Grand Total	5	25	5	1	35	2	20	5	2	27	8	30	0	0	38	3	18	6	3	27	6	127	133
Apprch %	14.3	71.4	14.3			7.4	74.1	18.5			21.1	78.9	0			11.1	66.7	22.2					
Total %	3.9	19.7	3.9		27.6	1.6	15.7	3.9		21.3	6.3	23.6	0		29.9	2.4	14.2	4.7		21.3	4.5	95.5	

	US-395 Southbound				Main Street Westbound				US-395 Northbound				Phelan Road Eastbound				
Start Time	Left	Thru	Right	App. Total	Left	Thru	Right	App. Total	Left	Thru	Right	App. Total	Left	Thru	Right	App. Total	Int. Total
Peak Hour Analysis From 07:15 AM to 08:00 AM - Peak 1 of 1																	
Peak Hour for Entire Intersection Begins at 07:15 AM																	
07:15 AM	0	3	0	3	**1**	2	**1**	**4**	1	**4**	0	**5**	0	**3**	1	**4**	16
07:30 AM	**1**	**7**	1	**9**	0	2	0	2	**2**	2	0	4	**1**	1	**2**	4	**19**
07:45 AM	1	4	**2**	7	0	**3**	1	4	0	1	0	1	0	2	0	2	14
08:00 AM	1	6	0	7	0	2	0	2	1	4	0	5	1	2	0	3	17
Total Volume	3	20	3	26	1	9	2	12	4	11	0	15	2	8	3	13	66
% App. Total	11.5	76.9	11.5		8.3	75	16.7		26.7	73.3	0		15.4	61.5	23.1		
PHF	.750	.714	.375	.722	.250	.750	.500	.750	.500	.688	.000	.750	.500	.667	.375	.813	.868

Counts Unlimited, Inc.
PO Box 1178
Corona, CA 92878
(951)268-6268

City of Victorville
N/S: US-395
E/W: Phelan Road/Main Street
Weather: Clear

File Name : 03_VIC_395_Phelan AM
Site Code : 05122132
Start Date : 2/16/2022
Page No : 2

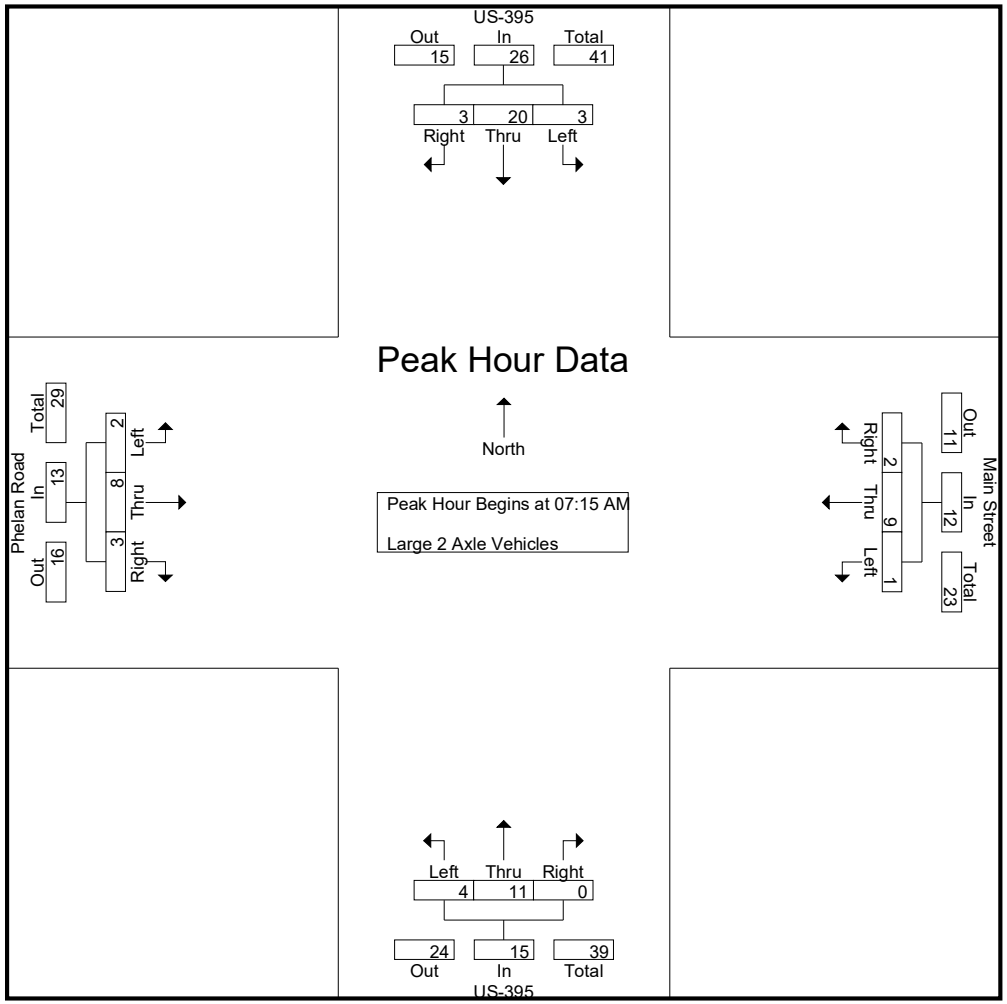

Counts Unlimited, Inc.
PO Box 1178
Corona, CA 92878
(951)268-6268

City of Victorville
N/S: US-395
E/W: Phelan Road/Main Street
Weather: Clear

File Name : 03_VIC_395_Phelan AM
Site Code : 05122132
Start Date : 2/16/2022
Page No : 3

	US-395 Southbound				Main Street Westbound				US-395 Northbound				Phelan Road Eastbound				
Start Time	Left	Thru	Right	App. Total	Left	Thru	Right	App. Total	Left	Thru	Right	App. Total	Left	Thru	Right	App. Total	Int. Total
Peak Hour Analysis From 07:15 AM to 08:00 AM - Peak 1 of 1																	
Peak Hour for Each Approach Begins at:																	
	07:15 AM				07:15 AM				07:15 AM				07:15 AM				
+0 mins.	0	3	0	3	**1**	2	**1**	**4**	1	**4**	0	**5**	0	**3**	1	**4**	
+15 mins.	**1**	**7**	1	**9**	0	2	0	2	**2**	2	0	4	**1**	1	**2**	4	
+30 mins.	1	4	**2**	7	0	**3**	1	4	0	1	0	1	0	2	0	2	
+45 mins.	1	6	0	7	0	2	0	2	1	4	0	5	1	2	0	3	
Total Volume	3	20	3	26	1	9	2	12	4	11	0	15	2	8	3	13	
% App. Total	11.5	76.9	11.5		8.3	75	16.7		26.7	73.3	0		15.4	61.5	23.1		
PHF	.750	.714	.375	.722	.250	.750	.500	.750	.500	.688	.000	.750	.500	.667	.375	.813	

Counts Unlimited, Inc.
PO Box 1178
Corona, CA 92878
(951)268-6268

City of Victorville
N/S: US-395
E/W: Phelan Road/Main Street
Weather: Clear

File Name : 03_VIC_395_Phelan AM
Site Code : 05122132
Start Date : 2/16/2022

Groups Printed- 3 Axle Vehicles

	US-395 Southbound					Main Street Westbound					US-395 Northbound					Phelan Road Eastbound							
Start Time	Left	Thru	Right	RTOR	App. Total	Left	Thru	Right	RTOR	App. Total	Left	Thru	Right	RTOR	App. Total	Left	Thru	Right	RTOR	App. Total	Exclu. Total	Inclu. Total	Int. Total
07:00 AM	0	0	0	0	0	0	0	0	0	0	0	3	0	0	3	0	0	0	0	0	0	3	3
07:15 AM	0	1	0	0	1	0	1	0	0	1	0	0	0	0	0	0	0	1	0	1	0	3	3
07:30 AM	1	2	0	0	3	0	0	0	0	0	0	3	0	0	3	0	0	0	0	0	0	6	6
07:45 AM	0	2	0	0	2	0	0	0	0	0	0	2	0	0	2	0	0	0	0	0	0	4	4
Total	1	5	0	0	6	0	1	0	0	1	0	8	0	0	8	0	0	1	0	1	0	16	16
08:00 AM	1	2	0	0	3	0	0	0	0	0	2	1	0	0	3	0	1	0	0	1	0	7	7
08:15 AM	0	3	0	0	3	0	2	0	0	2	0	0	0	0	0	0	0	0	0	0	0	5	5
08:30 AM	0	1	0	0	1	0	1	0	0	1	0	2	0	0	2	0	3	0	0	3	0	7	7
08:45 AM	0	2	0	0	2	0	0	0	0	0	0	2	0	0	2	0	0	0	0	0	0	4	4
Total	1	8	0	0	9	0	3	0	0	3	2	5	0	0	7	0	4	0	0	4	0	23	23
Grand Total	2	13	0	0	15	0	4	0	0	4	2	13	0	0	15	0	4	1	0	5	0	39	39
Apprch %	13.3	86.7	0			0	100	0			13.3	86.7	0			0	80	20					
Total %	5.1	33.3	0		38.5	0	10.3	0		10.3	5.1	33.3	0		38.5	0	10.3	2.6		12.8	0	100	

	US-395 Southbound				Main Street Westbound				US-395 Northbound				Phelan Road Eastbound				
Start Time	Left	Thru	Right	App. Total	Left	Thru	Right	App. Total	Left	Thru	Right	App. Total	Left	Thru	Right	App. Total	Int. Total
Peak Hour Analysis From 07:15 AM to 08:00 AM - Peak 1 of 1																	
Peak Hour for Entire Intersection Begins at 07:15 AM																	
07:15 AM	0	1	0	1	0	**1**	0	**1**	0	0	0	0	0	0	**1**	**1**	3
07:30 AM	**1**	**2**	0	**3**	0	0	0	0	0	**3**	0	**3**	0	0	0	0	6
07:45 AM	0	2	0	2	0	0	0	0	0	2	0	2	0	0	0	0	4
08:00 AM	1	2	0	3	0	0	0	0	**2**	1	0	3	0	**1**	0	1	**7**
Total Volume	2	7	0	9	0	1	0	1	2	6	0	8	0	1	1	2	20
% App. Total	22.2	77.8	0		0	100	0		25	75	0		0	50	50		
PHF	.500	.875	.000	.750	.000	.250	.000	.250	.250	.500	.000	.667	.000	.250	.250	.500	.714

Counts Unlimited, Inc.
PO Box 1178
Corona, CA 92878
(951)268-6268

City of Victorville
N/S: US-395
E/W: Phelan Road/Main Street
Weather: Clear

File Name : 03_VIC_395_Phelan AM
Site Code : 05122132
Start Date : 2/16/2022
Page No : 2

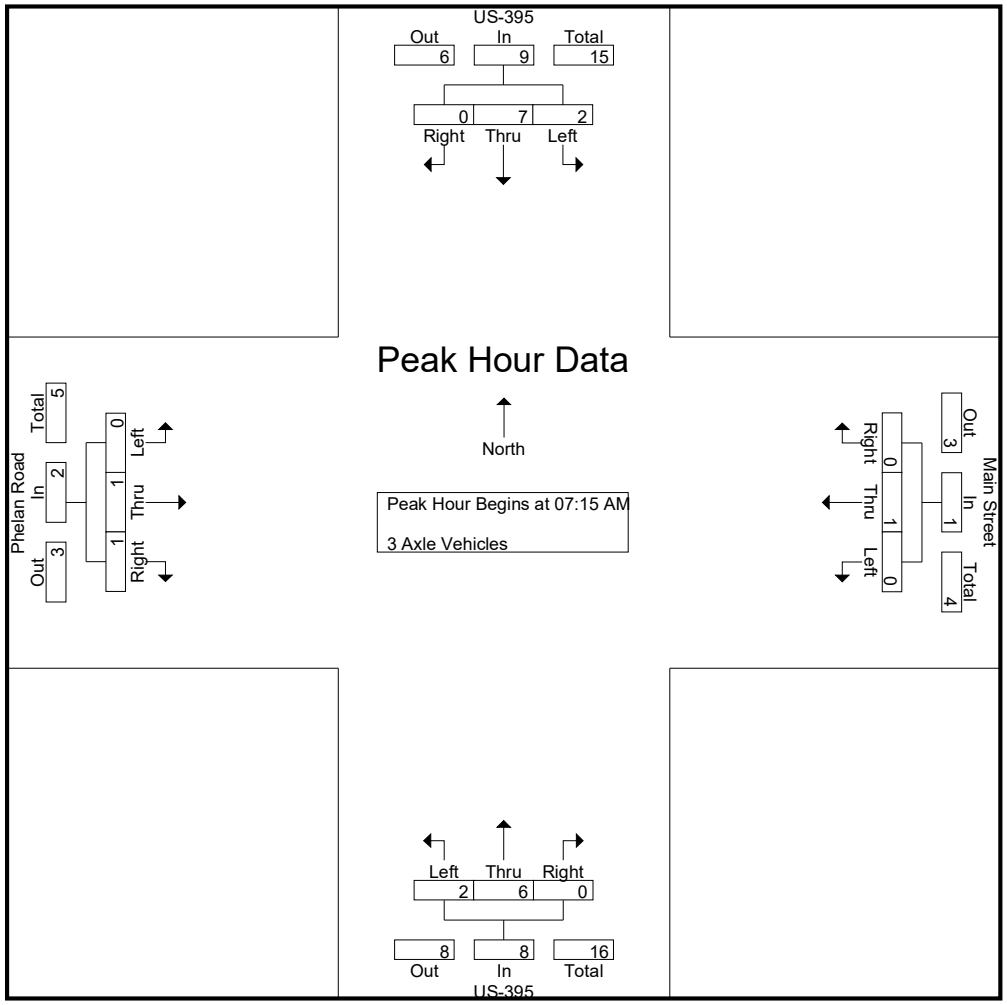

Counts Unlimited, Inc.
PO Box 1178
Corona, CA 92878
(951)268-6268

City of Victorville
N/S: US-395
E/W: Phelan Road/Main Street
Weather: Clear

File Name : 03_VIC_395_Phelan AM
Site Code : 05122132
Start Date : 2/16/2022
Page No : 3

	US-395 Southbound				Main Street Westbound				US-395 Northbound				Phelan Road Eastbound				
Start Time	Left	Thru	Right	App. Total	Left	Thru	Right	App. Total	Left	Thru	Right	App. Total	Left	Thru	Right	App. Total	Int. Total
Peak Hour Analysis From 07:15 AM to 08:00 AM - Peak 1 of 1																	
Peak Hour for Each Approach Begins at:																	
	07:15 AM				07:15 AM				07:15 AM				07:15 AM				
+0 mins.	0	1	0	1	0	**1**	0	**1**	0	0	0	0	0	0	**1**	**1**	
+15 mins.	**1**	**2**	0	**3**	0	0	0	0	0	**3**	0	**3**	0	0	0	0	
+30 mins.	0	2	0	2	0	0	0	0	0	2	0	2	0	0	0	0	
+45 mins.	1	2	0	3	0	0	0	0	**2**	1	0	3	0	**1**	0	1	
Total Volume	2	7	0	9	0	1	0	1	2	6	0	8	0	1	1	2	
% App. Total	22.2	77.8	0		0	100	0		25	75	0		0	50	50		
PHF	.500	.875	.000	.750	.000	.250	.000	.250	.250	.500	.000	.667	.000	.250	.250	.500	

Counts Unlimited, Inc.
PO Box 1178
Corona, CA 92878
(951)268-6268

City of Victorville
N/S: US-395
E/W: Phelan Road/Main Street
Weather: Clear

File Name : 03_VIC_395_Phelan AM
Site Code : 05122132
Start Date : 2/16/2022

Groups Printed- 4+ Axle Trucks

	US-395 Southbound					Main Street Westbound					US-395 Northbound					Phelan Road Eastbound							
Start Time	Left	Thru	Right	RTOR	App. Total	Left	Thru	Right	RTOR	App. Total	Left	Thru	Right	RTOR	App. Total	Left	Thru	Right	RTOR	App. Total	Exclu. Total	Inclu. Total	Int. Total
07:00 AM	0	14	0	0	14	0	2	4	1	6	0	15	1	0	16	0	1	1	0	2	1	38	39
07:15 AM	3	20	0	0	23	0	0	5	0	5	0	18	0	0	18	0	0	0	0	0	0	46	46
07:30 AM	3	19	0	0	22	0	1	1	1	2	3	18	0	0	21	0	0	0	0	0	1	45	46
07:45 AM	3	14	1	0	18	1	0	3	2	4	1	21	0	0	22	0	2	0	0	2	2	46	48
Total	9	67	1	0	77	1	3	13	4	17	4	72	1	0	77	0	3	1	0	4	4	175	179
08:00 AM	0	22	0	0	22	0	0	3	1	3	1	12	1	0	14	0	2	0	0	2	1	41	42
08:15 AM	0	22	0	0	22	0	0	2	0	2	0	13	0	0	13	1	2	1	0	4	0	41	41
08:30 AM	1	14	0	0	15	0	0	3	0	3	0	17	0	0	17	0	1	3	0	4	0	39	39
08:45 AM	2	17	0	0	19	0	1	2	1	3	0	9	0	0	9	0	0	0	0	0	1	31	32
Total	3	75	0	0	78	0	1	10	2	11	1	51	1	0	53	1	5	4	0	10	2	152	154
Grand Total	12	142	1	0	155	1	4	23	6	28	5	123	2	0	130	1	8	5	0	14	6	327	333
Apprch %	7.7	91.6	0.6			3.6	14.3	82.1			3.8	94.6	1.5			7.1	57.1	35.7					
Total %	3.7	43.4	0.3		47.4	0.3	1.2	7		8.6	1.5	37.6	0.6		39.8	0.3	2.4	1.5		4.3	1.8	98.2	

	US-395 Southbound				Main Street Westbound				US-395 Northbound				Phelan Road Eastbound				
Start Time	Left	Thru	Right	App. Total	Left	Thru	Right	App. Total	Left	Thru	Right	App. Total	Left	Thru	Right	App. Total	Int. Total
Peak Hour Analysis From 07:15 AM to 08:00 AM - Peak 1 of 1																	
Peak Hour for Entire Intersection Begins at 07:15 AM																	
07:15 AM	**3**	20	0	**23**	0	0	**5**	**5**	0	18	0	18	0	0	0	0	**46**
07:30 AM	3	19	0	22	0	**1**	1	2	**3**	18	0	21	0	0	0	0	45
07:45 AM	3	14	**1**	18	**1**	0	3	4	1	**21**	0	**22**	0	**2**	0	**2**	46
08:00 AM	0	**22**	0	22	0	0	3	3	1	12	**1**	14	0	2	0	2	41
Total Volume	9	75	1	85	1	1	12	14	5	69	1	75	0	4	0	4	178
% App. Total	10.6	88.2	1.2		7.1	7.1	85.7		6.7	92	1.3		0	100	0		
PHF	.750	.852	.250	.924	.250	.250	.600	.700	.417	.821	.250	.852	.000	.500	.000	.500	.967

Counts Unlimited, Inc.
PO Box 1178
Corona, CA 92878
(951)268-6268

City of Victorville
N/S: US-395
E/W: Phelan Road/Main Street
Weather: Clear

File Name : 03_VIC_395_Phelan AM
Site Code : 05122132
Start Date : 2/16/2022
Page No : 2

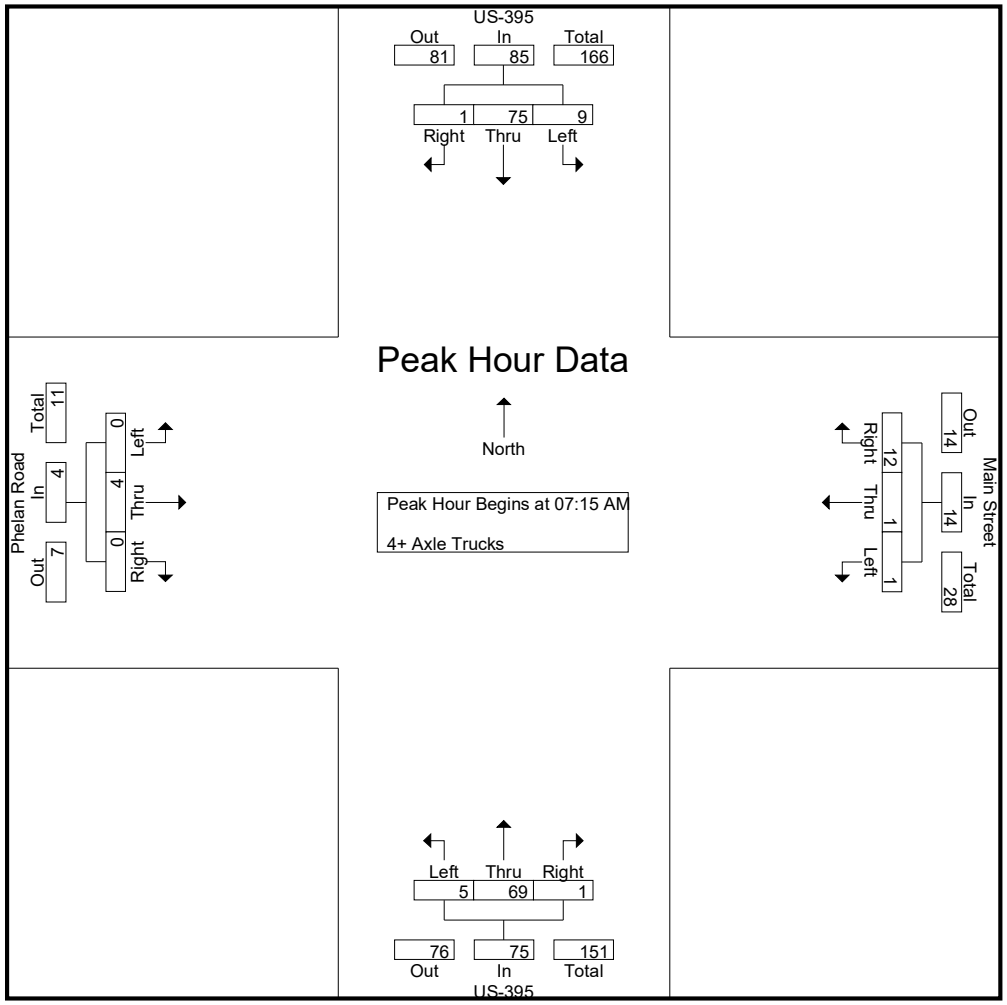

Counts Unlimited, Inc.
PO Box 1178
Corona, CA 92878
(951)268-6268

City of Victorville
N/S: US-395
E/W: Phelan Road/Main Street
Weather: Clear

File Name : 03_VIC_395_Phelan AM
Site Code : 05122132
Start Date : 2/16/2022
Page No : 3

	US-395 Southbound				Main Street Westbound				US-395 Northbound				Phelan Road Eastbound				
Start Time	Left	Thru	Right	App. Total	Left	Thru	Right	App. Total	Left	Thru	Right	App. Total	Left	Thru	Right	App. Total	Int. Total
Peak Hour Analysis From 07:15 AM to 08:00 AM - Peak 1 of 1																	
Peak Hour for Each Approach Begins at:																	
	07:15 AM				07:15 AM				07:15 AM				07:15 AM				
+0 mins.	**3**	20	0	**23**	0	0	**5**	**5**	0	18	0	18	0	0	0	0	
+15 mins.	3	19	0	22	0	**1**	1	2	**3**	18	0	21	0	0	0	0	
+30 mins.	3	14	**1**	18	**1**	0	3	4	1	**21**	0	**22**	0	**2**	0	**2**	
+45 mins.	0	**22**	0	22	0	0	3	3	1	12	**1**	14	0	2	0	2	
Total Volume	9	75	1	85	1	1	12	14	5	69	1	75	0	4	0	4	
% App. Total	10.6	88.2	1.2		7.1	7.1	85.7		6.7	92	1.3		0	100	0		
PHF	.750	.852	.250	.924	.250	.250	.600	.700	.417	.821	.250	.852	.000	.500	.000	.500	

Counts Unlimited, Inc.
PO Box 1178
Corona, CA 92878
(951)268-6268

City of Victorville
N/S: US-395
E/W: Phelan Road/Main Street
Weather: Clear

File Name : 03_VIC_395_Phelan PM
Site Code : 05122132
Start Date : 2/16/2022
Page No : 1

Groups Printed- Passenger Vehicles - Large 2 Axle Vehicles - 3 Axle Vehicles - 4+ Axle Trucks

	US-395 Southbound					Main Street Westbound					US-395 Northbound					Phelan Road Eastbound							
Start Time	Left	Thru	Right	RTOR	App. Total	Left	Thru	Right	RTOR	App. Total	Left	Thru	Right	RTOR	App. Total	Left	Thru	Right	RTOR	App. Total	Exclu. Total	Inclu. Total	Int. Total
04:00 PM	50	164	11	4	225	3	127	51	28	181	32	221	8	1	261	10	162	26	5	198	38	865	903
04:15 PM	72	142	9	0	223	2	178	52	17	232	40	190	1	0	231	9	176	19	8	204	25	890	915
04:30 PM	59	194	9	3	262	4	157	51	13	212	29	226	8	1	263	6	122	13	2	141	19	878	897
04:45 PM	52	142	10	2	204	3	156	56	19	215	34	221	5	2	260	9	160	21	6	190	29	869	898
Total	233	642	39	9	914	12	618	210	77	840	135	858	22	4	1015	34	620	79	21	733	111	3502	3613
05:00 PM	65	145	13	3	223	2	153	72	17	227	52	186	5	1	243	12	149	20	5	181	26	874	900
05:15 PM	60	192	10	2	262	3	138	70	31	211	40	204	5	1	249	8	142	18	10	168	44	890	934
05:30 PM	47	140	7	0	194	4	158	56	15	218	41	219	4	2	264	5	141	33	7	179	24	855	879
05:45 PM	47	124	10	0	181	4	154	71	20	229	29	224	14	1	267	5	143	16	9	164	30	841	871
Total	219	601	40	5	860	13	603	269	83	885	162	833	28	5	1023	30	575	87	31	692	124	3460	3584
Grand Total	452	1243	79	14	1774	25	1221	479	160	1725	297	1691	50	9	2038	64	1195	166	52	1425	235	6962	7197
Apprch %	25.5	70.1	4.5			1.4	70.8	27.8			14.6	83	2.5			4.5	83.9	11.6					
Total %	6.5	17.9	1.1		25.5	0.4	17.5	6.9		24.8	4.3	24.3	0.7		29.3	0.9	17.2	2.4		20.5	3.3	96.7	
Passenger Vehicles	444	1064	77		1598	24	1199	472		1855	277	1546	46		1878	61	1171	159		1441	0	0	6772
% Passenger Vehicles	98.2	85.6	97.5	92.9	89.4	96	98.2	98.5	100	98.4	93.3	91.4	92	100	91.7	95.3	98	95.8	96.2	97.6	0	0	94.1
Large 2 Axle Vehicles	3	33	1		38	0	16	4		20	10	31	2		43	1	18	2		23	0	0	124
% Large 2 Axle Vehicles	0.7	2.7	1.3	7.1	2.1	0	1.3	0.8	0	1.1	3.4	1.8	4	0	2.1	1.6	1.5	1.2	3.8	1.6	0	0	1.7
3 Axle Vehicles	1	13	1		15	0	1	0		1	3	14	0		17	1	2	2		5	0	0	38
% 3 Axle Vehicles	0.2	1	1.3	0	0.8	0	0.1	0	0	0.1	1	0.8	0	0	0.8	1.6	0.2	1.2	0	0.3	0	0	0.5
4+ Axle Trucks	4	133	0		137	1	5	3		9	7	100	2		109	1	4	3		8	0	0	263
% 4+ Axle Trucks	0.9	10.7	0	0	7.7	4	0.4	0.6	0	0.5	2.4	5.9	4	0	5.3	1.6	0.3	1.8	0	0.5	0	0	3.7

	US-395 Southbound				Main Street Westbound				US-395 Northbound				Phelan Road Eastbound				
Start Time	Left	Thru	Right	App. Total	Left	Thru	Right	App. Total	Left	Thru	Right	App. Total	Left	Thru	Right	App. Total	Int. Total
Peak Hour Analysis From 04:00 PM to 05:45 PM - Peak 1 of 1																	
Peak Hour for Entire Intersection Begins at 04:15 PM																	
04:15 PM	**72**	142	9	223	2	**178**	52	**232**	40	190	1	231	9	**176**	19	**204**	**890**
04:30 PM	59	**194**	9	**262**	**4**	157	51	212	29	**226**	**8**	**263**	6	122	13	141	878
04:45 PM	52	142	10	204	3	156	56	215	34	221	5	260	9	160	**21**	190	869
05:00 PM	65	145	**13**	223	2	153	**72**	227	**52**	186	5	243	**12**	149	20	181	874
Total Volume	248	623	41	912	11	644	231	886	155	823	19	997	36	607	73	716	3511
% App. Total	27.2	68.3	4.5		1.2	72.7	26.1		15.5	82.5	1.9		5	84.8	10.2		
PHF	.861	.803	.788	.870	.688	.904	.802	.955	.745	.910	.594	.948	.750	.862	.869	.877	.986

Counts Unlimited, Inc.
PO Box 1178
Corona, CA 92878
(951)268-6268

City of Victorville
N/S: US-395
E/W: Phelan Road/Main Street
Weather: Clear

File Name : 03_VIC_395_Phelan PM
Site Code : 05122132
Start Date : 2/16/2022
Page No : 2

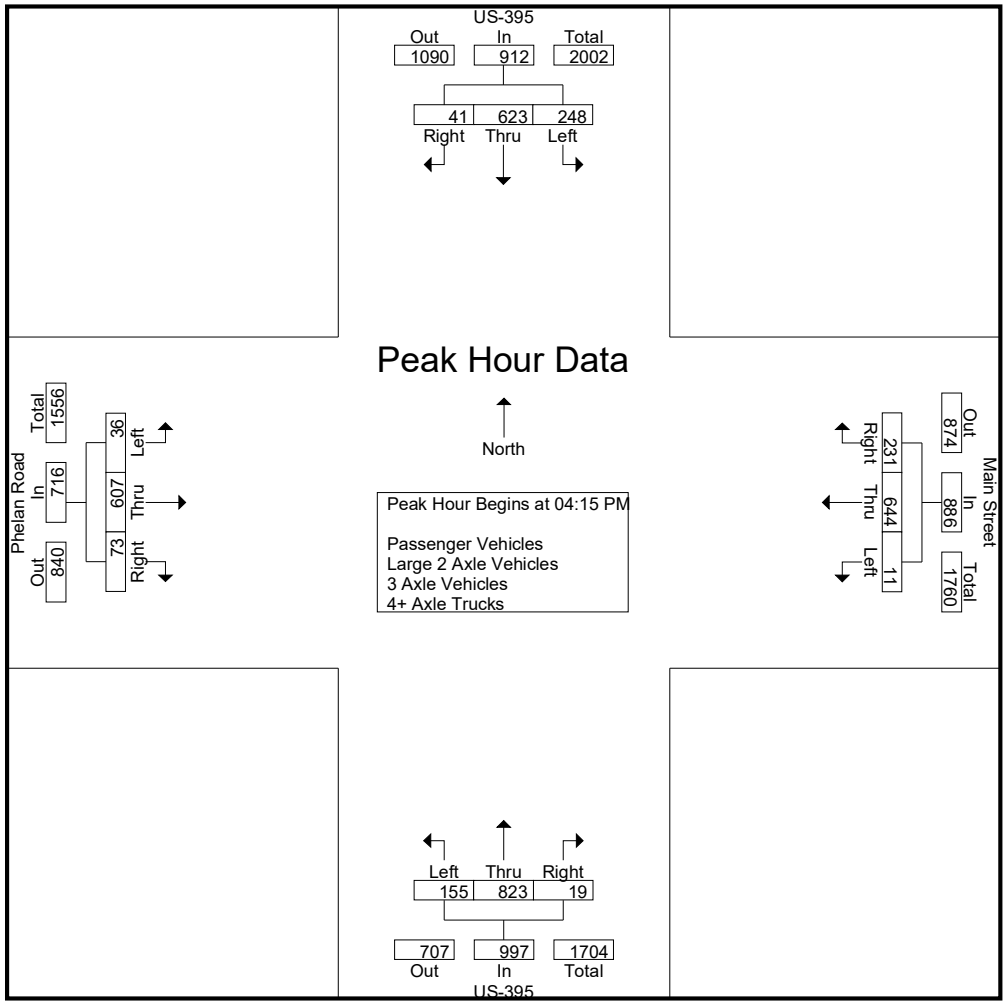

Counts Unlimited, Inc.
PO Box 1178
Corona, CA 92878
(951)268-6268

City of Victorville
N/S: US-395
E/W: Phelan Road/Main Street
Weather: Clear

File Name : 03_VIC_395_Phelan PM
Site Code : 05122132
Start Date : 2/16/2022
Page No : 3

	US-395 Southbound				Main Street Westbound				US-395 Northbound				Phelan Road Eastbound				
Start Time	Left	Thru	Right	App. Total	Left	Thru	Right	App. Total	Left	Thru	Right	App. Total	Left	Thru	Right	App. Total	Int. Total
Peak Hour Analysis From 04:00 PM to 05:45 PM - Peak 1 of 1																	
Peak Hour for Each Approach Begins at:																	
	04:30 PM				04:15 PM				05:00 PM				04:00 PM				
+0 mins.	59	**194**	9	**262**	2	**178**	52	**232**	**52**	186	5	243	**10**	162	**26**	198	
+15 mins.	52	142	10	204	**4**	157	51	212	40	204	5	249	9	**176**	19	**204**	
+30 mins.	**65**	145	**13**	223	3	156	56	215	41	219	4	264	6	122	13	141	
+45 mins.	60	192	10	262	2	153	**72**	227	29	**224**	**14**	**267**	9	160	21	190	
Total Volume	236	673	42	951	11	644	231	886	162	833	28	1023	34	620	79	733	
% App. Total	24.8	70.8	4.4		1.2	72.7	26.1		15.8	81.4	2.7		4.6	84.6	10.8		
PHF	.908	.867	.808	.907	.688	.904	.802	.955	.779	.930	.500	.958	.850	.881	.760	.898	

Counts Unlimited, Inc.
PO Box 1178
Corona, CA 92878
(951)268-6268

City of Victorville
N/S: US-395
E/W: Phelan Road/Main Street
Weather: Clear

File Name : 03_VIC_395_Phelan PM
Site Code : 05122132
Start Date : 2/16/2022
Page No : 1

Groups Printed- Passenger Vehicles

	US-395 Southbound					Main Street Westbound					US-395 Northbound					Phelan Road Eastbound							
Start Time	Left	Thru	Right	RTOR	App. Total	Left	Thru	Right	RTOR	App. Total	Left	Thru	Right	RTOR	App. Total	Left	Thru	Right	RTOR	App. Total	Exclu. Total	Inclu. Total	Int. Total
04:00 PM	50	140	11	4	201	3	126	51	28	180	30	203	8	1	241	10	160	25	4	195	37	817	854
04:15 PM	71	124	9	0	204	1	176	51	17	228	36	175	1	0	212	8	171	18	7	197	24	841	865
04:30 PM	57	171	9	3	237	4	151	51	13	206	26	208	6	1	240	6	120	12	2	138	19	821	840
04:45 PM	52	125	9	1	186	3	154	54	19	211	32	202	5	2	239	9	154	21	6	184	28	820	848
Total	230	560	38	8	828	11	607	207	77	825	124	788	20	4	932	33	605	76	19	714	108	3299	3407
05:00 PM	62	126	13	3	201	2	149	71	17	222	52	167	5	1	224	10	147	19	5	176	26	823	849
05:15 PM	59	163	10	2	232	3	138	69	31	210	37	179	5	1	221	8	139	17	10	164	44	827	871
05:30 PM	47	114	7	0	168	4	157	55	15	216	37	207	2	2	246	5	140	32	7	177	24	807	831
05:45 PM	46	101	9	0	156	4	148	70	20	222	27	205	14	1	246	5	140	15	9	160	30	784	814
Total	214	504	39	5	757	13	592	265	83	870	153	758	26	5	937	28	566	83	31	677	124	3241	3365
Grand Total	444	1064	77	13	1585	24	1199	472	160	1695	277	1546	46	9	1869	61	1171	159	50	1391	232	6540	6772
Apprch %	28	67.1	4.9			1.4	70.7	27.8			14.8	82.7	2.5			4.4	84.2	11.4					
Total %	6.8	16.3	1.2		24.2	0.4	18.3	7.2		25.9	4.2	23.6	0.7		28.6	0.9	17.9	2.4		21.3	3.4	96.6	

	US-395 Southbound				Main Street Westbound				US-395 Northbound				Phelan Road Eastbound				
Start Time	Left	Thru	Right	App. Total	Left	Thru	Right	App. Total	Left	Thru	Right	App. Total	Left	Thru	Right	App. Total	Int. Total
Peak Hour Analysis From 04:15 PM to 05:00 PM - Peak 1 of 1																	
Peak Hour for Entire Intersection Begins at 04:15 PM																	
04:15 PM	**71**	124	9	204	1	**176**	51	**228**	36	175	1	212	8	**171**	18	**197**	**841**
04:30 PM	57	**171**	9	**237**	**4**	151	51	206	26	**208**	**6**	**240**	6	120	12	138	821
04:45 PM	52	125	9	186	3	154	54	211	32	202	5	239	9	154	**21**	184	820
05:00 PM	62	126	**13**	201	2	149	**71**	222	**52**	167	5	224	**10**	147	19	176	823
Total Volume	242	546	40	828	10	630	227	867	146	752	17	915	33	592	70	695	3305
% App. Total	29.2	65.9	4.8		1.2	72.7	26.2		16	82.2	1.9		4.7	85.2	10.1		
PHF	.852	.798	.769	.873	.625	.895	.799	.951	.702	.904	.708	.953	.825	.865	.833	.882	.982

Counts Unlimited, Inc.
PO Box 1178
Corona, CA 92878
(951)268-6268

City of Victorville
N/S: US-395
E/W: Phelan Road/Main Street
Weather: Clear

File Name : 03_VIC_395_Phelan PM
Site Code : 05122132
Start Date : 2/16/2022
Page No : 2

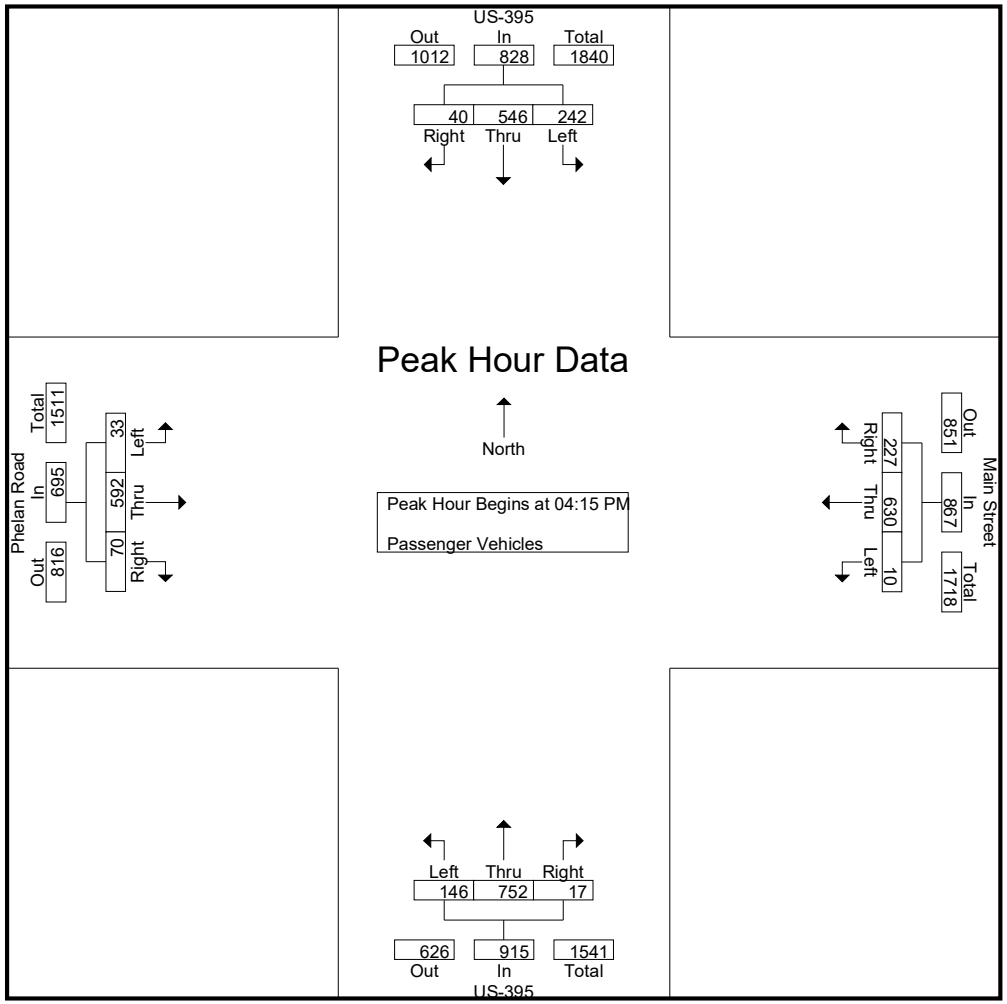

Counts Unlimited, Inc.
PO Box 1178
Corona, CA 92878
(951)268-6268

City of Victorville
N/S: US-395
E/W: Phelan Road/Main Street
Weather: Clear

File Name : 03_VIC_395_Phelan PM
Site Code : 05122132
Start Date : 2/16/2022
Page No : 3

	US-395 Southbound				Main Street Westbound				US-395 Northbound				Phelan Road Eastbound				
Start Time	Left	Thru	Right	App. Total	Left	Thru	Right	App. Total	Left	Thru	Right	App. Total	Left	Thru	Right	App. Total	Int. Total
Peak Hour Analysis From 04:15 PM to 05:00 PM - Peak 1 of 1																	
Peak Hour for Each Approach Begins at:																	
	04:15 PM				04:15 PM				04:15 PM				04:15 PM				
+0 mins.	**71**	124	9	204	1	**176**	51	**228**	36	175	1	212	8	**171**	18	**197**	
+15 mins.	57	**171**	9	**237**	**4**	151	51	206	26	**208**	**6**	**240**	6	120	12	138	
+30 mins.	52	125	9	186	3	154	54	211	32	202	5	239	9	154	**21**	184	
+45 mins.	62	126	**13**	201	2	149	**71**	222	**52**	167	5	224	**10**	147	19	176	
Total Volume	242	546	40	828	10	630	227	867	146	752	17	915	33	592	70	695	
% App. Total	29.2	65.9	4.8		1.2	72.7	26.2		16	82.2	1.9		4.7	85.2	10.1		
PHF	.852	.798	.769	.873	.625	.895	.799	.951	.702	.904	.708	.953	.825	.865	.833	.882	

Counts Unlimited, Inc.
PO Box 1178
Corona, CA 92878
(951)268-6268

City of Victorville
N/S: US-395
E/W: Phelan Road/Main Street
Weather: Clear

File Name : 03_VIC_395_Phelan PM
Site Code : 05122132
Start Date : 2/16/2022
Page No : 1

Groups Printed- Large 2 Axle Vehicles

	US-395 Southbound					Main Street Westbound					US-395 Northbound					Phelan Road Eastbound							
Start Time	Left	Thru	Right	RTOR	App. Total	Left	Thru	Right	RTOR	App. Total	Left	Thru	Right	RTOR	App. Total	Left	Thru	Right	RTOR	App. Total	Exclu. Total	Inclu. Total	Int. Total
04:00 PM	0	5	0	0	5	0	0	0	0	0	0	2	0	0	2	0	1	1	1	2	1	9	10
04:15 PM	0	3	0	0	3	0	2	1	0	3	2	5	0	0	7	1	5	1	1	7	1	20	21
04:30 PM	1	3	0	0	4	0	3	0	0	3	2	2	2	0	6	0	2	0	0	2	0	15	15
04:45 PM	0	5	1	1	6	0	2	1	0	3	1	6	0	0	7	0	4	0	0	4	1	20	21
Total	1	16	1	1	18	0	7	2	0	9	5	15	2	0	22	1	12	2	2	15	3	64	67
05:00 PM	0	2	0	0	2	0	3	1	0	4	0	6	0	0	6	0	1	0	0	1	0	13	13
05:15 PM	1	5	0	0	6	0	0	0	0	0	1	3	0	0	4	0	3	0	0	3	0	13	13
05:30 PM	0	7	0	0	7	0	0	0	0	0	4	3	0	0	7	0	0	0	0	0	0	14	14
05:45 PM	1	3	0	0	4	0	6	1	0	7	0	4	0	0	4	0	2	0	0	2	0	17	17
Total	2	17	0	0	19	0	9	2	0	11	5	16	0	0	21	0	6	0	0	6	0	57	57
Grand Total	3	33	1	1	37	0	16	4	0	20	10	31	2	0	43	1	18	2	2	21	3	121	124
Apprch %	8.1	89.2	2.7			0	80	20			23.3	72.1	4.7			4.8	85.7	9.5					
Total %	2.5	27.3	0.8		30.6	0	13.2	3.3		16.5	8.3	25.6	1.7		35.5	0.8	14.9	1.7		17.4	2.4	97.6	

	US-395 Southbound				Main Street Westbound				US-395 Northbound				Phelan Road Eastbound				
Start Time	Left	Thru	Right	App. Total	Left	Thru	Right	App. Total	Left	Thru	Right	App. Total	Left	Thru	Right	App. Total	Int. Total
Peak Hour Analysis From 04:15 PM to 05:00 PM - Peak 1 of 1																	
Peak Hour for Entire Intersection Begins at 04:15 PM																	
04:15 PM	0	3	0	3	0	2	**1**	3	**2**	5	0	**7**	**1**	**5**	**1**	**7**	**20**
04:30 PM	**1**	3	0	4	0	**3**	0	3	2	2	**2**	6	0	2	0	2	15
04:45 PM	0	**5**	**1**	**6**	0	2	1	3	1	**6**	0	7	0	4	0	4	20
05:00 PM	0	2	0	2	0	3	1	**4**	0	6	0	6	0	1	0	1	13
Total Volume	1	13	1	15	0	10	3	13	5	19	2	26	1	12	1	14	68
% App. Total	6.7	86.7	6.7		0	76.9	23.1		19.2	73.1	7.7		7.1	85.7	7.1		
PHF	.250	.650	.250	.625	.000	.833	.750	.813	.625	.792	.250	.929	.250	.600	.250	.500	.850

Counts Unlimited, Inc.
PO Box 1178
Corona, CA 92878
(951)268-6268

City of Victorville
N/S: US-395
E/W: Phelan Road/Main Street
Weather: Clear

File Name : 03_VIC_395_Phelan PM
Site Code : 05122132
Start Date : 2/16/2022
Page No : 2

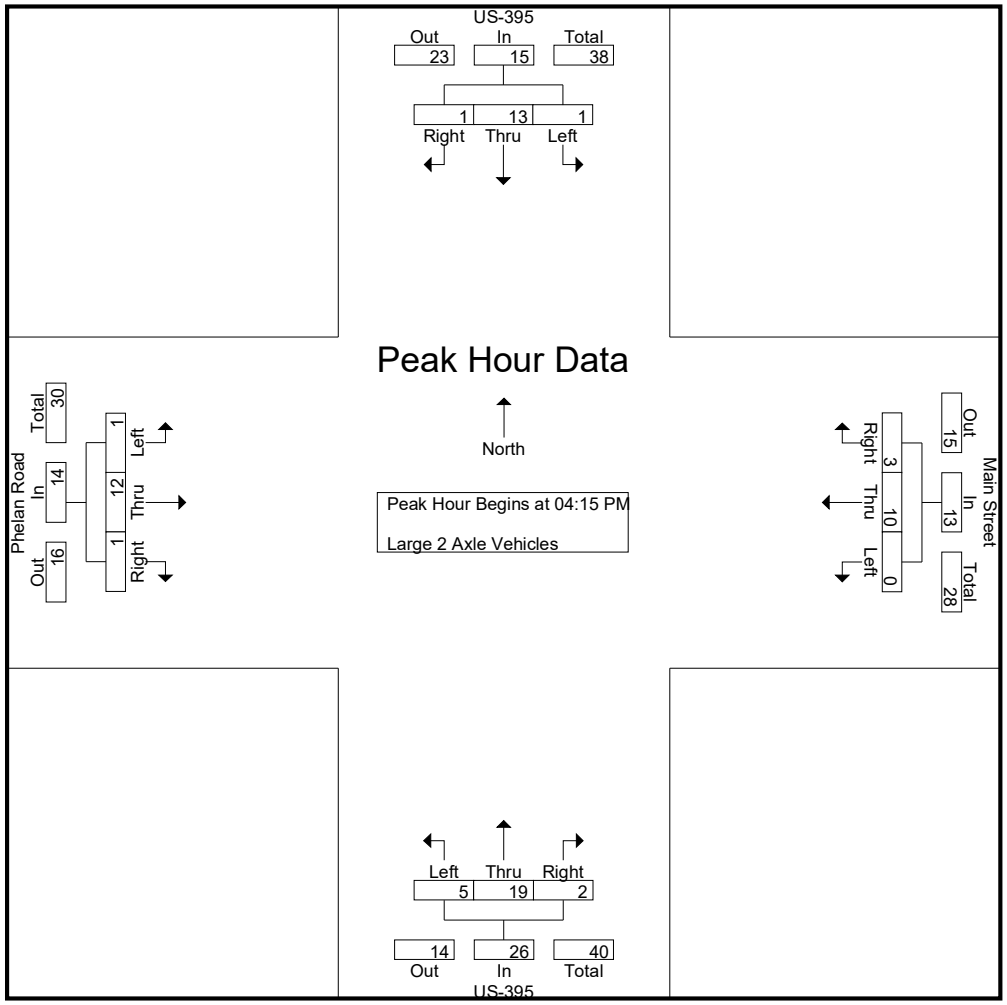

Counts Unlimited, Inc.
PO Box 1178
Corona, CA 92878
(951)268-6268

City of Victorville
N/S: US-395
E/W: Phelan Road/Main Street
Weather: Clear

File Name : 03_VIC_395_Phelan PM
Site Code : 05122132
Start Date : 2/16/2022
Page No : 3

	US-395 Southbound				Main Street Westbound				US-395 Northbound				Phelan Road Eastbound				
Start Time	Left	Thru	Right	App. Total	Left	Thru	Right	App. Total	Left	Thru	Right	App. Total	Left	Thru	Right	App. Total	Int. Total
Peak Hour Analysis From 04:15 PM to 05:00 PM - Peak 1 of 1																	
Peak Hour for Each Approach Begins at:																	
	04:15 PM				04:15 PM				04:15 PM				04:15 PM				
+0 mins.	0	3	0	3	0	2	**1**	3	**2**	5	0	**7**	**1**	**5**	**1**	**7**	
+15 mins.	**1**	3	0	4	0	**3**	0	3	2	2	**2**	6	0	2	0	2	
+30 mins.	0	**5**	**1**	**6**	0	2	1	3	1	**6**	0	7	0	4	0	4	
+45 mins.	0	2	0	2	0	3	1	**4**	0	6	0	6	0	1	0	1	
Total Volume	1	13	1	15	0	10	3	13	5	19	2	26	1	12	1	14	
% App. Total	6.7	86.7	6.7		0	76.9	23.1		19.2	73.1	7.7		7.1	85.7	7.1		
PHF	.250	.650	.250	.625	.000	.833	.750	.813	.625	.792	.250	.929	.250	.600	.250	.500	

Counts Unlimited, Inc.
PO Box 1178
Corona, CA 92878
(951)268-6268

City of Victorville
N/S: US-395
E/W: Phelan Road/Main Street
Weather: Clear

File Name : 03_VIC_395_Phelan PM
Site Code : 05122132
Start Date : 2/16/2022
Page No : 1

Groups Printed- 3 Axle Vehicles

	US-395 Southbound					Main Street Westbound					US-395 Northbound					Phelan Road Eastbound							
Start Time	Left	Thru	Right	RTOR	App. Total	Left	Thru	Right	RTOR	App. Total	Left	Thru	Right	RTOR	App. Total	Left	Thru	Right	RTOR	App. Total	Exclu. Total	Inclu. Total	Int. Total
04:00 PM	0	3	0	0	3	0	1	0	0	1	1	1	0	0	2	0	0	0	0	0	0	6	6
04:15 PM	0	1	0	0	1	0	0	0	0	0	2	2	0	0	4	0	0	0	0	0	0	5	5
04:30 PM	1	4	0	0	5	0	0	0	0	0	0	4	0	0	4	0	0	0	0	0	0	9	9
04:45 PM	0	0	0	0	0	0	0	0	0	0	0	2	0	0	2	0	1	0	0	1	0	3	3
Total	1	8	0	0	9	0	1	0	0	1	3	9	0	0	12	0	1	0	0	1	0	23	23
05:00 PM	0	2	0	0	2	0	0	0	0	0	0	0	0	0	0	1	0	0	0	1	0	3	3
05:15 PM	0	0	0	0	0	0	0	0	0	0	0	2	0	0	2	0	0	1	0	1	0	3	3
05:30 PM	0	1	0	0	1	0	0	0	0	0	0	0	0	0	0	0	0	1	0	1	0	2	2
05:45 PM	0	2	1	0	3	0	0	0	0	0	0	3	0	0	3	0	1	0	0	1	0	7	7
Total	0	5	1	0	6	0	0	0	0	0	0	5	0	0	5	1	1	2	0	4	0	15	15
Grand Total	1	13	1	0	15	0	1	0	0	1	3	14	0	0	17	1	2	2	0	5	0	38	38
Apprch %	6.7	86.7	6.7			0	100	0			17.6	82.4	0			20	40	40					
Total %	2.6	34.2	2.6		39.5	0	2.6	0		2.6	7.9	36.8	0		44.7	2.6	5.3	5.3		13.2	0	100	

	US-395 Southbound				Main Street Westbound				US-395 Northbound				Phelan Road Eastbound				
Start Time	Left	Thru	Right	App. Total	Left	Thru	Right	App. Total	Left	Thru	Right	App. Total	Left	Thru	Right	App. Total	Int. Total
Peak Hour Analysis From 04:15 PM to 05:00 PM - Peak 1 of 1																	
Peak Hour for Entire Intersection Begins at 04:15 PM																	
04:15 PM	0	1	0	1	0	0	0	0	**2**	2	0	**4**	0	0	0	0	5
04:30 PM	**1**	**4**	0	**5**	0	0	0	0	0	**4**	0	4	0	0	0	0	**9**
04:45 PM	0	0	0	0	0	0	0	0	0	2	0	2	0	**1**	0	**1**	3
05:00 PM	0	2	0	2	0	0	0	0	0	0	0	0	**1**	0	0	1	3
Total Volume	1	7	0	8	0	0	0	0	2	8	0	10	1	1	0	2	20
% App. Total	12.5	87.5	0		0	0	0		20	80	0		50	50	0		
PHF	.250	.438	.000	.400	.000	.000	.000	.000	.250	.500	.000	.625	.250	.250	.000	.500	.556

Counts Unlimited, Inc.
PO Box 1178
Corona, CA 92878
(951)268-6268

City of Victorville
N/S: US-395
E/W: Phelan Road/Main Street
Weather: Clear

File Name : 03_VIC_395_Phelan PM
Site Code : 05122132
Start Date : 2/16/2022
Page No : 2

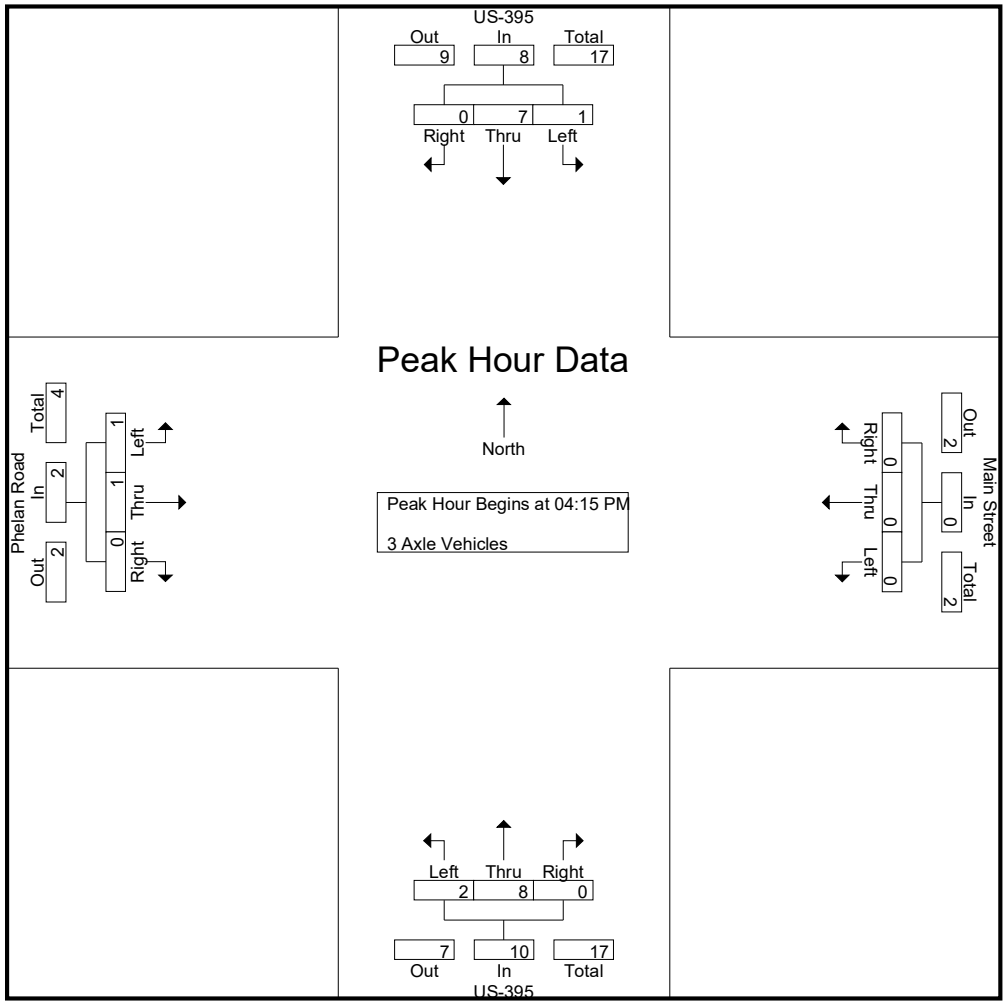

Counts Unlimited, Inc.
PO Box 1178
Corona, CA 92878
(951)268-6268

City of Victorville
N/S: US-395
E/W: Phelan Road/Main Street
Weather: Clear

File Name : 03_VIC_395_Phelan PM
Site Code : 05122132
Start Date : 2/16/2022
Page No : 3

	US-395 Southbound				Main Street Westbound				US-395 Northbound				Phelan Road Eastbound				
Start Time	Left	Thru	Right	App. Total	Left	Thru	Right	App. Total	Left	Thru	Right	App. Total	Left	Thru	Right	App. Total	Int. Total
Peak Hour Analysis From 04:15 PM to 05:00 PM - Peak 1 of 1																	
Peak Hour for Each Approach Begins at:																	
	04:15 PM				04:15 PM				04:15 PM				04:15 PM				
+0 mins.	0	1	0	1	0	0	0	0	**2**	2	0	**4**	0	0	0	0	
+15 mins.	**1**	**4**	0	**5**	0	0	0	0	0	**4**	0	4	0	0	0	0	
+30 mins.	0	0	0	0	0	0	0	0	0	2	0	2	0	**1**	0	**1**	
+45 mins.	0	2	0	2	0	0	0	0	0	0	0	0	**1**	0	0	1	
Total Volume	1	7	0	8	0	0	0	0	2	8	0	10	1	1	0	2	
% App. Total	12.5	87.5	0		0	0	0		20	80	0		50	50	0		
PHF	.250	.438	.000	.400	.000	.000	.000	.000	.250	.500	.000	.625	.250	.250	.000	.500	

Counts Unlimited, Inc.
PO Box 1178
Corona, CA 92878
(951)268-6268

City of Victorville
N/S: US-395
E/W: Phelan Road/Main Street
Weather: Clear

File Name : 03_VIC_395_Phelan PM
Site Code : 05122132
Start Date : 2/16/2022
Page No : 1

Groups Printed- 4+ Axle Trucks

	US-395 Southbound					Main Street Westbound					US-395 Northbound					Phelan Road Eastbound							
Start Time	Left	Thru	Right	RTOR	App. Total	Left	Thru	Right	RTOR	App. Total	Left	Thru	Right	RTOR	App. Total	Left	Thru	Right	RTOR	App. Total	Exclu. Total	Inclu. Total	Int. Total
04:00 PM	0	16	0	0	16	0	0	0	0	0	1	15	0	0	16	0	1	0	0	1	0	33	33
04:15 PM	1	14	0	0	15	1	0	0	0	1	0	8	0	0	8	0	0	0	0	0	0	24	24
04:30 PM	0	16	0	0	16	0	3	0	0	3	1	12	0	0	13	0	0	1	0	1	0	33	33
04:45 PM	0	12	0	0	12	0	0	1	0	1	1	11	0	0	12	0	1	0	0	1	0	26	26
Total	1	58	0	0	59	1	3	1	0	5	3	46	0	0	49	0	2	1	0	3	0	116	116
05:00 PM	3	15	0	0	18	0	1	0	0	1	0	13	0	0	13	1	1	1	0	3	0	35	35
05:15 PM	0	24	0	0	24	0	0	1	0	1	2	20	0	0	22	0	0	0	0	0	0	47	47
05:30 PM	0	18	0	0	18	0	1	1	0	2	0	9	2	0	11	0	1	0	0	1	0	32	32
05:45 PM	0	18	0	0	18	0	0	0	0	0	2	12	0	0	14	0	0	1	0	1	0	33	33
Total	3	75	0	0	78	0	2	2	0	4	4	54	2	0	60	1	2	2	0	5	0	147	147
Grand Total	4	133	0	0	137	1	5	3	0	9	7	100	2	0	109	1	4	3	0	8	0	263	263
Apprch %	2.9	97.1	0			11.1	55.6	33.3			6.4	91.7	1.8			12.5	50	37.5					
Total %	1.5	50.6	0		52.1	0.4	1.9	1.1		3.4	2.7	38	0.8		41.4	0.4	1.5	1.1		3	0	100	

	US-395 Southbound				Main Street Westbound				US-395 Northbound				Phelan Road Eastbound				
Start Time	Left	Thru	Right	App. Total	Left	Thru	Right	App. Total	Left	Thru	Right	App. Total	Left	Thru	Right	App. Total	Int. Total
Peak Hour Analysis From 04:15 PM to 05:00 PM - Peak 1 of 1																	
Peak Hour for Entire Intersection Begins at 04:15 PM																	
04:15 PM	1	14	0	15	**1**	0	0	1	0	8	0	8	0	0	0	0	24
04:30 PM	0	**16**	0	16	0	**3**	0	**3**	**1**	12	0	**13**	0	0	**1**	1	33
04:45 PM	0	12	0	12	0	0	**1**	1	1	11	0	12	0	**1**	0	1	26
05:00 PM	**3**	15	0	**18**	0	1	0	1	0	**13**	0	13	**1**	1	1	**3**	**35**
Total Volume	4	57	0	61	1	4	1	6	2	44	0	46	1	2	2	5	118
% App. Total	6.6	93.4	0		16.7	66.7	16.7		4.3	95.7	0		20	40	40		
PHF	.333	.891	.000	.847	.250	.333	.250	.500	.500	.846	.000	.885	.250	.500	.500	.417	.843

Counts Unlimited, Inc.
PO Box 1178
Corona, CA 92878
(951)268-6268

City of Victorville
N/S: US-395
E/W: Phelan Road/Main Street
Weather: Clear

File Name : 03_VIC_395_Phelan PM
Site Code : 05122132
Start Date : 2/16/2022
Page No : 2

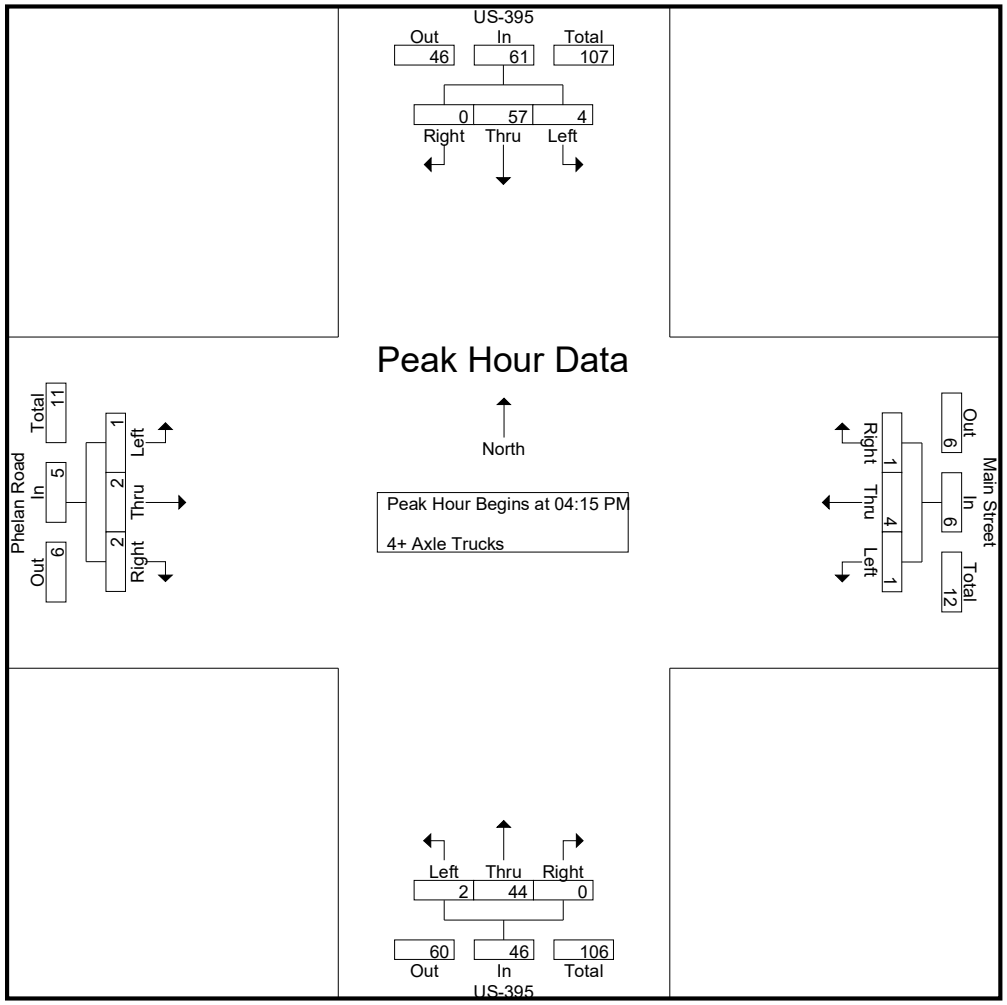

Counts Unlimited, Inc.
PO Box 1178
Corona, CA 92878
(951)268-6268

City of Victorville
N/S: US-395
E/W: Phelan Road/Main Street
Weather: Clear

File Name : 03_VIC_395_Phelan PM
Site Code : 05122132
Start Date : 2/16/2022
Page No : 3

	US-395 Southbound				Main Street Westbound				US-395 Northbound				Phelan Road Eastbound				
Start Time	Left	Thru	Right	App. Total	Left	Thru	Right	App. Total	Left	Thru	Right	App. Total	Left	Thru	Right	App. Total	Int. Total
Peak Hour Analysis From 04:15 PM to 05:00 PM - Peak 1 of 1																	
Peak Hour for Each Approach Begins at:																	
	04:15 PM				04:15 PM				04:15 PM				04:15 PM				
+0 mins.	1	14	0	15	**1**	0	0	1	0	8	0	8	0	0	0	0	
+15 mins.	0	**16**	0	16	0	**3**	0	**3**	**1**	12	0	**13**	0	0	**1**	1	
+30 mins.	0	12	0	12	0	0	**1**	1	1	11	0	12	0	**1**	0	1	
+45 mins.	**3**	15	0	**18**	0	1	0	1	0	**13**	0	13	**1**	1	1	**3**	
Total Volume	4	57	0	61	1	4	1	6	2	44	0	46	1	2	2	5	
% App. Total	6.6	93.4	0		16.7	66.7	16.7		4.3	95.7	0		20	40	40		
PHF	.333	.891	.000	.847	.250	.333	.250	.500	.500	.846	.000	.885	.250	.500	.500	.417	

Location: Victorville
N/S: US-395
E/W: Phelan Road/Main Street

Date: 4/12/2018
Day: Wednesday

PEDESTRIANS

	North Leg US-395	East Leg Main Street	South Leg US-395	West Leg Phelan Road	
	Pedestrians	Pedestrians	Pedestrians	Pedestrians	
7:00 AM	0	0	0	0	0
7:15 AM	0	0	0	0	0
7:30 AM	0	0	0	0	0
7:45 AM	0	0	0	0	0
8:00 AM	0	0	0	0	0
8:15 AM	0	0	0	0	0
8:30 AM	0	0	0	0	0
8:45 AM	0	0	0	0	0
TOTAL VOLUMES:	0	0	0	0	0

	North Leg US-395	East Leg Main Street	South Leg US-395	West Leg Phelan Road	
	Pedestrians	Pedestrians	Pedestrians	Pedestrians	
4:00 PM	0	0	0	0	0
4:15 PM	0	0	0	0	0
4:30 PM	0	0	0	0	0
4:45 PM	0	0	0	0	0
5:00 PM	0	0	0	0	0
5:15 PM	0	0	0	0	0
5:30 PM	0	0	0	0	0
5:45 PM	0	0	0	0	0
TOTAL VOLUMES:	0	0	0	0	0

Location: Victorville
N/S: US-395
E/W: Phelan Road/Main Street

Date: 4/12/2018
Day: Wednesday

BICYCLES

	Southbound US-395			Westbound Main Street			Northbound US-395			Eastbound Phelan Road			
	Left	Thru	Right	Left	Thru	Right	Left	Thru	Right	Left	Thru	Right	
7:00 AM	0	0	0	0	0	0	0	0	0	0	0	0	0
7:15 AM	0	0	0	0	0	0	0	0	0	0	0	0	0
7:30 AM	0	0	0	0	0	0	0	0	0	0	0	0	0
7:45 AM	0	0	0	0	0	0	0	0	0	0	0	0	0
8:00 AM	0	0	0	0	0	0	0	0	0	0	0	0	0
8:15 AM	0	0	0	0	0	0	0	0	0	0	0	0	0
8:30 AM	0	0	0	0	0	0	0	0	0	0	0	0	0
8:45 AM	0	0	0	0	0	0	0	0	0	0	0	0	0
TOTAL VOLUMES:	0	0	0	0	0	0	0	0	0	0	0	0	0

	Southbound US-395			Westbound Main Street			Northbound US-395			Eastbound Phelan Road			
	Left	Thru	Right	Left	Thru	Right	Left	Thru	Right	Left	Thru	Right	
4:00 PM	0	0	0	0	0	0	0	0	0	0	0	0	0
4:15 PM	0	0	0	0	0	0	0	0	0	0	0	0	0
4:30 PM	0	0	0	0	0	0	0	0	0	0	0	0	0
4:45 PM	0	0	0	0	0	0	0	0	0	0	0	0	0
5:00 PM	0	0	0	0	0	0	0	0	0	0	0	0	0
5:15 PM	0	0	0	0	0	0	0	0	0	0	0	0	0
5:30 PM	0	0	0	0	0	0	0	0	0	0	0	0	0
5:45 PM	0	0	0	0	0	0	0	0	0	0	0	0	0
TOTAL VOLUMES:	0	0	0	0	0	0	0	0	0	0	0	0	0

Counts Unlimited, Inc.
PO Box 1178
Corona, CA 92878
(951)268-6268

City of Victorville
N/S: US-395
E/W: Poplar Street
Weather: Clear

File Name : 04_VIC_395_Poplar AM
Site Code : 05122132
Start Date : 2/16/2022
Page No : 1

Groups Printed- Passenger Vehicles - Large 2 Axle Vehicles - 3 Axle Vehicles - 4+ Axle Trucks

	US-395 Southbound			Poplar Street Westbound			US-395 Northbound			
Start Time	Left	Thru	App. Total	Left	Right	App. Total	Thru	Right	App. Total	Int. Total
07:00 AM	2	202	204	0	2	2	149	0	149	355
07:15 AM	4	205	209	0	1	1	146	2	148	358
07:30 AM	2	217	219	1	2	3	168	2	170	392
07:45 AM	12	219	231	0	0	0	126	2	128	359
Total	20	843	863	1	5	6	589	6	595	1464
08:00 AM	1	185	186	1	4	5	133	4	137	328
08:15 AM	4	232	236	2	4	6	115	4	119	361
08:30 AM	5	178	183	2	3	5	118	10	128	316
08:45 AM	7	179	186	1	6	7	105	4	109	302
Total	17	774	791	6	17	23	471	22	493	1307
Grand Total	37	1617	1654	7	22	29	1060	28	1088	2771
Apprch %	2.2	97.8		24.1	75.9		97.4	2.6		
Total %	1.3	58.4	59.7	0.3	0.8	1	38.3	1	39.3	
Passenger Vehicles	32	1411	1443	6	14	20	883	28	911	2374
% Passenger Vehicles	86.5	87.3	87.2	85.7	63.6	69	83.3	100	83.7	85.7
Large 2 Axle Vehicles	2	37	39	0	4	4	42	0	42	85
% Large 2 Axle Vehicles	5.4	2.3	2.4	0	18.2	13.8	4	0	3.9	3.1
3 Axle Vehicles	0	14	14	0	0	0	17	0	17	31
% 3 Axle Vehicles	0	0.9	0.8	0	0	0	1.6	0	1.6	1.1
4+ Axle Trucks	3	155	158	1	4	5	118	0	118	281
% 4+ Axle Trucks	8.1	9.6	9.6	14.3	18.2	17.2	11.1	0	10.8	10.1

	US-395 Southbound			Poplar Street Westbound			US-395 Northbound			
Start Time	Left	Thru	App. Total	Left	Right	App. Total	Thru	Right	App. Total	Int. Total
Peak Hour Analysis From 07:00 AM to 08:45 AM - Peak 1 of 1										
Peak Hour for Entire Intersection Begins at 07:00 AM										
07:00 AM	2	202	204	0	**2**	2	149	0	149	355
07:15 AM	4	205	209	0	1	1	146	**2**	148	358
07:30 AM	2	217	219	**1**	2	**3**	**168**	2	**170**	**392**
07:45 AM	**12**	**219**	**231**	0	0	0	126	2	128	359
Total Volume	20	843	863	1	5	6	589	6	595	1464
% App. Total	2.3	97.7		16.7	83.3		99	1		
PHF	.417	.962	.934	.250	.625	.500	.876	.750	.875	.934

Counts Unlimited, Inc.
PO Box 1178
Corona, CA 92878
(951)268-6268

City of Victorville
N/S: US-395
E/W: Poplar Street
Weather: Clear

File Name : 04_VIC_395_Poplar AM
Site Code : 05122132
Start Date : 2/16/2022
Page No : 2

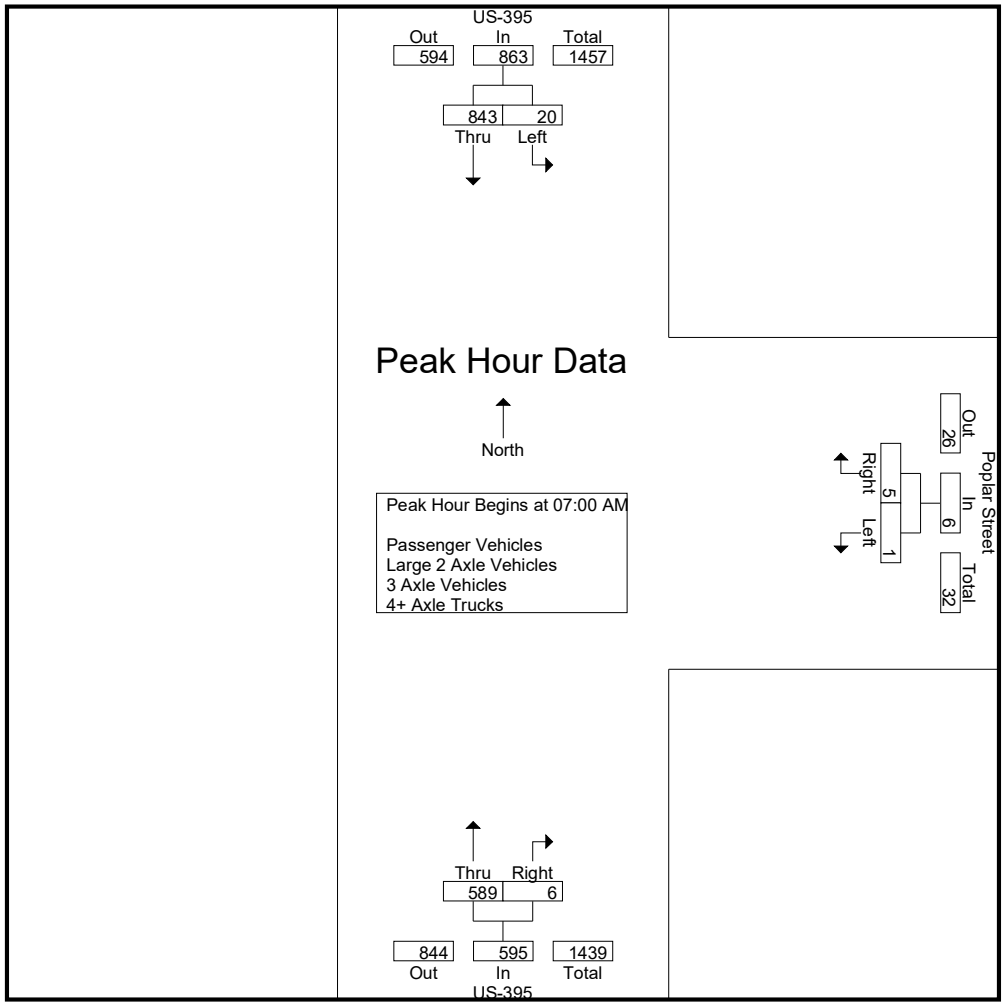

Peak Hour Analysis From 07:00 AM to 08:45 AM - Peak 1 of 1
Peak Hour for Each Approach Begins at:

	07:30 AM			08:00 AM			07:00 AM		
+0 mins.	2	217	219	1	4	5	149	0	149
+15 mins.	**12**	219	231	**2**	4	6	146	**2**	148
+30 mins.	1	185	186	2	3	5	**168**	2	**170**
+45 mins.	4	**232**	**236**	1	**6**	**7**	126	2	128
Total Volume	19	853	872	6	17	23	589	6	595
% App. Total	2.2	97.8		26.1	73.9		99	1	
PHF	.396	.919	.924	.750	.708	.821	.876	.750	.875

Counts Unlimited, Inc.
PO Box 1178
Corona, CA 92878
(951)268-6268

City of Victorville
N/S: US-395
E/W: Poplar Street
Weather: Clear

File Name : 04_VIC_395_Poplar AM
Site Code : 05122132
Start Date : 2/16/2022
Page No : 1

Groups Printed- Passenger Vehicles

	US-395 Southbound			Poplar Street Westbound			US-395 Northbound			
Start Time	Left	Thru	App. Total	Left	Right	App. Total	Thru	Right	App. Total	Int. Total
07:00 AM	2	185	187	0	0	0	123	0	123	310
07:15 AM	3	183	186	0	1	1	128	2	130	317
07:30 AM	2	182	184	1	1	2	140	2	142	328
07:45 AM	10	189	199	0	0	0	96	2	98	297
Total	17	739	756	1	2	3	487	6	493	1252
08:00 AM	1	154	155	1	2	3	117	4	121	279
08:15 AM	4	202	206	2	3	5	95	4	99	310
08:30 AM	3	162	165	1	2	3	97	10	107	275
08:45 AM	7	154	161	1	5	6	87	4	91	258
Total	15	672	687	5	12	17	396	22	418	1122
Grand Total	32	1411	1443	6	14	20	883	28	911	2374
Apprch %	2.2	97.8		30	70		96.9	3.1		
Total %	1.3	59.4	60.8	0.3	0.6	0.8	37.2	1.2	38.4	

	US-395 Southbound			Poplar Street Westbound			US-395 Northbound			
Start Time	Left	Thru	App. Total	Left	Right	App. Total	Thru	Right	App. Total	Int. Total
Peak Hour Analysis From 07:00 AM to 07:45 AM - Peak 1 of 1										
Peak Hour for Entire Intersection Begins at 07:00 AM										
07:00 AM	2	185	187	0	0	0	123	0	123	310
07:15 AM	3	183	186	0	**1**	1	128	**2**	130	317
07:30 AM	2	182	184	**1**	1	**2**	**140**	2	**142**	**328**
07:45 AM	**10**	**189**	**199**	0	0	0	96	2	98	297
Total Volume	17	739	756	1	2	3	487	6	493	1252
% App. Total	2.2	97.8		33.3	66.7		98.8	1.2		
PHF	.425	.978	.950	.250	.500	.375	.870	.750	.868	.954

Counts Unlimited, Inc.
PO Box 1178
Corona, CA 92878
(951)268-6268

City of Victorville
N/S: US-395
E/W: Poplar Street
Weather: Clear

File Name : 04_VIC_395_Poplar AM
Site Code : 05122132
Start Date : 2/16/2022
Page No : 2

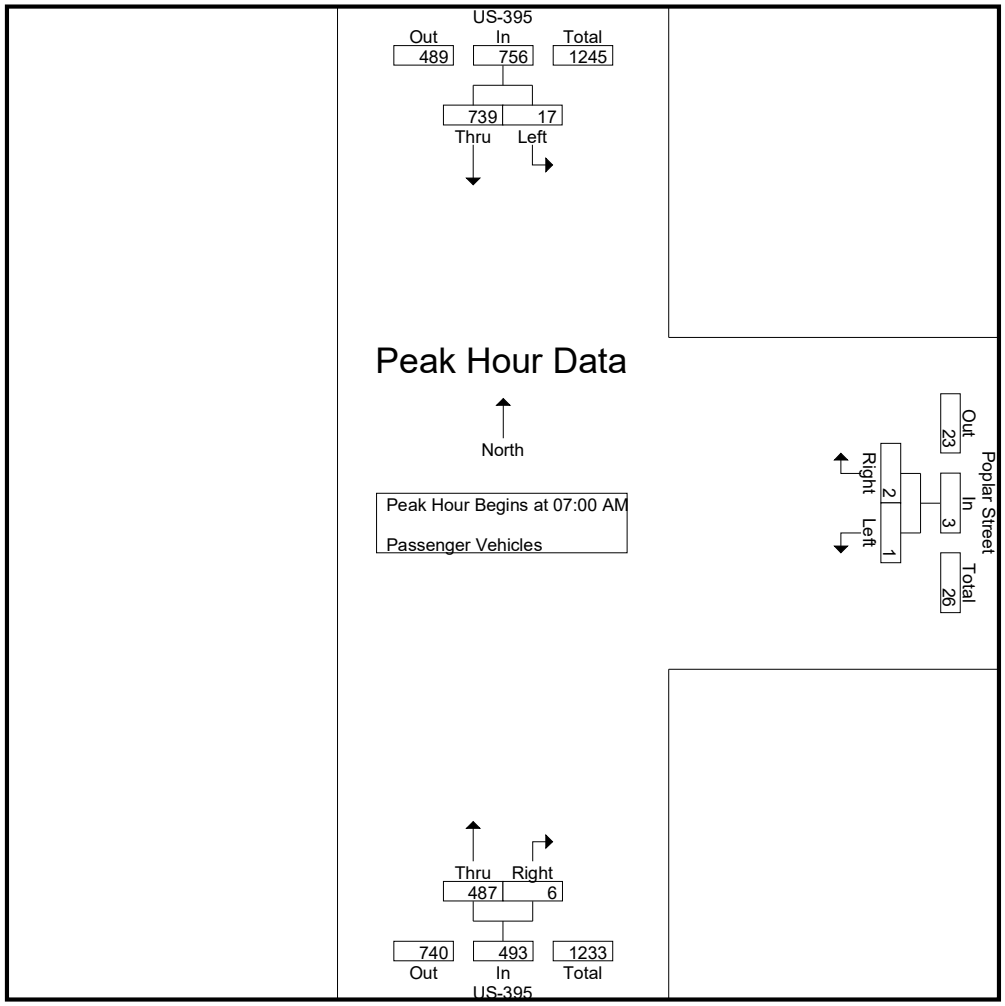

Peak Hour Analysis From 07:00 AM to 07:45 AM - Peak 1 of 1
Peak Hour for Each Approach Begins at:

	07:00 AM			07:00 AM			07:00 AM		
+0 mins.	2	185	187	0	0	0	123	0	123
+15 mins.	3	183	186	0	**1**	1	128	**2**	130
+30 mins.	2	182	184	**1**	1	**2**	**140**	2	**142**
+45 mins.	**10**	**189**	**199**	0	0	0	96	2	98
Total Volume	17	739	756	1	2	3	487	6	493
% App. Total	2.2	97.8		33.3	66.7		98.8	1.2	
PHF	.425	.978	.950	.250	.500	.375	.870	.750	.868

Counts Unlimited, Inc.
PO Box 1178
Corona, CA 92878
(951)268-6268

City of Victorville
N/S: US-395
E/W: Poplar Street
Weather: Clear

File Name : 04_VIC_395_Poplar AM
Site Code : 05122132
Start Date : 2/16/2022
Page No : 1

Groups Printed- Large 2 Axle Vehicles

	US-395 Southbound			Poplar Street Westbound			US-395 Northbound			
Start Time	Left	Thru	App. Total	Left	Right	App. Total	Thru	Right	App. Total	Int. Total
07:00 AM	0	2	2	0	0	0	9	0	9	11
07:15 AM	0	5	5	0	0	0	6	0	6	11
07:30 AM	0	9	9	0	0	0	6	0	6	15
07:45 AM	2	7	9	0	0	0	5	0	5	14
Total	2	23	25	0	0	0	26	0	26	51
08:00 AM	0	5	5	0	1	1	4	0	4	10
08:15 AM	0	3	3	0	1	1	4	0	4	8
08:30 AM	0	4	4	0	1	1	4	0	4	9
08:45 AM	0	2	2	0	1	1	4	0	4	7
Total	0	14	14	0	4	4	16	0	16	34
Grand Total	2	37	39	0	4	4	42	0	42	85
Apprch %	5.1	94.9		0	100		100	0		
Total %	2.4	43.5	45.9	0	4.7	4.7	49.4	0	49.4	

	US-395 Southbound			Poplar Street Westbound			US-395 Northbound			
Start Time	Left	Thru	App. Total	Left	Right	App. Total	Thru	Right	App. Total	Int. Total
Peak Hour Analysis From 07:00 AM to 07:45 AM - Peak 1 of 1										
Peak Hour for Entire Intersection Begins at 07:00 AM										
07:00 AM	0	2	2	0	0	0	**9**	0	**9**	11
07:15 AM	0	5	5	0	0	0	6	0	6	11
07:30 AM	0	**9**	**9**	0	0	0	6	0	6	**15**
07:45 AM	**2**	7	9	0	0	0	5	0	5	14
Total Volume	2	23	25	0	0	0	26	0	26	51
% App. Total	8	92		0	0		100	0		
PHF	.250	.639	.694	.000	.000	.000	.722	.000	.722	.850

Counts Unlimited, Inc.
PO Box 1178
Corona, CA 92878
(951)268-6268

City of Victorville
N/S: US-395
E/W: Poplar Street
Weather: Clear

File Name : 04_VIC_395_Poplar AM
Site Code : 05122132
Start Date : 2/16/2022
Page No : 2

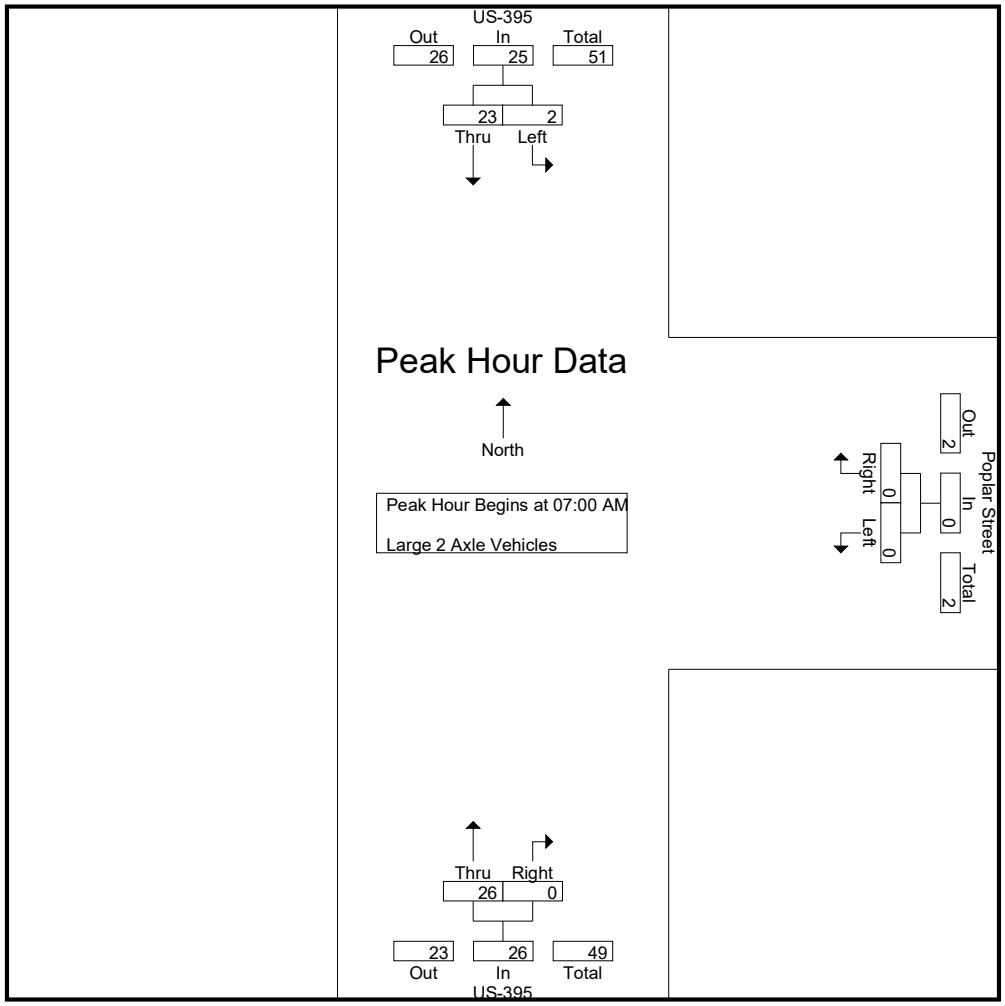

Peak Hour Analysis From 07:00 AM to 07:45 AM - Peak 1 of 1
Peak Hour for Each Approach Begins at:

	07:00 AM			07:00 AM			07:00 AM		
+0 mins.	0	2	2	0	0	0	**9**	0	**9**
+15 mins.	0	5	5	0	0	0	6	0	6
+30 mins.	0	**9**	**9**	0	0	0	6	0	6
+45 mins.	**2**	7	9	0	0	0	5	0	5
Total Volume	2	23	25	0	0	0	26	0	26
% App. Total	8	92		0	0		100	0	
PHF	.250	.639	.694	.000	.000	.000	.722	.000	.722

Counts Unlimited, Inc.
PO Box 1178
Corona, CA 92878
(951)268-6268

City of Victorville
N/S: US-395
E/W: Poplar Street
Weather: Clear

File Name : 04_VIC_395_Poplar AM
Site Code : 05122132
Start Date : 2/16/2022
Page No : 1

Groups Printed- 3 Axle Vehicles

	US-395 Southbound			Poplar Street Westbound			US-395 Northbound			
Start Time	Left	Thru	App. Total	Left	Right	App. Total	Thru	Right	App. Total	Int. Total
07:00 AM	0	0	0	0	0	0	5	0	5	5
07:15 AM	0	1	1	0	0	0	0	0	0	1
07:30 AM	0	2	2	0	0	0	2	0	2	4
07:45 AM	0	3	3	0	0	0	2	0	2	5
Total	0	6	6	0	0	0	9	0	9	15
08:00 AM	0	2	2	0	0	0	3	0	3	5
08:15 AM	0	3	3	0	0	0	2	0	2	5
08:30 AM	0	0	0	0	0	0	1	0	1	1
08:45 AM	0	3	3	0	0	0	2	0	2	5
Total	0	8	8	0	0	0	8	0	8	16
Grand Total	0	14	14	0	0	0	17	0	17	31
Apprch %	0	100		0	0		100	0		
Total %	0	45.2	45.2	0	0	0	54.8	0	54.8	

	US-395 Southbound			Poplar Street Westbound			US-395 Northbound			
Start Time	Left	Thru	App. Total	Left	Right	App. Total	Thru	Right	App. Total	Int. Total
Peak Hour Analysis From 07:00 AM to 07:45 AM - Peak 1 of 1										
Peak Hour for Entire Intersection Begins at 07:00 AM										
07:00 AM	0	0	0	0	0	0	**5**	0	**5**	**5**
07:15 AM	0	1	1	0	0	0	0	0	0	1
07:30 AM	0	2	2	0	0	0	2	0	2	4
07:45 AM	0	**3**	**3**	0	0	0	2	0	2	5
Total Volume	0	6	6	0	0	0	9	0	9	15
% App. Total	0	100		0	0		100	0		
PHF	.000	.500	.500	.000	.000	.000	.450	.000	.450	.750

Counts Unlimited, Inc.
PO Box 1178
Corona, CA 92878
(951)268-6268

City of Victorville
N/S: US-395
E/W: Poplar Street
Weather: Clear

File Name : 04_VIC_395_Poplar AM
Site Code : 05122132
Start Date : 2/16/2022
Page No : 2

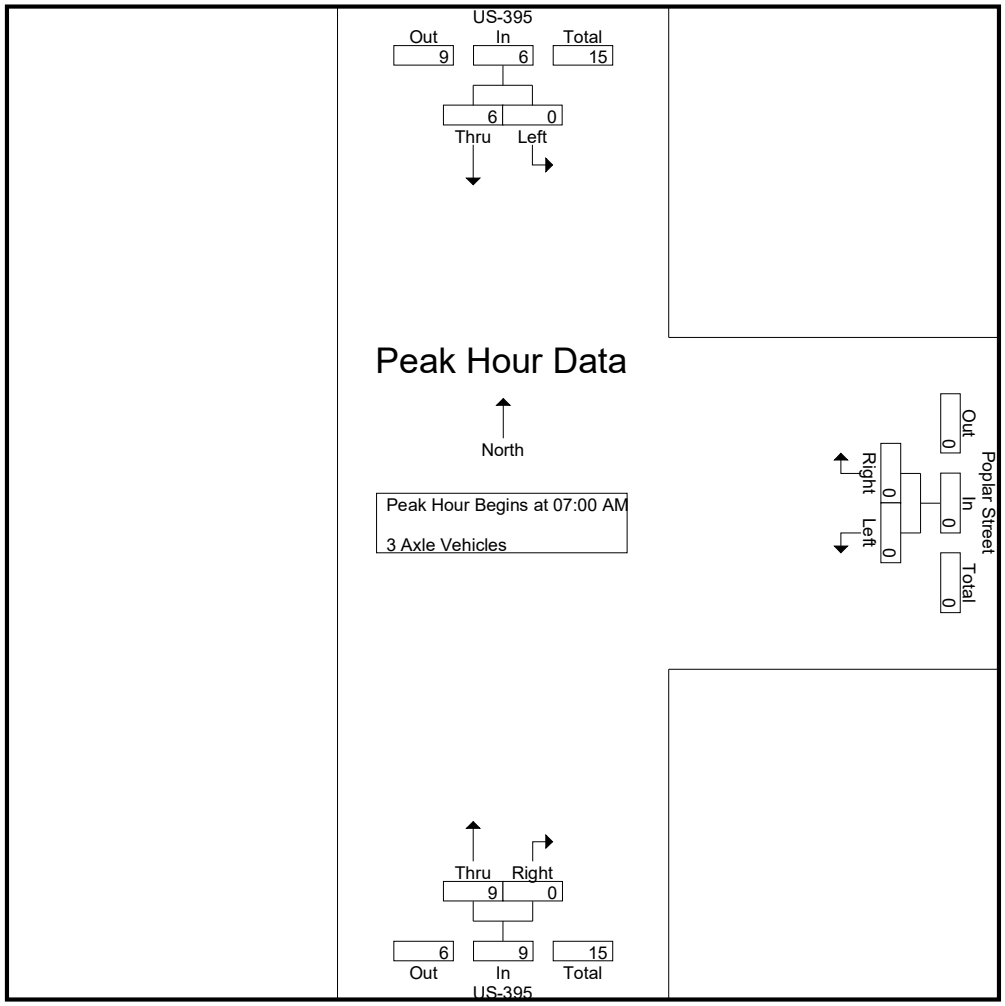

Peak Hour Analysis From 07:00 AM to 07:45 AM - Peak 1 of 1
Peak Hour for Each Approach Begins at:

	07:00 AM			07:00 AM			07:00 AM		
+0 mins.	0	0	0	0	0	0	**5**	0	**5**
+15 mins.	0	1	1	0	0	0	0	0	0
+30 mins.	0	2	2	0	0	0	2	0	2
+45 mins.	0	**3**	**3**	0	0	0	2	0	2
Total Volume	0	6	6	0	0	0	9	0	9
% App. Total	0	100		0	0		100	0	
PHF	.000	.500	.500	.000	.000	.000	.450	.000	.450

Counts Unlimited, Inc.
PO Box 1178
Corona, CA 92878
(951)268-6268

City of Victorville
N/S: US-395
E/W: Poplar Street
Weather: Clear

File Name : 04_VIC_395_Poplar AM
Site Code : 05122132
Start Date : 2/16/2022
Page No : 1

Groups Printed- 4+ Axle Trucks

	US-395 Southbound			Poplar Street Westbound			US-395 Northbound			
Start Time	Left	Thru	App. Total	Left	Right	App. Total	Thru	Right	App. Total	Int. Total
07:00 AM	0	15	15	0	2	2	12	0	12	29
07:15 AM	1	16	17	0	0	0	12	0	12	29
07:30 AM	0	24	24	0	1	1	20	0	20	45
07:45 AM	0	20	20	0	0	0	23	0	23	43
Total	1	75	76	0	3	3	67	0	67	146
08:00 AM	0	24	24	0	1	1	9	0	9	34
08:15 AM	0	24	24	0	0	0	14	0	14	38
08:30 AM	2	12	14	1	0	1	16	0	16	31
08:45 AM	0	20	20	0	0	0	12	0	12	32
Total	2	80	82	1	1	2	51	0	51	135
Grand Total	3	155	158	1	4	5	118	0	118	281
Apprch %	1.9	98.1		20	80		100	0		
Total %	1.1	55.2	56.2	0.4	1.4	1.8	42	0	42	

	US-395 Southbound			Poplar Street Westbound			US-395 Northbound			
Start Time	Left	Thru	App. Total	Left	Right	App. Total	Thru	Right	App. Total	Int. Total
Peak Hour Analysis From 07:00 AM to 07:45 AM - Peak 1 of 1										
Peak Hour for Entire Intersection Begins at 07:00 AM										
07:00 AM	0	15	15	0	**2**	**2**	12	0	12	29
07:15 AM	**1**	16	17	0	0	0	12	0	12	29
07:30 AM	0	**24**	**24**	0	1	1	20	0	20	**45**
07:45 AM	0	20	20	0	0	0	**23**	0	**23**	43
Total Volume	1	75	76	0	3	3	67	0	67	146
% App. Total	1.3	98.7		0	100		100	0		
PHF	.250	.781	.792	.000	.375	.375	.728	.000	.728	.811

Counts Unlimited, Inc.
PO Box 1178
Corona, CA 92878
(951)268-6268

City of Victorville
N/S: US-395
E/W: Poplar Street
Weather: Clear

File Name : 04_VIC_395_Poplar AM
Site Code : 05122132
Start Date : 2/16/2022
Page No : 2

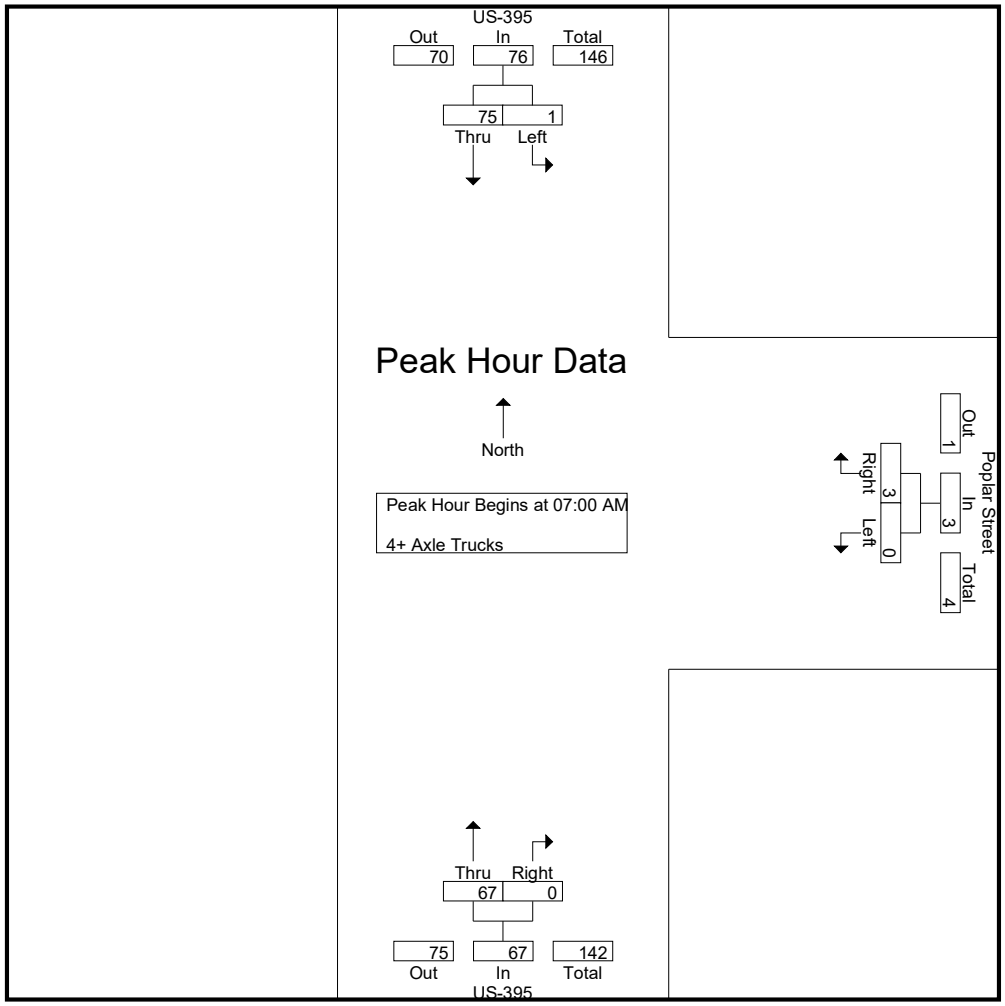

Peak Hour Analysis From 07:00 AM to 07:45 AM - Peak 1 of 1
Peak Hour for Each Approach Begins at:

	07:00 AM			07:00 AM			07:00 AM		
+0 mins.	0	15	15	0	**2**	**2**	12	0	12
+15 mins.	**1**	16	17	0	0	0	12	0	12
+30 mins.	0	**24**	**24**	0	1	1	20	0	20
+45 mins.	0	20	20	0	0	0	**23**	0	**23**
Total Volume	1	75	76	0	3	3	67	0	67
% App. Total	1.3	98.7		0	100		100	0	
PHF	.250	.781	.792	.000	.375	.375	.728	.000	.728

Counts Unlimited, Inc.
PO Box 1178
Corona, CA 92878
(951)268-6268

City of Victorville
N/S: US-395
E/W: Poplar Street
Weather: Clear

File Name : 04_VIC_395_Poplar PM
Site Code : 05122132
Start Date : 2/16/2022
Page No : 1

Groups Printed- Passenger Vehicles - Large 2 Axle Vehicles - 3 Axle Vehicles - 4+ Axle Trucks

	US-395 Southbound			Poplar Street Westbound			US-395 Northbound			
Start Time	Left	Thru	App. Total	Left	Right	App. Total	Thru	Right	App. Total	Int. Total
04:00 PM	9	178	187	2	4	6	253	10	263	456
04:15 PM	4	180	184	1	4	5	238	11	249	438
04:30 PM	6	192	198	0	7	7	257	6	263	468
04:45 PM	5	169	174	0	9	9	271	10	281	464
Total	24	719	743	3	24	27	1019	37	1056	1826
05:00 PM	3	181	184	2	7	9	215	7	222	415
05:15 PM	5	192	197	3	4	7	264	11	275	479
05:30 PM	5	180	185	3	6	9	281	21	302	496
05:45 PM	2	140	142	1	0	1	266	22	288	431
Total	15	693	708	9	17	26	1026	61	1087	1821
Grand Total	39	1412	1451	12	41	53	2045	98	2143	3647
Apprch %	2.7	97.3		22.6	77.4		95.4	4.6		
Total %	1.1	38.7	39.8	0.3	1.1	1.5	56.1	2.7	58.8	
Passenger Vehicles	30	1221	1251	10	38	48	1878	95	1973	3272
% Passenger Vehicles	76.9	86.5	86.2	83.3	92.7	90.6	91.8	96.9	92.1	89.7
Large 2 Axle Vehicles	1	46	47	0	1	1	56	2	58	106
% Large 2 Axle Vehicles	2.6	3.3	3.2	0	2.4	1.9	2.7	2	2.7	2.9
3 Axle Vehicles	2	10	12	0	1	1	17	0	17	30
% 3 Axle Vehicles	5.1	0.7	0.8	0	2.4	1.9	0.8	0	0.8	0.8
4+ Axle Trucks	6	135	141	2	1	3	94	1	95	239
% 4+ Axle Trucks	15.4	9.6	9.7	16.7	2.4	5.7	4.6	1	4.4	6.6

	US-395 Southbound			Poplar Street Westbound			US-395 Northbound			
Start Time	Left	Thru	App. Total	Left	Right	App. Total	Thru	Right	App. Total	Int. Total
Peak Hour Analysis From 04:00 PM to 05:45 PM - Peak 1 of 1										
Peak Hour for Entire Intersection Begins at 04:45 PM										
04:45 PM	**5**	169	174	0	**9**	**9**	271	10	281	464
05:00 PM	3	181	184	2	7	9	215	7	222	415
05:15 PM	5	**192**	**197**	**3**	4	7	264	11	275	479
05:30 PM	5	180	185	3	6	9	**281**	**21**	**302**	**496**
Total Volume	18	722	740	8	26	34	1031	49	1080	1854
% App. Total	2.4	97.6		23.5	76.5		95.5	4.5		
PHF	.900	.940	.939	.667	.722	.944	.917	.583	.894	.934

Counts Unlimited, Inc.
PO Box 1178
Corona, CA 92878
(951)268-6268

City of Victorville
N/S: US-395
E/W: Poplar Street
Weather: Clear

File Name : 04_VIC_395_Poplar PM
Site Code : 05122132
Start Date : 2/16/2022
Page No : 2

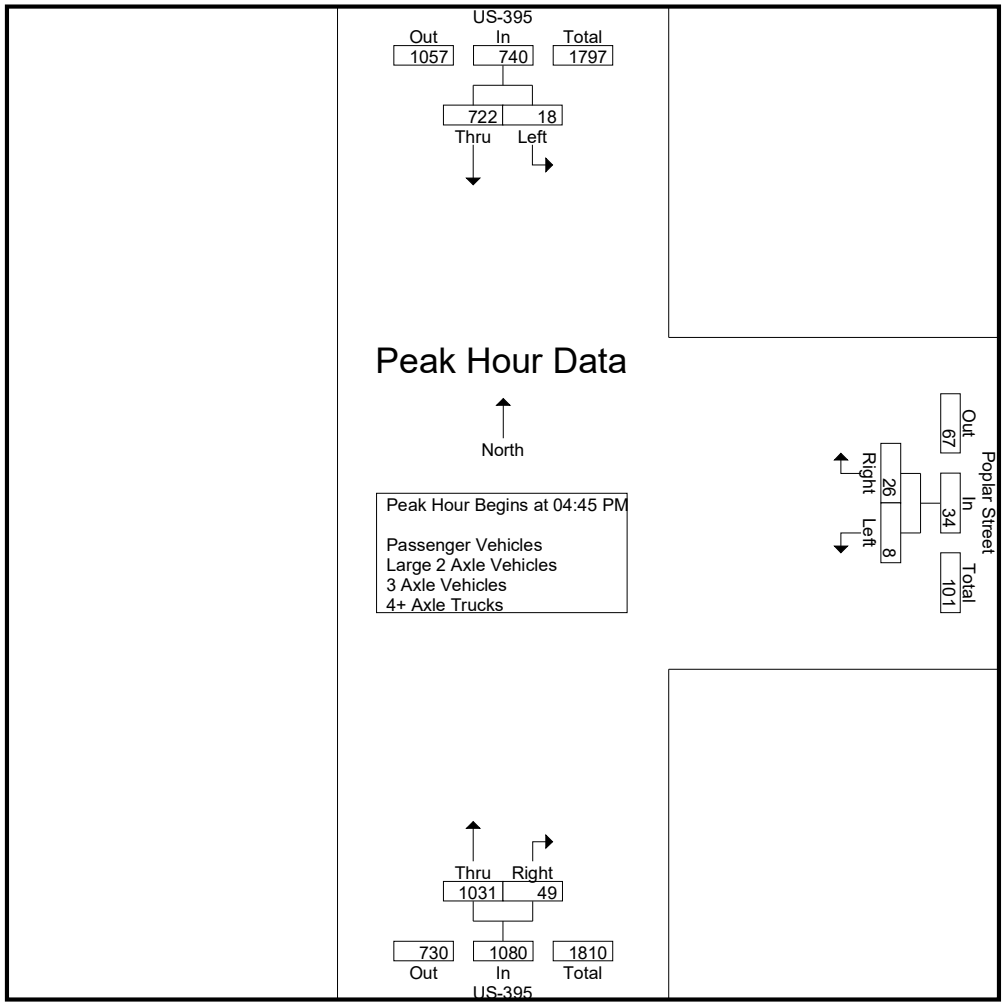

Peak Hour Analysis From 04:00 PM to 05:45 PM - Peak 1 of 1
Peak Hour for Each Approach Begins at:

	04:30 PM			04:45 PM			05:00 PM		
+0 mins.	**6**	**192**	**198**	0	**9**	**9**	215	7	222
+15 mins.	5	169	174	2	7	9	264	11	275
+30 mins.	3	181	184	**3**	4	7	**281**	21	**302**
+45 mins.	5	192	197	3	6	9	266	**22**	288
Total Volume	19	734	753	8	26	34	1026	61	1087
% App. Total	2.5	97.5		23.5	76.5		94.4	5.6	
PHF	.792	.956	.951	.667	.722	.944	.913	.693	.900

Counts Unlimited, Inc.
PO Box 1178
Corona, CA 92878
(951)268-6268

City of Victorville
N/S: US-395
E/W: Poplar Street
Weather: Clear

File Name : 04_VIC_395_Poplar PM
Site Code : 05122132
Start Date : 2/16/2022
Page No : 1

Groups Printed- Passenger Vehicles

	US-395 Southbound			Poplar Street Westbound			US-395 Northbound			
Start Time	Left	Thru	App. Total	Left	Right	App. Total	Thru	Right	App. Total	Int. Total
04:00 PM	7	160	167	1	3	4	233	10	243	414
04:15 PM	3	155	158	1	4	5	222	11	233	396
04:30 PM	4	169	173	0	6	6	230	6	236	415
04:45 PM	5	146	151	0	9	9	249	10	259	419
Total	19	630	649	2	22	24	934	37	971	1644
05:00 PM	3	157	160	2	6	8	199	7	206	374
05:15 PM	5	164	169	3	4	7	236	10	246	422
05:30 PM	2	154	156	2	6	8	259	20	279	443
05:45 PM	1	116	117	1	0	1	250	21	271	389
Total	11	591	602	8	16	24	944	58	1002	1628
Grand Total	30	1221	1251	10	38	48	1878	95	1973	3272
Apprch %	2.4	97.6		20.8	79.2		95.2	4.8		
Total %	0.9	37.3	38.2	0.3	1.2	1.5	57.4	2.9	60.3	

	US-395 Southbound			Poplar Street Westbound			US-395 Northbound			
Start Time	Left	Thru	App. Total	Left	Right	App. Total	Thru	Right	App. Total	Int. Total
Peak Hour Analysis From 04:45 PM to 05:30 PM - Peak 1 of 1										
Peak Hour for Entire Intersection Begins at 04:45 PM										
04:45 PM	**5**	146	151	0	**9**	**9**	249	10	259	419
05:00 PM	3	157	160	2	6	8	199	7	206	374
05:15 PM	5	**164**	**169**	**3**	4	7	236	10	246	422
05:30 PM	2	154	156	2	6	8	**259**	**20**	**279**	**443**
Total Volume	15	621	636	7	25	32	943	47	990	1658
% App. Total	2.4	97.6		21.9	78.1		95.3	4.7		
PHF	.750	.947	.941	.583	.694	.889	.910	.588	.887	.936

Counts Unlimited, Inc.
PO Box 1178
Corona, CA 92878
(951)268-6268

City of Victorville
N/S: US-395
E/W: Poplar Street
Weather: Clear

File Name : 04_VIC_395_Poplar PM
Site Code : 05122132
Start Date : 2/16/2022
Page No : 2

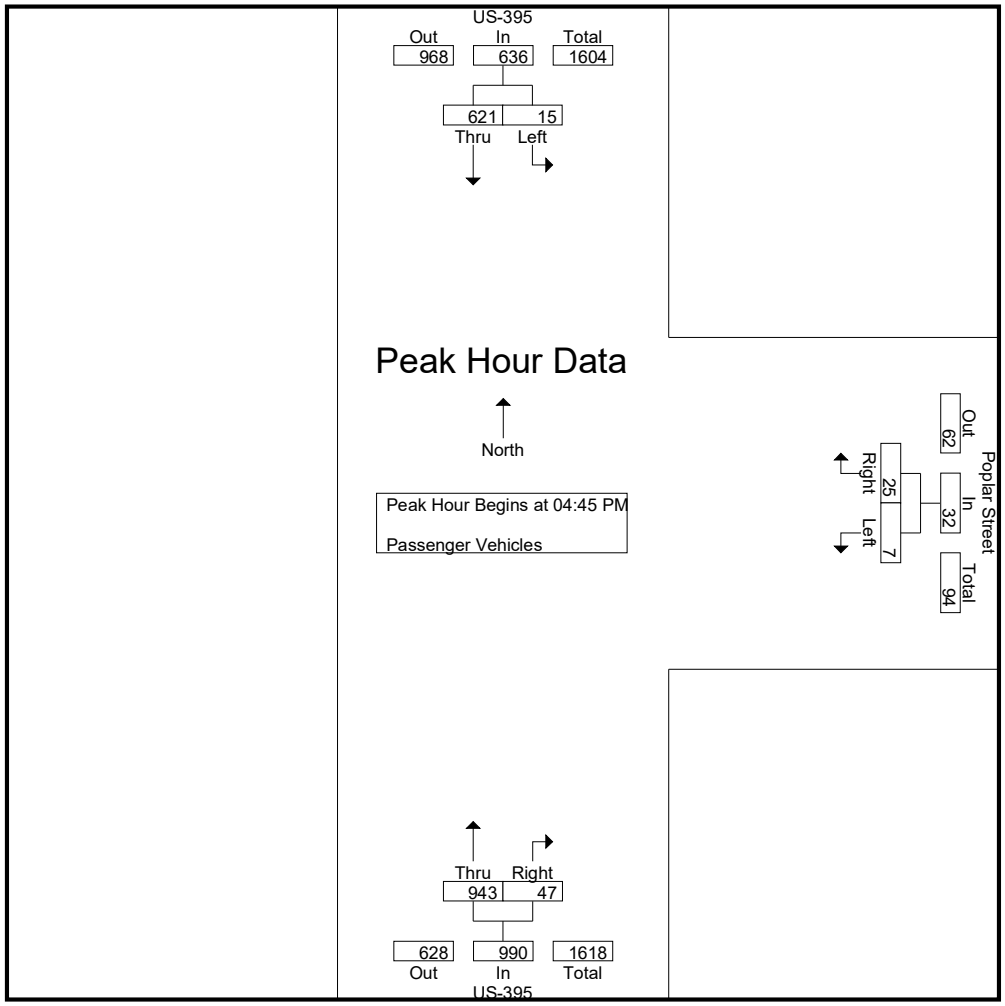

Peak Hour Analysis From 04:45 PM to 05:30 PM - Peak 1 of 1
Peak Hour for Each Approach Begins at:

	04:45 PM			04:45 PM			04:45 PM		
+0 mins.	**5**	146	151	0	**9**	**9**	249	10	259
+15 mins.	3	157	160	2	6	8	199	7	206
+30 mins.	5	**164**	**169**	**3**	4	7	236	10	246
+45 mins.	2	154	156	2	6	8	**259**	**20**	**279**
Total Volume	15	621	636	7	25	32	943	47	990
% App. Total	2.4	97.6		21.9	78.1		95.3	4.7	
PHF	.750	.947	.941	.583	.694	.889	.910	.588	.887

Counts Unlimited, Inc.
PO Box 1178
Corona, CA 92878
(951)268-6268

City of Victorville
N/S: US-395
E/W: Poplar Street
Weather: Clear

File Name : 04_VIC_395_Poplar PM
Site Code : 05122132
Start Date : 2/16/2022
Page No : 1

Groups Printed- Large 2 Axle Vehicles

	US-395 Southbound			Poplar Street Westbound			US-395 Northbound			
Start Time	Left	Thru	App. Total	Left	Right	App. Total	Thru	Right	App. Total	Int. Total
04:00 PM	0	6	6	0	0	0	8	0	8	14
04:15 PM	0	5	5	0	0	0	6	0	6	11
04:30 PM	0	4	4	0	0	0	10	0	10	14
04:45 PM	0	11	11	0	0	0	10	0	10	21
Total	0	26	26	0	0	0	34	0	34	60
05:00 PM	0	5	5	0	1	1	8	0	8	14
05:15 PM	0	6	6	0	0	0	6	1	7	13
05:30 PM	1	6	7	0	0	0	6	1	7	14
05:45 PM	0	3	3	0	0	0	2	0	2	5
Total	1	20	21	0	1	1	22	2	24	46
Grand Total	1	46	47	0	1	1	56	2	58	106
Apprch %	2.1	97.9		0	100		96.6	3.4		
Total %	0.9	43.4	44.3	0	0.9	0.9	52.8	1.9	54.7	

	US-395 Southbound			Poplar Street Westbound			US-395 Northbound			
Start Time	Left	Thru	App. Total	Left	Right	App. Total	Thru	Right	App. Total	Int. Total
Peak Hour Analysis From 04:45 PM to 05:30 PM - Peak 1 of 1										
Peak Hour for Entire Intersection Begins at 04:45 PM										
04:45 PM	0	**11**	**11**	0	0	0	**10**	0	**10**	**21**
05:00 PM	0	5	5	0	**1**	**1**	8	0	8	14
05:15 PM	0	6	6	0	0	0	6	**1**	7	13
05:30 PM	**1**	6	7	0	0	0	6	1	7	14
Total Volume	1	28	29	0	1	1	30	2	32	62
% App. Total	3.4	96.6		0	100		93.8	6.2		
PHF	.250	.636	.659	.000	.250	.250	.750	.500	.800	.738

Counts Unlimited, Inc.
PO Box 1178
Corona, CA 92878
(951)268-6268

City of Victorville
N/S: US-395
E/W: Poplar Street
Weather: Clear

File Name : 04_VIC_395_Poplar PM
Site Code : 05122132
Start Date : 2/16/2022
Page No : 2

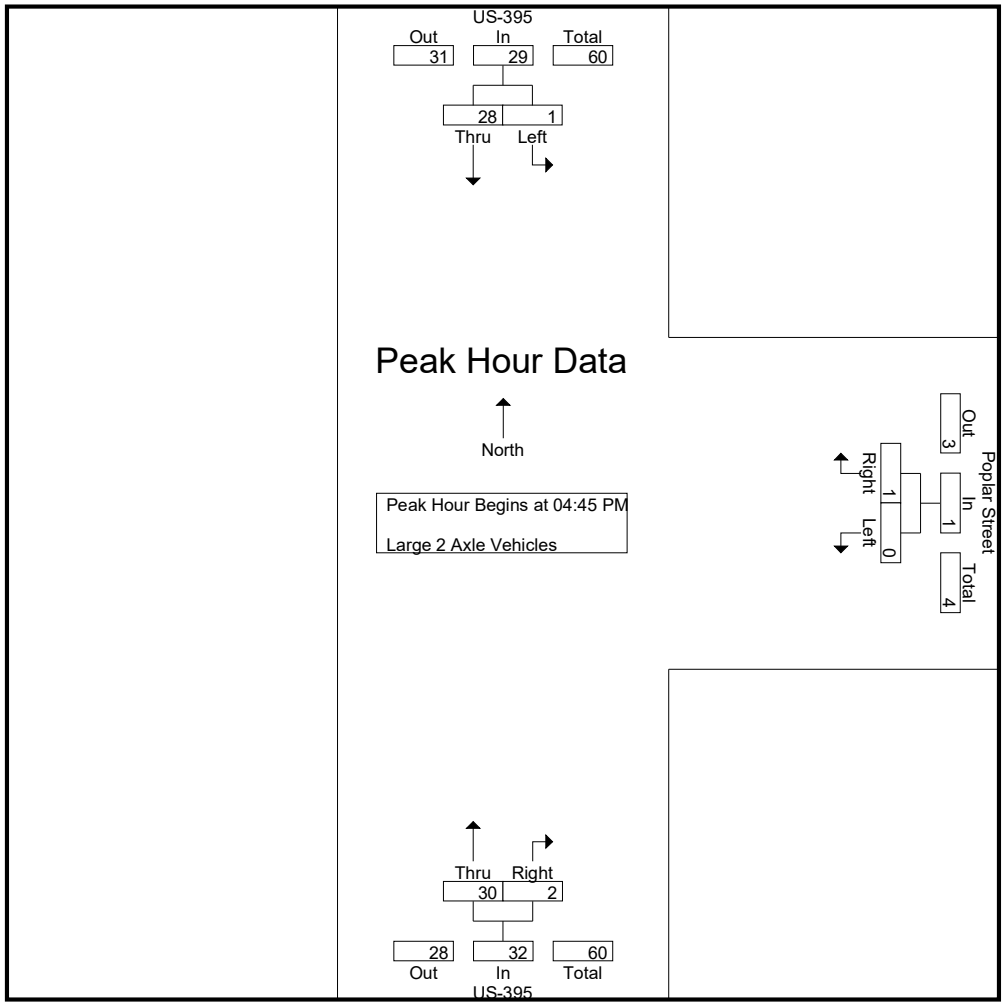

Peak Hour Analysis From 04:45 PM to 05:30 PM - Peak 1 of 1
Peak Hour for Each Approach Begins at:

	04:45 PM			04:45 PM			04:45 PM		
+0 mins.	0	**11**	**11**	0	0	0	**10**	0	**10**
+15 mins.	0	5	5	0	**1**	**1**	8	0	8
+30 mins.	0	6	6	0	0	0	6	**1**	7
+45 mins.	**1**	6	7	0	0	0	6	1	7
Total Volume	1	28	29	0	1	1	30	2	32
% App. Total	3.4	96.6		0	100		93.8	6.2	
PHF	.250	.636	.659	.000	.250	.250	.750	.500	.800

Counts Unlimited, Inc.
PO Box 1178
Corona, CA 92878
(951)268-6268

City of Victorville
N/S: US-395
E/W: Poplar Street
Weather: Clear

File Name : 04_VIC_395_Poplar PM
Site Code : 05122132
Start Date : 2/16/2022
Page No : 1

Groups Printed- 3 Axle Vehicles

	US-395 Southbound			Poplar Street Westbound			US-395 Northbound			
Start Time	Left	Thru	App. Total	Left	Right	App. Total	Thru	Right	App. Total	Int. Total
04:00 PM	1	2	3	0	0	0	2	0	2	5
04:15 PM	0	0	0	0	0	0	5	0	5	5
04:30 PM	0	3	3	0	1	1	3	0	3	7
04:45 PM	0	0	0	0	0	0	1	0	1	1
Total	1	5	6	0	1	1	11	0	11	18
05:00 PM	0	1	1	0	0	0	0	0	0	1
05:15 PM	0	1	1	0	0	0	2	0	2	3
05:30 PM	1	1	2	0	0	0	1	0	1	3
05:45 PM	0	2	2	0	0	0	3	0	3	5
Total	1	5	6	0	0	0	6	0	6	12
Grand Total	2	10	12	0	1	1	17	0	17	30
Apprch %	16.7	83.3		0	100		100	0		
Total %	6.7	33.3	40	0	3.3	3.3	56.7	0	56.7	

	US-395 Southbound			Poplar Street Westbound			US-395 Northbound			
Start Time	Left	Thru	App. Total	Left	Right	App. Total	Thru	Right	App. Total	Int. Total
Peak Hour Analysis From 04:45 PM to 05:30 PM - Peak 1 of 1										
Peak Hour for Entire Intersection Begins at 04:45 PM										
04:45 PM	0	0	0	0	0	0	1	0	1	1
05:00 PM	0	**1**	1	0	0	0	0	0	0	1
05:15 PM	0	1	1	0	0	0	**2**	0	**2**	**3**
05:30 PM	**1**	1	**2**	0	0	0	1	0	1	3
Total Volume	1	3	4	0	0	0	4	0	4	8
% App. Total	25	75		0	0		100	0		
PHF	.250	.750	.500	.000	.000	.000	.500	.000	.500	.667

Counts Unlimited, Inc.
PO Box 1178
Corona, CA 92878
(951)268-6268

City of Victorville
N/S: US-395
E/W: Poplar Street
Weather: Clear

File Name : 04_VIC_395_Poplar PM
Site Code : 05122132
Start Date : 2/16/2022
Page No : 2

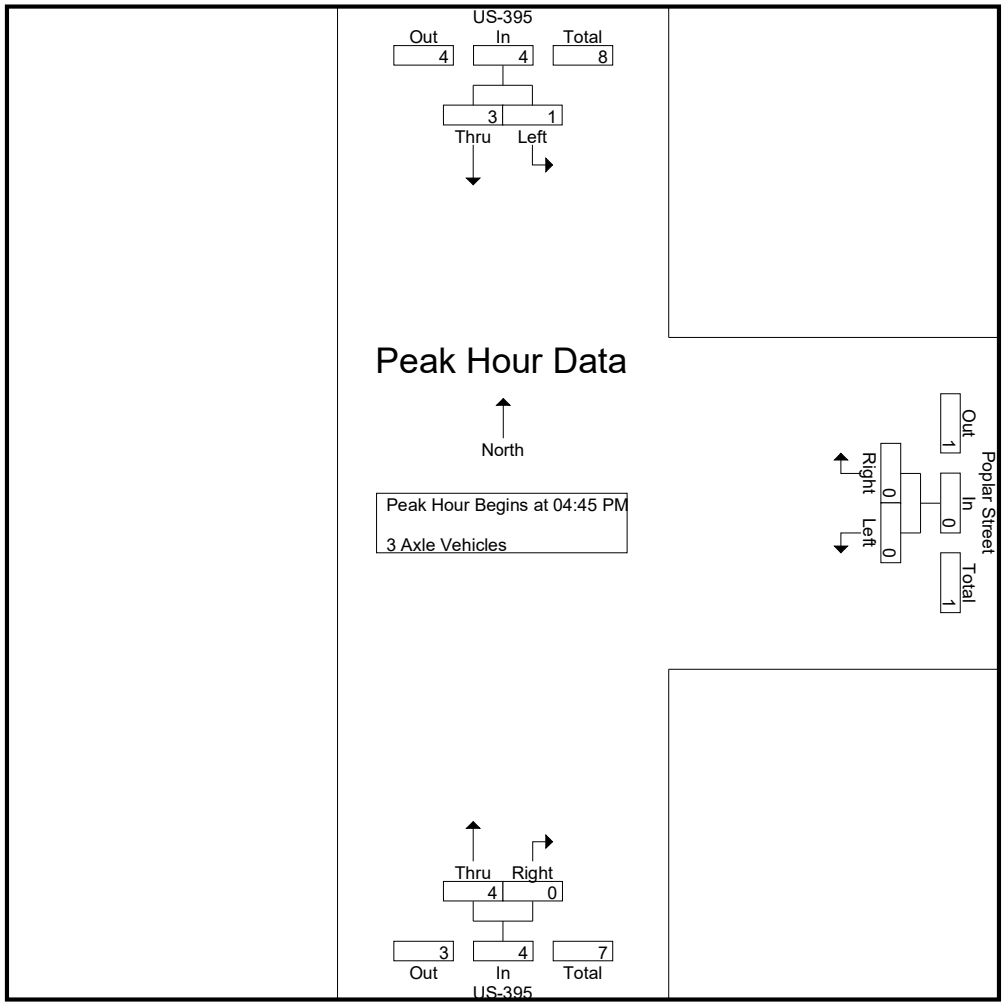

Peak Hour Analysis From 04:45 PM to 05:30 PM - Peak 1 of 1
Peak Hour for Each Approach Begins at:

	04:45 PM			04:45 PM			04:45 PM		
+0 mins.	0	0	0	0	0	0	1	0	1
+15 mins.	0	**1**	1	0	0	0	0	0	0
+30 mins.	0	1	1	0	0	0	**2**	0	**2**
+45 mins.	**1**	1	**2**	0	0	0	1	0	1
Total Volume	1	3	4	0	0	0	4	0	4
% App. Total	25	75		0	0		100	0	
PHF	.250	.750	.500	.000	.000	.000	.500	.000	.500

Counts Unlimited, Inc.
PO Box 1178
Corona, CA 92878
(951)268-6268

City of Victorville
N/S: US-395
E/W: Poplar Street
Weather: Clear

File Name : 04_VIC_395_Poplar PM
Site Code : 05122132
Start Date : 2/16/2022
Page No : 1

Groups Printed- 4+ Axle Trucks

	US-395 Southbound			Poplar Street Westbound			US-395 Northbound			
Start Time	Left	Thru	App. Total	Left	Right	App. Total	Thru	Right	App. Total	Int. Total
04:00 PM	1	10	11	1	1	2	10	0	10	23
04:15 PM	1	20	21	0	0	0	5	0	5	26
04:30 PM	2	16	18	0	0	0	14	0	14	32
04:45 PM	0	12	12	0	0	0	11	0	11	23
Total	4	58	62	1	1	2	40	0	40	104
05:00 PM	0	18	18	0	0	0	8	0	8	26
05:15 PM	0	21	21	0	0	0	20	0	20	41
05:30 PM	1	19	20	1	0	1	15	0	15	36
05:45 PM	1	19	20	0	0	0	11	1	12	32
Total	2	77	79	1	0	1	54	1	55	135
Grand Total	6	135	141	2	1	3	94	1	95	239
Apprch %	4.3	95.7		66.7	33.3		98.9	1.1		
Total %	2.5	56.5	59	0.8	0.4	1.3	39.3	0.4	39.7	

	US-395 Southbound			Poplar Street Westbound			US-395 Northbound			
Start Time	Left	Thru	App. Total	Left	Right	App. Total	Thru	Right	App. Total	Int. Total
Peak Hour Analysis From 04:45 PM to 05:30 PM - Peak 1 of 1										
Peak Hour for Entire Intersection Begins at 04:45 PM										
04:45 PM	0	12	12	0	0	0	11	0	11	23
05:00 PM	0	18	18	0	0	0	8	0	8	26
05:15 PM	0	**21**	**21**	0	0	0	**20**	0	**20**	**41**
05:30 PM	**1**	19	20	**1**	0	**1**	15	0	15	36
Total Volume	1	70	71	1	0	1	54	0	54	126
% App. Total	1.4	98.6		100	0		100	0		
PHF	.250	.833	.845	.250	.000	.250	.675	.000	.675	.768

Counts Unlimited, Inc.
PO Box 1178
Corona, CA 92878
(951)268-6268

City of Victorville
N/S: US-395
E/W: Poplar Street
Weather: Clear

File Name : 04_VIC_395_Poplar PM
Site Code : 05122132
Start Date : 2/16/2022
Page No : 2

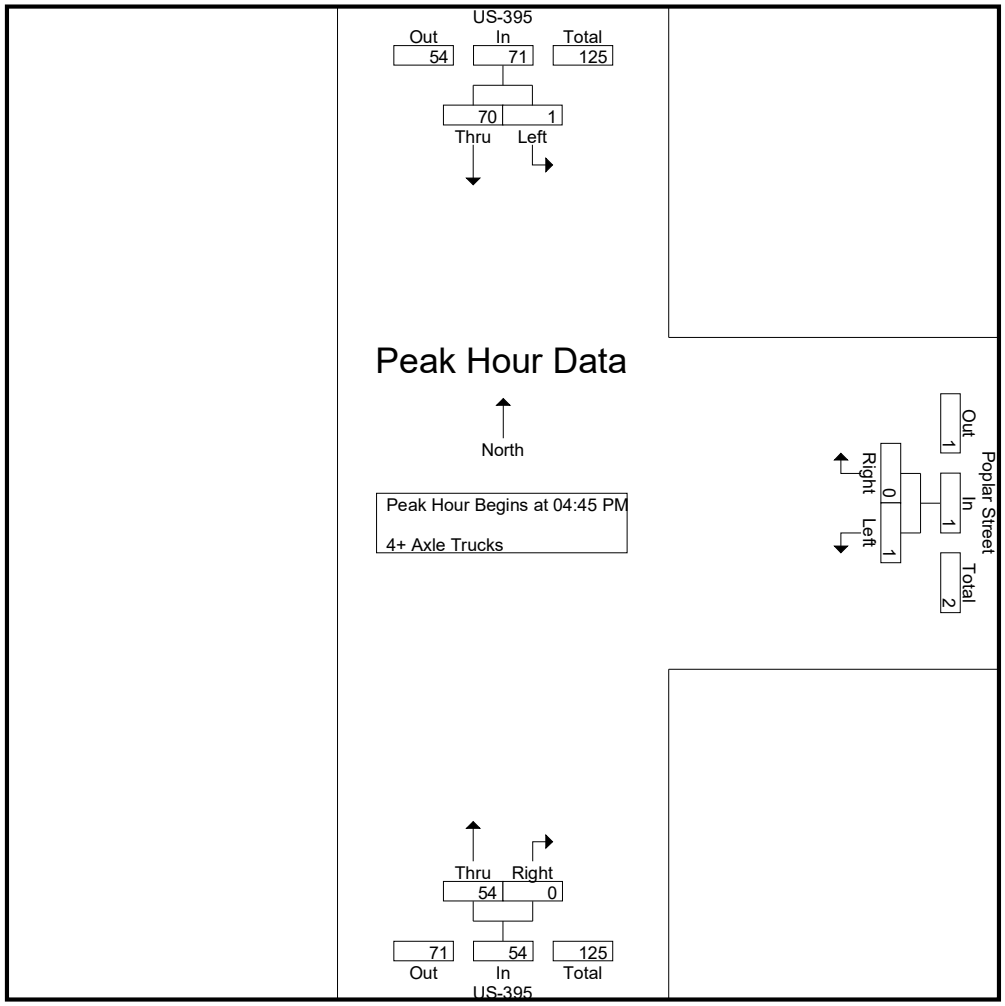

Peak Hour Analysis From 04:45 PM to 05:30 PM - Peak 1 of 1
Peak Hour for Each Approach Begins at:

	04:45 PM			04:45 PM			04:45 PM		
+0 mins.	0	12	12	0	0	0	11	0	11
+15 mins.	0	18	18	0	0	0	8	0	8
+30 mins.	0	**21**	**21**	0	0	0	**20**	0	**20**
+45 mins.	**1**	19	20	**1**	0	**1**	15	0	15
Total Volume	1	70	71	1	0	1	54	0	54
% App. Total	1.4	98.6		100	0		100	0	
PHF	.250	.833	.845	.250	.000	.250	.675	.000	.675

Location: Victorville
N/S: US-395
E/W: Poplar Street

Date: 4/12/2018
Day: Wednesday

PEDESTRIANS

	North Leg US-395	East Leg Poplar Street	South Leg US-395	West Leg Dead End	
	Pedestrians	Pedestrians	Pedestrians	Pedestrians	
7:00 AM	0	0	0	0	0
7:15 AM	0	0	0	0	0
7:30 AM	0	0	0	0	0
7:45 AM	0	0	0	0	0
8:00 AM	0	0	0	0	0
8:15 AM	0	0	0	0	0
8:30 AM	0	0	0	0	0
8:45 AM	0	0	0	0	0
TOTAL VOLUMES:	0	0	0	0	0

	North Leg US-395	East Leg Poplar Street	South Leg US-395	West Leg Dead End	
	Pedestrians	Pedestrians	Pedestrians	Pedestrians	
4:00 PM	0	0	0	0	0
4:15 PM	0	0	0	0	0
4:30 PM	0	0	0	0	0
4:45 PM	0	0	0	0	0
5:00 PM	0	0	0	0	0
5:15 PM	0	0	0	0	0
5:30 PM	0	0	0	0	0
5:45 PM	0	0	0	0	0
TOTAL VOLUMES:	0	0	0	0	0

Counts Unlimited, Inc.
PO Box 1178
Corona, CA 92878
951-268-6268

Location: Victorville
N/S: US-395
E/W: Poplar Street

Date: 4/12/2018
Day: Wednesday

BICYCLES

	Southbound US-395			Westbound Poplar Street			Northbound US-395			Eastbound Dead End			
	Left	Thru	Right	Left	Thru	Right	Left	Thru	Right	Left	Thru	Right	
7:00 AM	0	0	0	0	0	0	0	0	0	0	0	0	0
7:15 AM	0	0	0	0	0	0	0	0	0	0	0	0	0
7:30 AM	0	0	0	0	0	0	0	0	0	0	0	0	0
7:45 AM	0	0	0	0	0	0	0	0	0	0	0	0	0
8:00 AM	0	0	0	0	0	0	0	0	0	0	0	0	0
8:15 AM	0	0	0	0	0	0	0	0	0	0	0	0	0
8:30 AM	0	0	0	0	0	0	0	0	0	0	0	0	0
8:45 AM	0	0	0	0	0	0	0	0	0	0	0	0	0
TOTAL VOLUMES:	0	0	0	0	0	0	0	0	0	0	0	0	0

	Southbound US-395			Westbound Poplar Street			Northbound US-395			Eastbound Dead End			
	Left	Thru	Right	Left	Thru	Right	Left	Thru	Right	Left	Thru	Right	
4:00 PM	0	0	0	0	0	0	0	0	0	0	0	0	0
4:15 PM	0	0	0	0	0	0	0	0	0	0	0	0	0
4:30 PM	0	0	0	0	0	0	0	0	0	0	0	0	0
4:45 PM	0	0	0	0	0	0	0	0	0	0	0	0	0
5:00 PM	0	0	0	0	0	0	0	0	0	0	0	0	0
5:15 PM	0	0	0	0	0	0	0	0	0	0	0	0	0
5:30 PM	0	0	0	0	0	0	0	0	0	0	0	0	0
5:45 PM	0	0	0	0	0	0	0	0	0	0	0	0	0
TOTAL VOLUMES:	0	0	0	0	0	0	0	0	0	0	0	0	0

Counts Unlimited, Inc.
PO Box 1178
Corona, CA 92878
951-268-6268

Counts Unlimited, Inc.
PO Box 1178
Corona, CA 92878
(951)268-6268

City of Victorville
N/S: US-395
E/W: Three Flags Court/Three Flags Road
Weather: Clear

File Name : 05_VIC_395_Three AM
Site Code : 05122132
Start Date : 2/16/2022
Page No : 1

Groups Printed- Passenger Vehicles - Large 2 Axle Vehicles - 3 Axle Vehicles - 4+ Axle Trucks

	US-395 Southbound					Three Flags Road Westbound					US-395 Northbound					Three Flags Court Eastbound							
Start Time	Left	Thru	Right	RTOR	App. Total	Left	Thru	Right	RTOR	App. Total	Left	Thru	Right	RTOR	App. Total	Left	Thru	Right	RTOR	App. Total	Exclu. Total	Inclu. Total	Int. Total
07:00 AM	3	182	19	8	204	16	0	3	2	19	5	138	11	8	154	7	0	26	15	33	33	410	443
07:15 AM	2	164	23	4	189	21	1	7	6	29	10	127	7	3	144	8	0	20	16	28	29	390	419
07:30 AM	2	185	27	6	214	24	0	3	3	27	6	155	11	5	172	2	0	25	18	27	32	440	472
07:45 AM	4	184	23	5	211	9	1	0	0	10	5	121	13	1	139	4	1	27	14	32	20	392	412
Total	11	715	92	23	818	70	2	13	11	85	26	541	42	17	609	21	1	98	63	120	114	1632	1746
08:00 AM	1	164	15	6	180	12	0	5	2	17	5	125	11	3	141	10	0	13	7	23	18	361	379
08:15 AM	3	205	21	4	229	13	0	3	1	16	3	102	12	4	117	3	0	21	13	24	22	386	408
08:30 AM	6	144	28	2	178	8	0	2	1	10	4	126	9	1	139	2	1	25	15	28	19	355	374
08:45 AM	2	127	22	0	151	17	0	3	2	20	7	102	12	2	121	3	0	22	17	25	21	317	338
Total	12	640	86	12	738	50	0	13	6	63	19	455	44	10	518	18	1	81	52	100	80	1419	1499
Grand Total	23	1355	178	35	1556	120	2	26	17	148	45	996	86	27	1127	39	2	179	115	220	194	3051	3245
Apprch %	1.5	87.1	11.4			81.1	1.4	17.6			4	88.4	7.6			17.7	0.9	81.4					
Total %	0.8	44.4	5.8		51	3.9	0.1	0.9		4.9	1.5	32.6	2.8		36.9	1.3	0.1	5.9		7.2	6	94	
Passenger Vehicles	8	1186	174		1402	11	1	4		19	43	842	28		920	38	0	170		321	0	0	2662
% Passenger Vehicles	34.8	87.5	97.8	97.1	88.1	9.2	50	15.4	17.6	11.5	95.6	84.5	32.6	25.9	79.7	97.4	0	95	98.3	95.8	0	0	82
Large 2 Axle Vehicles	1	21	3		26	7	1	1		10	1	32	4		39	1	0	4		6	0	0	81
% Large 2 Axle Vehicles	4.3	1.5	1.7	2.9	1.6	5.8	50	3.8	5.9	6.1	2.2	3.2	4.7	7.4	3.4	2.6	0	2.2	0.9	1.8	0	0	2.5
3 Axle Vehicles	2	14	1		17	5	0	1		6	0	15	1		16	0	0	1		1	0	0	40
% 3 Axle Vehicles	8.7	1	0.6	0	1.1	4.2	0	3.8	0	3.6	0	1.5	1.2	0	1.4	0	0	0.6	0	0.3	0	0	1.2
4+ Axle Trucks	12	134	0		146	97	0	20		130	1	107	53		179	0	2	4		7	0	0	462
% 4+ Axle Trucks	52.2	9.9	0	0	9.2	80.8	0	76.9	76.5	78.8	2.2	10.7	61.6	66.7	15.5	0	100	2.2	0.9	2.1	0	0	14.2

	US-395 Southbound				Three Flags Road Westbound				US-395 Northbound				Three Flags Court Eastbound				
Start Time	Left	Thru	Right	App. Total	Left	Thru	Right	App. Total	Left	Thru	Right	App. Total	Left	Thru	Right	App. Total	Int. Total
Peak Hour Analysis From 07:00 AM to 08:45 AM - Peak 1 of 1																	
Peak Hour for Entire Intersection Begins at 07:00 AM																	
07:00 AM	3	182	19	204	16	0	3	19	5	138	11	154	7	0	26	**33**	410
07:15 AM	2	164	23	189	21	**1**	**7**	**29**	**10**	127	7	144	**8**	0	20	28	390
07:30 AM	2	**185**	**27**	**214**	**24**	0	3	27	6	**155**	11	**172**	2	0	25	27	**440**
07:45 AM	**4**	184	23	211	9	1	0	10	5	121	**13**	139	4	**1**	**27**	32	392
Total Volume	11	715	92	818	70	2	13	85	26	541	42	609	21	1	98	120	1632
% App. Total	1.3	87.4	11.2		82.4	2.4	15.3		4.3	88.8	6.9		17.5	0.8	81.7		
PHF	.688	.966	.852	.956	.729	.500	.464	.733	.650	.873	.808	.885	.656	.250	.907	.909	.927

Counts Unlimited, Inc.
PO Box 1178
Corona, CA 92878
(951)268-6268

City of Victorville
N/S: US-395
E/W: Three Flags Court/Three Flags Road
Weather: Clear

File Name : 05_VIC_395_Three AM
Site Code : 05122132
Start Date : 2/16/2022
Page No : 2

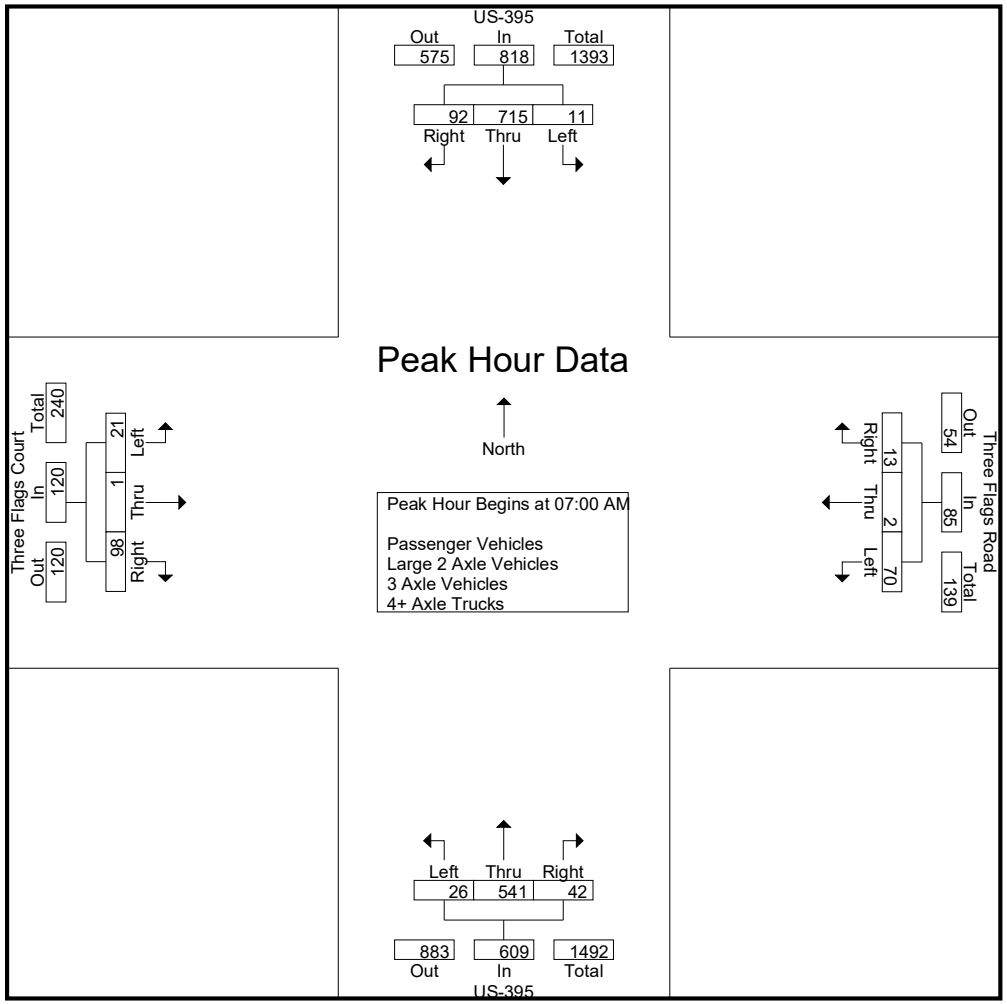

Counts Unlimited, Inc.
PO Box 1178
Corona, CA 92878
(951)268-6268

City of Victorville
N/S: US-395
E/W: Three Flags Court/Three Flags Road
Weather: Clear

File Name : 05_VIC_395_Three AM
Site Code : 05122132
Start Date : 2/16/2022

	US-395 Southbound				Three Flags Road Westbound				US-395 Northbound				Three Flags Court Eastbound				
Start Time	Left	Thru	Right	App. Total	Left	Thru	Right	App. Total	Left	Thru	Right	App. Total	Left	Thru	Right	App. Total	Int. Total
Peak Hour Analysis From 07:00 AM to 08:45 AM - Peak 1 of 1																	
Peak Hour for Each Approach Begins at:																	
	07:30 AM				07:00 AM				07:00 AM				07:00 AM				
+0 mins.	2	185	**27**	214	16	0	3	19	5	138	11	154	7	0	26	**33**	
+15 mins.	**4**	184	23	211	21	**1**	**7**	**29**	**10**	127	7	144	**8**	0	20	28	
+30 mins.	1	164	15	180	**24**	0	3	27	6	**155**	11	**172**	2	0	25	27	
+45 mins.	3	**205**	21	**229**	9	1	0	10	5	121	**13**	139	4	**1**	**27**	32	
Total Volume	10	738	86	834	70	2	13	85	26	541	42	609	21	1	98	120	
% App. Total	1.2	88.5	10.3		82.4	2.4	15.3		4.3	88.8	6.9		17.5	0.8	81.7		
PHF	.625	.900	.796	.910	.729	.500	.464	.733	.650	.873	.808	.885	.656	.250	.907	.909	

Counts Unlimited, Inc.
PO Box 1178
Corona, CA 92878
(951)268-6268

City of Victorville
N/S: US-395
E/W: Three Flags Court/Three Flags Road
Weather: Clear

File Name : 05_VIC_395_Three AM
Site Code : 05122132
Start Date : 2/16/2022
Page No : 1

Groups Printed- Passenger Vehicles

	US-395 Southbound					Three Flags Road Westbound					US-395 Northbound					Three Flags Court Eastbound							
Start Time	Left	Thru	Right	RTOR	App. Total	Left	Thru	Right	RTOR	App. Total	Left	Thru	Right	RTOR	App. Total	Left	Thru	Right	RTOR	App. Total	Exclu. Total	Inclu. Total	Int. Total
07:00 AM	1	167	19	8	187	0	0	0	0	0	5	113	2	1	120	7	0	25	14	32	23	339	362
07:15 AM	0	149	23	4	172	3	1	0	0	4	9	109	0	0	118	8	0	19	16	27	20	321	341
07:30 AM	1	155	27	6	183	3	0	0	0	3	6	132	4	1	142	2	0	25	18	27	25	355	380
07:45 AM	2	160	22	4	184	0	0	0	0	0	5	94	6	0	105	4	0	25	14	29	18	318	336
Total	4	631	91	22	726	6	1	0	0	7	25	448	12	2	485	21	0	94	62	115	86	1333	1419
08:00 AM	1	136	15	6	152	1	0	2	1	3	5	112	4	1	121	10	0	12	7	22	15	298	313
08:15 AM	1	180	21	4	202	1	0	1	1	2	3	84	4	2	91	3	0	19	13	22	20	317	337
08:30 AM	1	131	26	2	158	0	0	0	0	0	3	109	4	1	116	2	0	24	14	26	17	300	317
08:45 AM	1	108	21	0	130	3	0	1	1	4	7	89	4	1	100	2	0	21	17	23	19	257	276
Total	4	555	83	12	642	5	0	4	3	9	18	394	16	5	428	17	0	76	51	93	71	1172	1243
Grand Total	8	1186	174	34	1368	11	1	4	3	16	43	842	28	7	913	38	0	170	113	208	157	2505	2662
Apprch %	0.6	86.7	12.7			68.8	6.2	25			4.7	92.2	3.1			18.3	0	81.7					
Total %	0.3	47.3	6.9		54.6	0.4	0	0.2		0.6	1.7	33.6	1.1		36.4	1.5	0	6.8		8.3	5.9	94.1	

	US-395 Southbound				Three Flags Road Westbound				US-395 Northbound				Three Flags Court Eastbound				
Start Time	Left	Thru	Right	App. Total	Left	Thru	Right	App. Total	Left	Thru	Right	App. Total	Left	Thru	Right	App. Total	Int. Total
Peak Hour Analysis From 07:00 AM to 07:45 AM - Peak 1 of 1																	
Peak Hour for Entire Intersection Begins at 07:00 AM																	
07:00 AM	1	**167**	19	**187**	0	0	0	0	5	113	2	120	7	0	**25**	**32**	339
07:15 AM	0	149	23	172	**3**	**1**	0	**4**	**9**	109	0	118	**8**	0	19	27	321
07:30 AM	1	155	**27**	183	3	0	0	3	6	**132**	4	**142**	2	0	25	27	**355**
07:45 AM	**2**	160	22	184	0	0	0	0	5	94	**6**	105	4	0	25	29	318
Total Volume	4	631	91	726	6	1	0	7	25	448	12	485	21	0	94	115	1333
% App. Total	0.6	86.9	12.5		85.7	14.3	0		5.2	92.4	2.5		18.3	0	81.7		
PHF	.500	.945	.843	.971	.500	.250	.000	.438	.694	.848	.500	.854	.656	.000	.940	.898	.939

Counts Unlimited, Inc.
PO Box 1178
Corona, CA 92878
(951)268-6268

City of Victorville
N/S: US-395
E/W: Three Flags Court/Three Flags Road
Weather: Clear

File Name : 05_VIC_395_Three AM
Site Code : 05122132
Start Date : 2/16/2022
Page No : 2

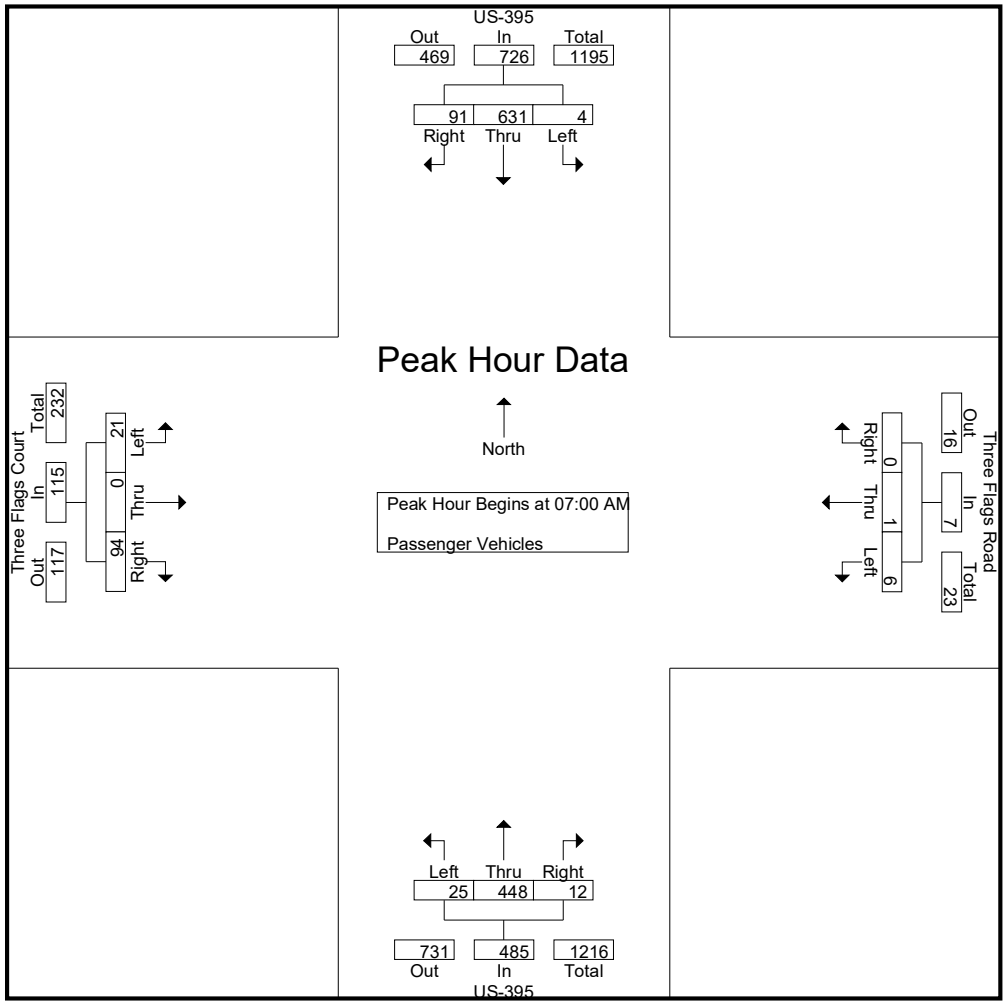

Counts Unlimited, Inc.
PO Box 1178
Corona, CA 92878
(951)268-6268

City of Victorville
N/S: US-395
E/W: Three Flags Court/Three Flags Road
Weather: Clear

File Name : 05_VIC_395_Three AM
Site Code : 05122132
Start Date : 2/16/2022

	US-395 Southbound				Three Flags Road Westbound				US-395 Northbound				Three Flags Court Eastbound				
Start Time	Left	Thru	Right	App. Total	Left	Thru	Right	App. Total	Left	Thru	Right	App. Total	Left	Thru	Right	App. Total	Int. Total
Peak Hour Analysis From 07:00 AM to 07:45 AM - Peak 1 of 1																	
Peak Hour for Each Approach Begins at:																	
	07:00 AM				07:00 AM				07:00 AM				07:00 AM				
+0 mins.	1	**167**	19	**187**	0	0	0	0	5	113	2	120	7	0	**25**	**32**	
+15 mins.	0	149	23	172	**3**	**1**	0	**4**	**9**	109	0	118	**8**	0	19	27	
+30 mins.	1	155	**27**	183	3	0	0	3	6	**132**	4	**142**	2	0	25	27	
+45 mins.	**2**	160	22	184	0	0	0	0	5	94	**6**	105	4	0	25	29	
Total Volume	4	631	91	726	6	1	0	7	25	448	12	485	21	0	94	115	
% App. Total	0.6	86.9	12.5		85.7	14.3	0		5.2	92.4	2.5		18.3	0	81.7		
PHF	.500	.945	.843	.971	.500	.250	.000	.438	.694	.848	.500	.854	.656	.000	.940	.898	

Counts Unlimited, Inc.
PO Box 1178
Corona, CA 92878
(951)268-6268

City of Victorville
N/S: US-395
E/W: Three Flags Court/Three Flags Road
Weather: Clear

File Name : 05_VIC_395_Three AM
Site Code : 05122132
Start Date : 2/16/2022
Page No : 1

Groups Printed- Large 2 Axle Vehicles

	US-395 Southbound					Three Flags Road Westbound					US-395 Northbound					Three Flags Court Eastbound							
Start Time	Left	Thru	Right	RTOR	App. Total	Left	Thru	Right	RTOR	App. Total	Left	Thru	Right	RTOR	App. Total	Left	Thru	Right	RTOR	App. Total	Exclu. Total	Inclu. Total	Int. Total
07:00 AM	0	0	0	0	0	0	0	0	0	0	0	10	0	0	10	0	0	0	0	0	0	10	10
07:15 AM	0	4	0	0	4	0	0	1	1	1	0	5	1	0	6	0	0	0	0	0	1	11	12
07:30 AM	0	5	0	0	5	3	0	0	0	3	0	3	0	0	3	0	0	0	0	0	0	11	11
07:45 AM	0	3	1	1	4	1	1	0	0	2	0	2	1	1	3	0	0	2	0	2	2	11	13
Total	0	12	1	1	13	4	1	1	1	6	0	20	2	1	22	0	0	2	0	2	3	43	46
08:00 AM	0	6	0	0	6	1	0	0	0	1	0	3	0	0	3	0	0	1	0	1	0	11	11
08:15 AM	0	1	0	0	1	0	0	0	0	0	0	3	1	1	4	0	0	0	0	0	1	5	6
08:30 AM	1	2	2	0	5	2	0	0	0	2	1	4	1	0	6	0	0	1	1	1	1	14	15
08:45 AM	0	0	0	0	0	0	0	0	0	0	0	2	0	0	2	1	0	0	0	1	0	3	3
Total	1	9	2	0	12	3	0	0	0	3	1	12	2	1	15	1	0	2	1	3	2	33	35
Grand Total	1	21	3	1	25	7	1	1	1	9	1	32	4	2	37	1	0	4	1	5	5	76	81
Apprch %	4	84	12			77.8	11.1	11.1			2.7	86.5	10.8			20	0	80					
Total %	1.3	27.6	3.9		32.9	9.2	1.3	1.3		11.8	1.3	42.1	5.3		48.7	1.3	0	5.3		6.6	6.2	93.8	

	US-395 Southbound				Three Flags Road Westbound				US-395 Northbound				Three Flags Court Eastbound				
Start Time	Left	Thru	Right	App. Total	Left	Thru	Right	App. Total	Left	Thru	Right	App. Total	Left	Thru	Right	App. Total	Int. Total
Peak Hour Analysis From 07:00 AM to 07:45 AM - Peak 1 of 1																	
Peak Hour for Entire Intersection Begins at 07:00 AM																	
07:00 AM	0	0	0	0	0	0	0	0	0	**10**	0	**10**	0	0	0	0	10
07:15 AM	0	4	0	4	0	0	**1**	1	0	5	**1**	6	0	0	0	0	**11**
07:30 AM	0	**5**	0	**5**	**3**	0	0	**3**	0	3	0	3	0	0	0	0	11
07:45 AM	0	3	**1**	4	1	**1**	0	2	0	2	1	3	0	0	**2**	**2**	11
Total Volume	0	12	1	13	4	1	1	6	0	20	2	22	0	0	2	2	43
% App. Total	0	92.3	7.7		66.7	16.7	16.7		0	90.9	9.1		0	0	100		
PHF	.000	.600	.250	.650	.333	.250	.250	.500	.000	.500	.500	.550	.000	.000	.250	.250	.977

Counts Unlimited, Inc.
PO Box 1178
Corona, CA 92878
(951)268-6268

City of Victorville
N/S: US-395
E/W: Three Flags Court/Three Flags Road
Weather: Clear

File Name : 05_VIC_395_Three AM
Site Code : 05122132
Start Date : 2/16/2022
Page No : 2

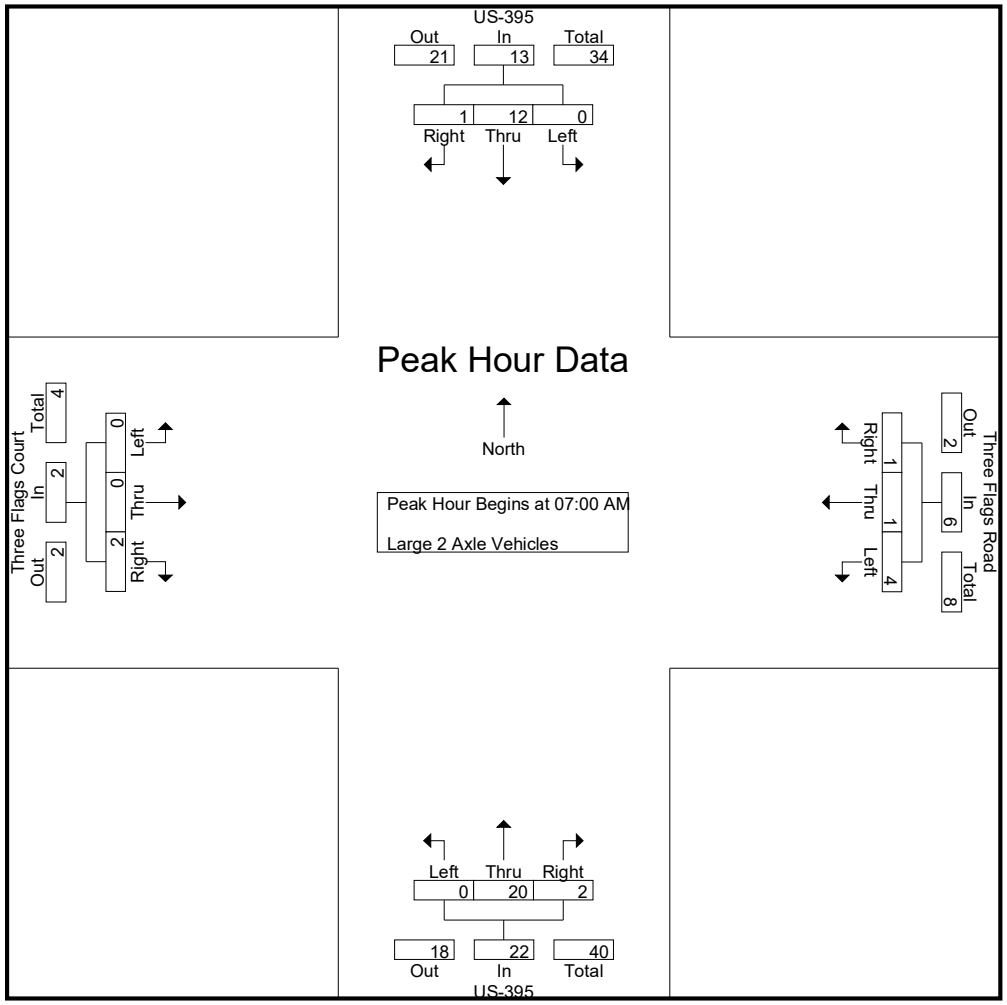

Counts Unlimited, Inc.
PO Box 1178
Corona, CA 92878
(951)268-6268

City of Victorville
N/S: US-395
E/W: Three Flags Court/Three Flags Road
Weather: Clear

File Name : 05_VIC_395_Three AM
Site Code : 05122132
Start Date : 2/16/2022

	US-395 Southbound				Three Flags Road Westbound				US-395 Northbound				Three Flags Court Eastbound				
Start Time	Left	Thru	Right	App. Total	Left	Thru	Right	App. Total	Left	Thru	Right	App. Total	Left	Thru	Right	App. Total	Int. Total
Peak Hour Analysis From 07:00 AM to 07:45 AM - Peak 1 of 1																	
Peak Hour for Each Approach Begins at:																	
	07:00 AM				07:00 AM				07:00 AM				07:00 AM				
+0 mins.	0	0	0	0	0	0	0	0	0	**10**	0	**10**	0	0	0	0	
+15 mins.	0	4	0	4	0	0	**1**	1	0	5	**1**	6	0	0	0	0	
+30 mins.	0	**5**	0	**5**	**3**	0	0	**3**	0	3	0	3	0	0	0	0	
+45 mins.	0	3	**1**	4	1	**1**	0	2	0	2	1	3	0	0	**2**	**2**	
Total Volume	0	12	1	13	4	1	1	6	0	20	2	22	0	0	2	2	
% App. Total	0	92.3	7.7		66.7	16.7	16.7		0	90.9	9.1		0	0	100		
PHF	.000	.600	.250	.650	.333	.250	.250	.500	.000	.500	.500	.550	.000	.000	.250	.250	

Counts Unlimited, Inc.
PO Box 1178
Corona, CA 92878
(951)268-6268

City of Victorville
N/S: US-395
E/W: Three Flags Court/Three Flags Road
Weather: Clear

File Name : 05_VIC_395_Three AM
Site Code : 05122132
Start Date : 2/16/2022
Page No : 1

Groups Printed- 3 Axle Vehicles

	US-395 Southbound					Three Flags Road Westbound					US-395 Northbound					Three Flags Court Eastbound							
Start Time	Left	Thru	Right	RTOR	App. Total	Left	Thru	Right	RTOR	App. Total	Left	Thru	Right	RTOR	App. Total	Left	Thru	Right	RTOR	App. Total	Exclu. Total	Inclu. Total	Int. Total
07:00 AM	0	0	0	0	0	1	0	0	0	1	0	3	0	0	3	0	0	0	0	0	0	4	4
07:15 AM	0	2	0	0	2	1	0	0	0	1	0	0	0	0	0	0	0	0	0	0	0	3	3
07:30 AM	0	2	0	0	2	2	0	0	0	2	0	3	0	0	3	0	0	0	0	0	0	7	7
07:45 AM	0	3	0	0	3	0	0	0	0	0	0	1	0	0	1	0	0	0	0	0	0	4	4
Total	0	7	0	0	7	4	0	0	0	4	0	7	0	0	7	0	0	0	0	0	0	18	18
08:00 AM	0	2	0	0	2	0	0	0	0	0	0	3	0	0	3	0	0	0	0	0	0	5	5
08:15 AM	1	3	0	0	4	0	0	1	0	1	0	1	1	0	2	0	0	0	0	0	0	7	7
08:30 AM	0	0	0	0	0	1	0	0	0	1	0	2	0	0	2	0	0	0	0	0	0	3	3
08:45 AM	1	2	1	0	4	0	0	0	0	0	0	2	0	0	2	0	0	1	0	1	0	7	7
Total	2	7	1	0	10	1	0	1	0	2	0	8	1	0	9	0	0	1	0	1	0	22	22
Grand Total	2	14	1	0	17	5	0	1	0	6	0	15	1	0	16	0	0	1	0	1	0	40	40
Apprch %	11.8	82.4	5.9			83.3	0	16.7			0	93.8	6.2			0	0	100					
Total %	5	35	2.5		42.5	12.5	0	2.5		15	0	37.5	2.5		40	0	0	2.5		2.5	0	100	

	US-395 Southbound				Three Flags Road Westbound				US-395 Northbound				Three Flags Court Eastbound				
Start Time	Left	Thru	Right	App. Total	Left	Thru	Right	App. Total	Left	Thru	Right	App. Total	Left	Thru	Right	App. Total	Int. Total
Peak Hour Analysis From 07:00 AM to 07:45 AM - Peak 1 of 1																	
Peak Hour for Entire Intersection Begins at 07:00 AM																	
07:00 AM	0	0	0	0	1	0	0	1	0	**3**	0	**3**	0	0	0	0	4
07:15 AM	0	2	0	2	1	0	0	1	0	0	0	0	0	0	0	0	3
07:30 AM	0	2	0	2	**2**	0	0	**2**	0	3	0	3	0	0	0	0	**7**
07:45 AM	0	**3**	0	**3**	0	0	0	0	0	1	0	1	0	0	0	0	4
Total Volume	0	7	0	7	4	0	0	4	0	7	0	7	0	0	0	0	18
% App. Total	0	100	0		100	0	0		0	100	0		0	0	0		
PHF	.000	.583	.000	.583	.500	.000	.000	.500	.000	.583	.000	.583	.000	.000	.000	.000	.643

Counts Unlimited, Inc.
PO Box 1178
Corona, CA 92878
(951)268-6268

City of Victorville
N/S: US-395
E/W: Three Flags Court/Three Flags Road
Weather: Clear

File Name : 05_VIC_395_Three AM
Site Code : 05122132
Start Date : 2/16/2022
Page No : 2

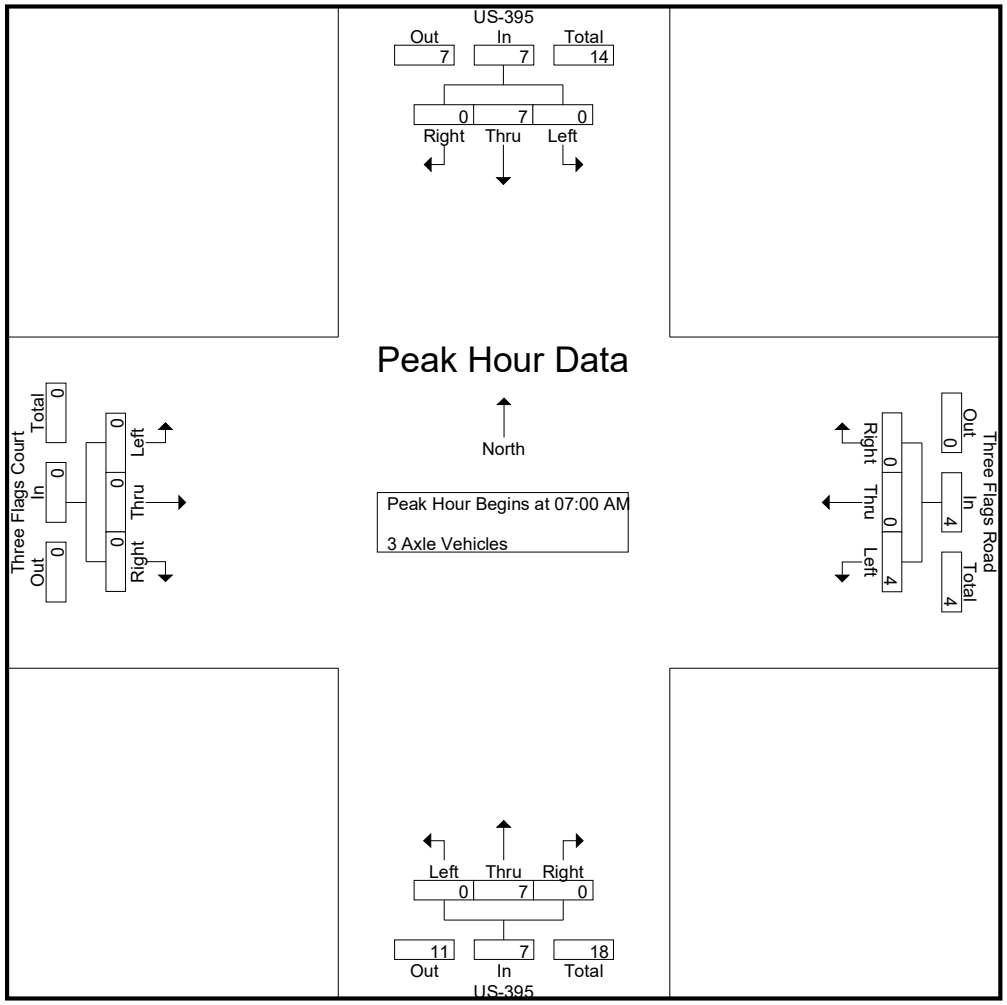

Counts Unlimited, Inc.
PO Box 1178
Corona, CA 92878
(951)268-6268

City of Victorville
N/S: US-395
E/W: Three Flags Court/Three Flags Road
Weather: Clear

File Name : 05_VIC_395_Three AM
Site Code : 05122132
Start Date : 2/16/2022
Page No : 3

	US-395 Southbound				Three Flags Road Westbound				US-395 Northbound				Three Flags Court Eastbound				
Start Time	Left	Thru	Right	App. Total	Left	Thru	Right	App. Total	Left	Thru	Right	App. Total	Left	Thru	Right	App. Total	Int. Total
Peak Hour Analysis From 07:00 AM to 07:45 AM - Peak 1 of 1																	
Peak Hour for Each Approach Begins at:																	
	07:00 AM				07:00 AM				07:00 AM				07:00 AM				
+0 mins.	0	0	0	0	1	0	0	1	0	**3**	0	**3**	0	0	0	0	
+15 mins.	0	2	0	2	1	0	0	1	0	0	0	0	0	0	0	0	
+30 mins.	0	2	0	2	**2**	0	0	**2**	0	3	0	3	0	0	0	0	
+45 mins.	0	**3**	0	**3**	0	0	0	0	0	1	0	1	0	0	0	0	
Total Volume	0	7	0	7	4	0	0	4	0	7	0	7	0	0	0	0	0
% App. Total	0	100	0		100	0	0		0	100	0		0	0	0	0	
PHF	.000	.583	.000	.583	.500	.000	.000	.500	.000	.583	.000	.583	.000	.000	.000	.000	

Counts Unlimited, Inc.
PO Box 1178
Corona, CA 92878
(951)268-6268

City of Victorville
N/S: US-395
E/W: Three Flags Court/Three Flags Road
Weather: Clear

File Name : 05_VIC_395_Three AM
Site Code : 05122132
Start Date : 2/16/2022
Page No : 1

Groups Printed- 4+ Axle Trucks

	US-395 Southbound					Three Flags Road Westbound					US-395 Northbound					Three Flags Court Eastbound							
Start Time	Left	Thru	Right	RTOR	App. Total	Left	Thru	Right	RTOR	App. Total	Left	Thru	Right	RTOR	App. Total	Left	Thru	Right	RTOR	App. Total	Exclu. Total	Inclu. Total	Int. Total
07:00 AM	2	15	0	0	17	15	0	3	2	18	0	12	9	7	21	0	0	1	1	1	10	57	67
07:15 AM	2	9	0	0	11	17	0	6	5	23	1	13	6	3	20	0	0	1	0	1	8	55	63
07:30 AM	1	23	0	0	24	16	0	3	3	19	0	17	7	4	24	0	0	0	0	0	7	67	74
07:45 AM	2	18	0	0	20	8	0	0	0	8	0	24	6	0	30	0	1	0	0	1	0	59	59
Total	7	65	0	0	72	56	0	12	10	68	1	66	28	14	95	0	1	2	1	3	25	238	263
08:00 AM	0	20	0	0	20	10	0	3	1	13	0	7	7	2	14	0	0	0	0	0	3	47	50
08:15 AM	1	21	0	0	22	12	0	1	0	13	0	14	6	1	20	0	0	2	0	2	1	57	58
08:30 AM	4	11	0	0	15	5	0	2	1	7	0	11	4	0	15	0	1	0	0	1	1	38	39
08:45 AM	0	17	0	0	17	14	0	2	1	16	0	9	8	1	17	0	0	0	0	0	2	50	52
Total	5	69	0	0	74	41	0	8	3	49	0	41	25	4	66	0	1	2	0	3	7	192	199
Grand Total	12	134	0	0	146	97	0	20	13	117	1	107	53	18	161	0	2	4	1	6	32	430	462
Apprch %	8.2	91.8	0			82.9	0	17.1			0.6	66.5	32.9			0	33.3	66.7					
Total %	2.8	31.2	0		34	22.6	0	4.7		27.2	0.2	24.9	12.3		37.4	0	0.5	0.9		1.4	6.9	93.1	

	US-395 Southbound				Three Flags Road Westbound				US-395 Northbound				Three Flags Court Eastbound				
Start Time	Left	Thru	Right	App. Total	Left	Thru	Right	App. Total	Left	Thru	Right	App. Total	Left	Thru	Right	App. Total	Int. Total
Peak Hour Analysis From 07:00 AM to 07:45 AM - Peak 1 of 1																	
Peak Hour for Entire Intersection Begins at 07:00 AM																	
07:00 AM	**2**	15	0	17	15	0	3	18	0	12	**9**	21	0	0	**1**	**1**	57
07:15 AM	2	9	0	11	**17**	0	**6**	**23**	**1**	13	6	20	0	0	1	1	55
07:30 AM	1	**23**	0	**24**	16	0	3	19	0	17	7	24	0	0	0	0	**67**
07:45 AM	2	18	0	20	8	0	0	8	0	**24**	6	**30**	0	**1**	0	1	59
Total Volume	7	65	0	72	56	0	12	68	1	66	28	95	0	1	2	3	238
% App. Total	9.7	90.3	0		82.4	0	17.6		1.1	69.5	29.5		0	33.3	66.7		
PHF	.875	.707	.000	.750	.824	.000	.500	.739	.250	.688	.778	.792	.000	.250	.500	.750	.888

Counts Unlimited, Inc.
PO Box 1178
Corona, CA 92878
(951)268-6268

City of Victorville
N/S: US-395
E/W: Three Flags Court/Three Flags Road
Weather: Clear

File Name : 05_VIC_395_Three AM
Site Code : 05122132
Start Date : 2/16/2022
Page No : 2

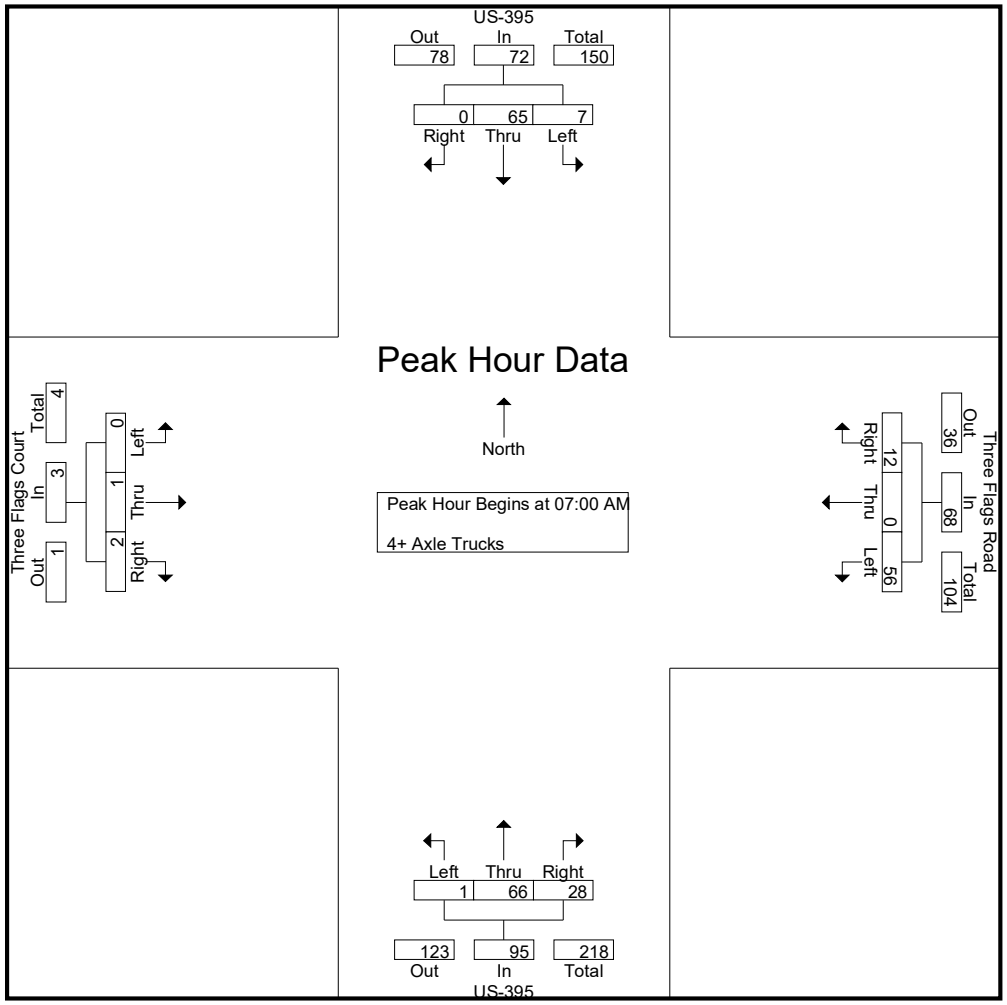

Counts Unlimited, Inc.
PO Box 1178
Corona, CA 92878
(951)268-6268

City of Victorville
N/S: US-395
E/W: Three Flags Court/Three Flags Road
Weather: Clear

File Name : 05_VIC_395_Three AM
Site Code : 05122132
Start Date : 2/16/2022
Page No : 3

	US-395 Southbound				Three Flags Road Westbound				US-395 Northbound				Three Flags Court Eastbound				
Start Time	Left	Thru	Right	App. Total	Left	Thru	Right	App. Total	Left	Thru	Right	App. Total	Left	Thru	Right	App. Total	Int. Total
Peak Hour Analysis From 07:00 AM to 07:45 AM - Peak 1 of 1																	
Peak Hour for Each Approach Begins at:																	
	07:00 AM				07:00 AM				07:00 AM				07:00 AM				
+0 mins.	**2**	15	0	17	15	0	3	18	0	12	**9**	21	0	0	**1**	**1**	
+15 mins.	2	9	0	11	**17**	0	**6**	**23**	**1**	13	6	20	0	0	1	1	
+30 mins.	1	**23**	0	**24**	16	0	3	19	0	17	7	24	0	0	0	0	
+45 mins.	2	18	0	20	8	0	0	8	0	**24**	6	**30**	0	**1**	0	1	
Total Volume	7	65	0	72	56	0	12	68	1	66	28	95	0	1	2	3	
% App. Total	9.7	90.3	0		82.4	0	17.6		1.1	69.5	29.5		0	33.3	66.7		
PHF	.875	.707	.000	.750	.824	.000	.500	.739	.250	.688	.778	.792	.000	.250	.500	.750	

Counts Unlimited, Inc.
PO Box 1178
Corona, CA 92878
(951)268-6268

City of Victorville
N/S: US-395
E/W: Three Flags Court/Three Flags Road
Weather: Clear

File Name : 05_VIC_395_Three PM
Site Code : 05122132
Start Date : 2/16/2022
Page No : 1

Groups Printed- Passenger Vehicles - Large 2 Axle Vehicles - 3 Axle Vehicles - 4+ Axle Trucks

	US-395 Southbound					Three Flags Road Westbound					US-395 Northbound					Three Flags Court Eastbound							
Start Time	Left	Thru	Right	RTOR	App. Total	Left	Thru	Right	RTOR	App. Total	Left	Thru	Right	RTOR	App. Total	Left	Thru	Right	RTOR	App. Total	Exclu. Total	Inclu. Total	Int. Total
04:00 PM	3	153	23	2	179	11	1	5	2	17	10	265	16	4	291	9	1	17	12	27	20	514	534
04:15 PM	2	141	24	9	167	19	0	8	5	27	13	207	22	4	242	15	1	22	18	38	36	474	510
04:30 PM	6	168	16	2	190	16	3	0	0	19	12	262	17	2	291	8	1	27	16	36	20	536	556
04:45 PM	3	132	18	5	153	15	1	9	4	25	10	247	16	2	273	10	0	13	8	23	19	474	493
Total	14	594	81	18	689	61	5	22	11	88	45	981	71	12	1097	42	3	79	54	124	95	1998	2093
05:00 PM	4	161	22	5	187	17	0	4	3	21	6	220	17	3	243	8	0	22	14	30	25	481	506
05:15 PM	4	160	18	4	182	13	3	6	1	22	14	275	13	1	302	11	1	15	8	27	14	533	547
05:30 PM	3	150	25	8	178	12	2	10	5	24	17	307	13	2	337	13	0	23	17	36	32	575	607
05:45 PM	4	110	13	7	127	12	0	7	2	19	13	260	14	1	287	11	1	14	9	26	19	459	478
Total	15	581	78	24	674	54	5	27	11	86	50	1062	57	7	1169	43	2	74	48	119	90	2048	2138
Grand Total	29	1175	159	42	1363	115	10	49	22	174	95	2043	128	19	2266	85	5	153	102	243	185	4046	4231
Apprch %	2.1	86.2	11.7			66.1	5.7	28.2			4.2	90.2	5.6			35	2.1	63					
Total %	0.7	29	3.9		33.7	2.8	0.2	1.2		4.3	2.3	50.5	3.2		56	2.1	0.1	3.8		6	4.4	95.6	
Passenger Vehicles	7	1029	155		1233	34	7	24		79	89	1906	41		2039	81	4	147		331	0	0	3682
% Passenger Vehicles	24.1	87.6	97.5	100	87.8	29.6	70	49	63.6	40.3	93.7	93.3	32	15.8	89.2	95.3	80	96.1	97.1	95.9	0	0	87
Large 2 Axle Vehicles	0	26	4		30	2	0	0		2	4	35	6		46	3	0	5		11	0	0	89
% Large 2 Axle Vehicles	0	2.2	2.5	0	2.1	1.7	0	0	0	1	4.2	1.7	4.7	5.3	2	3.5	0	3.3	2.9	3.2	0	0	2.1
3 Axle Vehicles	3	7	0		10	9	1	2		12	0	15	3		20	0	0	0		0	0	0	42
% 3 Axle Vehicles	10.3	0.6	0	0	0.7	7.8	10	4.1	0	6.1	0	0.7	2.3	10.5	0.9	0	0	0	0	0	0	0	1
4+ Axle Trucks	19	113	0		132	70	2	23		103	2	87	78		180	1	1	1		3	0	0	418
% 4+ Axle Trucks	65.5	9.6	0	0	9.4	60.9	20	46.9	36.4	52.6	2.1	4.3	60.9	68.4	7.9	1.2	20	0.7	0	0.9	0	0	9.9

	US-395 Southbound				Three Flags Road Westbound				US-395 Northbound				Three Flags Court Eastbound				
Start Time	Left	Thru	Right	App. Total	Left	Thru	Right	App. Total	Left	Thru	Right	App. Total	Left	Thru	Right	App. Total	Int. Total
Peak Hour Analysis From 04:00 PM to 05:45 PM - Peak 1 of 1																	
Peak Hour for Entire Intersection Begins at 04:45 PM																	
04:45 PM	3	132	18	153	15	1	9	**25**	10	247	16	273	10	0	13	23	474
05:00 PM	**4**	**161**	22	**187**	**17**	0	4	21	6	220	**17**	243	8	0	22	30	481
05:15 PM	4	160	18	182	13	**3**	6	22	14	275	13	302	11	**1**	15	27	533
05:30 PM	3	150	**25**	178	12	2	**10**	24	**17**	**307**	13	**337**	**13**	0	**23**	**36**	**575**
Total Volume	14	603	83	700	57	6	29	92	47	1049	59	1155	42	1	73	116	2063
% App. Total	2	86.1	11.9		62	6.5	31.5		4.1	90.8	5.1		36.2	0.9	62.9		
PHF	.875	.936	.830	.936	.838	.500	.725	.920	.691	.854	.868	.857	.808	.250	.793	.806	.897

Counts Unlimited, Inc.
PO Box 1178
Corona, CA 92878
(951)268-6268

City of Victorville
N/S: US-395
E/W: Three Flags Court/Three Flags Road
Weather: Clear

File Name : 05_VIC_395_Three PM
Site Code : 05122132
Start Date : 2/16/2022
Page No : 2

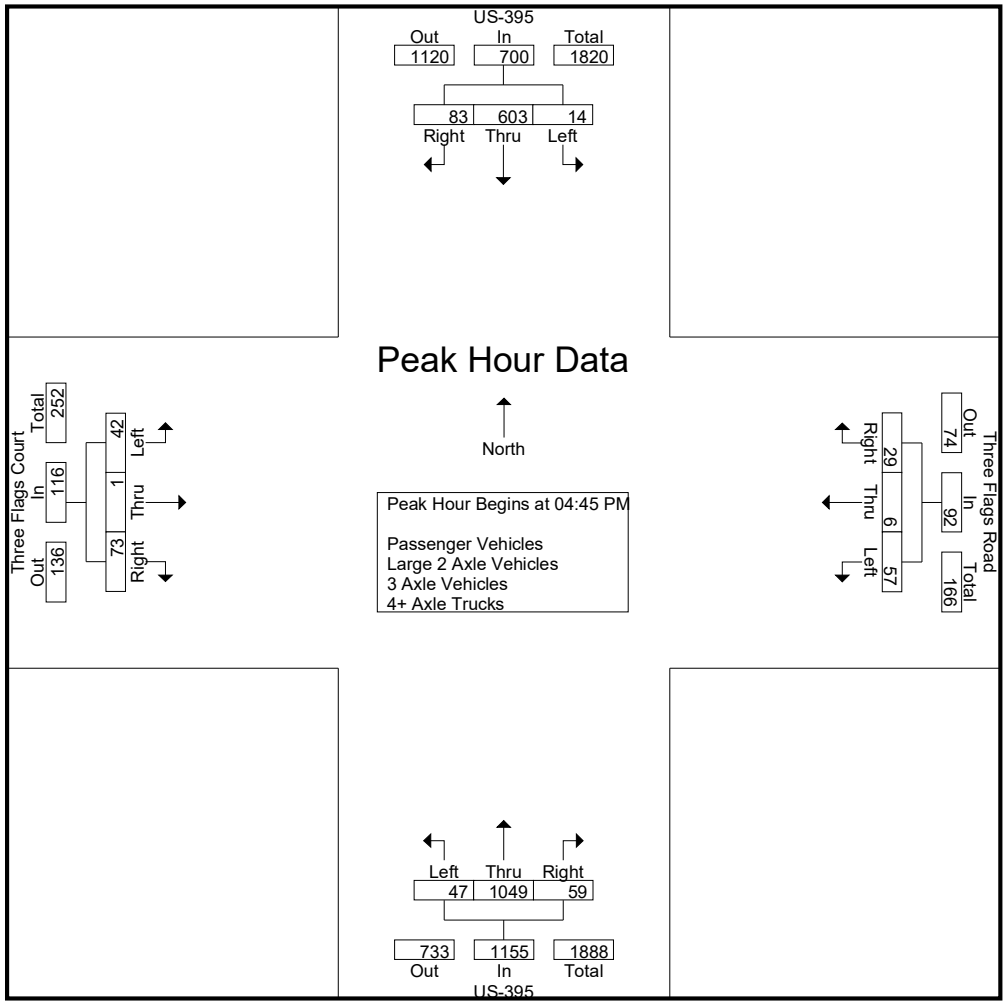

Counts Unlimited, Inc.
PO Box 1178
Corona, CA 92878
(951)268-6268

City of Victorville
N/S: US-395
E/W: Three Flags Court/Three Flags Road
Weather: Clear

File Name : 05_VIC_395_Three PM
Site Code : 05122132
Start Date : 2/16/2022
Page No : 3

	US-395 Southbound				Three Flags Road Westbound				US-395 Northbound				Three Flags Court Eastbound				
Start Time	Left	Thru	Right	App. Total	Left	Thru	Right	App. Total	Left	Thru	Right	App. Total	Left	Thru	Right	App. Total	Int. Total
Peak Hour Analysis From 04:00 PM to 05:45 PM - Peak 1 of 1																	
Peak Hour for Each Approach Begins at:																	
	04:30 PM				04:15 PM				05:00 PM				04:15 PM				
+0 mins.	**6**	**168**	16	**190**	**19**	0	8	**27**	6	220	**17**	243	**15**	**1**	22	**38**	
+15 mins.	3	132	18	153	16	**3**	0	19	14	275	13	302	8	1	**27**	36	
+30 mins.	4	161	**22**	187	15	1	**9**	25	**17**	**307**	13	**337**	10	0	13	23	
+45 mins.	4	160	18	182	17	0	4	21	13	260	14	287	8	0	22	30	
Total Volume	17	621	74	712	67	4	21	92	50	1062	57	1169	41	2	84	127	
% App. Total	2.4	87.2	10.4		72.8	4.3	22.8		4.3	90.8	4.9		32.3	1.6	66.1		
PHF	.708	.924	.841	.937	.882	.333	.583	.852	.735	.865	.838	.867	.683	.500	.778	.836	

Counts Unlimited, Inc.
PO Box 1178
Corona, CA 92878
(951)268-6268

City of Victorville
N/S: US-395
E/W: Three Flags Court/Three Flags Road
Weather: Clear

File Name : 05_VIC_395_Three PM
Site Code : 05122132
Start Date : 2/16/2022
Page No : 1

Groups Printed- Passenger Vehicles

	US-395 Southbound					Three Flags Road Westbound					US-395 Northbound					Three Flags Court Eastbound							
Start Time	Left	Thru	Right	RTOR	App. Total	Left	Thru	Right	RTOR	App. Total	Left	Thru	Right	RTOR	App. Total	Left	Thru	Right	RTOR	App. Total	Exclu. Total	Inclu. Total	Int. Total
04:00 PM	2	139	23	2	164	1	1	3	1	5	10	245	4	0	259	9	1	17	12	27	15	455	470
04:15 PM	1	117	23	9	141	4	0	6	4	10	11	195	8	0	214	15	1	22	18	38	31	403	434
04:30 PM	1	150	15	2	166	4	2	0	0	6	11	239	8	1	258	8	1	25	15	34	18	464	482
04:45 PM	0	122	17	5	139	3	1	3	2	7	10	232	5	0	247	8	0	12	8	20	15	413	428
Total	4	528	78	18	610	12	4	12	7	28	42	911	25	1	978	40	3	76	53	119	79	1735	1814
05:00 PM	1	146	22	5	169	9	0	1	1	10	5	209	7	1	221	7	0	21	14	28	21	428	449
05:15 PM	1	135	18	4	154	5	3	2	1	10	14	252	4	0	270	10	1	15	8	26	13	460	473
05:30 PM	0	130	24	8	154	4	0	5	3	9	15	289	4	1	308	13	0	22	16	35	28	506	534
05:45 PM	1	90	13	7	104	4	0	4	2	8	13	245	1	0	259	11	0	13	8	24	17	395	412
Total	3	501	77	24	581	22	3	12	7	37	47	995	16	2	1058	41	1	71	46	113	79	1789	1868
Grand Total	7	1029	155	42	1191	34	7	24	14	65	89	1906	41	3	2036	81	4	147	99	232	158	3524	3682
Apprch %	0.6	86.4	13			52.3	10.8	36.9			4.4	93.6	2			34.9	1.7	63.4					
Total %	0.2	29.2	4.4		33.8	1	0.2	0.7		1.8	2.5	54.1	1.2		57.8	2.3	0.1	4.2		6.6	4.3	95.7	

	US-395 Southbound				Three Flags Road Westbound				US-395 Northbound				Three Flags Court Eastbound				
Start Time	Left	Thru	Right	App. Total	Left	Thru	Right	App. Total	Left	Thru	Right	App. Total	Left	Thru	Right	App. Total	Int. Total
Peak Hour Analysis From 04:45 PM to 05:30 PM - Peak 1 of 1																	
Peak Hour for Entire Intersection Begins at 04:45 PM																	
04:45 PM	0	122	17	139	3	1	3	7	10	232	5	247	8	0	12	20	413
05:00 PM	**1**	**146**	22	**169**	**9**	0	1	**10**	5	209	**7**	221	7	0	21	28	428
05:15 PM	1	135	18	154	5	**3**	2	10	14	252	4	270	10	**1**	15	26	460
05:30 PM	0	130	**24**	154	4	0	**5**	9	**15**	**289**	4	**308**	**13**	0	**22**	**35**	**506**
Total Volume	2	533	81	616	21	4	11	36	44	982	20	1046	38	1	70	109	1807
% App. Total	0.3	86.5	13.1		58.3	11.1	30.6		4.2	93.9	1.9		34.9	0.9	64.2		
PHF	.500	.913	.844	.911	.583	.333	.550	.900	.733	.849	.714	.849	.731	.250	.795	.779	.893

Counts Unlimited, Inc.
PO Box 1178
Corona, CA 92878
(951)268-6268

City of Victorville
N/S: US-395
E/W: Three Flags Court/Three Flags Road
Weather: Clear

File Name : 05_VIC_395_Three PM
Site Code : 05122132
Start Date : 2/16/2022
Page No : 2

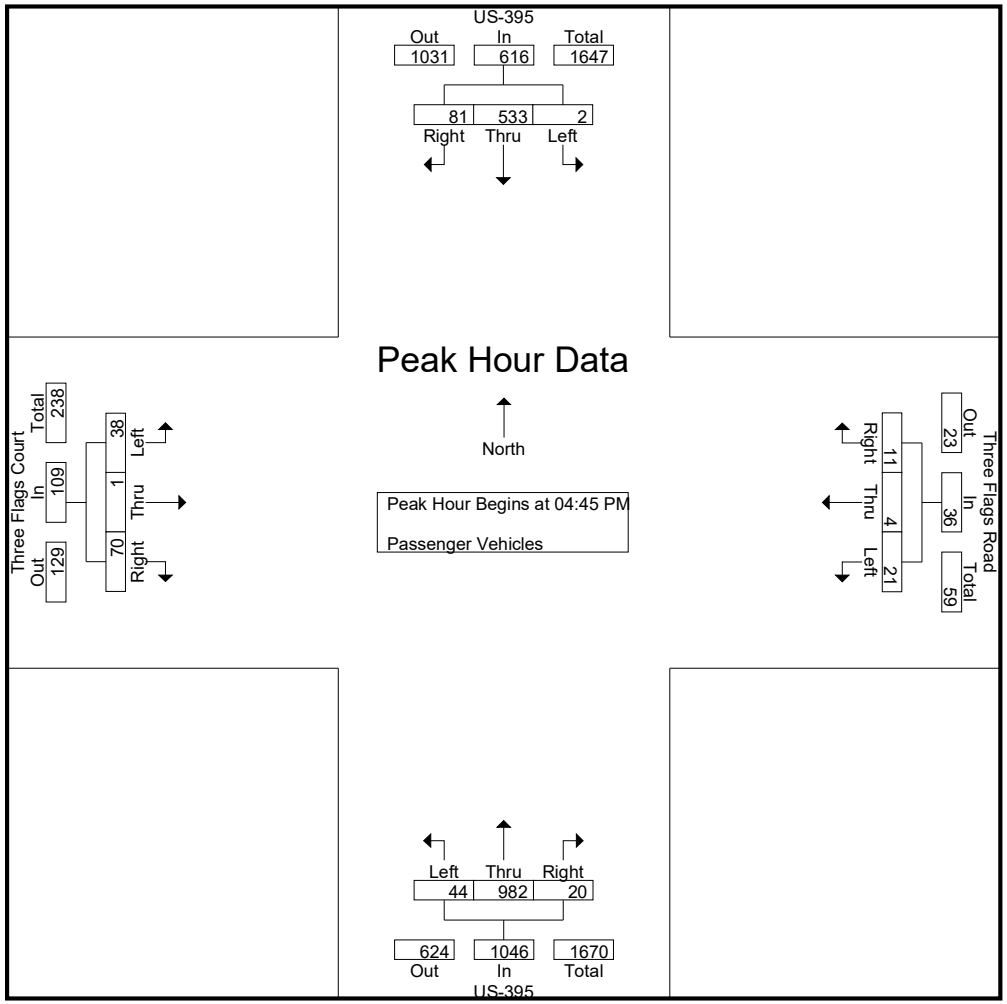

Counts Unlimited, Inc.
PO Box 1178
Corona, CA 92878
(951)268-6268

City of Victorville
N/S: US-395
E/W: Three Flags Court/Three Flags Road
Weather: Clear

File Name : 05_VIC_395_Three PM
Site Code : 05122132
Start Date : 2/16/2022

	US-395 Southbound				Three Flags Road Westbound				US-395 Northbound				Three Flags Court Eastbound				
Start Time	Left	Thru	Right	App. Total	Left	Thru	Right	App. Total	Left	Thru	Right	App. Total	Left	Thru	Right	App. Total	Int. Total
Peak Hour Analysis From 04:45 PM to 05:30 PM - Peak 1 of 1																	
Peak Hour for Each Approach Begins at:																	
	04:45 PM				04:45 PM				04:45 PM				04:45 PM				
+0 mins.	0	122	17	139	3	1	3	7	10	232	5	247	8	0	12	20	
+15 mins.	**1**	**146**	22	**169**	**9**	0	1	**10**	5	209	**7**	221	7	0	21	28	
+30 mins.	1	135	18	154	5	**3**	2	10	14	252	4	270	10	**1**	15	26	
+45 mins.	0	130	**24**	154	4	0	**5**	9	**15**	**289**	4	**308**	**13**	0	**22**	**35**	
Total Volume	2	533	81	616	21	4	11	36	44	982	20	1046	38	1	70	109	
% App. Total	0.3	86.5	13.1		58.3	11.1	30.6		4.2	93.9	1.9		34.9	0.9	64.2		
PHF	.500	.913	.844	.911	.583	.333	.550	.900	.733	.849	.714	.849	.731	.250	.795	.779	

Counts Unlimited, Inc.
PO Box 1178
Corona, CA 92878
(951)268-6268

City of Victorville
N/S: US-395
E/W: Three Flags Court/Three Flags Road
Weather: Clear

File Name : 05_VIC_395_Three PM
Site Code : 05122132
Start Date : 2/16/2022
Page No : 1

Groups Printed- Large 2 Axle Vehicles

	US-395 Southbound					Three Flags Road Westbound					US-395 Northbound					Three Flags Court Eastbound							
Start Time	Left	Thru	Right	RTOR	App. Total	Left	Thru	Right	RTOR	App. Total	Left	Thru	Right	RTOR	App. Total	Left	Thru	Right	RTOR	App. Total	Exclu. Total	Inclu. Total	Int. Total
04:00 PM	0	5	0	0	5	0	0	0	0	0	0	5	1	0	6	0	0	0	0	0	0	11	11
04:15 PM	0	5	1	0	6	0	0	0	0	0	1	3	1	1	5	0	0	0	0	0	1	11	12
04:30 PM	0	2	1	0	3	0	0	0	0	0	1	6	0	0	7	0	0	2	1	2	1	12	13
04:45 PM	0	3	1	0	4	1	0	0	0	1	0	4	0	0	4	2	0	1	0	3	0	12	12
Total	0	15	3	0	18	1	0	0	0	1	2	18	2	1	22	2	0	3	1	5	2	46	48
05:00 PM	0	3	0	0	3	0	0	0	0	0	1	4	2	0	7	0	0	0	0	0	0	10	10
05:15 PM	0	4	0	0	4	1	0	0	0	1	0	5	1	0	6	1	0	0	0	1	0	12	12
05:30 PM	0	2	1	0	3	0	0	0	0	0	1	4	0	0	5	0	0	1	1	1	1	9	10
05:45 PM	0	2	0	0	2	0	0	0	0	0	0	4	1	0	5	0	0	1	1	1	1	8	9
Total	0	11	1	0	12	1	0	0	0	1	2	17	4	0	23	1	0	2	2	3	2	39	41
Grand Total	0	26	4	0	30	2	0	0	0	2	4	35	6	1	45	3	0	5	3	8	4	85	89
Apprch %	0	86.7	13.3			100	0	0			8.9	77.8	13.3			37.5	0	62.5					
Total %	0	30.6	4.7		35.3	2.4	0	0		2.4	4.7	41.2	7.1		52.9	3.5	0	5.9		9.4	4.5	95.5	

	US-395 Southbound				Three Flags Road Westbound				US-395 Northbound				Three Flags Court Eastbound				
Start Time	Left	Thru	Right	App. Total	Left	Thru	Right	App. Total	Left	Thru	Right	App. Total	Left	Thru	Right	App. Total	Int. Total
Peak Hour Analysis From 04:45 PM to 05:30 PM - Peak 1 of 1																	
Peak Hour for Entire Intersection Begins at 04:45 PM																	
04:45 PM	0	3	**1**	**4**	**1**	0	0	**1**	0	4	0	4	**2**	0	**1**	**3**	**12**
05:00 PM	0	3	0	3	0	0	0	0	**1**	4	**2**	**7**	0	0	0	0	10
05:15 PM	0	**4**	0	4	1	0	0	1	0	**5**	1	6	1	0	0	1	12
05:30 PM	0	2	1	3	0	0	0	0	1	4	0	5	0	0	1	1	9
Total Volume	0	12	2	14	2	0	0	2	2	17	3	22	3	0	2	5	43
% App. Total	0	85.7	14.3		100	0	0		9.1	77.3	13.6		60	0	40		
PHF	.000	.750	.500	.875	.500	.000	.000	.500	.500	.850	.375	.786	.375	.000	.500	.417	.896

Counts Unlimited, Inc.
PO Box 1178
Corona, CA 92878
(951)268-6268

City of Victorville
N/S: US-395
E/W: Three Flags Court/Three Flags Road
Weather: Clear

File Name : 05_VIC_395_Three PM
Site Code : 05122132
Start Date : 2/16/2022
Page No : 2

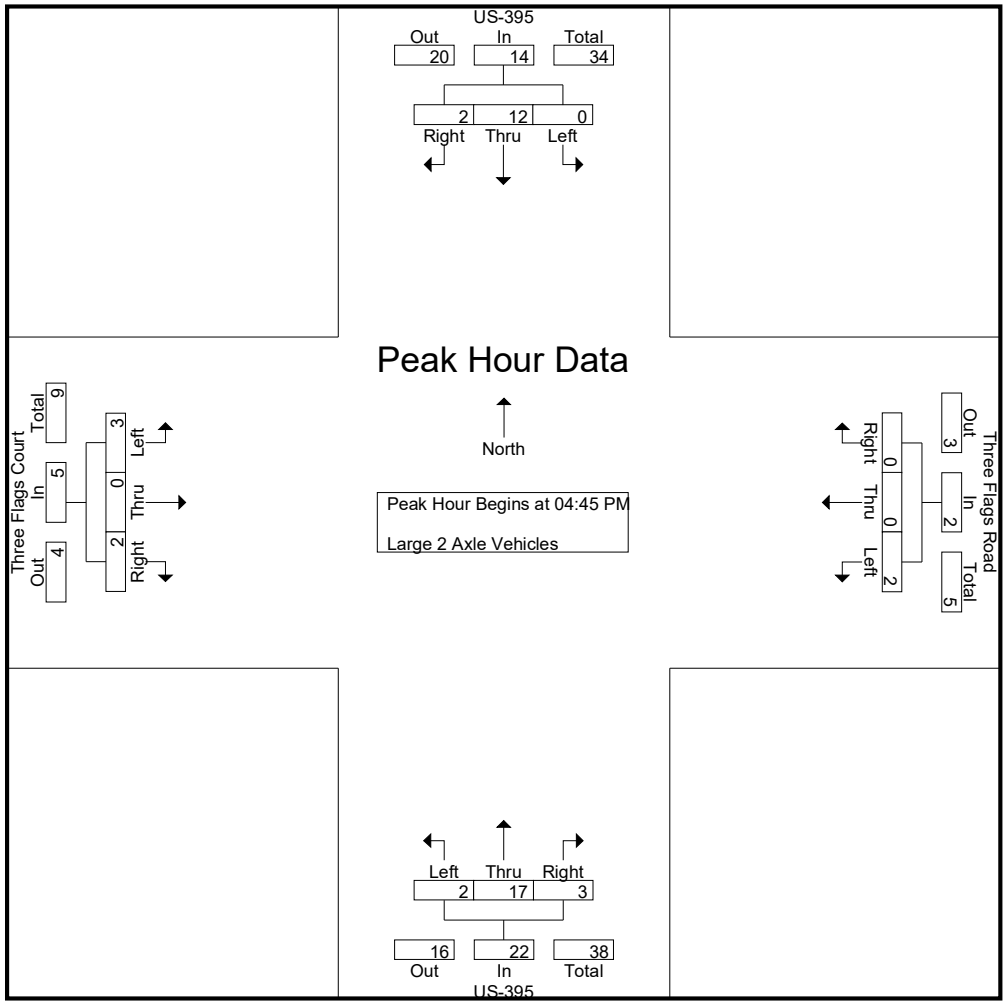

Counts Unlimited, Inc.
PO Box 1178
Corona, CA 92878
(951)268-6268

City of Victorville
N/S: US-395
E/W: Three Flags Court/Three Flags Road
Weather: Clear

File Name : 05_VIC_395_Three PM
Site Code : 05122132
Start Date : 2/16/2022

	US-395 Southbound				Three Flags Road Westbound				US-395 Northbound				Three Flags Court Eastbound				
Start Time	Left	Thru	Right	App. Total	Left	Thru	Right	App. Total	Left	Thru	Right	App. Total	Left	Thru	Right	App. Total	Int. Total
Peak Hour Analysis From 04:45 PM to 05:30 PM - Peak 1 of 1																	
Peak Hour for Each Approach Begins at:																	
	04:45 PM				04:45 PM				04:45 PM				04:45 PM				
+0 mins.	0	3	**1**	**4**	**1**	0	0	**1**	0	4	0	4	**2**	0	**1**	**3**	
+15 mins.	0	3	0	3	0	0	0	0	**1**	4	**2**	**7**	0	0	0	0	
+30 mins.	0	**4**	0	4	1	0	0	1	0	**5**	1	6	1	0	0	1	
+45 mins.	0	2	1	3	0	0	0	0	1	4	0	5	0	0	1	1	
Total Volume	0	12	2	14	2	0	0	2	2	17	3	22	3	0	2	5	
% App. Total	0	85.7	14.3		100	0	0		9.1	77.3	13.6		60	0	40		
PHF	.000	.750	.500	.875	.500	.000	.000	.500	.500	.850	.375	.786	.375	.000	.500	.417	

Counts Unlimited, Inc.
PO Box 1178
Corona, CA 92878
(951)268-6268

City of Victorville
N/S: US-395
E/W: Three Flags Court/Three Flags Road
Weather: Clear

File Name : 05_VIC_395_Three PM
Site Code : 05122132
Start Date : 2/16/2022
Page No : 1

Groups Printed- 3 Axle Vehicles

	US-395 Southbound					Three Flags Road Westbound					US-395 Northbound					Three Flags Court Eastbound							
Start Time	Left	Thru	Right	RTOR	App. Total	Left	Thru	Right	RTOR	App. Total	Left	Thru	Right	RTOR	App. Total	Left	Thru	Right	RTOR	App. Total	Exclu. Total	Inclu. Total	Int. Total
04:00 PM	0	2	0	0	2	0	0	0	0	0	0	2	1	1	3	0	0	0	0	0	1	5	6
04:15 PM	0	0	0	0	0	0	0	0	0	0	0	4	0	0	4	0	0	0	0	0	0	4	4
04:30 PM	1	2	0	0	3	1	0	0	0	1	0	4	0	0	4	0	0	0	0	0	0	8	8
04:45 PM	0	0	0	0	0	4	0	1	0	5	0	0	1	0	1	0	0	0	0	0	0	6	6
Total	1	4	0	0	5	5	0	1	0	6	0	10	2	1	12	0	0	0	0	0	1	23	24
05:00 PM	1	0	0	0	1	2	0	0	0	2	0	0	0	0	0	0	0	0	0	0	0	3	3
05:15 PM	0	1	0	0	1	1	0	1	0	2	0	1	0	0	1	0	0	0	0	0	0	4	4
05:30 PM	0	1	0	0	1	0	1	0	0	1	0	2	1	1	3	0	0	0	0	0	1	5	6
05:45 PM	1	1	0	0	2	1	0	0	0	1	0	2	0	0	2	0	0	0	0	0	0	5	5
Total	2	3	0	0	5	4	1	1	0	6	0	5	1	1	6	0	0	0	0	0	1	17	18
Grand Total	3	7	0	0	10	9	1	2	0	12	0	15	3	2	18	0	0	0	0	0	2	40	42
Apprch %	30	70	0			75	8.3	16.7			0	83.3	16.7			0	0	0					
Total %	7.5	17.5	0		25	22.5	2.5	5		30	0	37.5	7.5		45	0	0	0		0	4.8	95.2	

	US-395 Southbound				Three Flags Road Westbound				US-395 Northbound				Three Flags Court Eastbound				
Start Time	Left	Thru	Right	App. Total	Left	Thru	Right	App. Total	Left	Thru	Right	App. Total	Left	Thru	Right	App. Total	Int. Total
Peak Hour Analysis From 04:45 PM to 05:30 PM - Peak 1 of 1																	
Peak Hour for Entire Intersection Begins at 04:45 PM																	
04:45 PM	0	0	0	0	**4**	0	**1**	**5**	0	0	**1**	1	0	0	0	0	**6**
05:00 PM	**1**	0	0	**1**	2	0	0	2	0	0	0	0	0	0	0	0	3
05:15 PM	0	**1**	0	1	1	0	1	2	0	1	0	1	0	0	0	0	4
05:30 PM	0	1	0	1	0	**1**	0	1	0	**2**	1	**3**	0	0	0	0	5
Total Volume	1	2	0	3	7	1	2	10	0	3	2	5	0	0	0	0	18
% App. Total	33.3	66.7	0		70	10	20		0	60	40		0	0	0		
PHF	.250	.500	.000	.750	.438	.250	.500	.500	.000	.375	.500	.417	.000	.000	.000	.000	.750

Counts Unlimited, Inc.
PO Box 1178
Corona, CA 92878
(951)268-6268

City of Victorville
N/S: US-395
E/W: Three Flags Court/Three Flags Road
Weather: Clear

File Name : 05_VIC_395_Three PM
Site Code : 05122132
Start Date : 2/16/2022
Page No : 2

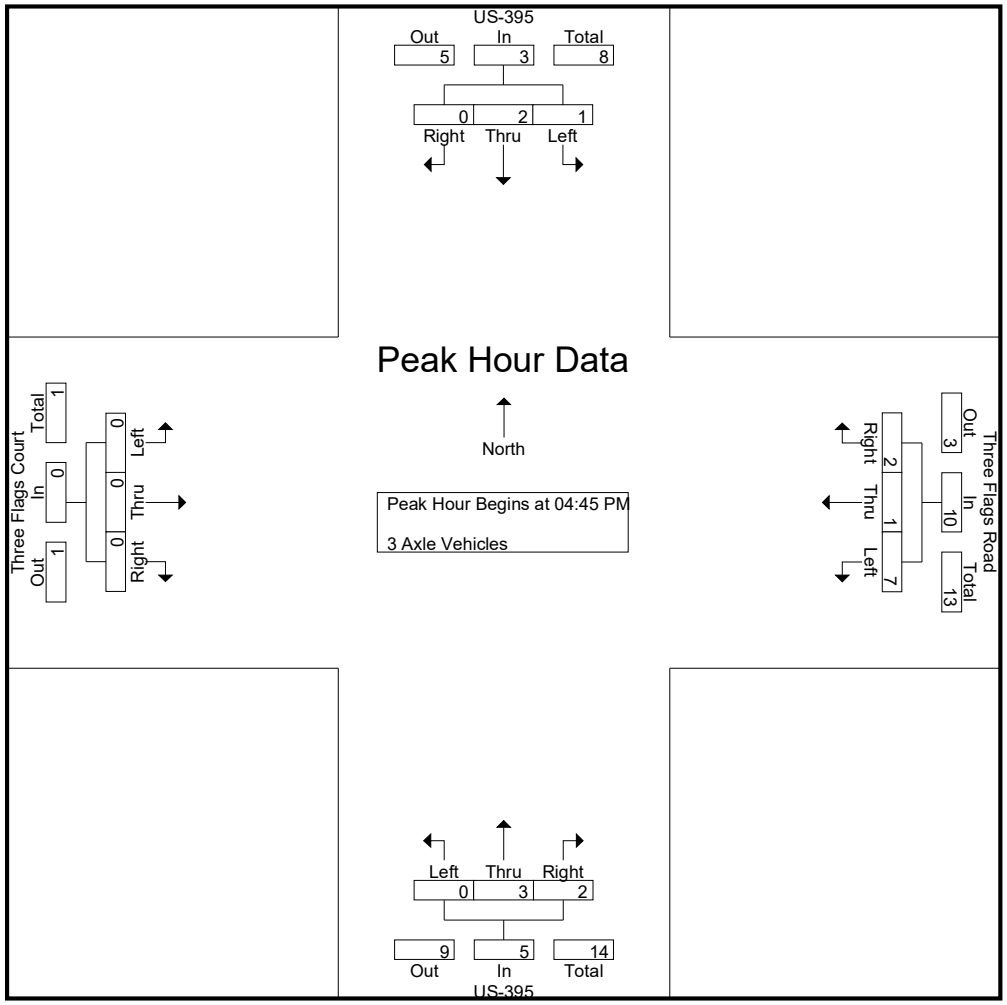

Counts Unlimited, Inc.
PO Box 1178
Corona, CA 92878
(951)268-6268

City of Victorville
N/S: US-395
E/W: Three Flags Court/Three Flags Road
Weather: Clear

File Name : 05_VIC_395_Three PM
Site Code : 05122132
Start Date : 2/16/2022

	US-395 Southbound				Three Flags Road Westbound				US-395 Northbound				Three Flags Court Eastbound				
Start Time	Left	Thru	Right	App. Total	Left	Thru	Right	App. Total	Left	Thru	Right	App. Total	Left	Thru	Right	App. Total	Int. Total
Peak Hour Analysis From 04:45 PM to 05:30 PM - Peak 1 of 1																	
Peak Hour for Each Approach Begins at:																	
	04:45 PM				04:45 PM				04:45 PM				04:45 PM				
+0 mins.	0	0	0	0	**4**	0	**1**	**5**	0	0	**1**	1	0	0	0	0	
+15 mins.	**1**	0	0	**1**	2	0	0	2	0	0	0	0	0	0	0	0	
+30 mins.	0	**1**	0	1	1	0	1	2	0	1	0	1	0	0	0	0	
+45 mins.	0	1	0	1	0	**1**	0	1	0	**2**	1	**3**	0	0	0	0	
Total Volume	1	2	0	3	7	1	2	10	0	3	2	5	0	0	0	0	
% App. Total	33.3	66.7	0		70	10	20		0	60	40		0	0	0		
PHF	.250	.500	.000	.750	.438	.250	.500	.500	.000	.375	.500	.417	.000	.000	.000	.000	

Counts Unlimited, Inc.
PO Box 1178
Corona, CA 92878
(951)268-6268

City of Victorville
N/S: US-395
E/W: Three Flags Court/Three Flags Road
Weather: Clear

File Name : 05_VIC_395_Three PM
Site Code : 05122132
Start Date : 2/16/2022
Page No : 1

Groups Printed- 4+ Axle Trucks

	US-395 Southbound					Three Flags Road Westbound					US-395 Northbound					Three Flags Court Eastbound							
Start Time	Left	Thru	Right	RTOR	App. Total	Left	Thru	Right	RTOR	App. Total	Left	Thru	Right	RTOR	App. Total	Left	Thru	Right	RTOR	App. Total	Exclu. Total	Inclu. Total	Int. Total
04:00 PM	1	7	0	0	8	10	0	2	1	12	0	13	10	3	23	0	0	0	0	0	4	43	47
04:15 PM	1	19	0	0	20	15	0	2	1	17	1	5	13	3	19	0	0	0	0	0	4	56	60
04:30 PM	4	14	0	0	18	11	1	0	0	12	0	13	9	1	22	0	0	0	0	0	1	52	53
04:45 PM	3	7	0	0	10	7	0	5	2	12	0	11	10	2	21	0	0	0	0	0	4	43	47
Total	9	47	0	0	56	43	1	9	4	53	1	42	42	9	85	0	0	0	0	0	13	194	207
05:00 PM	2	12	0	0	14	6	0	3	2	9	0	7	8	2	15	1	0	1	0	2	4	40	44
05:15 PM	3	20	0	0	23	6	0	3	0	9	0	17	8	1	25	0	0	0	0	0	1	57	58
05:30 PM	3	17	0	0	20	8	1	5	2	14	1	12	8	0	21	0	0	0	0	0	2	55	57
05:45 PM	2	17	0	0	19	7	0	3	0	10	0	9	12	1	21	0	1	0	0	1	1	51	52
Total	10	66	0	0	76	27	1	14	4	42	1	45	36	4	82	1	1	1	0	3	8	203	211
Grand Total	19	113	0	0	132	70	2	23	8	95	2	87	78	13	167	1	1	1	0	3	21	397	418
Apprch %	14.4	85.6	0			73.7	2.1	24.2			1.2	52.1	46.7			33.3	33.3	33.3					
Total %	4.8	28.5	0		33.2	17.6	0.5	5.8		23.9	0.5	21.9	19.6		42.1	0.3	0.3	0.3		0.8	5	95	

	US-395 Southbound				Three Flags Road Westbound				US-395 Northbound				Three Flags Court Eastbound				
Start Time	Left	Thru	Right	App. Total	Left	Thru	Right	App. Total	Left	Thru	Right	App. Total	Left	Thru	Right	App. Total	Int. Total
Peak Hour Analysis From 04:45 PM to 05:30 PM - Peak 1 of 1																	
Peak Hour for Entire Intersection Begins at 04:45 PM																	
04:45 PM	**3**	7	0	10	7	0	**5**	12	0	11	**10**	21	0	0	0	0	43
05:00 PM	2	12	0	14	6	0	3	9	0	7	8	15	**1**	0	**1**	**2**	40
05:15 PM	3	**20**	0	**23**	6	0	3	9	0	**17**	8	**25**	0	0	0	0	**57**
05:30 PM	3	17	0	20	**8**	**1**	5	**14**	**1**	12	8	21	0	0	0	0	55
Total Volume	11	56	0	67	27	1	16	44	1	47	34	82	1	0	1	2	195
% App. Total	16.4	83.6	0		61.4	2.3	36.4		1.2	57.3	41.5		50	0	50		
PHF	.917	.700	.000	.728	.844	.250	.800	.786	.250	.691	.850	.820	.250	.000	.250	.250	.855

Counts Unlimited, Inc.
PO Box 1178
Corona, CA 92878
(951)268-6268

City of Victorville
N/S: US-395
E/W: Three Flags Court/Three Flags Road
Weather: Clear

File Name : 05_VIC_395_Three PM
Site Code : 05122132
Start Date : 2/16/2022
Page No : 2

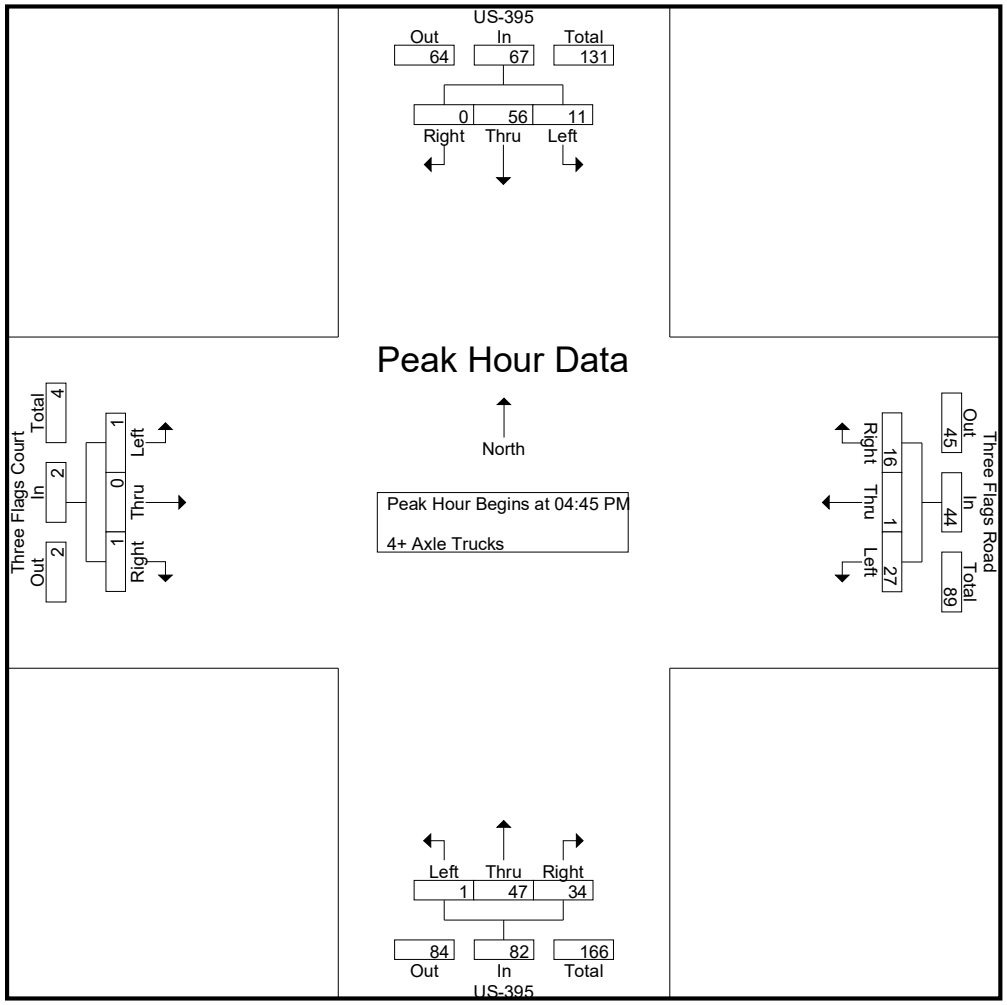

Counts Unlimited, Inc.
PO Box 1178
Corona, CA 92878
(951)268-6268

City of Victorville
N/S: US-395
E/W: Three Flags Court/Three Flags Road
Weather: Clear

File Name : 05_VIC_395_Three PM
Site Code : 05122132
Start Date : 2/16/2022

	US-395 Southbound				Three Flags Road Westbound				US-395 Northbound				Three Flags Court Eastbound				
Start Time	Left	Thru	Right	App. Total	Left	Thru	Right	App. Total	Left	Thru	Right	App. Total	Left	Thru	Right	App. Total	Int. Total
Peak Hour Analysis From 04:45 PM to 05:30 PM - Peak 1 of 1																	
Peak Hour for Each Approach Begins at:																	
	04:45 PM				04:45 PM				04:45 PM				04:45 PM				
+0 mins.	**3**	7	0	10	7	0	**5**	12	0	11	**10**	21	0	0	0	0	
+15 mins.	2	12	0	14	6	0	3	9	0	7	8	15	**1**	0	**1**	**2**	
+30 mins.	3	**20**	0	**23**	6	0	3	9	0	**17**	8	**25**	0	0	0	0	
+45 mins.	3	17	0	20	**8**	**1**	5	**14**	**1**	12	8	21	0	0	0	0	
Total Volume	11	56	0	67	27	1	16	44	1	47	34	82	1	0	1	2	
% App. Total	16.4	83.6	0		61.4	2.3	36.4		1.2	57.3	41.5		50	0	50		
PHF	.917	.700	.000	.728	.844	.250	.800	.786	.250	.691	.850	.820	.250	.000	.250	.250	

Location: Victorville
N/S: US-395
E/W: Three Flags Ct/Three Flags Road

Date: 4/12/2018
Day: Wednesday

PEDESTRIANS

	North Leg US-395	East Leg Three Flags Road	South Leg US-395	West Leg Three Flags Court	
	Pedestrians	Pedestrians	Pedestrians	Pedestrians	
7:00 AM	0	0	0	0	0
7:15 AM	0	0	0	0	0
7:30 AM	0	0	0	0	0
7:45 AM	0	0	0	0	0
8:00 AM	0	0	0	0	0
8:15 AM	0	0	0	0	0
8:30 AM	0	0	0	0	0
8:45 AM	0	0	0	0	0
TOTAL VOLUMES:	0	0	0	0	0

	North Leg US-395	East Leg Three Flags Road	South Leg US-395	West Leg Three Flags Court	
	Pedestrians	Pedestrians	Pedestrians	Pedestrians	
4:00 PM	0	0	0	0	0
4:15 PM	0	0	0	0	0
4:30 PM	0	0	1	1	2
4:45 PM	0	0	0	0	0
5:00 PM	0	0	0	0	0
5:15 PM	0	1	0	0	1
5:30 PM	1	1	0	0	2
5:45 PM	1	0	0	0	1
TOTAL VOLUMES:	2	2	1	1	6

Location: Victorville
N/S: US-395
E/W: Three Flags Ct/Three Flags Road

Date: 4/12/2018
Day: Wednesday

BICYCLES

	Southbound US-395			Westbound Three Flags Road			Northbound US-395			Eastbound Three Flags Court			
	Left	Thru	Right	Left	Thru	Right	Left	Thru	Right	Left	Thru	Right	
7:00 AM	0	0	0	0	0	0	0	0	0	0	0	0	0
7:15 AM	0	0	0	0	0	0	0	0	0	0	0	0	0
7:30 AM	0	0	0	0	0	0	0	0	0	0	0	0	0
7:45 AM	0	0	0	0	0	0	0	0	0	0	0	0	0
8:00 AM	0	0	0	0	0	0	0	0	0	0	0	0	0
8:15 AM	0	0	0	0	0	0	0	0	0	0	0	0	0
8:30 AM	0	0	0	0	0	0	0	0	0	0	0	0	0
8:45 AM	0	0	0	0	0	0	0	0	0	0	0	0	0
TOTAL VOLUMES:	0	0	0	0	0	0	0	0	0	0	0	0	0

	Southbound US-395			Westbound Three Flags Road			Northbound US-395			Eastbound Three Flags Court			
	Left	Thru	Right	Left	Thru	Right	Left	Thru	Right	Left	Thru	Right	
4:00 PM	0	0	0	0	0	0	0	0	0	0	0	0	0
4:15 PM	0	0	0	0	0	0	0	0	0	0	0	0	0
4:30 PM	0	0	0	0	0	0	0	0	0	0	0	0	0
4:45 PM	0	0	0	0	0	0	0	0	0	0	0	0	0
5:00 PM	0	0	0	0	0	0	0	0	0	0	0	0	0
5:15 PM	0	0	0	0	0	0	0	0	0	0	0	0	0
5:30 PM	0	0	0	0	0	0	0	0	0	0	0	0	0
5:45 PM	0	0	0	0	0	0	0	0	0	0	0	0	0
TOTAL VOLUMES:	0	0	0	0	0	0	0	0	0	0	0	0	0

Counts Unlimited, Inc.
PO Box 1178
Corona, CA 92878
951-268-6268

Counts Unlimited, Inc.
PO Box 1178
Corona, CA 92878
(951)268-6268

City of Victorville
N/S: US-395
E/W: Joshua Street
Weather: Clear

File Name : 06_VIC_395_Joshua AM
Site Code : 05122132
Start Date : 2/16/2022
Page No : 1

Groups Printed- Passenger Vehicles - Large 2 Axle Vehicles - 3 Axle Vehicles - 4+ Axle Trucks

	US-395 Southbound					Joshua Street Westbound					US-395 Northbound					Joshua Street Eastbound							
Start Time	Left	Thru	Right	RTOR	App. Total	Left	Thru	Right	RTOR	App. Total	Left	Thru	Right	RTOR	App. Total	Left	Thru	Right	RTOR	App. Total	Exclu. Total	Inclu. Total	Int. Total
07:00 AM	16	219	11	3	246	15	6	14	6	35	1	139	9	6	149	4	7	1	1	12	16	442	458
07:15 AM	16	176	5	2	197	12	5	9	6	26	3	118	4	1	125	6	2	0	0	8	9	356	365
07:30 AM	22	225	8	4	255	16	2	17	8	35	2	172	8	3	182	2	5	1	1	8	16	480	496
07:45 AM	14	189	5	0	208	10	8	19	10	37	0	100	6	3	106	5	4	1	0	10	13	361	374
Total	68	809	29	9	906	53	21	59	30	133	6	529	27	13	562	17	18	3	2	38	54	1639	1693
08:00 AM	17	166	4	1	187	19	3	16	9	38	3	119	4	2	126	3	4	0	0	7	12	358	370
08:15 AM	22	224	7	1	253	23	3	15	8	41	1	95	7	3	103	5	1	2	1	8	13	405	418
08:30 AM	20	178	2	1	200	13	4	20	12	37	2	117	8	7	127	1	5	0	0	6	20	370	390
08:45 AM	10	162	6	0	178	28	2	17	11	47	3	111	8	2	122	3	2	0	0	5	13	352	365
Total	69	730	19	3	818	83	12	68	40	163	9	442	27	14	478	12	12	2	1	26	58	1485	1543
Grand Total	137	1539	48	12	1724	136	33	127	70	296	15	971	54	27	1040	29	30	5	3	64	112	3124	3236
Apprch %	7.9	89.3	2.8			45.9	11.1	42.9			1.4	93.4	5.2			45.3	46.9	7.8					
Total %	4.4	49.3	1.5		55.2	4.4	1.1	4.1		9.5	0.5	31.1	1.7		33.3	0.9	1	0.2		2	3.5	96.5	
Passenger Vehicles	99	1281	42		1433	109	27	94		285	12	775	46		855	27	22	5		57	0	0	2630
% Passenger Vehicles	72.3	83.2	87.5	91.7	82.5	80.1	81.8	74	78.6	77.9	80	79.8	85.2	81.5	80.1	93.1	73.3	100	100	85.1	0	0	81.3
Large 2 Axle Vehicles	4	30	4		39	8	2	2		13	1	39	2		42	2	2	0		4	0	0	98
% Large 2 Axle Vehicles	2.9	1.9	8.3	8.3	2.2	5.9	6.1	1.6	1.4	3.6	6.7	4	3.7	0	3.9	6.9	6.7	0	0	6	0	0	3
3 Axle Vehicles	1	17	1		19	1	0	2		4	0	16	0		16	0	0	0		0	0	0	39
% 3 Axle Vehicles	0.7	1.1	2.1	0	1.1	0.7	0	1.6	1.4	1.1	0	1.6	0	0	1.5	0	0	0	0	0	0	0	1.2
4+ Axle Trucks	33	211	1		245	18	4	29		64	2	141	6		154	0	6	0		6	0	0	469
% 4+ Axle Trucks	24.1	13.7	2.1	0	14.1	13.2	12.1	22.8	18.6	17.5	13.3	14.5	11.1	18.5	14.4	0	20	0	0	9	0	0	14.5

	US-395 Southbound				Joshua Street Westbound				US-395 Northbound				Joshua Street Eastbound				
Start Time	Left	Thru	Right	App. Total	Left	Thru	Right	App. Total	Left	Thru	Right	App. Total	Left	Thru	Right	App. Total	Int. Total
Peak Hour Analysis From 07:00 AM to 08:45 AM - Peak 1 of 1																	
Peak Hour for Entire Intersection Begins at 07:00 AM																	
07:00 AM	16	219	**11**	246	15	6	14	35	1	139	**9**	149	4	**7**	**1**	**12**	442
07:15 AM	16	176	5	197	12	5	9	26	**3**	118	4	125	**6**	2	0	8	356
07:30 AM	**22**	**225**	8	**255**	**16**	2	17	35	2	**172**	8	**182**	2	5	1	8	**480**
07:45 AM	14	189	5	208	10	**8**	**19**	**37**	0	100	6	106	5	4	1	10	361
Total Volume	68	809	29	906	53	21	59	133	6	529	27	562	17	18	3	38	1639
% App. Total	7.5	89.3	3.2		39.8	15.8	44.4		1.1	94.1	4.8		44.7	47.4	7.9		
PHF	.773	.899	.659	.888	.828	.656	.776	.899	.500	.769	.750	.772	.708	.643	.750	.792	.854

Counts Unlimited, Inc.
PO Box 1178
Corona, CA 92878
(951)268-6268

City of Victorville
N/S: US-395
E/W: Joshua Street
Weather: Clear

File Name : 06_VIC_395_Joshua AM
Site Code : 05122132
Start Date : 2/16/2022
Page No : 2

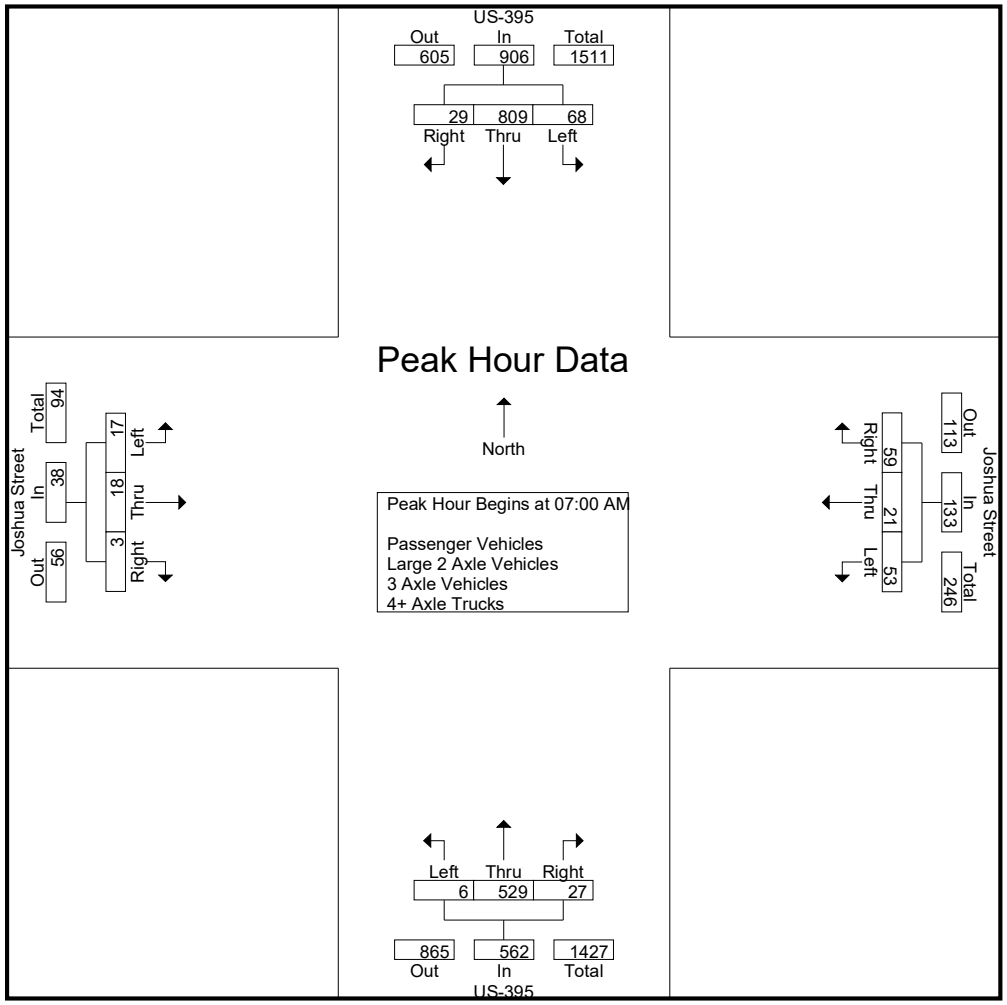

Counts Unlimited, Inc.
PO Box 1178
Corona, CA 92878
(951)268-6268

City of Victorville
N/S: US-395
E/W: Joshua Street
Weather: Clear

File Name : 06_VIC_395_Joshua AM
Site Code : 05122132
Start Date : 2/16/2022
Page No : 3

	US-395 Southbound				Joshua Street Westbound				US-395 Northbound				Joshua Street Eastbound				
Start Time	Left	Thru	Right	App. Total	Left	Thru	Right	App. Total	Left	Thru	Right	App. Total	Left	Thru	Right	App. Total	Int. Total
Peak Hour Analysis From 07:00 AM to 08:45 AM - Peak 1 of 1																	
Peak Hour for Each Approach Begins at:																	
	07:00 AM				08:00 AM				07:00 AM				07:00 AM				
+0 mins.	16	219	**11**	246	19	3	16	38	1	139	**9**	149	4	**7**	**1**	**12**	
+15 mins.	16	176	5	197	23	3	15	41	**3**	118	4	125	**6**	2	0	8	
+30 mins.	**22**	**225**	8	**255**	13	**4**	**20**	37	2	**172**	8	**182**	2	5	1	8	
+45 mins.	14	189	5	208	**28**	2	17	**47**	0	100	6	106	5	4	1	10	
Total Volume	68	809	29	906	83	12	68	163	6	529	27	562	17	18	3	38	
% App. Total	7.5	89.3	3.2		50.9	7.4	41.7		1.1	94.1	4.8		44.7	47.4	7.9		
PHF	.773	.899	.659	.888	.741	.750	.850	.867	.500	.769	.750	.772	.708	.643	.750	.792	

Counts Unlimited, Inc.
PO Box 1178
Corona, CA 92878
(951)268-6268

City of Victorville
N/S: US-395
E/W: Joshua Street
Weather: Clear

File Name : 06_VIC_395_Joshua AM
Site Code : 05122132
Start Date : 2/16/2022
Page No : 1

Groups Printed- Passenger Vehicles

	US-395 Southbound					Joshua Street Westbound					US-395 Northbound					Joshua Street Eastbound							
Start Time	Left	Thru	Right	RTOR	App. Total	Left	Thru	Right	RTOR	App. Total	Left	Thru	Right	RTOR	App. Total	Left	Thru	Right	RTOR	App. Total	Exclu. Total	Inclu. Total	Int. Total
07:00 AM	9	193	11	3	213	8	5	11	5	24	1	110	9	6	120	4	5	1	1	10	15	367	382
07:15 AM	10	152	4	1	166	9	4	6	4	19	3	96	4	1	103	5	2	0	0	7	6	295	301
07:30 AM	17	172	7	4	196	13	2	11	6	26	1	137	6	2	144	2	2	1	1	5	13	371	384
07:45 AM	11	161	4	0	176	8	8	15	8	31	0	71	6	3	77	5	3	1	0	9	11	293	304
Total	47	678	26	8	751	38	19	43	23	100	5	414	25	12	444	16	12	3	2	31	45	1326	1371
08:00 AM	12	132	3	1	147	16	2	12	7	30	2	101	3	2	106	3	4	0	0	7	10	290	300
08:15 AM	17	189	5	1	211	20	1	9	7	30	1	75	6	2	82	4	1	2	1	7	11	330	341
08:30 AM	17	154	2	1	173	13	3	17	9	33	2	95	6	5	103	1	4	0	0	5	15	314	329
08:45 AM	6	128	6	0	140	22	2	13	9	37	2	90	6	1	98	3	1	0	0	4	10	279	289
Total	52	603	16	3	671	71	8	51	32	130	7	361	21	10	389	11	10	2	1	23	46	1213	1259
Grand Total	99	1281	42	11	1422	109	27	94	55	230	12	775	46	22	833	27	22	5	3	54	91	2539	2630
Apprch %	7	90.1	3			47.4	11.7	40.9			1.4	93	5.5			50	40.7	9.3					
Total %	3.9	50.5	1.7		56	4.3	1.1	3.7		9.1	0.5	30.5	1.8		32.8	1.1	0.9	0.2		2.1	3.5	96.5	

	US-395 Southbound				Joshua Street Westbound				US-395 Northbound				Joshua Street Eastbound				
Start Time	Left	Thru	Right	App. Total	Left	Thru	Right	App. Total	Left	Thru	Right	App. Total	Left	Thru	Right	App. Total	Int. Total
Peak Hour Analysis From 07:00 AM to 07:45 AM - Peak 1 of 1																	
Peak Hour for Entire Intersection Begins at 07:00 AM																	
07:00 AM	9	**193**	**11**	**213**	8	5	11	24	1	110	**9**	120	4	**5**	**1**	**10**	367
07:15 AM	10	152	4	166	9	4	6	19	**3**	96	4	103	**5**	2	0	7	295
07:30 AM	**17**	172	7	196	**13**	2	11	26	1	**137**	6	**144**	2	2	1	5	**371**
07:45 AM	11	161	4	176	8	**8**	**15**	**31**	0	71	6	77	5	3	1	9	293
Total Volume	47	678	26	751	38	19	43	100	5	414	25	444	16	12	3	31	1326
% App. Total	6.3	90.3	3.5		38	19	43		1.1	93.2	5.6		51.6	38.7	9.7		
PHF	.691	.878	.591	.881	.731	.594	.717	.806	.417	.755	.694	.771	.800	.600	.750	.775	.894

Counts Unlimited, Inc.
PO Box 1178
Corona, CA 92878
(951)268-6268

City of Victorville
N/S: US-395
E/W: Joshua Street
Weather: Clear

File Name : 06_VIC_395_Joshua AM
Site Code : 05122132
Start Date : 2/16/2022
Page No : 2

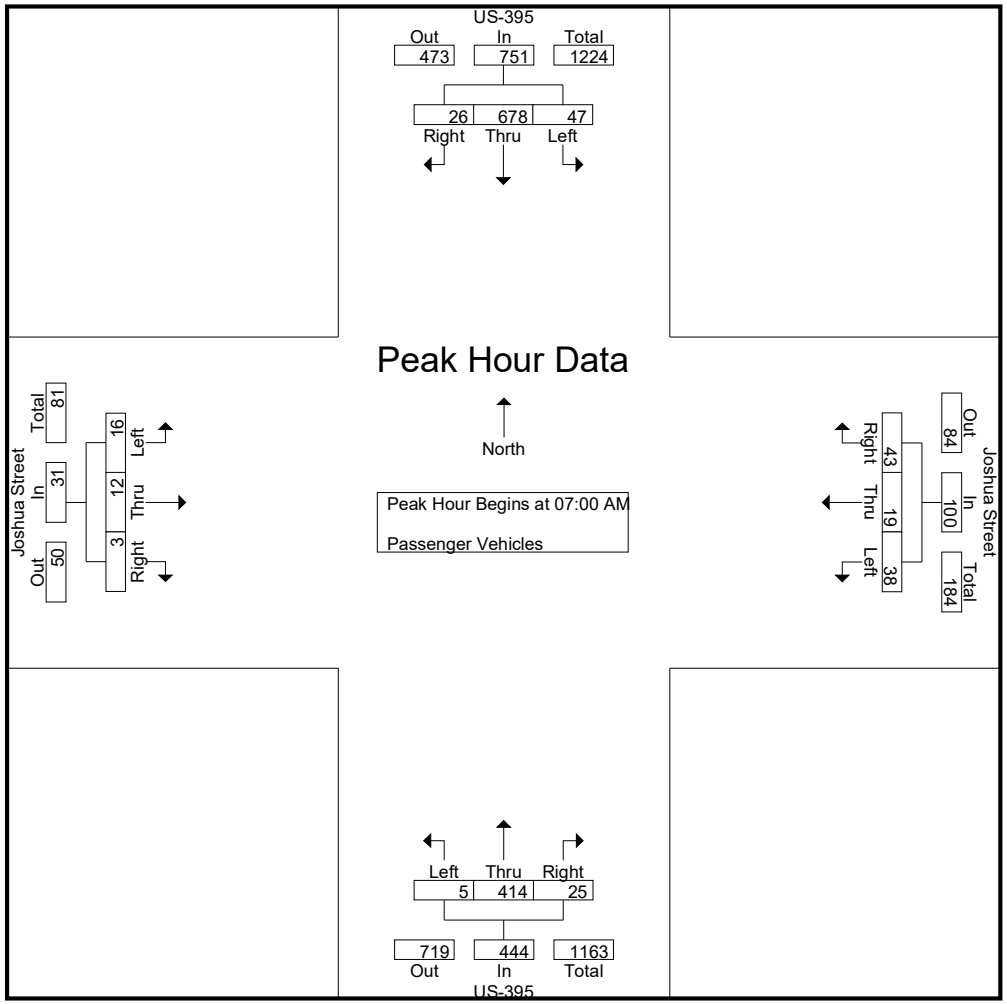

Counts Unlimited, Inc.
PO Box 1178
Corona, CA 92878
(951)268-6268

City of Victorville
N/S: US-395
E/W: Joshua Street
Weather: Clear

File Name : 06_VIC_395_Joshua AM
Site Code : 05122132
Start Date : 2/16/2022
Page No : 3

	US-395 Southbound				Joshua Street Westbound				US-395 Northbound				Joshua Street Eastbound				
Start Time	Left	Thru	Right	App. Total	Left	Thru	Right	App. Total	Left	Thru	Right	App. Total	Left	Thru	Right	App. Total	Int. Total
Peak Hour Analysis From 07:00 AM to 07:45 AM - Peak 1 of 1																	
Peak Hour for Each Approach Begins at:																	
	07:00 AM				07:00 AM				07:00 AM				07:00 AM				
+0 mins.	9	**193**	**11**	**213**	8	5	11	24	1	110	**9**	120	4	**5**	**1**	**10**	
+15 mins.	10	152	4	166	9	4	6	19	**3**	96	4	103	**5**	2	0	7	
+30 mins.	**17**	172	7	196	**13**	2	11	26	1	**137**	6	**144**	2	2	1	5	
+45 mins.	11	161	4	176	8	**8**	**15**	**31**	0	71	6	77	5	3	1	9	
Total Volume	47	678	26	751	38	19	43	100	5	414	25	444	16	12	3	31	
% App. Total	6.3	90.3	3.5		38	19	43		1.1	93.2	5.6		51.6	38.7	9.7		
PHF	.691	.878	.591	.881	.731	.594	.717	.806	.417	.755	.694	.771	.800	.600	.750	.775	

Counts Unlimited, Inc.
PO Box 1178
Corona, CA 92878
(951)268-6268

City of Victorville
N/S: US-395
E/W: Joshua Street
Weather: Clear

File Name : 06_VIC_395_Joshua AM
Site Code : 05122132
Start Date : 2/16/2022
Page No : 1

Groups Printed- Large 2 Axle Vehicles

	US-395 Southbound					Joshua Street Westbound					US-395 Northbound					Joshua Street Eastbound							
Start Time	Left	Thru	Right	RTOR	App. Total	Left	Thru	Right	RTOR	App. Total	Left	Thru	Right	RTOR	App. Total	Left	Thru	Right	RTOR	App. Total	Exclu. Total	Inclu. Total	Int. Total
07:00 AM	1	1	0	0	2	3	1	0	0	4	0	7	0	0	7	0	1	0	0	1	0	14	14
07:15 AM	0	3	1	1	4	0	1	0	0	1	0	4	0	0	4	1	0	0	0	1	1	10	11
07:30 AM	1	9	1	0	11	2	0	0	0	2	1	7	1	0	9	0	0	0	0	0	0	22	22
07:45 AM	0	3	1	0	4	1	0	1	1	2	0	3	0	0	3	0	1	0	0	1	1	10	11
Total	2	16	3	1	21	6	2	1	1	9	1	21	1	0	23	1	2	0	0	3	2	56	58
08:00 AM	1	8	0	0	9	1	0	1	0	2	0	4	1	0	5	0	0	0	0	0	0	16	16
08:15 AM	0	0	1	0	1	0	0	0	0	0	0	4	0	0	4	1	0	0	0	1	0	6	6
08:30 AM	1	4	0	0	5	0	0	0	0	0	0	6	0	0	6	0	0	0	0	0	0	11	11
08:45 AM	0	2	0	0	2	1	0	0	0	1	0	4	0	0	4	0	0	0	0	0	0	7	7
Total	2	14	1	0	17	2	0	1	0	3	0	18	1	0	19	1	0	0	0	1	0	40	40
Grand Total	4	30	4	1	38	8	2	2	1	12	1	39	2	0	42	2	2	0	0	4	2	96	98
Apprch %	10.5	78.9	10.5			66.7	16.7	16.7			2.4	92.9	4.8			50	50	0					
Total %	4.2	31.2	4.2		39.6	8.3	2.1	2.1		12.5	1	40.6	2.1		43.8	2.1	2.1	0		4.2	2	98	

	US-395 Southbound				Joshua Street Westbound				US-395 Northbound				Joshua Street Eastbound				
Start Time	Left	Thru	Right	App. Total	Left	Thru	Right	App. Total	Left	Thru	Right	App. Total	Left	Thru	Right	App. Total	Int. Total
Peak Hour Analysis From 07:00 AM to 07:45 AM - Peak 1 of 1																	
Peak Hour for Entire Intersection Begins at 07:00 AM																	
07:00 AM	**1**	1	0	2	**3**	**1**	0	**4**	0	**7**	0	7	0	**1**	0	**1**	14
07:15 AM	0	3	**1**	4	0	1	0	1	0	4	0	4	**1**	0	0	1	10
07:30 AM	1	**9**	1	**11**	2	0	0	2	**1**	7	**1**	**9**	0	0	0	0	**22**
07:45 AM	0	3	1	4	1	0	**1**	2	0	3	0	3	0	1	0	1	10
Total Volume	2	16	3	21	6	2	1	9	1	21	1	23	1	2	0	3	56
% App. Total	9.5	76.2	14.3		66.7	22.2	11.1		4.3	91.3	4.3		33.3	66.7	0		
PHF	.500	.444	.750	.477	.500	.500	.250	.563	.250	.750	.250	.639	.250	.500	.000	.750	.636

Counts Unlimited, Inc.
PO Box 1178
Corona, CA 92878
(951)268-6268

City of Victorville
N/S: US-395
E/W: Joshua Street
Weather: Clear

File Name : 06_VIC_395_Joshua AM
Site Code : 05122132
Start Date : 2/16/2022
Page No : 2

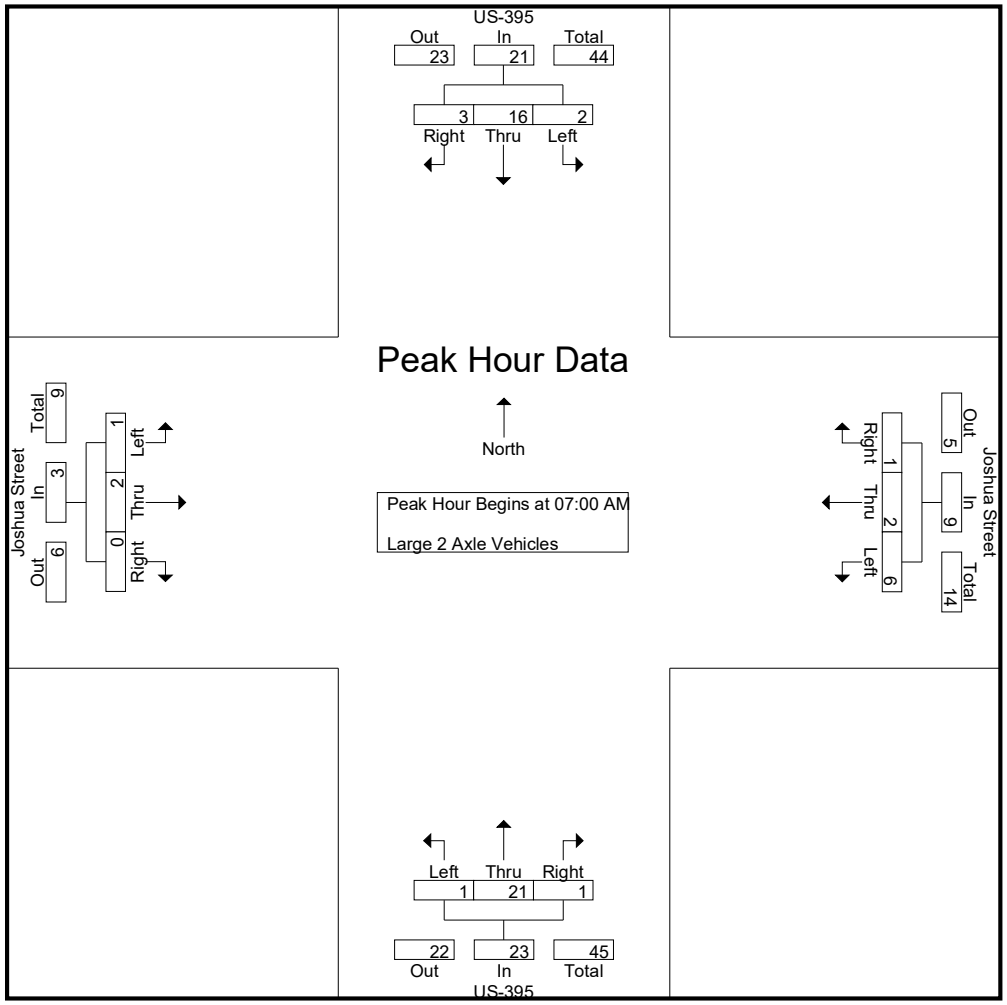

Counts Unlimited, Inc.
PO Box 1178
Corona, CA 92878
(951)268-6268

City of Victorville
N/S: US-395
E/W: Joshua Street
Weather: Clear

File Name : 06_VIC_395_Joshua AM
Site Code : 05122132
Start Date : 2/16/2022
Page No : 3

	US-395 Southbound				Joshua Street Westbound				US-395 Northbound				Joshua Street Eastbound				
Start Time	Left	Thru	Right	App. Total	Left	Thru	Right	App. Total	Left	Thru	Right	App. Total	Left	Thru	Right	App. Total	Int. Total
Peak Hour Analysis From 07:00 AM to 07:45 AM - Peak 1 of 1																	
Peak Hour for Each Approach Begins at:																	
	07:00 AM				07:00 AM				07:00 AM				07:00 AM				
+0 mins.	**1**	1	0	2	**3**	**1**	0	**4**	0	**7**	0	7	0	**1**	0	**1**	
+15 mins.	0	3	**1**	4	0	1	0	1	0	4	0	4	**1**	0	0	1	
+30 mins.	1	**9**	1	**11**	2	0	0	2	**1**	7	**1**	**9**	0	0	0	0	
+45 mins.	0	3	1	4	1	0	**1**	2	0	3	0	3	0	1	0	1	
Total Volume	2	16	3	21	6	2	1	9	1	21	1	23	1	2	0	3	
% App. Total	9.5	76.2	14.3		66.7	22.2	11.1		4.3	91.3	4.3		33.3	66.7	0		
PHF	.500	.444	.750	.477	.500	.500	.250	.563	.250	.750	.250	.639	.250	.500	.000	.750	

Counts Unlimited, Inc.
PO Box 1178
Corona, CA 92878
(951)268-6268

City of Victorville
N/S: US-395
E/W: Joshua Street
Weather: Clear

File Name : 06_VIC_395_Joshua AM
Site Code : 05122132
Start Date : 2/16/2022
Page No : 1

Groups Printed- 3 Axle Vehicles

	US-395 Southbound					Joshua Street Westbound					US-395 Northbound					Joshua Street Eastbound							
Start Time	Left	Thru	Right	RTOR	App. Total	Left	Thru	Right	RTOR	App. Total	Left	Thru	Right	RTOR	App. Total	Left	Thru	Right	RTOR	App. Total	Exclu. Total	Inclu. Total	Int. Total
07:00 AM	1	0	0	0	1	0	0	0	0	0	0	6	0	0	6	0	0	0	0	0	0	7	7
07:15 AM	0	3	0	0	3	1	0	0	0	1	0	0	0	0	0	0	0	0	0	0	0	4	4
07:30 AM	0	4	0	0	4	0	0	0	0	0	0	3	0	0	3	0	0	0	0	0	0	7	7
07:45 AM	0	3	0	0	3	0	0	0	0	0	0	0	0	0	0	0	0	0	0	0	0	3	3
Total	1	10	0	0	11	1	0	0	0	1	0	9	0	0	9	0	0	0	0	0	0	21	21
08:00 AM	0	1	1	0	2	0	0	0	0	0	0	3	0	0	3	0	0	0	0	0	0	5	5
08:15 AM	0	2	0	0	2	0	0	1	0	1	0	1	0	0	1	0	0	0	0	0	0	4	4
08:30 AM	0	1	0	0	1	0	0	1	1	1	0	2	0	0	2	0	0	0	0	0	1	4	5
08:45 AM	0	3	0	0	3	0	0	0	0	0	0	1	0	0	1	0	0	0	0	0	0	4	4
Total	0	7	1	0	8	0	0	2	1	2	0	7	0	0	7	0	0	0	0	0	1	17	18
Grand Total	1	17	1	0	19	1	0	2	1	3	0	16	0	0	16	0	0	0	0	0	1	38	39
Apprch %	5.3	89.5	5.3			33.3	0	66.7			0	100	0			0	0	0					
Total %	2.6	44.7	2.6		50	2.6	0	5.3		7.9	0	42.1	0		42.1	0	0	0		0	2.6	97.4	

	US-395 Southbound				Joshua Street Westbound				US-395 Northbound				Joshua Street Eastbound				
Start Time	Left	Thru	Right	App. Total	Left	Thru	Right	App. Total	Left	Thru	Right	App. Total	Left	Thru	Right	App. Total	Int. Total
Peak Hour Analysis From 07:00 AM to 07:45 AM - Peak 1 of 1																	
Peak Hour for Entire Intersection Begins at 07:00 AM																	
07:00 AM	**1**	0	0	1	0	0	0	0	0	**6**	0	**6**	0	0	0	0	**7**
07:15 AM	0	3	0	3	**1**	0	0	**1**	0	0	0	0	0	0	0	0	4
07:30 AM	0	**4**	0	**4**	0	0	0	0	0	3	0	3	0	0	0	0	7
07:45 AM	0	3	0	3	0	0	0	0	0	0	0	0	0	0	0	0	3
Total Volume	1	10	0	11	1	0	0	1	0	9	0	9	0	0	0	0	21
% App. Total	9.1	90.9	0		100	0	0		0	100	0		0	0	0		
PHF	.250	.625	.000	.688	.250	.000	.000	.250	.000	.375	.000	.375	.000	.000	.000	.000	.750

Counts Unlimited, Inc.
PO Box 1178
Corona, CA 92878
(951)268-6268

City of Victorville
N/S: US-395
E/W: Joshua Street
Weather: Clear

File Name : 06_VIC_395_Joshua AM
Site Code : 05122132
Start Date : 2/16/2022
Page No : 2

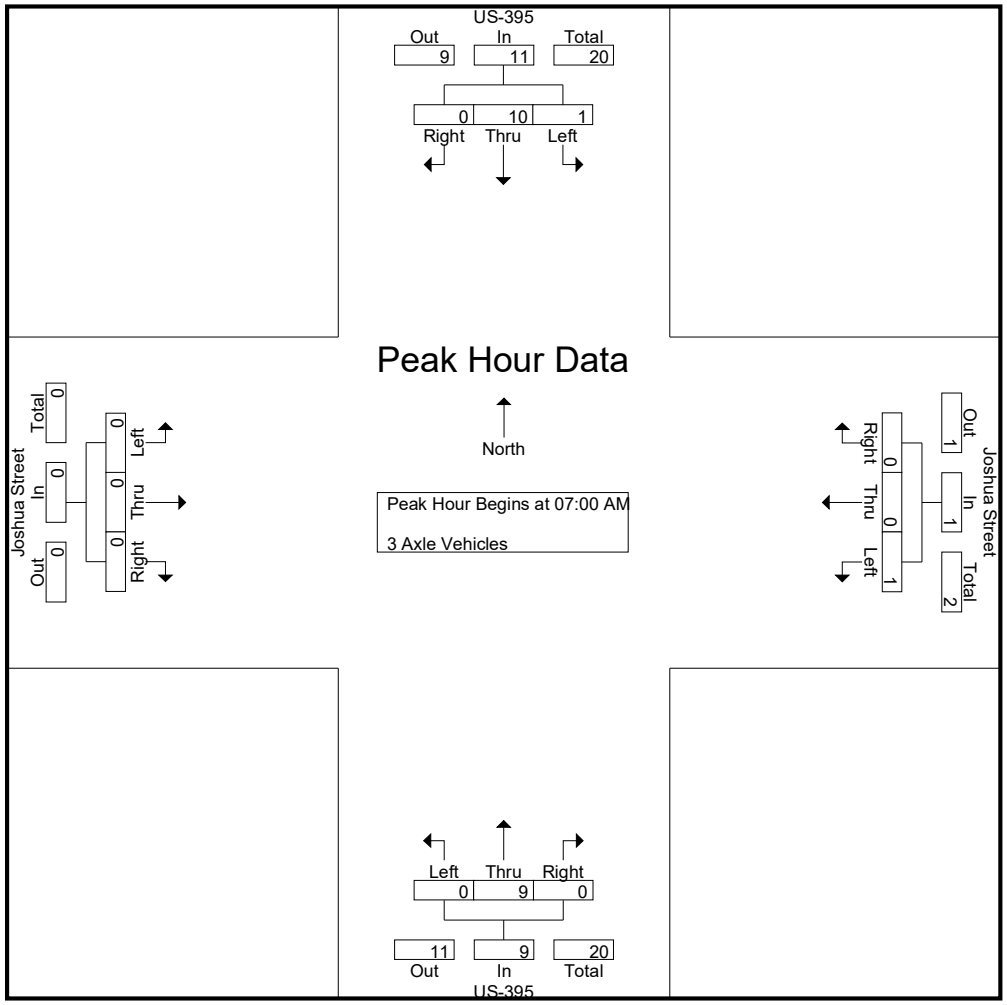

Counts Unlimited, Inc.
PO Box 1178
Corona, CA 92878
(951)268-6268

City of Victorville
N/S: US-395
E/W: Joshua Street
Weather: Clear

File Name : 06_VIC_395_Joshua AM
Site Code : 05122132
Start Date : 2/16/2022
Page No : 3

	US-395 Southbound				Joshua Street Westbound				US-395 Northbound				Joshua Street Eastbound				
Start Time	Left	Thru	Right	App. Total	Left	Thru	Right	App. Total	Left	Thru	Right	App. Total	Left	Thru	Right	App. Total	Int. Total
Peak Hour Analysis From 07:00 AM to 07:45 AM - Peak 1 of 1																	
Peak Hour for Each Approach Begins at:																	
	07:00 AM				07:00 AM				07:00 AM				07:00 AM				
+0 mins.	**1**	0	0	1	0	0	0	0	0	**6**	0	**6**	0	0	0	0	
+15 mins.	0	3	0	3	**1**	0	0	**1**	0	0	0	0	0	0	0	0	
+30 mins.	0	**4**	0	**4**	0	0	0	0	0	3	0	3	0	0	0	0	
+45 mins.	0	3	0	3	0	0	0	0	0	0	0	0	0	0	0	0	
Total Volume	1	10	0	11	1	0	0	1	0	9	0	9	0	0	0	0	0
% App. Total	9.1	90.9	0		100	0	0		0	100	0		0	0	0		
PHF	.250	.625	.000	.688	.250	.000	.000	.250	.000	.375	.000	.375	.000	.000	.000	.000	

Counts Unlimited, Inc.
PO Box 1178
Corona, CA 92878
(951)268-6268

City of Victorville
N/S: US-395
E/W: Joshua Street
Weather: Clear

File Name : 06_VIC_395_Joshua AM
Site Code : 05122132
Start Date : 2/16/2022
Page No : 1

Groups Printed- 4+ Axle Trucks

	US-395 Southbound					Joshua Street Westbound					US-395 Northbound					Joshua Street Eastbound							
Start Time	Left	Thru	Right	RTOR	App. Total	Left	Thru	Right	RTOR	App. Total	Left	Thru	Right	RTOR	App. Total	Left	Thru	Right	RTOR	App. Total	Exclu. Total	Inclu. Total	Int. Total
07:00 AM	5	25	0	0	30	4	0	3	1	7	0	16	0	0	16	0	1	0	0	1	1	54	55
07:15 AM	6	18	0	0	24	2	0	3	2	5	0	18	0	0	18	0	0	0	0	0	2	47	49
07:30 AM	4	40	0	0	44	1	0	6	2	7	0	25	1	1	26	0	3	0	0	3	3	80	83
07:45 AM	3	22	0	0	25	1	0	3	1	4	0	26	0	0	26	0	0	0	0	0	1	55	56
Total	18	105	0	0	123	8	0	15	6	23	0	85	1	1	86	0	4	0	0	4	7	236	243
08:00 AM	4	25	0	0	29	2	1	3	2	6	1	11	0	0	12	0	0	0	0	0	2	47	49
08:15 AM	5	33	1	0	39	3	2	5	1	10	0	15	1	1	16	0	0	0	0	0	2	65	67
08:30 AM	2	19	0	0	21	0	1	2	2	3	0	14	2	2	16	0	1	0	0	1	4	41	45
08:45 AM	4	29	0	0	33	5	0	4	2	9	1	16	2	1	19	0	1	0	0	1	3	62	65
Total	15	106	1	0	122	10	4	14	7	28	2	56	5	4	63	0	2	0	0	2	11	215	226
Grand Total	33	211	1	0	245	18	4	29	13	51	2	141	6	5	149	0	6	0	0	6	18	451	469
Apprch %	13.5	86.1	0.4			35.3	7.8	56.9			1.3	94.6	4			0	100	0					
Total %	7.3	46.8	0.2		54.3	4	0.9	6.4		11.3	0.4	31.3	1.3		33	0	1.3	0		1.3	3.8	96.2	

	US-395 Southbound				Joshua Street Westbound				US-395 Northbound				Joshua Street Eastbound				
Start Time	Left	Thru	Right	App. Total	Left	Thru	Right	App. Total	Left	Thru	Right	App. Total	Left	Thru	Right	App. Total	Int. Total
Peak Hour Analysis From 07:00 AM to 07:45 AM - Peak 1 of 1																	
Peak Hour for Entire Intersection Begins at 07:00 AM																	
07:00 AM	5	25	0	30	**4**	0	3	**7**	0	16	0	16	0	1	0	1	54
07:15 AM	**6**	18	0	24	2	0	3	5	0	18	0	18	0	0	0	0	47
07:30 AM	4	**40**	0	**44**	1	0	**6**	7	0	25	**1**	**26**	0	**3**	0	**3**	**80**
07:45 AM	3	22	0	25	1	0	3	4	0	**26**	0	26	0	0	0	0	55
Total Volume	18	105	0	123	8	0	15	23	0	85	1	86	0	4	0	4	236
% App. Total	14.6	85.4	0		34.8	0	65.2		0	98.8	1.2		0	100	0		
PHF	.750	.656	.000	.699	.500	.000	.625	.821	.000	.817	.250	.827	.000	.333	.000	.333	.738

Counts Unlimited, Inc.
PO Box 1178
Corona, CA 92878
(951)268-6268

City of Victorville
N/S: US-395
E/W: Joshua Street
Weather: Clear

File Name : 06_VIC_395_Joshua AM
Site Code : 05122132
Start Date : 2/16/2022
Page No : 2

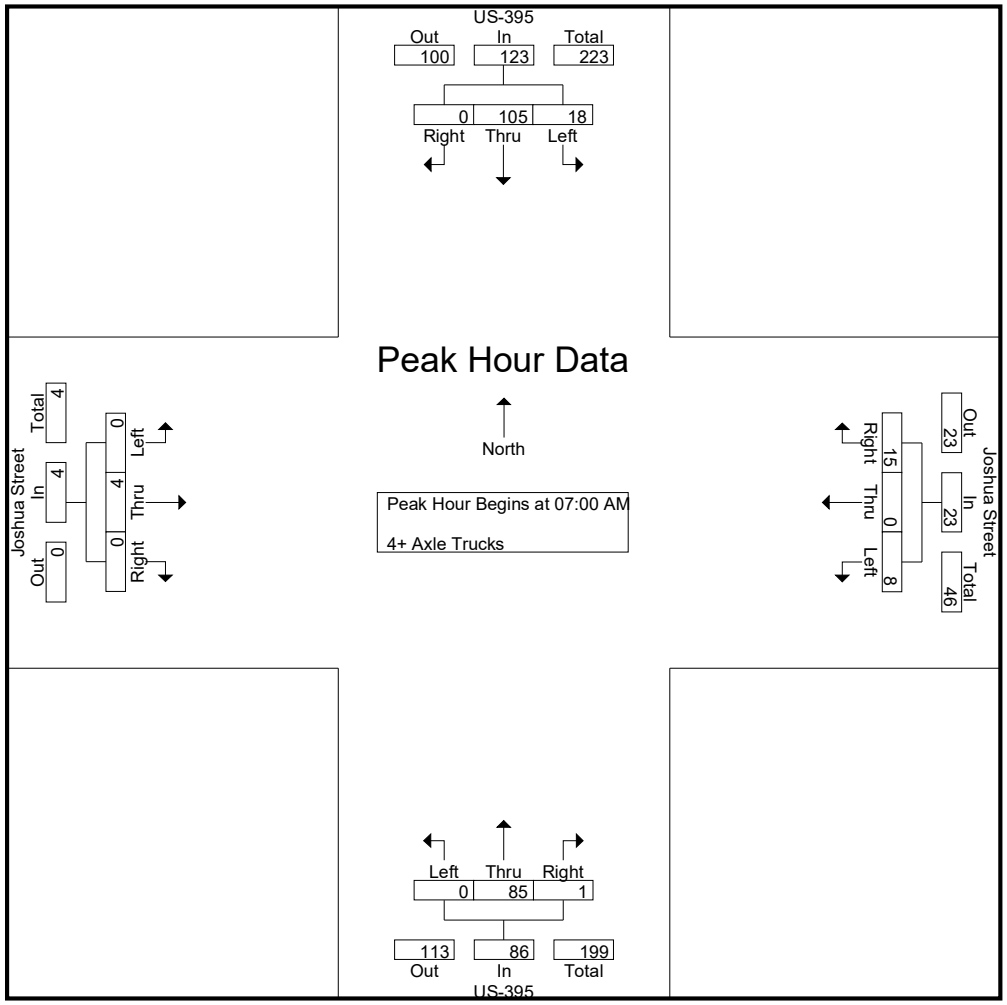

Counts Unlimited, Inc.
PO Box 1178
Corona, CA 92878
(951)268-6268

City of Victorville
N/S: US-395
E/W: Joshua Street
Weather: Clear

File Name : 06_VIC_395_Joshua AM
Site Code : 05122132
Start Date : 2/16/2022
Page No : 3

	US-395 Southbound				Joshua Street Westbound				US-395 Northbound				Joshua Street Eastbound				
Start Time	Left	Thru	Right	App. Total	Left	Thru	Right	App. Total	Left	Thru	Right	App. Total	Left	Thru	Right	App. Total	Int. Total
Peak Hour Analysis From 07:00 AM to 07:45 AM - Peak 1 of 1																	
Peak Hour for Each Approach Begins at:																	
	07:00 AM				07:00 AM				07:00 AM				07:00 AM				
+0 mins.	5	25	0	30	**4**	0	3	**7**	0	16	0	16	0	1	0	1	
+15 mins.	**6**	18	0	24	2	0	3	5	0	18	0	18	0	0	0	0	
+30 mins.	4	**40**	0	**44**	1	0	**6**	7	0	25	**1**	**26**	0	**3**	0	**3**	
+45 mins.	3	22	0	25	1	0	3	4	0	**26**	0	26	0	0	0	0	
Total Volume	18	105	0	123	8	0	15	23	0	85	1	86	0	4	0	4	
% App. Total	14.6	85.4	0		34.8	0	65.2		0	98.8	1.2		0	100	0		
PHF	.750	.656	.000	.699	.500	.000	.625	.821	.000	.817	.250	.827	.000	.333	.000	.333	

Counts Unlimited, Inc.
PO Box 1178
Corona, CA 92878
(951)268-6268

City of Victorville
N/S: US-395
E/W: Joshua Street
Weather: Clear

File Name : 06_VIC_395_Joshua PM
Site Code : 05122132
Start Date : 2/16/2022
Page No : 1

Groups Printed- Passenger Vehicles - Large 2 Axle Vehicles - 3 Axle Vehicles - 4+ Axle Trucks

	US-395 Southbound					Joshua Street Westbound					US-395 Northbound					Joshua Street Eastbound							
Start Time	Left	Thru	Right	RTOR	App. Total	Left	Thru	Right	RTOR	App. Total	Left	Thru	Right	RTOR	App. Total	Left	Thru	Right	RTOR	App. Total	Exclu. Total	Inclu. Total	Int. Total
04:00 PM	15	172	8	2	195	24	5	28	7	57	1	241	16	5	258	8	8	3	0	19	14	529	543
04:15 PM	15	175	6	2	196	14	4	20	9	38	7	227	17	8	251	8	11	1	0	20	19	505	524
04:30 PM	21	182	6	2	209	10	2	34	22	46	5	213	23	6	241	12	11	1	1	24	31	520	551
04:45 PM	17	146	3	1	166	17	6	30	13	53	5	223	17	6	245	8	18	1	0	27	20	491	511
Total	68	675	23	7	766	65	17	112	51	194	18	904	73	25	995	36	48	6	1	90	84	2045	2129
05:00 PM	27	157	12	5	196	13	8	30	16	51	5	194	13	6	212	8	14	3	1	25	28	484	512
05:15 PM	13	180	5	1	198	15	5	17	10	37	5	233	19	9	257	13	5	1	0	19	20	511	531
05:30 PM	17	178	2	0	197	17	5	21	7	43	1	275	16	5	292	25	16	5	1	46	13	578	591
05:45 PM	11	124	1	1	136	8	4	16	9	28	3	238	10	4	251	7	8	1	0	16	14	431	445
Total	68	639	20	7	727	53	22	84	42	159	14	940	58	24	1012	53	43	10	2	106	75	2004	2079
Grand Total	136	1314	43	14	1493	118	39	196	93	353	32	1844	131	49	2007	89	91	16	3	196	159	4049	4208
Apprch %	9.1	88	2.9			33.4	11	55.5			1.6	91.9	6.5			45.4	46.4	8.2					
Total %	3.4	32.5	1.1		36.9	2.9	1	4.8		8.7	0.8	45.5	3.2		49.6	2.2	2.2	0.4		4.8	3.8	96.2	
Passenger Vehicles	94	1114	41		1263	108	36	161		387	30	1644	101		1814	83	88	16		190	0	0	3654
% Passenger Vehicles	69.1	84.8	95.3	100	83.8	91.5	92.3	82.1	88.2	86.8	93.8	89.2	77.1	79.6	88.2	93.3	96.7	100	100	95.5	0	0	86.8
Large 2 Axle Vehicles	3	32	2		37	1	2	7		11	2	48	6		58	3	2	0		5	0	0	111
% Large 2 Axle Vehicles	2.2	2.4	4.7	0	2.5	0.8	5.1	3.6	1.1	2.5	6.2	2.6	4.6	4.1	2.8	3.4	2.2	0	0	2.5	0	0	2.6
3 Axle Vehicles	2	13	0		15	1	0	3		6	0	14	0		14	1	1	0		2	0	0	37
% 3 Axle Vehicles	1.5	1	0	0	1	0.8	0	1.5	2.2	1.3	0	0.8	0	0	0.7	1.1	1.1	0	0	1	0	0	0.9
4+ Axle Trucks	37	155	0		192	8	1	25		42	0	138	24		170	2	0	0		2	0	0	406
% 4+ Axle Trucks	27.2	11.8	0	0	12.7	6.8	2.6	12.8	8.6	9.4	0	7.5	18.3	16.3	8.3	2.2	0	0	0	1	0	0	9.6

	US-395 Southbound				Joshua Street Westbound				US-395 Northbound				Joshua Street Eastbound				
Start Time	Left	Thru	Right	App. Total	Left	Thru	Right	App. Total	Left	Thru	Right	App. Total	Left	Thru	Right	App. Total	Int. Total
Peak Hour Analysis From 04:00 PM to 05:45 PM - Peak 1 of 1																	
Peak Hour for Entire Intersection Begins at 04:45 PM																	
04:45 PM	17	146	3	166	**17**	6	**30**	**53**	**5**	223	17	245	8	**18**	1	27	491
05:00 PM	**27**	157	**12**	196	13	**8**	30	51	5	194	13	212	8	14	3	25	484
05:15 PM	13	**180**	5	**198**	15	5	17	37	5	233	**19**	257	13	5	1	19	511
05:30 PM	17	178	2	197	17	5	21	43	1	**275**	16	**292**	**25**	16	**5**	**46**	**578**
Total Volume	74	661	22	757	62	24	98	184	16	925	65	1006	54	53	10	117	2064
% App. Total	9.8	87.3	2.9		33.7	13	53.3		1.6	91.9	6.5		46.2	45.3	8.5		
PHF	.685	.918	.458	.956	.912	.750	.817	.868	.800	.841	.855	.861	.540	.736	.500	.636	.893

Counts Unlimited, Inc.
PO Box 1178
Corona, CA 92878
(951)268-6268

City of Victorville
N/S: US-395
E/W: Joshua Street
Weather: Clear

File Name : 06_VIC_395_Joshua PM
Site Code : 05122132
Start Date : 2/16/2022
Page No : 2

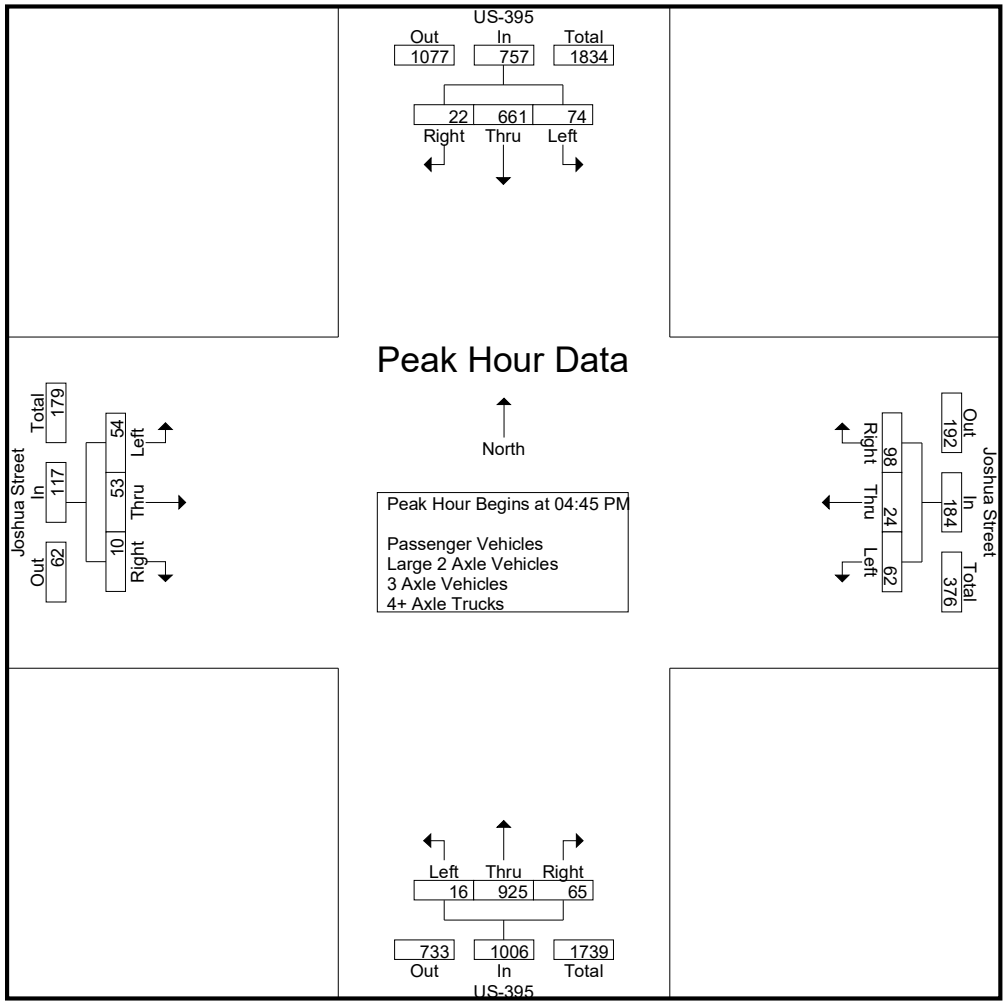

Counts Unlimited, Inc.
PO Box 1178
Corona, CA 92878
(951)268-6268

City of Victorville
N/S: US-395
E/W: Joshua Street
Weather: Clear

File Name : 06_VIC_395_Joshua PM
Site Code : 05122132
Start Date : 2/16/2022
Page No : 3

	US-395 Southbound				Joshua Street Westbound				US-395 Northbound				Joshua Street Eastbound				
Start Time	Left	Thru	Right	App. Total	Left	Thru	Right	App. Total	Left	Thru	Right	App. Total	Left	Thru	Right	App. Total	Int. Total
Peak Hour Analysis From 04:00 PM to 05:45 PM - Peak 1 of 1																	
Peak Hour for Each Approach Begins at:																	
	04:30 PM				04:00 PM				05:00 PM				04:45 PM				
+0 mins.	21	**182**	6	**209**	**24**	5	28	**57**	**5**	194	13	212	8	**18**	1	27	
+15 mins.	17	146	3	166	14	4	20	38	5	233	**19**	257	8	14	3	25	
+30 mins.	**27**	157	**12**	196	10	2	**34**	46	1	**275**	16	**292**	13	5	1	19	
+45 mins.	13	180	5	198	17	**6**	30	53	3	238	10	251	**25**	16	**5**	**46**	
Total Volume	78	665	26	769	65	17	112	194	14	940	58	1012	54	53	10	117	
% App. Total	10.1	86.5	3.4		33.5	8.8	57.7		1.4	92.9	5.7		46.2	45.3	8.5		
PHF	.722	.913	.542	.920	.677	.708	.824	.851	.700	.855	.763	.866	.540	.736	.500	.636	

Counts Unlimited, Inc.
PO Box 1178
Corona, CA 92878
(951)268-6268

City of Victorville
N/S: US-395
E/W: Joshua Street
Weather: Clear

File Name : 06_VIC_395_Joshua PM
Site Code : 05122132
Start Date : 2/16/2022
Page No : 1

Groups Printed- Passenger Vehicles

	US-395 Southbound					Joshua Street Westbound					US-395 Northbound					Joshua Street Eastbound							
Start Time	Left	Thru	Right	RTOR	App. Total	Left	Thru	Right	RTOR	App. Total	Left	Thru	Right	RTOR	App. Total	Left	Thru	Right	RTOR	App. Total	Exclu. Total	Inclu. Total	Int. Total
04:00 PM	12	147	8	2	167	21	4	22	7	47	1	209	13	4	223	6	7	3	0	16	13	453	466
04:15 PM	9	142	5	2	156	14	4	15	7	33	6	206	14	6	226	8	10	1	0	19	15	434	449
04:30 PM	13	160	6	2	179	9	1	30	20	40	5	187	17	5	209	11	10	1	1	22	28	450	478
04:45 PM	12	127	2	1	141	16	6	25	13	47	5	205	13	6	223	8	18	1	0	27	20	438	458
Total	46	576	21	7	643	60	15	92	47	167	17	807	57	21	881	33	45	6	1	84	76	1775	1851
05:00 PM	21	139	12	5	172	13	7	28	15	48	4	171	10	4	185	6	14	3	1	23	25	428	453
05:15 PM	8	151	5	1	164	14	5	15	9	34	5	205	13	8	223	13	5	1	0	19	18	440	458
05:30 PM	13	150	2	0	165	13	5	16	5	34	1	245	14	3	260	24	16	5	1	45	9	504	513
05:45 PM	6	98	1	1	105	8	4	10	6	22	3	216	7	3	226	7	8	1	0	16	10	369	379
Total	48	538	20	7	606	48	21	69	35	138	13	837	44	18	894	50	43	10	2	103	62	1741	1803
Grand Total	94	1114	41	14	1249	108	36	161	82	305	30	1644	101	39	1775	83	88	16	3	187	138	3516	3654
Apprch %	7.5	89.2	3.3			35.4	11.8	52.8			1.7	92.6	5.7			44.4	47.1	8.6					
Total %	2.7	31.7	1.2		35.5	3.1	1	4.6		8.7	0.9	46.8	2.9		50.5	2.4	2.5	0.5		5.3	3.8	96.2	

	US-395 Southbound				Joshua Street Westbound				US-395 Northbound				Joshua Street Eastbound				
Start Time	Left	Thru	Right	App. Total	Left	Thru	Right	App. Total	Left	Thru	Right	App. Total	Left	Thru	Right	App. Total	Int. Total
Peak Hour Analysis From 04:45 PM to 05:30 PM - Peak 1 of 1																	
Peak Hour for Entire Intersection Begins at 04:45 PM																	
04:45 PM	12	127	2	141	**16**	6	25	47	**5**	205	13	223	8	**18**	1	27	438
05:00 PM	**21**	139	**12**	**172**	13	**7**	**28**	**48**	4	171	10	185	6	14	3	23	428
05:15 PM	8	**151**	5	164	14	5	15	34	5	205	13	223	13	5	1	19	440
05:30 PM	13	150	2	165	13	5	16	34	1	**245**	**14**	**260**	**24**	16	**5**	**45**	**504**
Total Volume	54	567	21	642	56	23	84	163	15	826	50	891	51	53	10	114	1810
% App. Total	8.4	88.3	3.3		34.4	14.1	51.5		1.7	92.7	5.6		44.7	46.5	8.8		
PHF	.643	.939	.438	.933	.875	.821	.750	.849	.750	.843	.893	.857	.531	.736	.500	.633	.898

Counts Unlimited, Inc.
PO Box 1178
Corona, CA 92878
(951)268-6268

City of Victorville
N/S: US-395
E/W: Joshua Street
Weather: Clear

File Name : 06_VIC_395_Joshua PM
Site Code : 05122132
Start Date : 2/16/2022
Page No : 2

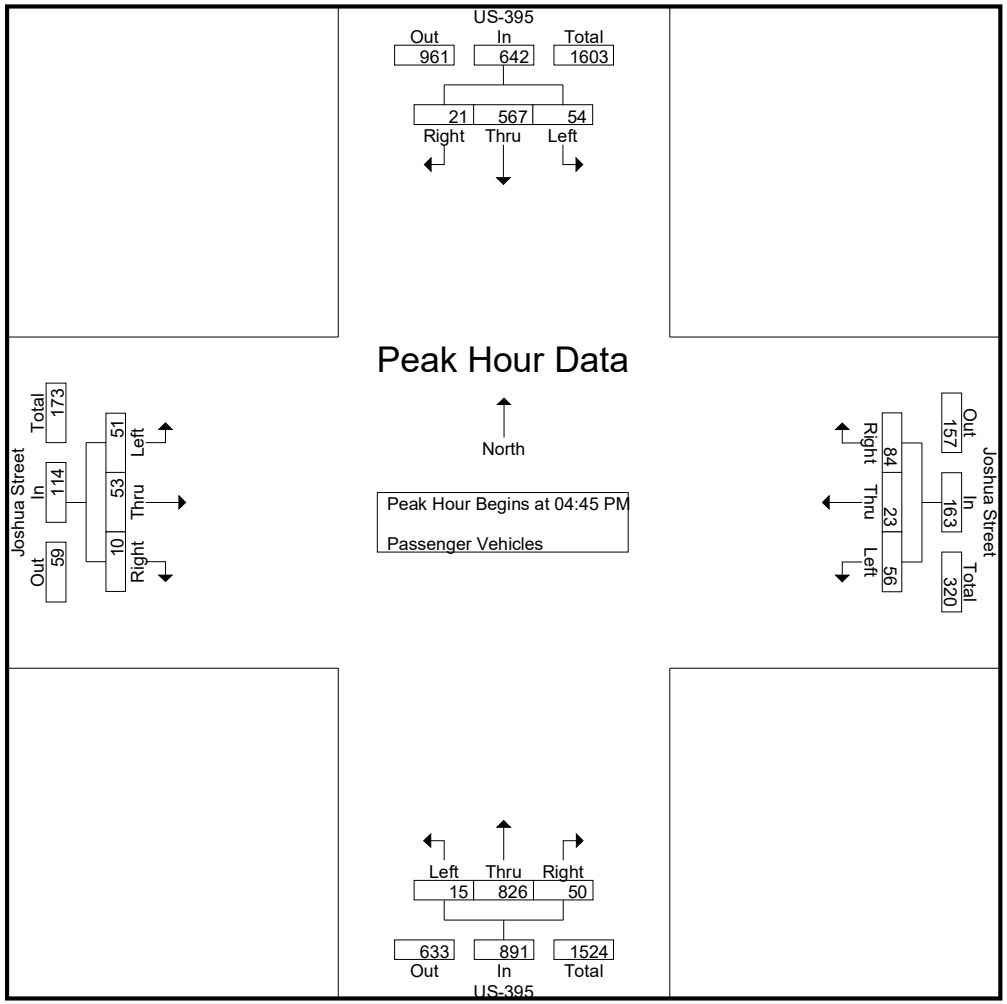

Counts Unlimited, Inc.
PO Box 1178
Corona, CA 92878
(951)268-6268

City of Victorville
N/S: US-395
E/W: Joshua Street
Weather: Clear

File Name : 06_VIC_395_Joshua PM
Site Code : 05122132
Start Date : 2/16/2022
Page No : 3

	US-395 Southbound				Joshua Street Westbound				US-395 Northbound				Joshua Street Eastbound				
Start Time	Left	Thru	Right	App. Total	Left	Thru	Right	App. Total	Left	Thru	Right	App. Total	Left	Thru	Right	App. Total	Int. Total
Peak Hour Analysis From 04:45 PM to 05:30 PM - Peak 1 of 1																	
Peak Hour for Each Approach Begins at:																	
	04:45 PM				04:45 PM				04:45 PM				04:45 PM				
+0 mins.	12	127	2	141	**16**	6	25	47	**5**	205	13	223	8	**18**	1	27	
+15 mins.	**21**	139	**12**	**172**	13	**7**	**28**	**48**	4	171	10	185	6	14	3	23	
+30 mins.	8	**151**	5	164	14	5	15	34	5	205	13	223	13	5	1	19	
+45 mins.	13	150	2	165	13	5	16	34	1	**245**	**14**	**260**	**24**	16	**5**	**45**	
Total Volume	54	567	21	642	56	23	84	163	15	826	50	891	51	53	10	114	
% App. Total	8.4	88.3	3.3		34.4	14.1	51.5		1.7	92.7	5.6		44.7	46.5	8.8		
PHF	.643	.939	.438	.933	.875	.821	.750	.849	.750	.843	.893	.857	.531	.736	.500	.633	

Counts Unlimited, Inc.
PO Box 1178
Corona, CA 92878
(951)268-6268

City of Victorville
N/S: US-395
E/W: Joshua Street
Weather: Clear

File Name : 06_VIC_395_Joshua PM
Site Code : 05122132
Start Date : 2/16/2022
Page No : 1

Groups Printed- Large 2 Axle Vehicles

	US-395 Southbound					Joshua Street Westbound					US-395 Northbound					Joshua Street Eastbound							
Start Time	Left	Thru	Right	RTOR	App. Total	Left	Thru	Right	RTOR	App. Total	Left	Thru	Right	RTOR	App. Total	Left	Thru	Right	RTOR	App. Total	Exclu. Total	Inclu. Total	Int. Total
04:00 PM	0	7	0	0	7	0	1	1	0	2	0	7	1	0	8	0	1	0	0	1	0	18	18
04:15 PM	0	5	1	0	6	0	0	1	0	1	1	5	0	0	6	0	0	0	0	0	0	13	13
04:30 PM	1	2	0	0	3	0	1	2	0	3	0	5	1	0	6	1	1	0	0	2	0	14	14
04:45 PM	1	3	1	0	5	0	0	0	0	0	0	4	0	0	4	0	0	0	0	0	0	9	9
Total	2	17	2	0	21	0	2	4	0	6	1	21	2	0	24	1	2	0	0	3	0	54	54
05:00 PM	0	3	0	0	3	0	0	0	0	0	1	8	0	0	9	1	0	0	0	1	0	13	13
05:15 PM	1	4	0	0	5	0	0	1	0	1	0	5	3	1	8	0	0	0	0	0	1	14	15
05:30 PM	0	4	0	0	4	1	0	1	1	2	0	9	1	1	10	1	0	0	0	1	2	17	19
05:45 PM	0	4	0	0	4	0	0	1	0	1	0	5	0	0	5	0	0	0	0	0	0	10	10
Total	1	15	0	0	16	1	0	3	1	4	1	27	4	2	32	2	0	0	0	2	3	54	57
Grand Total	3	32	2	0	37	1	2	7	1	10	2	48	6	2	56	3	2	0	0	5	3	108	111
Apprch %	8.1	86.5	5.4			10	20	70			3.6	85.7	10.7			60	40	0					
Total %	2.8	29.6	1.9		34.3	0.9	1.9	6.5		9.3	1.9	44.4	5.6		51.9	2.8	1.9	0		4.6	2.7	97.3	

	US-395 Southbound				Joshua Street Westbound				US-395 Northbound				Joshua Street Eastbound				
Start Time	Left	Thru	Right	App. Total	Left	Thru	Right	App. Total	Left	Thru	Right	App. Total	Left	Thru	Right	App. Total	Int. Total
Peak Hour Analysis From 04:45 PM to 05:30 PM - Peak 1 of 1																	
Peak Hour for Entire Intersection Begins at 04:45 PM																	
04:45 PM	**1**	3	**1**	**5**	0	0	0	0	0	4	0	4	0	0	0	0	9
05:00 PM	0	3	0	3	0	0	0	0	**1**	8	0	9	**1**	0	0	**1**	13
05:15 PM	1	**4**	0	5	0	0	**1**	1	0	5	**3**	8	0	0	0	0	14
05:30 PM	0	4	0	4	**1**	0	1	**2**	0	**9**	1	**10**	1	0	0	1	**17**
Total Volume	2	14	1	17	1	0	2	3	1	26	4	31	2	0	0	2	53
% App. Total	11.8	82.4	5.9		33.3	0	66.7		3.2	83.9	12.9		100	0	0		
PHF	.500	.875	.250	.850	.250	.000	.500	.375	.250	.722	.333	.775	.500	.000	.000	.500	.779

Counts Unlimited, Inc.
PO Box 1178
Corona, CA 92878
(951)268-6268

City of Victorville
N/S: US-395
E/W: Joshua Street
Weather: Clear

File Name : 06_VIC_395_Joshua PM
Site Code : 05122132
Start Date : 2/16/2022
Page No : 2

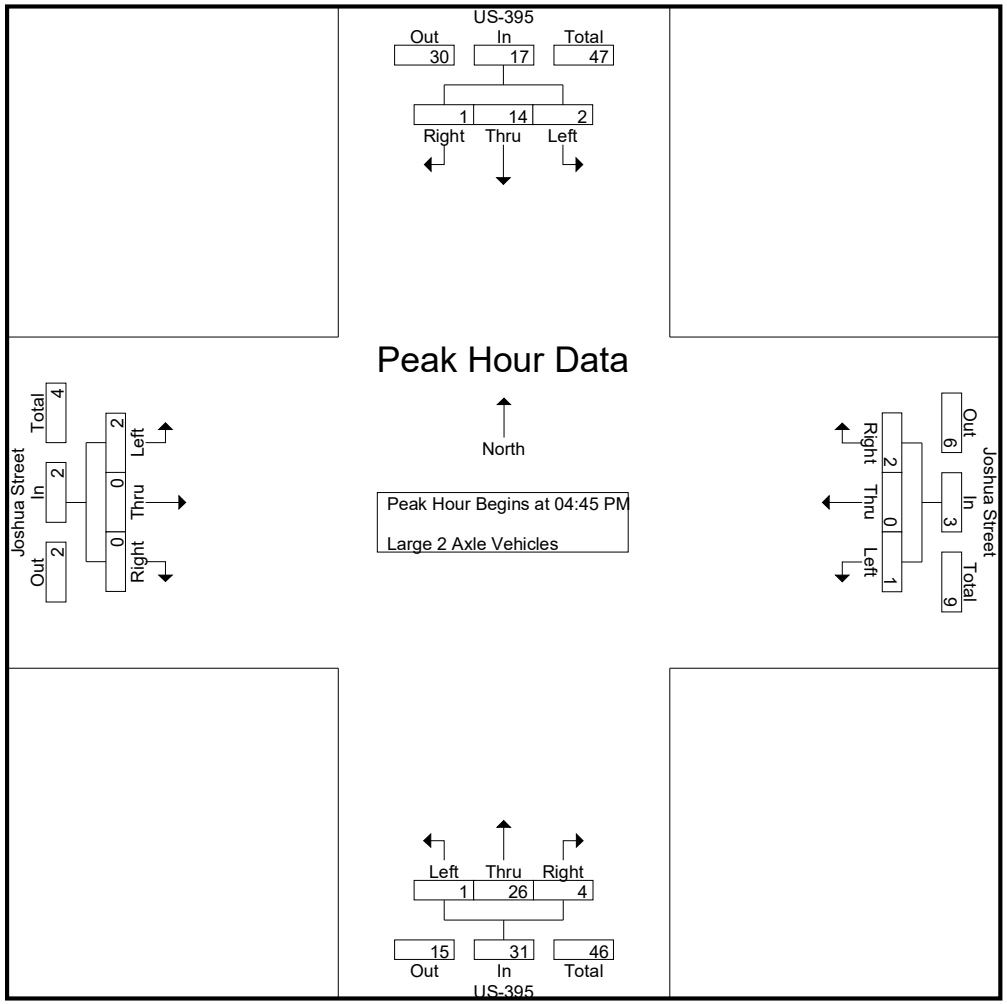

Counts Unlimited, Inc.
PO Box 1178
Corona, CA 92878
(951)268-6268

City of Victorville
N/S: US-395
E/W: Joshua Street
Weather: Clear

File Name : 06_VIC_395_Joshua PM
Site Code : 05122132
Start Date : 2/16/2022
Page No : 3

	US-395 Southbound				Joshua Street Westbound				US-395 Northbound				Joshua Street Eastbound				
Start Time	Left	Thru	Right	App. Total	Left	Thru	Right	App. Total	Left	Thru	Right	App. Total	Left	Thru	Right	App. Total	Int. Total
Peak Hour Analysis From 04:45 PM to 05:30 PM - Peak 1 of 1																	
Peak Hour for Each Approach Begins at:																	
	04:45 PM				04:45 PM				04:45 PM				04:45 PM				
+0 mins.	**1**	3	**1**	**5**	0	0	0	0	0	4	0	4	0	0	0	0	
+15 mins.	0	3	0	3	0	0	0	0	**1**	8	0	9	**1**	0	0	**1**	
+30 mins.	1	**4**	0	5	0	0	**1**	1	0	5	**3**	8	0	0	0	0	
+45 mins.	0	4	0	4	**1**	0	1	**2**	0	**9**	1	**10**	1	0	0	1	
Total Volume	2	14	1	17	1	0	2	3	1	26	4	31	2	0	0	2	
% App. Total	11.8	82.4	5.9		33.3	0	66.7		3.2	83.9	12.9		100	0	0		
PHF	.500	.875	.250	.850	.250	.000	.500	.375	.250	.722	.333	.775	.500	.000	.000	.500	

Counts Unlimited, Inc.
PO Box 1178
Corona, CA 92878
(951)268-6268

City of Victorville
N/S: US-395
E/W: Joshua Street
Weather: Clear

File Name : 06_VIC_395_Joshua PM
Site Code : 05122132
Start Date : 2/16/2022
Page No : 1

Groups Printed- 3 Axle Vehicles

	US-395 Southbound					Joshua Street Westbound					US-395 Northbound					Joshua Street Eastbound							
Start Time	Left	Thru	Right	RTOR	App. Total	Left	Thru	Right	RTOR	App. Total	Left	Thru	Right	RTOR	App. Total	Left	Thru	Right	RTOR	App. Total	Exclu. Total	Inclu. Total	Int. Total
04:00 PM	0	1	0	0	1	0	0	0	0	0	0	4	0	0	4	1	0	0	0	1	0	6	6
04:15 PM	0	0	0	0	0	0	0	0	0	0	0	3	0	0	3	0	1	0	0	1	0	4	4
04:30 PM	0	3	0	0	3	0	0	0	0	0	0	3	0	0	3	0	0	0	0	0	0	6	6
04:45 PM	0	4	0	0	4	0	0	1	0	1	0	0	0	0	0	0	0	0	0	0	0	5	5
Total	0	8	0	0	8	0	0	1	0	1	0	10	0	0	10	1	1	0	0	2	0	21	21
05:00 PM	1	1	0	0	2	0	0	0	0	0	0	0	0	0	0	0	0	0	0	0	0	2	2
05:15 PM	1	1	0	0	2	0	0	0	0	0	0	1	0	0	1	0	0	0	0	0	0	3	3
05:30 PM	0	1	0	0	1	1	0	1	1	2	0	2	0	0	2	0	0	0	0	0	1	5	6
05:45 PM	0	2	0	0	2	0	0	1	1	1	0	1	0	0	1	0	0	0	0	0	1	4	5
Total	2	5	0	0	7	1	0	2	2	3	0	4	0	0	4	0	0	0	0	0	2	14	16
Grand Total	2	13	0	0	15	1	0	3	2	4	0	14	0	0	14	1	1	0	0	2	2	35	37
Apprch %	13.3	86.7	0			25	0	75			0	100	0			50	50	0					
Total %	5.7	37.1	0		42.9	2.9	0	8.6		11.4	0	40	0		40	2.9	2.9	0		5.7	5.4	94.6	

	US-395 Southbound				Joshua Street Westbound				US-395 Northbound				Joshua Street Eastbound				
Start Time	Left	Thru	Right	App. Total	Left	Thru	Right	App. Total	Left	Thru	Right	App. Total	Left	Thru	Right	App. Total	Int. Total
Peak Hour Analysis From 04:45 PM to 05:30 PM - Peak 1 of 1																	
Peak Hour for Entire Intersection Begins at 04:45 PM																	
04:45 PM	0	**4**	0	**4**	0	0	**1**	1	0	0	0	0	0	0	0	0	**5**
05:00 PM	**1**	1	0	2	0	0	0	0	0	0	0	0	0	0	0	0	2
05:15 PM	1	1	0	2	0	0	0	0	0	1	0	1	0	0	0	0	3
05:30 PM	0	1	0	1	**1**	0	1	**2**	0	**2**	0	**2**	0	0	0	0	5
Total Volume	2	7	0	9	1	0	2	3	0	3	0	3	0	0	0	0	15
% App. Total	22.2	77.8	0		33.3	0	66.7		0	100	0		0	0	0		
PHF	.500	.438	.000	.563	.250	.000	.500	.375	.000	.375	.000	.375	.000	.000	.000	.000	.750

Counts Unlimited, Inc.
PO Box 1178
Corona, CA 92878
(951)268-6268

City of Victorville
N/S: US-395
E/W: Joshua Street
Weather: Clear

File Name : 06_VIC_395_Joshua PM
Site Code : 05122132
Start Date : 2/16/2022
Page No : 2

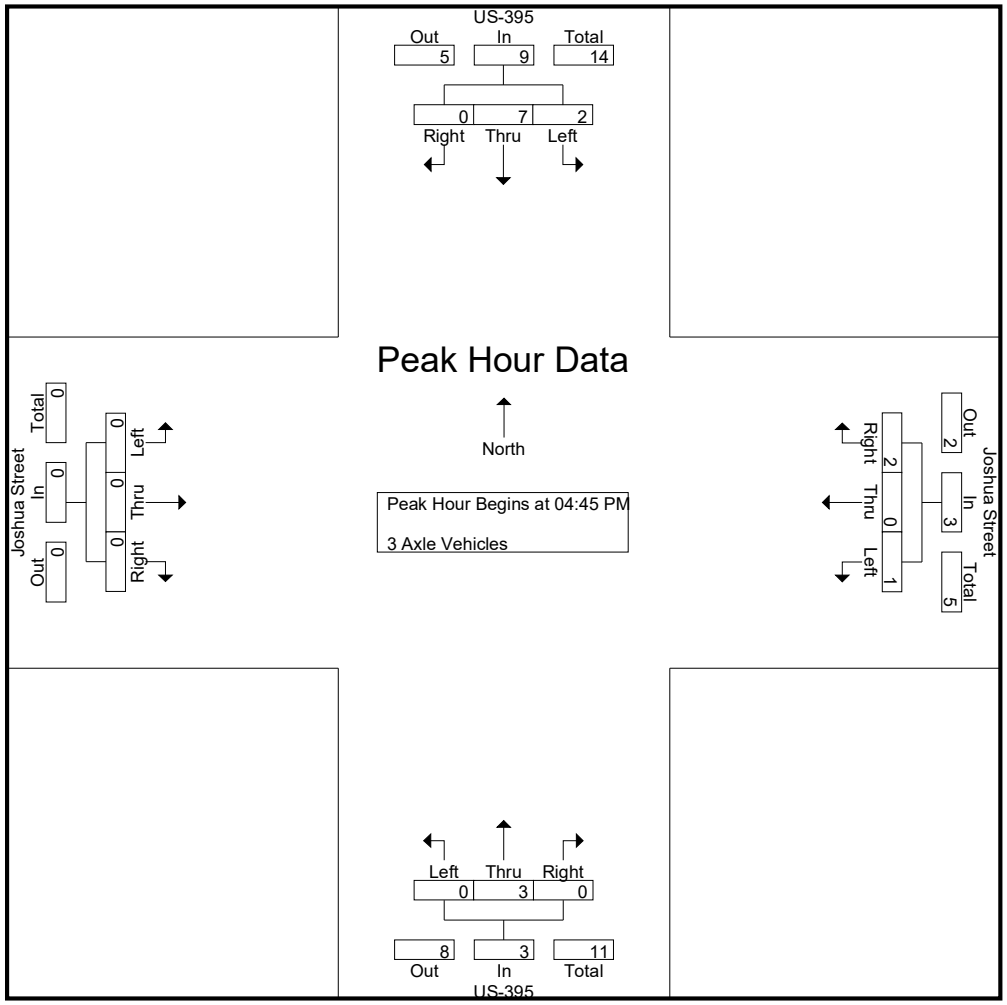

Counts Unlimited, Inc.
PO Box 1178
Corona, CA 92878
(951)268-6268

City of Victorville
N/S: US-395
E/W: Joshua Street
Weather: Clear

File Name : 06_VIC_395_Joshua PM
Site Code : 05122132
Start Date : 2/16/2022
Page No : 3

	US-395 Southbound				Joshua Street Westbound				US-395 Northbound				Joshua Street Eastbound				
Start Time	Left	Thru	Right	App. Total	Left	Thru	Right	App. Total	Left	Thru	Right	App. Total	Left	Thru	Right	App. Total	Int. Total
Peak Hour Analysis From 04:45 PM to 05:30 PM - Peak 1 of 1																	
Peak Hour for Each Approach Begins at:																	
	04:45 PM				04:45 PM				04:45 PM				04:45 PM				
+0 mins.	0	**4**	0	**4**	0	0	**1**	1	0	0	0	0	0	0	0	0	
+15 mins.	**1**	1	0	2	0	0	0	0	0	0	0	0	0	0	0	0	
+30 mins.	1	1	0	2	0	0	0	0	0	1	0	1	0	0	0	0	
+45 mins.	0	1	0	1	**1**	0	1	**2**	0	**2**	0	**2**	0	0	0	0	
Total Volume	2	7	0	9	1	0	2	3	0	3	0	3	0	0	0	0	
% App. Total	22.2	77.8	0		33.3	0	66.7		0	100	0		0	0	0		
PHF	.500	.438	.000	.563	.250	.000	.500	.375	.000	.375	.000	.375	.000	.000	.000	.000	

Counts Unlimited, Inc.
PO Box 1178
Corona, CA 92878
(951)268-6268

City of Victorville
N/S: US-395
E/W: Joshua Street
Weather: Clear

File Name : 06_VIC_395_Joshua PM
Site Code : 05122132
Start Date : 2/16/2022
Page No : 1

Groups Printed- 4+ Axle Trucks

	US-395 Southbound					Joshua Street Westbound					US-395 Northbound					Joshua Street Eastbound							
Start Time	Left	Thru	Right	RTOR	App. Total	Left	Thru	Right	RTOR	App. Total	Left	Thru	Right	RTOR	App. Total	Left	Thru	Right	RTOR	App. Total	Exclu. Total	Inclu. Total	Int. Total
04:00 PM	3	17	0	0	20	3	0	5	0	8	0	21	2	1	23	1	0	0	0	1	1	52	53
04:15 PM	6	28	0	0	34	0	0	4	2	4	0	13	3	2	16	0	0	0	0	0	4	54	58
04:30 PM	7	17	0	0	24	1	0	2	2	3	0	18	5	1	23	0	0	0	0	0	3	50	53
04:45 PM	4	12	0	0	16	1	0	4	0	5	0	14	4	0	18	0	0	0	0	0	0	39	39
Total	20	74	0	0	94	5	0	15	4	20	0	66	14	4	80	1	0	0	0	1	8	195	203
05:00 PM	5	14	0	0	19	0	1	2	1	3	0	15	3	2	18	1	0	0	0	1	3	41	44
05:15 PM	3	24	0	0	27	1	0	1	1	2	0	22	3	0	25	0	0	0	0	0	1	54	55
05:30 PM	4	23	0	0	27	2	0	3	0	5	0	19	1	1	20	0	0	0	0	0	1	52	53
05:45 PM	5	20	0	0	25	0	0	4	2	4	0	16	3	1	19	0	0	0	0	0	3	48	51
Total	17	81	0	0	98	3	1	10	4	14	0	72	10	4	82	1	0	0	0	1	8	195	203
Grand Total	37	155	0	0	192	8	1	25	8	34	0	138	24	8	162	2	0	0	0	2	16	390	406
Apprch %	19.3	80.7	0			23.5	2.9	73.5			0	85.2	14.8			100	0	0					
Total %	9.5	39.7	0		49.2	2.1	0.3	6.4		8.7	0	35.4	6.2		41.5	0.5	0	0		0.5	3.9	96.1	

	US-395 Southbound				Joshua Street Westbound				US-395 Northbound				Joshua Street Eastbound				
Start Time	Left	Thru	Right	App. Total	Left	Thru	Right	App. Total	Left	Thru	Right	App. Total	Left	Thru	Right	App. Total	Int. Total
Peak Hour Analysis From 04:45 PM to 05:30 PM - Peak 1 of 1																	
Peak Hour for Entire Intersection Begins at 04:45 PM																	
04:45 PM	4	12	0	16	1	0	**4**	**5**	0	14	**4**	18	0	0	0	0	39
05:00 PM	**5**	14	0	19	0	**1**	2	3	0	15	3	18	**1**	0	0	**1**	41
05:15 PM	3	**24**	0	**27**	1	0	1	2	0	**22**	3	**25**	0	0	0	0	**54**
05:30 PM	4	23	0	27	**2**	0	3	5	0	19	1	20	0	0	0	0	52
Total Volume	16	73	0	89	4	1	10	15	0	70	11	81	1	0	0	1	186
% App. Total	18	82	0		26.7	6.7	66.7		0	86.4	13.6		100	0	0		
PHF	.800	.760	.000	.824	.500	.250	.625	.750	.000	.795	.688	.810	.250	.000	.000	.250	.861

Counts Unlimited, Inc.
PO Box 1178
Corona, CA 92878
(951)268-6268

City of Victorville
N/S: US-395
E/W: Joshua Street
Weather: Clear

File Name : 06_VIC_395_Joshua PM
Site Code : 05122132
Start Date : 2/16/2022
Page No : 2

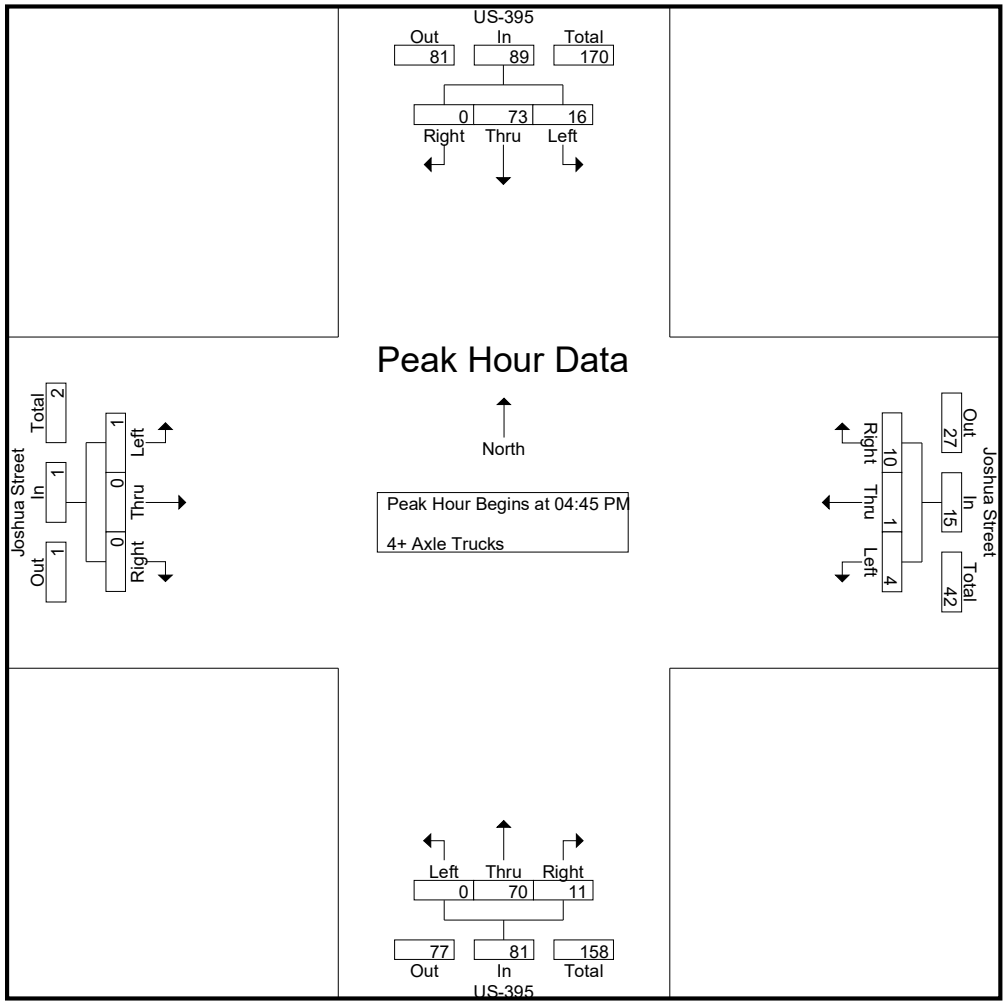

Counts Unlimited, Inc.
PO Box 1178
Corona, CA 92878
(951)268-6268

City of Victorville
N/S: US-395
E/W: Joshua Street
Weather: Clear

File Name : 06_VIC_395_Joshua PM
Site Code : 05122132
Start Date : 2/16/2022
Page No : 3

	US-395 Southbound				Joshua Street Westbound				US-395 Northbound				Joshua Street Eastbound				
Start Time	Left	Thru	Right	App. Total	Left	Thru	Right	App. Total	Left	Thru	Right	App. Total	Left	Thru	Right	App. Total	Int. Total
Peak Hour Analysis From 04:45 PM to 05:30 PM - Peak 1 of 1																	
Peak Hour for Each Approach Begins at:																	
	04:45 PM				04:45 PM				04:45 PM				04:45 PM				
+0 mins.	4	12	0	16	1	0	**4**	**5**	0	14	**4**	18	0	0	0	0	
+15 mins.	**5**	14	0	19	0	**1**	2	3	0	15	3	18	**1**	0	0	**1**	
+30 mins.	3	**24**	0	**27**	1	0	1	2	0	**22**	3	**25**	0	0	0	0	
+45 mins.	4	23	0	27	**2**	0	3	5	0	19	1	20	0	0	0	0	
Total Volume	16	73	0	89	4	1	10	15	0	70	11	81	1	0	0	1	
% App. Total	18	82	0		26.7	6.7	66.7		0	86.4	13.6		100	0	0		
PHF	.800	.760	.000	.824	.500	.250	.625	.750	.000	.795	.688	.810	.250	.000	.000	.250	

Location: Victorville
N/S: US-395
E/W: Joshua Street

Date: 4/12/2018
Day: Wednesday

PEDESTRIANS

	North Leg US-395	East Leg Joshua Street	South Leg US-395	West Leg Joshua Street	
	Pedestrians	Pedestrians	Pedestrians	Pedestrians	
7:00 AM	0	0	0	0	0
7:15 AM	0	0	0	0	0
7:30 AM	0	0	0	0	0
7:45 AM	0	0	0	0	0
8:00 AM	0	0	0	0	0
8:15 AM	0	0	0	0	0
8:30 AM	0	0	0	0	0
8:45 AM	0	0	0	0	0
TOTAL VOLUMES:	0	0	0	0	0

	North Leg US-395	East Leg Joshua Street	South Leg US-395	West Leg Joshua Street	
	Pedestrians	Pedestrians	Pedestrians	Pedestrians	
4:00 PM	0	0	0	0	0
4:15 PM	0	0	0	0	0
4:30 PM	0	0	0	0	0
4:45 PM	0	0	0	0	0
5:00 PM	0	0	0	0	0
5:15 PM	0	0	0	0	0
5:30 PM	0	0	0	0	0
5:45 PM	0	0	0	0	0
TOTAL VOLUMES:	0	0	0	0	0

Counts Unlimited, Inc.
PO Box 1178
Corona, CA 92878
951-268-6268

Location: Victorville
N/S: US-395
E/W: Joshua Street

Date: 4/12/2018
Day: Wednesday

BICYCLES

	Southbound US-395			Westbound Joshua Street			Northbound US-395			Eastbound Joshua Street			
	Left	Thru	Right	Left	Thru	Right	Left	Thru	Right	Left	Thru	Right	
7:00 AM	0	0	0	0	0	0	0	0	0	0	0	0	0
7:15 AM	0	0	0	0	0	0	0	0	0	0	0	0	0
7:30 AM	0	0	0	0	0	0	0	0	0	0	0	0	0
7:45 AM	0	0	0	0	0	0	0	0	0	0	0	0	0
8:00 AM	0	0	0	0	0	0	0	0	0	0	0	0	0
8:15 AM	0	0	0	0	0	0	0	0	0	0	0	0	0
8:30 AM	0	0	0	0	0	0	0	0	0	0	0	0	0
8:45 AM	0	0	0	0	0	0	0	0	0	0	0	0	0
TOTAL VOLUMES:	0	0	0	0	0	0	0	0	0	0	0	0	0

	Southbound US-395			Westbound Joshua Street			Northbound US-395			Eastbound Joshua Street			
	Left	Thru	Right	Left	Thru	Right	Left	Thru	Right	Left	Thru	Right	
4:00 PM	0	0	0	0	0	0	0	0	0	0	0	0	0
4:15 PM	0	0	0	0	0	0	0	0	0	0	0	0	0
4:30 PM	0	0	0	0	0	0	0	0	0	0	0	0	0
4:45 PM	0	0	0	0	0	0	0	0	0	0	0	0	0
5:00 PM	0	0	0	0	0	0	0	0	0	0	0	0	0
5:15 PM	0	0	0	0	0	0	0	0	0	0	0	0	0
5:30 PM	0	0	0	0	0	0	0	0	0	0	0	0	0
5:45 PM	0	0	0	0	0	0	0	0	0	0	0	0	0
TOTAL VOLUMES:	0	0	0	0	0	0	0	0	0	0	0	0	0

Counts Unlimited, Inc.
PO Box 1178
Corona, CA 92878
(951)268-6268

City of Victorville
N/S: I-15 Southbound Off Ramp
E/W: Joshua Street
Weather: Clear

File Name : 07_VIC_15S_Joshua AM
Site Code : 05122132
Start Date : 2/16/2022
Page No : 1

Groups Printed- Passenger Vehicles - Large 2 Axle Vehicles - 3 Axle Vehicles - 4+ Axle Trucks

	I-15 Southbound Off Ramp Southbound			Joshua Street Westbound			Joshua Street Eastbound			
Start Time	Left	Right	App. Total	Thru	Right	App. Total	Left	Thru	App. Total	Int. Total
07:00 AM	2	14	16	8	0	8	0	26	26	50
07:15 AM	3	24	27	4	0	4	0	19	19	50
07:30 AM	0	13	13	9	0	9	0	23	23	45
07:45 AM	2	21	23	10	0	10	0	21	21	54
Total	7	72	79	31	0	31	0	89	89	199
08:00 AM	6	18	24	12	0	12	0	17	17	53
08:15 AM	6	25	31	9	0	9	0	21	21	61
08:30 AM	3	25	28	6	0	6	0	23	23	57
08:45 AM	0	26	26	10	0	10	0	14	14	50
Total	15	94	109	37	0	37	0	75	75	221
Grand Total	22	166	188	68	0	68	0	164	164	420
Apprch %	11.7	88.3		100	0		0	100		
Total %	5.2	39.5	44.8	16.2	0	16.2	0	39	39	
Passenger Vehicles	21	103	124	64	0	64	0	104	104	292
% Passenger Vehicles	95.5	62	66	94.1	0	94.1	0	63.4	63.4	69.5
Large 2 Axle Vehicles	0	12	12	3	0	3	0	9	9	24
% Large 2 Axle Vehicles	0	7.2	6.4	4.4	0	4.4	0	5.5	5.5	5.7
3 Axle Vehicles	1	3	4	1	0	1	0	1	1	6
% 3 Axle Vehicles	4.5	1.8	2.1	1.5	0	1.5	0	0.6	0.6	1.4
4+ Axle Trucks	0	48	48	0	0	0	0	50	50	98
% 4+ Axle Trucks	0	28.9	25.5	0	0	0	0	30.5	30.5	23.3

	I-15 Southbound Off Ramp Southbound			Joshua Street Westbound			Joshua Street Eastbound			
Start Time	Left	Right	App. Total	Thru	Right	App. Total	Left	Thru	App. Total	Int. Total
Peak Hour Analysis From 07:00 AM to 08:45 AM - Peak 1 of 1										
Peak Hour for Entire Intersection Begins at 07:45 AM										
07:45 AM	2	21	23	10	0	10	0	21	21	54
08:00 AM	**6**	18	24	**12**	0	**12**	0	17	17	53
08:15 AM	6	**25**	**31**	9	0	9	0	21	21	**61**
08:30 AM	3	25	28	6	0	6	0	**23**	**23**	57
Total Volume	17	89	106	37	0	37	0	82	82	225
% App. Total	16	84		100	0		0	100		
PHF	.708	.890	.855	.771	.000	.771	.000	.891	.891	.922

Counts Unlimited, Inc.
PO Box 1178
Corona, CA 92878
(951)268-6268

City of Victorville
N/S: I-15 Southbound Off Ramp
E/W: Joshua Street
Weather: Clear

File Name : 07_VIC_15S_Joshua AM
Site Code : 05122132
Start Date : 2/16/2022
Page No : 2

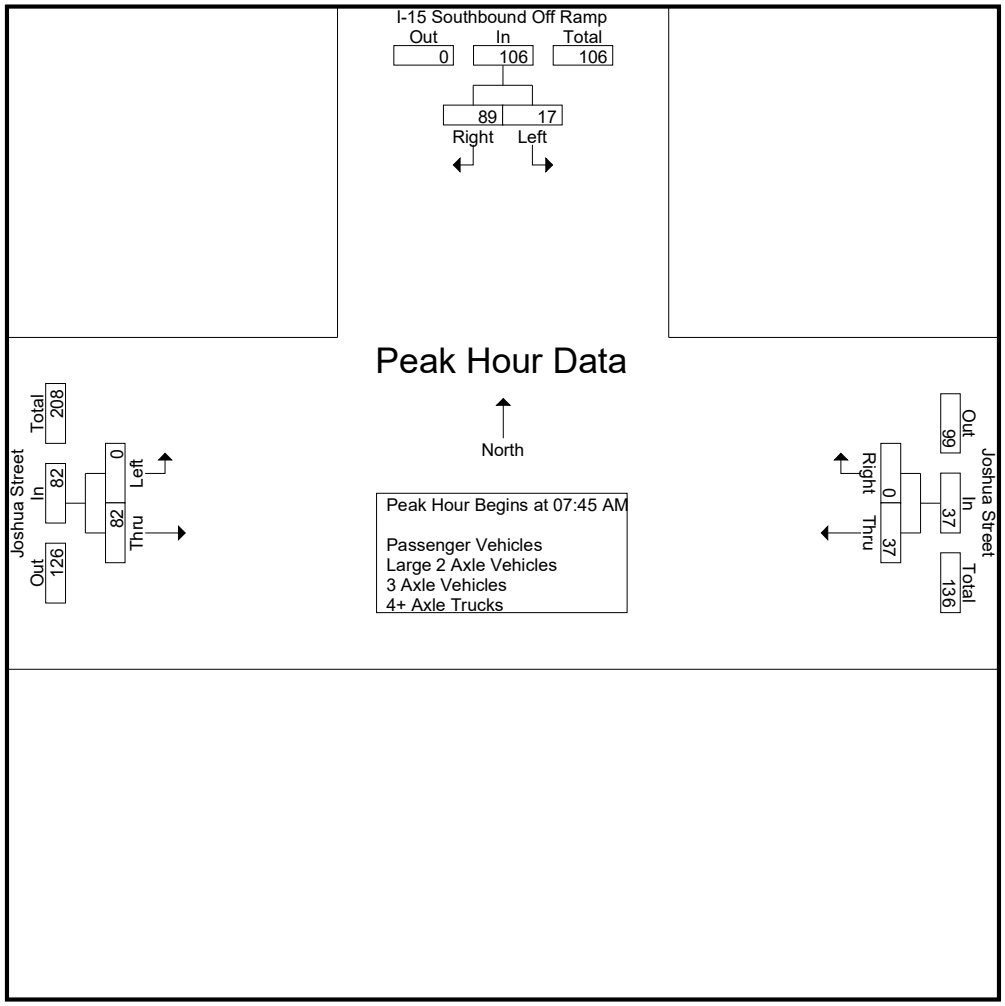

Peak Hour Analysis From 07:00 AM to 08:45 AM - Peak 1 of 1
Peak Hour for Each Approach Begins at:

	08:00 AM			07:30 AM			07:00 AM		
+0 mins.	**6**	18	24	9	0	9	0	**26**	**26**
+15 mins.	6	25	**31**	10	0	10	0	19	19
+30 mins.	3	25	28	**12**	0	**12**	0	23	23
+45 mins.	0	**26**	26	9	0	9	0	21	21
Total Volume	15	94	109	40	0	40	0	89	89
% App. Total	13.8	86.2		100	0		0	100	
PHF	.625	.904	.879	.833	.000	.833	.000	.856	.856

Counts Unlimited, Inc.
PO Box 1178
Corona, CA 92878
(951)268-6268

City of Victorville
N/S: I-15 Southbound Off Ramp
E/W: Joshua Street
Weather: Clear

File Name : 07_VIC_15S_Joshua AM
Site Code : 05122132
Start Date : 2/16/2022
Page No : 1

Groups Printed- Passenger Vehicles

	I-15 Southbound Off Ramp Southbound			Joshua Street Westbound			Joshua Street Eastbound			
Start Time	Left	Right	App. Total	Thru	Right	App. Total	Left	Thru	App. Total	Int. Total
07:00 AM	2	8	10	8	0	8	0	15	15	33
07:15 AM	2	14	16	3	0	3	0	11	11	30
07:30 AM	0	7	7	9	0	9	0	13	13	29
07:45 AM	2	15	17	10	0	10	0	15	15	42
Total	6	44	50	30	0	30	0	54	54	134
08:00 AM	6	11	17	11	0	11	0	10	10	38
08:15 AM	6	13	19	8	0	8	0	15	15	42
08:30 AM	3	17	20	5	0	5	0	18	18	43
08:45 AM	0	18	18	10	0	10	0	7	7	35
Total	15	59	74	34	0	34	0	50	50	158
Grand Total	21	103	124	64	0	64	0	104	104	292
Apprch %	16.9	83.1		100	0		0	100		
Total %	7.2	35.3	42.5	21.9	0	21.9	0	35.6	35.6	

	I-15 Southbound Off Ramp Southbound			Joshua Street Westbound			Joshua Street Eastbound			
Start Time	Left	Right	App. Total	Thru	Right	App. Total	Left	Thru	App. Total	Int. Total
Peak Hour Analysis From 07:45 AM to 08:30 AM - Peak 1 of 1										
Peak Hour for Entire Intersection Begins at 07:45 AM										
07:45 AM	2	15	17	10	0	10	0	15	15	42
08:00 AM	**6**	11	17	**11**	0	**11**	0	10	10	38
08:15 AM	6	13	19	8	0	8	0	15	15	42
08:30 AM	3	**17**	**20**	5	0	5	0	**18**	**18**	**43**
Total Volume	17	56	73	34	0	34	0	58	58	165
% App. Total	23.3	76.7		100	0		0	100		
PHF	.708	.824	.913	.773	.000	.773	.000	.806	.806	.959

Counts Unlimited, Inc.
PO Box 1178
Corona, CA 92878
(951)268-6268

City of Victorville
N/S: I-15 Southbound Off Ramp
E/W: Joshua Street
Weather: Clear

File Name : 07_VIC_15S_Joshua AM
Site Code : 05122132
Start Date : 2/16/2022
Page No : 2

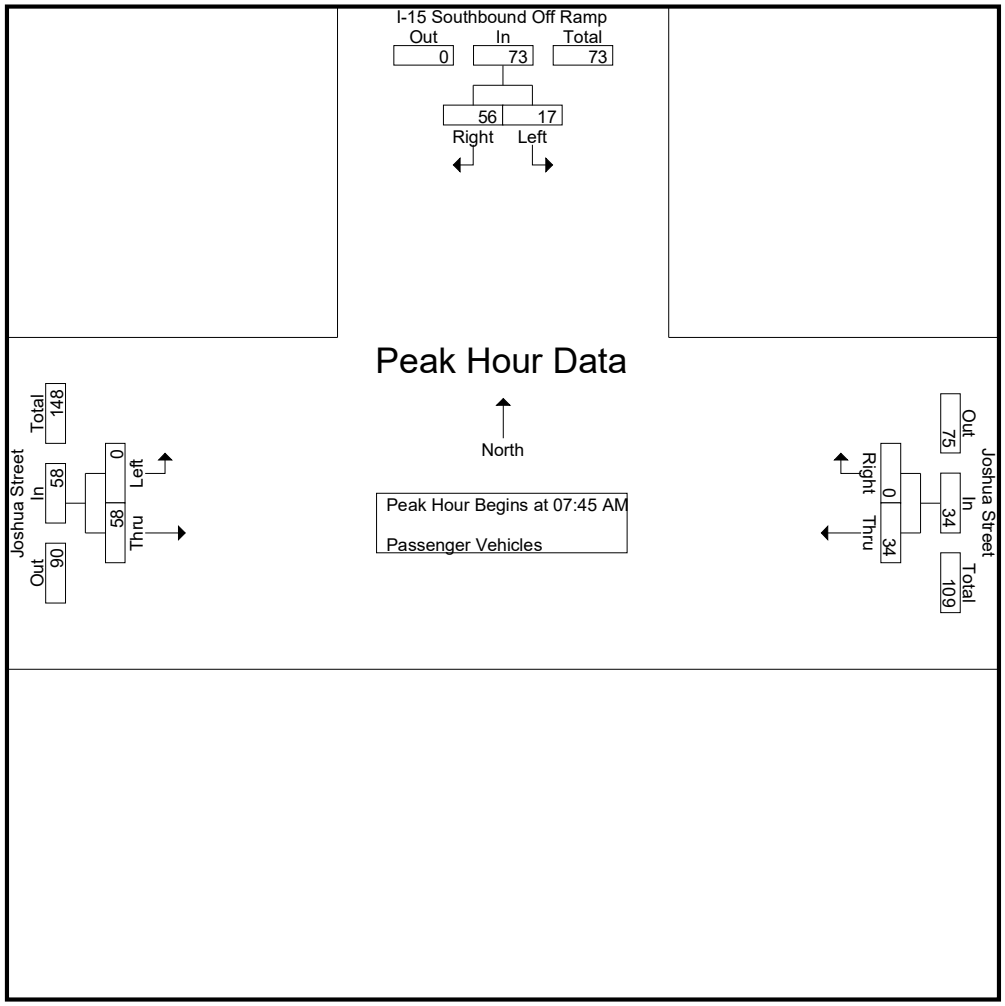

Peak Hour Analysis From 07:45 AM to 08:30 AM - Peak 1 of 1
Peak Hour for Each Approach Begins at:

	07:45 AM			07:45 AM			07:45 AM		
+0 mins.	2	15	17	10	0	10	0	15	15
+15 mins.	**6**	11	17	**11**	0	**11**	0	10	10
+30 mins.	6	13	19	8	0	8	0	15	15
+45 mins.	3	**17**	**20**	5	0	5	0	**18**	**18**
Total Volume	17	56	73	34	0	34	0	58	58
% App. Total	23.3	76.7		100	0		0	100	
PHF	.708	.824	.913	.773	.000	.773	.000	.806	.806

Counts Unlimited, Inc.
PO Box 1178
Corona, CA 92878
(951)268-6268

City of Victorville
N/S: I-15 Southbound Off Ramp
E/W: Joshua Street
Weather: Clear

File Name : 07_VIC_15S_Joshua AM
Site Code : 05122132
Start Date : 2/16/2022
Page No : 1

Groups Printed- Large 2 Axle Vehicles

	I-15 Southbound Off Ramp Southbound			Joshua Street Westbound			Joshua Street Eastbound			
Start Time	Left	Right	App. Total	Thru	Right	App. Total	Left	Thru	App. Total	Int. Total
07:00 AM	0	0	0	0	0	0	0	2	2	2
07:15 AM	0	3	3	1	0	1	0	0	0	4
07:30 AM	0	3	3	0	0	0	0	1	1	4
07:45 AM	0	2	2	0	0	0	0	2	2	4
Total	0	8	8	1	0	1	0	5	5	14
08:00 AM	0	2	2	1	0	1	0	3	3	6
08:15 AM	0	0	0	1	0	1	0	0	0	1
08:30 AM	0	1	1	0	0	0	0	1	1	2
08:45 AM	0	1	1	0	0	0	0	0	0	1
Total	0	4	4	2	0	2	0	4	4	10
Grand Total	0	12	12	3	0	3	0	9	9	24
Apprch %	0	100		100	0		0	100		
Total %	0	50	50	12.5	0	12.5	0	37.5	37.5	

	I-15 Southbound Off Ramp Southbound			Joshua Street Westbound			Joshua Street Eastbound			
Start Time	Left	Right	App. Total	Thru	Right	App. Total	Left	Thru	App. Total	Int. Total
Peak Hour Analysis From 07:45 AM to 08:30 AM - Peak 1 of 1										
Peak Hour for Entire Intersection Begins at 07:45 AM										
07:45 AM	0	**2**	**2**	0	0	0	0	2	2	4
08:00 AM	0	2	2	**1**	0	**1**	0	**3**	**3**	**6**
08:15 AM	0	0	0	1	0	1	0	0	0	1
08:30 AM	0	1	1	0	0	0	0	1	1	2
Total Volume	0	5	5	2	0	2	0	6	6	13
% App. Total	0	100		100	0		0	100		
PHF	.000	.625	.625	.500	.000	.500	.000	.500	.500	.542

Counts Unlimited, Inc.
PO Box 1178
Corona, CA 92878
(951)268-6268

City of Victorville
N/S: I-15 Southbound Off Ramp
E/W: Joshua Street
Weather: Clear

File Name : 07_VIC_15S_Joshua AM
Site Code : 05122132
Start Date : 2/16/2022
Page No : 2

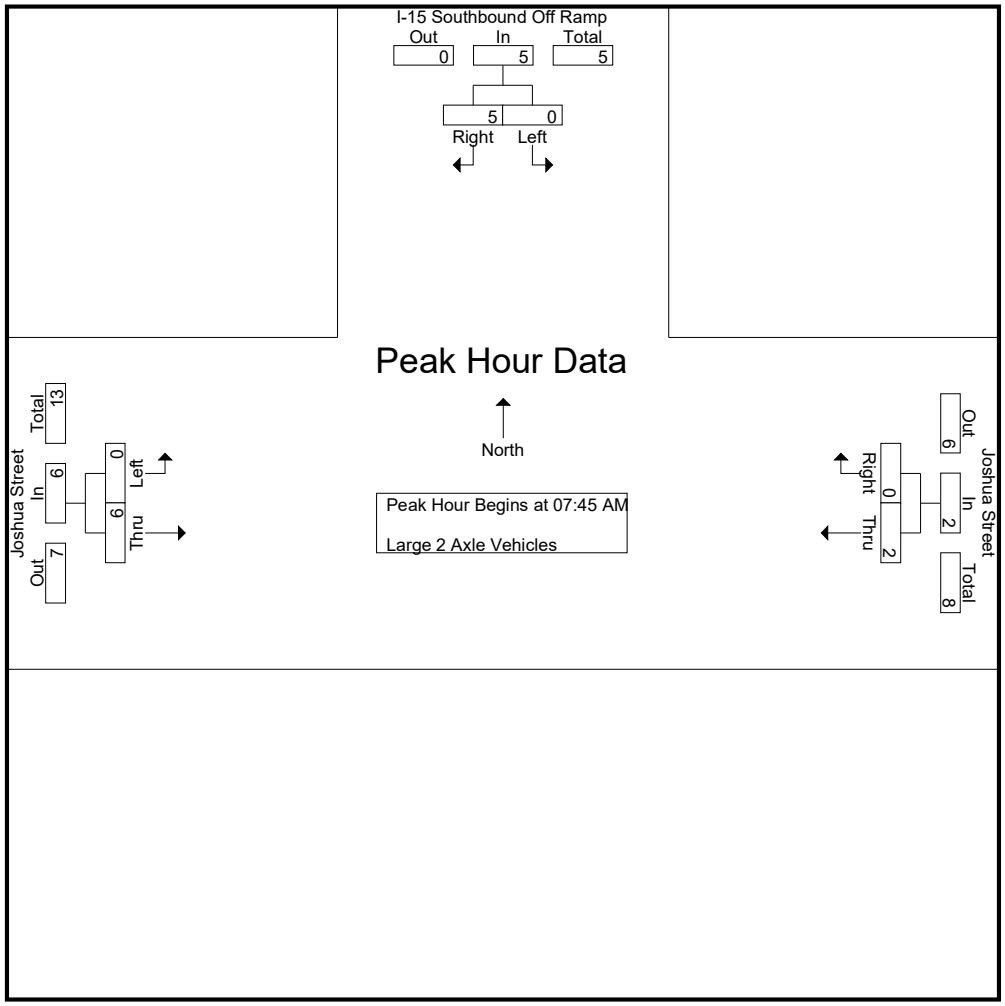

Peak Hour Analysis From 07:45 AM to 08:30 AM - Peak 1 of 1
Peak Hour for Each Approach Begins at:

	07:45 AM			07:45 AM			07:45 AM		
+0 mins.	0	**2**	**2**	0	0	0	0	2	2
+15 mins.	0	2	2	**1**	0	**1**	0	**3**	**3**
+30 mins.	0	0	0	1	0	1	0	0	0
+45 mins.	0	1	1	0	0	0	0	1	1
Total Volume	0	5	5	2	0	2	0	6	6
% App. Total	0	100		100	0		0	100	
PHF	.000	.625	.625	.500	.000	.500	.000	.500	.500

Counts Unlimited, Inc.
PO Box 1178
Corona, CA 92878
(951)268-6268

City of Victorville
N/S: I-15 Southbound Off Ramp
E/W: Joshua Street
Weather: Clear

File Name : 07_VIC_15S_Joshua AM
Site Code : 05122132
Start Date : 2/16/2022
Page No : 1

Groups Printed- 3 Axle Vehicles

	I-15 Southbound Off Ramp Southbound			Joshua Street Westbound			Joshua Street Eastbound			
Start Time	Left	Right	App. Total	Thru	Right	App. Total	Left	Thru	App. Total	Int. Total
07:00 AM	0	0	0	0	0	0	0	1	1	1
07:15 AM	1	1	2	0	0	0	0	0	0	2
07:30 AM	0	0	0	0	0	0	0	0	0	0
07:45 AM	0	0	0	0	0	0	0	0	0	0
Total	1	1	2	0	0	0	0	1	1	3
08:00 AM	0	0	0	0	0	0	0	0	0	0
08:15 AM	0	1	1	0	0	0	0	0	0	1
08:30 AM	0	0	0	1	0	1	0	0	0	1
08:45 AM	0	1	1	0	0	0	0	0	0	1
Total	0	2	2	1	0	1	0	0	0	3
Grand Total	1	3	4	1	0	1	0	1	1	6
Apprch %	25	75		100	0		0	100		
Total %	16.7	50	66.7	16.7	0	16.7	0	16.7	16.7	

	I-15 Southbound Off Ramp Southbound			Joshua Street Westbound			Joshua Street Eastbound			
Start Time	Left	Right	App. Total	Thru	Right	App. Total	Left	Thru	App. Total	Int. Total
Peak Hour Analysis From 07:45 AM to 08:30 AM - Peak 1 of 1										
Peak Hour for Entire Intersection Begins at 07:45 AM										
07:45 AM	0	0	0	0	0	0	0	0	0	0
08:00 AM	0	0	0	0	0	0	0	0	0	0
08:15 AM	0	**1**	**1**	0	0	0	0	0	0	**1**
08:30 AM	0	0	0	**1**	0	**1**	0	0	0	1
Total Volume	0	1	1	1	0	1	0	0	0	2
% App. Total	0	100		100	0		0	0		
PHF	.000	.250	.250	.250	.000	.250	.000	.000	.000	.500

Counts Unlimited, Inc.
PO Box 1178
Corona, CA 92878
(951)268-6268

City of Victorville
N/S: I-15 Southbound Off Ramp
E/W: Joshua Street
Weather: Clear

File Name : 07_VIC_15S_Joshua AM
Site Code : 05122132
Start Date : 2/16/2022
Page No : 2

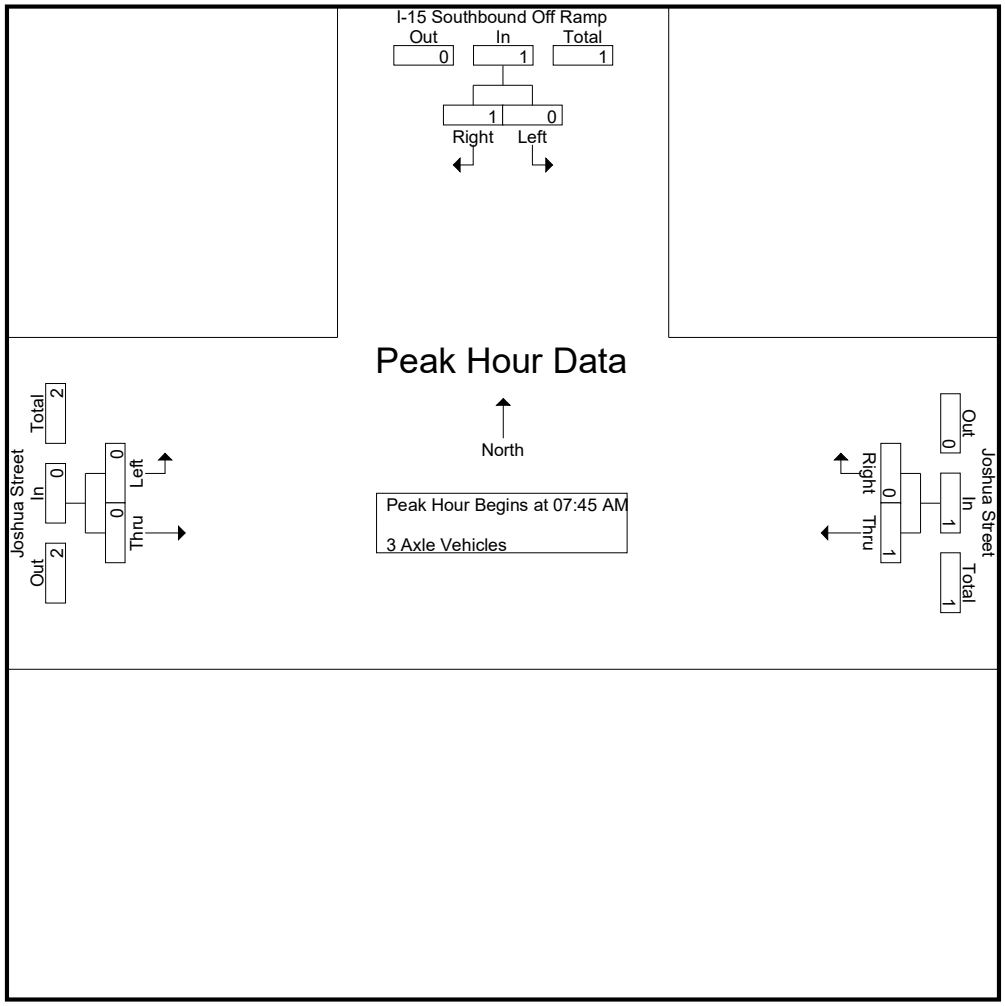

Peak Hour Analysis From 07:45 AM to 08:30 AM - Peak 1 of 1
Peak Hour for Each Approach Begins at:

	07:45 AM			07:45 AM			07:45 AM		
+0 mins.	0	0	0	0	0	0	0	0	0
+15 mins.	0	0	0	0	0	0	0	0	0
+30 mins.	0	**1**	**1**	0	0	0	0	0	0
+45 mins.	0	0	0	**1**	0	**1**	0	0	0
Total Volume	0	1	1	1	0	1	0	0	0
% App. Total	0	100		100	0		0	0	
PHF	.000	.250	.250	.250	.000	.250	.000	.000	.000

Counts Unlimited, Inc.
PO Box 1178
Corona, CA 92878
(951)268-6268

City of Victorville
N/S: I-15 Southbound Off Ramp
E/W: Joshua Street
Weather: Clear

File Name : 07_VIC_15S_Joshua AM
Site Code : 05122132
Start Date : 2/16/2022
Page No : 1

Groups Printed- 4+ Axle Trucks

	I-15 Southbound Off Ramp Southbound			Joshua Street Westbound			Joshua Street Eastbound			
Start Time	Left	Right	App. Total	Thru	Right	App. Total	Left	Thru	App. Total	Int. Total
07:00 AM	0	6	6	0	0	0	0	8	8	14
07:15 AM	0	6	6	0	0	0	0	8	8	14
07:30 AM	0	3	3	0	0	0	0	9	9	12
07:45 AM	0	4	4	0	0	0	0	4	4	8
Total	0	19	19	0	0	0	0	29	29	48
08:00 AM	0	5	5	0	0	0	0	4	4	9
08:15 AM	0	11	11	0	0	0	0	6	6	17
08:30 AM	0	7	7	0	0	0	0	4	4	11
08:45 AM	0	6	6	0	0	0	0	7	7	13
Total	0	29	29	0	0	0	0	21	21	50
Grand Total	0	48	48	0	0	0	0	50	50	98
Apprch %	0	100		0	0		0	100		
Total %	0	49	49	0	0	0	0	51	51	

	I-15 Southbound Off Ramp Southbound			Joshua Street Westbound			Joshua Street Eastbound			
Start Time	Left	Right	App. Total	Thru	Right	App. Total	Left	Thru	App. Total	Int. Total
Peak Hour Analysis From 07:45 AM to 08:30 AM - Peak 1 of 1										
Peak Hour for Entire Intersection Begins at 07:45 AM										
07:45 AM	0	4	4	0	0	0	0	4	4	8
08:00 AM	0	5	5	0	0	0	0	4	4	9
08:15 AM	0	**11**	**11**	0	0	0	0	**6**	**6**	**17**
08:30 AM	0	7	7	0	0	0	0	4	4	11
Total Volume	0	27	27	0	0	0	0	18	18	45
% App. Total	0	100		0	0		0	100		
PHF	.000	.614	.614	.000	.000	.000	.000	.750	.750	.662

Counts Unlimited, Inc.
PO Box 1178
Corona, CA 92878
(951)268-6268

City of Victorville
N/S: I-15 Southbound Off Ramp
E/W: Joshua Street
Weather: Clear

File Name : 07_VIC_15S_Joshua AM
Site Code : 05122132
Start Date : 2/16/2022
Page No : 2

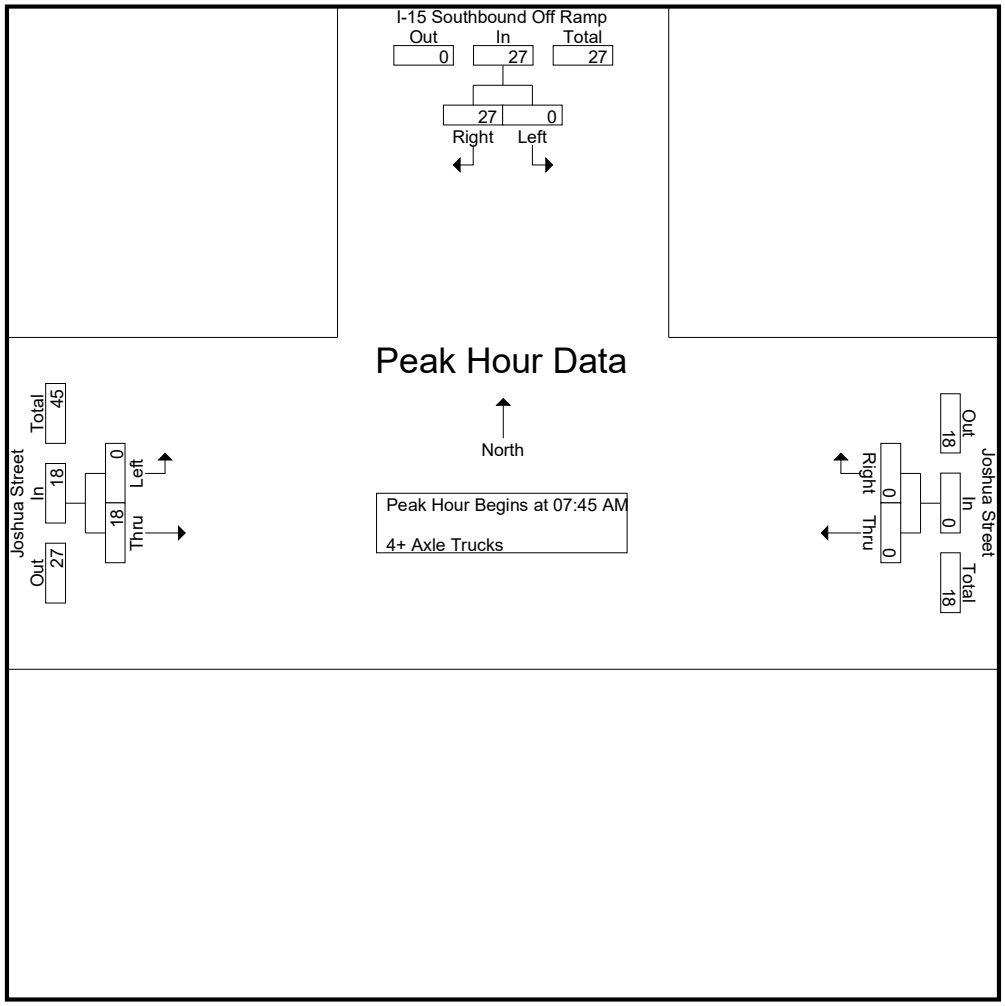

Peak Hour Analysis From 07:45 AM to 08:30 AM - Peak 1 of 1
Peak Hour for Each Approach Begins at:

	07:45 AM			07:45 AM			07:45 AM		
+0 mins.	0	4	4	0	0	0	0	4	4
+15 mins.	0	5	5	0	0	0	0	4	4
+30 mins.	0	**11**	**11**	0	0	0	0	**6**	**6**
+45 mins.	0	7	7	0	0	0	0	4	4
Total Volume	0	27	27	0	0	0	0	18	18
% App. Total	0	100		0	0		0	100	
PHF	.000	.614	.614	.000	.000	.000	.000	.750	.750

Counts Unlimited, Inc.
PO Box 1178
Corona, CA 92878
(951)268-6268

City of Victorville
N/S: I-15 Southbound Off Ramp
E/W: Joshua Street
Weather: Clear

File Name : 07_VIC_15S_Joshua PM
Site Code : 05122132
Start Date : 2/16/2022
Page No : 1

Groups Printed- Passenger Vehicles - Large 2 Axle Vehicles - 3 Axle Vehicles - 4+ Axle Trucks

	I-15 Southbound Off Ramp Southbound			Joshua Street Westbound			Joshua Street Eastbound			
Start Time	Left	Right	App. Total	Thru	Right	App. Total	Left	Thru	App. Total	Int. Total
04:00 PM	3	34	37	11	0	11	0	29	29	77
04:15 PM	7	29	36	14	0	14	0	39	39	89
04:30 PM	3	33	36	18	0	18	0	39	39	93
04:45 PM	9	30	39	14	0	14	0	35	35	88
Total	22	126	148	57	0	57	0	142	142	347
05:00 PM	6	23	29	20	0	20	0	33	33	82
05:15 PM	6	24	30	7	0	7	0	32	32	69
05:30 PM	3	25	28	7	0	7	0	45	45	80
05:45 PM	5	22	27	9	0	9	0	25	25	61
Total	20	94	114	43	0	43	0	135	135	292
Grand Total	42	220	262	100	0	100	0	277	277	639
Apprch %	16	84		100	0		0	100		
Total %	6.6	34.4	41	15.6	0	15.6	0	43.3	43.3	
Passenger Vehicles	39	130	169	96	0	96	0	219	219	484
% Passenger Vehicles	92.9	59.1	64.5	96	0	96	0	79.1	79.1	75.7
Large 2 Axle Vehicles	2	12	14	3	0	3	0	10	10	27
% Large 2 Axle Vehicles	4.8	5.5	5.3	3	0	3	0	3.6	3.6	4.2
3 Axle Vehicles	0	6	6	0	0	0	0	3	3	9
% 3 Axle Vehicles	0	2.7	2.3	0	0	0	0	1.1	1.1	1.4
4+ Axle Trucks	1	72	73	1	0	1	0	45	45	119
% 4+ Axle Trucks	2.4	32.7	27.9	1	0	1	0	16.2	16.2	18.6

	I-15 Southbound Off Ramp Southbound			Joshua Street Westbound			Joshua Street Eastbound			
Start Time	Left	Right	App. Total	Thru	Right	App. Total	Left	Thru	App. Total	Int. Total
Peak Hour Analysis From 04:00 PM to 05:45 PM - Peak 1 of 1										
Peak Hour for Entire Intersection Begins at 04:15 PM										
04:15 PM	7	29	36	14	0	14	0	**39**	**39**	89
04:30 PM	3	**33**	36	18	0	18	0	39	39	**93**
04:45 PM	**9**	30	**39**	14	0	14	0	35	35	88
05:00 PM	6	23	29	**20**	0	**20**	0	33	33	82
Total Volume	25	115	140	66	0	66	0	146	146	352
% App. Total	17.9	82.1		100	0		0	100		
PHF	.694	.871	.897	.825	.000	.825	.000	.936	.936	.946

Counts Unlimited, Inc.
PO Box 1178
Corona, CA 92878
(951)268-6268

City of Victorville
N/S: I-15 Southbound Off Ramp
E/W: Joshua Street
Weather: Clear

File Name : 07_VIC_15S_Joshua PM
Site Code : 05122132
Start Date : 2/16/2022
Page No : 2

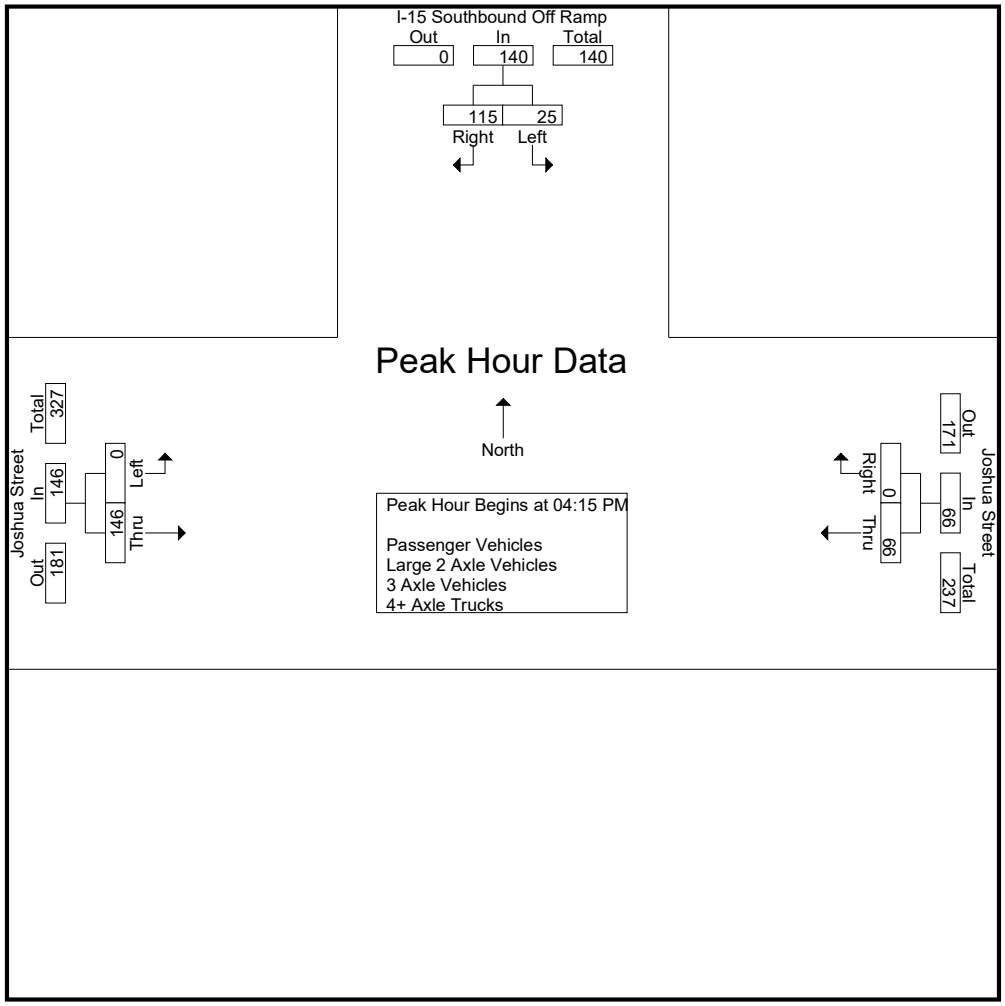

Peak Hour Analysis From 04:00 PM to 05:45 PM - Peak 1 of 1
Peak Hour for Each Approach Begins at:

	04:00 PM			04:15 PM			04:15 PM		
+0 mins.	3	**34**	37	14	0	14	0	**39**	**39**
+15 mins.	7	29	36	18	0	18	0	39	39
+30 mins.	3	33	36	14	0	14	0	35	35
+45 mins.	**9**	30	**39**	**20**	0	**20**	0	33	33
Total Volume	22	126	148	66	0	66	0	146	146
% App. Total	14.9	85.1		100	0		0	100	
PHF	.611	.926	.949	.825	.000	.825	.000	.936	.936

Counts Unlimited, Inc.
PO Box 1178
Corona, CA 92878
(951)268-6268

City of Victorville
N/S: I-15 Southbound Off Ramp
E/W: Joshua Street
Weather: Clear

File Name : 07_VIC_15S_Joshua PM
Site Code : 05122132
Start Date : 2/16/2022
Page No : 1

Groups Printed- Passenger Vehicles

	I-15 Southbound Off Ramp Southbound			Joshua Street Westbound			Joshua Street Eastbound			
Start Time	Left	Right	App. Total	Thru	Right	App. Total	Left	Thru	App. Total	Int. Total
04:00 PM	3	24	27	10	0	10	0	23	23	60
04:15 PM	7	15	22	14	0	14	0	30	30	66
04:30 PM	3	17	20	16	0	16	0	29	29	65
04:45 PM	8	18	26	14	0	14	0	28	28	68
Total	21	74	95	54	0	54	0	110	110	259
05:00 PM	5	17	22	20	0	20	0	27	27	69
05:15 PM	6	13	19	6	0	6	0	26	26	51
05:30 PM	3	14	17	7	0	7	0	39	39	63
05:45 PM	4	12	16	9	0	9	0	17	17	42
Total	18	56	74	42	0	42	0	109	109	225
Grand Total	39	130	169	96	0	96	0	219	219	484
Apprch %	23.1	76.9		100	0		0	100		
Total %	8.1	26.9	34.9	19.8	0	19.8	0	45.2	45.2	

	I-15 Southbound Off Ramp Southbound			Joshua Street Westbound			Joshua Street Eastbound			
Start Time	Left	Right	App. Total	Thru	Right	App. Total	Left	Thru	App. Total	Int. Total
Peak Hour Analysis From 04:15 PM to 05:00 PM - Peak 1 of 1										
Peak Hour for Entire Intersection Begins at 04:15 PM										
04:15 PM	7	15	22	14	0	14	0	**30**	**30**	66
04:30 PM	3	17	20	16	0	16	0	29	29	65
04:45 PM	**8**	**18**	**26**	14	0	14	0	28	28	68
05:00 PM	5	17	22	**20**	0	**20**	0	27	27	**69**
Total Volume	23	67	90	64	0	64	0	114	114	268
% App. Total	25.6	74.4		100	0		0	100		
PHF	.719	.931	.865	.800	.000	.800	.000	.950	.950	.971

Counts Unlimited, Inc.
PO Box 1178
Corona, CA 92878
(951)268-6268

City of Victorville
N/S: I-15 Southbound Off Ramp
E/W: Joshua Street
Weather: Clear

File Name : 07_VIC_15S_Joshua PM
Site Code : 05122132
Start Date : 2/16/2022
Page No : 2

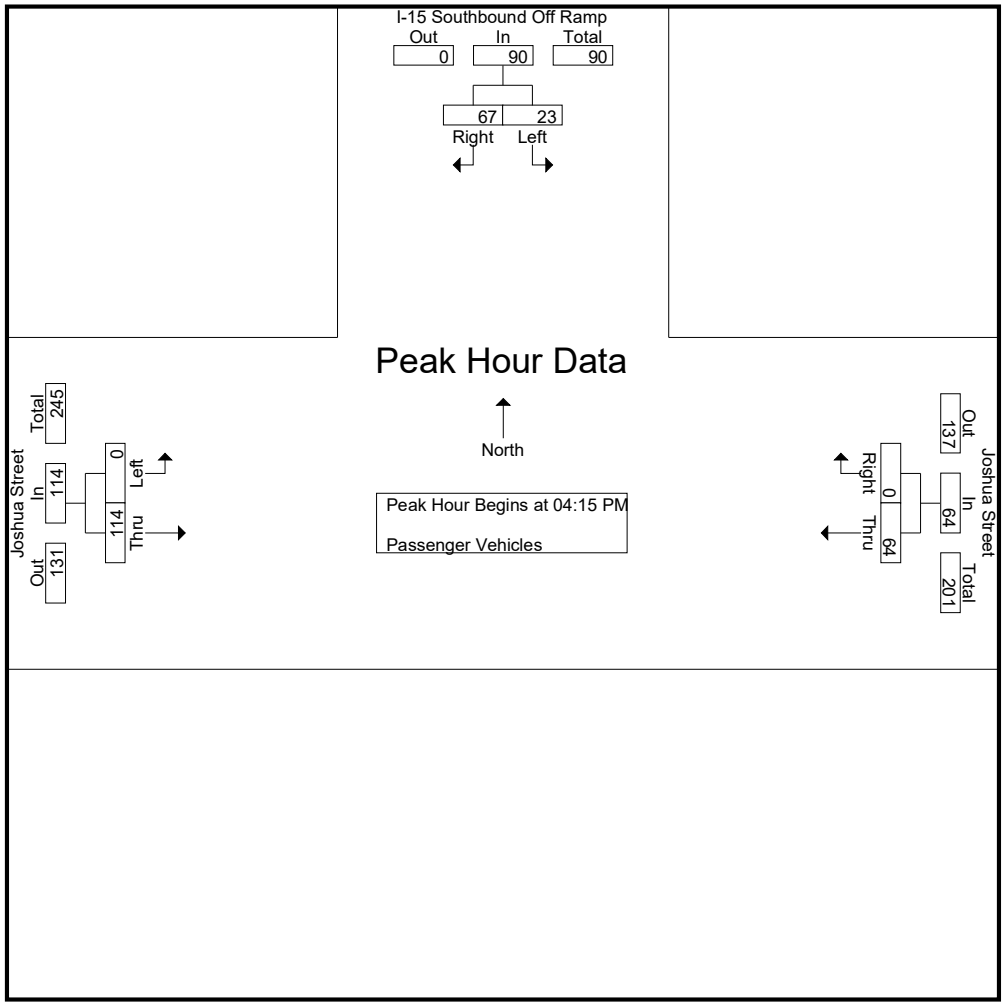

Peak Hour Analysis From 04:15 PM to 05:00 PM - Peak 1 of 1
Peak Hour for Each Approach Begins at:

	04:15 PM			04:15 PM			04:15 PM		
+0 mins.	7	15	22	14	0	14	0	**30**	**30**
+15 mins.	3	17	20	16	0	16	0	29	29
+30 mins.	**8**	**18**	**26**	14	0	14	0	28	28
+45 mins.	5	17	22	**20**	0	**20**	0	27	27
Total Volume	23	67	90	64	0	64	0	114	114
% App. Total	25.6	74.4		100	0		0	100	
PHF	.719	.931	.865	.800	.000	.800	.000	.950	.950

Counts Unlimited, Inc.
PO Box 1178
Corona, CA 92878
(951)268-6268

City of Victorville
N/S: I-15 Southbound Off Ramp
E/W: Joshua Street
Weather: Clear

File Name : 07_VIC_15S_Joshua PM
Site Code : 05122132
Start Date : 2/16/2022
Page No : 1

Groups Printed- Large 2 Axle Vehicles

	I-15 Southbound Off Ramp Southbound			Joshua Street Westbound			Joshua Street Eastbound			
Start Time	Left	Right	App. Total	Thru	Right	App. Total	Left	Thru	App. Total	Int. Total
04:00 PM	0	1	1	1	0	1	0	0	0	2
04:15 PM	0	3	3	0	0	0	0	1	1	4
04:30 PM	0	2	2	1	0	1	0	2	2	5
04:45 PM	1	0	1	0	0	0	0	3	3	4
Total	1	6	7	2	0	2	0	6	6	15
05:00 PM	1	1	2	0	0	0	0	0	0	2
05:15 PM	0	2	2	1	0	1	0	1	1	4
05:30 PM	0	2	2	0	0	0	0	1	1	3
05:45 PM	0	1	1	0	0	0	0	2	2	3
Total	1	6	7	1	0	1	0	4	4	12
Grand Total	2	12	14	3	0	3	0	10	10	27
Apprch %	14.3	85.7		100	0		0	100		
Total %	7.4	44.4	51.9	11.1	0	11.1	0	37	37	

	I-15 Southbound Off Ramp Southbound			Joshua Street Westbound			Joshua Street Eastbound			
Start Time	Left	Right	App. Total	Thru	Right	App. Total	Left	Thru	App. Total	Int. Total
Peak Hour Analysis From 04:15 PM to 05:00 PM - Peak 1 of 1										
Peak Hour for Entire Intersection Begins at 04:15 PM										
04:15 PM	0	**3**	**3**	0	0	0	0	1	1	4
04:30 PM	0	2	2	**1**	0	**1**	0	2	2	**5**
04:45 PM	**1**	0	1	0	0	0	0	**3**	**3**	4
05:00 PM	1	1	2	0	0	0	0	0	0	2
Total Volume	2	6	8	1	0	1	0	6	6	15
% App. Total	25	75		100	0		0	100		
PHF	.500	.500	.667	.250	.000	.250	.000	.500	.500	.750

Counts Unlimited, Inc.
PO Box 1178
Corona, CA 92878
(951)268-6268

City of Victorville
N/S: I-15 Southbound Off Ramp
E/W: Joshua Street
Weather: Clear

File Name : 07_VIC_15S_Joshua PM
Site Code : 05122132
Start Date : 2/16/2022
Page No : 2

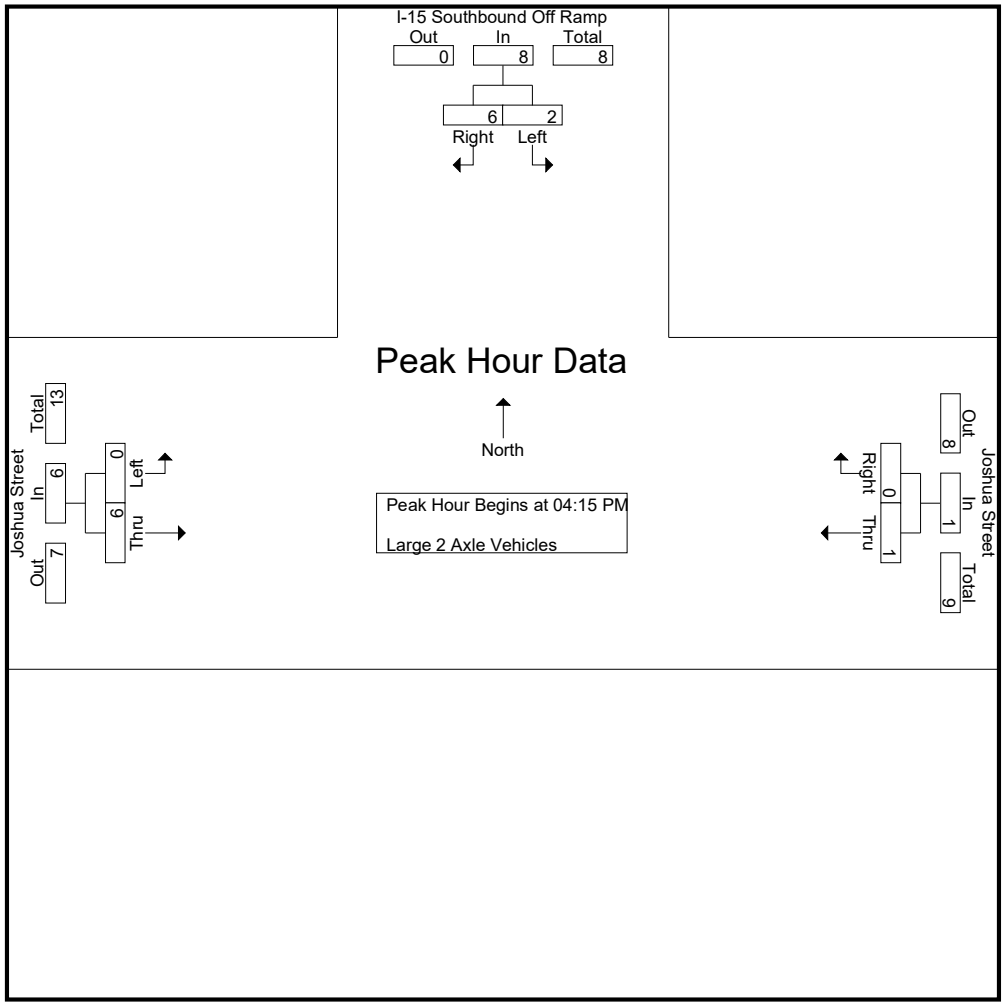

Peak Hour Analysis From 04:15 PM to 05:00 PM - Peak 1 of 1
Peak Hour for Each Approach Begins at:

	04:15 PM			04:15 PM			04:15 PM		
+0 mins.	0	**3**	**3**	0	0	0	0	1	1
+15 mins.	0	2	2	**1**	0	**1**	0	2	2
+30 mins.	**1**	0	1	0	0	0	0	**3**	**3**
+45 mins.	1	1	2	0	0	0	0	0	0
Total Volume	2	6	8	1	0	1	0	6	6
% App. Total	25	75		100	0		0	100	
PHF	.500	.500	.667	.250	.000	.250	.000	.500	.500

Counts Unlimited, Inc.
PO Box 1178
Corona, CA 92878
(951)268-6268

City of Victorville
N/S: I-15 Southbound Off Ramp
E/W: Joshua Street
Weather: Clear

File Name : 07_VIC_15S_Joshua PM
Site Code : 05122132
Start Date : 2/16/2022
Page No : 1

Groups Printed- 3 Axle Vehicles

	I-15 Southbound Off Ramp Southbound			Joshua Street Westbound			Joshua Street Eastbound			
Start Time	Left	Right	App. Total	Thru	Right	App. Total	Left	Thru	App. Total	Int. Total
04:00 PM	0	0	0	0	0	0	0	0	0	0
04:15 PM	0	0	0	0	0	0	0	1	1	1
04:30 PM	0	2	2	0	0	0	0	0	0	2
04:45 PM	0	2	2	0	0	0	0	0	0	2
Total	0	4	4	0	0	0	0	1	1	5
05:00 PM	0	0	0	0	0	0	0	1	1	1
05:15 PM	0	1	1	0	0	0	0	1	1	2
05:30 PM	0	1	1	0	0	0	0	0	0	1
05:45 PM	0	0	0	0	0	0	0	0	0	0
Total	0	2	2	0	0	0	0	2	2	4
Grand Total	0	6	6	0	0	0	0	3	3	9
Apprch %	0	100		0	0		0	100		
Total %	0	66.7	66.7	0	0	0	0	33.3	33.3	

	I-15 Southbound Off Ramp Southbound			Joshua Street Westbound			Joshua Street Eastbound			
Start Time	Left	Right	App. Total	Thru	Right	App. Total	Left	Thru	App. Total	Int. Total
Peak Hour Analysis From 04:15 PM to 05:00 PM - Peak 1 of 1										
Peak Hour for Entire Intersection Begins at 04:15 PM										
04:15 PM	0	0	0	0	0	0	0	**1**	**1**	1
04:30 PM	0	**2**	**2**	0	0	0	0	0	0	**2**
04:45 PM	0	2	2	0	0	0	0	0	0	2
05:00 PM	0	0	0	0	0	0	0	1	1	1
Total Volume	0	4	4	0	0	0	0	2	2	6
% App. Total	0	100		0	0		0	100		
PHF	.000	.500	.500	.000	.000	.000	.000	.500	.500	.750

Counts Unlimited, Inc.
PO Box 1178
Corona, CA 92878
(951)268-6268

City of Victorville
N/S: I-15 Southbound Off Ramp
E/W: Joshua Street
Weather: Clear

File Name : 07_VIC_15S_Joshua PM
Site Code : 05122132
Start Date : 2/16/2022
Page No : 2

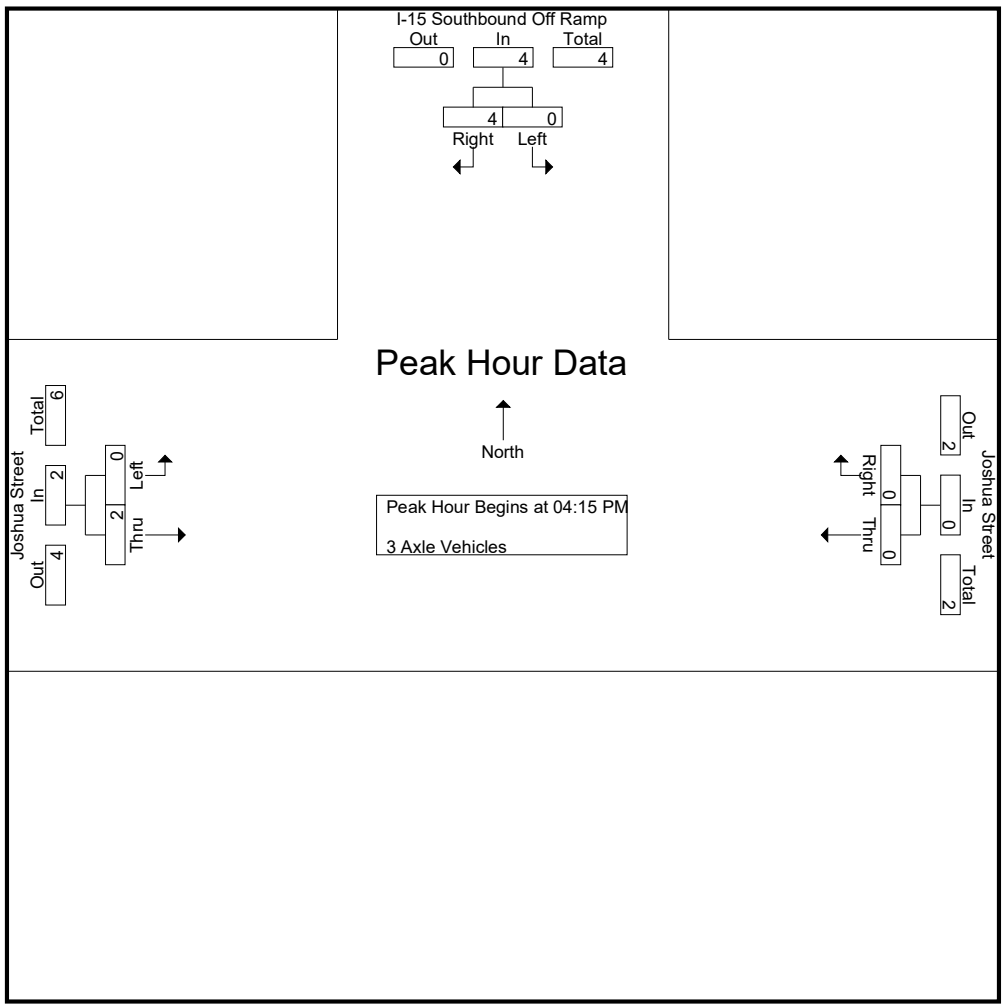

Peak Hour Analysis From 04:15 PM to 05:00 PM - Peak 1 of 1
Peak Hour for Each Approach Begins at:

	04:15 PM			04:15 PM			04:15 PM		
+0 mins.	0	0	0	0	0	0	0	**1**	**1**
+15 mins.	0	**2**	**2**	0	0	0	0	0	0
+30 mins.	0	2	2	0	0	0	0	0	0
+45 mins.	0	0	0	0	0	0	0	1	1
Total Volume	0	4	4	0	0	0	0	2	2
% App. Total	0	100		0	0		0	100	
PHF	.000	.500	.500	.000	.000	.000	.000	.500	.500

Counts Unlimited, Inc.
PO Box 1178
Corona, CA 92878
(951)268-6268

City of Victorville
N/S: I-15 Southbound Off Ramp
E/W: Joshua Street
Weather: Clear

File Name : 07_VIC_15S_Joshua PM
Site Code : 05122132
Start Date : 2/16/2022
Page No : 1

Groups Printed- 4+ Axle Trucks

	I-15 Southbound Off Ramp Southbound			Joshua Street Westbound			Joshua Street Eastbound			
Start Time	Left	Right	App. Total	Thru	Right	App. Total	Left	Thru	App. Total	Int. Total
04:00 PM	0	9	9	0	0	0	0	6	6	15
04:15 PM	0	11	11	0	0	0	0	7	7	18
04:30 PM	0	12	12	1	0	1	0	8	8	21
04:45 PM	0	10	10	0	0	0	0	4	4	14
Total	0	42	42	1	0	1	0	25	25	68
05:00 PM	0	5	5	0	0	0	0	5	5	10
05:15 PM	0	8	8	0	0	0	0	4	4	12
05:30 PM	0	8	8	0	0	0	0	5	5	13
05:45 PM	1	9	10	0	0	0	0	6	6	16
Total	1	30	31	0	0	0	0	20	20	51
Grand Total	1	72	73	1	0	1	0	45	45	119
Apprch %	1.4	98.6		100	0		0	100		
Total %	0.8	60.5	61.3	0.8	0	0.8	0	37.8	37.8	

	I-15 Southbound Off Ramp Southbound			Joshua Street Westbound			Joshua Street Eastbound			
Start Time	Left	Right	App. Total	Thru	Right	App. Total	Left	Thru	App. Total	Int. Total
Peak Hour Analysis From 04:15 PM to 05:00 PM - Peak 1 of 1										
Peak Hour for Entire Intersection Begins at 04:15 PM										
04:15 PM	0	11	11	0	0	0	0	7	7	18
04:30 PM	0	**12**	**12**	**1**	0	**1**	0	**8**	**8**	**21**
04:45 PM	0	10	10	0	0	0	0	4	4	14
05:00 PM	0	5	5	0	0	0	0	5	5	10
Total Volume	0	38	38	1	0	1	0	24	24	63
% App. Total	0	100		100	0		0	100		
PHF	.000	.792	.792	.250	.000	.250	.000	.750	.750	.750

Counts Unlimited, Inc.
PO Box 1178
Corona, CA 92878
(951)268-6268

City of Victorville
N/S: I-15 Southbound Off Ramp
E/W: Joshua Street
Weather: Clear

File Name : 07_VIC_15S_Joshua PM
Site Code : 05122132
Start Date : 2/16/2022
Page No : 2

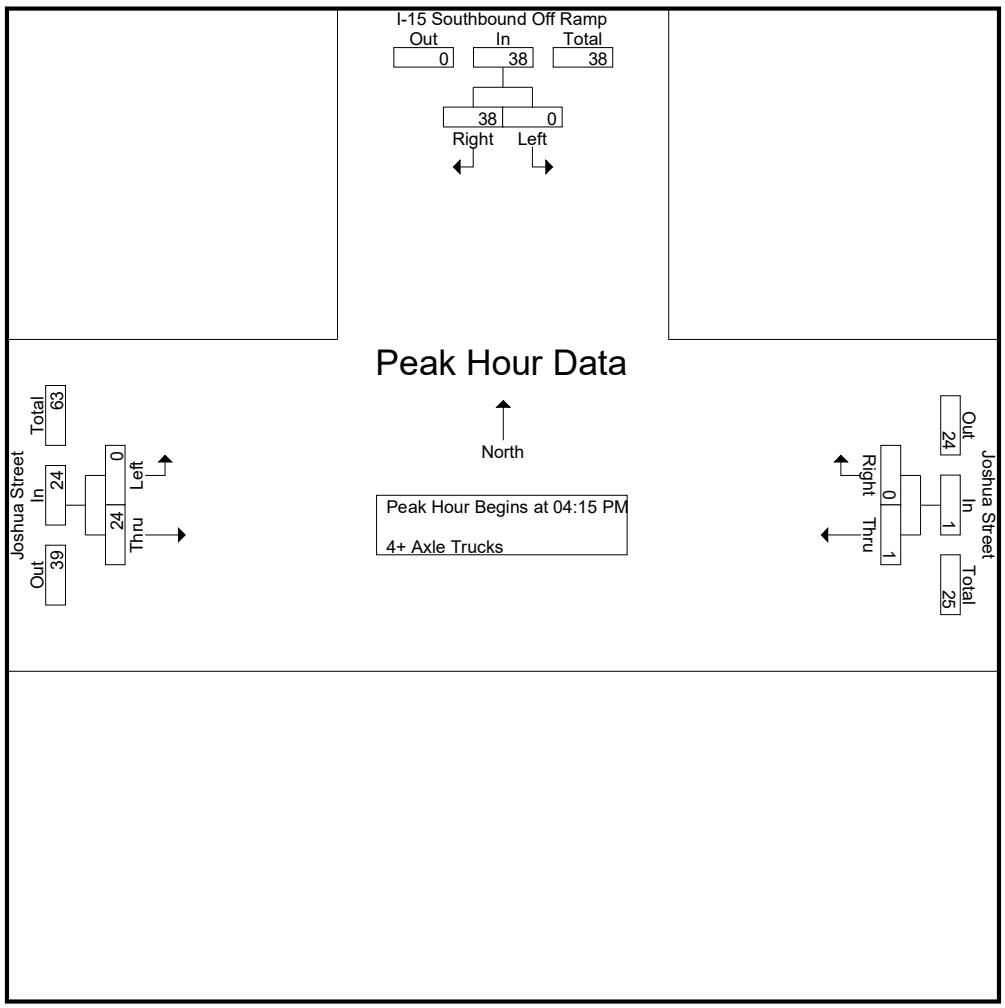

Peak Hour Analysis From 04:15 PM to 05:00 PM - Peak 1 of 1
Peak Hour for Each Approach Begins at:

	04:15 PM			04:15 PM			04:15 PM		
+0 mins.	0	11	11	0	0	0	0	7	7
+15 mins.	0	**12**	**12**	**1**	0	**1**	0	**8**	**8**
+30 mins.	0	10	10	0	0	0	0	4	4
+45 mins.	0	5	5	0	0	0	0	5	5
Total Volume	0	38	38	1	0	1	0	24	24
% App. Total	0	100		100	0		0	100	
PHF	.000	.792	.792	.250	.000	.250	.000	.750	.750

Location: Victorville
N/S: I-15 SB Off Ramp
E/W: Joshua Street

Date: 4/12/2018
Day: Wednesday

PEDESTRIANS

	North Leg I-15 SB Off Ramp	East Leg Joshua Street	South Leg Dead End	West Leg Joshua Street	
	Pedestrians	Pedestrians	Pedestrians	Pedestrians	
7:00 AM	0	0	0	0	0
7:15 AM	0	0	0	0	0
7:30 AM	0	0	0	0	0
7:45 AM	0	0	0	0	0
8:00 AM	0	0	0	0	0
8:15 AM	0	0	0	0	0
8:30 AM	1	0	0	0	1
8:45 AM	0	0	0	0	0
TOTAL VOLUMES:	1	0	0	0	1

	North Leg I-15 SB Off Ramp	East Leg Joshua Street	South Leg Dead End	West Leg Joshua Street	
	Pedestrians	Pedestrians	Pedestrians	Pedestrians	
4:00 PM	0	0	0	0	0
4:15 PM	0	0	0	0	0
4:30 PM	0	0	0	0	0
4:45 PM	0	0	0	0	0
5:00 PM	0	0	0	0	0
5:15 PM	0	0	0	0	0
5:30 PM	0	0	0	0	0
5:45 PM	0	0	0	0	0
TOTAL VOLUMES:	0	0	0	0	0

Location: Victorville
N/S: I-15 SB Off Ramp
E/W: Joshua Street

Date: 4/12/2018
Day: Wednesday

BICYCLES

	Southbound I-15 SB Off Ramp			Westbound Joshua Street			Northbound Dead End			Eastbound Joshua Street			
	Left	Thru	Right	Left	Thru	Right	Left	Thru	Right	Left	Thru	Right	
7:00 AM	0	0	0	0	0	0	0	0	0	0	0	0	0
7:15 AM	0	0	0	0	0	0	0	0	0	0	0	0	0
7:30 AM	0	0	0	0	0	0	0	0	0	0	0	0	0
7:45 AM	0	0	0	0	0	0	0	0	0	0	0	0	0
8:00 AM	0	0	0	0	0	0	0	0	0	0	0	0	0
8:15 AM	0	0	0	0	0	0	0	0	0	0	0	0	0
8:30 AM	0	0	0	0	0	0	0	0	0	0	0	0	0
8:45 AM	0	0	0	0	0	0	0	0	0	0	0	0	0
TOTAL VOLUMES:	0	0	0	0	0	0	0	0	0	0	0	0	0

	Southbound I-15 SB Off Ramp			Westbound Joshua Street			Northbound Dead End			Eastbound Joshua Street			
	Left	Thru	Right	Left	Thru	Right	Left	Thru	Right	Left	Thru	Right	
4:00 PM	0	0	0	0	0	0	0	0	0	0	0	0	0
4:15 PM	0	0	0	0	0	0	0	0	0	0	0	0	0
4:30 PM	0	0	0	0	0	0	0	0	0	0	0	0	0
4:45 PM	0	0	0	0	0	0	0	0	0	0	0	0	0
5:00 PM	0	0	0	0	0	0	0	0	0	0	0	0	0
5:15 PM	0	0	0	0	0	0	0	0	0	0	0	0	0
5:30 PM	0	0	0	0	0	0	0	0	0	0	0	0	0
5:45 PM	0	0	0	0	0	0	0	0	0	0	0	0	0
TOTAL VOLUMES:	0	0	0	0	0	0	0	0	0	0	0	0	0

Counts Unlimited, Inc.
PO Box 1178
Corona, CA 92878
951-268-6268

Counts Unlimited, Inc.
PO Box 1178
Corona, CA 92878
(951)268-6268

City of Victorville
N/S: I-15 Northbound On Ramp
E/W: Joshua Street
Weather: Clear

File Name : 08_VIC_15N_Joshua AM
Site Code : 05122132
Start Date : 2/16/2022
Page No : 1

Groups Printed- Passenger Vehicles - Large 2 Axle Vehicles - 3 Axle Vehicles - 4+ Axle Trucks

	I-15 Northbound On Ramp Southbound			Joshua Street Westbound			Joshua Street Eastbound			
Start Time	Left	Right	App. Total	Thru	Right	App. Total	Left	Thru	App. Total	Int. Total
07:00 AM	0	0	0	7	0	7	16	11	27	34
07:15 AM	0	0	0	4	2	6	14	10	24	30
07:30 AM	0	0	0	9	2	11	15	9	24	35
07:45 AM	0	0	0	11	2	13	9	13	22	35
Total	0	0	0	31	6	37	54	43	97	134
08:00 AM	0	0	0	11	0	11	13	10	23	34
08:15 AM	0	0	0	9	0	9	12	16	28	37
08:30 AM	0	0	0	6	2	8	13	13	26	34
08:45 AM	0	0	0	11	2	13	13	1	14	27
Total	0	0	0	37	4	41	51	40	91	132
Grand Total	0	0	0	68	10	78	105	83	188	266
Apprch %	0	0		87.2	12.8		55.9	44.1		
Total %	0	0	0	25.6	3.8	29.3	39.5	31.2	70.7	
Passenger Vehicles	0	0	0	64	10	74	48	79	127	201
% Passenger Vehicles	0	0	0	94.1	100	94.9	45.7	95.2	67.6	75.6
Large 2 Axle Vehicles	0	0	0	3	0	3	5	4	9	12
% Large 2 Axle Vehicles	0	0	0	4.4	0	3.8	4.8	4.8	4.8	4.5
3 Axle Vehicles	0	0	0	1	0	1	2	0	2	3
% 3 Axle Vehicles	0	0	0	1.5	0	1.3	1.9	0	1.1	1.1
4+ Axle Trucks	0	0	0	0	0	0	50	0	50	50
% 4+ Axle Trucks	0	0	0	0	0	0	47.6	0	26.6	18.8

	I-15 Northbound On Ramp Southbound			Joshua Street Westbound			Joshua Street Eastbound			
Start Time	Left	Right	App. Total	Thru	Right	App. Total	Left	Thru	App. Total	Int. Total
Peak Hour Analysis From 07:00 AM to 08:45 AM - Peak 1 of 1										
Peak Hour for Entire Intersection Begins at 07:30 AM										
07:30 AM	0	0	0	9	**2**	11	**15**	9	24	35
07:45 AM	0	0	0	**11**	2	**13**	9	13	22	35
08:00 AM	0	0	0	11	0	11	13	10	23	34
08:15 AM	0	0	0	9	0	9	12	**16**	**28**	**37**
Total Volume	0	0	0	40	4	44	49	48	97	141
% App. Total	0	0		90.9	9.1		50.5	49.5		
PHF	.000	.000	.000	.909	.500	.846	.817	.750	.866	.953

Counts Unlimited, Inc.
PO Box 1178
Corona, CA 92878
(951)268-6268

City of Victorville
N/S: I-15 Northbound On Ramp
E/W: Joshua Street
Weather: Clear

File Name : 08_VIC_15N_Joshua AM
Site Code : 05122132
Start Date : 2/16/2022
Page No : 2

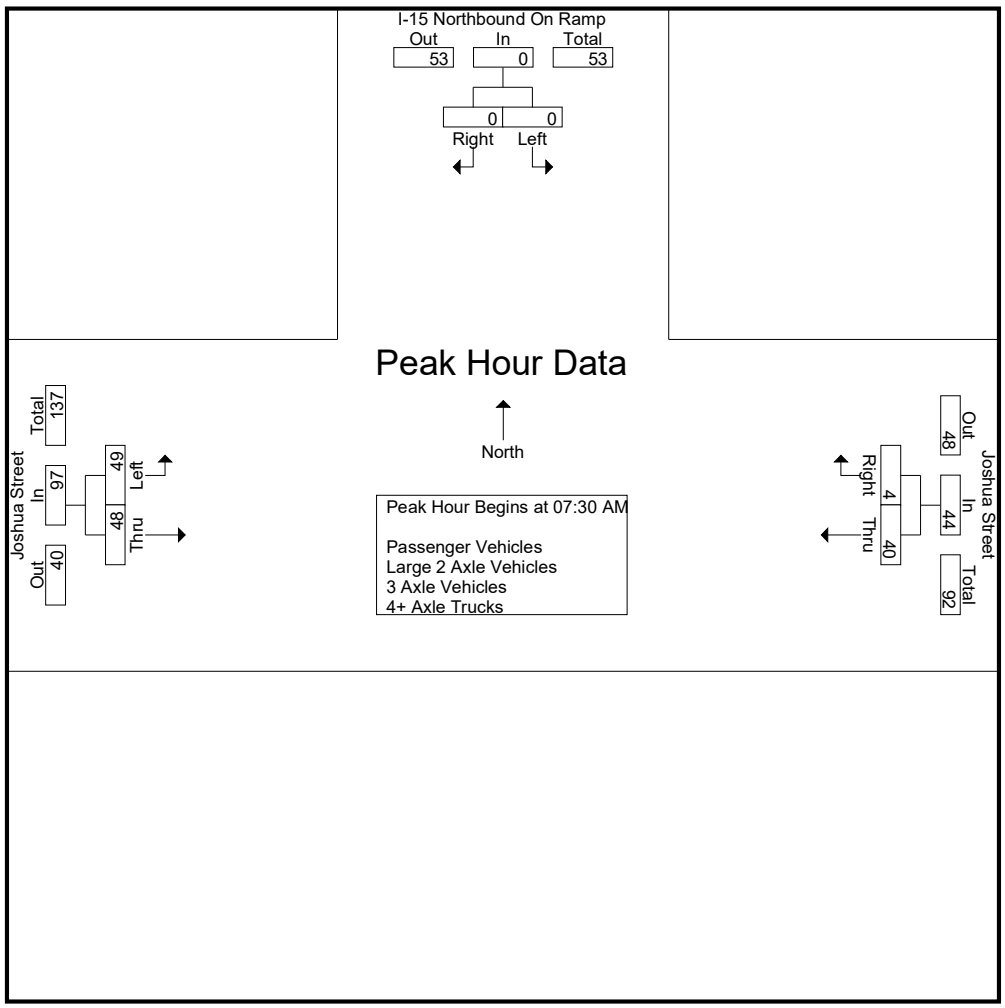

Peak Hour Analysis From 07:00 AM to 08:45 AM - Peak 1 of 1
Peak Hour for Each Approach Begins at:

	07:00 AM			07:30 AM			07:45 AM		
+0 mins.	0	0	0	9	**2**	11	9	13	22
+15 mins.	0	0	0	**11**	2	**13**	**13**	10	23
+30 mins.	0	0	0	11	0	11	12	**16**	**28**
+45 mins.	0	0	0	9	0	9	13	13	26
Total Volume	0	0	0	40	4	44	47	52	99
% App. Total	0	0		90.9	9.1		47.5	52.5	
PHF	.000	.000	.000	.909	.500	.846	.904	.813	.884

Counts Unlimited, Inc.
PO Box 1178
Corona, CA 92878
(951)268-6268

City of Victorville
N/S: I-15 Northbound On Ramp
E/W: Joshua Street
Weather: Clear

File Name : 08_VIC_15N_Joshua AM
Site Code : 05122132
Start Date : 2/16/2022
Page No : 1

Groups Printed- Passenger Vehicles

	I-15 Northbound On Ramp Southbound			Joshua Street Westbound			Joshua Street Eastbound			
Start Time	Left	Right	App. Total	Thru	Right	App. Total	Left	Thru	App. Total	Int. Total
07:00 AM	0	0	0	7	0	7	6	11	17	24
07:15 AM	0	0	0	3	2	5	5	9	14	19
07:30 AM	0	0	0	9	2	11	5	9	14	25
07:45 AM	0	0	0	11	2	13	4	12	16	29
Total	0	0	0	30	6	36	20	41	61	97
08:00 AM	0	0	0	10	0	10	8	8	16	26
08:15 AM	0	0	0	8	0	8	6	16	22	30
08:30 AM	0	0	0	5	2	7	8	13	21	28
08:45 AM	0	0	0	11	2	13	6	1	7	20
Total	0	0	0	34	4	38	28	38	66	104
Grand Total	0	0	0	64	10	74	48	79	127	201
Apprch %	0	0		86.5	13.5		37.8	62.2		
Total %	0	0	0	31.8	5	36.8	23.9	39.3	63.2	

	I-15 Northbound On Ramp Southbound			Joshua Street Westbound			Joshua Street Eastbound			
Start Time	Left	Right	App. Total	Thru	Right	App. Total	Left	Thru	App. Total	Int. Total
Peak Hour Analysis From 07:30 AM to 08:15 AM - Peak 1 of 1										
Peak Hour for Entire Intersection Begins at 07:30 AM										
07:30 AM	0	0	0	9	**2**	11	5	9	14	25
07:45 AM	0	0	0	**11**	2	**13**	4	12	16	29
08:00 AM	0	0	0	10	0	10	**8**	8	16	26
08:15 AM	0	0	0	8	0	8	6	**16**	**22**	**30**
Total Volume	0	0	0	38	4	42	23	45	68	110
% App. Total	0	0		90.5	9.5		33.8	66.2		
PHF	.000	.000	.000	.864	.500	.808	.719	.703	.773	.917

Counts Unlimited, Inc.
PO Box 1178
Corona, CA 92878
(951)268-6268

City of Victorville
N/S: I-15 Northbound On Ramp
E/W: Joshua Street
Weather: Clear

File Name : 08_VIC_15N_Joshua AM
Site Code : 05122132
Start Date : 2/16/2022
Page No : 2

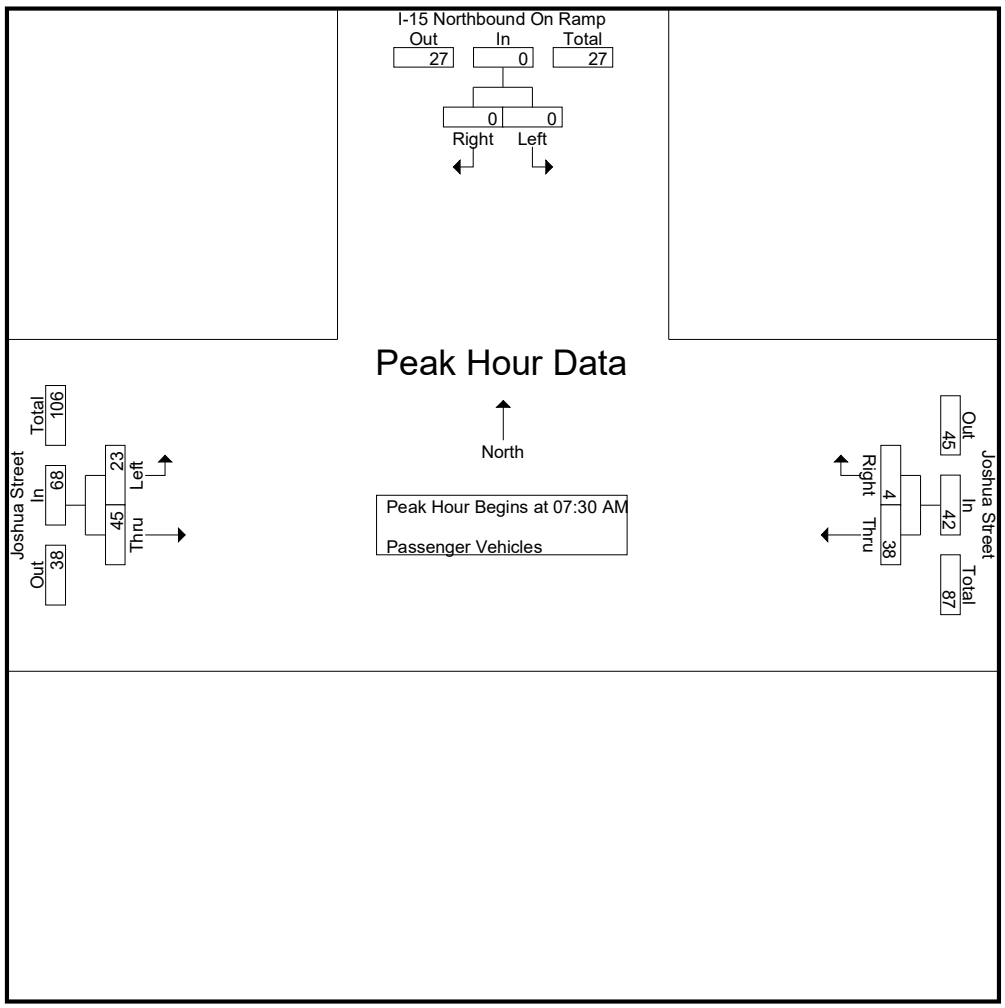

Peak Hour Analysis From 07:30 AM to 08:15 AM - Peak 1 of 1
Peak Hour for Each Approach Begins at:

	07:30 AM			07:30 AM			07:30 AM		
+0 mins.	0	0	0	9	**2**	11	5	9	14
+15 mins.	0	0	0	**11**	2	**13**	4	12	16
+30 mins.	0	0	0	10	0	10	**8**	8	16
+45 mins.	0	0	0	8	0	8	6	**16**	**22**
Total Volume	0	0	0	38	4	42	23	45	68
% App. Total	0	0		90.5	9.5		33.8	66.2	
PHF	.000	.000	.000	.864	.500	.808	.719	.703	.773

Counts Unlimited, Inc.
PO Box 1178
Corona, CA 92878
(951)268-6268

City of Victorville
N/S: I-15 Northbound On Ramp
E/W: Joshua Street
Weather: Clear

File Name : 08_VIC_15N_Joshua AM
Site Code : 05122132
Start Date : 2/16/2022
Page No : 1

Groups Printed- Large 2 Axle Vehicles

	I-15 Northbound On Ramp Southbound			Joshua Street Westbound			Joshua Street Eastbound			
Start Time	Left	Right	App. Total	Thru	Right	App. Total	Left	Thru	App. Total	Int. Total
07:00 AM	0	0	0	0	0	0	1	0	1	1
07:15 AM	0	0	0	1	0	1	0	1	1	2
07:30 AM	0	0	0	0	0	0	1	0	1	1
07:45 AM	0	0	0	0	0	0	1	1	2	2
Total	0	0	0	1	0	1	3	2	5	6
08:00 AM	0	0	0	1	0	1	1	2	3	4
08:15 AM	0	0	0	1	0	1	0	0	0	1
08:30 AM	0	0	0	0	0	0	1	0	1	1
08:45 AM	0	0	0	0	0	0	0	0	0	0
Total	0	0	0	2	0	2	2	2	4	6
Grand Total	0	0	0	3	0	3	5	4	9	12
Apprch %	0	0		100	0		55.6	44.4		
Total %	0	0	0	25	0	25	41.7	33.3	75	

	I-15 Northbound On Ramp Southbound			Joshua Street Westbound			Joshua Street Eastbound			
Start Time	Left	Right	App. Total	Thru	Right	App. Total	Left	Thru	App. Total	Int. Total
Peak Hour Analysis From 07:30 AM to 08:15 AM - Peak 1 of 1										
Peak Hour for Entire Intersection Begins at 07:30 AM										
07:30 AM	0	0	0	0	0	0	**1**	0	1	1
07:45 AM	0	0	0	0	0	0	1	1	2	2
08:00 AM	0	0	0	**1**	0	**1**	1	**2**	**3**	**4**
08:15 AM	0	0	0	1	0	1	0	0	0	1
Total Volume	0	0	0	2	0	2	3	3	6	8
% App. Total	0	0		100	0		50	50		
PHF	.000	.000	.000	.500	.000	.500	.750	.375	.500	.500

Counts Unlimited, Inc.
PO Box 1178
Corona, CA 92878
(951)268-6268

City of Victorville
N/S: I-15 Northbound On Ramp
E/W: Joshua Street
Weather: Clear

File Name : 08_VIC_15N_Joshua AM
Site Code : 05122132
Start Date : 2/16/2022
Page No : 2

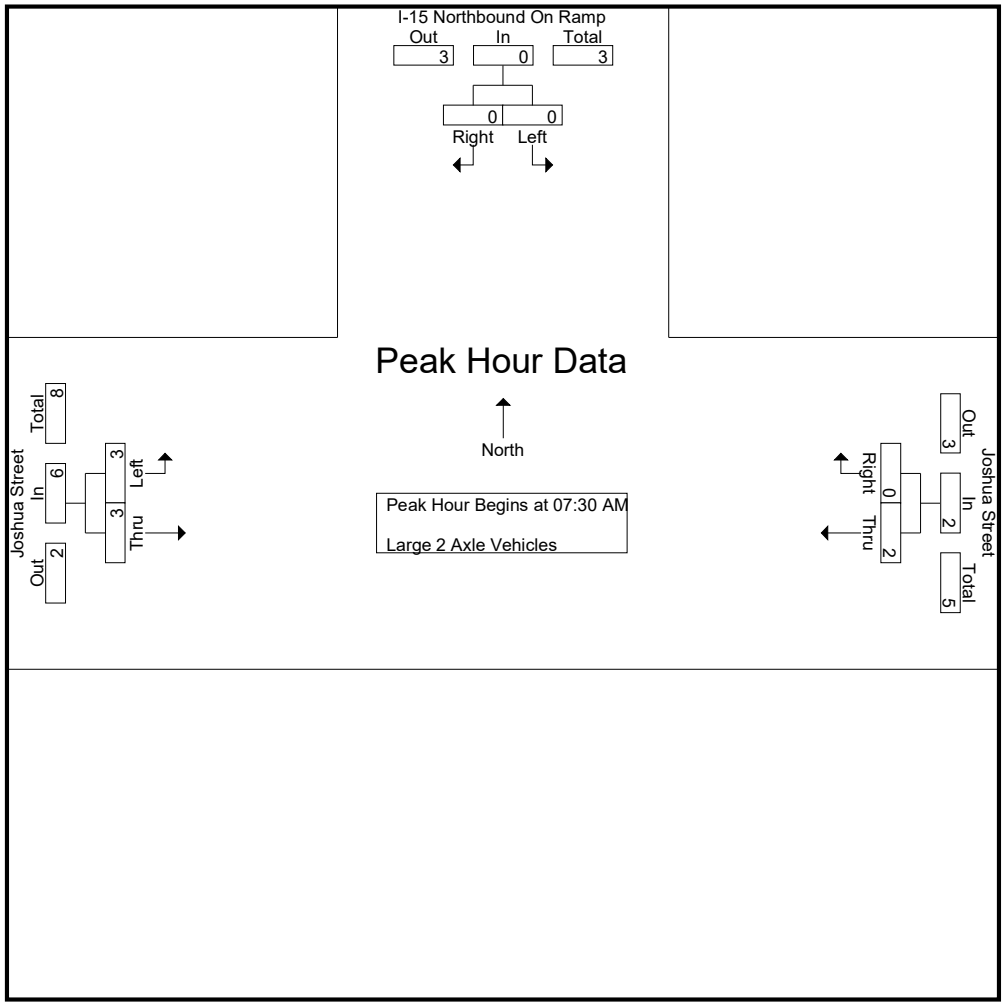

Peak Hour Analysis From 07:30 AM to 08:15 AM - Peak 1 of 1
Peak Hour for Each Approach Begins at:

	07:30 AM			07:30 AM			07:30 AM		
+0 mins.	0	0	0	0	0	0	**1**	0	1
+15 mins.	0	0	0	0	0	0	1	1	2
+30 mins.	0	0	0	**1**	0	**1**	1	**2**	**3**
+45 mins.	0	0	0	1	0	1	0	0	0
Total Volume	0	0	0	2	0	2	3	3	6
% App. Total	0	0		100	0		50	50	
PHF	.000	.000	.000	.500	.000	.500	.750	.375	.500

Counts Unlimited, Inc.
PO Box 1178
Corona, CA 92878
(951)268-6268

City of Victorville
N/S: I-15 Northbound On Ramp
E/W: Joshua Street
Weather: Clear

File Name : 08_VIC_15N_Joshua AM
Site Code : 05122132
Start Date : 2/16/2022
Page No : 1

Groups Printed- 3 Axle Vehicles

	I-15 Northbound On Ramp Southbound			Joshua Street Westbound			Joshua Street Eastbound			
Start Time	Left	Right	App. Total	Thru	Right	App. Total	Left	Thru	App. Total	Int. Total
07:00 AM	0	0	0	0	0	0	1	0	1	1
07:15 AM	0	0	0	0	0	0	1	0	1	1
07:30 AM	0	0	0	0	0	0	0	0	0	0
07:45 AM	0	0	0	0	0	0	0	0	0	0
Total	0	0	0	0	0	0	2	0	2	2
08:00 AM	0	0	0	0	0	0	0	0	0	0
08:15 AM	0	0	0	0	0	0	0	0	0	0
08:30 AM	0	0	0	1	0	1	0	0	0	1
08:45 AM	0	0	0	0	0	0	0	0	0	0
Total	0	0	0	1	0	1	0	0	0	1
Grand Total	0	0	0	1	0	1	2	0	2	3
Apprch %	0	0		100	0		100	0		
Total %	0	0	0	33.3	0	33.3	66.7	0	66.7	

	I-15 Northbound On Ramp Southbound			Joshua Street Westbound			Joshua Street Eastbound			
Start Time	Left	Right	App. Total	Thru	Right	App. Total	Left	Thru	App. Total	Int. Total
Peak Hour Analysis From 07:30 AM to 08:15 AM - Peak 1 of 1										
Peak Hour for Entire Intersection Begins at 07:30 AM										
07:30 AM	0	0	0	0	0	0	0	0	0	0
07:45 AM	0	0	0	0	0	0	0	0	0	0
08:00 AM	0	0	0	0	0	0	0	0	0	0
08:15 AM	0	0	0	0	0	0	0	0	0	0
Total Volume	0	0	0	0	0	0	0	0	0	0
% App. Total	0	0		0	0		0	0		
PHF	.000	.000	.000	.000	.000	.000	.000	.000	.000	.000

Counts Unlimited, Inc.
PO Box 1178
Corona, CA 92878
(951)268-6268

City of Victorville
N/S: I-15 Northbound On Ramp
E/W: Joshua Street
Weather: Clear

File Name : 08_VIC_15N_Joshua AM
Site Code : 05122132
Start Date : 2/16/2022
Page No : 2

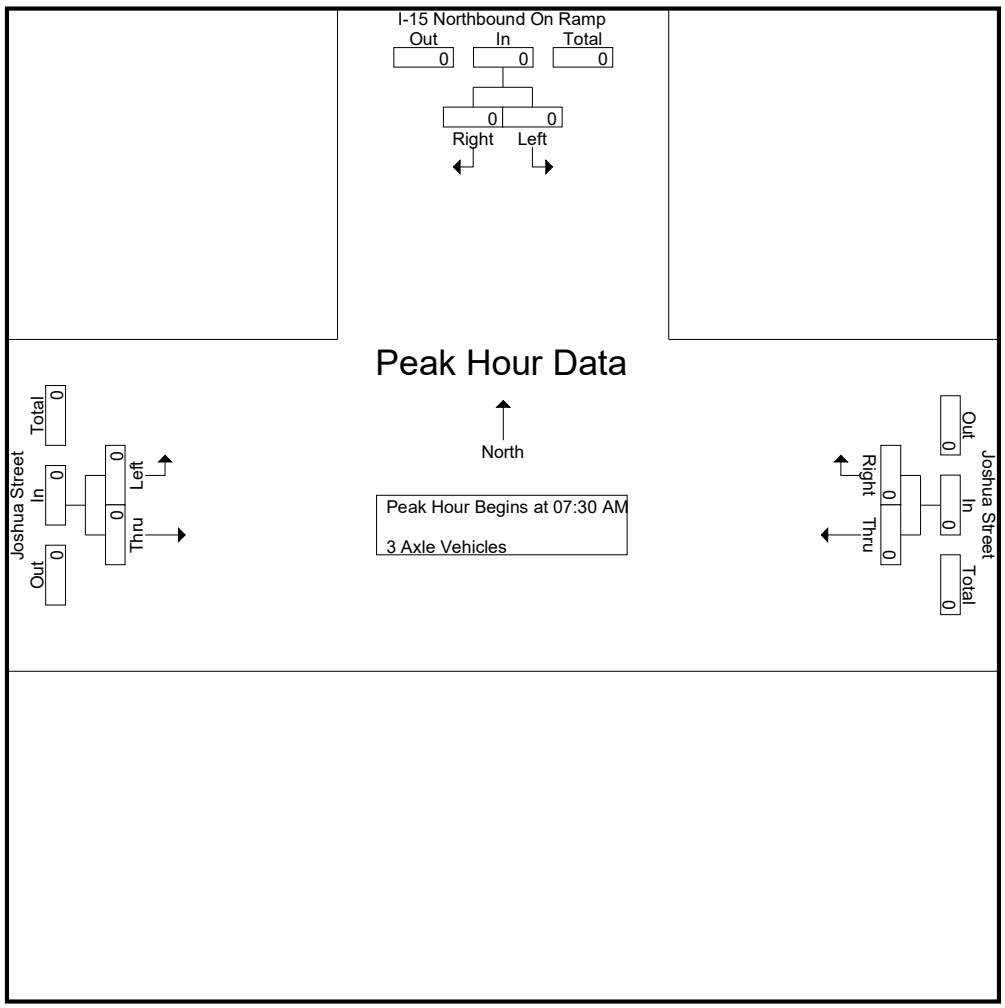

Peak Hour Analysis From 07:30 AM to 08:15 AM - Peak 1 of 1
Peak Hour for Each Approach Begins at:

	07:30 AM			07:30 AM			07:30 AM		
+0 mins.	0	0	0	0	0	0	0	0	0
+15 mins.	0	0	0	0	0	0	0	0	0
+30 mins.	0	0	0	0	0	0	0	0	0
+45 mins.	0	0	0	0	0	0	0	0	0
Total Volume	0	0	0	0	0	0	0	0	0
% App. Total	0	0		0	0		0	0	
PHF	.000	.000	.000	.000	.000	.000	.000	.000	.000

Counts Unlimited, Inc.
PO Box 1178
Corona, CA 92878
(951)268-6268

City of Victorville
N/S: I-15 Northbound On Ramp
E/W: Joshua Street
Weather: Clear

File Name : 08_VIC_15N_Joshua AM
Site Code : 05122132
Start Date : 2/16/2022
Page No : 1

Groups Printed- 4+ Axle Trucks

	I-15 Northbound On Ramp Southbound			Joshua Street Westbound			Joshua Street Eastbound			
Start Time	Left	Right	App. Total	Thru	Right	App. Total	Left	Thru	App. Total	Int. Total
07:00 AM	0	0	0	0	0	0	8	0	8	8
07:15 AM	0	0	0	0	0	0	8	0	8	8
07:30 AM	0	0	0	0	0	0	9	0	9	9
07:45 AM	0	0	0	0	0	0	4	0	4	4
Total	0	0	0	0	0	0	29	0	29	29
08:00 AM	0	0	0	0	0	0	4	0	4	4
08:15 AM	0	0	0	0	0	0	6	0	6	6
08:30 AM	0	0	0	0	0	0	4	0	4	4
08:45 AM	0	0	0	0	0	0	7	0	7	7
Total	0	0	0	0	0	0	21	0	21	21
Grand Total	0	0	0	0	0	0	50	0	50	50
Apprch %	0	0		0	0		100	0		
Total %	0	0	0	0	0	0	100	0	100	

	I-15 Northbound On Ramp Southbound			Joshua Street Westbound			Joshua Street Eastbound			
Start Time	Left	Right	App. Total	Thru	Right	App. Total	Left	Thru	App. Total	Int. Total
Peak Hour Analysis From 07:30 AM to 08:15 AM - Peak 1 of 1										
Peak Hour for Entire Intersection Begins at 07:30 AM										
07:30 AM	0	0	0	0	0	0	**9**	0	**9**	**9**
07:45 AM	0	0	0	0	0	0	4	0	4	4
08:00 AM	0	0	0	0	0	0	4	0	4	4
08:15 AM	0	0	0	0	0	0	6	0	6	6
Total Volume	0	0	0	0	0	0	23	0	23	23
% App. Total	0	0		0	0		100	0		
PHF	.000	.000	.000	.000	.000	.000	.639	.000	.639	.639

Counts Unlimited, Inc.
PO Box 1178
Corona, CA 92878
(951)268-6268

City of Victorville
N/S: I-15 Northbound On Ramp
E/W: Joshua Street
Weather: Clear

File Name : 08_VIC_15N_Joshua AM
Site Code : 05122132
Start Date : 2/16/2022
Page No : 2

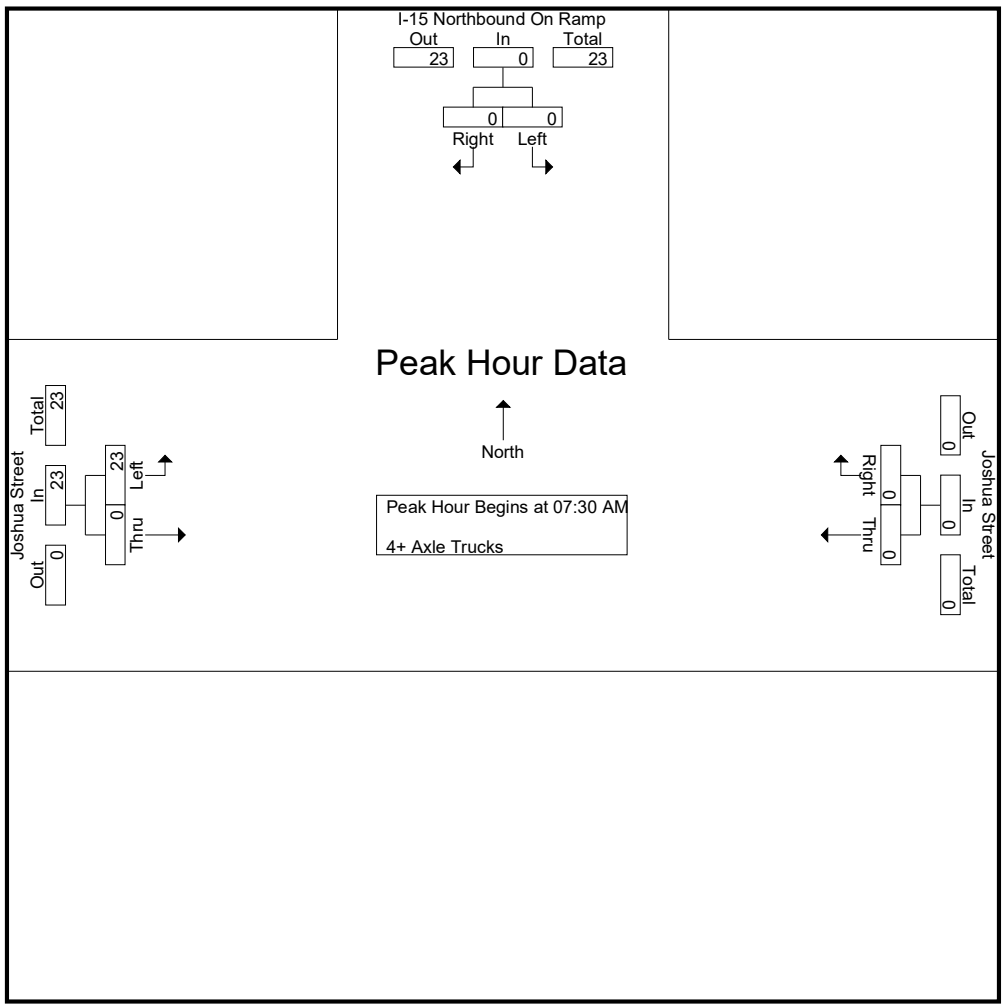

Peak Hour Analysis From 07:30 AM to 08:15 AM - Peak 1 of 1
Peak Hour for Each Approach Begins at:

	07:30 AM			07:30 AM			07:30 AM		
+0 mins.	0	0	0	0	0	0	**9**	0	**9**
+15 mins.	0	0	0	0	0	0	4	0	4
+30 mins.	0	0	0	0	0	0	4	0	4
+45 mins.	0	0	0	0	0	0	6	0	6
Total Volume	0	0	0	0	0	0	23	0	23
% App. Total	0	0		0	0		100	0	
PHF	.000	.000	.000	.000	.000	.000	.639	.000	.639

Counts Unlimited, Inc.
PO Box 1178
Corona, CA 92878
(951)268-6268

City of Victorville
N/S: I-15 Northbound On Ramp
E/W: Joshua Street
Weather: Clear

File Name : 08_VIC_15N_Joshua PM
Site Code : 05122132
Start Date : 2/16/2022
Page No : 1

Groups Printed- Passenger Vehicles - Large 2 Axle Vehicles - 3 Axle Vehicles - 4+ Axle Trucks

	I-15 Northbound On Ramp Southbound			Joshua Street Westbound			Joshua Street Eastbound			
Start Time	Left	Right	App. Total	Thru	Right	App. Total	Left	Thru	App. Total	Int. Total
04:00 PM	0	0	0	11	0	11	18	16	34	45
04:15 PM	0	0	0	15	0	15	25	22	47	62
04:30 PM	0	0	0	17	3	20	16	23	39	59
04:45 PM	0	0	0	15	1	16	19	26	45	61
Total	0	0	0	58	4	62	78	87	165	227
05:00 PM	0	0	0	20	1	21	17	22	39	60
05:15 PM	0	0	0	7	2	9	17	22	39	48
05:30 PM	0	0	0	7	3	10	25	21	46	56
05:45 PM	0	0	0	9	2	11	14	19	33	44
Total	0	0	0	43	8	51	73	84	157	208
Grand Total	0	0	0	101	12	113	151	171	322	435
Apprch %	0	0		89.4	10.6		46.9	53.1		
Total %	0	0	0	23.2	2.8	26	34.7	39.3	74	
Passenger Vehicles	0	0	0	98	12	110	92	165	257	367
% Passenger Vehicles	0	0	0	97	100	97.3	60.9	96.5	79.8	84.4
Large 2 Axle Vehicles	0	0	0	1	0	1	10	6	16	17
% Large 2 Axle Vehicles	0	0	0	1	0	0.9	6.6	3.5	5	3.9
3 Axle Vehicles	0	0	0	1	0	1	3	0	3	4
% 3 Axle Vehicles	0	0	0	1	0	0.9	2	0	0.9	0.9
4+ Axle Trucks	0	0	0	1	0	1	46	0	46	47
% 4+ Axle Trucks	0	0	0	1	0	0.9	30.5	0	14.3	10.8

	I-15 Northbound On Ramp Southbound			Joshua Street Westbound			Joshua Street Eastbound			
Start Time	Left	Right	App. Total	Thru	Right	App. Total	Left	Thru	App. Total	Int. Total
Peak Hour Analysis From 04:00 PM to 05:45 PM - Peak 1 of 1										
Peak Hour for Entire Intersection Begins at 04:15 PM										
04:15 PM	0	0	0	15	0	15	**25**	22	**47**	**62**
04:30 PM	0	0	0	17	**3**	20	16	23	39	59
04:45 PM	0	0	0	15	1	16	19	**26**	45	61
05:00 PM	0	0	0	**20**	1	**21**	17	22	39	60
Total Volume	0	0	0	67	5	72	77	93	170	242
% App. Total	0	0		93.1	6.9		45.3	54.7		
PHF	.000	.000	.000	.838	.417	.857	.770	.894	.904	.976

Counts Unlimited, Inc.
PO Box 1178
Corona, CA 92878
(951)268-6268

City of Victorville
N/S: I-15 Northbound On Ramp
E/W: Joshua Street
Weather: Clear

File Name : 08_VIC_15N_Joshua PM
Site Code : 05122132
Start Date : 2/16/2022
Page No : 2

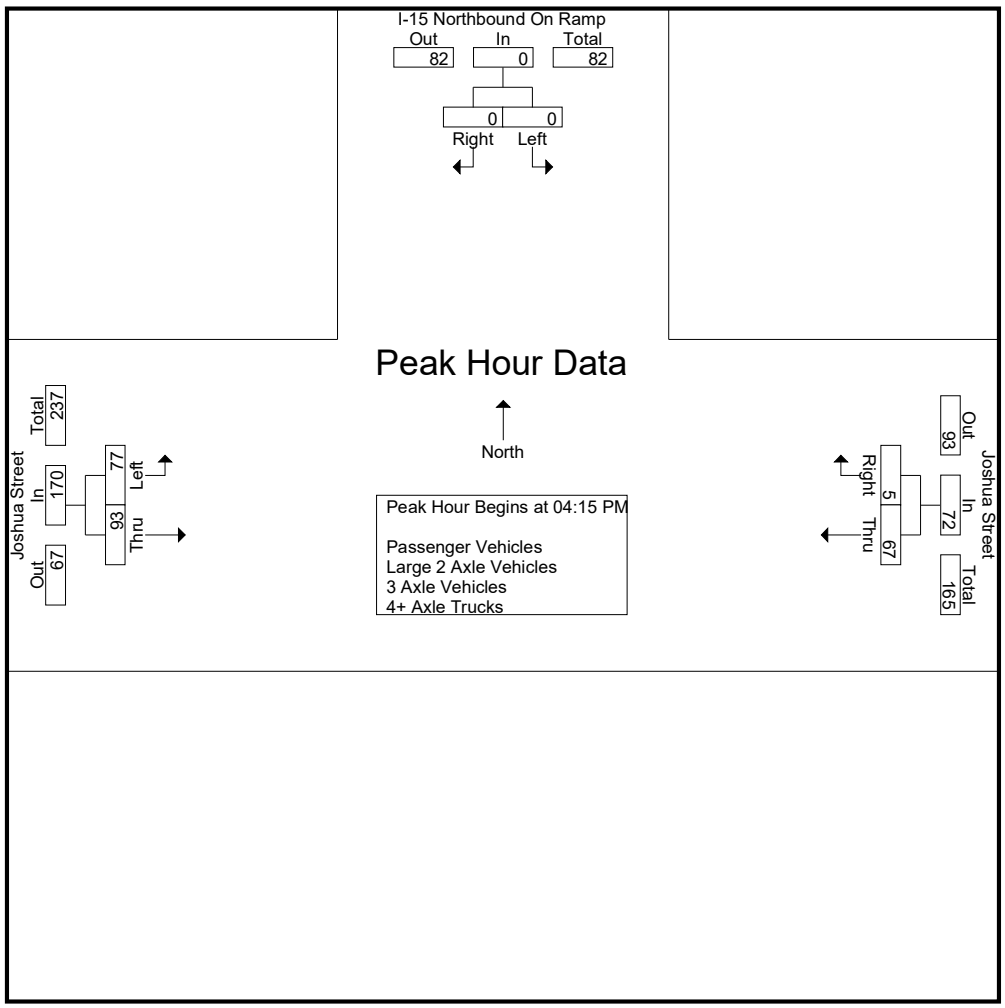

Peak Hour Analysis From 04:00 PM to 05:45 PM - Peak 1 of 1
Peak Hour for Each Approach Begins at:

	04:00 PM			04:15 PM			04:15 PM		
+0 mins.	0	0	0	15	0	15	**25**	22	**47**
+15 mins.	0	0	0	17	**3**	20	16	23	39
+30 mins.	0	0	0	15	1	16	19	**26**	45
+45 mins.	0	0	0	**20**	1	**21**	17	22	39
Total Volume	0	0	0	67	5	72	77	93	170
% App. Total	0	0		93.1	6.9		45.3	54.7	
PHF	.000	.000	.000	.838	.417	.857	.770	.894	.904

Counts Unlimited, Inc.
PO Box 1178
Corona, CA 92878
(951)268-6268

City of Victorville
N/S: I-15 Northbound On Ramp
E/W: Joshua Street
Weather: Clear

File Name : 08_VIC_15N_Joshua PM
Site Code : 05122132
Start Date : 2/16/2022
Page No : 1

Groups Printed- Passenger Vehicles

	I-15 Northbound On Ramp Southbound			Joshua Street Westbound			Joshua Street Eastbound			
Start Time	Left	Right	App. Total	Thru	Right	App. Total	Left	Thru	App. Total	Int. Total
04:00 PM	0	0	0	11	0	11	12	15	27	38
04:15 PM	0	0	0	15	0	15	15	22	37	52
04:30 PM	0	0	0	15	3	18	9	22	31	49
04:45 PM	0	0	0	15	1	16	12	24	36	52
Total	0	0	0	56	4	60	48	83	131	191
05:00 PM	0	0	0	20	1	21	11	21	32	53
05:15 PM	0	0	0	6	2	8	10	22	32	40
05:30 PM	0	0	0	7	3	10	19	21	40	50
05:45 PM	0	0	0	9	2	11	4	18	22	33
Total	0	0	0	42	8	50	44	82	126	176
Grand Total	0	0	0	98	12	110	92	165	257	367
Apprch %	0	0		89.1	10.9		35.8	64.2		
Total %	0	0	0	26.7	3.3	30	25.1	45	70	

	I-15 Northbound On Ramp Southbound			Joshua Street Westbound			Joshua Street Eastbound			
Start Time	Left	Right	App. Total	Thru	Right	App. Total	Left	Thru	App. Total	Int. Total
Peak Hour Analysis From 04:15 PM to 05:00 PM - Peak 1 of 1										
Peak Hour for Entire Intersection Begins at 04:15 PM										
04:15 PM	0	0	0	15	0	15	**15**	22	**37**	52
04:30 PM	0	0	0	15	**3**	18	9	22	31	49
04:45 PM	0	0	0	15	1	16	12	**24**	36	52
05:00 PM	0	0	0	**20**	1	**21**	11	21	32	**53**
Total Volume	0	0	0	65	5	70	47	89	136	206
% App. Total	0	0		92.9	7.1		34.6	65.4		
PHF	.000	.000	.000	.813	.417	.833	.783	.927	.919	.972

Counts Unlimited, Inc.
PO Box 1178
Corona, CA 92878
(951)268-6268

City of Victorville
N/S: I-15 Northbound On Ramp
E/W: Joshua Street
Weather: Clear

File Name : 08_VIC_15N_Joshua PM
Site Code : 05122132
Start Date : 2/16/2022
Page No : 2

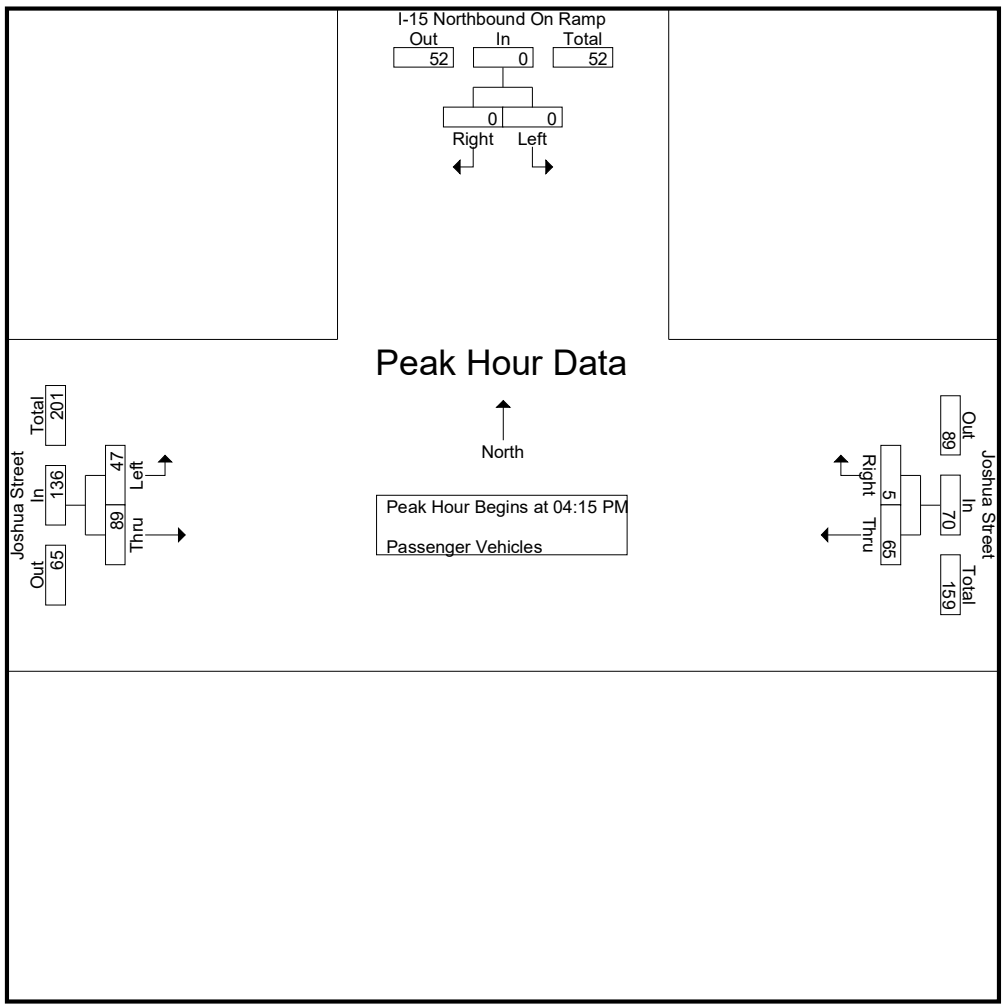

Peak Hour Analysis From 04:15 PM to 05:00 PM - Peak 1 of 1
Peak Hour for Each Approach Begins at:

	04:15 PM			04:15 PM			04:15 PM		
+0 mins.	0	0	0	15	0	15	**15**	22	**37**
+15 mins.	0	0	0	15	**3**	18	9	22	31
+30 mins.	0	0	0	15	1	16	12	**24**	36
+45 mins.	0	0	0	**20**	1	**21**	11	21	32
Total Volume	0	0	0	65	5	70	47	89	136
% App. Total	0	0		92.9	7.1		34.6	65.4	
PHF	.000	.000	.000	.813	.417	.833	.783	.927	.919

Counts Unlimited, Inc.
PO Box 1178
Corona, CA 92878
(951)268-6268

City of Victorville
N/S: I-15 Northbound On Ramp
E/W: Joshua Street
Weather: Clear

File Name : 08_VIC_15N_Joshua PM
Site Code : 05122132
Start Date : 2/16/2022
Page No : 1

Groups Printed- Large 2 Axle Vehicles

	I-15 Northbound On Ramp Southbound			Joshua Street Westbound			Joshua Street Eastbound			
Start Time	Left	Right	App. Total	Thru	Right	App. Total	Left	Thru	App. Total	Int. Total
04:00 PM	0	0	0	0	0	0	1	1	2	2
04:15 PM	0	0	0	0	0	0	1	0	1	1
04:30 PM	0	0	0	1	0	1	0	1	1	2
04:45 PM	0	0	0	0	0	0	2	2	4	4
Total	0	0	0	1	0	1	4	4	8	9
05:00 PM	0	0	0	0	0	0	2	1	3	3
05:15 PM	0	0	0	0	0	0	1	0	1	1
05:30 PM	0	0	0	0	0	0	0	0	0	0
05:45 PM	0	0	0	0	0	0	3	1	4	4
Total	0	0	0	0	0	0	6	2	8	8
Grand Total	0	0	0	1	0	1	10	6	16	17
Apprch %	0	0		100	0		62.5	37.5		
Total %	0	0	0	5.9	0	5.9	58.8	35.3	94.1	

	I-15 Northbound On Ramp Southbound			Joshua Street Westbound			Joshua Street Eastbound			
Start Time	Left	Right	App. Total	Thru	Right	App. Total	Left	Thru	App. Total	Int. Total
Peak Hour Analysis From 04:15 PM to 05:00 PM - Peak 1 of 1										
Peak Hour for Entire Intersection Begins at 04:15 PM										
04:15 PM	0	0	0	0	0	0	1	0	1	1
04:30 PM	0	0	0	**1**	0	**1**	0	1	1	2
04:45 PM	0	0	0	0	0	0	**2**	**2**	**4**	**4**
05:00 PM	0	0	0	0	0	0	2	1	3	3
Total Volume	0	0	0	1	0	1	5	4	9	10
% App. Total	0	0		100	0		55.6	44.4		
PHF	.000	.000	.000	.250	.000	.250	.625	.500	.563	.625

Counts Unlimited, Inc.
PO Box 1178
Corona, CA 92878
(951)268-6268

City of Victorville
N/S: I-15 Northbound On Ramp
E/W: Joshua Street
Weather: Clear

File Name : 08_VIC_15N_Joshua PM
Site Code : 05122132
Start Date : 2/16/2022
Page No : 2

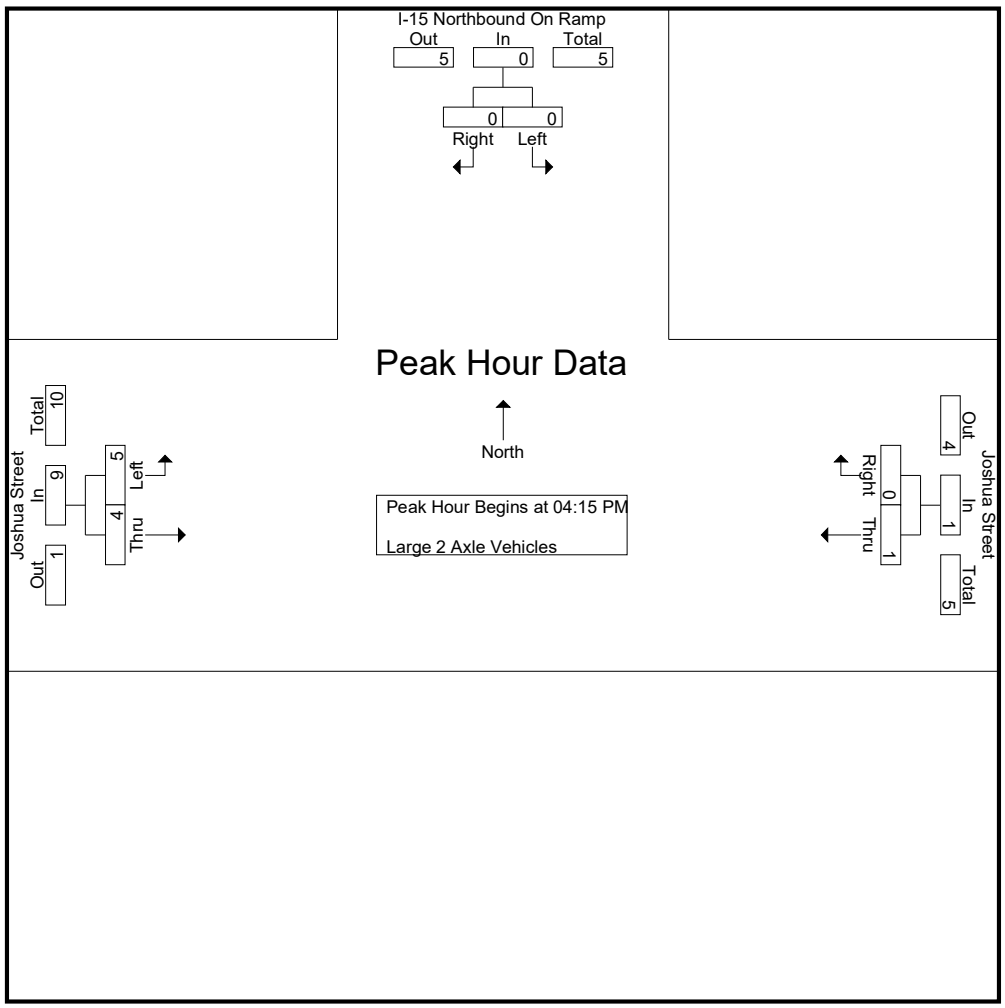

Peak Hour Analysis From 04:15 PM to 05:00 PM - Peak 1 of 1
Peak Hour for Each Approach Begins at:

	04:15 PM			04:15 PM			04:15 PM		
+0 mins.	0	0	0	0	0	0	1	0	1
+15 mins.	0	0	0	**1**	0	**1**	0	1	1
+30 mins.	0	0	0	0	0	0	**2**	**2**	**4**
+45 mins.	0	0	0	0	0	0	2	1	3
Total Volume	0	0	0	1	0	1	5	4	9
% App. Total	0	0		100	0		55.6	44.4	
PHF	.000	.000	.000	.250	.000	.250	.625	.500	.563

Counts Unlimited, Inc.
PO Box 1178
Corona, CA 92878
(951)268-6268

City of Victorville
N/S: I-15 Northbound On Ramp
E/W: Joshua Street
Weather: Clear

File Name : 08_VIC_15N_Joshua PM
Site Code : 05122132
Start Date : 2/16/2022
Page No : 1

Groups Printed- 3 Axle Vehicles

	I-15 Northbound On Ramp Southbound			Joshua Street Westbound			Joshua Street Eastbound			
Start Time	Left	Right	App. Total	Thru	Right	App. Total	Left	Thru	App. Total	Int. Total
04:00 PM	0	0	0	0	0	0	0	0	0	0
04:15 PM	0	0	0	0	0	0	1	0	1	1
04:30 PM	0	0	0	0	0	0	0	0	0	0
04:45 PM	0	0	0	0	0	0	0	0	0	0
Total	0	0	0	0	0	0	1	0	1	1
05:00 PM	0	0	0	0	0	0	1	0	1	1
05:15 PM	0	0	0	1	0	1	1	0	1	2
05:30 PM	0	0	0	0	0	0	0	0	0	0
05:45 PM	0	0	0	0	0	0	0	0	0	0
Total	0	0	0	1	0	1	2	0	2	3
Grand Total	0	0	0	1	0	1	3	0	3	4
Apprch %	0	0		100	0		100	0		
Total %	0	0	0	25	0	25	75	0	75	

	I-15 Northbound On Ramp Southbound			Joshua Street Westbound			Joshua Street Eastbound			
Start Time	Left	Right	App. Total	Thru	Right	App. Total	Left	Thru	App. Total	Int. Total
Peak Hour Analysis From 04:15 PM to 05:00 PM - Peak 1 of 1										
Peak Hour for Entire Intersection Begins at 04:15 PM										
04:15 PM	0	0	0	0	0	0	**1**	0	**1**	**1**
04:30 PM	0	0	0	0	0	0	0	0	0	0
04:45 PM	0	0	0	0	0	0	0	0	0	0
05:00 PM	0	0	0	0	0	0	1	0	1	1
Total Volume	0	0	0	0	0	0	2	0	2	2
% App. Total	0	0		0	0		100	0		
PHF	.000	.000	.000	.000	.000	.000	.500	.000	.500	.500

Counts Unlimited, Inc.
PO Box 1178
Corona, CA 92878
(951)268-6268

City of Victorville
N/S: I-15 Northbound On Ramp
E/W: Joshua Street
Weather: Clear

File Name : 08_VIC_15N_Joshua PM
Site Code : 05122132
Start Date : 2/16/2022
Page No : 2

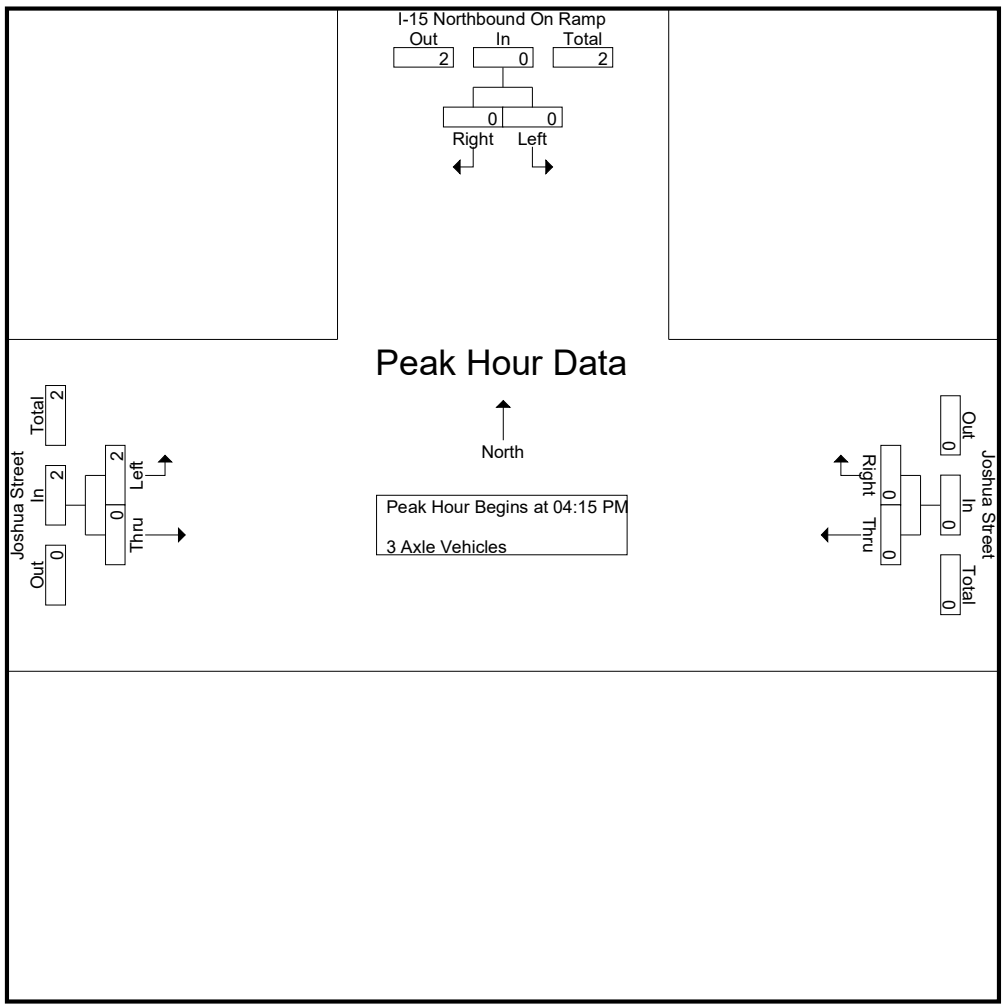

Peak Hour Analysis From 04:15 PM to 05:00 PM - Peak 1 of 1
Peak Hour for Each Approach Begins at:

	04:15 PM			04:15 PM			04:15 PM		
+0 mins.	0	0	0	0	0	0	**1**	0	**1**
+15 mins.	0	0	0	0	0	0	0	0	0
+30 mins.	0	0	0	0	0	0	0	0	0
+45 mins.	0	0	0	0	0	0	1	0	1
Total Volume	0	0	0	0	0	0	2	0	2
% App. Total	0	0		0	0		100	0	
PHF	.000	.000	.000	.000	.000	.000	.500	.000	.500

Counts Unlimited, Inc.
PO Box 1178
Corona, CA 92878
(951)268-6268

City of Victorville
N/S: I-15 Northbound On Ramp
E/W: Joshua Street
Weather: Clear

File Name : 08_VIC_15N_Joshua PM
Site Code : 05122132
Start Date : 2/16/2022

Groups Printed- 4+ Axle Trucks

	I-15 Northbound On Ramp Southbound			Joshua Street Westbound			Joshua Street Eastbound			
Start Time	Left	Right	App. Total	Thru	Right	App. Total	Left	Thru	App. Total	Int. Total
04:00 PM	0	0	0	0	0	0	5	0	5	5
04:15 PM	0	0	0	0	0	0	8	0	8	8
04:30 PM	0	0	0	1	0	1	7	0	7	8
04:45 PM	0	0	0	0	0	0	5	0	5	5
Total	0	0	0	1	0	1	25	0	25	26
05:00 PM	0	0	0	0	0	0	3	0	3	3
05:15 PM	0	0	0	0	0	0	5	0	5	5
05:30 PM	0	0	0	0	0	0	6	0	6	6
05:45 PM	0	0	0	0	0	0	7	0	7	7
Total	0	0	0	0	0	0	21	0	21	21
Grand Total	0	0	0	1	0	1	46	0	46	47
Apprch %	0	0		100	0		100	0		
Total %	0	0	0	2.1	0	2.1	97.9	0	97.9	

	I-15 Northbound On Ramp Southbound			Joshua Street Westbound			Joshua Street Eastbound			
Start Time	Left	Right	App. Total	Thru	Right	App. Total	Left	Thru	App. Total	Int. Total
Peak Hour Analysis From 04:15 PM to 05:00 PM - Peak 1 of 1										
Peak Hour for Entire Intersection Begins at 04:15 PM										
04:15 PM	0	0	0	0	0	0	**8**	0	**8**	**8**
04:30 PM	0	0	0	**1**	0	**1**	7	0	7	8
04:45 PM	0	0	0	0	0	0	5	0	5	5
05:00 PM	0	0	0	0	0	0	3	0	3	3
Total Volume	0	0	0	1	0	1	23	0	23	24
% App. Total	0	0		100	0		100	0		
PHF	.000	.000	.000	.250	.000	.250	.719	.000	.719	.750

Counts Unlimited, Inc.
PO Box 1178
Corona, CA 92878
(951)268-6268

City of Victorville
N/S: I-15 Northbound On Ramp
E/W: Joshua Street
Weather: Clear

File Name : 08_VIC_15N_Joshua PM
Site Code : 05122132
Start Date : 2/16/2022
Page No : 2

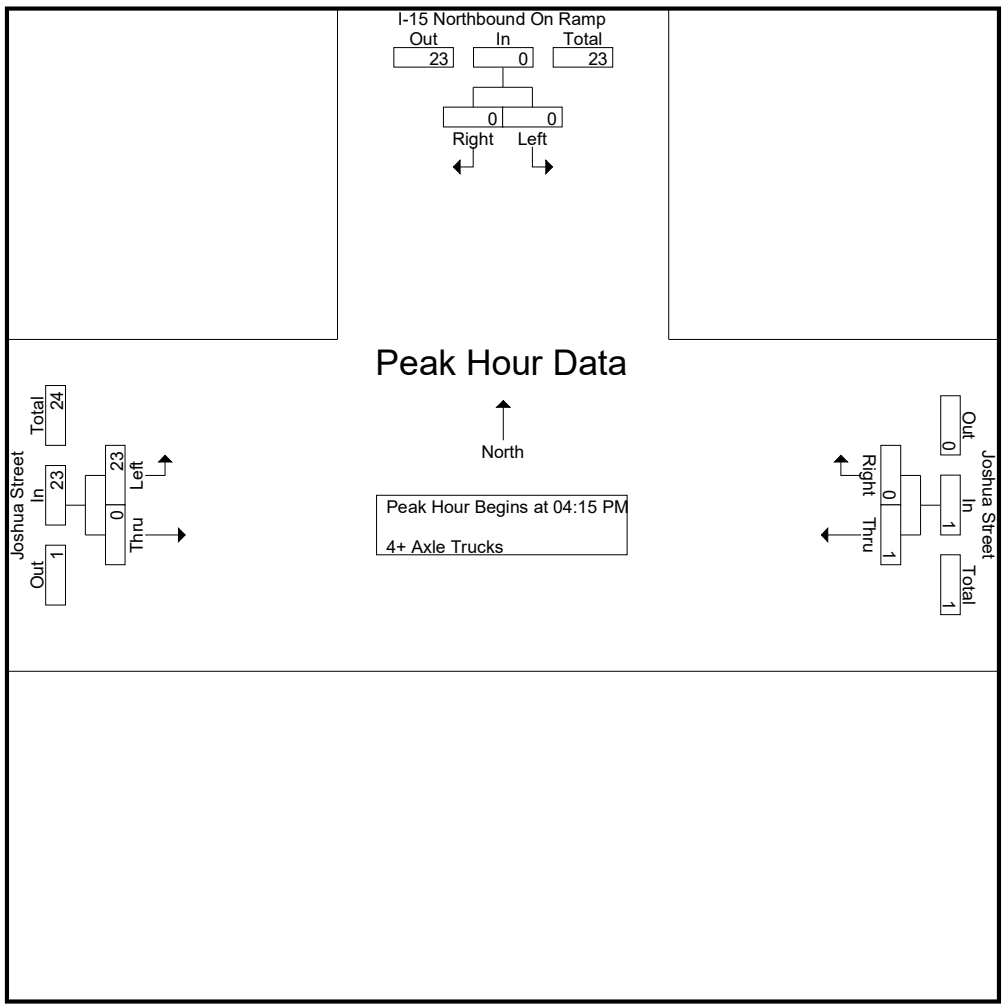

Peak Hour Analysis From 04:15 PM to 05:00 PM - Peak 1 of 1
Peak Hour for Each Approach Begins at:

	04:15 PM			04:15 PM			04:15 PM		
+0 mins.	0	0	0	0	0	0	**8**	0	**8**
+15 mins.	0	0	0	**1**	0	**1**	7	0	7
+30 mins.	0	0	0	0	0	0	5	0	5
+45 mins.	0	0	0	0	0	0	3	0	3
Total Volume	0	0	0	1	0	1	23	0	23
% App. Total	0	0		100	0		100	0	
PHF	.000	.000	.000	.250	.000	.250	.719	.000	.719

Location: Victorville
N/S: I-15 NB On Ramp
E/W: Joshua Street

Date: 4/12/2018
Day: Wednesday

PEDESTRIANS

	North Leg I-15 NB On Ramp	East Leg Joshua Street	South Leg Dead End	West Leg Joshua Street	
	Pedestrians	Pedestrians	Pedestrians	Pedestrians	
7:00 AM	0	0	0	0	0
7:15 AM	0	0	0	0	0
7:30 AM	0	0	0	0	0
7:45 AM	0	0	0	0	0
8:00 AM	0	0	0	0	0
8:15 AM	1	0	0	0	1
8:30 AM	0	0	0	0	0
8:45 AM	0	0	0	0	0
TOTAL VOLUMES:	1	0	0	0	1

	North Leg I-15 NB On Ramp	East Leg Joshua Street	South Leg Dead End	West Leg Joshua Street	
	Pedestrians	Pedestrians	Pedestrians	Pedestrians	
4:00 PM	0	0	0	0	0
4:15 PM	0	0	0	0	0
4:30 PM	0	0	0	0	0
4:45 PM	0	0	0	0	0
5:00 PM	0	0	0	0	0
5:15 PM	0	0	0	0	0
5:30 PM	0	0	0	0	0
5:45 PM	0	0	0	0	0
TOTAL VOLUMES:	0	0	0	0	0

Counts Unlimited, Inc.
PO Box 1178
Corona, CA 92878
951-268-6268

Location: Victorville
N/S: I-15 NB On Ramp
E/W: Joshua Street

Date: 4/12/2018
Day: Wednesday

BICYCLES

	Southbound I-15 NB On Ramp			Westbound Joshua Street			Northbound Dead End			Eastbound Joshua Street			
	Left	Thru	Right	Left	Thru	Right	Left	Thru	Right	Left	Thru	Right	
7:00 AM	0	0	0	0	0	0	0	0	0	0	0	0	0
7:15 AM	0	0	0	0	0	0	0	0	0	0	0	0	0
7:30 AM	0	0	0	0	0	0	0	0	0	0	0	0	0
7:45 AM	0	0	0	0	0	0	0	0	0	0	0	0	0
8:00 AM	0	0	0	0	0	0	0	0	0	0	0	0	0
8:15 AM	0	0	0	0	0	0	0	0	0	0	0	0	0
8:30 AM	0	0	0	0	0	0	0	0	0	0	0	0	0
8:45 AM	0	0	0	0	0	0	0	0	0	0	0	0	0
TOTAL VOLUMES:	0	0	0	0	0	0	0	0	0	0	0	0	0

	Southbound I-15 NB On Ramp			Westbound Joshua Street			Northbound Dead End			Eastbound Joshua Street			
	Left	Thru	Right	Left	Thru	Right	Left	Thru	Right	Left	Thru	Right	
4:00 PM	0	0	0	0	0	0	0	0	0	0	0	0	0
4:15 PM	0	0	0	0	0	0	0	0	0	0	0	0	0
4:30 PM	0	0	0	0	0	0	0	0	0	0	0	0	0
4:45 PM	0	0	0	0	0	0	0	0	0	0	0	0	0
5:00 PM	0	0	0	0	0	0	0	0	0	0	0	0	0
5:15 PM	0	0	0	0	0	0	0	0	0	0	0	0	0
5:30 PM	0	0	0	0	0	0	0	0	0	0	0	0	0
5:45 PM	0	0	0	0	0	0	0	0	0	0	0	0	0
TOTAL VOLUMES:	0	0	0	0	0	0	0	0	0	0	0	0	0

Counts Unlimited, Inc.
PO Box 1178
Corona, CA 92878
951-268-6268

Attachment C

Cumulative Projects and Cumulative Project Trip Generation

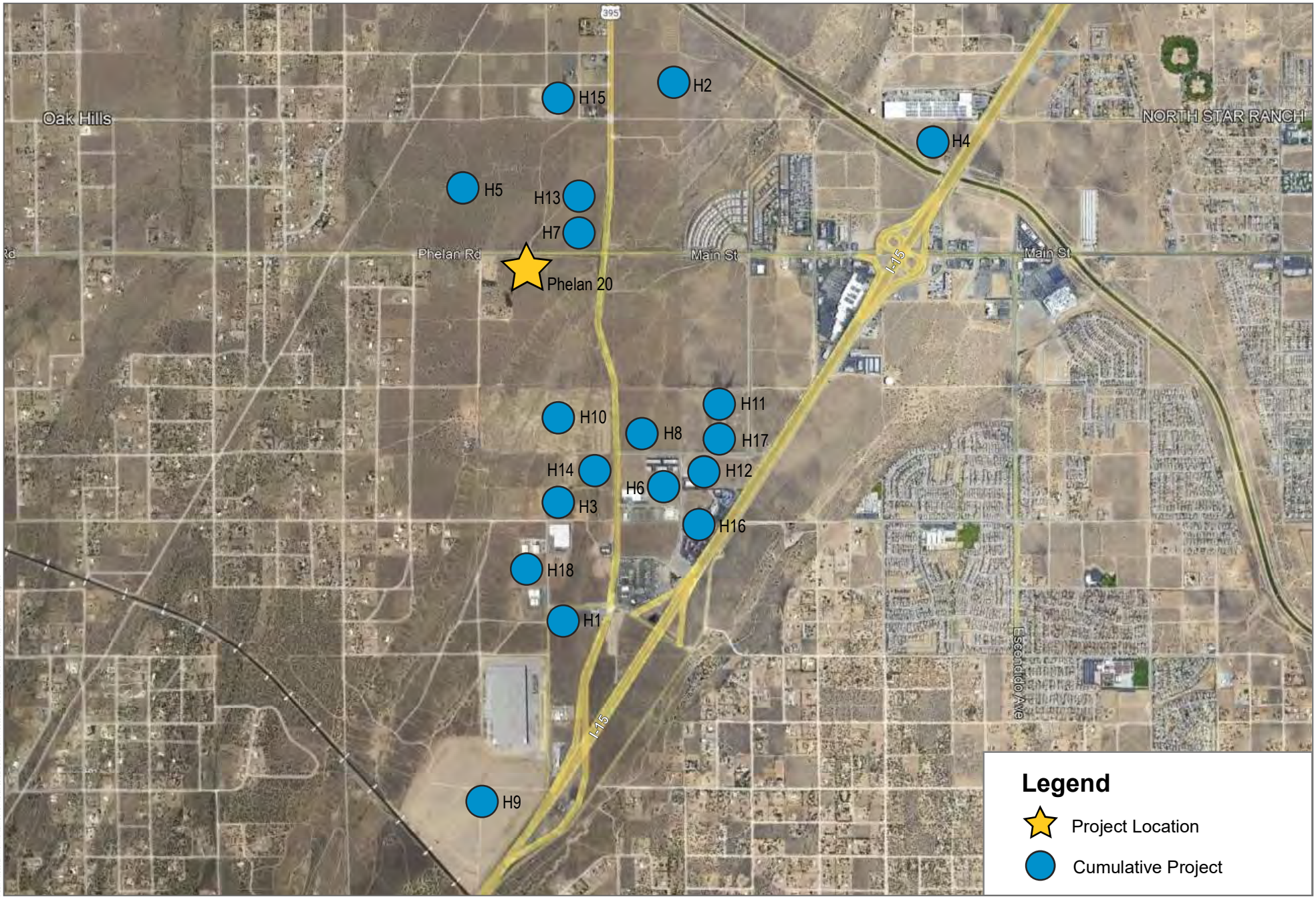

SOURCE: Google Maps 2024

DUDEK

N

Not to scale

ATTACHMENT B1

Cumulative Projects Locations

Phelan 20 Industrial Project

Cumulative Development Project Trip Generation Summary

ID	Land Use	ITE Code	Size/Unit		Daily	AM Peak Hour			PM Peak Hour		
						In	Out	Total	In	Out	Total
	Trip Rates [1]										
	General Light Industrial	110	TSF		4.87	0.65	0.09	0.74	0.09	0.56	0.65
	High-Cube Cold Storage Warehouse	157	TSF		2.12	0.06	0.06	0.11	0.06	0.06	0.12
	Convenience Market	851	TSF		762.28	31.27	31.27	62.54	25.05	24.06	49.11
	Food Cart Pod[2]	926	TSF		61.60	1.45	1.63	3.08	3.14	3.02	6.16
	Fast-Food Restaurant without Drive-Through Window	933	TSF		450.49	25.04	18.14	43.18	16.61	16.61	33.21
	Automobile Care Center[2]	942	TSF		31.10	1.49	0.77	2.25	1.49	1.62	3.11
	Gasoline/Service Station	944	VFP		172.01	5.14	5.14	10.28	6.96	6.96	13.91
	Automated Car Wash[2]	948	TSF		142.00	3.55	3.55	7.10	7.53	6.67	14.20
	Truck Stop	950	TSF		224.00	6.85	7.12	13.97	8.17	7.25	15.42
	High-Cube Fulfillment Center Warehouse[3]	N/A	TSF		2.13	0.09	0.03	0.12	0.05	0.12	0.17
ID	***Trip Generation***										
H1	CUP21-00006	942	13.813	TSF	**430**	**21**	**11**	**32**	**21**	**22**	**43**
H2	CUP21-00003	157	491.000	TSF	1,041	27	27	54	29	29	59
	Passenger Vehicles (55.3%/1.0 PCE)[5]				576	15	15	30	16	16	33
	2-Axle Trucks (15.5%/1.5 PCE)5				242	6	6	13	7	7	14
	3-Axle Trucks (4.9%/2.0 PCE)[5]				102	3	3	5	3	3	6
	4+-Axle Trucks (24.3%/3.0 PCE)[5]				759	20	20	39	21	21	43
	CUP21-00003 (PCE)				***1,678***	***44***	***44***	***88***	***48***	***48***	***96***
H3	CUP21-00001	942	12.800	TSF	**398**	**19**	**10**	**29**	**19**	**21**	**40**
H4	CUP20-00006	N/A	440.000	TSF	937	41	12	54	20	52	73
	Passenger Vehicles (82.2% Daily; 84.4% AM; 87.3% PM/1.0 PCE) [5]				770	35	10	45	18	46	63
	2-4-Axle Trucks (7.6% Daily; 6.6% AM; 6.7% PM/2.0 PCE)5				143	5	2	7	3	7	10
	5-Axle Trucks (10.2% Daily; 9.0% AM; 6.1% PM/3.0 PCE)5				286	105	31	136	4	10	13
	CUP2000006 (PCE)				***1,199***	***145***	***43***	***188***	***24***	***62***	***86***
H5[4]	CUP19-00010 / Hesperia Commerce Center II				11,898	1,076	182	1,258	222	1,039	1,261
	CUP19-00010 (PCE)				***15,152***	***1,357***	***230***	***1,587***	***274***	***1,296***	***1,570***
H6	CUP19-00006	950	4.000	VFP[1]	896	27	28	56	33	29	62
	Trucks (2.5 PCE)[7]				2,240	68	71	140	82	72	154
	CUP19-00006 (PCE)				***2,240***	***68***	***71***	***140***	***82***	***72***	***154***
H7	CUP18-00003	933	1.858	TSF	837	47	34	80	31	31	62
		944	9.000	VFP	1,548	46	46	93	63	63	125
		926	2.330	TSF	144	3	4	7	7	7	14
	Total (CUP18-00003)				***2,529***	***96***	***84***	***180***	***101***	***100***	***201***
H8	CUP21-00005 / I-15 Industrial Park Project	110	647.500	TSF	3,153	422	57	479	59	362	421
	Passenger Vehicles (78.6%/1.0 PCE)[8]				2,479	331	45	377	46	284	331
	2-Axle Trucks (8.0%/1.5 PCE)[8]				378	51	7	57	7	43	51
	3-Axle Trucks (3.9%/2.0 PCE)[8]				246	33	4	37	5	28	33
	4+-Axle Trucks (9.5%/3.0 PCE)[8]				899	120	16	137	17	103	120
		N/A	1202.500	TSF	2,560	113	34	147	56	143	198
	Passenger Vehicles (82.2% Daily; 84.4% AM; 87.3% PM/1.0 PCE) [6]				2,104	95	28	124	48	125	173
	2-4-Axle Trucks (7.6% Daily; 6.6% AM; 6.7% PM/2.0 PCE) [6]				390	7	2	10	4	10	13
	5-Axle Trucks (10.2% Daily; 9.0% AM; 6.1% PM/3.0 PCE) [6]				783	35	10	45	17	44	61
	Total I-15 Industrial Park Project				*5,713*	*535*	*91*	*626*	*114*	*505*	*619*
	Total Industrial Park (PCE)				***4,002***	***535***	***73***	***608***	***75***	***459***	***534***
H9	CUP11-10229	N/A	3500.0000	TSF	7,452	329	98	427	162	416	578
	Passenger Vehicles (82.2% Daily; 84.4% AM; 87.3% PM/1.0 PCE) [6]				6,125	270	81	351	133	342	475
	2-4-Axle Trucks (7.6% Daily; 6.6% AM; 6.7% PM/2.0 PCE) [6]				932	41	12	53	20	52	72
	5-Axle Trucks (10.2% Daily; 9.0% AM; 6.1% PM/3.0 PCE) [6]				285	13	4	16	6	16	22
	CUP11-10229 (PCE)				***7,342***	***324***	***97***	***421***	***159***	***410***	***569***
H10[9]	CUP22-00003	N/A	750.000	TSF	1,386	88	20	108	44	72	116
	Passenger Vehicles				1,172	82	12	94	39	68	107
	Trucks (PCE)				546	18	22	40	12	13	25
	CUP22-00003 (PCE)				***1,718***	***100***	***34***	***134***	***51***	***81***	***132***
H11	CUP22-00004	N/A	400.000	TSF	852	38	11	49	18	48	66
	Passenger Vehicles (82.2% Daily; 84.4% AM; 87.3% PM/1.0 PCE) [6]				700	32	9	41	16	41	58
	2-4-Axle Trucks (7.6% Daily; 6.6% AM; 6.7% PM/2.0 PCE) [6]				130	5	1	6	2	6	9
	5-Axle Trucks (10.2% Daily; 9.0% AM; 6.1% PM/3.0 PCE) [6]				260	10	3	13	3	9	12
	CUP22-00004 (PCE)				***4,526***	***247***	***82***	***329***	***124***	***218***	***342***
H12	CUP22-00016	110	74.924	TSF	365	49	7	55	7	42	49
	Passenger Vehicles (78.6%/1.0 PCE)[8]				287	38	5	44	5	33	38
	2-Axle Trucks (8.0%/1.5 PCE)[8]				44	6	1	7	1	5	6
	3-Axle Trucks (3.9%/2.0 PCE)[8]				28	4	1	4	1	3	4
	4+-Axle Trucks (9.5%/3.0 PCE)[8]				104	14	2	16	2	12	14
	CUP 22-00016 (PCE)				***463***	***62***	***8***	***70***	***9***	***53***	***62***
H13	CUP22-00017	N/A	655.468	TSF	1,395	62	18	80	30	78	108
	Passenger Vehicles (78.6%/1.0 PCE)[8]				1,097	48	14	63	24	61	85
	2-Axle Trucks (8.0%/1.5 PCE)[8]				167	7	2	10	4	9	13
	3-Axle Trucks (3.9%/2.0 PCE)[8]				109	5	1	6	2	6	8
	4+-Axle Trucks (9.5%/3.0 PCE)[8]				398	18	5	23	9	22	31
	CUP22-00017 (PCE)				***1,771***	***78***	***23***	***101***	***38***	***99***	***137***
H14	CUP23-00007	N/A	11.250	TSF	24	1	0	1	1	1	2
	Passenger Vehicles (78.6%/1.0 PCE)[8]				19	1	0	1	0	1	1
	2-Axle Trucks (8.0%/1.5 PCE)[8]				3	0	0	0	0	0	0
	3-Axle Trucks (3.9%/2.0 PCE)[8]				2	0	0	0	0	0	0
	4+-Axle Trucks (9.5%/3.0 PCE)[8]				7	0	0	0	0	0	1
	CUP23-00007 (PCE)				***9***	***0***	***0***	***0***	***0***	***0***	***1***
H15	CUP22-00008	N/A	469.979	TSF	1,001	44	13	57	22	56	78
	Passenger Vehicles (82.2% Daily; 84.4% AM; 87.3% PM/1.0 PCE) [6]				822	36	11	47	18	46	64
	2-4-Axle Trucks (7.6% Daily; 6.6% AM; 6.7% PM/2.0 PCE) [6]				152	7	2	9	3	8	12
	5-Axle Trucks (10.2% Daily; 9.0% AM; 6.1% PM/3.0 PCE) [6]				306	14	4	18	7	17	24
	CUP22-00004 (PCE)				***1,281***	***57***	***17***	***73***	***28***	***71***	***99***
H16	CUP22-00006	N/A	142.634	TSF	304	13	4	17	7	17	24
	Passenger Vehicles (82.2% Daily; 84.4% AM; 87.3% PM/1.0 PCE) [6]				250	11	3	14	5	14	19
	2-4-Axle Trucks (7.6% Daily; 6.6% AM; 6.7% PM/2.0 PCE) [6]				46	2	1	3	1	3	4
	5-Axle Trucks (10.2% Daily; 9.0% AM; 6.1% PM/3.0 PCE) [6]				93	4	1	5	2	5	7
	CUP22-00006 (PCE)				***389***	***17***	***5***	***22***	***8***	***22***	***30***
H17	Poplar 18	N/A	414.700	TSF	**1,634**	**153**	**26**	**179**	**33**	**144**	**177**
H18	CUP20-00007	942	12.765	TSF	397	19	10	29	19	21	40
	Total Cumulative Project Trip Generation				36,619	2,465	617	3,083	850	2,527	3,377
	Total Cumulative Project Trip Generation (PCE)				**44,298**	**3,130**	**811**	**3,943**	**1,021**	**2,993**	**4,014**

Notes: TSF = Thousand Square Feet; VFP = Vehicle Fueling Positions; SU = Storage Units; PCE = Passenger Car Equivalent

[1]Trip rates from the Institute of Transportation Engineers (ITE), *Trip Generation, 11th Edition, 2021,* unless otherwise noted.

[2]Trip rates from ITE 11th Edition unavailable for the both the daily and AM peak period for ITE 948 and 926, and the daily period for ITE 942; trip rates derived from the available PM peak period rate assuming the PM peak period represents 10% of daily trips and 200% of AM peak period

[3]Trip rates from the TUMF High Cube Warehouse Trip Generation Study, January 29, 2019; inbound/outbound splits from the ITE High Cube Warehouse Vehicle Trip Generation Anlaysis, October 2016.

[4]Trip rates from Appendix K-1, Traffic Impact Analyis of Hesperria Commerce Center II TIA (2020).

[5]Vehicle Mix and Percent from SCAQMD, Warehouse Truck Trip Study Data Results and Usage, July 2014.

[6]Vehicle Mix and Percent from the TUMF High Cube Warehouse Trip Generation Study, January 29, 2019.

[7]The proposed land use is a truck service center, including 2 truck washing stalls and 2 maintenance bays; the ITE trip generation rate Code 950 (Truck Stop) is assumed for the purposes of this analysis, where the vehicle fueling positions (VFP) independent variable is applied to the 4

[8]Vehicle Mix and Percent from the Fontana Truck Trip Generation Study, August, 2004.

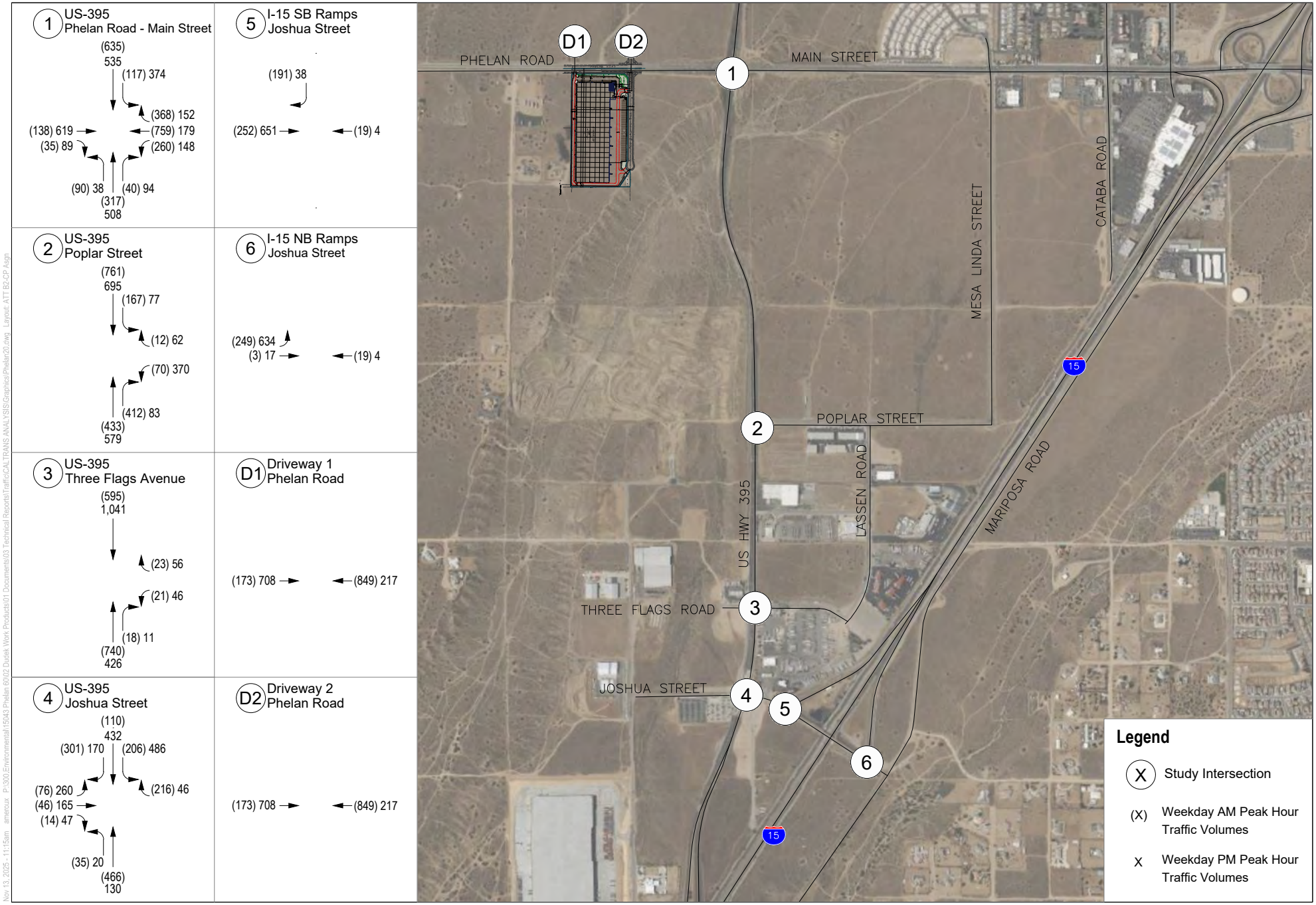

SOURCE: Bing Maps 2025; RGA 2023

DUDEK

NOT TO SCALE

ATTACHMENT B2

Cumulative Project Trip Assignment

Phelan 20 Industrial Project

Nov 13, 2025 - 11:15am amercur P:\300 Environmental\15043 Phelan 60\02 Dudek Work Products\01 Documents\03 Technical Reports\Traffic\CALTRANS ANALYSIS\Graphics\Phelan20.dwg Layout: ATT B2-CP Assn

Attachment D

Queuing Worksheets

1: US Hwy 395 & Phelan Road/Main Street Performance by movement

2: US Hwy 395 & Poplar Street Performance by movement

3: US Hwy 395 & Three Flags Road Performance by movement

4: US Hwy 395 & Joshua Street Performance by movement

5: Joshua Street & I-15 SB Off-Ramp Performance by movement

6: Joshua Street & I-15 NB On-Ramp Performance by movement

Total Zone Performance

Intersection: 1: US Hwy 395 & Phelan Road/Main Street

Movement	EB	EB	EB	WB	WB	WB	NB	NB	NB	B69	B69	SB
Directions Served	L	T	TR	L	T	TR	L	T	TR	T		L
Maximum Queue (ft)	76	209	256	54	190	209	304	408	402	86	51	265
Average Queue (ft)	29	127	151	12	95	96	86	230	216	8	5	261
95th Queue (ft)	64	192	227	38	153	169	193	362	359	42	30	298
Link Distance (ft)		862	862		2174	2174		513	513	430	430	
Upstream Blk Time (%)												
Queuing Penalty (veh)												
Storage Bay Dist (ft)	340			245			280					240
Storage Blk Time (%)								7				71
Queuing Penalty (veh)								7				326

Intersection: 1: US Hwy 395 & Phelan Road/Main Street

Movement	SB	SB	B47
Directions Served	T	TR	T
Maximum Queue (ft)	525	475	3632
Average Queue (ft)	507	445	1391
95th Queue (ft)	591	509	3310
Link Distance (ft)	455	455	5926
Upstream Blk Time (%)	35	8	
Queuing Penalty (veh)	0	0	
Storage Bay Dist (ft)			
Storage Blk Time (%)	35		
Queuing Penalty (veh)	80		

Intersection: 2: US Hwy 395 & Poplar Street

Movement	WB	WB	SB	B33	B33
Directions Served	L	R	L	T	
Maximum Queue (ft)	16	31	42	210	182
Average Queue (ft)	1	9	10	76	35
95th Queue (ft)	11	31	36	187	115
Link Distance (ft)	546	546		513	513
Upstream Blk Time (%)					
Queuing Penalty (veh)					
Storage Bay Dist (ft)			375		
Storage Blk Time (%)					
Queuing Penalty (veh)					

Intersection: 3: US Hwy 395 & Three Flags Road

Movement	EB	EB	WB	WB	WB	NB	NB	NB	NB	SB	SB	SB
Directions Served	L	TR	L	T	R	L	T	T	R	L	T	T
Maximum Queue (ft)	42	93	162	25	50	60	185	178	48	68	121	140
Average Queue (ft)	11	37	93	3	16	21	65	58	16	17	54	68
95th Queue (ft)	34	74	155	16	38	50	135	126	37	43	103	119
Link Distance (ft)	301	301		613	613		903	903	903			1966
Upstream Blk Time (%)												
Queuing Penalty (veh)												
Storage Bay Dist (ft)			245			190				225	225	
Storage Blk Time (%)							0					
Queuing Penalty (veh)							0					

Intersection: 3: US Hwy 395 & Three Flags Road

Movement	SB
Directions Served	R
Maximum Queue (ft)	36
Average Queue (ft)	13
95th Queue (ft)	29
Link Distance (ft)	
Upstream Blk Time (%)	
Queuing Penalty (veh)	
Storage Bay Dist (ft)	225
Storage Blk Time (%)	
Queuing Penalty (veh)	

Intersection: 4: US Hwy 395 & Joshua Street

Movement	EB	EB	WB	WB	WB	NB	NB	NB	NB	SB	SB	SB
Directions Served	L	TR	L	T	R	L	T	T	R	L	T	T
Maximum Queue (ft)	50	57	101	52	55	34	131	103	2	116	108	142
Average Queue (ft)	14	25	34	14	28	5	68	35	0	50	41	62
95th Queue (ft)	43	55	75	40	51	20	122	84	1	99	92	129
Link Distance (ft)		263	393	393	393		1732	1732			903	903
Upstream Blk Time (%)												
Queuing Penalty (veh)												
Storage Bay Dist (ft)	190					190			330	220		
Storage Blk Time (%)												
Queuing Penalty (veh)												

Intersection: 4: US Hwy 395 & Joshua Street

Movement	SB
Directions Served	R
Maximum Queue (ft)	6
Average Queue (ft)	1
95th Queue (ft)	4
Link Distance (ft)	
Upstream Blk Time (%)	
Queuing Penalty (veh)	
Storage Bay Dist (ft)	270
Storage Blk Time (%)	
Queuing Penalty (veh)	

Intersection: 5: Joshua Street & I-15 SB Off-Ramp

Movement	SB	SB
Directions Served	L	R
Maximum Queue (ft)	24	52
Average Queue (ft)	9	29
95th Queue (ft)	27	38
Link Distance (ft)		1440
Upstream Blk Time (%)		
Queuing Penalty (veh)		
Storage Bay Dist (ft)	25	
Storage Blk Time (%)	1	7
Queuing Penalty (veh)	2	1

Intersection: 6: Joshua Street & I-15 NB On-Ramp

Movement	EB
Directions Served	LT
Maximum Queue (ft)	42
Average Queue (ft)	5
95th Queue (ft)	25
Link Distance (ft)	919
Upstream Blk Time (%)	
Queuing Penalty (veh)	
Storage Bay Dist (ft)	
Storage Blk Time (%)	
Queuing Penalty (veh)	

Zone Summary

Zone wide Queuing Penalty: 416

1: US Hwy 395 & Phelan Road/Main Street Performance by movement

2: US Hwy 395 & Poplar Street Performance by movement

3: US Hwy 395 & Three Flags Road Performance by movement

4: US Hwy 395 & Joshua Street Performance by movement

5: Joshua Street & I-15 SB Off-Ramp Performance by movement

6: Joshua Street & I-15 NB On-Ramp Performance by movement

Total Zone Performance

Intersection: 1: US Hwy 395 & Phelan Road/Main Street

Movement	EB	EB	EB	WB	WB	WB	NB	NB	NB	B33	B69	B69
Directions Served	L	T	TR	L	T	TR	L	T	TR	T	T	
Maximum Queue (ft)	109	315	313	172	421	413	305	584	544	2966	474	474
Average Queue (ft)	37	158	176	20	253	249	294	582	514	2451	295	271
95th Queue (ft)	85	245	261	100	368	374	372	600	526	3971	612	604
Link Distance (ft)		862	862		2174	2174		513	513	2895	430	430
Upstream Blk Time (%)								50	10	62	20	13
Queuing Penalty (veh)								299	58	734	120	74
Storage Bay Dist (ft)	340			245			280					
Storage Blk Time (%)		0			12		1	83				
Queuing Penalty (veh)		0			2		3	147				

Intersection: 1: US Hwy 395 & Phelan Road/Main Street

Movement	SB	SB	SB	B47
Directions Served	L	T	TR	T
Maximum Queue (ft)	265	478	430	211
Average Queue (ft)	221	298	277	24
95th Queue (ft)	317	482	443	171
Link Distance (ft)		455	455	5926
Upstream Blk Time (%)		3	1	
Queuing Penalty (veh)		0	0	
Storage Bay Dist (ft)	240			
Storage Blk Time (%)	11	17		
Queuing Penalty (veh)	47	46		

Intersection: 2: US Hwy 395 & Poplar Street

Movement	WB	WB	NB	NB	SB	SB	B33	B33
Directions Served	L	R	T	TR	L	T	T	
Maximum Queue (ft)	60	57	1741	1751	57	5	218	136
Average Queue (ft)	16	22	573	564	16	0	70	23
95th Queue (ft)	48	52	1573	1566	44	3	170	84
Link Distance (ft)	546	546	1966	1966		430	513	513
Upstream Blk Time (%)			0	0				
Queuing Penalty (veh)			0	0				
Storage Bay Dist (ft)					375			
Storage Blk Time (%)								
Queuing Penalty (veh)								

Intersection: 3: US Hwy 395 & Three Flags Road

Movement	EB	EB	WB	WB	WB	NB	NB	NB	NB	SB	SB	SB
Directions Served	L	TR	L	T	R	L	T	T	R	L	T	T
Maximum Queue (ft)	77	77	114	38	59	109	218	232	120	76	121	129
Average Queue (ft)	29	29	61	8	23	35	85	88	23	24	44	63
95th Queue (ft)	62	59	105	29	50	78	177	181	69	57	90	114
Link Distance (ft)	301	301		613	613		903	903	903			1966
Upstream Blk Time (%)												
Queuing Penalty (veh)												
Storage Bay Dist (ft)			245			190				225	225	
Storage Blk Time (%)							0					
Queuing Penalty (veh)							0					

Intersection: 3: US Hwy 395 & Three Flags Road

Movement	SB
Directions Served	R
Maximum Queue (ft)	44
Average Queue (ft)	13
95th Queue (ft)	32
Link Distance (ft)	
Upstream Blk Time (%)	
Queuing Penalty (veh)	
Storage Bay Dist (ft)	225
Storage Blk Time (%)	
Queuing Penalty (veh)	

Intersection: 4: US Hwy 395 & Joshua Street

Movement	EB	EB	WB	WB	WB	NB	NB	NB	NB	SB	SB	SB
Directions Served	L	TR	L	T	R	L	T	T	R	L	T	T
Maximum Queue (ft)	89	103	108	55	73	61	230	188	24	147	134	165
Average Queue (ft)	38	41	47	16	33	10	116	82	2	52	46	69
95th Queue (ft)	73	83	93	42	59	32	198	161	13	107	105	140
Link Distance (ft)		263	393	393	393		1732	1732			903	903
Upstream Blk Time (%)												
Queuing Penalty (veh)												
Storage Bay Dist (ft)	190					190			330	220		
Storage Blk Time (%)							1					
Queuing Penalty (veh)							0					

Intersection: 4: US Hwy 395 & Joshua Street

Movement	SB
Directions Served	R
Maximum Queue (ft)	14
Average Queue (ft)	1
95th Queue (ft)	7
Link Distance (ft)	
Upstream Blk Time (%)	
Queuing Penalty (veh)	
Storage Bay Dist (ft)	270
Storage Blk Time (%)	
Queuing Penalty (veh)	

Intersection: 5: Joshua Street & I-15 SB Off-Ramp

Movement	SB	SB
Directions Served	L	R
Maximum Queue (ft)	30	58
Average Queue (ft)	13	33
95th Queue (ft)	32	49
Link Distance (ft)		1440
Upstream Blk Time (%)		
Queuing Penalty (veh)		
Storage Bay Dist (ft)	25	
Storage Blk Time (%)	2	11
Queuing Penalty (veh)	5	3

Intersection: 6: Joshua Street & I-15 NB On-Ramp

Movement	EB
Directions Served	LT
Maximum Queue (ft)	62
Average Queue (ft)	12
95th Queue (ft)	44
Link Distance (ft)	919
Upstream Blk Time (%)	
Queuing Penalty (veh)	
Storage Bay Dist (ft)	
Storage Blk Time (%)	
Queuing Penalty (veh)	

Zone Summary

Zone wide Queuing Penalty: 1537

1: US Hwy 395 & Phelan Road/Main Street Performance by movement

2: US Hwy 395 & Poplar Street Performance by movement

3: US Hwy 395 & Three Flags Road Performance by movement

4: US Hwy 395 & Joshua Street Performance by movement

5: Joshua Street & I-15 SB Off-Ramp Performance by movement

6: Joshua Street & I-15 NB On-Ramp Performance by movement

Total Zone Performance

Intersection: 1: US Hwy 395 & Phelan Road/Main Street

Movement	EB	EB	EB	WB	WB	WB	NB	NB	NB	B33	B69	B69
Directions Served	L	T	TR	L	T	TR	L	T	TR	T	T	
Maximum Queue (ft)	107	214	242	44	185	177	305	584	513	2966	460	477
Average Queue (ft)	34	128	148	8	98	90	303	546	470	2052	236	218
95th Queue (ft)	76	194	223	30	158	152	319	695	651	4063	585	566
Link Distance (ft)		862	862		2174	2174		513	513	2895	430	430
Upstream Blk Time (%)								59	7	53	26	13
Queuing Penalty (veh)								252	30	450	109	55
Storage Bay Dist (ft)	340			245			280					
Storage Blk Time (%)							95	1				
Queuing Penalty (veh)							318	2				

Intersection: 1: US Hwy 395 & Phelan Road/Main Street

Movement	SB	SB	SB	B47
Directions Served	L	T	TR	T
Maximum Queue (ft)	265	525	480	3449
Average Queue (ft)	260	504	442	1855
95th Queue (ft)	296	610	526	3872
Link Distance (ft)		455	455	5926
Upstream Blk Time (%)		33	9	
Queuing Penalty (veh)		0	0	
Storage Bay Dist (ft)	240			
Storage Blk Time (%)	70	31		
Queuing Penalty (veh)	324	70		

Intersection: 2: US Hwy 395 & Poplar Street

Movement	WB	WB	NB	NB	SB	SB	B33	B33
Directions Served	L	R	T	TR	L	T	T	
Maximum Queue (ft)	19	35	1469	1462	57	22	198	142
Average Queue (ft)	2	10	396	389	12	1	63	23
95th Queue (ft)	13	32	1309	1296	43	11	157	86
Link Distance (ft)	546	546	1966	1966		430	513	513
Upstream Blk Time (%)			2	1				
Queuing Penalty (veh)			8	6				
Storage Bay Dist (ft)					375			
Storage Blk Time (%)								
Queuing Penalty (veh)								

Intersection: 3: US Hwy 395 & Three Flags Road

Movement	EB	EB	WB	WB	WB	NB	NB	NB	NB	SB	SB	SB
Directions Served	L	TR	L	T	R	L	T	T	R	L	T	T
Maximum Queue (ft)	48	93	182	25	50	94	323	322	220	51	117	135
Average Queue (ft)	15	35	88	3	17	23	77	80	24	19	50	68
95th Queue (ft)	41	68	155	15	43	65	240	238	121	44	98	117
Link Distance (ft)	301	301		613	613		903	903	903			1966
Upstream Blk Time (%)							0	0				
Queuing Penalty (veh)							0	0				
Storage Bay Dist (ft)			245			190				225	225	
Storage Blk Time (%)			0				2					
Queuing Penalty (veh)			0				1					

Intersection: 3: US Hwy 395 & Three Flags Road

Movement	SB
Directions Served	R
Maximum Queue (ft)	36
Average Queue (ft)	11
95th Queue (ft)	30
Link Distance (ft)	
Upstream Blk Time (%)	
Queuing Penalty (veh)	
Storage Bay Dist (ft)	225
Storage Blk Time (%)	
Queuing Penalty (veh)	

Intersection: 4: US Hwy 395 & Joshua Street

Movement	EB	EB	WB	WB	WB	NB	NB	NB	NB	SB	SB	SB
Directions Served	L	TR	L	T	R	L	T	T	R	L	T	T
Maximum Queue (ft)	58	69	89	50	63	26	184	139	15	129	129	150
Average Queue (ft)	15	23	39	14	34	4	78	42	1	57	40	59
95th Queue (ft)	42	57	79	38	52	16	141	99	10	106	93	123
Link Distance (ft)		263	393	393	393		1732	1732			903	903
Upstream Blk Time (%)												
Queuing Penalty (veh)												
Storage Bay Dist (ft)	190					190			330	220		
Storage Blk Time (%)							0				0	
Queuing Penalty (veh)							0				0	

Intersection: 4: US Hwy 395 & Joshua Street

Movement	SB
Directions Served	R
Maximum Queue (ft)	14
Average Queue (ft)	1
95th Queue (ft)	8
Link Distance (ft)	
Upstream Blk Time (%)	
Queuing Penalty (veh)	
Storage Bay Dist (ft)	270
Storage Blk Time (%)	
Queuing Penalty (veh)	

Intersection: 5: Joshua Street & I-15 SB Off-Ramp

Movement	SB	SB
Directions Served	L	R
Maximum Queue (ft)	24	53
Average Queue (ft)	9	31
95th Queue (ft)	27	44
Link Distance (ft)		1440
Upstream Blk Time (%)		
Queuing Penalty (veh)		
Storage Bay Dist (ft)	25	
Storage Blk Time (%)	1	9
Queuing Penalty (veh)	2	2

Intersection: 6: Joshua Street & I-15 NB On-Ramp

Movement	EB
Directions Served	LT
Maximum Queue (ft)	40
Average Queue (ft)	6
95th Queue (ft)	27
Link Distance (ft)	919
Upstream Blk Time (%)	
Queuing Penalty (veh)	
Storage Bay Dist (ft)	
Storage Blk Time (%)	
Queuing Penalty (veh)	

Zone Summary

Zone wide Queuing Penalty: 1629

1: US Hwy 395 & Phelan Road/Main Street Performance by movement

2: US Hwy 395 & Poplar Street Performance by movement

3: US Hwy 395 & Three Flags Road Performance by movement

4: US Hwy 395 & Joshua Street Performance by movement

5: Joshua Street & I-15 SB Off-Ramp Performance by movement

6: Joshua Street & I-15 NB On-Ramp Performance by movement

Total Zone Performance

Intersection: 1: US Hwy 395 & Phelan Road/Main Street

Movement	EB	EB	EB	WB	WB	WB	NB	NB	NB	B33	B69	B69
Directions Served	L	T	TR	L	T	TR	L	T	TR	T	T	
Maximum Queue (ft)	150	312	343	180	524	503	305	584	536	2966	466	482
Average Queue (ft)	63	179	202	17	290	279	288	583	513	2530	315	294
95th Queue (ft)	126	274	301	82	459	449	384	609	531	3858	620	619
Link Distance (ft)		862	862		2174	2174		513	513	2895	430	430
Upstream Blk Time (%)								49	11	66	22	13
Queuing Penalty (veh)								302	66	796	135	77
Storage Bay Dist (ft)	340			245			280					
Storage Blk Time (%)		0			21		0	82				
Queuing Penalty (veh)		0			3		2	167				

Intersection: 1: US Hwy 395 & Phelan Road/Main Street

Movement	SB	SB	SB	B47
Directions Served	L	T	TR	T
Maximum Queue (ft)	265	517	469	538
Average Queue (ft)	236	372	337	163
95th Queue (ft)	319	561	515	829
Link Distance (ft)		455	455	5926
Upstream Blk Time (%)		7	1	
Queuing Penalty (veh)		0	0	
Storage Bay Dist (ft)	240			
Storage Blk Time (%)	23	24		
Queuing Penalty (veh)	96	63		

Intersection: 2: US Hwy 395 & Poplar Street

Movement	WB	WB	NB	NB	SB	SB	B33	B33
Directions Served	L	R	T	TR	L	T	T	
Maximum Queue (ft)	65	57	1982	1977	58	7	259	186
Average Queue (ft)	12	22	787	781	13	0	83	33
95th Queue (ft)	43	49	2055	2057	42	5	207	113
Link Distance (ft)	546	546	1966	1966		430	513	513
Upstream Blk Time (%)			4	3				
Queuing Penalty (veh)			22	19				
Storage Bay Dist (ft)					375			
Storage Blk Time (%)								
Queuing Penalty (veh)								

Intersection: 3: US Hwy 395 & Three Flags Road

Movement	EB	EB	WB	WB	WB	NB	NB	NB	NB	SB	SB	SB
Directions Served	L	TR	L	T	R	L	T	T	R	L	T	T
Maximum Queue (ft)	95	86	162	25	72	190	487	475	356	74	131	142
Average Queue (ft)	32	29	68	6	25	43	119	123	39	28	53	71
95th Queue (ft)	71	62	124	24	55	119	336	338	212	61	107	126
Link Distance (ft)	301	301		613	613		903	903	903			1966
Upstream Blk Time (%)							0	0				
Queuing Penalty (veh)							0	0				
Storage Bay Dist (ft)			245			190				225	225	
Storage Blk Time (%)							7					
Queuing Penalty (veh)							3					

Intersection: 3: US Hwy 395 & Three Flags Road

Movement	SB
Directions Served	R
Maximum Queue (ft)	32
Average Queue (ft)	11
95th Queue (ft)	28
Link Distance (ft)	
Upstream Blk Time (%)	
Queuing Penalty (veh)	
Storage Bay Dist (ft)	225
Storage Blk Time (%)	
Queuing Penalty (veh)	

Intersection: 4: US Hwy 395 & Joshua Street

Movement	EB	EB	WB	WB	WB	NB	NB	NB	NB	SB	SB	SB
Directions Served	L	TR	L	T	R	L	T	T	R	L	T	T
Maximum Queue (ft)	103	91	127	63	90	84	278	237	56	164	176	186
Average Queue (ft)	41	40	46	21	38	11	134	92	5	80	48	70
95th Queue (ft)	85	76	95	50	70	47	230	179	26	142	121	148
Link Distance (ft)		263	393	393	393		1732	1732			903	903
Upstream Blk Time (%)												
Queuing Penalty (veh)												
Storage Bay Dist (ft)	190					190			330	220		
Storage Blk Time (%)							2	0		0		
Queuing Penalty (veh)							0	0		0		

Intersection: 4: US Hwy 395 & Joshua Street

Movement	SB
Directions Served	R
Maximum Queue (ft)	10
Average Queue (ft)	1
95th Queue (ft)	5
Link Distance (ft)	
Upstream Blk Time (%)	
Queuing Penalty (veh)	
Storage Bay Dist (ft)	270
Storage Blk Time (%)	
Queuing Penalty (veh)	

Intersection: 5: Joshua Street & I-15 SB Off-Ramp

Movement	SB	SB
Directions Served	L	R
Maximum Queue (ft)	34	65
Average Queue (ft)	15	32
95th Queue (ft)	34	48
Link Distance (ft)		1440
Upstream Blk Time (%)		
Queuing Penalty (veh)		
Storage Bay Dist (ft)	25	
Storage Blk Time (%)	3	11
Queuing Penalty (veh)	6	3

Intersection: 6: Joshua Street & I-15 NB On-Ramp

Movement	EB
Directions Served	LT
Maximum Queue (ft)	54
Average Queue (ft)	13
95th Queue (ft)	43
Link Distance (ft)	919
Upstream Blk Time (%)	
Queuing Penalty (veh)	
Storage Bay Dist (ft)	
Storage Blk Time (%)	
Queuing Penalty (veh)	

Zone Summary

Zone wide Queuing Penalty: 1762

1: US Hwy 395 & Phelan Road/Main Street Performance by movement

2: US Hwy 395 & Poplar Street Performance by movement

3: US Hwy 395 & Three Flags Road Performance by movement

4: US Hwy 395 & Joshua Street Performance by movement

5: Joshua Street & I-15 SB Off-Ramp Performance by movement

6: Joshua Street & I-15 NB On-Ramp Performance by movement

Total Zone Performance

Intersection: 1: US Hwy 395 & Phelan Road/Main Street

Movement	EB	EB	EB	WB	WB	WB	B71	B71	B71	NB	NB	NB
Directions Served	L	T	TR	L	T	TR	T	T		L	T	TR
Maximum Queue (ft)	249	456	454	270	2245	2246	619	619	619	305	584	554
Average Queue (ft)	50	272	299	269	2200	2196	541	541	516	298	583	514
95th Queue (ft)	173	420	439	281	2487	2489	861	858	891	357	606	533
Link Distance (ft)		862	862		2174	2174	604	604	604		513	513
Upstream Blk Time (%)					88	83	79	78	72		58	12
Queuing Penalty (veh)					0	0	0	0	0		368	75
Storage Bay Dist (ft)	340			245						280		
Storage Blk Time (%)		4		96	5					68	46	
Queuing Penalty (veh)		1		527	14					353	89	

Intersection: 1: US Hwy 395 & Phelan Road/Main Street

Movement	B33	B69	B69	SB	SB	SB	B47
Directions Served	T	T		L	T	TR	T
Maximum Queue (ft)	2966	462	472	265	525	465	5941
Average Queue (ft)	2612	346	304	263	525	455	5584
95th Queue (ft)	3904	638	606	292	526	460	7163
Link Distance (ft)	2895	430	430		455	455	5926
Upstream Blk Time (%)	75	25	9		40	9	71
Queuing Penalty (veh)	939	159	55		0	0	0
Storage Bay Dist (ft)				240			
Storage Blk Time (%)				61	45		
Queuing Penalty (veh)				495	163		

Intersection: 2: US Hwy 395 & Poplar Street

Movement	WB	WB	B14	B14	NB	NB	SB	SB	B69	B33	B33
Directions Served	L	R	T	T	T	TR	L	T	T	T	
Maximum Queue (ft)	618	618	428	412	1983	1985	345	335	1438	306	265
Average Queue (ft)	542	360	170	145	1242	1238	135	57	165	104	50
95th Queue (ft)	762	828	403	375	2577	2585	325	299	1134	256	181
Link Distance (ft)	546	546	524	524	1966	1966		430	2895	513	513
Upstream Blk Time (%)	75	51	0	0	11	11		5	1	0	0
Queuing Penalty (veh)	0	0	0	0	86	85		104	19	1	1
Storage Bay Dist (ft)							375				
Storage Blk Time (%)							2	5			
Queuing Penalty (veh)							41	10			

Intersection: 3: US Hwy 395 & Three Flags Road

Movement	EB	EB	WB	WB	WB	NB	NB	NB	NB	SB	SB	SB
Directions Served	L	TR	L	T	R	L	T	T	R	L	T	T
Maximum Queue (ft)	61	90	229	92	75	214	922	942	957	46	151	162
Average Queue (ft)	16	40	120	5	28	47	427	445	353	12	62	83
95th Queue (ft)	45	75	193	52	65	164	1010	1012	1012	35	122	148
Link Distance (ft)	301	301		613	613		903	903	903			1966
Upstream Blk Time (%)							10	15	13			
Queuing Penalty (veh)							52	79	68			
Storage Bay Dist (ft)			245			190				225	225	
Storage Blk Time (%)			1				37					0
Queuing Penalty (veh)			0				11					0

Intersection: 3: US Hwy 395 & Three Flags Road

Movement	SB
Directions Served	R
Maximum Queue (ft)	27
Average Queue (ft)	8
95th Queue (ft)	23
Link Distance (ft)	
Upstream Blk Time (%)	
Queuing Penalty (veh)	
Storage Bay Dist (ft)	225
Storage Blk Time (%)	
Queuing Penalty (veh)	

Intersection: 4: US Hwy 395 & Joshua Street

Movement	EB	EB	WB	WB	WB	NB	NB	NB	NB	SB	SB	SB
Directions Served	L	TR	L	T	R	L	T	T	R	L	T	T
Maximum Queue (ft)	174	146	114	131	282	214	1557	1544	355	242	327	310
Average Queue (ft)	76	59	52	20	96	45	537	492	40	135	95	104
95th Queue (ft)	144	111	98	80	238	150	1430	1392	219	233	227	212
Link Distance (ft)		263	393	393	393		1732	1732			903	903
Upstream Blk Time (%)					2		9	9				
Queuing Penalty (veh)					3		0	0				
Storage Bay Dist (ft)	190					190			330	220		
Storage Blk Time (%)	0						35	26	0	3	0	0
Queuing Penalty (veh)	0						15	9	0	17	1	0

Intersection: 4: US Hwy 395 & Joshua Street

Movement	SB
Directions Served	R
Maximum Queue (ft)	51
Average Queue (ft)	14
95th Queue (ft)	40
Link Distance (ft)	
Upstream Blk Time (%)	
Queuing Penalty (veh)	
Storage Bay Dist (ft)	270
Storage Blk Time (%)	
Queuing Penalty (veh)	

Intersection: 5: Joshua Street & I-15 SB Off-Ramp

Movement	WB	SB	SB
Directions Served	T	L	R
Maximum Queue (ft)	6	44	145
Average Queue (ft)	0	11	52
95th Queue (ft)	4	34	125
Link Distance (ft)	919		1440
Upstream Blk Time (%)			
Queuing Penalty (veh)			
Storage Bay Dist (ft)		25	
Storage Blk Time (%)		2	25
Queuing Penalty (veh)		8	5

Intersection: 6: Joshua Street & I-15 NB On-Ramp

Movement	EB
Directions Served	LT
Maximum Queue (ft)	92
Average Queue (ft)	20
95th Queue (ft)	66
Link Distance (ft)	919
Upstream Blk Time (%)	
Queuing Penalty (veh)	
Storage Bay Dist (ft)	
Storage Blk Time (%)	
Queuing Penalty (veh)	

Zone Summary

Zone wide Queuing Penalty: 3854

1: US Hwy 395 & Phelan Road/Main Street Performance by movement

2: US Hwy 395 & Poplar Street Performance by movement

3: US Hwy 395 & Three Flags Road Performance by movement

4: US Hwy 395 & Joshua Street Performance by movement

5: Joshua Street & I-15 SB Off-Ramp Performance by movement

6: Joshua Street & I-15 NB On-Ramp Performance by movement

Total Zone Performance

Intersection: 1: US Hwy 395 & Phelan Road/Main Street

Movement	EB	EB	EB	WB	WB	WB	B71	B71	B71	NB	NB	NB
Directions Served	L	T	TR	L	T	TR	T	T		L	T	TR
Maximum Queue (ft)	365	890	886	270	2245	2246	619	619	619	305	584	558
Average Queue (ft)	118	872	871	243	1821	1804	223	214	125	284	583	515
95th Queue (ft)	370	882	879	338	2689	2688	678	655	531	392	592	533
Link Distance (ft)		862	862		2174	2174	604	604	604		513	513
Upstream Blk Time (%)		48	49		44	43	20	19	16		54	13
Queuing Penalty (veh)		367	377		0	0	0	0	0		529	123
Storage Bay Dist (ft)	340			245						280		
Storage Blk Time (%)	0	71		46	37					11	84	
Queuing Penalty (veh)	0	32		206	61					85	194	

Intersection: 1: US Hwy 395 & Phelan Road/Main Street

Movement	B33	B69	B69	SB	SB	SB	B47
Directions Served	T	T		L	T	TR	T
Maximum Queue (ft)	2966	467	472	265	525	455	5941
Average Queue (ft)	2941	437	416	265	525	455	5804
95th Queue (ft)	3163	524	547	265	527	455	6703
Link Distance (ft)	2895	430	430		455	455	5926
Upstream Blk Time (%)	91	32	15		55	6	87
Queuing Penalty (veh)	1776	313	148		0	0	0
Storage Bay Dist (ft)				240			
Storage Blk Time (%)				91	2		
Queuing Penalty (veh)				646	13		

Intersection: 2: US Hwy 395 & Poplar Street

Movement	WB	WB	B14	B14	B95	B95	NB	NB	SB	SB	B33	B33
Directions Served	L	R	T	T	T	T	T	TR	L	T	T	
Maximum Queue (ft)	618	618	596	596	59	59	1986	1984	86	20	174	81
Average Queue (ft)	613	558	590	588	49	50	1792	1789	27	1	17	5
95th Queue (ft)	625	735	618	624	73	74	2531	2543	67	8	84	37
Link Distance (ft)	546	546	524	524	44	44	1966	1966		430	513	513
Upstream Blk Time (%)	100	67	97	95	95	94	22	22				
Queuing Penalty (veh)	0	0	0	0	0	0	190	195				
Storage Bay Dist (ft)									375			
Storage Blk Time (%)												
Queuing Penalty (veh)												

Intersection: 3: US Hwy 395 & Three Flags Road

Movement	EB	EB	WB	WB	WB	NB	NB	NB	NB	SB	SB	SB
Directions Served	L	TR	L	T	R	L	T	T	R	L	T	T
Maximum Queue (ft)	104	80	181	38	153	215	934	936	950	52	155	149
Average Queue (ft)	37	29	93	6	67	97	747	758	711	15	61	66
95th Queue (ft)	80	59	153	25	129	258	1257	1247	1296	42	117	122
Link Distance (ft)	301	301		613	613		903	903	903			1966
Upstream Blk Time (%)							26	35	20			
Queuing Penalty (veh)							151	203	120			
Storage Bay Dist (ft)			245			190				225	225	
Storage Blk Time (%)						0	76					0
Queuing Penalty (veh)						0	38					0

Intersection: 3: US Hwy 395 & Three Flags Road

Movement	SB
Directions Served	R
Maximum Queue (ft)	32
Average Queue (ft)	6
95th Queue (ft)	20
Link Distance (ft)	
Upstream Blk Time (%)	
Queuing Penalty (veh)	
Storage Bay Dist (ft)	225
Storage Blk Time (%)	
Queuing Penalty (veh)	

Intersection: 4: US Hwy 395 & Joshua Street

Movement	EB	EB	WB	WB	WB	NB	NB	NB	NB	SB	SB	SB
Directions Served	L	TR	L	T	R	L	T	T	R	L	T	T
Maximum Queue (ft)	215	278	146	58	158	215	1747	1747	355	245	412	333
Average Queue (ft)	213	272	58	17	56	78	1507	1486	217	190	122	112
95th Queue (ft)	226	314	119	47	118	237	2181	2208	499	272	306	222
Link Distance (ft)		263	393	393	393		1732	1732			903	903
Upstream Blk Time (%)		65					60	63				
Queuing Penalty (veh)		0					0	0				
Storage Bay Dist (ft)	190					190			330	220		
Storage Blk Time (%)	71	10					85	83	0	9	0	0
Queuing Penalty (veh)	197	33					33	81	0	62	1	0

Intersection: 4: US Hwy 395 & Joshua Street

Movement	SB
Directions Served	R
Maximum Queue (ft)	34
Average Queue (ft)	7
95th Queue (ft)	23
Link Distance (ft)	
Upstream Blk Time (%)	
Queuing Penalty (veh)	
Storage Bay Dist (ft)	270
Storage Blk Time (%)	
Queuing Penalty (veh)	

Intersection: 5: Joshua Street & I-15 SB Off-Ramp

Movement	SB	SB
Directions Served	L	R
Maximum Queue (ft)	43	77
Average Queue (ft)	17	38
95th Queue (ft)	37	60
Link Distance (ft)		1440
Upstream Blk Time (%)		
Queuing Penalty (veh)		
Storage Bay Dist (ft)	25	
Storage Blk Time (%)	5	14
Queuing Penalty (veh)	13	4

Intersection: 6: Joshua Street & I-15 NB On-Ramp

Movement	EB
Directions Served	LT
Maximum Queue (ft)	137
Average Queue (ft)	36
95th Queue (ft)	102
Link Distance (ft)	919
Upstream Blk Time (%)	
Queuing Penalty (veh)	
Storage Bay Dist (ft)	
Storage Blk Time (%)	
Queuing Penalty (veh)	

Zone Summary

Zone wide Queuing Penalty: 6192

1: US Hwy 395 & Phelan Road/Main Street Performance by movement

2: US Hwy 395 & Poplar Street Performance by movement

3: US Hwy 395 & Three Flags Road Performance by movement

4: US Hwy 395 & Joshua Street Performance by movement

5: Joshua Street & I-15 SB Off-Ramp Performance by movement

6: Joshua Street & I-15 NB On-Ramp Performance by movement

Total Zone Performance

Intersection: 1: US Hwy 395 & Phelan Road/Main Street

Movement	EB	EB	EB	WB	WB	WB	B71	B71	B71	NB	NB	NB
Directions Served	L	T	TR	L	T	TR	T	T		L	T	TR
Maximum Queue (ft)	343	537	550	270	2245	2246	619	620	619	305	584	543
Average Queue (ft)	79	328	356	270	2206	2203	544	540	530	304	584	514
95th Queue (ft)	258	517	538	271	2439	2450	865	872	886	306	590	527
Link Distance (ft)		862	862		2174	2174	604	604	604		513	513
Upstream Blk Time (%)					88	88	81	80	74		60	10
Queuing Penalty (veh)					0	0	0	0	0		409	67
Storage Bay Dist (ft)	340			245						280		
Storage Blk Time (%)	0	13		97	6					91	22	
Queuing Penalty (veh)	0	6		548	15					470	66	

Intersection: 1: US Hwy 395 & Phelan Road/Main Street

Movement	B33	B69	B69	SB	SB	SB	B47
Directions Served	T	T		L	T	TR	T
Maximum Queue (ft)	2966	464	470	265	525	482	5941
Average Queue (ft)	2739	361	325	263	525	456	5669
95th Queue (ft)	3725	629	614	281	525	470	6985
Link Distance (ft)	2895	430	430		455	455	5926
Upstream Blk Time (%)	78	29	12		45	10	83
Queuing Penalty (veh)	1060	197	78		0	0	0
Storage Bay Dist (ft)				240			
Storage Blk Time (%)				41	62		
Queuing Penalty (veh)				329	225		

Intersection: 2: US Hwy 395 & Poplar Street

Movement	WB	WB	B14	B14	NB	NB	SB	SB	B69	B33	B33
Directions Served	L	R	T	T	T	TR	L	T	T	T	
Maximum Queue (ft)	618	611	304	274	1986	1988	258	214	22	262	169
Average Queue (ft)	508	257	99	66	1394	1391	77	14	1	99	37
95th Queue (ft)	753	677	294	246	2743	2746	196	130	21	232	119
Link Distance (ft)	546	546	524	524	1966	1966		430	2895	513	513
Upstream Blk Time (%)	61	21			16	16		0			
Queuing Penalty (veh)	0	0			129	129		2			
Storage Bay Dist (ft)							375				
Storage Blk Time (%)							0	0			
Queuing Penalty (veh)							6	0			

Intersection: 3: US Hwy 395 & Three Flags Road

Movement	EB	EB	WB	WB	WB	NB	NB	NB	NB	SB	SB	SB
Directions Served	L	TR	L	T	R	L	T	T	R	L	T	T
Maximum Queue (ft)	57	84	200	24	97	215	928	942	957	51	165	199
Average Queue (ft)	17	43	116	2	32	57	586	606	545	12	60	80
95th Queue (ft)	46	74	189	14	71	190	1181	1178	1236	36	120	146
Link Distance (ft)	301	301		613	613		903	903	903			1966
Upstream Blk Time (%)							15	26	25			
Queuing Penalty (veh)							82	143	138			
Storage Bay Dist (ft)			245			190				225	225	
Storage Blk Time (%)						0	52				0	0
Queuing Penalty (veh)						0	16				0	1

Intersection: 3: US Hwy 395 & Three Flags Road

Movement	SB
Directions Served	R
Maximum Queue (ft)	118
Average Queue (ft)	11
95th Queue (ft)	59
Link Distance (ft)	
Upstream Blk Time (%)	
Queuing Penalty (veh)	
Storage Bay Dist (ft)	225
Storage Blk Time (%)	0
Queuing Penalty (veh)	0

Intersection: 4: US Hwy 395 & Joshua Street

Movement	EB	EB	WB	WB	WB	NB	NB	NB	NB	SB	SB	SB
Directions Served	L	TR	L	T	R	L	T	T	R	L	T	T
Maximum Queue (ft)	179	170	125	127	401	215	1747	1747	355	240	280	220
Average Queue (ft)	70	65	46	18	183	72	885	844	62	134	97	112
95th Queue (ft)	144	137	95	77	406	214	2025	2014	283	219	202	199
Link Distance (ft)		263	393	393	393		1732	1732			903	903
Upstream Blk Time (%)		1			8		29	30				
Queuing Penalty (veh)		0			11		0	0				
Storage Bay Dist (ft)	190					190			330	220		
Storage Blk Time (%)	1	0				0	54	46	0	2	0	0
Queuing Penalty (veh)	1	0				0	23	15	0	12	0	0

Intersection: 4: US Hwy 395 & Joshua Street

Movement	SB
Directions Served	R
Maximum Queue (ft)	100
Average Queue (ft)	15
95th Queue (ft)	59
Link Distance (ft)	
Upstream Blk Time (%)	
Queuing Penalty (veh)	
Storage Bay Dist (ft)	270
Storage Blk Time (%)	0
Queuing Penalty (veh)	0

Intersection: 5: Joshua Street & I-15 SB Off-Ramp

Movement	WB	SB	SB
Directions Served	T	L	R
Maximum Queue (ft)	57	49	426
Average Queue (ft)	5	13	128
95th Queue (ft)	33	38	513
Link Distance (ft)	919		1440
Upstream Blk Time (%)			
Queuing Penalty (veh)			
Storage Bay Dist (ft)		25	
Storage Blk Time (%)		2	37
Queuing Penalty (veh)		9	7

Intersection: 6: Joshua Street & I-15 NB On-Ramp

Movement	EB
Directions Served	LT
Maximum Queue (ft)	84
Average Queue (ft)	19
95th Queue (ft)	62
Link Distance (ft)	919
Upstream Blk Time (%)	
Queuing Penalty (veh)	
Storage Bay Dist (ft)	
Storage Blk Time (%)	
Queuing Penalty (veh)	

Zone Summary

Zone wide Queuing Penalty: 4198

1: US Hwy 395 & Phelan Road/Main Street Performance by movement

2: US Hwy 395 & Poplar Street Performance by movement

3: US Hwy 395 & Three Flags Road Performance by movement

4: US Hwy 395 & Joshua Street Performance by movement

5: Joshua Street & I-15 SB Off-Ramp Performance by movement

6: Joshua Street & I-15 NB On-Ramp Performance by movement

Total Zone Performance

Intersection: 1: US Hwy 395 & Phelan Road/Main Street

Movement	EB	EB	EB	WB	WB	WB	B71	B71	B71	NB	NB	NB
Directions Served	L	T	TR	L	T	TR	T	T		L	T	TR
Maximum Queue (ft)	365	890	886	270	2245	2246	619	619	619	305	584	555
Average Queue (ft)	175	871	872	262	1893	1873	267	259	215	292	584	515
95th Queue (ft)	443	881	881	310	2634	2643	743	733	697	370	588	535
Link Distance (ft)		862	862		2174	2174	604	604	604		513	513
Upstream Blk Time (%)		46	47		49	48	32	31	28		53	11
Queuing Penalty (veh)		385	390		0	0	0	0	0		524	108
Storage Bay Dist (ft)	340			245						280		
Storage Blk Time (%)	0	70		81	16					8	82	
Queuing Penalty (veh)	0	51		368	27					62	210	

Intersection: 1: US Hwy 395 & Phelan Road/Main Street

Movement	B33	B69	B69	SB	SB	SB	B47
Directions Served	T	T		L	T	TR	T
Maximum Queue (ft)	2966	462	471	265	525	455	5941
Average Queue (ft)	2953	433	411	265	525	455	5670
95th Queue (ft)	3104	531	550	265	528	455	7137
Link Distance (ft)	2895	430	430		455	455	5926
Upstream Blk Time (%)	92	31	17		57	6	83
Queuing Penalty (veh)	1813	309	172		0	0	0
Storage Bay Dist (ft)				240			
Storage Blk Time (%)				91	3		
Queuing Penalty (veh)				650	19		

Intersection: 2: US Hwy 395 & Poplar Street

Movement	WB	WB	B14	B14	B95	B95	NB	NB	SB	SB	B33	B33
Directions Served	L	R	T	T	T	T	T	TR	L	T	T	
Maximum Queue (ft)	618	618	596	596	59	59	1984	1983	142	102	212	117
Average Queue (ft)	613	575	588	586	50	49	1772	1768	31	6	23	8
95th Queue (ft)	625	714	621	639	72	73	2560	2567	108	69	125	68
Link Distance (ft)	546	546	524	524	44	44	1966	1966		430	513	513
Upstream Blk Time (%)	100	74	96	95	95	93	20	20				
Queuing Penalty (veh)	0	0	0	0	0	0	176	180				
Storage Bay Dist (ft)									375			
Storage Blk Time (%)										0		
Queuing Penalty (veh)										0		

Intersection: 3: US Hwy 395 & Three Flags Road

Movement	EB	EB	WB	WB	WB	NB	NB	NB	NB	SB	SB	SB
Directions Served	L	TR	L	T	R	L	T	T	R	L	T	T
Maximum Queue (ft)	95	82	180	37	164	215	930	945	948	52	142	150
Average Queue (ft)	32	30	94	6	64	100	741	751	682	14	65	75
95th Queue (ft)	71	58	161	25	133	262	1244	1243	1294	40	121	132
Link Distance (ft)	301	301		613	613		903	903	903			1966
Upstream Blk Time (%)							22	32	17			
Queuing Penalty (veh)							134	188	103			
Storage Bay Dist (ft)			245			190				225	225	
Storage Blk Time (%)			0			0	74					
Queuing Penalty (veh)			0			0	37					

Intersection: 3: US Hwy 395 & Three Flags Road

Movement	SB
Directions Served	R
Maximum Queue (ft)	23
Average Queue (ft)	6
95th Queue (ft)	19
Link Distance (ft)	
Upstream Blk Time (%)	
Queuing Penalty (veh)	
Storage Bay Dist (ft)	225
Storage Blk Time (%)	
Queuing Penalty (veh)	

Intersection: 4: US Hwy 395 & Joshua Street

Movement	EB	EB	WB	WB	WB	NB	NB	NB	NB	SB	SB	SB
Directions Served	L	TR	L	T	R	L	T	T	R	L	T	T
Maximum Queue (ft)	215	278	197	75	149	215	1747	1747	355	245	420	306
Average Queue (ft)	214	276	74	20	52	60	1532	1501	187	201	172	126
95th Queue (ft)	223	297	155	56	101	206	2176	2209	472	286	382	248
Link Distance (ft)		263	393	393	393		1732	1732			903	903
Upstream Blk Time (%)		65					60	64				
Queuing Penalty (veh)		0					0	0				
Storage Bay Dist (ft)	190					190			330	220		
Storage Blk Time (%)	70	11					85	83	0	13	0	0
Queuing Penalty (veh)	197	36					33	81	0	94	1	0

Intersection: 4: US Hwy 395 & Joshua Street

Movement	SB
Directions Served	R
Maximum Queue (ft)	28
Average Queue (ft)	4
95th Queue (ft)	15
Link Distance (ft)	
Upstream Blk Time (%)	
Queuing Penalty (veh)	
Storage Bay Dist (ft)	270
Storage Blk Time (%)	
Queuing Penalty (veh)	

Intersection: 5: Joshua Street & I-15 SB Off-Ramp

Movement	SB	SB
Directions Served	L	R
Maximum Queue (ft)	44	66
Average Queue (ft)	16	39
95th Queue (ft)	38	61
Link Distance (ft)		1440
Upstream Blk Time (%)		
Queuing Penalty (veh)		
Storage Bay Dist (ft)	25	
Storage Blk Time (%)	6	16
Queuing Penalty (veh)	15	5

Intersection: 6: Joshua Street & I-15 NB On-Ramp

Movement	EB
Directions Served	LT
Maximum Queue (ft)	151
Average Queue (ft)	39
95th Queue (ft)	103
Link Distance (ft)	919
Upstream Blk Time (%)	
Queuing Penalty (veh)	
Storage Bay Dist (ft)	
Storage Blk Time (%)	
Queuing Penalty (veh)	

Zone Summary

Zone wide Queuing Penalty: 6370

1: US Hwy 395 & Phelan Road/Main Street Performance by movement

2: US Hwy 395 & Poplar Street Performance by movement

3: US Hwy 395 & Three Flags Road Performance by movement

4: US Hwy 395 & Joshua Street Performance by movement

5: Joshua Street & I-15 SB Off-Ramp Performance by movement

6: Joshua Street & I-15 NB On-Ramp Performance by movement

Total Zone Performance

Intersection: 1: US Hwy 395 & Phelan Road/Main Street

Movement	EB	EB	EB	WB	WB	WB	B71	B71	B71	NB	NB	NB
Directions Served	L	T	TR	L	T	TR	T	T		L	T	TR
Maximum Queue (ft)	364	895	885	270	2245	2246	619	619	619	305	584	523
Average Queue (ft)	163	766	775	270	2224	2224	576	576	556	300	584	513
95th Queue (ft)	428	1057	1048	270	2413	2417	824	819	860	353	585	518
Link Distance (ft)		862	862		2174	2174	604	604	604		513	513
Upstream Blk Time (%)		25	26		92	90	85	84	77		59	12
Queuing Penalty (veh)		160	164		0	0	0	0	0		450	93
Storage Bay Dist (ft)	340			245						280		
Storage Blk Time (%)	0	60		98	4					74	42	
Queuing Penalty (veh)	0	31		589	11					461	95	

Intersection: 1: US Hwy 395 & Phelan Road/Main Street

Movement	B33	B69	B69	SB	SB	SB	B47
Directions Served	T	T		L	T	TR	T
Maximum Queue (ft)	2966	466	474	265	525	465	5941
Average Queue (ft)	2822	400	363	263	525	455	5709
95th Queue (ft)	3613	603	607	283	527	460	6901
Link Distance (ft)	2895	430	430		455	455	5926
Upstream Blk Time (%)	86	31	13		52	11	83
Queuing Penalty (veh)	1295	237	98		0	0	0
Storage Bay Dist (ft)				240			
Storage Blk Time (%)				88	23		
Queuing Penalty (veh)				848	100		

Intersection: 2: US Hwy 395 & Poplar Street

Movement	WB	WB	B14	B14	NB	NB	SB	SB	B33	B33
Directions Served	L	R	T	T	T	TR	L	T	T	
Maximum Queue (ft)	592	374	157	143	1987	1991	166	71	238	137
Average Queue (ft)	453	167	59	39	1602	1599	53	3	53	17
95th Queue (ft)	732	541	223	182	2745	2748	135	53	156	74
Link Distance (ft)	546	546	524	524	1966	1966		430	513	513
Upstream Blk Time (%)	43	12			17	16				
Queuing Penalty (veh)	0	0			151	141				
Storage Bay Dist (ft)							375			
Storage Blk Time (%)										
Queuing Penalty (veh)										

Intersection: 3: US Hwy 395 & Three Flags Road

Movement	EB	EB	WB	WB	WB	NB	NB	NB	NB	SB	SB	SB
Directions Served	L	TR	L	T	R	L	T	T	R	L	T	T
Maximum Queue (ft)	78	133	268	383	83	215	929	940	954	47	132	161
Average Queue (ft)	22	51	188	66	35	89	700	723	666	13	66	81
95th Queue (ft)	57	98	290	307	73	248	1215	1202	1290	37	115	136
Link Distance (ft)	301	301		613	613		903	903	903			1966
Upstream Blk Time (%)							19	31	30			
Queuing Penalty (veh)							113	189	184			
Storage Bay Dist (ft)			245			190				225	225	
Storage Blk Time (%)			13			0	65					
Queuing Penalty (veh)			1			0	26					

Intersection: 3: US Hwy 395 & Three Flags Road

Movement	SB
Directions Served	R
Maximum Queue (ft)	36
Average Queue (ft)	9
95th Queue (ft)	26
Link Distance (ft)	
Upstream Blk Time (%)	
Queuing Penalty (veh)	
Storage Bay Dist (ft)	225
Storage Blk Time (%)	
Queuing Penalty (veh)	

Intersection: 4: US Hwy 395 & Joshua Street

Movement	EB	EB	WB	WB	WB	NB	NB	NB	NB	SB	SB	SB
Directions Served	L	TR	L	T	R	L	T	T	R	L	T	T
Maximum Queue (ft)	197	202	169	149	395	215	1747	1747	355	244	340	269
Average Queue (ft)	97	78	65	29	208	64	1206	1169	88	150	116	125
95th Queue (ft)	185	188	130	112	439	207	2189	2198	337	240	252	211
Link Distance (ft)		263	393	393	393		1732	1732			903	903
Upstream Blk Time (%)		5		0	13		42	45				
Queuing Penalty (veh)		0		0	20		0	0				
Storage Bay Dist (ft)	190					190			330	220		
Storage Blk Time (%)	7	0				0	71	67	0	4	0	0
Queuing Penalty (veh)	7	0				0	33	28	0	32	1	0

Intersection: 4: US Hwy 395 & Joshua Street

Movement	SB
Directions Served	R
Maximum Queue (ft)	104
Average Queue (ft)	17
95th Queue (ft)	63
Link Distance (ft)	
Upstream Blk Time (%)	
Queuing Penalty (veh)	
Storage Bay Dist (ft)	270
Storage Blk Time (%)	
Queuing Penalty (veh)	

Intersection: 5: Joshua Street & I-15 SB Off-Ramp

Movement	WB	SB	SB
Directions Served	T	L	R
Maximum Queue (ft)	36	49	492
Average Queue (ft)	5	16	136
95th Queue (ft)	28	46	440
Link Distance (ft)	919		1440
Upstream Blk Time (%)			
Queuing Penalty (veh)			
Storage Bay Dist (ft)		25	
Storage Blk Time (%)		2	44
Queuing Penalty (veh)		10	11

Intersection: 6: Joshua Street & I-15 NB On-Ramp

Movement	EB
Directions Served	LT
Maximum Queue (ft)	89
Average Queue (ft)	24
95th Queue (ft)	71
Link Distance (ft)	919
Upstream Blk Time (%)	
Queuing Penalty (veh)	
Storage Bay Dist (ft)	
Storage Blk Time (%)	
Queuing Penalty (veh)	

Zone Summary

Zone wide Queuing Penalty: 5580

1: US Hwy 395 & Phelan Road/Main Street Performance by movement

2: US Hwy 395 & Poplar Street Performance by movement

3: US Hwy 395 & Three Flags Road Performance by movement

4: US Hwy 395 & Joshua Street Performance by movement

5: Joshua Street & I-15 SB Off-Ramp Performance by movement

6: Joshua Street & I-15 NB On-Ramp Performance by movement

Total Zone Performance

Intersection: 1: US Hwy 395 & Phelan Road/Main Street

Movement	EB	EB	EB	WB	WB	WB	B71	B71	B71	NB	NB	NB
Directions Served	L	T	TR	L	T	TR	T	T		L	T	TR
Maximum Queue (ft)	365	882	885	270	2245	2246	619	620	619	305	584	552
Average Queue (ft)	132	870	870	246	2162	2157	501	499	473	288	584	516
95th Queue (ft)	390	879	879	328	2525	2539	885	884	902	379	589	538
Link Distance (ft)		862	862		2174	2174	604	604	604		513	513
Upstream Blk Time (%)		47	48		77	80	72	71	69		53	11
Queuing Penalty (veh)		418	423		0	0	0	0	0		624	129
Storage Bay Dist (ft)	340			245						280		
Storage Blk Time (%)	0	71		47	38					2	85	
Queuing Penalty (veh)	0	41		263	63					22	245	

Intersection: 1: US Hwy 395 & Phelan Road/Main Street

Movement	B33	B69	B69	SB	SB	SB	B47
Directions Served	T	T		L	T	TR	T
Maximum Queue (ft)	2966	467	475	265	525	457	5941
Average Queue (ft)	2954	438	428	265	524	455	5810
95th Queue (ft)	3089	503	511	266	529	458	6652
Link Distance (ft)	2895	430	430		455	455	5926
Upstream Blk Time (%)	94	32	17		55	6	86
Queuing Penalty (veh)	2186	377	195		0	0	0
Storage Bay Dist (ft)				240			
Storage Blk Time (%)				91	3		
Queuing Penalty (veh)				769	23		

Intersection: 2: US Hwy 395 & Poplar Street

Movement	WB	WB	B14	B14	B95	B95	NB	NB	SB	B33	B33
Directions Served	L	R	T	T	T	T	T	TR	L	T	
Maximum Queue (ft)	618	618	596	596	59	59	1989	1984	59	174	75
Average Queue (ft)	614	561	589	587	51	49	1871	1868	20	24	7
95th Queue (ft)	625	750	623	633	72	74	2380	2391	52	113	47
Link Distance (ft)	546	546	524	524	44	44	1966	1966		513	513
Upstream Blk Time (%)	99	77	96	95	94	93	22	23			
Queuing Penalty (veh)	0	0	0	0	0	0	241	252			
Storage Bay Dist (ft)									375		
Storage Blk Time (%)											
Queuing Penalty (veh)											

Intersection: 3: US Hwy 395 & Three Flags Road

Movement	EB	EB	WB	WB	WB	NB	NB	NB	NB	SB	SB	SB
Directions Served	L	TR	L	T	R	L	T	T	R	L	T	T
Maximum Queue (ft)	116	83	207	38	192	215	931	936	957	49	128	138
Average Queue (ft)	47	37	115	8	85	114	801	806	756	16	68	71
95th Queue (ft)	97	70	186	28	158	277	1228	1220	1278	42	118	125
Link Distance (ft)	301	301		613	613		903	903	903			1966
Upstream Blk Time (%)							29	42	29			
Queuing Penalty (veh)							210	307	212			
Storage Bay Dist (ft)			245			190				225	225	
Storage Blk Time (%)						0	83					
Queuing Penalty (veh)						0	55					

Intersection: 3: US Hwy 395 & Three Flags Road

Movement	SB
Directions Served	R
Maximum Queue (ft)	23
Average Queue (ft)	7
95th Queue (ft)	20
Link Distance (ft)	
Upstream Blk Time (%)	
Queuing Penalty (veh)	
Storage Bay Dist (ft)	225
Storage Blk Time (%)	
Queuing Penalty (veh)	

Intersection: 4: US Hwy 395 & Joshua Street

Movement	EB	EB	WB	WB	WB	NB	NB	NB	NB	SB	SB	SB
Directions Served	L	TR	L	T	R	L	T	T	R	L	T	T
Maximum Queue (ft)	215	278	197	131	296	215	1747	1747	355	245	459	376
Average Queue (ft)	214	274	73	24	106	68	1689	1680	211	202	147	132
95th Queue (ft)	216	312	153	101	265	222	1984	2008	494	279	361	265
Link Distance (ft)		263	393	393	393		1732	1732			903	903
Upstream Blk Time (%)		75			3		77	82				
Queuing Penalty (veh)		0			4		0	0				
Storage Bay Dist (ft)	190					190			330	220		
Storage Blk Time (%)	80	8				0	89	89	0	13	0	0
Queuing Penalty (veh)	241	27				0	41	113	0	107	1	0

Intersection: 4: US Hwy 395 & Joshua Street

Movement	SB
Directions Served	R
Maximum Queue (ft)	82
Average Queue (ft)	8
95th Queue (ft)	51
Link Distance (ft)	
Upstream Blk Time (%)	
Queuing Penalty (veh)	
Storage Bay Dist (ft)	270
Storage Blk Time (%)	
Queuing Penalty (veh)	

Intersection: 5: Joshua Street & I-15 SB Off-Ramp

Movement	WB	SB	SB
Directions Served	T	L	R
Maximum Queue (ft)	11	49	149
Average Queue (ft)	1	17	52
95th Queue (ft)	13	41	119
Link Distance (ft)	919		1440
Upstream Blk Time (%)			
Queuing Penalty (veh)			
Storage Bay Dist (ft)		25	
Storage Blk Time (%)		5	24
Queuing Penalty (veh)		17	9

Intersection: 6: Joshua Street & I-15 NB On-Ramp

Movement	EB
Directions Served	LT
Maximum Queue (ft)	123
Average Queue (ft)	39
95th Queue (ft)	97
Link Distance (ft)	919
Upstream Blk Time (%)	
Queuing Penalty (veh)	
Storage Bay Dist (ft)	
Storage Blk Time (%)	
Queuing Penalty (veh)	

Zone Summary

Zone wide Queuing Penalty: 7617

Attachment E

Caltrans Collision Data

M e m o r a n d u m

Making Conservation a California Way of Life.

To: TYLER MATTHEWS
TRANSPORTATION PLANNER
DUDEK

Date: November 10, 2025

File: 08-SBD-395
PM R3.981 to PM 7.113
08-SBD-015
Various Locations
between PM 31.256
and PM 34.226

From: JUAN CERROS
Acting Senior Transportation Engineer
District 8 Traffic Operations
Surveillance Region C

Subject: Collision Data for the Local Development Study near the Intersection of US 395 and Phelan Rd

The data provided is protected by 23 U.S.C. § 407, and the data shall not be subject to discovery, nor admitted as evidence in any applicable legal proceeding against the State of California. The State of California, Department of Transportation does not, by allowing the release of this information waive any rights it has under 23 U.S.C. § 407.

Protected by 23 U.S.C., Section 407

Table 1A summarizes crash rates for a segment along US 395 from PM R3.981 to PM 7.113. The Table B report was generated on 10/21/2025, and they depict existing crash rates per million vehicle miles for the most recent 60-month period from 01/01/2020 to 12/31/2024 from the Traffic Accident Surveillance and Analysis System (TASAS).

TABLE 1A

TASAS Table B Crash Rates (01/01/2020 – 12/31/2024)

Location Route 395	Total No. of Crashes	ACTUAL (per million vehicle miles)			AVERAGE (per million vehicle miles)		
		Fatal Crashes	Fatal + Injury Crashes	Total (1)	Fatal Crashes	Fatal + Injury Crashes	Total (1)
PM R3.981 to 7.113	207	0.034	0.45	1.165	0.016	0.43	0.97

(1) All reported crashes (includes Property Damage Only (PDO) Crashes)

Table 1A above summarizes and compares the actual crash rates for the segment of US 395 from PM R3.981 to PM 7.113 to the average rates for similar facilities throughout the State. The total crash rates include all reported crashes: Fatal, Injury, and Property Damage.

US 395 PM R3.981 to PM 7.113

Analysis of the TASAS Table B records shows a total of 207 crashes within the segment of US 395 from PM R3.981 to PM 7.113 and study periods summarized above, with a total rate of fatal and injury related crashes that is above the average for similar facilities statewide, and a total rate of crashes that is above the average for similar facilities statewide.

Detailed analysis per the TASAS Selective Accident Retrieval (TSAR) generated on 10/21/2025 shows that the primary crash factors in the segment were:

- "Speeding,"
- "Other Violations,"
- "Improper Turn,"
- "Failure to Yield,"
- "Influence Alcohol,"

Protected by 23 U.S.C., Section 407

- "Unknown,"
- "Follow Too Close",
- "Improper Driving", and
- "Not Stated."

The types of crashes included:

- 89 "Rear End,"
- 47 "Broadside,"
- 41 "Sideswipe,"
- 11 "Hit Object,"
- 8 "Head-On",
- 7 "Overturn",
- 3 "Auto-Pedestrian", and
- 1 "Other."

Protected by 23 U.S.C., Section 407

US 395 Intersections at PM R4.517, PM R4.710, PM R4.854, and PM 5.613

Table 2A summarizes crash rates for intersections of US 395 at PM R4.517, PM R4.710, PM R4.854, and PM 5.613. The Table B report was generated on 10/21/2025, and they depict existing crash rates per million vehicles for the most recent 60-month period from 01/01/2020 to 12/31/2024 from the Traffic Accident Surveillance and Analysis System (TASAS).

TABLE 2A

TASAS Table B Crash Rates (01/01/2020 – 12/31/2024)

Intersection Locations Route 395	Total No. of Crashes	ACTUAL (per million vehicles)			AVERAGE (per million vehicles)		
		Fatal Crashes	Fatal + Injury Crashes	Total (1)	Fatal Crashes	Fatal + Injury Crashes	Total (1)
PM R4.517	34	0.019	0.32	0.64	0.002	0.16	0.33
PM R4.710	11	0.018	0.04	0.20	0.002	0.16	0.33
PM R4.854	8	0.00	0.02	0.14	0.002	0.06	0.13

PM 5.613	46	0.00	0.29	0.84	0.003	0.220	0.550

(1) All reported crashes (includes Property Damage Only (PDO) Crashes)

Table 2A above summarizes and compares the actual crash rates the intersections of US 395 at PM R4.517, PM R4.710, PM R4.854, and PM 5.613 to the average rates for similar facilities throughout the State. The total crash rates include all reported crashes: Fatal, Injury, and Property Damage.

US 395 and Joshua Street PM R4.517

Analysis of the TASAS Table B records shows a total of 34 crashes within the intersection of US 395 and Joshua Street PM R4.517 and study periods summarized above, with a total rate of fatal and injury related crashes that is above the average for similar facilities statewide, and a total rate of crashes that is above the average for similar facilities statewide.

Detailed analysis per the TASAS Selective Accident Retrieval (TSAR) generated on 10/22/2025 shows that the primary crash factors in the segment were:

- "Other Violations,"
- "Speeding,"
- "Unknown,"
- "Failure to Yield," and
- "Improper Turn."

The types of crashes included:
- 14 "Broadside,"
- 11 "Rear End,"
- 6 "Sideswipe," and
- 3 "Head-on."

US 395 and Three Flags Court PM R4.710

Analysis of the TASAS Table B records shows a total of 11 crashes within the intersection of US 395 and Three Flags Ct at PM R4.710 and study periods

Protected by 23 U.S.C. Section 407

summarized above, with a total rate of fatal and injury related crashes that is below the average for similar facilities statewide, and a total rate of crashes that is below the average for similar facilities statewide.

Detailed analysis per the TASAS Selective Accident Retrieval (TSAR) generated on 10/22/2025 shows that the primary crash factors in the segment were:

- "Speeding,"
- "Other Violations," and
- "Improper Turn."

The types of crashes included:

- 5 "Rear End,"
- 4 "Broadside,"
- 1 "Sideswipe," and
- 1 "Auto-Pedestrian."

US 395 and Poplar Street PM R4.854

Analysis of the TASAS Table B records shows a total of 8 crashes within the intersection of US 395 and Poplar St at PM R4.854 and study periods summarized above, with a total rate of fatal and injury related crashes that is below the average for similar facilities statewide, and a total rate of crashes that is above the average for similar facilities statewide.

Detailed analysis per the TASAS Selective Accident Retrieval (TSAR) generated on 10/22/2025 shows that the primary crash factors in the segment were:

- "Speeding,"
- "Improper Turn,"
- "Failure to Yield," and
- "Other Violations."

The types of crashes included:

- 4 "Rear End,"
- 3 "Broadside," and
- 1 "Hit Object."

Protected by 23 U.S.C., Section 407

US 395 and Phelan Rd PM 5.613

Analysis of the TASAS Table B records shows a total of 46 crashes within the intersection of US 395 and Phelan Rd PM 5.613 and study periods summarized above, with a total rate of fatal and injury related crashes that is above the average for similar facilities statewide, and a total rate of crashes that is above the average for similar facilities statewide.

Detailed analysis per the TASAS Selective Accident Retrieval (TSAR) generated on 10/22/2025 shows that the primary crash factors in the segment were:

- "Speeding,"
- "Other Violations,"
- "Failure to Yield,"
- "Improper Turn,"
- "Unknown,"
- "Influence of Alcohol,"
- "Improper Driving," and
- "Not Stated."

The types of crashes included:

- 22 "Rear End,"
- 18 "Broadside,"
- 3 "Sideswipe,"
- 1 "Head-On,"
- 1 "Hit Object," and
- 1 "Auto-Pedestrian."

<u>I-15 Ramps at Various Locations from PM 31.256 to PM 34.226</u>

Table 3A summarizes crash rates for the I-15 ramps to US 395, Joshua Street, and Main Street from PM 31.256 to PM 34.226. The Table B report was generated on 10/22/2025, and they depict existing crash rates per million vehicles for the most recent 60-month period from 01/01/2020 to 12/31/2024 from the Traffic Accident Surveillance and Analysis System (TASAS).

Protected by 23 U.S.C., Section 407

Protected by 23 U.S.C. Section 407

TABLE 3A

TASAS Table B Crash Rates (01/01/2020 – 12/31/2024)

Ramp Locations Interstate 15	Total No. of Crashes	ACTUAL (per million vehicles)			AVERAGE (per million vehicles)		
		Fatal Crashes	Fatal + Injury Crashes	Total (1)	Fatal Crashes	Fatal + Injury Crashes	Total (1)
PM 31.256	25	0.00	0.29	1.05	0.019	0.14	0.43
PM 31.692	7	0.00	0.13	0.30	0.005	0.15	0.46
PM 32.522	1	0.00	0.00	0.21	0.002	0.23	0.63
PM 32.544	5	0.00	0.00	0.76	0.003	0.38	1.04
PM 33.754	1	0.00	0.55	0.55	0.004	0.23	0.70
PM 33.916	30	0.047	0.28	1.41	0.003	0.38	1.04
PM 33.978	2	0.00	1.1	1.1	0.002	0.23	0.77
PM 34.01	2	0.00	0.00	0.47	0.002	0.23	0.77
PM 34.143	14	0.00	0.18	0.86	0.003	0.38	1.04
PM 34.226	3	0.00	0.08	0.25	0.002	0.23	0.63

(1) All reported crashes (includes Property Damage Only (PDO) Crashes)

Table 3A above summarizes and compares the actual crash rates for the I-15 ramps to US 395, Joshua Street, and Main Street from PM 31.256 to PM 34.226 to the average rates for similar facilities throughout the State. The total crash rates include all reported crashes: Fatal, Injury, and Property Damage.

I-15 NB Offramp to US 395 PM 31.256

Analysis of the TASAS Table B records shows a total of 25 crashes within the I-15 NB Offramp to US 395 at PM 31.256 and study periods summarized above, with a total rate of fatal and injury related crashes that is above the average for similar facilities statewide, and a total rate of crashes that is above the average for similar facilities statewide.

Detailed analysis per the TASAS Selective Accident Retrieval (TSAR) generated on 10/22/2025 shows that the primary crash factors in the segment were:

- "Improper Turn,"
- "Other Violations,"
- "Speeding,"
- "Influence of Alcohol," and
- "Other than Driver."

The types of crashes included:

- 10 "Hit Object,"
- 6 "Overturn,"
- 5 "Sideswipe," and
- 4 "Rear End."

I-15 SB Onramp from US 395 PM 31.692

Analysis of the TASAS Table B records shows a total of 7 crashes within the I-15 SB Onramp from US 395 at PM 31.692 and study periods summarized above, with a total rate of fatal and injury related crashes that is below the average for similar facilities statewide, and a total rate of crashes that is below the average for similar facilities statewide.

Detailed analysis per the TASAS Selective Accident Retrieval (TSAR) generated on 10/22/2025 shows that the primary crash factors in the segment were:

- "Improper Turn," and
- "Other Violations."

The types of crashes included:

- 4 "Sideswipe,"
- 2 "Overturn," and
- 1 "Hit Object."

Protected by 23 U.S.C., Section 407

I-15 NB Onramp from Joshua St PM 32.522

Analysis of the TASAS Table B records shows a total of 1 crash within the I-15 NB Onramp from Joshua St at PM 32.522 and study periods summarized above, with a total rate of fatal and injury related crashes that is below the average for similar facilities statewide, and a total rate of crashes that is below the average for similar facilities statewide.

Detailed analysis per the TASAS Selective Accident Retrieval (TSAR) generated on 10/22/2025 shows that the primary crash factor in the segment was:

- "Speeding."

The type of crash included:
- 1 "Hit Object."

I-15 SB Offramp to Joshua Street PM 32.544

Analysis of the TASAS Table B records shows a total of 5 crashes within the I-15 SB Offramp to Joshua St at PM 32.544 and study periods summarized above, with a total rate of fatal and injury related crashes that is below the average for similar facilities statewide, and a total rate of crashes that is below the average for similar facilities statewide.

Detailed analysis per the TASAS Selective Accident Retrieval (TSAR) generated on 10/22/2025 shows that the primary crash factors in the segment were:

- "Speeding," and
- "Failure to Yield."

The types of crashes included:
- 3 "Rear End,"
- 1 "Broadside," and
- 1 "Hit Object."

I-15 SB Onramp from EB Main Street PM 33.754

Analysis of the TASAS Table B records shows a total of 1 crash within the I-15 SB Onramp from EB Main St at PM 33.754 and study periods summarized above, with a total rate of fatal and injury related crashes that is above the average for similar

Protected by 23 U.S.C., Section 407

facilities statewide, and a total rate of crashes that is below the average for similar facilities statewide.

Detailed analysis per the TASAS Selective Accident Retrieval (TSAR) generated on 10/22/2025 shows that the primary crash factor in the segment was:

- "Speeding."

The type of crash included:
- 1 "Overturn."

I-15 NB Offramp to Main Street PM 33.916

Analysis of the TASAS Table B records shows a total of 30 crashes within the I-15 NB Offramp to Main St at PM 33.916 and study periods summarized above, with a total rate of fatal and injury related crashes that is below the average for similar facilities statewide, and a total rate of crashes that is above the average for similar facilities statewide.

Detailed analysis per the TASAS Selective Accident Retrieval (TSAR) generated on 10/22/2025 shows that the primary crash factors in the segment were:

- "Other Violations,"
- "Speeding,"
- "Improper Turn,"
- "Unknown," and
- "Influence of Alcohol."

The types of crashes included:
- 11 "Rear End,"
- 8 "Broadside,"
- 7 "Sideswipe,"
- 3 "Hit Object," and
- 1 "Overturn."

I-15 SB Onramp to EB Main Street PM 33.978

Analysis of the TASAS Table B records shows a total of 2 crashes within the I-15 SB Onramp to EB Main St at PM 33.978 and study periods summarized above, with a total rate of fatal and injury related crashes that is above the average for similar

Protected by 23 U.S.C. Section 407

facilities statewide, and a total rate of crashes that is above the average for similar facilities statewide.

Detailed analysis per the TASAS Selective Accident Retrieval (TSAR) generated on 10/22/2025 shows that the primary crash factors in the segment were:

- "Speeding," and
- "Improper Turn."

The types of crashes included:
- 1 "Rear End," and
- 1 "Broadside."

I-15 SB Onramp to WB Main Street PM 34.01

Analysis of the TASAS Table B records shows a total of 2 crashes within the I-15 SB Onramp to WB Main St at PM 34.01 and study periods summarized above, with a total rate of fatal and injury related crashes that is below the average for similar facilities statewide, and a total rate of crashes that is below the average for similar facilities statewide.

Detailed analysis per the TASAS Selective Accident Retrieval (TSAR) generated on 10/22/2025 shows that the primary crash factor in this segment was:

- "Other Violations."

The types of crashes included:
- 1 "Head-On," and
- 1 "Sideswipe."

I-15 SB Offramp to Main Street PM 34.143

Analysis of the TASAS Table B records shows a total of 14 crashes within the I-15 SB Offramp to Main St at PM 34.143 and study periods summarized above, with a total rate of fatal and injury related crashes that is below the average for similar facilities statewide, and a total rate of crashes that is below the average for similar facilities statewide.

Detailed analysis per the TASAS Selective Accident Retrieval (TSAR) generated on 10/22/2025 shows that the primary crash factors in the segment were:

Protected by 23 U.S.C.; Section 407

- "Other Violations,"
- "Speeding,"
- "Unknown," and
- "Improper Turn".

The types of crashes included:

- 8 "Broadside,"
- 4 "Rear End,"
- 1 "Hit Object," and
- 1 "Sideswipe."

I-15 NB Onramp to WB Main Street PM 34.226

Analysis of the TASAS Table B records shows a total of 3 crashes within the I-15 NB Onramp to WB Main St at PM 34.226 and study periods summarized above, with a total rate of fatal and injury related crashes that is below the average for similar facilities statewide, and a total rate of crashes that is below the average for similar facilities statewide.

Detailed analysis per the TASAS Selective Accident Retrieval (TSAR) generated on 10/22/2025 shows that the primary crash factors in the segment were:

- "Other Violations."

The types of crashes included:

- 3 "Broadside."

Protected by 23 U.S.C. Section 407

Analysis Conducted By:

Christopher Acebal _____ 11/10/2025

Name: Christopher Acebal Date

Title: Transportation Engineer

Email: Christopher.Acebal@dot.ca.gov

Phone (951) 323-8091

Approved for Release:

_____ 11/10/2025

Name: Juan Cerros Date

Title: Traffic Operations (Acting) Office Chief, Surveillance C

Email: Juan.Cerros@dot.ca.gov

Phone (909) 746-3516

Protected by 23 U.S.C., Section 407

Appendix I

Transportation Technical Memo

DUDEK
MAIN OFFICE
605 THIRD STREET
ENCINITAS, CALIFORNIA 92024
T 800.450.1818 F 760.632.0164



MEMORANDUM

To:	Ryan Leonard, City of Hesperia Planning Department
Prepared By:	Lisa Valdez, Dudek, Senior Transportation Planner
Date:	May 15, 2024
Stamped and Reviewed by	Michael Rowe, Dudek, Engineering Project Manager, P.E., (January 22, 2026)
Subject:	Phelan 20 Industrial Warehouse
cc:	Chelsea Ohanesian, Project Manager, Dudek
Attachments:	A – Urban Crossroads VMT Analysis

Dudek has prepared the following transportation assessment for the proposed Phelan Warehouse Project (project). The Project includes the construction of an industrial warehouse building on an approximately 21.02-acre Project site generally located west of US Highway 395, east of Los Banos Avenue, and south of Phelan Road in the City of Hesperia (City) (Figure 1, Project Location). The transportation assessment has been prepared consistent with the requirements and policies from the *City of Hesperia's Traffic Impact Analysis Guidelines for Vehicle Miles Traveled (VMT) and Level of Service Assessment (LOS)*[1], the San Bernardino County Transportation Authority's (SBCTA) *Congestion Management Program* (CMP), and our recent experience with projects in the City. The following Technical Memorandum documents existing roadway, pedestrian, bicycle, and transit conditions; estimates the project trip generation; evaluates the proposed project site access; and provides a VMT analysis.

1.0 Project Description

The Project location is shown in Figure 1 and the conceptual site plan is shown in Figure 2. The project includes the construction of a speculative industrial warehouse totaling 419,700 square feet (SF) and associated improvements, including loading docks, truck and vehicle parking, and landscaped areas. Access to the site would be from US Highway 395 to Phelan Road. The Project would include improvements along Phelan Road, including frontage landscaping and pedestrian improvements. Access to the Project site would be provided from one driveway on the north side of the Project site on Phelan Road, and two driveways on the east side of the Project site along a new street that would be developed as part of the Project. The new street would connect to Phelan Road, resulting in a new intersection on Phelan Road. The Project would include paved passenger vehicle parking areas located north and west of the industrial/warehouse building, as well as tractor-trailer stalls and loading docks located on the east side of the building. In total, the Project would provide approximately 62 loading dock positions, approximately 57 tractor-trailer stalls, and 199 passenger vehicle parking spaces (including accessible spaces).

[1] City of Hesperia. 2020. City of Hesperia Traffic Impact Analysis Guidelines for Vehicle Miles Traveled (VMT) and Level of Service Assessment (LOS). July 1.

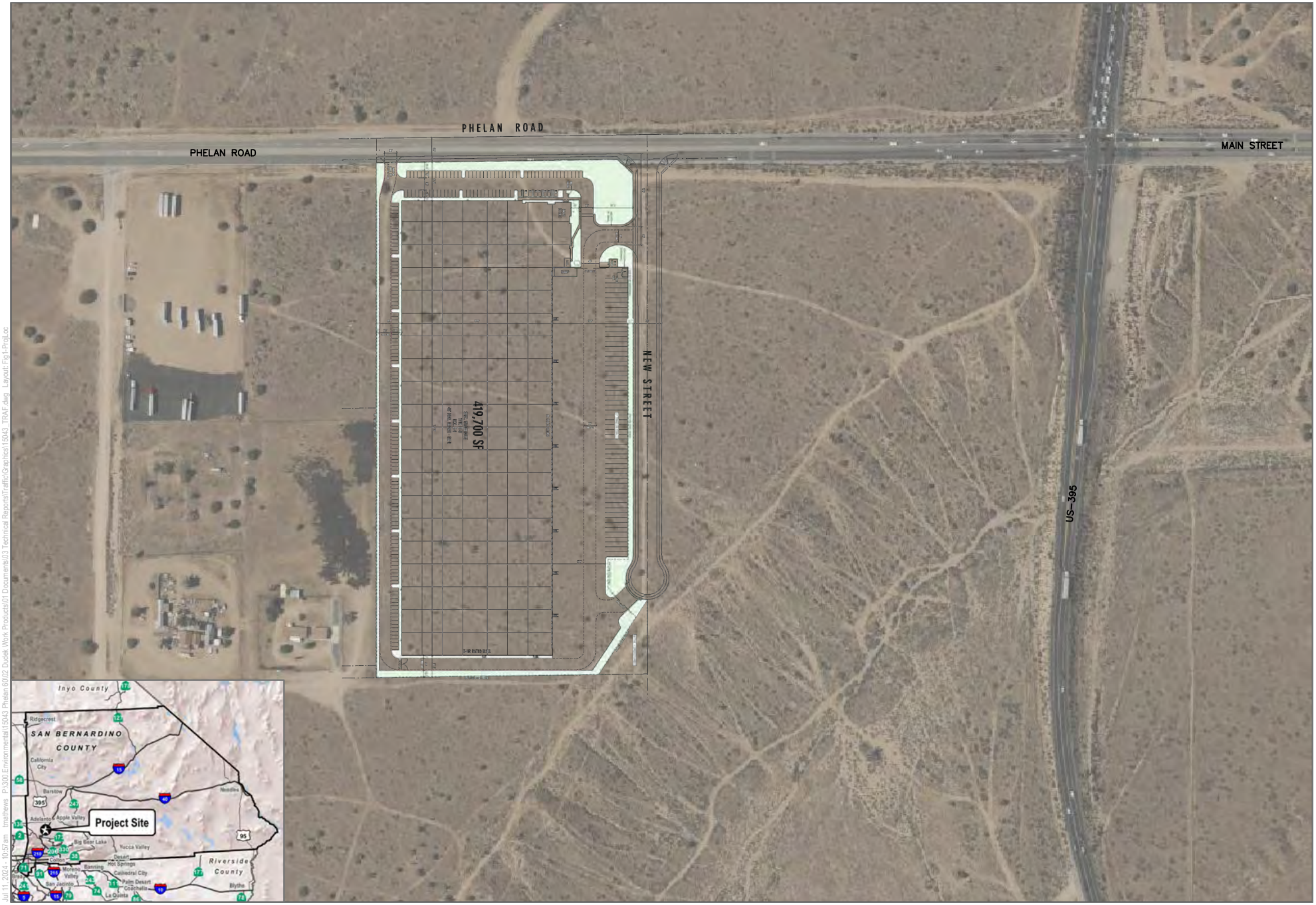

SOURCE: Bing Maps; RGA 2023

NOT TO SCALE

Figure 1

Project Location and Study Area

Phelan 20 Industrial

DUDEK

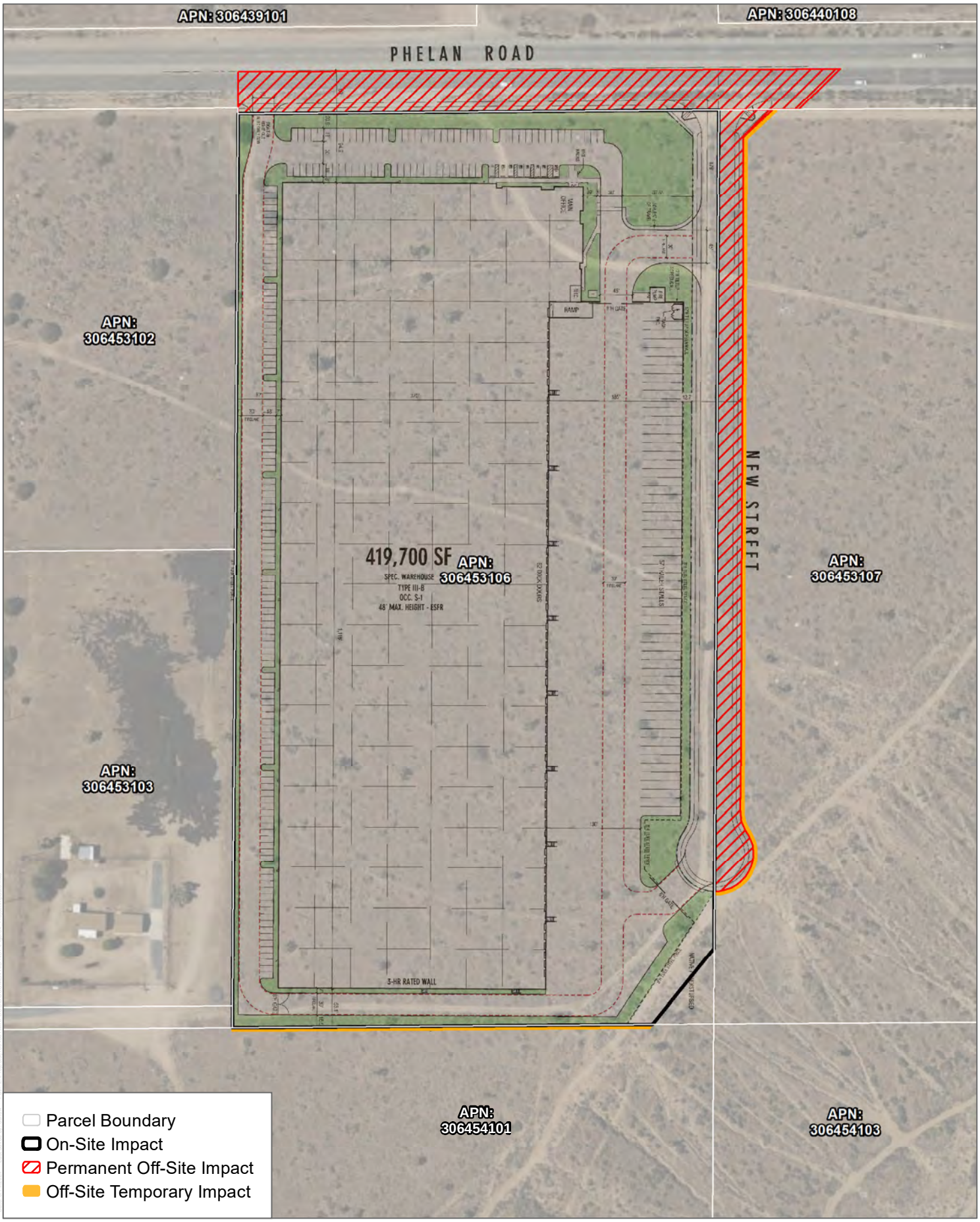

SOURCE: Bing Imagery 2022

DUDEK

0 80 160 Feet

FIGURE 2

Site Plan

Phelan 20 Project

2.0 Existing Transportation Network

This section describes existing conditions within the study area. Characteristics are provided for the existing roadway, transit, bicycle and pedestrian facilities. The City's designated truck routes are shown on Figure 3.

2.1 Roadway Network

Interstate 15 (I-15) is a north-south, divided, four to eight-lane freeway located approximately one mile east of the project site. I-15 is a major interstate freeway that begins near the Mexico—US Border and extends to Alberta, Canada, and serves as a critical connection for many other regional roadways, freeways, and highways. Caltrans classifies I-15 as a designated truck route[2]. The posted speed limit is 65 miles per hour (MPH).

US Highway (Hwy) 395 is a north-south two-lane to six-lane, generally undivided highway located to the east of the project site. The highway's northern terminus is at the US-Canada border, while the southern terminus is at I-15 near Hesperia. The City of Hesperia classifies US Hwy 395 as a special street section from Joshua Tree Street/ US Hwy 395 off of I-15 towards the City's northern boundary at Smoke Tree Road. US Hwy 395 conveys local traffic to the I-15 freeway and provides access to cities in the region, including Adelanto and Phelan. Caltrans and the City of Hesperia classify US Hwy 395 as a designated truck route. Bike and pedestrian facilities are not located along this portion of the roadway. The posted speed limit is 55 MPH.

Phelan Road is an east-west, two to six-lane undivided roadway that borders the project site on the north. The City of Hesperia classifies Phelan Road as a major arterial roadway, and a truck route west of US Hwy 395[3]. East of US Hwy 395, Phelan Road transitions into Main Street. No bicycle and pedestrian facilities are located along this roadway. Bus stops for the Victory Valley Transit Authority's (VVTA) 21P and 21W buses are located along this roadway. The posted speed limit is 55 MPH.

Main Street is an east-west, two to six-lane roadway with raised medians and left-turn pockets located to the east of the project site. The City of Hesperia classifies Main Street as a major arterial roadway from US Hwy 395 to the I-15 northbound on-ramp, a special street section from I-15 northbound on-ramp to I Avenue, and an arterial roadway from I Avenue to the City limit[4]. Pedestrian facilities are generally located on both sides of the roadway. Bus stops for VVTA routes 25, 64, and 68 are also located along this roadway. The posted speed limit ranges from 50 to 55 MPH.

2.2 Transit System

The City of Hesperia is primarily served by bus services provided by Victor Valley Transit Authority (VVTA), which provides regional and local services throughout Victor Valley. VVTA provides local bus service for the communities of Adelanto, Apple Valley, Hesperia, Victorville, and unincorporated areas of San Bernardino County. VVTA operates five bus routes in Hesperia, providing bus connections between shopping centers and the Mall of Victor Valley, hospitals, schools and colleges, and residential areas. VVTA also offers paratransit services for persons with special

2 City of Hesperia. 2021. "Truck Routes." https://www.cityofhesperia.us/1432/Truck-Routes
3 City of Hesperia. 2019. *City of Hesperia General Plan Update.* Accessed July 19, 2021. https://www.cityofhesperia.us/DocumentCenter/View/15728/General-Plan-Update-August-2019
4 City of Hesperia. 2019. *City of Hesperia General Plan Update.* Accessed July 19, 2021. https://www.cityofhesperia.us/DocumentCenter/View/15728/General-Plan-Update-August-2019

needs on any paved street within Hesperia as long as it is within their service boundaries. The VVTA paratransit services do not travel a fixed route and provide a flexible alternative to the fixed bus routes.

Routes 21P/W, 25, 64, and 68, shown in Figure 4, Existing Transit Routes, are the closest bus routes to the project site, with bus stops on Main Street, Escondido Avenue, and Live Oak Street[5], as described below. The Cataba Road and Main Street bus stop would serve as the nearest bus stop to the project site, located approximately one mile east of the project site.

- **Route 21P/W** serves Victor Valley, Pinon Hills, and Wrightwood. The 21W route provides service between the Wrightwood Community Center and the Victor Valley Mall, and the 21P route provides service between the Pinon Hill Community Center and Cataba Road/Main Street. Route 21P/W provides 1.25-hour weekday peak service headways.
- **Route 25** serves Escondido Avenue, Ranchero Road, Oak Hills High School, Mariposa Road, and San Joaquin Valley College. Route 25 provides 2-hour weekday peak service headway.
- **Route 64** serves High County, North Star Ranch, Hesperia High School, Hesperia Junior High School, Hesperia Civic Center, Mojave High School, Sultana High School, and Hesperia Transfer Point. Route 64 provides 45 minutes to 1 hour and 15-minute weekday peak service headways.
- **Route 68** serves Hesperia Transfer Point, Hesperia Civic Center, Hesperia High School, Super Target, and the Mall of Victor Valley. Route 68 provides 1-hour weekday peak service headways.

2.3 Pedestrian and Bicycle Facilities

The project site is located in a developing area of the City with limited pedestrian facilities in the immediate vicinity of the site. Sidewalks are generally provided along the Main Street corridor, east of US Hwy 395 where residential and commercial development has been constructed.

The City of Hesperia Non-motorized Transportation Plan[6] identifies proposed bicycle facilities in the area, along with bicycle facilities that have been completed since the 2010 General Plan. The closest City designated bicycle facility is a proposed Class I bicycle path along both sides of Main Street, east of the I-15 northbound on-ramp, located approximately 1.5-miles east of the project site. Additional bicycle facilities are identified in Figure 5.

[5] VVTA (Victor Valley Transit Authority). 2023. “System Map.” https://vvta.org/interactive-map/.
[6] City of Hesperia. 2018. City of Hesperia Non-Motorized Transportation Plan.

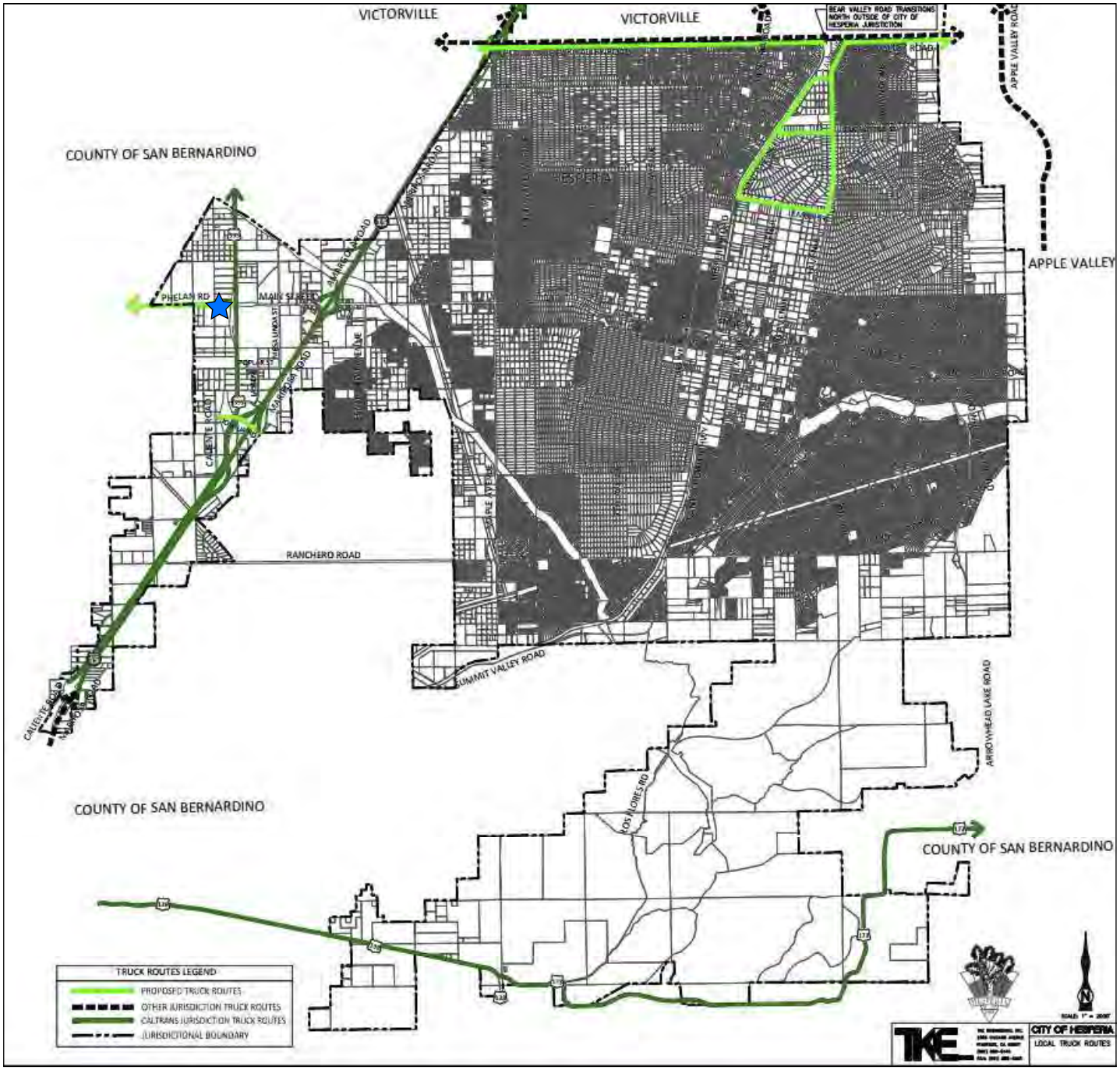

Legend

★ Project Location

SOURCE: City of Hesperia General Plan

FIGURE 3

City of Hesperia Local Truck Routes

Phelan 20 Industrial Project

DUDEK

NOT TO SCALE

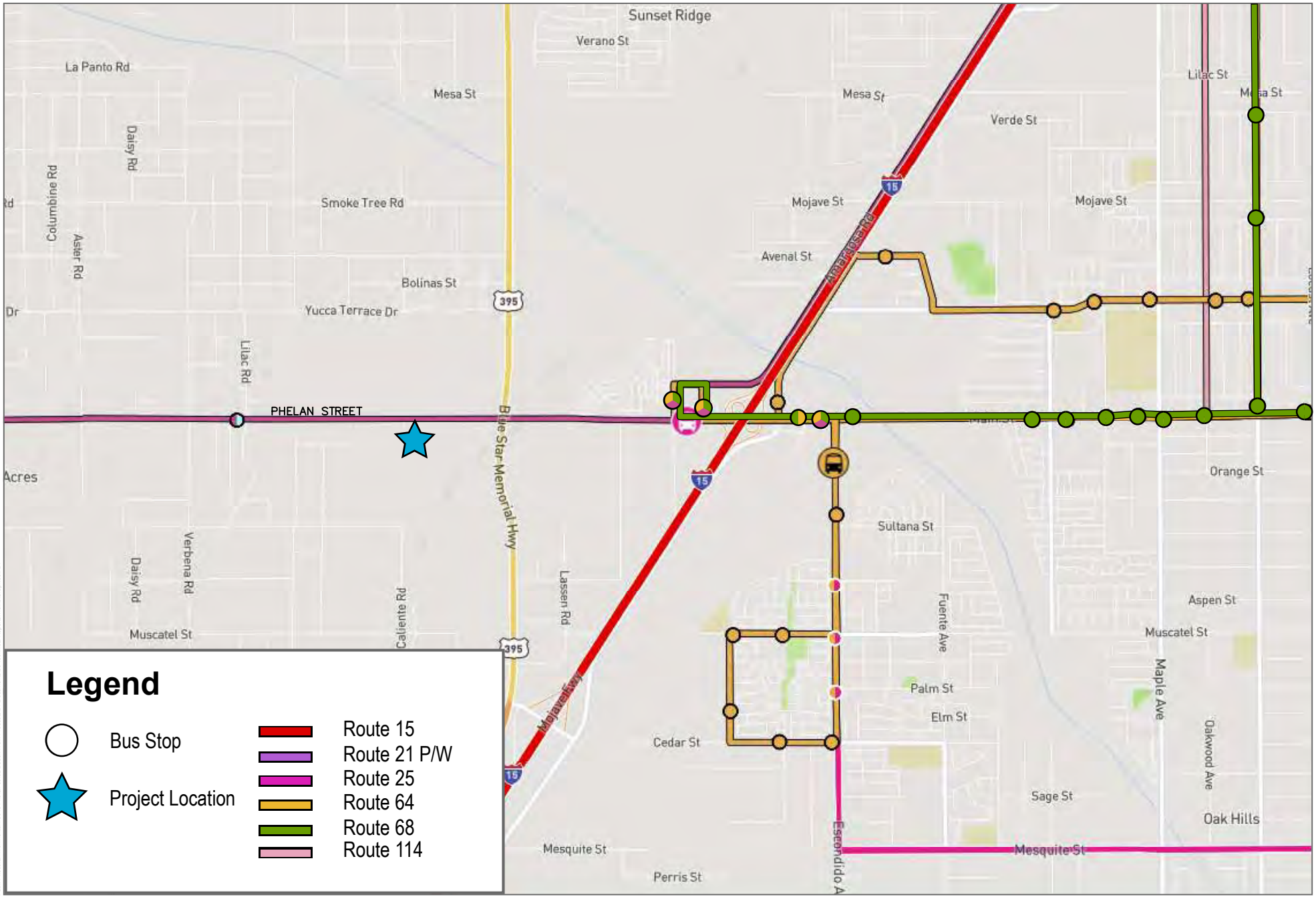

SOURCE: VVTA, 2024

DUDEK

NOT TO SCALE

FIGURE 4

Local Transit Routes

Phelan 20 Industrial Project

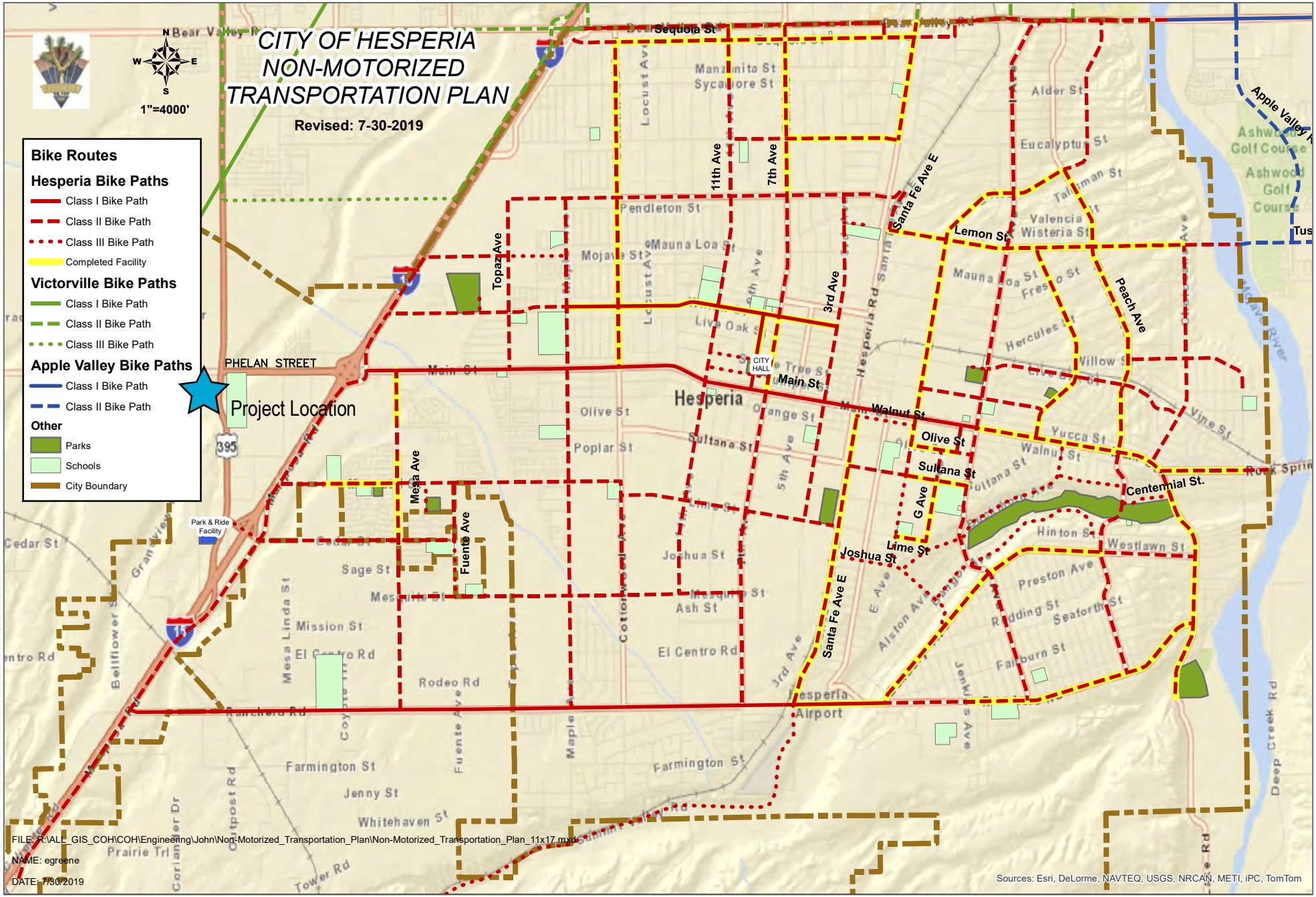

SOURCE: City of Hesperia General Plan, 2019

DUDEK

NOT TO SCALE

FIGURE 5

City of Hesperia Non-Motorized Transportation Plan

Phelan 20 Industrial Project

3.0 Project Trip Generation

The project trip generation rates, vehicle splits, and the resulting trip generation estimates for the project are summarized in Table 1. Trip generation estimates for the proposed project are based on daily and AM and PM peak hour trip generation rates obtained from the Institute of Transportation Engineers (ITE) Trip Generation Handbook, 11th Edition (2021). Additionally, Passenger car equivalent (PCE) factors were applied to the trip generation estimates to account for truck traffic. Based on the San Bernardino County Congestion Management Program (CMP) a 1.5 PCE factor was applied to 2-axle trucks, a 2.0 PCE was applied to 3-axle trucks, and a 3.0 PCE factor was applied to 4-axle trucks.

The layout of the building is most representative of a high-cube warehousing land use. However, as a specific end-user is not in place for the proposed project, a 35% General Light Industrial and 65% High-Cube Warehousing split of the total building square footage is applied to provide a conservative analysis. The General Light Industrial trip rate is approximately 5 times higher in the AM peak hour and 4 times higher in the PM peak hour than the High-Cube Fulfillment Center Warehouse trip rate. Thus, incorporation of the industrial trip rate split, in the event that a small portion of the building is converted to a more industrial-specific land use, increases the total trip generation estimate compared to a warehousing-only estimate, the expected sole land use of the facility. As such, the following vehicle-mix and land use assumptions provide a conservative analysis:

- General Light Industrial (ITE Code 110) trip rates were used to obtain trip generation estimates for 35% of the project, totaling approximately 146,895 SF. As the ITE Trip Generation Handbook does not provide information regarding the type of vehicle generated for light industrial uses, vehicle mixes data and percentages from the Fontana Truck Trip Generation Study[7] for Light Industrial land use are used.
- High-Cube Fulfillment Center Warehouse (ITE Code 155) trip rates were used to obtain trip generation estimates for 65% of the project, totaling approximately 272,805 SF. As the ITE Trip Generation Handbook does not provide a breakdown of truck traffic by axle classification, vehicle mix data and percentages are also applied to the project trip generation estimates from the 2014 SCAQMD Warehouse Truck Trip Study Data Results and Usage[8].

As shown in Table 1, the project would generate 745 daily trips, 151 AM peak hour trips, and 140 PM peak hour trips. This is equivalent to 1,115 daily PCEs, 205 AM peak hour PCEs, and 195 PM peak hour PCEs.

[7] City of Fontana. 2003. Truck Trip Generation Study.
[8] Southern California Air Quality Management District. 2014. SCAQMD High Cube Warehouse Truck Trip Study White Paper Summary of Business Survey Results. June 2014.

Table 1. Project Trip Generation

Land Use	ITE Code	Size/Units	Daily	AM Peak Hour			PM Peak Hour		
				In	Out	Total	In	Out	Total
Trip Rates[1]									
General Light Industrial	110	TSF	1.71	0.65	0.09	0.74	0.09	0.56	0.65
High-Cube Fulfillment Center Warehouse	155	TSF	1.81	0.12	0.03	0.15	0.06	0.10	0.16
Trip Generation									
35% Building - General Light Industrial	110	146.895 TSF	251	96	13	109	13	82	96
65% Building - High-Cube FC Warehouse	155	272.805 TSF	494	33	8	41	17	27	44
Phelan 60 Industrial Project Total		**419.700**	**745**	**129**	**21**	**150**	**30**	**109**	**140**
Trip Generation Summary (Non-PCE, by Vehicle Classification)									
General Light Industrial - 35% of Building									
Vehicle Mix	**%[2]**								
Passenger Vehicles	78.6%		197	75	10	86	11	65	75
2-Axle Trucks	8.0%		20	8	2	9	1	7	8
3-Axle Trucks	3.9%		10	4	1	5	1	4	4
4+-Axle Trucks	9.5%		24	9	1	10	1	8	9
General Light Industrial Total (Non-PCE)			**251**	**96**	**14**	**110**	**13**	**83**	**96**
High-Cube Fulfillment Center Warehouse - 65% of Building									
Vehicle Mix	**%[3]**								
Passenger Vehicles	55.3%		273	18	4	23	9	15	24
2-Axle Trucks	15.5%		77	5	1	6	3	4	7
3-Axle Trucks	4.9%		24	2	0	2	1	1	2
4+-Axle Trucks	24.3%		120	8	2	10	4	6	11
High-Cube Fulfillment Center Total (Non-PCE)			**494**	**33**	**8**	**41**	**17**	**27**	**44**
Building Total			**745**	**129**	**22**	**151**	**30**	**110**	**140**
Total by Vehicle Classification									
Passenger Vehicles			470	94	15	108	20	79	100

Table 1. Project Trip Generation

Land Use	ITE Code	Size/Units	Daily	AM Peak Hour			PM Peak Hour		
				In	Out	Total	In	Out	Total
Trucks			274	36	7	42	10	30	40
Total Trip Generation (Non-PCE)			**745**	**129**	**22**	**151**	**30**	**110**	**140**
Trip Generation Summary (PCE, by Vehicle Classification)									
Vehicle Mix	**PCE[4]**								
Passenger Vehicles	1.0		470	94	15	108	20	79	100
2-Axle Trucks	1.5		145	20	5	24	6	16	22
3-Axle Trucks	2.0		68	11	2	12	3	11	14
4+-Axle Trucks	3.0		432	51	9	61	16	43	59
Building Total (PCE)			**1,115**	**175**	**31**	**205**	**45**	**149**	**194**
Total by Vehicle Classification									
Passenger Vehicles			470	94	15	108	20	79	100
Trucks			644	82	16	97	24	69	95
Total Trip Generation (PCE)			**1,115**	**175**	**31**	**205**	**44**	**149**	**195**

Notes: Rounding discrepancies may occur. TSF = Thousand Square Feet; PCE = Passenger Car Equivalent

1 Trip rates from the Institute of Transportation Engineers (ITE), *Trip Generation, 11th Edition, 2021.*

2 Vehicle Mix and Percent from the Fontana Truck Trip Generation Study, August, 2004.

3 Vehicle Mix and Percent from the SCAQMD Warehouse Truck Trip Study Data Results and Usage, July 17, 2014.

4 Passenger Car Equivalent (PCE) factors from the San Bernardino County CMP, Appendix B - Guidelines for CMP Traffic Impact Analysis Reports in San Bernardino County, 2016

4.0 City of Hesperia Level of Service Thresholds

Per the City's Traffic Impact Analysis (TIA) Guidelines, a LOS analysis would be required for projects that generate over 250 peak hour trips. As shown in Table 1, the project would generate 151 AM peak hour trips (205 AM PCEs) and 140 PM peak hour trips (195 PM PCEs). As such, a LOS analysis is not required.

5.0 Access, Circulation, and Safety

The Project site is located within the US Hwy 395/I-15 District of the Main Street and Freeway Corridor Specific Plan (MSFCSP). According to the Specific Plan, the Hwy 395/I-15 District is intended to provide enhanced vehicular, truck, and rail accessibility for commercial/industrial business park uses by taking advantage of its location along the I-15 corridor with its connection to US Hwy 395, and its linkage to the Southern California Logistics Airport, a major logistics hub, located approximately 13 miles north of the Project site via US Hwy 395 in the City of Victorville. Per the MSFCSP, the recommended district land uses build upon the presence of a major truck stop and other existing and planned light industrial uses. The purpose of this district is to create employment-generating uses in a business park setting. The kind of industrial uses envisioned in this District include light industrial, light manufacturing, and industrial support uses, mainly conducted in enclosed buildings, with minimal environmental impacts. The Project is consistent with these types of uses.

Site Access

Access to the Project site would be provided by three driveways (see Figure 6, Vehicular Circulation Plan):

- **Driveway #1: Phelan Road North Driveway** – 30-foot-wide, right-in right out (passenger cars only) driveway with stop sign
- **Driveway #2: New Caliente Street East Driveway** – 45-foot-wide, full-access (passenger cars and trucks) driveway with stop sign
- **Driveway #3: New Caliente Street Southeast Driveway** – 30-foot-wide, full-access (passenger cars and trucks) driveway with stop sign

Consistent with Hesperia Fire Department access requirements, all Project driveways have been designed to allow for minimum turning radii. Signage and striping would be provided to demarcate fire lanes and clear spaces throughout the site. All gated entryways to truck courts would include rapid-access Knox boxes to provide emergency access to gated areas.

Truck Routes

Main Street east of US Hwy 395 is no longer designated as a City truck route; therefore, all Project truck traffic traveling to and from I-15 will be routed on US Hwy 395 to the Joshua Street interchange.

Proposed Site Access Improvements

The Project would include improvements along Phelan Road, including frontage landscaping and pedestrian improvements. All roadway improvements required as part of the Project, whether located on or off site, would be designed and constructed in accordance with all applicable local, state, and federal roadway standards and practices. As the Project continues through design review, detailed roadway improvements will continue to be developed in coordination with the City.

The design of the proposed project, including all egress/ingress and driveways would be designed according to all relevant City guidelines and would be reviewed by the City's Public Works/Engineering Department. All driveways would be required to have adequate queue storage areas, would be perpendicular to existing roads, and would not cause hazards due to a geometric design feature.

Pedestrian Access and Bicycle Access

The Project would construct pedestrian facilities (e.g., curb and gutter) along all Project frontages, including on Phelan Road and Caliente Road. Additionally, as the adjacent areas surrounding the Project site continue to become developed, connectivity to other areas of the City will be realized.

Emergency Access

All roadway, intersection and Project access improvements would be overseen by the applicable lead agency and their qualified traffic engineers. This approach would ensure compliance with all applicable roadway design requirements. In the event of an emergency all the site access driveways would enable vehicles to enter/exit the Project site. All street improvements will be designed with adequate width, turning radius, and grade to facilitate access by City's firefighting apparatus, and to provide alternative emergency ingress and egress. The site plan would be subject to plan review by the City's Fire Department to ensure proper access for fire and emergency response is provided and required fire suppression features are included. Therefore, the Project's impact due to inadequate emergency access would be less than significant. As such, no hazardous design features would be part of the Project's roadway improvements or site access.

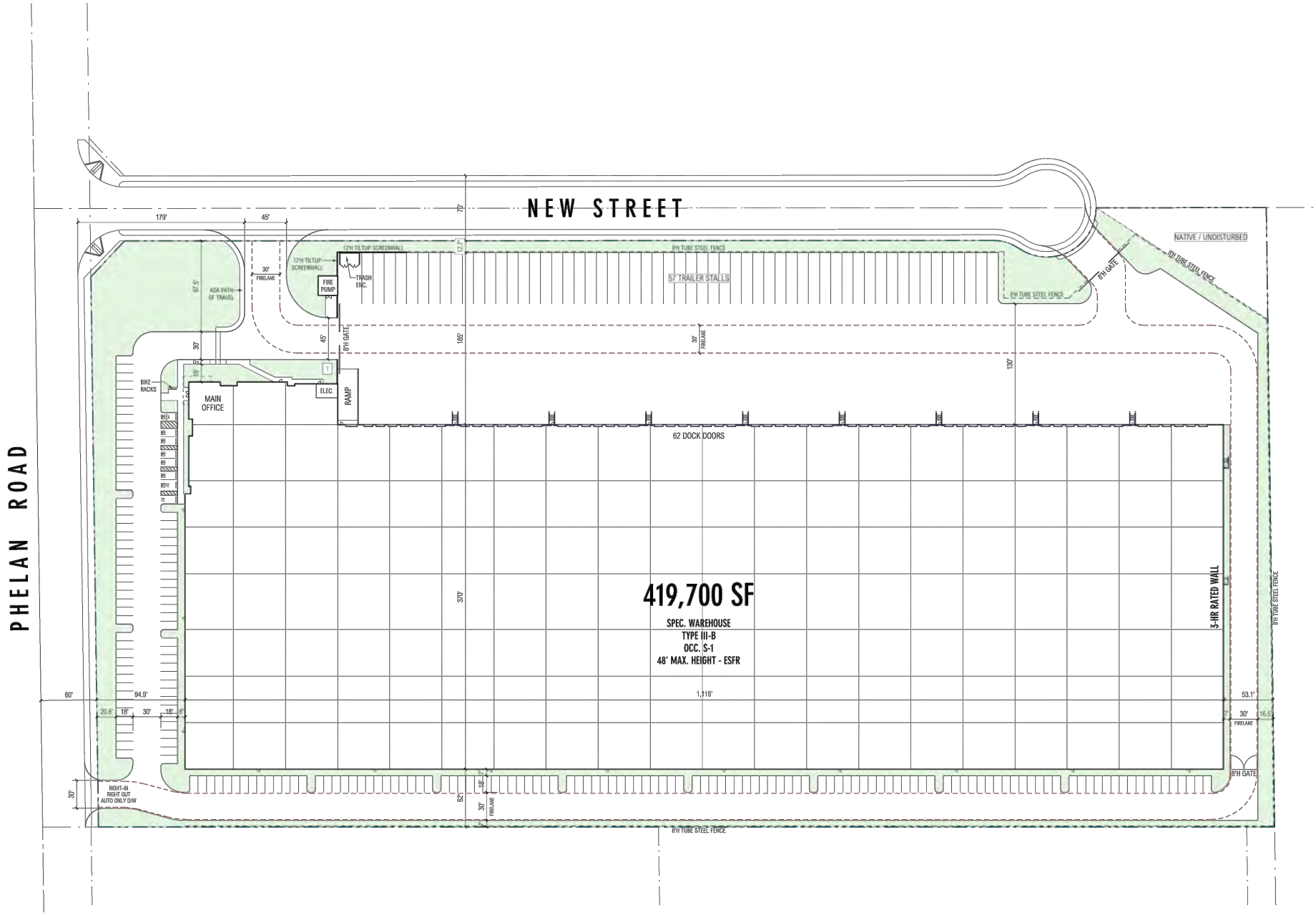

SOURCE: RGA 2023

Figure 6

Vehicle Circulation Access

Phelan 20 Industrial

DUDEK

NOT TO SCALE

Jul 11, 2024 - 10:59am tmathews P:\300 Environmental\15043 Phelan 60\02 Dudek Work Products\01 Documents\03 Technical Reports\Traffic\Graphics\15043_TRAF.dwg Layout: Fig6-Vehicle Circulation

6.0 Vehicle Miles Traveled

The California Environmental Quality Act (CEQA) requires all lead agencies to adopt VMT as the measure for identifying transportation impacts for land use projects. To comply with CEQA, the City of Hesperia adopted analytical procedures, screening tools, and impact thresholds for VMT, which are documented in their adopted City of Hesperia Transportation Impact Analyses Guidelines for Vehicle Miles Traveled And Level of Service Assessment The adopted City Guidelines have been used to prepare this analysis.

6.1 VMT Screening Analysis

The City's Guidelines provides details on appropriate "screening thresholds" that can be used to identify when a proposed land use project is anticipated to result in a less-than-significant impact without conducting a more detailed analysis. A land use project need only to meet one of the below screening thresholds to result in a less-than- significant impact.

- **TPA Screening:** Consistent with guidance identified in the Technical Advisory and City's Guidelines, projects located within a Transit Priority Area (TPA) (e.g., within ½ mile of an existing "major transit stop" or an existing stop along a "high-quality transit corridor") may be presumed to have a less than significant impact absent substantial evidence to the contrary. The Project site is not located within ½ mile of an existing major transit stop, or along a high-quality transit corridor.
- **Low VMT Area Screening:** Residential and office projects that locate in areas with low VMT and that incorporate similar features (density, mix of uses, and transit accessibility) will tend to exhibit similarly low VMT. The Screening Tool uses the sub-regional SBTAM to measure VMT performance within individual TAZs within the region. The Project would not qualify as residing in a low VMT area.
- **Project-Type Screening:** The City's Guidelines states that projects that are consistent with the current Sustainable Communities Strategy (SCS) or general plan, and that generate fewer than 110 daily vehicle trips be presumed to have a less-than-significant impact on VMT. The Project would generate 745 daily vehicle trips (1,115 passenger car equivalents) and would not be eligible to screen out based on project type screening.

The proposed Project does not meet any of the screening criteria listed above. The Project does not generate less than 110 daily trips (as shown in Table 1) and is an industrial project that would not be considered a locally serving retail use and does not include affordable housing. The Project is also not located in a low VMT area as identified on the City's VMT maps or is it within a half-mile mile of an existing major transit stop, or along a high-quality transit corridor. Therefore, a project-level VMT analysis is required and is presented below.

6.2 VMT Analysis

VMT Modeling

The City Guidelines identifies the SBTAM as the appropriate tool for conducting VMT analysis for land use projects in the City of Victorville, as it considers interaction between different land uses based on socio-economic data, such as population, households, and employment. The SBTAM model assumes datasets consistent with the 2016

Southern California Association of Governments (SCAG) Regional Transportation Plan and Sustainable Communities Strategy (RTP/SCS).

VMT Metric and Significance Threshold

City Guidelines identifies VMT per service population as the transportation efficiency metric to be compared to the County of San Bernardino VMT average. A project would result in a significant project-generated VMT impact if either of the following conditions are satisfied:

1. The baseline project generated VMT per service population exceeds the San Bernardino County regional average baseline VMT per service population, or
2. The cumulative project generated VMT per service population exceeds the San Bernardino County regional average baseline VMT per service population.

Based on VMT data previously published by the San Bernardino County Transportation Authority (SBCTA) for each of its member agencies and the San Bernardino County region, the County of San Bernardino regional average baseline VMT per service population is 32.7.

Additionally, the project's effect on VMT would be considered significant if it results in the following condition to be satisfied:

1. The baseline link-level boundary (County of San Bernardino) VMT per service population increases under the plus project condition compared to the no project condition, or
2. The cumulative link-level boundary (County of San Bernardino) VMT per service population increases under the plus project condition compared to the no project condition.

VMT Approach

The Office of Planning and Research (OPR) *Technical Advisory on Evaluating Transportation Impacts in CEQA*[9] provides technical assistance and recommendations for the analysis of VMT. The methodology recommendations for the VMT analysis include a discussion on vehicle types. An excerpt from the OPR Technical Advisory regarding vehicle types is below:

> Vehicle Types. Proposed Section 15064.3, subdivision (a), states, "For the purposes of this section, 'vehicle miles traveled' refers to the amount and distance of automobile travel attributable to a project." Here, the term "automobile" refers to on-road passenger vehicles, specifically cars and light trucks. Heavy-duty truck VMT could be included for modeling convenience and ease of calculation (for example, where models or data provide combined auto and heavy truck VMT). For an apples-to-apples comparison, vehicle types considered should be consistent across project assessment, significance thresholds, and mitigation.

Per Section 21099 of the Public Resource Code, the selection of the VMT criteria for determining the significance of transportation impacts was intended to promote reductions of greenhouse gas emissions (GHG); to develop multimodal transportation networks; and to diversify land uses. As mentioned in the OPR's Technical Advisory, there

[9] OPR (California Governor's Office of Planning and Research). 2018. Technical Advisory on Evaluating Transportation Impacts in CEQA. December 2018. Accessed February 2021. http://opr.ca.gov/docs/20190122-743_Technical_Advisory.pdf.

are various legislative mandates and state policies that establish quantitative GHG emission reduction targets. Pursuant to Senate Bill 375, the California Air Resources Board GHG emissions reduction targets for metropolitan planning organizations (MPOs) call for reductions in GHG emissions only from cars and light trucks. Therefore, a custom model run using the SBTAM was conducted to estimate VMT from automobiles (i.e., cars and light trucks) only, and the Project's VMT and the threshold VMT were extracted only for automobile VMT. This allows for an apples-to apples comparisons of VMT generated by vehicle types across project assessment, significance thresholds, and mitigation (if any). While the abovementioned OPR Technical Advisory allows for heavy duty truck VMT to be included in modeling, it is important to note that this allowance was provided for modeling convenience and ease of calculation; however, in keeping with the intent of Section 21099 of the Public Resource Code and Section 15064.3, subdivision (a) of the CEQA Guidelines (which specify that automobile VMT is the primary metric that should be evaluated), the extra step of removing heavy truck VMT from SBTAM was undertaken to provide for a project level analysis that most appropriately meets the intent of SB 743. Additionally, as noted during an informational question and answer session conducted by OPR to provide information and guidance on conducting project-level VMT analysis (OPR 2020), it is automobile VMT (i.e., cars and light duty trucks) that needs to be quantified for all land uses, including warehouses. Therefore, a custom model run using the SBTAM was conducted to estimate VMT from automobiles (i.e., cars and light trucks) only, and the Project's VMT and the threshold VMT were extracted only for automobile VMT.

VMT Findings

The following section summarizes the VMT analysis findings.

Project Generated VMT

The Origin/Destination (OD) method for calculating VMT sums all weekday VMT generated by trips with at least one trip end in the study area (i.e., TAZ or group of TAZ's). The OD method accounts for all trips (i.e., both passenger car and truck) and trip purposes (i.e., total VMT) and therefore provides a more complete estimate of VMT. Total VMT is then divided by the Project's service population (population and employment) to derive the efficiency metric VMT per service population. Table 2 presents Project generated OD VMT and the resulting OD VMT per service population for both Baseline (2023) and Cumulative (2040) conditions. As shown in Table 2, the Project would generate OD VMT per service population above the City's adopted impact threshold for both baseline and cumulative conditions, which would result in a potentially significant VMT impact.

Table 2. Project Generated VMT

	Baseline	Cumulative
Service Population	351	351
Total OD VMT	17,506	18,897
OD VMT per Service Population	49.8	54.0
City Threshold	32.7	32.7
Potentially Significant?	Yes	Yes

Source: Urban Crossroads, 2023
Notes: OD = origin destination

Project Effect On VMT

The City Guidelines state that the VMT analysis should also contain an evaluation of a project's effect on VMT for projects not consistent with the RTP/SCS. Although the Project is consistent with the RTP/SCS for purposes of fully disclosing any potential VMT impacts, the cumulative effect on VMT was also evaluated, which was performed using the boundary method of calculating VMT. The boundary method is the sum of all weekday VMT on the roadway network and estimates VMT by multiplying vehicle trips on each roadway segment within the boundary by that segment's length within a designated boundary. This approach consists of all trips, including those trips that do not begin or end in the designated boundary. In this case, consistent with the City Guidelines the County of San Bernardino boundary was used. Table 3 presents total VMT calculated using the boundary method for cumulative no project and plus project conditions.

Table 3. Boundary VMT

	Baseline		Cumulative	
	No Project	With Project	No Project	With Project
Service Population	2,930,939	2,931,290	3,749,647	3,749,998
Boundary VMT	57,687,745	57,684,081	87,716,504	87,739,843
VMT per Service Population	19.7	19.7	23.4	23.4
Change in VMT per Service Population	0.0		0.0	
Potentially Significant?	No		No	

Source: Urban Crossroads, 2023

As shown in Table 3, the boundary VMT per service population remains unchanged under With Project scenario as compared to the no project scenario resulting in a cumulative effect on VMT impact that is less than significant.

Potential VMT Reduction Strategies

Project generated VMT per service population would exceed the City's impact threshold for both baseline and cumulative conditions. The Project would be required to reduce its VMT impact by 39.5%3 to achieve a less than significant finding. For the purposes of this analysis, the following project design features have the potential to reduce commute VMT, although no quantified benefit is taken at this time.

- Provide designated carpool/vanpool parking in desirable locations to encourage employees to carpool/vanpool to work that can lead to reduced commute VMT depending on the level of participation by tenants.
- Provide end-of-trip facilities such as bicycle parking, lockers, etc., which could encourage employees to use alternative modes of transportation and thus reduce VMT.
- Provide sidewalks along Project frontage providing connections to existing trails and external pedestrian networks in order to improve pedestrian access. This measure could encourage employees to walk to nearby destinations and thus reduce VMT. Although the Project includes design features that are intended to reduce VMT, even with the inclusion of these VMT reducing features the Project is not expected to reduce its VMT impact below the City's adopted impact threshold and the Project is determined to have a significant impact and unavoidable impact.

6.3 Supplemental Truck VMT Analysis

While not required by CEQA, a supplemental VMT evaluation measuring project generated total VMT and total VMT per Service Population was conducted to fully disclose potential VMT impacts resulting from both automobiles and trucks. For purposes of this analysis, total VMT has been estimated from vehicle trip generation rates (per Table 1) and average trip length for each vehicle type. Average trip length information was obtained from the SBTAM for passenger cars and StreetLight™ Data's Truck Volume Metrics for medium heavy-duty trucks (MDT) (2 and 3 axle trucks) and heavy heavy-duty trucks (HDT) (4+ axle trucks). Detailed information on the methodology can be found in Attachment E of this Memo.

Table 4 presents an estimation of total VMT for the Project, which uses vehicle trip generation multiplied by the average trip length for each vehicle type.

Table 4. Total Project VMT

Vehicle Type	Vehicle Trips	Vehicle Trip Length	VMT
Automobile	470	12.6	5,922
Total Truck	274	62.1	17,015
Total	744	—	22,937

Source: Urban Crossroads, 2023; Attachment E

Table 5 presents the calculation of the efficiency metric total VMT per Service Population, which is the product of total VMT generated by the Project divided by its Service Population (employment). The table identifies a comparison between the Project's total VMT per Service Population to the City's adopted impact threshold.

Table 5. Total Project VMT per Service Population

	Project
Service Population	351
Total VMT	22,937
VMT per Service Population	65.3
Threshold	32.7
VMT Exceeds Threshold	Yes

As presented in Table 5, when accounting for both passenger vehicles and trucks, the Project is forecast to generate total VMT per Service Population of 65.3, which would exceed the City's VMT impact threshold.

7.0 Summary

The key findings of the transportation analysis in this memo are summarized below:

- The proposed project would generate 745 daily trips, 151 AM peak hour trips, and 140 PM peak hour trips. This is equivalent to 1,115 daily PCEs, 205 AM peak hour PCEs, and 195 PM peak hour PCEs.
- The project generates less than 250 peak hour trips, therefore a level of service analysis is not required per the City's TIA Guidelines.
- The Project would have no impact on the transit, pedestrian and bicycle facilities in the area.
- The Project was evaluated against VMT screening criteria as outlined in the City Guidelines. The Project was not found to meet any available screening criteria, and a VMT analysis was performed.
- Project generated VMT was estimated for baseline and cumulative conditions and found to exceed the City's impact threshold under both scenarios resulting in a potentially significant impact.
- Project effect on VMT was evaluated for both baseline and cumulative conditions and found to not exceed the City's impact threshold for either scenario resulting in a less than significant impact.
- Even with the implementation of VMT reducing project design features, the Project would not be able to reduce its VMT impact to less than significant; the Project's VMT impact is considered significant and unavoidable.

Attachment A

Urban Crossroads VMT Analysis

MEMORANDUM

URBAN CROSSROADS

DATE: September 27, 2023
TO: Lisa Valdez, Dudek
FROM: Alex So, Urban Crossroads, Inc.
JOB NO: 14936-01 VMT

PHELAN 20 INDUSTRIAL VEHICLE MILES TRAVELED (VMT) ANALYSIS

Urban Crossroads, Inc. is pleased to provide the following Vehicle Miles Traveled (VMT) Analysis for Phelan 20 Industrial (**Project**), which is located on Phelan Road, west of Highway 395 and east of Los Banos Ave, in the City of Hesperia.

PROJECT OVERVIEW

It is our understanding that the Project includes the construction of a speculative industrial warehouse totaling 419,700 square feet and associated improvements, including loading docks, truck and vehicle parking, and landscaped areas. The site plan is provided in Attachment A.

BACKGROUND

The California Environmental Quality Act (CEQA) requires all lead agencies to adopt VMT as the measure for identifying transportation impacts for land use projects. To comply with CEQA, the City of Hesperia adopted analytical procedures, screening tools, and impact thresholds for VMT, which are documented in their adopted City of Hesperia Transportation Impact Analyses Guidelines for Vehicle Miles Traveled And Level of Service Assessment (July 2020) (**City Guidelines**) (1). The adopted City Guidelines have been used to prepare this analysis.

VMT SCREENING

City Guidelines identifies that a project may be determined to have a non-significant transportation impact if it meets one or more VMT screening criteria. Each of the screening criteria listed in the City Guidelines are described in Table 1 along with a determination of the Project's eligibility to meet each criterion.

TABLE 1: SCREENING FOR LAND USE PROJECTS EXEMPT FROM VMT ANALYSIS

Screening Steps	Description	Result
1. Transit Priority (TPA) Screening	Projects located within a TPA (i.e., within a half mile of an existing major transit stop or an existing stop along a high-quality transit corridor) are presumed to have a less than significant impact on VMT.	Does not meet.
2. Low VMT Area Screening	Projects located within a low VMT generating zone that can reasonably be expected to generate VMT per resident, per worker, or per service population that is similar to the existing land uses in the low VMT area are presumed to have a less than significant impact on VMT. A low VMT area is defined as an individual traffic analysis zone (TAZ) where total daily Origin/Destination VMT per service population is lower than the City average total daily Origin/Destination VMT per service population.	Does not meet.
3. Project Type Screening	Local-Serving Retail under 50,000 square feet, Local Essential Services, and projects generating less than 110 daily vehicle trips are presumed to have a less than significant impact on VMT.	Does not meet.

As shown in Table 1, the Project was not found to meet eligible screening criteria and consistent with the City Guidelines a project level VMT analysis has been prepared.

VMT ANALYSIS

VMT MODELING

The City Guidelines identifies the SBTAM as the appropriate tool for conducting VMT analysis for land use projects in the City of San Bernardino, as it considers interaction between different land uses based on socio-economic data, such as population, households, and employment. The SBTAM model assumes datasets consistent with the 2016 Southern California Association of Governments (SCAG) Regional Transportation Plan and Sustainable Communities Strategy (RTP/SCS).

VMT METRIC AND SIGNIFICANCE THRESHOLD

City Guidelines note that the VMT analysis should include 'project generated VMT' and 'project effect on VMT' estimates for the Project TAZ under the following traffic scenarios:

- Baseline conditions
- Baseline plus project
- Cumulative no project
- Cumulative plus project

City Guidelines identifies **VMT per service population** as the transportation efficiency metric to be compared to the **County of San Bernardino VMT average**. More specifically, City Guidelines identifies the following impact thresholds for project level VMT analyses:

1. The baseline project generated VMT per service population exceeds the **San Bernardino County regional average** baseline VMT per service population, or

2. The cumulative project generated VMT per service population **exceeds the San Bernardino County regional average baseline** VMT per service population.

The project's effect on VMT would be considered significant if it resulted in the following conditions:

1. The baseline link-level boundary (County of San Bernardino) VMT per service population increases under the plus project condition compared to the no project condition, or
2. The cumulative link-level boundary (County of San Bernardino) VMT per service population increases under the plus project condition compared to the no project condition.

Based on VMT data previously published by the San Bernardino County Transportation Authority (SBCTA) for each of its member agencies and the San Bernardino County region, the County of San Bernardino regional average baseline VMT per service population is **32.7**.

PROJECT LAND USE CONVERSION

In order to evaluate Project generated VMT, standard land use information such as building size must first be converted into a SBTAM compatible dataset. The SBTAM model utilizes socio-economic data (SED) (e.g., employees) for the purposes of vehicle trip estimation. Table 2 presents the SED inputs used to represent the Project in SBTAM.

TABLE 2: EMPLOYMENT ESTIMATES

Land Use	Building Area	Conversion Factor[1]	Estimated Employees
Warehouse	419,700 SF	1,195 SF per Employee	351

PROJECT VMT ESTIMATES

PROJECT GENERATED VMT

The Origin/Destination (**OD**) method for calculating VMT sums all weekday VMT generated by trips with at least one trip end in the study area (i.e., TAZ or group of TAZ's). The OD method accounts for all trips (i.e., both passenger car and truck) and trip purposes (i.e., total VMT) and therefore provides a more complete estimate of VMT. Total VMT is then divided by the Project's service population (population and employment) to derive the efficiency metric VMT per service population.

Table 3 presents Project generated OD VMT and the resulting OD VMT per service population for both Baseline (2023) and Cumulative (2040) conditions. As shown in Table 3, the Project would generate OD VMT per service population above the City's adopted impact threshold for both baseline and cumulative conditions, which would result in a potentially significant VMT impact.

[1] SCAG Employment Density Study; Table II-B

TABLE 3: PROJECT VMT PER SERVICE POPULATION

	Baseline	Cumulative
Service Population[2]	351	351
OD VMT	17,506	18,974
OD VMT per Service Population	49.8	54.0
City Threshold	32.7	32.7
Potentially Significant?	Yes	Yes

PROJECT EFFECT ON VMT

The City Guidelines state that the VMT analysis should also contain an evaluation of a project's effect on VMT for projects not consistent with the RTP/SCS. Although the Project is consistent with the RTP/SCS for purposes of fully disclosing any potential VMT impacts, the cumulative effect on VMT was also evaluated, which was performed using the boundary method of calculating VMT.

The boundary method is the sum of all weekday VMT on the roadway network and estimates VMT by multiplying vehicle trips on each roadway segment within the boundary by that segment's length within a designated boundary. This approach consists of all trips, including those trips that do not begin or end in the designated boundary. In this case, the consistent with the City Guidelines the County of San Bernardino boundary was used.

Table 4 presents total VMT calculated using the boundary method for cumulative no project and plus project conditions. As expected, the boundary VMT per service population remains unchanged under With Project scenario as compared to the no project scenario resulting in a cumulative effect on VMT impact that is less than significant.

TABLE 4: CUMULATIVE BOUNDARY VMT RESULTS

	Baseline		Cumulative	
Scenario	No Project	With Project	No Project	With Project
Service Population	2,930,939	2,931,290	3,749,647	3,749,998
Boundary VMT	57,687,745	57,684,081	87,716,504	87,739,843
VMT per Service Population	19.7	19.7	23.4	23.4
Change in VMT per Service Population	0.0		0.0	
Potentially Significant?	No		No	

POTENTIAL VMT REDUCTION STRATEGIES

Project generated VMT per service population would exceed the City's impact threshold for both baseline and cumulative conditions. The Project would be required to reduce its VMT impact by 39.5%[3] to achieve a less than significant finding. For the purposes of this analysis, the following project design features have the potential to reduce commute VMT, although no quantified benefit is taken at this time:

[2] For the purposes of this analysis service population refers to Project employees.

[3] $(18{,}974_{\text{Project VMT}} - (32.7*351)_{\text{Threhold VMT}}) / 18{,}974_{\text{Project VMT}} \times 100 = 39.5\%$

- Provide designated carpool/vanpool parking in desirable locations to encourage employees to carpool/vanpool to work that can lead to reduced commute VMT depending on the level of participation by tenants.
- Provide end-of-trip facilities such as bicycle parking, lockers, etc., which could encourage employees to use alternative modes of transportation and thus reduce VMT.
- Provide sidewalks along Project frontage providing connections to existing trails and external pedestrian networks in order to improve pedestrian access. This measure could encourage employees to walk to nearby destinations and thus reduce VMT.

Although the Project includes design features that are intended to reduce VMT, even with the inclusion of these VMT reducing features the Project is not expected to reduce its VMT impact below the City's adopted impact threshold and the Project is determined to have a significant impact and unavoidable impact.

SUMMARY

Based on the results of this analysis the following findings are made:

- The Project was evaluated against VMT screening criteria as outlined in the City Guidelines. The Project was not found to meet any available screening criteria, and a VMT analysis was performed.
- Project generated VMT was estimated for baseline and cumulative conditions and found to exceed the City's impact threshold under both scenarios resulting in a potentially significant impact.
- Project effect on VMT was evaluated for both baseline and cumulative conditions and found to not exceed the City's impact threshold for either scenario resulting in a less than significant impact.
- Even with the implementation of VMT reducing project design features, the Project would not be able to reduce its VMT impact to less than significant; the Project's VMT impact is considered significant and unavoidable.

If you have any questions, please contact me directly at aso@urbanxroads.com.

REFERENCES

1. **City of Hesperia.** *Traffic Impact Analysis Guidelines for Vehicle Miles Traveled (VMT) and Level of Service Assessment (LOS).* City of Hesperia : s.n., July 2020.

ATTCHMENT A

PRELIMINARY SITE PLAN

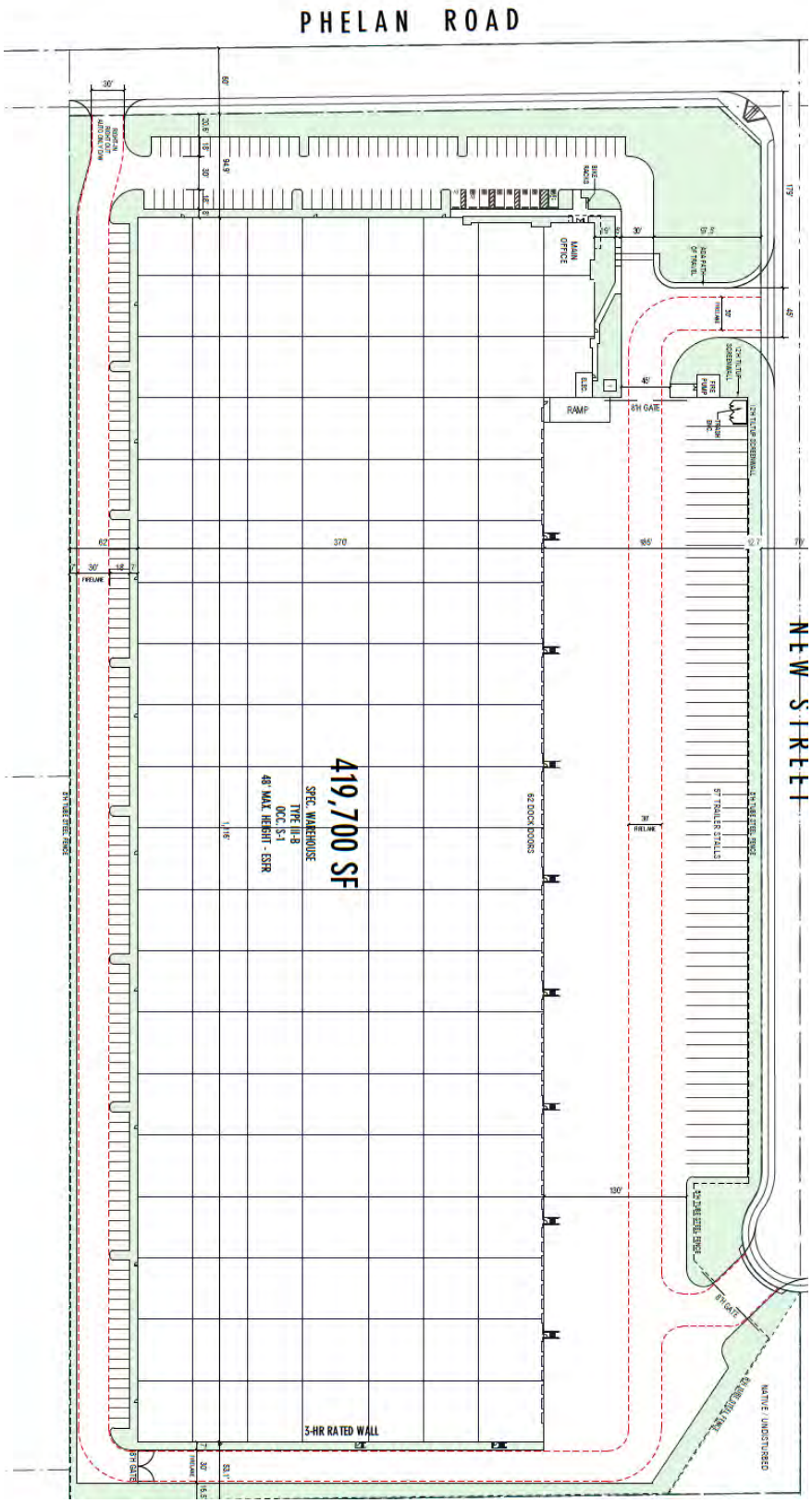
PHELAN ROAD
NEW STREET
419,700 SF
SPEC. WAREHOUSE
TYPE III-B
OCC. S-1
40 MAX. HEIGHT - ESR
62 DOCK DOORS
3-HR RATED WALL
MAIN OFFICE
RAMP
6H GATE
370'
130'
NATIVE / UNDISTURBED

MEMORANDUM

URBAN CROSSROADS

DATE: December 5, 2023
TO: Lisa Valdez, Dudek
FROM: Alex So, Urban Crossroads
JOB NO: 15702-02 Sup Truck VMT

PHELAN 20 INDUSTRIAL SUPPLEMENTAL VMT ANALYSIS

Urban Crossroads, Inc. is pleased to provide the following Supplemental VMT Analysis for the Phelan 20 Industrial (**Project**), which is located on Phelan Road, west of Highway 395 and east of Los Banos Ave, in the City of Hesperia.

PROJECT OVERVIEW

It is our understanding that the project is to consist of the construction of a 419,700 square foot industrial warehouse building.

SUPPLEMENTAL VMT EVALUATION

In an effort to fully disclose potential VMT impacts, this memorandum includes a supplemental VMT evaluation measuring project generated total VMT and total VMT per Service Population (VMT per SP). For purposes of this analysis, total VMT has been estimated from vehicle trip generation rates (see Attachment A) consistent with the Project's traffic study, and average trip length for each vehicle type. Average trip length information has been obtained from the San Bernardino Traffic Analysis Model (SBTAM) for passenger cars and StreetLight™ Data's Truck Volume Metrics for medium heavy-duty trucks (MDT) (2 and 3 axle trucks) and heavy heavy-duty trucks (HDT) (4+ axle trucks).

ABOUT STREETLIGHT™ DATA[1]

StreetLight™ Data's Truck Volume Metrics rely on five linked machine-learning models to estimate vehicle volume and trip length for various vehicle classes and total vehicles. These metrics cover data from 2019 through 2021. To provide volume estimates over different time periods, StreetLight™ Data utilizes the Monthly Average Daily Trip (MADT) for the specific days or times needed for a given analysis.In the scaling process, StreetLight™ factors in the ratio between sample trip counts for specific hours, days, and trip counts for the entire month, using MADT

[1] SteetLight Insight Truck Volume Methodology and Validation (September 2022).

for that zone. The estimated truck volume is validated by comparing it to actual volume data obtained from permanent traffic counters, sourced from the Federal Highway Administration's (FHWA) Travel Monitoring Analysis System (TMAS) CLS dataset. This dataset includes traffic counts from over 3,000 unique sites, spanning from January 2019 through December 2021.

SURVEY AREA

Truck travel characteristics were obtained from an existing industrial area near the proposed Project near the I-15 Freeway. This area was chosen due to its proximity to the Project and anticipated operational similarities. The data for this survey includes information on Medium Heavy-Duty Trucks (MDT) and Heavy Heavy-Duty Trucks (HDT) that either originated, ended, or passed through the surveyed area during the most recent consecutive 12-month period available from StreetLight™ Data for truck travel volume metrics. Exhibit 1 shows the surveyed location.

EXHIBIT 1: SURVEYED LOCATION

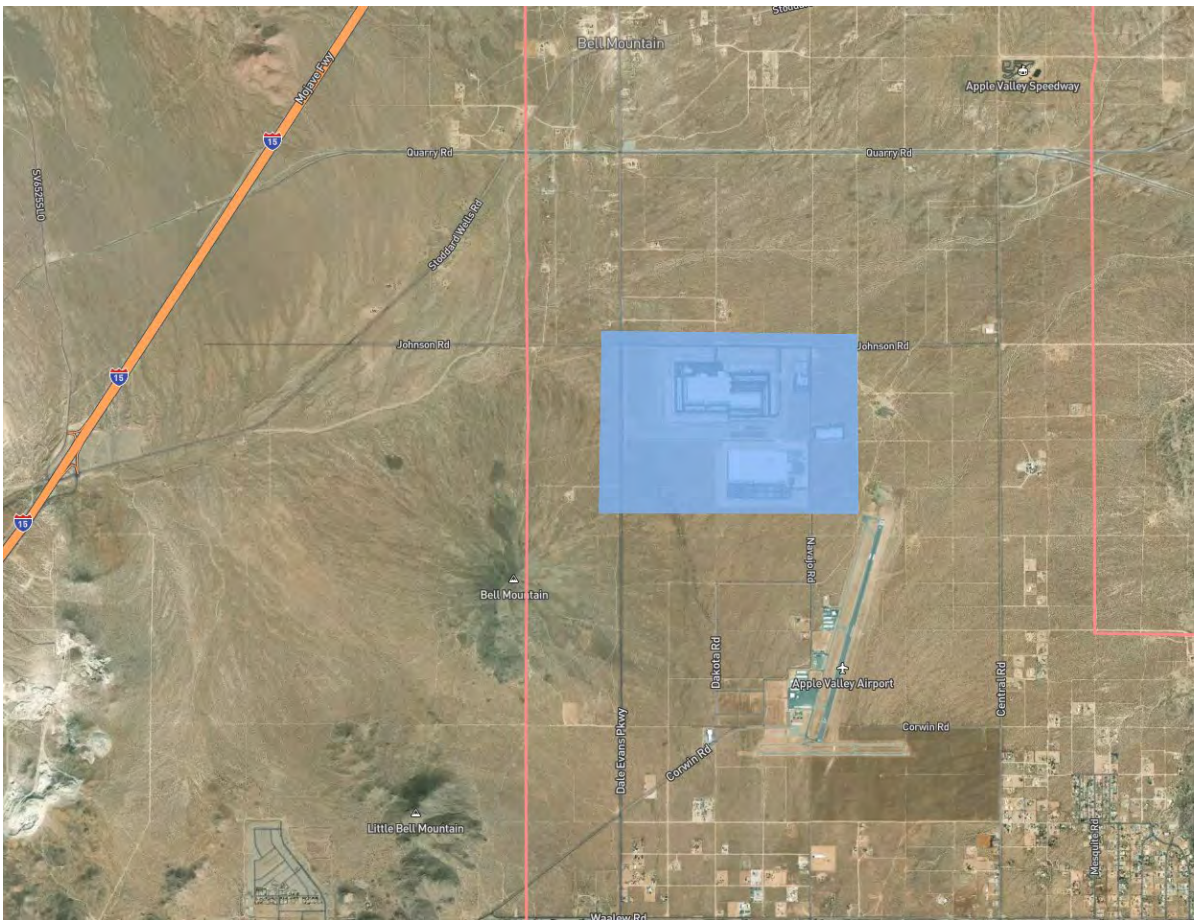

TRUCK TRIP LENGTH

Utilizing the above parameters, average daily zone traffic[2] of MDT vs. HDT, average trip length by vehicle class, and distance bins[3] of per-trip length in miles was obtained from StreetLight Data. Total average trip length for MDT and HDT was calculated by multiplying the disaggregated data's average trip length with its' respective percentage of total aggregated trucks (effectively calculating a weighted mean using percentages as weights) and then summing the amounts.

TABLE 1: AVERAGE TRIP LENGTH BY VEHICLE TYPE

	MDT Avg Trip Length	MDT % of Total	HDT Avg Trip Length	HDT % of Total	Weighted Average Trip Length
Apple Valley	47.2	75.3%	105.8	24.7%	62.1

Based on traffic monitoring data collected for the most recent 12-month period of complete data available from StreetLight Data, the average trip length of MD and HD trucks has been calculated 62.1 miles.

TRUCK ACTIVITY BY AIR DISTRICT

Further review of the data StreetLight™ reveals the activity outside the Mojave Desert Air district the Truck activity. The truck activity by air district is presented in Table 2.

TABLE 2: ACTIVITY BY AIR DISTRICT

Air District	Truck Activity
Kern	14%
San Joaquin Valley Unified	6%
Antelope valley	1%
South Coast	72%

Note: The Remaining 7% of truck activity is related to trucks that remain in the Mojave Desert Air District.

PROJECT VMT ESTIMATES

Table 3 presents an estimation of total VMT for the Project, which utilizes vehicle trip generation rates consistent with the Project's traffic study multiplied by the average trip length for each vehicle type.

TABLE 3: PROJECT VMT

Vehicle Type	Vehicle Trips	Vehicle Trip Length	VMT
Automobile	470	12.6	5,922
Total Truck	274	62.1	17,015
Total	744	-	22,937

[2] Average daily zone traffic was then used to calculate % of total aggregated trucks for each disaggregate.
[3] Distance bins were defaulted to: 0-1, 1-2, 2-5, 5-10, 10-20, 20-30, 30-40, 40-50, 50-60, 60-70, 70-80, 80-90, 90-100, and 100+ in miles.

Table 4 presents the calculation of the efficiency metric total VMT per SP, which is the product of total VMT generated by the Project divided by its SP (employment). Table 3 identifies a comparison between the Project's total VMT per SP to the City's adopted impact threshold. As specified in the City of Hesperia Transportation Impact Analyses Guidelines for Vehicle Miles Traveled And Level of Service Assessment (July 2020) (**City Guidelines**) (1), **if the baseline project generated VMT per SP exceeds the San Bernardino County regional average baseline VMT per SP it would result in a significant impact**. City Guidelines identifies the San Bernardino County regional average VMT per service population as 32.7[4].

TABLE 4: VMT PER SP

	Project
SP	351
Total VMT	22,937
VMT per SP	65.3
Threshold	32.7
VMT Exceeds Threshold	Yes

As presented in Table 4, using the VMT calculation methodology previously described, the Project is forecast to generate total VMT per SP of 65.3, which would exceed the City's VMT impact threshold and result in a significant VMT impact.

If you have any questions, please contact me directly at aso@urbanxroads.com.

[4] City Guidelines; Page 28.

REFERENCES

1. **City of Hesperia.** *Traffic Impact Analysis Guidelines for Vehicle Miles Traveled (VMT) and Level of Service Assessment (LOS).* City of Hesperia : s.n., July 2020.

ATTACHMENT A

PROJECT TRIP GENERATION SUMMARY

Table 1 - Phelan 20 Industrial Project Trip Generation Summary (High-Cube Fulfillment Center & Warehousing)

Land Use	ITE Code	Size/Units	Daily	AM Peak Hour			PM Peak Hour		
				In	Out	Total	In	Out	Total
TRIP RATES [1]									
General Light Industrial	110	TSF	1.71	0.65	0.09	0.74	0.09	0.56	0.65
High-Cube Fulfillment Center Warehouse (non-sort)	155	TSF	1.81	0.12	0.03	0.15	0.06	0.10	0.16
TRIP GENERATION									
Phelan 60 Industrial Project Total	110	146.895 TSF	251	96	13	109	13	82	96
	155	272.805 TSF	494	33	8	41	17	27	44
	Project Total	*419.700 TSF*	*745*	*129*	*21*	*150*	*30*	*109*	*140*
TRIP GENERATION SUMMARY (Non-PCE, by Vehicle Classification)									
ITE 110- 35% split									
Vehicle Mix	% [2]								
Passenger Vehicles	78.6%		197	75	10	86	11	65	75
2-Axle Trucks	8.0%		20	8	2	9	1	7	8
3-Axle Trucks	3.9%		10	4	1	5	1	4	4
4+-Axle Trucks	9.5%		24	9	1	10	1	8	9
	ITE 110 Total (Non-PCE)		*251*	*96*	*14*	*110*	*13*	*83*	*96*
ITE 155- 65% split									
Vehicle Mix	% [3]								
Passenger Vehicles	55.3%		273	18	4	23	9	15	24
2-Axle Trucks	15.5%		77	5	1	6	3	4	7
3-Axle Trucks	4.9%		24	2	0	2	1	1	2
4+-Axle Trucks	24.3%		120	8	2	10	4	6	11
	ITE 155 Total (Non-PCE)		*494*	*33*	*8*	*41*	*17*	*27*	*44*
	Building Total		*745*	*129*	*22*	*151*	*30*	*110*	*140*
Total by Vehicle Classification									
	Passenger Vehicles		470	94	15	108	20	79	100
	Trucks		274	36	7	42	10	30	40
	Total Trip Generation (Non-PCE)		745	129	22	151	30	110	140
TRIP GENERATION SUMMARY (PCE, by Vehicle Classification)									
Vehicle Mix	PCE [4]								
Passenger Vehicles	1.0		470	94	15	108	20	79	100
2-Axle Trucks	1.5		145	20	5	24	6	16	22
3-Axle Trucks	2.0		68	11	2	12	3	11	14
4+-Axle Trucks	3.0		432	51	9	61	16	43	59
	Building Total (PCE)		*1,115*	*175*	*31*	*205*	*45*	*149*	*194*
Total by Vehicle Classification									
	Passenger Vehicles		470	94	15	108	20	79	100
	Trucks		644	82	16	97	24	69	95
	Total Trip Generation (PCE)		1,115	175	31	205	44	149	195

Notes: Rounding discrepancies may occur. TSF = Thousand Square Feet; PCE = Passenger Car Equivalent

[1] Trip rates from the Institute of Transportation Engineers (ITE), *Trip Generation, 11th Edition, 2021.*

[2] Vehicle Mix and Percent from the Fontana Truck Trip Generation Study, August, 2004.

[3] Vehicle mix and percent from SCAQMD Warehouse Truck Trip Study Data Results and Usage, July 17, 2014.

[4] Passenger Car Equivalent (PCE) factors from the San Bernardino County CMP, Appendix B - Guidelines for CMP Traffic Impact Analysis Reports in San Bernardino County, 2016.

ATTACHMENT B
PROJECT TAZ LOCATION MAP

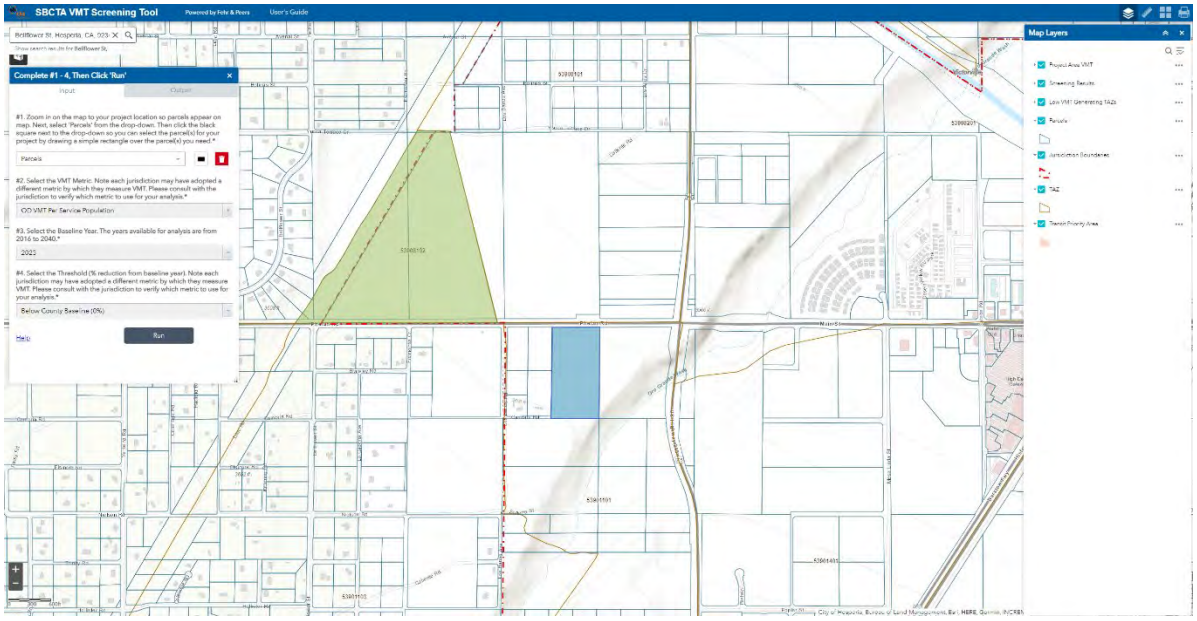
SBCTA VMT Screening Tool
Powered by Fehr & Peers
User's Guide
Complete #1 - 4, Then Click 'Run'
Input
Output
#1. Zoom in on the map to your project location so parcels appear on map. Next, select 'Parcels' from the drop-down. Then click the black square next to the drop-down so you can select the parcel(s) for your project by drawing a simple rectangle over the parcel(s) you need.*
Parcels
#2. Select the VMT Metric. Note each jurisdiction may have adopted a different metric by which they measure VMT. Please consult with the jurisdiction to verify which metric to use for your analysis.*
OD VMT Per Service Population
#3. Select the Baseline Year. The years available for analysis are from 2016 to 2040.*
2025
#4. Select the Threshold (% reduction from baseline year). Note each jurisdiction may have adopted a different metric by which they measure VMT. Please consult with the jurisdiction to verify which metric to use for your analysis.*
Below County Baseline (0%)
Help
Run
Map Layers
Project Area VMT
Screening Results
Low VMT Generating TAZs
Parcels
Jurisdiction Boundaries
TAZ
Transit Priority Area