Project Name: Cotati Village Community

Date: 11/16/2021

Storm Water Low Impact Development Submittal Coversheet

To be submitted with all SW LID submittals

1. **Submittal Information:**

Submittal Date: _____

Initial SW LIDS ☑ **Final SW LIDS** ☐

REGISTERED PROFESSIONAL ENGINEER
ALI MONSHIZADEH
C67674
EXP. 06/30/2023
CIVIL
STATE OF CALIFORNIA

Design Manual Used for design:

☐ 2005 Standard Urban Storm Water Mitigation Plan

☐ 2011 Storm Water Low Impact Development Technical Design Manual

☑ 2017 Storm Water Low Impact Development Technical Design Manual

2. **Applicant Information:**

Applicant Name (Owner or Developer): 116 Associated Investors LLC

Mailing Address: 1101 Fifth Ave, Suite 300

City/State/Zip: San Rafael, CA 94901

Phone/Email/Fax: (415) 456-0600

Project Name: Cotati Village Community

Date: 11/16/2021

Storm Water Low Impact Development Submittal Coversheet

To be submitted with all SW LID submittals

3. Project Information:

Project Name: Cotati Village Community

Site Address: NE corner of Gravenstein Highway and Alder Ave

City/State/Zip: Cotati, CA 94931

APN (s): 144-050-0009 & 046-286-021

Permit # (s):

Subdivision	☐	Grading Permit	☐	Building Permit	☐	Design Review	☑
Use Permit	☐	Hillside Development	☐	Encroachment	☐	Time Extension	☐

Other:

Project Name: Cotati Village Community

Date: 11/16/2021

City of Santa Rosa

Storm Water Low Impact Development Submittal Coversheet

To be submitted with all SW LID submittals

4. Design Information:

Narrative:

Project Description

- ☑ Description of proposed project type, size, location, and any specific uses or features.
- ☑ Description of any sensitive features (creeks, wetlands, trees, etc.) and whether they are going to be preserved, removed or altered.
- ☑ Description of the existing site.
- ☑ Description of how this project triggers these requirements (impervious area, CALGreen, 401 Permit, etc.).
- ☑ Describe any "on-site offset" used.

Pollution Prevention and Runoff Reduction Measures

- ☑ Description of all proposed pollution prevention measures (street sweeping, covered trash enclosures, indoor uses, etc).
- ☑ Description of all Runoff Reduction Measures (Interceptor Trees, Impervious Area Disconnection, and/or Alternative Driveway Design).

Type of BMPs Proposed

- ☑ Description of the types of BMPs selected including priority group that each is in.
- ☑ Description of level of treatment and volume capture achieved for each BMP.

Maintence

- ☑ Description of maintenance for each type of BMP.
- ☑ Description of funding mechanism.
- ☑ Designation of Responsible Party.

Project Name: Cotati Village Community

Date: 11/16/2021

City of Santa Rosa

Storm Water Low Impact Development Submittal Coversheet

To be submitted with all SW LID submittals

Exhibits:

Proposed SW LID Exhibit:

- [x] Exhibit should include: street names, property lines, storm drainage system, waterways, title block, scale and north arrow.
- [x] Tributary areas shown for all inlets (including off-site drainage areas).
- [x] C value for each tributary area.
- [x] Soil Type of existing site.
- [x] New or replaced impervious area shown.
- [x] All inlets and BMP, shown (including unique identifier).
- [ ] All interceptor trees shown.
- [x] All proposed BMPs shown including dimensions.

Existing Condition Exhibit

- [ ] Exhibit should include: street names, property lines, proposed storm drainage system, waterways, title block, scale, and north arrow.
- [ ] Soil Type of existing site.
- [ ] Proposed tributary areas shown for all proposed inlets (including offsite drainage areas). Existing impervious areas.
- [ ] Existing impervious area.

BMP Details:

- [x] Detail for each type of BMP selected- provide a preliminary 8.5”x11” detail for each BMP type or include on submitted drawings. These can be taken straight from the Fact Sheets if no significant changes are proposed.

On Plans:

- [x] Show all applicable elements of the selected BMPs on the appropriate plan sheets.

Calculations:

- [x] Calculations, for each inlet, and summary sheet using the Storm Water Calculator found at *www.srcity.org/stormwaterLID*
- [ ] Supplemental or supporting calculation if applicable.

BMP Selection Table

Project Name: Gravenstein Highway

	Best Management Practice (BMP)	Detail Sheet	Detail Title	**Can be used with...**	High Ground Water	Contamination	Slope Constraints	**Achieves...**	Treatment	Volume Capture	Runoff Reduction Measure	**BMP in priority selected?**	Yes	No	Unique Identifier of BMP per planes	Explanation of selection	Other notes:
Universal BMP- to be considered on all projects.	Living Roof	N/A	N/A		X	X	X		X	X							
	Rainwater Harvesting	N/A	N/A		X	X	X			X							
Runoff Reduction Measures	Interceptor Trees	N/A	N/A		X	X	X				X						
	Bovine Terrace	RRM-01	Bovine Terrace		X						X						
	Vegetated Buffer Strip	RRM-02	Vegetated Buffer Strip								X						
	Impervious Area Disconnection	N/A	N/A		X	X	X				X						
Priority 1- to be installed with no underdrains or liners. Must drain all stading water within 72 hours.	Bioretention	P1-02	Roadside Bioretention - no C & G						X	X		X					
	Vegetated Swale- with Bioretention	P1-06	Swale with Bioretention						X	X							
	Constructed Wetlands	N/A	N/A						X	X							
Priority 2 BMPs- with subsurface drains installed above the capture volume.	Bioretention	P2-02	Roadside Bioretinton - Flush Design Roadside						X	X							
		P2-03	Roadside Bioretenion- Contiguous SW						X	X							
		P2-04	Roadside Bioretenion- Curb Opening						X	X							
		P2-05	Roadside Bioretenion- No C & G						X	X							
	Constructed Wetlands	N/A	N/A						X	X							

Date: _____

Page _____ of _____

BMP Selection Table

	Best Management Practice (BMP)	Detail Sheet	Detail Title	**Can be used with...**	High Ground Water	Contamination	Slope Constraints	**Achieves...**	Treatment	Volume Capture	Runoff Reduction Measure	**BMP in priority selected?**	Yes	No	Unique Identifier of BMP per planes	Explanation of selection	Other notes:
Priority 3 BMPs- installed with subdrains and/or impermeable liner. Does not achieve volume capture and must be used as part of a treatment train.	Bioretention	P3-02	Roadside Bioretinton - Flush Design Roadside		X	X	X		X								
		P3-03	Roadside Bioretenion- Contiguous SW		X	X	X		X								
		P3-04	Roadside Bioretenion- Curb Opening		X	X	X		X								
	Flow Through Planters	P3-05	Flow Through Planters		X	X	X		X								
	Vegetated Swale	P3-06	With Bioretention		X	X	X		X	X							
		P3-07	Vegetated Swale		X	X	X		X								
Priority 4 BMPs- does not achieve volume capture and must be used as part of a	Tree Filter Unit				X	X	X		X								
	Modular Bioretention				X	X	X		X								
Priority 5 BMPs- does not achieve volume capture and must be used as part of a treatment train.	Chambered Separator Units				X	X	X		X								
	Centrifugal Separator Units				X	X	X		X								
	Trash Excluders				X	X	X		X								
	Filter Inserts				X	X	X		X								
Priority 6 BMPs- see the "Offset Program" chapter for details.	Offset Program								N/A	N/A	N/A						
Other	Detention				X												

2017 Storm Water LID Determination Worksheet

PURPOSE AND APPLICABILITY: This determination worksheet is intended to satisfy the specific requirements of "ORDER NO. R1-2015-0030, NPDES NO. CA0025054 NATIONAL POLLUTANT DISCHARGE ELIMINATION SYSTEM (NPDES) PERMIT AND WASTE DISCHARGE REQUIREMENTS FOR DISCHARGES FROM THE MUNICIPAL SEPARATE STORM SEWER SYSTEMS." Additional design requirements imposed by Governing Agencies, such as local grading ordinances, CAL Green, CEQA, 401 permitting, and hydraulic design for flood control still apply as appropriate. Additionally, coverage under another regulation may trigger the requirement to design in accordance with the Storm Water LID Technical Design Manual.

Part 1: Project Information

Cotati Village Community	116 Associated Investors LLC
Project Name	Applicant (owner or developer) Name
NE corner Gravenstein Highway and Alder Ave	1101 Fifth Ave, Suite 300
Project Site Address	Applicant Mailing Address
Cotati, CA 94931	San Rafael / CA / 94901
Project City/State/Zip	Applicant City/State/Zip
	(415) 456-0600
Permit Number(s) - (if applicable)	Applicant Phone/Email/Fax
MFKessler	1 Venture, Suite 130
Designer Name	Designer Mailing Address
Irvine, CA 92618	(949) 339-5332 / ali@mfkessler.com
Designer City/State/Zip	Designer Phone/Email

Type of Application/Project:

☐ Subdivison ☐ Grading Permit ☐ Building Permit ☐ Hillside Development

☑ DesignReview ☐ Use Permit ☐ Encroachment ☐ Time Extensions ☐ Other :_____

PART 2: Project Exemptions

1. Is this a project that creates or replaces *less than* 10,000 square feet of impervious surface[1], including all project phases and off-site improvements?

   ☐ Yes ☑ No

1 Impervious surface replacement, such as the reconstruction of parking lots or excavation to roadway subgrades, is not a routine maintenance activity. Reconstruction is defined as work that replaces surfaces down to the subgrade. Overlays, resurfacing, trenching and patching are defined as maintenance activities per section VI.D.2.b.

2. Is this project a routine maintenance activity[2] that is being conducted to maintain original line and grade, hydraulic capacity, and original purpose of facility such as resurfacing existing roads and parking lots?

☐ Yes ☑ No

3. Is this project a stand alone pedestrian pathway, trail or off-street bike lane?

☐ Yes ☑ No

4. **Did you answer "YES" to any of the questions in Part 2?**

☐ **YES:** This project will *not* need to incorporate permanent Storm Water BMP's as required by the NPDES MS4 Permit. **Please complete the "Exemption Signature Section" on Page 4.**

☑ **NO:** Please complete the remainder of this worksheet.

Part 3: Project Triggers

Projects that Trigger Requirements:
Please answer the following questions to determine whether this project requires permanent Storm Water BMP's and the submittal of a SW LIDs as required by the NPDES MS4 Permit order No. R1-2015-0030.

1. Does this project create or replace a combined total of 10,000 square feet or more of impervious surface[1] including all project phases and off-site improvements?

☑ Yes ☐ No

2. Does this project create or replace a combined total or 10,000 square feet or more of impervious streets, roads, highways, or freeway construction or reconstruction[3]? ☐ Yes ☑ No

3. Does this project create or replace a combined total of 1.0 acre or more of impervious surface[1] including all project phases and off-site improvements? ☐ Yes ☑ No

4. **Did you answer "YES" to any of the above questions in Part 3?**

☑ **YES:** This project will need to incorporate permanent Storm Water BMP's as required by the NPDES MS4 Permit. **Please complete remainder of worksheet and sign the "Acknowledgement Signature Section" on Page 4.**

☐ **NO:** This project will *not* need to incorporate permanent Storm Water BMP's as required by the NPDES MS4 permit. **Please complete the "Exemption Signature Section" on Page 4.**

---

1 Imprevious surface replacement, such as the reconstruction of parking lots or excavation to roadway subgrades, is not a routine maintence activity. Reconstruction is defined as work that replaces surfaces down to the subgrade. Overlays, resurfacint, trenching and patching are defined as maintenance activities per section VI.D.2.b.

2 "Rountine Maintenance Activity" includes activities such as overlays and/or resurfacing of existing roads or parking lots as well as trenching and patching activities and reroofing activities per section VI.D.2.b.

3 "Reconstruction" is defined as work that extends into the subgrade of a pavement per section VI.D.2.b.

Part 4: Project Description

1. Total Project area: 7.55 ( ) square feet (•) acres

2. Existing land use(s): (check all that apply)

[✔] Commercial [ ] Industrial [ ] Residential [ ] Public [ ] Other

Description of buildings, significant site features (creeks, wetlands, heritage trees), etc.:

The 7.55 acres site is currently vacant and undeveloped.

3. Existing impervious surface area: 2,000 (•) square feet ( ) acres

4. Proposed Land Use(s): (check all that apply)

[✔] Commercial [ ] Industrial [ ] Residential [ ] Public [ ] Other

Description of buildings, significant site features (creeks, wetlands, heritage trees), etc.:

The project proposes the development of 3 multifamily residential buildings and 3 live/work residential buildings. Site will also feature a clubhouse with a pool along with concrete pathways and patios, asphalt parking areas, hardscape and landscape.

5. Existing impervious surface area: 234,589 (•) square feet ( ) acres

Acknowledgment Signature Section:

As the property owner or developer, I understand that this project is required to implement permanent Storm Water Best Management Practices and provide a Storm Water Low Impact Development Submittal (SW LIDS) as required by the City's National Pollutant Discharge Elimination System (NPDES) Municipal Separate Storm Sewer Systems (MS4) Permit Order No. R1-2015-0030. *Any unknown responses must be resolved to determine if the project is subject to these requirements.

_____ 11/16/2021

Applicant Signature Date

Exemption Signature Section:

As the property owner or developer, I understand that this project as currently designed does not require permanent Storm Water BMP's nor the submittal of a Storm Water Low Impact Development Submittal (SW LIDS) as required by the City's National Pollutant Discharge Elimination System (NPDES) Municipal Separate Storm Sewer Systems (MS4) Permit*. I understand that redesign may require submittal of a new Determination Worksheet and may require permanent Storm Water BMP's.

_____ _____

Applicant Signature Date

*** This determination worksheet is intended to satisfy the specific requirements of "ORDER NO. R1-2015-0030, NPDES NO. CA0025054 NATIONAL POLLUTANT DISCHARGE ELIMINATION SYSTEM (NPDES) PERMIT AND WASTE DISCHARGE REQUIREMENTS FOR DISCHARGES FROM THE MUNICIPAL SEPARATE STORM SEWER SYSTEMS." Additional design requirements imposed by Governing Agencies, such as local grading ordinances, CAL Green, CEQA, 401 permitting, and hydraulic design for flood control still apply as appropriate. Additionally, coverage under another regulation may trigger the requirement to design in accordance with the Storm Water LID Technical Design Manual.**

Implementation Requirements: *All calculations shall be completed using the "Storm Water Calculator" available at: www.srcity.org/stormwaterLID*

Hydromodification Control/100% Volume Capture: Capture (infiltration and/or reuse) of 100% of the volume of runoff generated by a 1.0" 24-hour storm event, as calculated using the "Urban Hydrology for Small Watersheds" TR-55 Manual method. This is a retention requirement.

***Treatment Requirement*:** Treatment of 100% of the flow calculated using the modified Rational Method and a known intensity of 0.20 inches per hour.

Delta Volume Capture Requirement: Capture (infiltration and/or reuse) of the increase in volume of storm water due to development generated by a 1.0" 24-hour storm event, as calculated using the "Urban Hydrology for Small Watersheds" TR-55 Manual method. This is a retention requirement.

Stormwater Control Plan

For

Cotati Village Community

Prepared: October 14, 2022

Revised: December 18, 2023

Prepared for:

116 Associated Investors LLC

1101 Fifth Ave, Suite 300

San Rafael, CA 94901

Prepared by:

Ali Monshizadeh
MFKessler
(949) 339-5361

Table of Contents

I. BMP Selection Table, Stormwater LID Determination Worksheet & Project Data1

II. Setting1

II.A.1. Project Location and Description1

II.B. Existing Site Features and Conditions1

II.C. Opportunities and Constraints for Stormwater Control1

III. Low Impact Development Design Strategies2

III.A. Optimization of Site Layout2

III.A.1. Limitation of development envelope2

III.A.2. Preservation of natural drainage features2

III.A.3. Setbacks from creeks, wetlands, and riparian habitats2

III.A.4. Minimization of imperviousness2

III.A.5. Use of drainage as a design element2

III.B. Dispersal of Runoff to Pervious Areas2

III.C. Stormwater Control Measures2

IV. Documentation of Drainage Design2

IV.A. Descriptions of Each Drainage Management Area2

IV.A.1. Table of Drainage Management Areas2

IV.A.2. Drainage Management Area Descriptions2

V. Source Control Measures3

V.A. Site activities and potential sources of pollutants3

V.B. Source Control Table3

V.C. Features, Materials, and Methods of Construction of Source Control BMPs4

VI. Stormwater Facility Maintenance4

VI.A. Ownership and Responsibility for Maintenance in Perpetuity4

VI.B. Summary of Maintenance Requirements for Each Stormwater Facility5

VII. Construction Checklist5

VIII. Certifications6

Tables

Table 1. Project Data 1
Table IV.B.2. Self-Treating Areas 3
Table IV.B.5. Areas Draining to Bioretention Facilities. 4
Table V. Sources and Source Control Measures 5
Table VII. Construction Checklist 7

Figures

Vicinity Map 9

Attachments

Attch. 1 - Stormwater Control Plan Exhibit
Attch. 2 – Non LID Sizing Calculations
Attch. 3 – Soils
Attch. 4 – Educational Materials
Attch. 5 – Operations & Maintenance Plan

Appendices

This Stormwater Control Plan was prepared using the Santa Rosa LID Manual, revised December 2020.

I. Project Data

Table 1. Project Data Form

Project Name/Number	Cotati Village Community
Application Submittal Date	
Project Location	APNs: 046-286-021, 144-050-009
Project Phase No.	N/A
Project Type and Description	Proposed development of 3 multifamily buildings and 3 live/work buildings.
Total Project Site Area (acres)	7.55
Total New and Replaced Impervious Surface Area	187,743 sf
Total Pre-Project Impervious Surface Area	2,178 sf
Total Post-Project Impervious Surface Area	187,743 sf

II. Setting

II.A.1. **Project Location and Description**

The proposed project is located on a vacant lot on the corner of Alder Avenue and Gravenstein Highway in the City of Cotati, California. The project is in a commercial zone and will consist of the development of 3 multifamily residential buildings and 3 live/work residential buildings. Scope of work will also include the construction of clubhouse and pool, addition of a parking lot, 4 driveway approaches, hardscaping, landscaping and other associated improvements. Project site is 7.55 acres.

II.B. Existing Site Features and Conditions

The existing site is currently vacant with an assortment of miscellaneous trees and shrubs along with 1 driveway approach. The site is relatively flat and drains towards the north east.

II.C. Opportunities and Constraints for Stormwater Control

Opportunities: The project proposes several outdoor sitting areas which can be beautified by landscape additions. These can be hybrid landscape/standing areas utilized for water retention as well as social space.

Constraints: Having to work with existing residential development to the north and the relatively flat topography of the site.

III. Low Impact Development Design Strategies

III.A. Optimization of Site Layout

III.A.1. Limitation of development envelope

III.A.2. Preservation of natural drainage features Setbacks from creeks, wetlands, and riparian habitats

III.A.3. Minimization of imperviousness

III.A.4. Use of drainage as a design element

III.B. Dispersal of Runoff to Pervious Areas

III.C. Stormwater Control Measures

IV. Documentation of Drainage Design

IV.A. Descriptions of Each Drainage Management Area

IV.A.1. Table of Drainage Management Areas

DMA Name	Surface Type	Area (square feet)
1	Landscape/building/hardscape	64,926
2A	Landscape/building/hardscape	219,910
2B	Existing Landscape/building/hardscape	144,463
3	Natural parkland	34,332
4	Future Road	16,087

IV.A.2. Drainage Management Area Descriptions

DMA 1, 2A & 2B, 3, & 4

Per Santa Rosa LID Manual, Chapter 5, prioritization needs to be given to small scale landscaped based infiltration BMPs that treat storm water as close to the source as possible. These types of LID BMPs are given the highest priority in the selection process. Our project site is determined to be Priority 1 which state that features must meet all the criteria of LID. Therefore, we are implementing a Vegetated Swale with Bioretention for DMA 1, DMA 2 and DMA 3. This BMP will function as a soil and plant based filtration and infiltration feature that removes pollutants through a variety of natural physical, biological, and chemical treatment processes.

DMA 1 is will treat a tributary areas of 1.49 AC by draining to Biretention areas along the south of the project. The total area for this area is 2,000 SF. DMA 2 is divided into two subareas. DMA 2A (5.05 AC) is the northerly half of the proposed project site. DMA 2B (3.32 AC) is the existing Cotati Cottages including Ford Lane. DMA 3 includes a tributary area of 0.79 AC. DMA 4 (0.37

AC) is a small portion of the Future Cotati Ave that will drain into the ditch along Gravenstein Hwy. All of the proposed project area DMAs (1, 2A, & 3) will be treated by providing a total BMP area of 6,000 sf. Calculations have been provided herein for the sizing of these BMPs. Project will implement site design concepts to achieve minimizing urban runoff, minimizing impervious footprint, conserve natural areas and minimize directly connected impervious areas. Site will direct roof drains into landscape features when applicable, plant trees near impervious areas and disconnection of impervious areas.

These DMAs will meet 105% of volume capture and treatment requirements.

Source Control Measures

IV.C. Site activities and potential sources of pollutants

Potential Source of Runoff Pollutants	Potential Pollutants
Vehicle Traffic	Organic compounds, heavy metals
Landscaping	Phosphorous, nitrogen, pesticides/herbicides

IV.D Source Control Table

Potential source of runoff pollutants	Permanent source control BMPs	Operational source control BMPs
On-site storm drain inlets	• Mark all inlets with the words "No Dumping! Flows to Bay" or similar.	• Maintain and periodically repaint or replace inlet markings • Provide stormwater pollution prevention information to new site owners, lessees, or operators • See applicable operational BMPs in Fact Sheet SC-41, "Building and Grounds maintenance" in the CASQA Stormwater Quality Handbooks at www.casqa.org/resources/bmphandbooks • Include the following in lease agreements: "Tenant shall now allow anyone to discharge anything to storm drains or to store or deposit materials so as to create a potential discharge to storm drains."
Plazas, sidewalks, and parking lots		• Sweep plazas, sidewalks, and parking lots regularly to prevent accumulation of litter and debris. • Collect debris from pressure washing to prevent entry into the storm drain system.

		• Collect washwater containing any cleaning agent or degreaser and discharge to the sanitary sewer not to a storm drain.
Landscape/ Outdoor pesticide use/Building and grounds maintenance	Final landscape plans will accomplish the following: • Preserve existing native trees, shrubs, and ground cover to the maximum extent possible • Design landscaping to minimize irrigation and runoff, to promote surface infiltration where appropriate, and to minimize the use of fertilizers and pesticides that can contribute to stormwater pollution. • Where landscaped areas are used to retain or detain stormwater, specify plants that are tolerant of saturated soil conditions • Consider using pest-resistant plants, especially adjacent to hardscape • To ensure successful establishment, select plants appropriate to site soils, slopes, climate, sun, wind, rain, land use, air movement, ecological consistency, and plant interactions.	
Fire Sprinkler Test Water	• Provide a means to drain fire sprinkler test water to the sanitary sewer.	• See the note in Fact Sheet SC-41, "building and Grounds Maintenance," in the CASQA Stormwater Quality

IV.E. Features, Materials, and Methods of Construction of Source Control BMPs

V. Stormwater Facility Maintenance

V.A. Ownership and Responsibility for Maintenance in Perpetuity

The owner to be responsibility for all operation and maintenance of stormwater treatment and flow-control facilities until such time that a PMC is contracted.

V.B. Summary of Maintenance Requirements for Each Stormwater Facility

Stormwater Facility	Maintenance Activity	Maintenance Frequency
Swale with Bioretention	Maintenance to be conducted per manufacture's recommendations: • Mow and irrigate during dry weather to the extent necessary to keep vegetation alive. Where 6-inch high grasses are used, the grass height shall be at least 3 inches after mowing. Where mowed grasses are shown, the grass height shall be mowed when the height exceeds 3 inches. • Remove obstructions and trash from vegetated swale. • Pesticides and fertilizers shall not be used in the swale. • Remove obstructions and trash • Ponded flow is drained within 72 hours after a rainfall event. • If ponding is observed, grading will be required to restore positive drainage.	Inspected and maintained monthly during rainy season.

VI. Construction Checklist

[See the instructions on page 3-8 of the *Post-Construction Manual*.]

Stormwater Control Plan	Source Control or Treatment Control Measure	See Plan Sheet #s
Grading Plan	Mark all inlets with the words "No Dumping! Flows to Bay" or similar	All
Landscaping Plan	Preserve existing native trees, shrubs, and ground cover to the maximum extent possible	All
Grading Plan	Design landscaping to minimize irrigation and runoff, to promote surface infiltration where appropriate, and to minimize the use of fertilizers	All

	and pesticides that can contribute to stormwater pollution.	
Landscaping Plan	Where landscaped areas are used to retain or detain stormwater, specify plants that are tolerant of saturated soil conditions	All
Landscaping Plan	To ensure successful establishment, select plants appropriate to site soils, slopes, climate, sun, wind, rain, land use, air movement, ecological consistency, and plant interactions.	All
Landscaping Plan	Consider using pest-resistant plants, especially adjacent to hardscape	All
Architectural Plan	Provide a means to drain fire sprinkler test water to the sanitary sewer.	All

VII. Certifications

The preliminary design of stormwater treatment facilities and other stormwater pollution control measures in this plan are in accordance with the current edition of the BASMAA *Post-Construction Manual* [Check with local staff regarding other certification requirements.]

Figure I. Vicinity Map

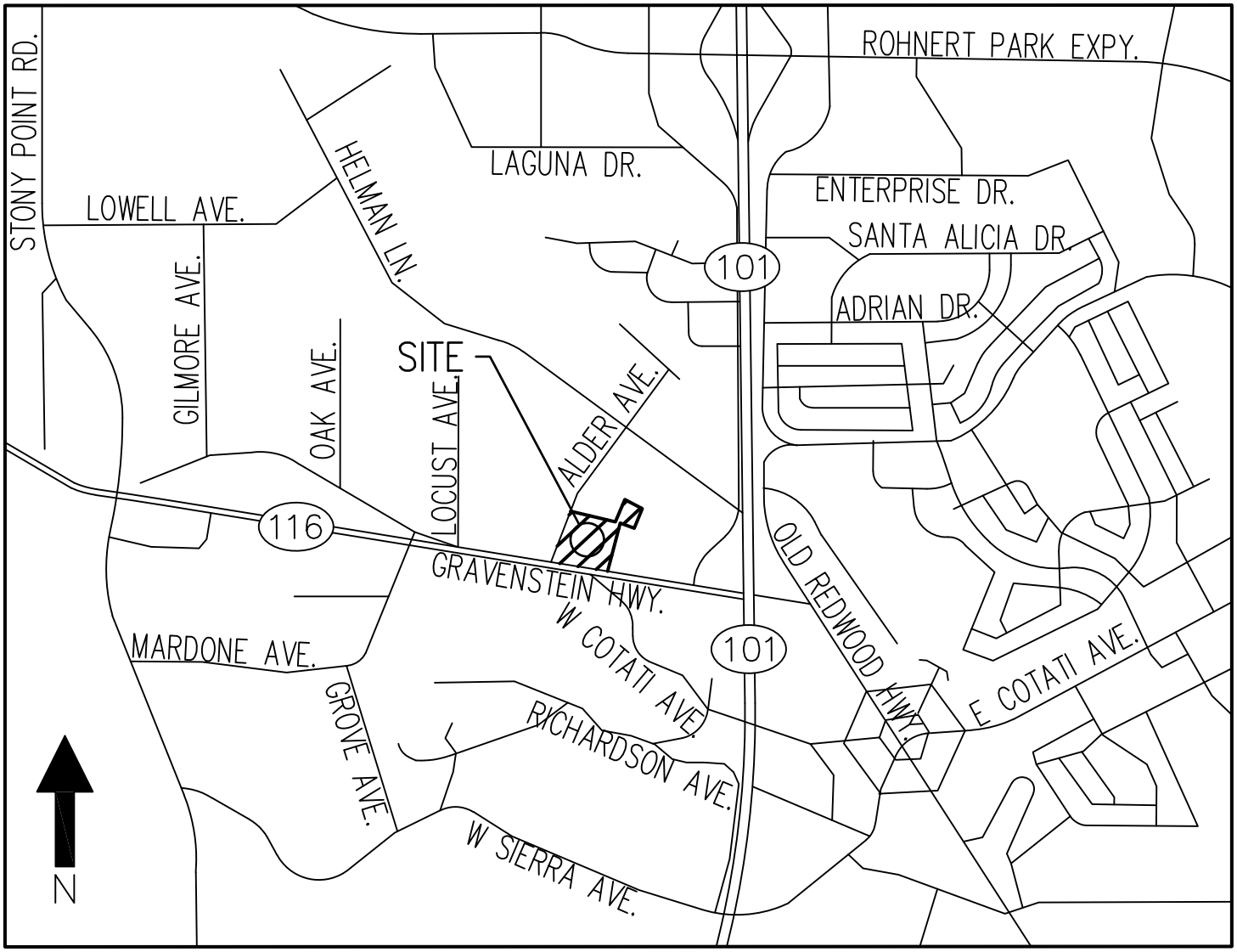

VICINITY MAP

N.T.S.

Attachment 1. Stormwater Control Plan Exhibit

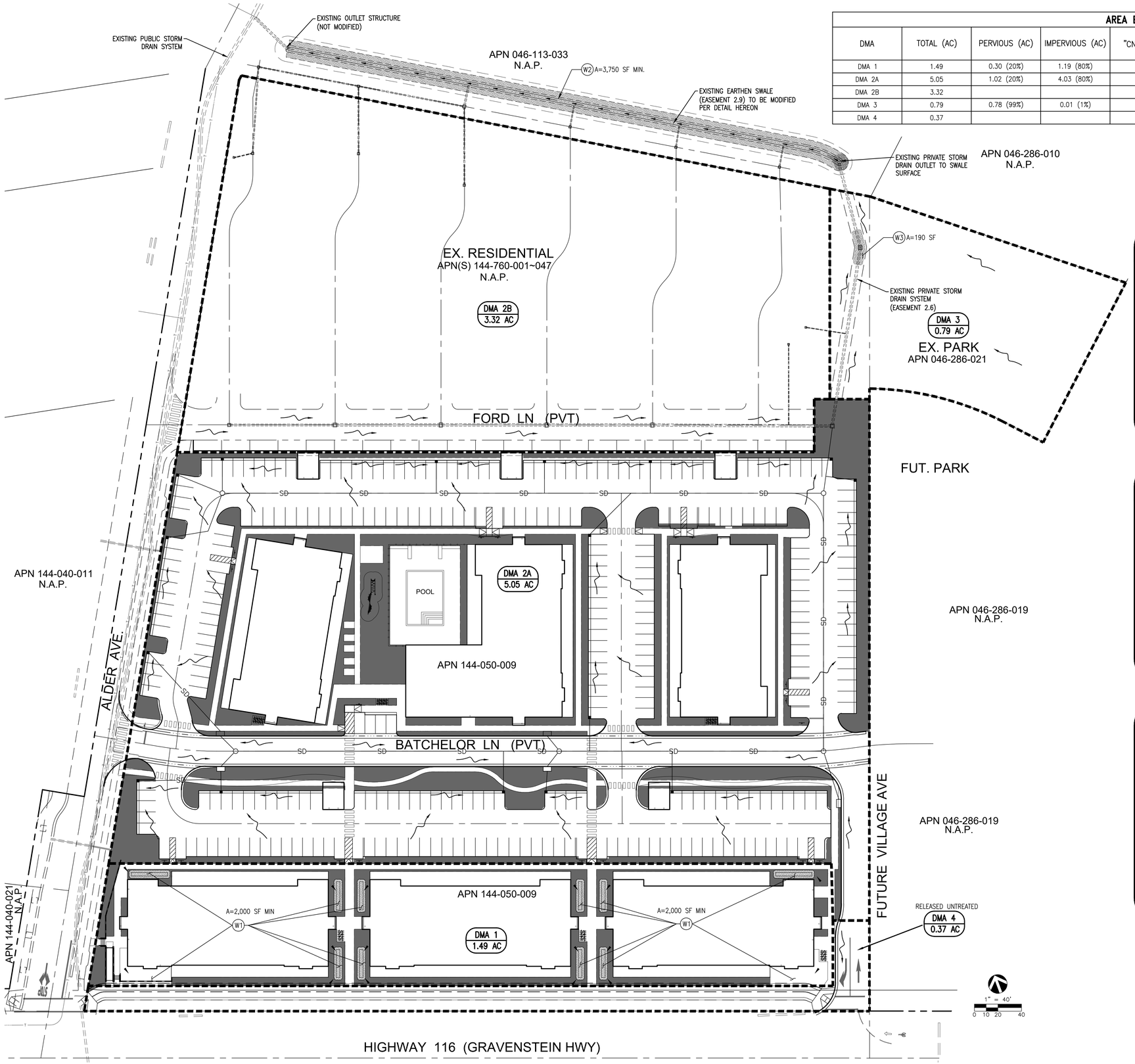

AREA BREAKDOWN

DMA	TOTAL (AC)	PERVIOUS (AC)	IMPERVIOUS (AC)	"CN" VALUE	REQUIRED BIOSWALE AREA (SF)	DIMENSIONS	DEPTH OF ROCK	VOLUME CAPTURED (REQUIRED)
DMA 1	1.49	0.30 (20%)	1.19 (80%)	90	2000	VARIES	1.5 FEET	1,750 (1,733)
DMA 2A	5.05	1.02 (20%)	4.03 (80%)	90	3750	460'x15'	3.5 FEET	6,480 (2,263)
DMA 2B	3.32							N/A
DMA 3	0.79	0.78 (99%)	0.01 (1%)	90	190	30'x8'	1.0 FEET	1,010 (353)
DMA 4	0.37							N/A

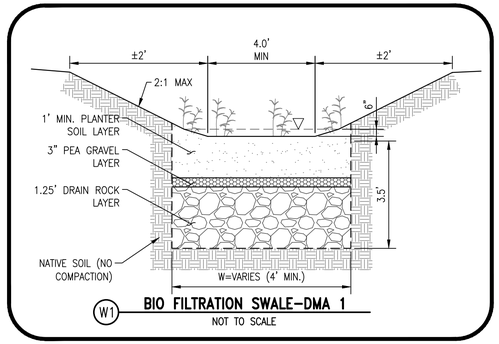

W1 BIO FILTRATION SWALE–DMA 1
NOT TO SCALE

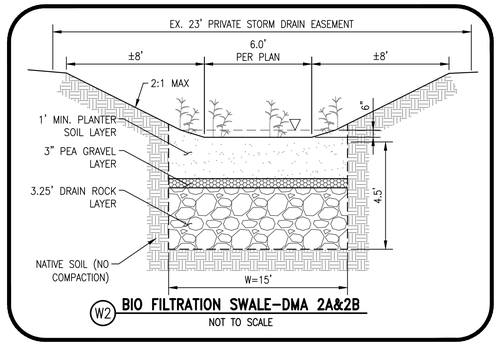

W2 BIO FILTRATION SWALE–DMA 2A&2B
NOT TO SCALE

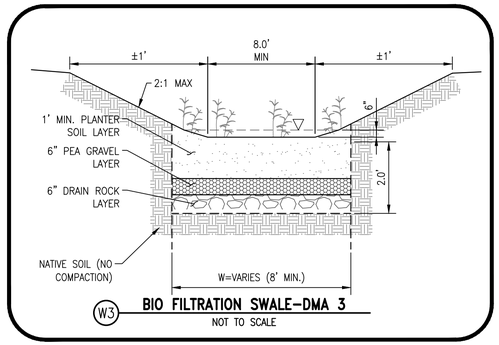

W3 BIO FILTRATION SWALE–DMA 3
NOT TO SCALE

MFKessler
Civil Engineering, Land Planning, Surveying
ONE VENTURE, SUITE 130
IRVINE, CA 92618
(949) 339-5330
MFKESSLER.COM

COTATI VILLAGE COMMUNITY

DECEMBER 18, 2023

COTATI, CA

REVISED SUBMITTAL

1. THE COPYRIGHT OF THIS DRAWING IS VESTED IN MFKESSLER INC. AND IT MAY NOT BE REPRODUCED IN WHOLE OR PART OR USED FOR OTHER PURPOSES WITHOUT THE EXPRESS PERMISSION OF THE COPYRIGHT HOLDERS.
2. THIS DRAWING IS TO BE READ IN CONJUNCTION WITH ALL RELEVANT ARCHITECT'S, LANDSCAPE ARCHITECT'S DRAWINGS AND SPECIFICATIONS
3. THIS SHEET DEPICTS THE PRELIMINARY WATER QUALITY LAYOUT.
4. SINCE THE ADJACENT COTATI VILLAS TRACT DRAINS TO THE MODIFIED BIO-INFILTRATION SWALE, IT IS INCLUDED IN THE CALCULATIONS.
5. THE SOUTH 19% OF THE SITE IS TREATED BY 12 BIO-INFILTRATION SWALES LOCATED BETWEEN BUILDINGS A, B, & C.
6. THE NORTH 81% OF THE SITE IS TREATED IN THE MODIFIED BIO-INFILTRATION SWALE LOCATED ALONG THE NORTH PROPERTY LINE OF THE ADJACENT COTATI COTTAGES TRACT. SEE EASEMENTS 2.6 AND 2.9 ON SHEET C3.
7. THE OUTLET STRUCTURE OF THE BIO-FILTRATION SWALE WILL REMAIN UNCHANGED, AND THE OUTFLOW RATE WILL REMAIN UNCHANGED.
8. PER USDA GEOTECH REPORT, SOILS ARE TYPE C WITH LOW PERMEABILITY (0.05~0.2 IN/HR).
9. REVISED TO MATCH NEW SITE PLAN.

REGISTERED PROFESSIONAL ENGINEER
ALI MONSHTAZEH
C67674
EXP. 06/30/2025
CIVIL
STATE OF CALIFORNIA

PRELIMINARY STORMWATER CONTROL PLAN

C5-0

Attachment 2. Bioretention Calculations

LID BMP Summary Page & Site Global Values

Welcome to the City of Santa Rosa Storm Water BMP Calculator. This calculator and it's worksheets are required to be submitted with all projects containing LID features.

NOTE: In order for this calculator to function properly, macros must be enabled.

Go to www.srcity.org/stormwaterlid for the latest version of this calculator.

Rev. 8.11.0 11212019

Project Information: (Required Information)

Project Name:	Gravenstein Hwy 116
Address/Location:	Gravenstein & Alder
Designer:	MFKessler
Date:	11/7/2023

Site Information:

Mean Seasonal Precipitation (MSP) of Project Site:	30.00	(inches)
K=MSP/30 K=	1.00	
Impervious area - Pre Project:	100	ft^2
New or replaced impervious area - Post Project:	51,770	ft^2

Click on Button to begin Calculations:

BMP Data Input

Based upon the pre and post development impervious area or special condition*, the design requirement is:

100% Capture & Treatment

*** Treatment Only Special Condition**

Check this box only if it has been determined by the North Coast Regional Water Quality Control Board that infiltration will not be required on this project. Documentation of NCRWQCB approval MUST be provided.

☐

Cell Color Key:

Yellow Cells	- Data Input. Require information. User input or pick from drop down list.
lue Cells	- Calculated results by worksheet.
een Cells	- Drop Down Value, Values/results from other worksheets.

tion Buttons Select a BMP ID (Green Heading below) and then choose function:

Retrieve BMP Saved Data — Retrieves the saved selected BMP data and loads into Input BMP Data worksheet(s). **Will overwrite existing unsaved data in worksheets!**

Delete Selected BMP — Will Delete the selected BMP and it's saved data. **Data Can Not be recovered!**

Print Selected BMP / **Print All** — Prints this page (Summary) and the **saved data** of the selected BMP ID or ALL BMPs listed. "Print Selected BMP" and "Print All BMPs" will not overwrite existing data in the worksheets.

Print Selected Worksheets — Prints the selected worksheet with the current data. Use the "Retrieve BMP Saved Data" to load data into worksheets.

Summary of BMPs Design: (saved data)

	Tributary Area		Requirements		Design Results						
						Hydromodification Control		Flow Base Treatment		Delta Volume Capture	
BMP ID:	Tributary Area (ft^2)	Runoff Reduction Measures (Y/N)	Type of Requirement Met:	Type of BMP Design	Percent Achieved	Required $V_{Hydromod}$ (ft^3)	Achieved (ft^3)	Required Q Treatment (cfs)	Achieved Q Treatment (cfs)	Required Vdelta (ft^3)	Achieved Vdelta (ft^3)
1	64926	No	Hydromod Volume Capture	Priority 1: P1-06 Swale with Bioretention	100.99	1732.8750	1750.0000				

STORM WATER CALCULATOR

Gravenstein Hwy 116
Gravenstein Alder
MFKessler
11/7/2023

BMP Input Worksheet

Enter BMP ID and BMP's Information:

To start a New BMP calculation, Press the **Clear/Reset All Inputs** button.

BMP ID (MUST BE unique): 1

BMP's Physical Tributary Area: 64,926 ft^2 / 1.490 Acres

BMP Design Criteria: 100% Capture & Treatment

Type of BMP Design (select from pull down):

Priority 1: P1-06 Swale with Bioretention

BMP Notes:

Clear/Reset All Inputs | Calculate All Sections | Save BMP Data and Results

Instructions: Enter in the Individual BMP's Tributary parameters in the **yellow cells**. To view the calculation worksheet, Click on the Display button for that section. All calculations are performed in the individual worksheets. To update the results on this worksheet, use the "**Calculate Results**" or "**Calculate All**" buttons.

CAUTION - MUST USE the Calculate button(s) to update results!

Action Buttons:

Clear/Reset All Inputs	Clear or load default values into cells of individual section or entire page.
Calculate	Will load values into worksheet, calculate and displays results.
Display Calculation Worksheet	Will load the values, calculate and display the corresponding worksheet with results.
Save BMP Data and Results	Calculates all sections before saving the BMP's design data, and then copies the results to the Summary worksheet by BMP ID. Will not save BMP if error(s) are present in the Runoff Reduction Measures or selected treatment method.

Runoff Reduction Measures

Note: The maximum Runoff Reduction Measures allowed is 50% of the physical tributary area.

Interceptor Trees

Number of new ***Evergreen Trees*** that qualify as interceptor trees: 0
Number of new ***Deciduous Trees*** that qualify as interceptor trees: 0
Enter square footage of qualifying **existing tree canopy:** 0 ft^2

Interceptor Tree trunk must be no greater than 25 feet from impervious surface.

Disconnected Roof Drains

Select disconnection condition: Select disconnection condition

Method 1

Amount of rooftop area that drain to disconnected downspouts: 0 ft^2

OR Method 2

Percent of rooftop area to be disconnected from downspouts: 0 %
Select Density: 1 Units per Acre

Paved Area Disconnection

Paved Area Type (select from drop down list): Select paved area type
Enter area of alternatively designed paved area: 0.0 ft^2

INSTRUCTIONS:
Method 1: Total Rooftop square foot area (ft^2) that is drained by the downspouts flowing to the single Tributary Area as designated. Can be from separate buildings. **OR**
Method 2: Total Rooftop percentage (%) area relating to the total physical Tributary Area as designated.

Buffer Strips & Bovine Terraces

Area draining to a Buffer Strip or Bovine Terrace: 0.0 ft^2

Total Runoff Reduction Measures : 0 ft^2

Resulting reduced Tributary Area used for BMP sizing: 64,926 ft^2

Reset Reduction Measures Inputs | Display "Runoff Reduction Measures" calculation worksheet | Calculate Results

Hydromodification Control Requirement: 100% Volume Capture; $V_{hydromod}$

If User Composite CN is used, Supporting calculations are required to be submitted.

Post development hydrologic soil type within tributary area: C: 0.05 - 0.15 in/hr infiltration (transmission) rate
Post development ground cover description: Residential - 1/8 acre or less (town houses)
CN_{POST} = 90
User Composite post development CN:

Entering a calculated composite CN will override selections made from the pull down menus above.

$V_{Hydromod}$: 1,732.87 ft^3

Reset Hydromod Inputs | Display "Hydromod" calculation worksheet | Calculate Results

BMP Sizing Tool: Hydromodification Control Requirement

BMP Depth:
- Measured from ground surface WITHOUT perforated pipe.
- Measured from bottom of perforated pipe if installed.

	BMP Volume Below Ground		Ponded Water Above Ground	
Imported BMP Soil Porosity:	0.35			
Depth:	2.50	ft	0.00	ft
Width:		ft	0.00	ft
Length:		ft	0.00	ft

-- OR -- ***Entering an Area information will override Width & Length information!***

Area BMP: 2,000.00 ft^2 Ponded Area: 0.00 ft^2

Total Volume achieved in BMP: 1,750.00 ft^3

The above and below ground Depth, Width, and Length or Areas will be summed together for the Percent of Requirement Achieved calculation.

Percent of Requirement Achieved: 100.99 %
Results must be at least 100%

Reset Hydromod Sizing Inputs | Display "Hydromod Sizing" calculation worksheet | Calculate Results

Select Hydromodification BMP Design when Saving? Yes

100% Treatment

$_{ST}$ and or $I_{historical}$ are used, supporting calculations are required to be submitted.

$A_{Reduced}$: 64,926.0 ft^2
Post development surface: Concrete
C_{POST}: 0.80
User Composite post development C_{POST}:

-- OR -- ***Entering a calculated CPOST will override selection made from the pull down menu.***

Treatment Factor (Tf): 1.0 Calculated
$I_{Design\ Storm}$: 0.20 in./hr. Default Value

-- OR -- ***Entering $I_{Historical}$ will override $I_{Design\ Storm}$ and set Tf to 2x***

$I_{Historical}$: in./hr.

$Q_{TREATMENT}$= 0.2385 cfs

Reset Treatment Inputs | Display "100% Treatment" calculation worksheet | Calculate Results

BMP Sizing Tool: 100% Treatment
Horizontal Flows - Swales

Calculated Swale Flow Depth = 0.3246 ft
Vsw = 0.2774 ft/s
Q Calculated Design Flow = 0.2385 cfs

Swale Side Slope (H / V): 2.00 ft./ft. (2:1 Max Slope)
Swale Bed Width: 2.00 ft. (2-7 foot width)
Longitudinal Swale Slope, %: 0.5% (8% Maximum Slope)
Manning Roughness Coefficient for Sheet Flow: Grasses - Short prairie grass
Manning's n: 0.150
Grass Height: 6.0 Inches
Swale Input Flow Characteristics: Flow enters uniformly along swale's length
Minimum required contact time: 12 Minutes
Design Swale Length: 200.0 ft

Percent of Treatment Requirement Achieved: 100.0 %
Results must be at least 100%

STORM WATER CALCULATOR

Gravenstein Hwy 116
Gravenstein Alder
MFKessler
11/7/2023

Reset Treatment Sizing Inputs | Display "Horizontal Flow Sizing" calculation worksheet | Calculate Results

Select 100% Flow Base Treatment Horizontal BMP Design Requirements when Saving? ☐ Yes

BMP Sizing Tool: 100% Treatment
Vertical Flow - Planter Boxes

Infiltration rate of the specified BMP soil, k: 0.00 in./hr.

Q Calculated Design Flow = 0.0000 cfs

Depth of drainage pipe: 1.50 ft (1.5 ft. minimum)
BMP Length: 0.0 ft
BMP Width: 0.0 ft

Percent of Requirement Achieved: 0.0 %
Results must be at least 100%

Reset Vertical Sizing Inputs | Display "Vertical Flow Sizing" calculation worksheet | Calculate Results

Select 100% Flow Base Treatment Vertical BMP Design Requirements when Saving? ☐ Yes

Delta Volume Capture; V_{delta}

If User Composite CN is used, Supporting calculations are required to be submitted.

Hydrologic soil type within tributary area: C: 0.05 - 0.15 in/hr infiltration (transmission) rate
Predevelopment ground cover description: Open Space (lawns, parks, golf courses, cemeteries, etc.) - Poor (<50% grass cover)
Post development ground cover description: Residential - 1/8 acre or less (town houses)
CN_{PRE} = 86
CN_{POST} = 90
User Composite Predevelopment CN:
User Composite Post development CN:

User Cells must be blank to use CN_{PRE} OR CN_{POST} from drop down lists.

-- OR -- Entering a calculated composite CN_{PRE} 0r CN_{POST} will override selections made from the pull down menus above.

V_{DELTA}= 668.089 ft^3

Reset VDelta Inputs | Display "Delta Volume Capture" calculation | Calculate Results

BMP Sizing Tool: Delta Volume Capture Requirement

BMP Depth:
- Measured from ground surface WITHOUT perforated pipe.
- Measured from bottom of perforated pipe if installed.

The above and below ground Depth, Width, and Length or Areas will be summed together for the Percent of Requirement Achieved calculation.

	BMP Volume Below Ground		Ponded Water Area Above Ground	
Imported BMP Soil Porosity:	0.10			
Depth:	0.0	ft	0.00	ft
Width:	0.0	ft	0.0	ft
Length:	0.0	ft	0.0	ft
Area BMP:		ft^2	0	ft^2

-- OR -- Entering Area number will override Width & Length information!

Total Volume for calculation: 0.00 ft^3

Percent of Requirement Achieved: 0.00 %
Results must be at least 100%

Reset VDelta BMP Sizing Inputs | Display "VDelta BMP Sizing" calculation worksheet | Calculate Results

Select Delta Volume Capture BMP Design Requirements when Saving? ☐ Yes

Clear/Reset All Inputs | Calculate All | Save BMP Data and

STORM WATER CALCULATOR

CN Composite Work Sheet

Project: Gravenstein Hwy 116
Address/Location: Gravenstein & Alder
Designer: MFKessler
Date: November 7, 2023

Inlet Number/Tributary Area/BMP: 1

INSTRUCTIONS: Please refer to the "Urban Hydrology for Small Watersheds" (TR-55 manual).

Soil Type (Infiltration Rate)	Cover Description	CN	Area ft^2	Product of CN x Area
D: 0 - 0.05 in/hr infiltration (transmission) rate	Urban districts - Commercial and business	95	64926	6,167,970.0
No Entry	No Entry	0	0	0.0
No Entry	No Entry	0	0	0.0
No Entry	No Entry	0	0	0.0
No Entry	No Entry	0	0	0.0
No Entry	No Entry	0	0	0.0
No Entry	No Entry	0	0	0.0
No Entry	No Entry	0	0	0.0
No Entry	No Entry	0	0	0.0
No Entry	No Entry	0	0	0.0
		Totals =	64926	6,167,970.0

$$CN_{COMPOSIT} = \frac{(CN \times Area) + (CN \times Area) + (CN \times Area) + (CN \times Area) \ldots}{\text{Total Tributary Area}} =$$

Use this $CN_{COMPOSIT}$ = 95.0

STORM WATER CALCULATOR

C Factor Composite Work Sheet

Project:	Gravenstein Hwy 116
Address/Location:	Gravenstein & Alder
Designer:	MFKessler
Date:	November 7, 2023
Inlet Number/Tributary Area/BMP:	1

INSTRUCTIONS: From "Using Site Design to Meet Development Standards For Storm water Quality" by the Bay Area Storm water Management Agencies Association (BASMAA).

Paving Surface	C Number	Area ft^2	Product of C x Area
Asphalt	0.70	2,000	1,400.00
Crushed Aggregate	0.10	1,000	100.00
No Entry	-	-	-
No Entry	-	-	-
No Entry	-	-	-
No Entry	-	-	-
No Entry	-	-	-
No Entry	-	-	-
No Entry	-	-	-
No Entry	-	-	-
	Totals	3,000.00	1,500.00

$$C_{FACTOR\ COMPOSIT} = \frac{(C \times Area) + (C \times Area) + (C \times Area) + (C \times Area) \ldots}{\text{Total Tributary Area}} = C_{FACTOR\ COMPOSIT} = \boxed{0.50}$$

LID BMP Summary Page & Site Global Values

Welcome to the City of Santa Rosa Storm Water BMP Calculator. This calculator and it's worksheets are required to be submitted with all projects containing LID features.

NOTE: In order for this calculator to function properly, macros must be enabled.

Go to www.srcity.org/stormwaterlid for the latest version of this calculator.

Rev. 8.11.0 11212019

Project Information: (Required Information)

Project Name:	Gravenstein Hwy 116
Address/Location:	Gravenstein and Alder
Designer:	MFKessler
Date:	11/7/2023

Site Information:

Mean Seasonal Precipitation (MSP) of Project Site:	30.00	(inches)
K=MSP/30 K=	1.00	
Impervious area - Pre Project:	90,170	ft^2
New or replaced impervious area - Post Project:	175,552	ft^2

Click on Button to begin Calculations:

BMP Data Input

Based upon the pre and post development impervious area or special condition*, the design requirement is:

100% Capture & Treatment

*** Treatment Only Special Condition**

Check this box only if it has been determined by the North Coast Regional Water Quality Control Board that infiltration will not be required on this project. Documentation of NCRWQCB approval MUST be provided.

☐

Cell Color Key:

Yellow Cells	- Data Input. Require information. User input or pick from drop down list.
Blue Cells	- Calculated results by worksheet.
Green Cells	- Drop Down Value, Values/results from other worksheets.

Function Buttons Select a BMP ID (Green Heading below) and then choose function:

Retrieve BMP Saved Data — Retrieves the saved selected BMP data and loads into Input BMP Data worksheet(s). **Will overwrite existing unsaved data in worksheets!**

Delete Selected BMP — Will Delete the selected BMP and it's saved data. **Data Can Not be recovered!**

Print Selected BMP / **Print All** — Prints this page (Summary) and the **saved data** of the selected BMP ID or ALL BMPs listed. "Print Selected BMP" and "Print All BMPs" will not overwrite existing data in the worksheets.

Print Selected Worksheets — Prints the selected worksheet with the current data. Use the "Retrieve BMP Saved Data" to load data into worksheets.

Summary of BMPs Design: (saved data)

	Tributary Area		Requirements		Design Results						
						Hydromodification Control		Flow Base Treatment		Delta Volume Capture	
BMP ID:	Tributary Area (ft^2)	Runoff Reduction Measures (Y/N)	Type of Requirement Met:	Type of BMP Design	Percent Achieved	Required $V_{Hydromod}$ (ft^3)	Achieved (ft^3)	Required Q Treatment (cfs)	Achieved Q Treatment (cfs)	Required Vdelta (ft^3)	Achieved Vdelta (ft^3)
2A	219910	No	Delta Volume Capture	Priority 1: P1-06 Swale with Bioretention	100.23					2262.8738	6480.0000

STORM WATER CALCULATOR

Gravenstein Hwy 116
Gravenstein and Alder
MFKessler
11/7/2023

BMP Input Worksheet

Enter BMP ID and BMP's Information:

To start a New BMP calculation, Press the **Clear/Reset All Inputs** button.

BMP ID (MUST BE unique): 2A
BMP's Physical Tributary Area: 219,910 ft^2 / 5.048 Acres
BMP Design Criteria: 100% Capture & Treatment
Type of BMP Design (select from pull down):
Priority 1: P1-06 Swale with Bioretention
BMP Notes:

Clear/Reset All Inputs | Calculate All Sections | Save BMP Data and Results

Instructions: Enter in the Individual BMP's Tributary parameters in the **yellow cells**. To view the calculation worksheet, Click on the Display button for that section. All calculations are performed in the individual worksheets. To update the results on this worksheet, use the "**Calculate Results**" or "**Calculate All**" buttons.

CAUTION - MUST USE the Calculate button(s) to update results!

Action Buttons:

Clear/Reset All Inputs	Clear or load default values into cells of individual section or entire page.
Calculate	Will load values into worksheet, calculate and displays results.
Display Calculation Worksheet	Will load the values, calculate and display the corresponding worksheet with results.
Save BMP Data and Results	Calculates all sections before saving the BMP's design data, and then copies the results to the Summary worksheet by BMP ID. Will not save BMP if error(s) are present in the Runoff Reduction Measures or selected treatment method.

Runoff Reduction Measures

Note: The maximum Runoff Reduction Measures allowed is 50% of the physical tributary area.

Interceptor Trees

Number of new ***Evergreen Trees*** that qualify as interceptor trees: 0
Number of new ***Deciduous Trees*** that qualify as interceptor trees: 0
Enter square footage of qualifying **existing tree canopy:** 0 ft^2

Interceptor Tree trunk must be no greater than 25 feet from impervious surface.

Disconnected Roof Drains

Select disconnection condition: Select disconnection condition

Method 1
Amount of rooftop area that drain to disconnected downspouts: 0 ft^2
OR Method 2
Percent of rooftop area to be disconnected from downspouts: 0 %
Select Density: 1 Units per Acre

Paved Area Disconnection

Paved Area Type (select from drop down list): Select paved area type
Enter area of alternatively designed paved area: 0.0 ft^2

INSTRUCTIONS:
Method 1: Total Rooftop square foot area (ft^2) that is drained by the downspouts flowing to the single Tributary Area as designated. Can be from separate buildings. **OR**
Method 2: Total Rooftop percentage (%) area relating to the total physical Tributary Area as designated.

Buffer Strips & Bovine Terraces

Area draining to a Buffer Strip or Bovine Terrace: 0.0 ft^2

Total Runoff Reduction Measures : 0 ft^2

Resulting reduced Tributary Area used for BMP sizing: 219,910 ft^2

Reset Reduction Measures Inputs | Display "Runoff Reduction Measures" calculation worksheet | Calculate Results

Hydromodification Control Requirement: 100% Volume Capture; $V_{hydromod}$

If User Composite CN is used, Supporting calculations are required to be submitted.

Post development hydrologic soil type within tributary area: C: 0.05 - 0.15 in/hr infiltration (transmission) rate
Post development ground cover description: Residential - 1/8 acre or less (town houses)
CN_{POST} = 90
User Composite post development CN:

Entering a calculated composite CN will override selections made from the pull down menus above.

$V_{Hydromod}$: 5,869.40 ft^3

Reset Hydromod Inputs | Display "Hydromod" calculation worksheet | Calculate Results

BMP Sizing Tool: Hydromodification Control Requirement

BMP Depth:
- Measured from ground surface WITHOUT perforated pipe.
- Measured from bottom of perforated pipe if installed.

	BMP Volume Below Ground		Ponded Water Above Ground	
Imported BMP Soil Porosity:	0.35			
Depth:	4.50	ft	0.00	ft
Width:		ft	0.00	ft
Length:		ft	0.00	ft

-- OR -- ***Entering an Area information will override Width & Length information!***

Area BMP: 3,750.00 ft^2 Ponded Area: 0.00 ft^2

Total Volume achieved in BMP: 5,906.25 ft^3

The above and below ground Depth, Width, and Length or Areas will be summed together for the Percent of Requirement Achieved calculation.

Percent of Requirement Achieved: 100.63 %
Results must be at least 100%

Reset Hydromod Sizing Inputs | Display "Hydromod Sizing" calculation worksheet | Calculate Results

100% Treatment

$A_{Reduced}$: 219,910.0 ft^2
Post development surface: Concrete
C_{POST}: 0.80
User Composite post development C_{POST}:

-- OR -- ***Entering a calculated CPOST will override selection made from the pull down menu.***

Treatment Factor (Tf): 1.0 Calculated
$I_{Design\ Storm}$: 0.20 in./hr. Default Value

-- OR -- ***Entering $I_{Historical}$ will override $I_{Design\ Storm}$ and set Tf to 2x***

$I_{Historical}$: in./hr.

$Q_{TREATMENT}$= 0.8078 cfs

Reset Treatment Inputs | Display "100% Treatment" calculation worksheet | Calculate Results

BMP Sizing Tool: 100% Treatment
Horizontal Flows - Swales

Caution! Depth Of Flow exceeds 2 inches. See Worksheet for more information.

Calculated Swale Flow Depth = 0.5225 ft
Vsw = 0.5077 ft/s
Q Calculated Design Flow = 0.8078 cfs

Swale Side Slope (H / V): 2.00 ft./ft. (2:1 Max Slope)
Swale Bed Width: 2.00 ft. (2-7 foot width)
Longitudinal Swale Slope, %: 1.0% (8% Maximum Slope)
Manning Roughness Coefficient for Sheet Flow: Grasses - Short prairie grass
Manning's n: 0.150
Grass Height: 3.0 Inches
Swale Input Flow Characteristics: Flow enters uniformly along swale's length
Minimum required contact time: 12 Minutes
Design Swale Length: 368.0 ft

Percent of Treatment Requirement Achieved: 100.5 %
Results must be at least 100%

STORM WATER CALCULATOR

Gravenstein Hwy 116
Gravenstein and Alder
MFKessler
11/7/2023

Reset Treatment Sizing Inputs | Display "Horizontal Flow Sizing" calculation worksheet | Calculate Results

Select 100% Flow Base Treatment Horizontal BMP Design Requirements when Saving? ☐ Yes

BMP Sizing Tool: 100% Treatment
Vertical Flow - Planter Boxes

Infiltration rate of the specified BMP soil, k: 0.00 in./hr.

Q Calculated Design Flow = 0.0000 cfs

Depth of drainage pipe: 1.50 ft (1.5 ft. minimum)
BMP Length: 0.0 ft
BMP Width: 0.0 ft

Percent of Requirement Achieved: 0.0 %
Results must be at least 100%

Reset Vertical Sizing Inputs | Display "Vertical Flow Sizing" calculation worksheet | Calculate Results

Select 100% Flow Base Treatment Vertical BMP Design Requirements when Saving? ☐ Yes

Delta Volume Capture; V_{delta}

If User Composite CN is used, Supporting calculations are required to be submitted.

Hydrologic soil type within tributary area: C: 0.05 - 0.15 in/hr infiltration (transmission) rate
Predevelopment ground cover description: Open Space (lawns, parks, golf courses, cemeteries, etc.) - Poor (<50% grass cover)
Post development ground cover description: Residential - 1/8 acre or less (town houses)
CN_{PRE} = 86
CN_{POST} = 90
User Composite Predevelopment CN:
User Composite Post development CN:

User Cells must be blank to use CN_{PRE} OR CN_{POST} from drop down lists.

V_{DELTA}= 2,262.874 ft^3

-- OR -- *Entering a calculated composite CN_{PRE} 0r CN_{POST} will override selections made from the pull down menus above.*

Reset VDelta Inputs | Display "Delta Volume Capture" calculation | Calculate Results

BMP Sizing Tool: Delta Volume Capture Requirement

BMP Depth:
- Measured from ground surface WITHOUT perforated pipe.
- Measured from bottom of perforated pipe if installed.

	BMP Volume Below Ground		Ponded Water Area Above Ground	
Imported BMP Soil Porosity:	0.35			
Depth:	4.5	ft	0.00	ft
Width:		ft	0.0	ft
Length:		ft	0.0	ft
Area BMP:	1440	ft^2	0	ft^2

-- OR -- **Entering Area number will override Width & Length information!**

Total Volume for calculation: 6,480.00 ft^3

The above and below ground Depth, Width, and Length or Areas will be summed together for the Percent of Requirement Achieved calculation.

Percent of Requirement Achieved: 100.23 %
Results must be at least 100%

Reset VDelta BMP Sizing Inputs | Display "VDelta BMP Sizing" calculation worksheet | Calculate Results

Select Delta Volume Capture BMP Design Requirements when Saving? ☑ Yes

Clear/Reset All Inputs | Calculate All | Save BMP Data and Results

STORM WATER CALCULATOR

CN Composite Work Sheet

Project: Gravenstein Hwy 116
Address/Location: Gravenstein and Alder
Designer: MFKessler
Date: November 7, 2023

Inlet Number/Tributary Area/BMP: 2A

INSTRUCTIONS: Please refer to the "Urban Hydrology for Small Watersheds" (TR-55 manual).

Soil Type (Infiltration Rate)	Cover Description	CN	Area ft^2	Product of CN x Area
D: 0 - 0.05 in/hr infiltration (transmission) rate	Urban districts - Commercial and business	95	219910	20,891,450.0
No Entry	No Entry	0	0	0.0
No Entry	No Entry	0	0	0.0
No Entry	No Entry	0	0	0.0
No Entry	No Entry	0	0	0.0
No Entry	No Entry	0	0	0.0
No Entry	No Entry	0	0	0.0
No Entry	No Entry	0	0	0.0
No Entry	No Entry	0	0	0.0
No Entry	No Entry	0	0	0.0
		Totals =	219910	20,891,450.0

$$CN_{COMPOSIT} = \frac{(CN \times Area) + (CN \times Area) + (CN \times Area) + (CN \times Area) \ldots}{\text{Total Tributary Area}} =$$

Use this $CN_{COMPOSIT}$ = 95.0

STORM WATER CALCULATOR

C Factor Composite Work Sheet

Project: Gravenstein Hwy 116
Address/Location: Gravenstein and Alder
Designer: MFKessler
Date: November 7, 2023

Inlet Number/Tributary Area/BMP: 2A

INSTRUCTIONS: From "Using Site Design to Meet Development Standards For Storm water Quality" by the Bay Area Storm water Management Agencies Association (BASMAA).

Paving Surface	C Number	Area ft^2	Product of C x Area
Asphalt	0.70	2,000	1,400.00
Crushed Aggregate	0.10	1,000	100.00
No Entry	-	-	-
No Entry	-	-	-
No Entry	-	-	-
No Entry	-	-	-
No Entry	-	-	-
No Entry	-	-	-
No Entry	-	-	-
No Entry	-	-	-
	Totals	3,000.00	1,500.00

$$C_{FACTOR\ COMPOSIT} = \frac{(C \times Area) + (C \times Area) + (C \times Area) + (C \times Area) \ldots}{\text{Total Tributary Area}} = C_{FACTOR\ COMPOSIT} = \boxed{0.50}$$

LID BMP Summary Page & Site Global Values

Welcome to the City of Santa Rosa Storm Water BMP Calculator. This calculator and it's worksheets are required to be submitted with all projects containing LID features.

NOTE: In order for this calculator to function properly, macros must be enabled.

Go to www.srcity.org/stormwaterlid for the latest version of this calculator.

Rev. 8.11.0 11212019

Project Information: (Required Information)

Project Name:	Gravenstein Hwy 116
Address/Location:	Gravenstein and Alder
Designer:	MFKessler
Date:	11/7/2023

Site Information:

Mean Seasonal Precipitation (MSP) of Project Site:	30.00	(inches)
K=MSP/30 K=	1.00	
Impervious area - Pre Project:		ft^2
New or replaced impervious area - Post Project:		ft^2

Click on Button to begin Calculations:

BMP Data Input

Based upon the pre and post development impervious area or special condition*, the design requirement is:

Treatment Only

*** Treatment Only Special Condition**

Check this box only if it has been determined by the North Coast Regional Water Quality Control Board that infiltration will not be required on this project. Documentation of NCRWQCB approval MUST be provided.

☐

Cell Color Key:

Yellow Cells	- Data Input. Require information. User input or pick from drop down list.
Blue Cells	- Calculated results by worksheet.
Green Cells	- Drop Down Value, Values/results from other worksheets.

Function Buttons Select a BMP ID (Green Heading below) and then choose function:

Retrieve BMP Saved Data — Retrieves the saved selected BMP data and loads into Input BMP Data worksheet(s). **Will overwrite existing unsaved data in worksheets!**

Delete Selected BMP — Will Delete the selected BMP and it's saved data. **Data Can Not be recovered!**

Print Selected BMP / **Print All** — Prints this page (Summary) and the **saved data** of the selected BMP ID or ALL BMPs listed. "Print Selected BMP" and "Print All BMPs" will not overwrite existing data in the worksheets.

Print Selected Worksheets — Prints the selected worksheet with the current data. Use the "Retrieve BMP Saved Data" to load data into worksheets.

Summary of BMPs Design: (saved data)

	Tributary Area		Requirements		Design Results						
						Hydromodification Control		Flow Base Treatment		Delta Volume Capture	
BMP ID:	Tributary Area (ft^2)	Runoff Reduction Measures (Y/N)	Type of Requirement Met:	Type of BMP Design	Percent Achieved	Required $V_{Hydromod}$ (ft^3)	Achieved (ft^3)	Required Q Treatment (cfs)	Achieved Q Treatment (cfs)	Required Vdelta (ft^3)	Achieved Vdelta (ft^3)
3	34332	No	Delta Volume Capture	Priority 1: P1-06 Swale with Bioretention	100.06					353.2763	1010.0000

STORM WATER CALCULATOR

Gravenstein Hwy 116
Gravenstein and Alder
MFKessler
11/7/2023

BMP Input Worksheet

Enter BMP ID and BMP's Information:

To start a New BMP calculation, Press the **Clear/Reset All Inputs** button.

BMP ID (MUST BE unique): 3
BMP's Physical Tributary Area: 34,332 ft^2 / 0.788 Acres
BMP Design Criteria: Treatment Only
Type of BMP Design (select from pull down):
Priority 1: P1-06 Swale with Bioretention
BMP Notes:

Clear/Reset All Inputs | Calculate All Sections | Save BMP Data and Results

Instructions: Enter in the Individual BMP's Tributary parameters in the **yellow cells**. To view the calculation worksheet, Click on the Display button for that section. All calculations are performed in the individual worksheets. To update the results on this worksheet, use the "**Calculate Results**" or "**Calculate All**" buttons.

CAUTION - MUST USE the Calculate button(s) to update results!

Action Buttons:

Clear/Reset All Inputs	Clear or load default values into cells of individual section or entire page.
Calculate	Will load values into worksheet, calculate and displays results.
Display Calculation Worksheet	Will load the values, calculate and display the corresponding worksheet with results.
Save BMP Data and Results	Calculates all sections before saving the BMP's design data, and then copies the results to the Summary worksheet by BMP ID. Will not save BMP if error(s) are present in the Runoff Reduction Measures or selected treatment method.

Runoff Reduction Measures

Note: The maximum Runoff Reduction Measures allowed is 50% of the physical tributary area.

Interceptor Trees

Number of new ***Evergreen Trees*** that qualify as interceptor trees: 0
Number of new ***Deciduous Trees*** that qualify as interceptor trees: 0
Enter square footage of qualifying **existing tree canopy:** 0 ft^2

Interceptor Tree trunk must be no greater than 25 feet from impervious surface.

Disconnected Roof Drains

Select disconnection condition: Select disconnection condition

Method 1
Amount of rooftop area that drain to disconnected downspouts: 0 ft^2
OR Method 2
Percent of rooftop area to be disconnected from downspouts: 0 %
Select Density: 1 Units per Acre

Paved Area Disconnection

Paved Area Type (select from drop down list): Select paved area type
Enter area of alternatively designed paved area: 0.0 ft^2

Buffer Strips & Bovine Terraces

Area draining to a Buffer Strip or Bovine Terrace: 0.0 ft^2

INSTRUCTIONS:
Method 1: Total Rooftop square foot area (ft^2) that is drained by the downspouts flowing to the single Tributary Area as designated. Can be from separate buildings. **OR**
Method 2: Total Rooftop percentage (%) area relating to the total physical Tributary Area as designated.

Total Runoff Reduction Measures : 0 ft^2

Resulting reduced Tributary Area used for BMP sizing: 34,332 ft^2

Reset Reduction Measures Inputs | Display "Runoff Reduction Measures" calculation worksheet | Calculate Results

Hydromodification Control Requirement: 100% Volume Capture; $V_{hydromod}$

If User Composite CN is used, Supporting calculations are required to be submitted.

Post development hydrologic soil type within tributary area: C: 0.05 - 0.15 in/hr infiltration (transmission) rate
Post development ground cover description: Open Space (lawns, parks, golf courses, cemeteries, etc.) - Good (>75% grass cover)
CN_{POST} = 74
User Composite post development CN:

Entering a calculated composite CN will override selections made from the pull down menus above.

$V_{Hydromod}$: 66.26 ft^3

Reset Hydromod Inputs | Display "Hydromod" calculation worksheet | Calculate Results

BMP Sizing Tool: Hydromodification Control Requirement

BMP Depth:
- Measured from ground surface WITHOUT perforrated pipe.
- Measured from bottom of perforated pipe if installed.

	BMP Volume Below Ground		Ponded Water Above Ground	
Imported BMP Soil Porosity:	0.35			
Depth:	1.00	ft	0.00	ft
Width:		ft	0.00	ft
Length:		ft	0.00	ft

-- OR -- ***Entering an Area information will override Width & Length information!***

Area BMP: 190.00 ft^2 Ponded Area: 0.00 ft^2

Total Volume achieved in BMP: 66.50 ft^3

The above and below ground Depth, Width, and Length or Areas will be summed together for the Percent of Requirement Achieved calculation.

Percent of Requirement Achieved: 100.36 %
Results must be at least 100%

Reset Hydromod Sizing Inputs | Display "Hydromod Sizing" calculation worksheet | Calculate Results

Select Hydromodification BMP Design when Saving? ☐ Yes

100% Treatment

If User Composite C_{POST} and or $I_{historical}$ are used, supporting calculations are required to be submitted.

$A_{Reduced}$: 34,332.0 ft^2
Post development surface: Concrete
C_{POST}: 0.80
User Composite post development C_{POST}:

-- OR -- ***Entering a calculated CPOST will override selection made from the pull down menu.***

Treatment Factor (Tf): 1.5 Calculated
$I_{Design\ Storm}$: 0.20 in./hr. Default Value

-- OR -- ***Entering $I_{Historical}$ will override $I_{Design\ Storm}$ and set Tf to 2x***

$I_{Historical}$: in./hr.

$Q_{TREATMENT}$= 0.1892 cfs

Reset Treatment Inputs | Display "100% Treatment" calculation worksheet | Calculate Results

BMP Sizing Tool: 100% Treatment
Horizontal Flows - Swales

Calculated Swale Flow Depth = 0.0507 ft
Vsw = 1.7804 ft/s
Q Calculated Design Flow = 0.1897 cfs

Swale Side Slope (H / V): 2.00 ft./ft. (2:1 Max Slope)
Swale Bed Width: 2.00 ft. (2-7 foot width)
Longitudinal Swale Slope, %: 1.0% (8% Maximum Slope)
Manning Roughness Coefficient for Sheet Flow: Smooth surfaces; Concrete, Asphalt, Gravel, or Bare Soil
Manning's n: 0.011
Grass Height: 3.0 Inches
Swale Input Flow Characteristics: 90% or more of flow enters upstream end
Minimum required contact time: 5 Minutes
Design Swale Length: 0.0 ft

Percent of Treatment Requirement Achieved: 0.0 %
Results must be at least 100%

STORM WATER CALCULATOR

Gravenstein Hwy 116
Gravenstein and Alder
MFKessler
11/7/2023

Reset Treatment Sizing Inputs | Display "Horizontal Flow Sizing" calculation worksheet | Calculate Results

Select 100% Flow Base Treatment Horizontal BMP Design Requirements when Saving? ☐ Yes

BMP Sizing Tool: 100% Treatment
Vertical Flow - Planter Boxes

Infiltration rate of the specified BMP soil, k: 0.00 in./hr.

Q Calculated Design Flow = 0.0000 cfs

Depth of drainage pipe: 1.50 ft (1.5 ft. minimum)
BMP Length: 0.0 ft
BMP Width: 0.0 ft

Percent of Requirement Achieved: 0.0 %
Results must be at least 100%

Reset Vertical Sizing Inputs | Display "Vertical Flow Sizing" calculation worksheet | Calculate Results

Select 100% Flow Base Treatment Vertical BMP Design Requirements when Saving? ☐ Yes

Delta Volume Capture; V_{delta}

If User Composite CN is used, Supporting calculations are required to be submitted.

Hydrologic soil type within tributary area: C: 0.05 - 0.15 in/hr infiltration (transmission) rate
Predevelopment ground cover description: Open Space (lawns, parks, golf courses, cemeteries, etc.) - Poor (<50% grass cover)
Post development ground cover description: Residential - 1/8 acre or less (town houses)
CN_{PRE} = 86
CN_{POST} = 90
User Composite Predevelopment CN:
User Composite Post development CN:

User Cells must be blank to use CN_{PRE} OR CN_{POST} from drop down lists.

-- OR -- *Entering a calculated composite CN_{PRE} 0r CN_{POST} will override selections made from the pull down menus above.*

V_{DELTA}= 353.276 ft^3

Reset VDelta Inputs | Display "Delta Volume Capture" calculation | Calculate Results

BMP Sizing Tool: Delta Volume Capture Requirement

BMP Depth:
- Measured from ground surface WITHOUT perforated pipe.
- Measured from bottom of perforated pipe if installed.

	BMP Volume Below Ground		Ponded Water Area Above Ground	
Imported BMP Soil Porosity:	0.35			
Depth:	1.0	ft	0.00	ft
Width:		ft	0.0	ft
Length:		ft	0.0	ft
Area BMP:	1010	ft^2	0	ft^2

-- OR -- **Entering Area number will override Width & Length information!**

Total Volume for calculation: 1,010.00 ft^3

The above and below ground Depth, Width, and Length or Areas will be summed together for the Percent of Requirement Achieved calculation.

Percent of Requirement Achieved: 100.06 %
Results must be at least 100%

Reset VDelta BMP Sizing Inputs | Display "VDelta BMP Sizing" calculation worksheet | Calculate Results

Select Delta Volume Capture BMP Design Requirements when Saving? ☑ Yes

Clear/Reset All Inputs | Calculate All | Save BMP Data and Results

STORM WATER CALCULATOR

CN Composite Work Sheet

Project: Gravenstein Hwy 116
Address/Location: Gravenstein and Alder
Designer: MFKessler
Date: November 7, 2023

Inlet Number/Tributary Area/BMP: 3

INSTRUCTIONS: Please refer to the "Urban Hydrology for Small Watersheds" (TR-55 manual).

Soil Type (Infiltration Rate)	Cover Description	CN	Area ft^2	Product of CN x Area
D: 0 - 0.05 in/hr infiltration (transmission) rate	Urban districts - Commercial and business	95	34332	3,261,540.0
No Entry	No Entry	0	0	0.0
No Entry	No Entry	0	0	0.0
No Entry	No Entry	0	0	0.0
No Entry	No Entry	0	0	0.0
No Entry	No Entry	0	0	0.0
No Entry	No Entry	0	0	0.0
No Entry	No Entry	0	0	0.0
No Entry	No Entry	0	0	0.0
No Entry	No Entry	0	0	0.0
		Totals =	34332	3,261,540.0

$$CN_{COMPOSIT} = \frac{(CN \times Area) + (CN \times Area) + (CN \times Area) + (CN \times Area) \ldots}{\text{Total Tributary Area}} =$$

Use this $CN_{COMPOSIT}$ = 95.0

STORM WATER CALCULATOR

C Factor Composite Work Sheet

Project:	Gravenstein Hwy 116
Address/Location:	Gravenstein and Alder
Designer:	MFKessler
Date:	November 7, 2023
Inlet Number/Tributary Area/BMP:	3

INSTRUCTIONS: From "Using Site Design to Meet Development Standards For Storm water Quality" by the Bay Area Storm water Management Agencies Association (BASMAA).

Paving Surface	C Number	Area ft^2	Product of C x Area
Asphalt	0.70	2,000	1,400.00
Crushed Aggregate	0.10	1,000	100.00
No Entry	-	-	-
No Entry	-	-	-
No Entry	-	-	-
No Entry	-	-	-
No Entry	-	-	-
No Entry	-	-	-
No Entry	-	-	-
No Entry	-	-	-
	Totals	3,000.00	1,500.00

$$C_{FACTOR\ COMPOSIT} = \frac{(C \times Area) + (C \times Area) + (C \times Area) + (C \times Area) \ldots}{\text{Total Tributary Area}} = C_{FACTOR\ COMPOSIT} = \boxed{0.50}$$

Attachment 3. Soils

United States Department of Agriculture

Natural Resources Conservation Service

A product of the National Cooperative Soil Survey, a joint effort of the United States Department of Agriculture and other Federal agencies, State agencies including the Agricultural Experiment Stations, and local participants

Custom Soil Resource Report for Sonoma County, California

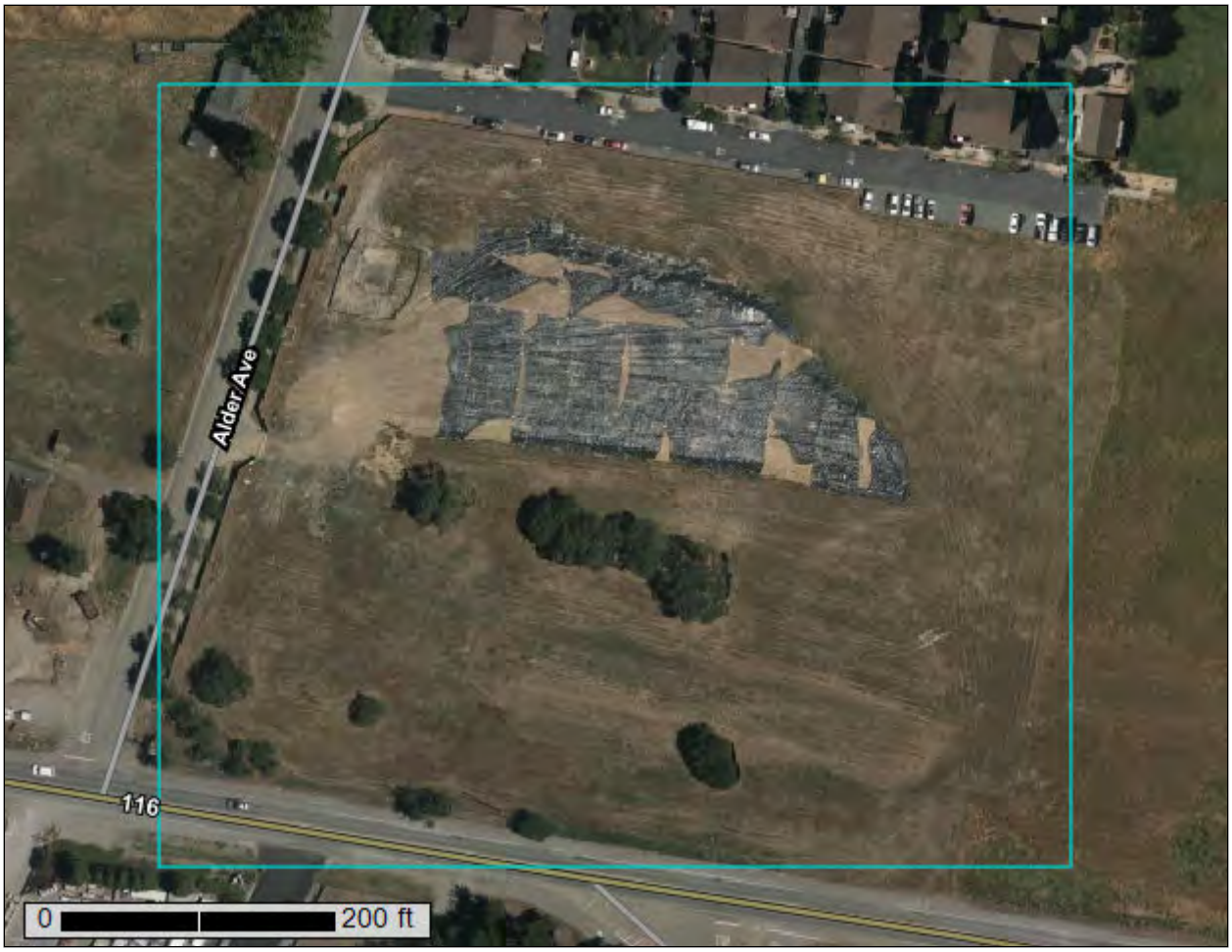

November 16, 2021

Preface

Soil surveys contain information that affects land use planning in survey areas. They highlight soil limitations that affect various land uses and provide information about the properties of the soils in the survey areas. Soil surveys are designed for many different users, including farmers, ranchers, foresters, agronomists, urban planners, community officials, engineers, developers, builders, and home buyers. Also, conservationists, teachers, students, and specialists in recreation, waste disposal, and pollution control can use the surveys to help them understand, protect, or enhance the environment.

Various land use regulations of Federal, State, and local governments may impose special restrictions on land use or land treatment. Soil surveys identify soil properties that are used in making various land use or land treatment decisions. The information is intended to help the land users identify and reduce the effects of soil limitations on various land uses. The landowner or user is responsible for identifying and complying with existing laws and regulations.

Although soil survey information can be used for general farm, local, and wider area planning, onsite investigation is needed to supplement this information in some cases. Examples include soil quality assessments (http://www.nrcs.usda.gov/wps/portal/nrcs/main/soils/health/) and certain conservation and engineering applications. For more detailed information, contact your local USDA Service Center (https://offices.sc.egov.usda.gov/locator/app?agency=nrcs) or your NRCS State Soil Scientist (http://www.nrcs.usda.gov/wps/portal/nrcs/detail/soils/contactus/?cid=nrcs142p2_053951).

Great differences in soil properties can occur within short distances. Some soils are seasonally wet or subject to flooding. Some are too unstable to be used as a foundation for buildings or roads. Clayey or wet soils are poorly suited to use as septic tank absorption fields. A high water table makes a soil poorly suited to basements or underground installations.

The National Cooperative Soil Survey is a joint effort of the United States Department of Agriculture and other Federal agencies, State agencies including the Agricultural Experiment Stations, and local agencies. The Natural Resources Conservation Service (NRCS) has leadership for the Federal part of the National Cooperative Soil Survey.

Information about soils is updated periodically. Updated information is available through the NRCS Web Soil Survey, the site for official soil survey information.

The U.S. Department of Agriculture (USDA) prohibits discrimination in all its programs and activities on the basis of race, color, national origin, age, disability, and where applicable, sex, marital status, familial status, parental status, religion, sexual orientation, genetic information, political beliefs, reprisal, or because all or a part of an individual's income is derived from any public assistance program. (Not all prohibited bases apply to all programs.) Persons with disabilities who require

alternative means for communication of program information (Braille, large print, audiotape, etc.) should contact USDA's TARGET Center at (202) 720-2600 (voice and TDD). To file a complaint of discrimination, write to USDA, Director, Office of Civil Rights, 1400 Independence Avenue, S.W., Washington, D.C. 20250-9410 or call (800) 795-3272 (voice) or (202) 720-6382 (TDD). USDA is an equal opportunity provider and employer.

Contents

Preface..... 2
How Soil Surveys Are Made..... 5
Soil Map..... 8
Soil Map..... 9
Legend..... 10
Map Unit Legend..... 11
Map Unit Descriptions..... 11
Sonoma County, California..... 13
HaB—Haire fine sandy loam, hummocky, 0 to 5 percent slopes..... 13
References..... 15

How Soil Surveys Are Made

Soil surveys are made to provide information about the soils and miscellaneous areas in a specific area. They include a description of the soils and miscellaneous areas and their location on the landscape and tables that show soil properties and limitations affecting various uses. Soil scientists observed the steepness, length, and shape of the slopes; the general pattern of drainage; the kinds of crops and native plants; and the kinds of bedrock. They observed and described many soil profiles. A soil profile is the sequence of natural layers, or horizons, in a soil. The profile extends from the surface down into the unconsolidated material in which the soil formed or from the surface down to bedrock. The unconsolidated material is devoid of roots and other living organisms and has not been changed by other biological activity.

Currently, soils are mapped according to the boundaries of major land resource areas (MLRAs). MLRAs are geographically associated land resource units that share common characteristics related to physiography, geology, climate, water resources, soils, biological resources, and land uses (USDA, 2006). Soil survey areas typically consist of parts of one or more MLRA.

The soils and miscellaneous areas in a survey area occur in an orderly pattern that is related to the geology, landforms, relief, climate, and natural vegetation of the area. Each kind of soil and miscellaneous area is associated with a particular kind of landform or with a segment of the landform. By observing the soils and miscellaneous areas in the survey area and relating their position to specific segments of the landform, a soil scientist develops a concept, or model, of how they were formed. Thus, during mapping, this model enables the soil scientist to predict with a considerable degree of accuracy the kind of soil or miscellaneous area at a specific location on the landscape.

Commonly, individual soils on the landscape merge into one another as their characteristics gradually change. To construct an accurate soil map, however, soil scientists must determine the boundaries between the soils. They can observe only a limited number of soil profiles. Nevertheless, these observations, supplemented by an understanding of the soil-vegetation-landscape relationship, are sufficient to verify predictions of the kinds of soil in an area and to determine the boundaries.

Soil scientists recorded the characteristics of the soil profiles that they studied. They noted soil color, texture, size and shape of soil aggregates, kind and amount of rock fragments, distribution of plant roots, reaction, and other features that enable them to identify soils. After describing the soils in the survey area and determining their properties, the soil scientists assigned the soils to taxonomic classes (units). Taxonomic classes are concepts. Each taxonomic class has a set of soil characteristics with precisely defined limits. The classes are used as a basis for comparison to classify soils systematically. Soil taxonomy, the system of taxonomic classification used in the United States, is based mainly on the kind and character of soil properties and the arrangement of horizons within the profile. After the soil

scientists classified and named the soils in the survey area, they compared the individual soils with similar soils in the same taxonomic class in other areas so that they could confirm data and assemble additional data based on experience and research.

The objective of soil mapping is not to delineate pure map unit components; the objective is to separate the landscape into landforms or landform segments that have similar use and management requirements. Each map unit is defined by a unique combination of soil components and/or miscellaneous areas in predictable proportions. Some components may be highly contrasting to the other components of the map unit. The presence of minor components in a map unit in no way diminishes the usefulness or accuracy of the data. The delineation of such landforms and landform segments on the map provides sufficient information for the development of resource plans. If intensive use of small areas is planned, onsite investigation is needed to define and locate the soils and miscellaneous areas.

Soil scientists make many field observations in the process of producing a soil map. The frequency of observation is dependent upon several factors, including scale of mapping, intensity of mapping, design of map units, complexity of the landscape, and experience of the soil scientist. Observations are made to test and refine the soil-landscape model and predictions and to verify the classification of the soils at specific locations. Once the soil-landscape model is refined, a significantly smaller number of measurements of individual soil properties are made and recorded. These measurements may include field measurements, such as those for color, depth to bedrock, and texture, and laboratory measurements, such as those for content of sand, silt, clay, salt, and other components. Properties of each soil typically vary from one point to another across the landscape.

Observations for map unit components are aggregated to develop ranges of characteristics for the components. The aggregated values are presented. Direct measurements do not exist for every property presented for every map unit component. Values for some properties are estimated from combinations of other properties.

While a soil survey is in progress, samples of some of the soils in the area generally are collected for laboratory analyses and for engineering tests. Soil scientists interpret the data from these analyses and tests as well as the field-observed characteristics and the soil properties to determine the expected behavior of the soils under different uses. Interpretations for all of the soils are field tested through observation of the soils in different uses and under different levels of management. Some interpretations are modified to fit local conditions, and some new interpretations are developed to meet local needs. Data are assembled from other sources, such as research information, production records, and field experience of specialists. For example, data on crop yields under defined levels of management are assembled from farm records and from field or plot experiments on the same kinds of soil.

Predictions about soil behavior are based not only on soil properties but also on such variables as climate and biological activity. Soil conditions are predictable over long periods of time, but they are not predictable from year to year. For example, soil scientists can predict with a fairly high degree of accuracy that a given soil will have a high water table within certain depths in most years, but they cannot predict that a high water table will always be at a specific level in the soil on a specific date.

After soil scientists located and identified the significant natural bodies of soil in the survey area, they drew the boundaries of these bodies on aerial photographs and

identified each as a specific map unit. Aerial photographs show trees, buildings, fields, roads, and rivers, all of which help in locating boundaries accurately.

Soil Map

The soil map section includes the soil map for the defined area of interest, a list of soil map units on the map and extent of each map unit, and cartographic symbols displayed on the map. Also presented are various metadata about data used to produce the map, and a description of each soil map unit.

Custom Soil Resource Report
Soil Map

MAP LEGEND

Area of Interest (AOI)

- Area of Interest (AOI)

Soils

- Soil Map Unit Polygons
- Soil Map Unit Lines
- Soil Map Unit Points

Special Point Features

- Blowout
- Borrow Pit
- Clay Spot
- Closed Depression
- Gravel Pit
- Gravelly Spot
- Landfill
- Lava Flow
- Marsh or swamp
- Mine or Quarry
- Miscellaneous Water
- Perennial Water
- Rock Outcrop
- Saline Spot
- Sandy Spot
- Severely Eroded Spot
- Sinkhole
- Slide or Slip
- Sodic Spot
- Spoil Area
- Stony Spot
- Very Stony Spot
- Wet Spot
- Other
- Special Line Features

Water Features

- Streams and Canals

Transportation

- Rails
- Interstate Highways
- US Routes
- Major Roads
- Local Roads

Background

- Aerial Photography

MAP INFORMATION

The soil surveys that comprise your AOI were mapped at 1:20,000.

Warning: Soil Map may not be valid at this scale.

Enlargement of maps beyond the scale of mapping can cause misunderstanding of the detail of mapping and accuracy of soil line placement. The maps do not show the small areas of contrasting soils that could have been shown at a more detailed scale.

Please rely on the bar scale on each map sheet for map measurements.

Source of Map: Natural Resources Conservation Service
Web Soil Survey URL:
Coordinate System: Web Mercator (EPSG:3857)

Maps from the Web Soil Survey are based on the Web Mercator projection, which preserves direction and shape but distorts distance and area. A projection that preserves area, such as the Albers equal-area conic projection, should be used if more accurate calculations of distance or area are required.

This product is generated from the USDA-NRCS certified data as of the version date(s) listed below.

Soil Survey Area: Sonoma County, California
Survey Area Data: Version 15, Sep 10, 2021

Soil map units are labeled (as space allows) for map scales 1:50,000 or larger.

Date(s) aerial images were photographed: Jun 1, 2020—Jun 5, 2020

The orthophoto or other base map on which the soil lines were compiled and digitized probably differs from the background imagery displayed on these maps. As a result, some minor shifting of map unit boundaries may be evident.

Map Unit Legend

Map Unit Symbol	Map Unit Name	Acres in AOI	Percent of AOI
HaB	Haire fine sandy loam, hummocky, 0 to 5 percent slopes	8.6	100.0%
Totals for Area of Interest		**8.6**	**100.0%**

Map Unit Descriptions

The map units delineated on the detailed soil maps in a soil survey represent the soils or miscellaneous areas in the survey area. The map unit descriptions, along with the maps, can be used to determine the composition and properties of a unit.

A map unit delineation on a soil map represents an area dominated by one or more major kinds of soil or miscellaneous areas. A map unit is identified and named according to the taxonomic classification of the dominant soils. Within a taxonomic class there are precisely defined limits for the properties of the soils. On the landscape, however, the soils are natural phenomena, and they have the characteristic variability of all natural phenomena. Thus, the range of some observed properties may extend beyond the limits defined for a taxonomic class. Areas of soils of a single taxonomic class rarely, if ever, can be mapped without including areas of other taxonomic classes. Consequently, every map unit is made up of the soils or miscellaneous areas for which it is named and some minor components that belong to taxonomic classes other than those of the major soils.

Most minor soils have properties similar to those of the dominant soil or soils in the map unit, and thus they do not affect use and management. These are called noncontrasting, or similar, components. They may or may not be mentioned in a particular map unit description. Other minor components, however, have properties and behavioral characteristics divergent enough to affect use or to require different management. These are called contrasting, or dissimilar, components. They generally are in small areas and could not be mapped separately because of the scale used. Some small areas of strongly contrasting soils or miscellaneous areas are identified by a special symbol on the maps. If included in the database for a given area, the contrasting minor components are identified in the map unit descriptions along with some characteristics of each. A few areas of minor components may not have been observed, and consequently they are not mentioned in the descriptions, especially where the pattern was so complex that it was impractical to make enough observations to identify all the soils and miscellaneous areas on the landscape.

The presence of minor components in a map unit in no way diminishes the usefulness or accuracy of the data. The objective of mapping is not to delineate pure taxonomic classes but rather to separate the landscape into landforms or landform segments that have similar use and management requirements. The delineation of such segments on the map provides sufficient information for the development of resource plans. If intensive use of small areas is planned, however,

onsite investigation is needed to define and locate the soils and miscellaneous areas.

An identifying symbol precedes the map unit name in the map unit descriptions. Each description includes general facts about the unit and gives important soil properties and qualities.

Soils that have profiles that are almost alike make up a *soil series*. Except for differences in texture of the surface layer, all the soils of a series have major horizons that are similar in composition, thickness, and arrangement.

Soils of one series can differ in texture of the surface layer, slope, stoniness, salinity, degree of erosion, and other characteristics that affect their use. On the basis of such differences, a soil series is divided into *soil phases*. Most of the areas shown on the detailed soil maps are phases of soil series. The name of a soil phase commonly indicates a feature that affects use or management. For example, Alpha silt loam, 0 to 2 percent slopes, is a phase of the Alpha series.

Some map units are made up of two or more major soils or miscellaneous areas. These map units are complexes, associations, or undifferentiated groups.

A *complex* consists of two or more soils or miscellaneous areas in such an intricate pattern or in such small areas that they cannot be shown separately on the maps. The pattern and proportion of the soils or miscellaneous areas are somewhat similar in all areas. Alpha-Beta complex, 0 to 6 percent slopes, is an example.

An *association* is made up of two or more geographically associated soils or miscellaneous areas that are shown as one unit on the maps. Because of present or anticipated uses of the map units in the survey area, it was not considered practical or necessary to map the soils or miscellaneous areas separately. The pattern and relative proportion of the soils or miscellaneous areas are somewhat similar. Alpha-Beta association, 0 to 2 percent slopes, is an example.

An *undifferentiated group* is made up of two or more soils or miscellaneous areas that could be mapped individually but are mapped as one unit because similar interpretations can be made for use and management. The pattern and proportion of the soils or miscellaneous areas in a mapped area are not uniform. An area can be made up of only one of the major soils or miscellaneous areas, or it can be made up of all of them. Alpha and Beta soils, 0 to 2 percent slopes, is an example.

Some surveys include *miscellaneous areas*. Such areas have little or no soil material and support little or no vegetation. Rock outcrop is an example.

Sonoma County, California

HaB—Haire fine sandy loam, hummocky, 0 to 5 percent slopes

Map Unit Setting

National map unit symbol: hfdm
Elevation: 20 to 2,400 feet
Mean annual precipitation: 30 inches
Mean annual air temperature: 57 degrees F
Frost-free period: 200 to 300 days
Farmland classification: Farmland of statewide importance

Map Unit Composition

Haire and similar soils: 85 percent
Minor components: 15 percent
Estimates are based on observations, descriptions, and transects of the mapunit.

Description of Haire

Setting

Landform: Terraces
Landform position (two-dimensional): Footslope
Landform position (three-dimensional): Base slope
Down-slope shape: Linear
Across-slope shape: Linear
Parent material: Alluvium derived from sedimentary rock

Typical profile

H1 - 0 to 20 inches: fine sandy loam
H2 - 20 to 36 inches: clay
H3 - 36 to 60 inches: very cobbly clay loam

Properties and qualities

Slope: 0 to 5 percent
Depth to restrictive feature: More than 80 inches
Drainage class: Moderately well drained
Runoff class: Medium
Capacity of the most limiting layer to transmit water (Ksat): Moderately low to moderately high (0.06 to 0.20 in/hr)
Depth to water table: More than 80 inches
Frequency of flooding: None
Frequency of ponding: None
Available water supply, 0 to 60 inches: Moderate (about 6.4 inches)

Interpretive groups

Land capability classification (irrigated): 3e
Land capability classification (nonirrigated): 3e
Hydrologic Soil Group: C
Ecological site: R014XG912CA - Loamy Terrace
Hydric soil rating: No

Minor Components

Zamora

Percent of map unit: 10 percent
Hydric soil rating: No

Clear lake

Percent of map unit: 5 percent
Landform: Depressions
Hydric soil rating: Yes

References

American Association of State Highway and Transportation Officials (AASHTO). 2004. Standard specifications for transportation materials and methods of sampling and testing. 24th edition.

American Society for Testing and Materials (ASTM). 2005. Standard classification of soils for engineering purposes. ASTM Standard D2487-00.

Cowardin, L.M., V. Carter, F.C. Golet, and E.T. LaRoe. 1979. Classification of wetlands and deep-water habitats of the United States. U.S. Fish and Wildlife Service FWS/OBS-79/31.

Federal Register. July 13, 1994. Changes in hydric soils of the United States.

Federal Register. September 18, 2002. Hydric soils of the United States.

Hurt, G.W., and L.M. Vasilas, editors. Version 6.0, 2006. Field indicators of hydric soils in the United States.

National Research Council. 1995. Wetlands: Characteristics and boundaries.

Soil Survey Division Staff. 1993. Soil survey manual. Soil Conservation Service. U.S. Department of Agriculture Handbook 18. http://www.nrcs.usda.gov/wps/portal/nrcs/detail/national/soils/?cid=nrcs142p2_054262

Soil Survey Staff. 1999. Soil taxonomy: A basic system of soil classification for making and interpreting soil surveys. 2nd edition. Natural Resources Conservation Service, U.S. Department of Agriculture Handbook 436. http://www.nrcs.usda.gov/wps/portal/nrcs/detail/national/soils/?cid=nrcs142p2_053577

Soil Survey Staff. 2010. Keys to soil taxonomy. 11th edition. U.S. Department of Agriculture, Natural Resources Conservation Service. http://www.nrcs.usda.gov/wps/portal/nrcs/detail/national/soils/?cid=nrcs142p2_053580

Tiner, R.W., Jr. 1985. Wetlands of Delaware. U.S. Fish and Wildlife Service and Delaware Department of Natural Resources and Environmental Control, Wetlands Section.

United States Army Corps of Engineers, Environmental Laboratory. 1987. Corps of Engineers wetlands delineation manual. Waterways Experiment Station Technical Report Y-87-1.

United States Department of Agriculture, Natural Resources Conservation Service. National forestry manual. http://www.nrcs.usda.gov/wps/portal/nrcs/detail/soils/home/?cid=nrcs142p2_053374

United States Department of Agriculture, Natural Resources Conservation Service. National range and pasture handbook. http://www.nrcs.usda.gov/wps/portal/nrcs/detail/national/landuse/rangepasture/?cid=stelprdb1043084

United States Department of Agriculture, Natural Resources Conservation Service. National soil survey handbook, title 430-VI. http://www.nrcs.usda.gov/wps/portal/nrcs/detail/soils/scientists/?cid=nrcs142p2_054242

United States Department of Agriculture, Natural Resources Conservation Service. 2006. Land resource regions and major land resource areas of the United States, the Caribbean, and the Pacific Basin. U.S. Department of Agriculture Handbook 296. http://www.nrcs.usda.gov/wps/portal/nrcs/detail/national/soils/?cid=nrcs142p2_053624

United States Department of Agriculture, Soil Conservation Service. 1961. Land capability classification. U.S. Department of Agriculture Handbook 210. http://www.nrcs.usda.gov/Internet/FSE_DOCUMENTS/nrcs142p2_052290.pdf

Attachment 4. Educational Materials

VEGETATED SWALE

Also know as: Bioretention Swale, Treatment Swale, and Grassy Swale

DESCRIPTION

The swale best management practice (BMP) functions as a soil and plant-based filtration and infiltration feature that removes pollutants through a variety of natural physical, biological, and chemical treatment processes. Vegetated swales are open, shallow channels with vegetation covering the side slopes and bottom that collect and slowly convey runoff flow to downstream discharge points. They are designed to treat runoff through filtering by the vegetation in the channel, filtering through a subsoil matrix, and/or infiltration into the underlying soils. They trap particulate pollutants (suspended solids and trace metals), promote infiltration, and reduce the flow velocity of storm water runoff. Vegetated swales can serve as part of a storm water drainage system and can replace curbs, gutters and storm sewer systems.

ADVANTAGES

- Can be designed to achieve Treatment, Delta Volume Capture, or Hydromodification requirements.

- Enhances water quality of downstream water bodies through natural processes.
- Aesthetically pleasing.
- The vegetation reduces heat island effects and improves an area's landscape.
- Vegetated swales can be designed to convey high flow as well as water quality flow.

LIMITATIONS

- A thick vegetative cover is needed for these practices to function properly.
- Swales are more susceptible to failure if not properly maintained than other treatment BMPs.
- Can be difficult to avoid channelization, which may cause erosion and limit infiltration potential.
- Not effective and may even erode when flow velocities are high, if the grass cover is not properly maintained.
- May not be appropriate for industrial sites or locations where spills may occur.
- Grassed swales cannot treat a very large drainage area. Large areas may be divided and treated using multiple swales.
- Should not be used in areas of know contamination. If soil and/or groundwater contamination is present on the site or within a 100’ radius of the proposed BMP location, the North Coast Regional Water Quality Control Board will need to be contacted and the site reviewed.
- Should not be used in areas of slope instability where infiltrated storm water may cause failure. Slope stability should be determined by a licensed geotechnical engineer.
- Do not use in locations that can negatively impact building foundation or footings. Location shall be approved by a licensed Geotechnical Engineer.

KEY DESIGN FEATURES

- The longest flow path for the swale shall have a minimum retention time of 12 minutes for conditions when the treatment flows enter the Vegetated Swale uniformly along the swale length. The longest flow path for the swale shall have a minimum retention time of 8 minutes if 90 percent or more of the treatment flow enters the swale at the upstream end.
- Swale should be designed so that the water level does not exceed 2/3rds the height of the grass or 4 inches, whichever is less, at the design treatment rate.
- Longitudinal slopes between 1% and 2.5% are recommended.
- Maximum allowable slope is 8% slope. In steep areas, check dams up to 24-inches high and at least 25 feet apart are allowed.
- Trapezoidal channels are normally recommended but other configurations, such as parabolic, can also provide substantial water quality improvement and may be easier to mow than designs with sharp breaks in slope.

- Swales constructed in cut are preferred, or in fill areas that are far enough from an adjacent slope to minimize the potential for gopher damage. Do not use side slopes constructed of fill, which are prone to structural damage by gophers and other burrowing animals.
- Shall be planted with plants from the approved **Plant List** and **Tree List** included in Appendix F and shall be planted to achieve 51% cover.
- Vegetated swales shall have a maximum treatment width of 10 feet. The vegetated swale bed shall be at least 2-feet wide and no more than 7-feet wide. Parallel swales may be used if calculations show greater width is needed.
- The bed of the swale flow area shall slope at about 2% from toe of side slope to center of swale. Side slopes shall be no greater than a 2 to 1 slope.
- If vegetation is not established prior to rain, additional soil stabilization methods may be necessary.
- If the 10 or 100-year storm event flow velocity is greater than 4 feet per second, a permanent geofabric liner shall be used that is rated for the calculated flow velocity.
- If used, the perforated pipe trench shall be backfilled with ¾" crushed rock with a 2-inch bed underneath and 6-inch cover.

SIZING DESIGN- GOAL AND REQUIREMENTS

- **For all projects:** The treatment component requires that all of the runoff generated by this water quality design storm from impermeable surfaces must be treated on site for the pollutants of concern.
- ***For projects that increase the amount of impervious surface, but create or replace less than a total of one acre:*** The **Delta Volume Capture** component requires that any increase in volume due to development for the water quality design storm must be infiltrated and/or reused on site. Further discussion of the Treatment and Delta Volume Capture requirements and the accompanying formulas can be found in Chapter 6.
- ***For projects that create or replace one acre or more of impervious surface*:** These larger projects must mitigate their impacts by meeting the **Hydromodification Requirement** by capturing 100% of the post development volume generated by the water quality rain event.
- All calculations shall be completed using the "Storm Water Calculator" available at www.srcity.org/stormwaterLID.

INSPECTION AND MAINTENANCE REQUIREMENTS

A maintenance plan shall be provided with the Final SWLID Submittal. The maintenance plan shall include recommended maintenance practices, state the parties responsible for maintenance and upkeep, specify the funding source for ongoing maintenance with provisions for full replacement when necessary and provide site specific inspection checklist.

At a minimum maintenance shall include the following:

- Mow and irrigate during dry weather to the extent necessary to keep vegetation alive. Where 6-inch high grasses are used, the grass height shall be at least 3 inches after mowing. Where mowed grasses are shown, the grass height shall be mowed when the height exceeds 3 inches.
- Remove obstructions and trash from vegetated swale.
- Pesticides and fertilizers shall not be used in the swale.

Vegetated Swales shall be inspected and maintained monthly during the rainy season to review:

- Obstructions and trash.
- Ponded flow is drained within 72 hours after a rainfall event.
- Condition of grasses.
- If ponding is observed, grading will be required to restore positive drainage.

Attachment 5. Operations & Maintenance Plan

RECORDING REQUESTED BY AND WHEN RECORDED MAIL TO:

City of Cotati
Department of Public Works/Engineering
201 West Sierra Avenue
Cotati, California 94931
Attn: [Name]

Property: [ADDRESS], Cotati, California
APN: [000-000-000]

MAINTENANCE AND MONITORING AGREEMENT AND DECLARATION OF COVENANTS REGARDING STORM WATER BMP FACILITIES

THIS AGREEMENT is made and entered into this [DATE] (Effective Date), by and between [NAME] (Developer), and City of Cotati (City).

RECITALS

A. The North Coast Regional Water Quality Control Board NPDES Permit, Order Number R1-2009-0050 ("NPDES Permit"), requires that the City shall require that all new development and redevelopment projects subject to post-construction Best Management Practices ("BMP") requirements provide for maintenance of BMPs by way of legally binding maintenance agreements and/or other equivalent measures.

B. The NPDES Permit further requires that BMP maintenance agreements shall ensure that the BMPs implemented will remain fully functional, and that all areas identified for treatment and/or volume capture will discharge to the treatment BMP system as identified and approved.

C. The NPDES Permit further specifically requires: (i) Developer's signed statement accepting responsibility for maintenance of BMPs until the responsibility is legally transferred; (ii) written conditions in any sales or lease agreement, in enough detail to be easily understood by the future owner or tenant, that require the property owner or tenant to assume responsibility for BMP maintenance and conduct a maintenance inspection at least once a year; and (iii) that the City notify the Regional Water Board and commence progressive enforcement against the owner or operator where necessary to rectify failure to implement and maintain post-construction BMPs.

D. The Storm Water Low Impact Development Technical Design Manual ("LID Manual") adopted by the City and City of Santa Rosa further requires a legally binding, signed maintenance agreement or equivalent mechanism for all BMPs located on private property.

E. The LID Manual requires that maintenance agreements shall legally assign maintenance responsibility to the property owner; shall be recorded among the deed records at the City Recorder's Office so they will run with the title to the land; and shall be included in any future sales and/or lease agreements.

F. The LID Manual further requires that the funding of all inspection, maintenance,

and replacement of BMPs on private land is the sole responsibility of the property owner, and that annual inspections and maintenance and any corrective actions, repairs, or replacements shall be documented, retained for at least five years, and made available to the City upon request.

G. Developer is the owner of certain real property described in Exhibit A, attached hereto and incorporated as though fully set forth herein ("Property").

H. City has approved a project on the Property consisting of the subdivision of the Property and the [WORK DESCRIPTION AND PERMIT NUMBER] ("Project"), subject to conditions of approval and the requirements of the Project proposal statement.

I. The Project includes a final Storm Water Mitigation Plan (SWMP) that has been submitted, reviewed, and approved, and that includes provisions for the construction of BMPs identified in Exhibit B, attached hereto and incorporated as though fully set forth herein.

J. The SWMP identifies post-construction storm water management BMPs, assigns monitoring and maintenance responsibility to the project owner, and includes Inspection and Maintenance Checklists that identify when and how BMPs will be inspected, when maintenance will be required, and how maintenance has or will be conducted.

K. [USE THIS RECITAL IF TRANSFER TO HOA] xyz.

L. [USE THIS RECITAL IF TRANSFER TO INDIVIDUAL PROPERTY OWNERS] xyz.

M. [USE THE FOLLOWING TWO RECITALS IF TRANSFER TO BOTH HOA AND INDIVIDUAL PROPERTY OWNER] xyz.

a. WHEREAS, [alternatives—HOA/Individual Property Owners/Both] . . .

AGREEMENT

NOW, THEREFORE, in consideration of the foregoing recitals, the mutual covenants contained herein, and the following terms and conditions, the parties agree as follows:

1. Responsibility for Installation, Operation, and Maintenance. Developer shall, at its sole cost and expense, construct, inspect, and maintain the BMPs in accordance with the conditions of approval and SWMP specifications.

2. Developer shall ensure the BMPs remain fully functional and in good working condition as determined solely by the City, and that all areas identified for treatment discharge to the treatment BMP system.

3. Developer accepts sole responsibility for all inspection, maintenance, remediation, and replacement of the BMPs.

4. These responsibilities run with the land, and shall transfer to the new owner or tenant in the event the Property is sold or leased.

5. Developer will perform inspections and maintenance in accordance with the SWMP. All work shall conform to the requirements of the SWMP, City-identified BMP manuals and handbooks, and specific maintenance requirements established by the manufacturer as approved by the City. Specific manufacturer maintenance requirements for the BMP will be submitted to the City.

6. Developer hereby grants permission to the City and its authorized agents and employees to enter the Property and inspect the storm water management/BMP facilities whenever the City deems necessary. The purpose of the inspection is to assure safe and proper functioning of the facilities, including any berms, inlet and outlet structures, vegetation, infiltration media, pond areas, underground retention areas, and access roads. If deficiencies are noted, City shall notify Developer and provide the inspection findings and requirements to cure the deficiencies.

7. Developer hereby grants permission to City and its authorized agents, employees, and consultants to enter upon the Property to install, operate and maintain equipment to monitor the flow characteristics and pollutant content of the influent, effluent and intermediate points in the facilities. Developer further agrees to design and construct the facility to provide access for monitoring as outlined in the LID manual and/or in the manufacturer manual for the BMP.

8. All records regarding inspections and maintenance shall be retained by Developer for at least five years and made available to the City upon request. These records shall include copies of completed inspection reports and maintenance checklists to document any inspection and maintenance activities that were conducted over the last five years. Any corrective actions, repairs, or replacements shall also be documented and kept in the BMP inspection and maintenance records for a minimum of five years.

9. In the event Developer fails to maintain the storm water management/BMP facilities in good working condition acceptable to City, City may enter upon the Property and take whatever steps it deems reasonably necessary to maintain the storm water management/BMP facilities. This provision shall not be construed to allow City to erect any structure of a permanent nature on the Property outside of an easement in favor of City. It is expressly understood and agreed that City is under no obligation to maintain or repair facilities, and in no event shall this Agreement be construed to impose such an obligation on City.

10. In the event that City, pursuant to this Agreement, performs work of any nature, or expends any funds in the performance of such work for labor, use of equipment, supplies, materials, and the like, due to the failure of Developer to perform such maintenance or work, Developer shall reimburse City within 30 days of receipt of notice of all costs incurred by the City to undertake such work. If Developer fails to reimburse City for these costs within 30 days, City shall have the right to record a lien against the property in the amount of such costs, plus the legal rate of interest for judgments, and may enforce the lien in the same manner a lien for real property taxes may be enforced.

11. Developer shall indemnify, defend and hold harmless City and its employees, officials, and agents, from and against any liability, (including liability for claims, suits, actins arbitration proceedings, administrative proceedings, regulatory proceedings, losses,

expenses or costs of any kind, whether actual, alleged or threatened, interest, defense costs, and expert witness fees), where same results from or arises out of the construction, presence existence, or maintenance of the storm water management/BMP facilities or the performance of this Agreement by Developer, its officers, employees, agents, and sub-contractors, excepting only that resulting from the sole, active negligence or intentional misconduct of City, its employees, officials, or agents. This indemnification obligation is not limited in any way by any limitation on the amount or type of damages or compensation payable to or for Developer or its agents under workers' compensation acts, disability benefits acts or other employees' benefits acts. In the event a claim is asserted against City, its agents or employees', City shall promptly notify landowner. Thereafter, Developer shall defend at it s own expense any suite based upon such claim. If any judgment or claim against the City, its agents or employees', shall be entered, Developer shall pay all costs and expenses in connection therewith.

12. Any violation of the final SWMP or this Agreement by Developer shall be deemed a public nuisance under the Sonoma City Code and the City shall be entitled to the remedies available to it under the Sonoma City Code, in addition to and cumulative of all other remedies, civil or criminal, which may be pursued by the City.

13. Developer shall not assign this Agreement to a third party without the express prior written consent of the City, provided that such consent will not be unreasonably withheld and that such consent shall not be required for Developer to sell or lease the property to a third party.

14. Developer binds itself, its partners, successors, legal representatives and assigns to the City and to the partners, successors, legal representatives and assigns of the City with respect to all promises and agreements contained herein.

15. This Agreement shall be recorded by Developer, and shall: a) constitute a "covenant running with the land;" b) be binding in perpetuity upon Developer and Developer's successors, heirs, and assigns; and, 3) benefit the City of Sonoma, its successors, and assigns. Any breach of this Agreement shall render Developer or Developer's heirs, successors or assigns liable pursuant to the provisions of the Sonoma City Code.

16. All future sales or lease agreements shall include a copy of this Agreement, and written conditions, in enough detail to be easily understood by the future property owner or tenant, that require the property owner or tenant to assume responsibility for BMP maintenance and compliance with this Agreement.

17. If any provisions of the Agreement shall be held to be invalid, illegal or unenforceable, the validity, legality and enforceability of the remaining provision shall not in any way be affected or impaired thereby.

18. This Agreement shall be governed according to the laws of the State of California. Because this Agreement is to be performed in the City of Sonoma, the parties hereto agree that the forum for the adjudication of any dispute regarding the Agreement or enforcement shall be brought exclusively and solely in Sonoma City, California.

19. This Agreement is effective as of the Effective Date identified above.

LANDOWNER:

By: _____
Name: _____
Title: _____

THE CITY OF SONOMA:

By: _____
Name: _____
Title: _____

ATTEST:
By: _____
Name:_____
Title: _____

Attachments:

Exhibit A – Property description
Exhibit B – Location map of BMPs as part of this agreement
Notary Acknowledgment